NUTRILITE
5600 BEACH BLVD
BUENA PARK, CA 90622
WWW.AMWAY.COM

**VIA E-MAIL:** robert.koster@ecy.wa.gov

March 14, 2014

**Mr. Robert Koster**
Regional Air Quality Section
Washington Department of Ecology - Eastern Regional Office
4601 North Monroe Street
Suite 100
Spokane, WA 99205-1295

*RE: Nutrilite – Notice of Construction Application for RWD and Boiler Project at Quincy Facility*

Dear Mr. Koster:

This letter is meant to supplement Amway Nutrilite's December 2013 Notice of Construction (NOC) air permit application by clarifying the overall project scope and emissions.

Nutrilite had previously permitted their greenfield facility under Approval Order 12AQ-E463. Nutrilite added the emergency fire pump and semi works process under approval order no. 13AQ-E524.

In its December 2013 NOC application, Nutrilite applied for an air permit to expand the variety of products produced at the Quincy facility. That application covers the expansion in product varieties, and the addition of a refractance window dryer (RWD) and natural gas boiler.

## Process Description

The RWD and boiler project will add a RWD to dry the materials from the extraction concentration intermediate products. The dryer will be semi-enclosed and will operate under negative air pressure. The RWD will require steam, which will be supplied by an additional 8.37 million British thermal units per hour (MMBtu/hr) natural gas boiler.

The original facility process flow diagram (PFD) as permitted under Approval Order No. 13AQ-E524 is on page 1 in attachment 1. The diagram shows the location where the RWD PFD is introduced into the process. The second page of attachment 1 shows the new RWD process. The exit stream from the Concentrate Hold Tank (T5), as shown in the original PFD, may be routed to two different locations. Either the stream goes to the Mix Tank (MT) shown in the original PFD, or will be routed to the Mix Tank (T100) shown in the new PFD for the RWD. Both streams continue to their final destination as shown in each individual PFD.

NUTRILITE
5600 BEACH BLVD
BUENA PARK, CA 90622
WWW.AMWAY.COM

## Emission Calculations

Table 3-1 of the RWD Application shows the facility wide potential to emit once the RWD project is permitted. The criteria pollutant emission estimates from that table are copied below.

| ID | Source Name | $NO_x$ (tpy) | $SO_2$ (tpy) | $PM_{10}$ (tpy) | $PM_{2.5}$ (tpy) | CO (tpy) | VOC (tpy) |
|---|---|---|---|---|---|---|---|
| 1-2 | Greenfield Facility Boilers | 1.24 | 0.04 | 0.03 | 0.03 | 3.03 | 0.33 |
| 3-9 | Greenfield Facility (without boilers) | 0.29 | 0.0018 | 1.49 | 1.49 | 0.28 | 12.55 |
| 10 | Semi Works Process | -- | -- | -- | -- | -- | 0.07 |
| 11 | Emergency Fire Pump | 0.0098 | -- | 0.0003 | 0.0003 | 0.0035 | 0.0004 |
| 12 | New NG Boiler | 0.62 | 0.02 | 0.02 | 0.02 | 1.27 | 0.20 |
| 13 | New RWD | -- | -- | -- | -- | -- | 1.10 |
| **Totals** | | **2.17** | **0.06** | **1.54** | **1.53** | **4.57** | **14.24** |
| *Exemption Levels* | | *2.0* | *2.0* | *0.75* | *0.5* | *5.0* | *2.0* |

Units with ID 1-9 were permitted as part of the original greenfield facility under Approval Order 12AQ-E463. ID 1-2 (the two natural gas boilers) emission calculations have been updated in the December 2013 application for CO, $PM_{10}$ and $PM_{2.5}$. The emission factors for $PM_{10}$ and $PM_{2.5}$ have been updated based on EPA's National Emission Inventory for natural gas boilers.[1] The CO emission concentration has been updated to agree with permitted emission concentration limits in Approval Order 13AQ-E524.

ID 10 and 11 were permitted under Approval Order 13AQ-E524; there have been no updates to the emission calculations for these units.

ID 12 and 13 are new with the RWD and boiler application. Emissions estimates for this project assume that all fugitive VOC losses are captured within the calculations for the original NOC application. (Fugitive emission calculations for the original greenfield project used a fugitive equipment count that conservatively included an additional 50% of components beyond those estimated in the facility design). Particulate matter emissions associated with this project are discussed below. Note that the only increase in potential $PM_{10}$ and $PM_{2.5}$ emissions from this project is due to the natural gas boiler.

## Particulate Matter Control

Under Approval Order 13AQ-E524, a 7,200 cfm fabric filter was permitted for control of $PM_{10}$ and $PM_{2.5}$. The additional RWD process will include four additional pickup points, (1) RWD Weigh up, (2) RWD Mix Tank, (3) RWD Mill, and (4) RWD Fill room that will be routed to this fabric filter. Attachment 2 includes a dust collection flow diagram, which indicates all points

[1] ftp://ftp.epa.gov/EmisInventory/2011/doc/natgas_procgas_lpg_pm_efs_not_ap42_032012_revisions.xls

NUTRILITE
5600 BEACH BLVD
BUENA PARK, CA 90622
WWW.AMWAY.COM

from which particulate is collected and routed to the fabric filter. The diagram also shows the expected flowrate for each pick-up point. The flowrate table indicates that the total acfm is 6,000 acfm, where the capacity of the fabric filter is 7,200 acfm.

The original greenfield application calculated particulate matter emissions based on the capacity of the fabric filter (i.e., 7,200 cfm). The capacity of the fabric filter has not changed; therefore there is no increase in the potential particulate matter emissions associated with the RWD process. Additionally, attachment 2 includes fabric filter specifications and a guarantee of emissions from the fabric filter. The fabric filter is a Donaldson Torit Powercore CP Model CPC-16 dust collector, serial number 4240624. The filter has a minimum efficiency reporting value of 13 and provides 63 square feet of media per filter. There are 16 filters, providing 1008 square feet total. The emission guarantee provided by Donaldson specifies with an inlet loading of less than 5 grains per dry standard cubic foot (gr/dscf), the maximum average particulate emissions in the discharge gas stream will not exceed 0.005 gr/dscf.

If you have any questions or comments about the information presented in this letter, please do not hesitate to call me at (714) 562-4120 or Beth Beaudry at (253) 867-5600.

Sincerely,

AMWAY NUTRILITE PRODUCTS DIVISION

Ashish Jain
Environmental, Health & Safety

Attachments

cc: Aaron Day, Trinity Consultants (Seattle, WA)
Beth Beaudry, Trinity Consultants (Seattle, WA)
Steve Schappe, Amway Nutrilite Products Division (Buena Park, CA)

# ATTACHMENT 1

## Process Flow Diagrams

DRAWING NO. EC-A-001P

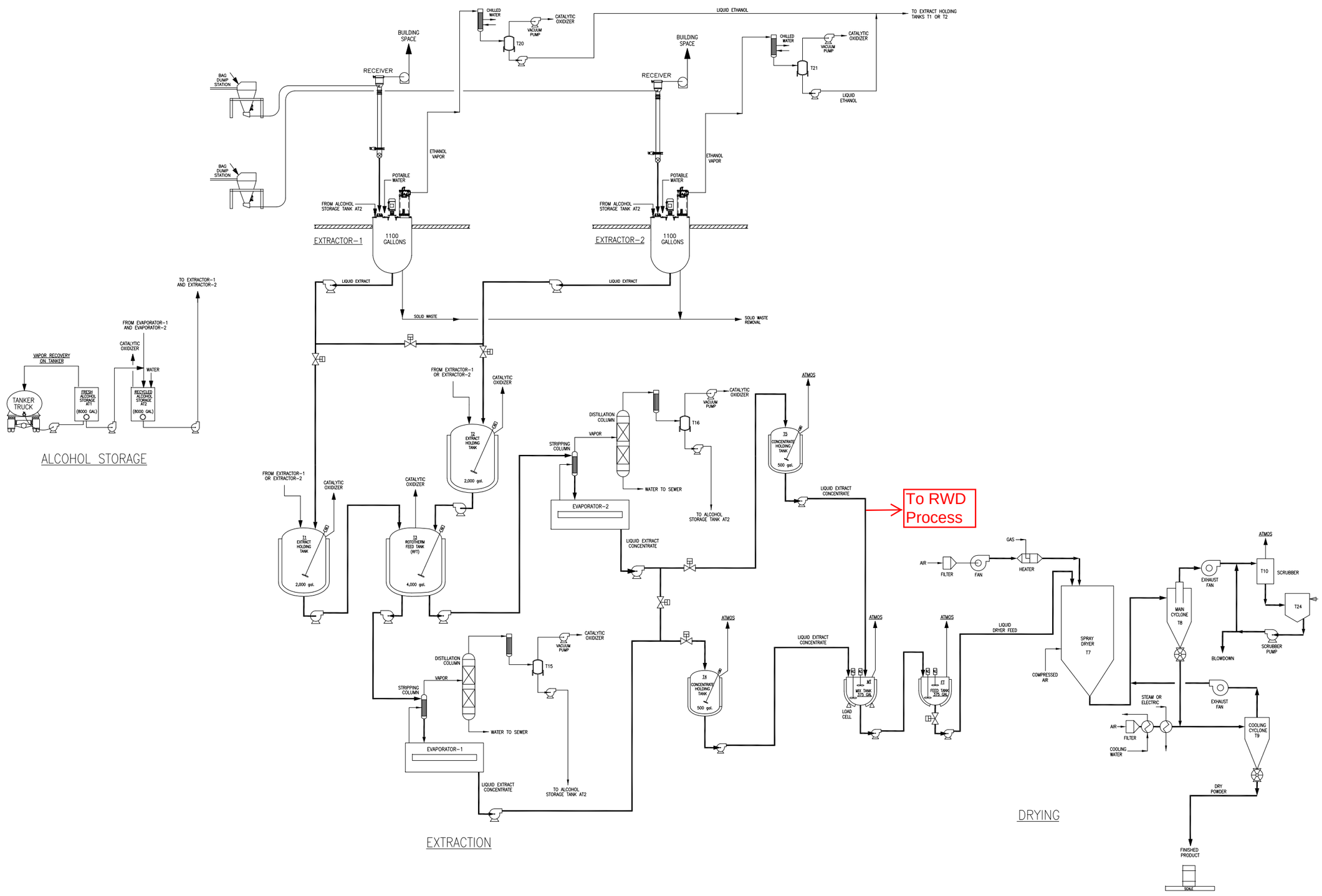


CONTRACTOR ID:

ABG Machine No.

Amway
7575 FULTON EAST,
ADA, MICHIGAN 49355

LEGEND

NOTES: 1 2 3 4

| REVIS. NO. | DATE | REVISED BY | DESCRIPTION OF REVISION | REVIS. NO. | DATE | REVISED BY | DESCRIPTION OF REVISION |
|---|---|---|---|---|---|---|---|
| A | 6/13 | MH | Revised per J.Swanson | H | | | |
| B | | | | J | | | |
| C | | | | K | | | |
| D | | | | L | | | |
| E | | | | M | | | |
| F | | | | N | | | |
| G | | | | P | | | |

TITLE: Extraction–Concentration Facility Process Flow Diagram

CORPORATE PROJECT NO.: | ENGINEERING PROJECT NO.: | ORIGINATING DEPARTMENT: Central Engineering

DRAWING NO. EC-A-001-P
DRAWN: MH | CHECKED: JS
PLOTTED: | REVISION: A
RELEASE DATE: 11/02/2012

C:\Users\AIU4634\AppData\Local\Temp\notes2E5964\EC-A-001-P Process Flow.dwg, 6/14/2013 1:32:20 PM

DRAWING NO.
NBC-500-P1

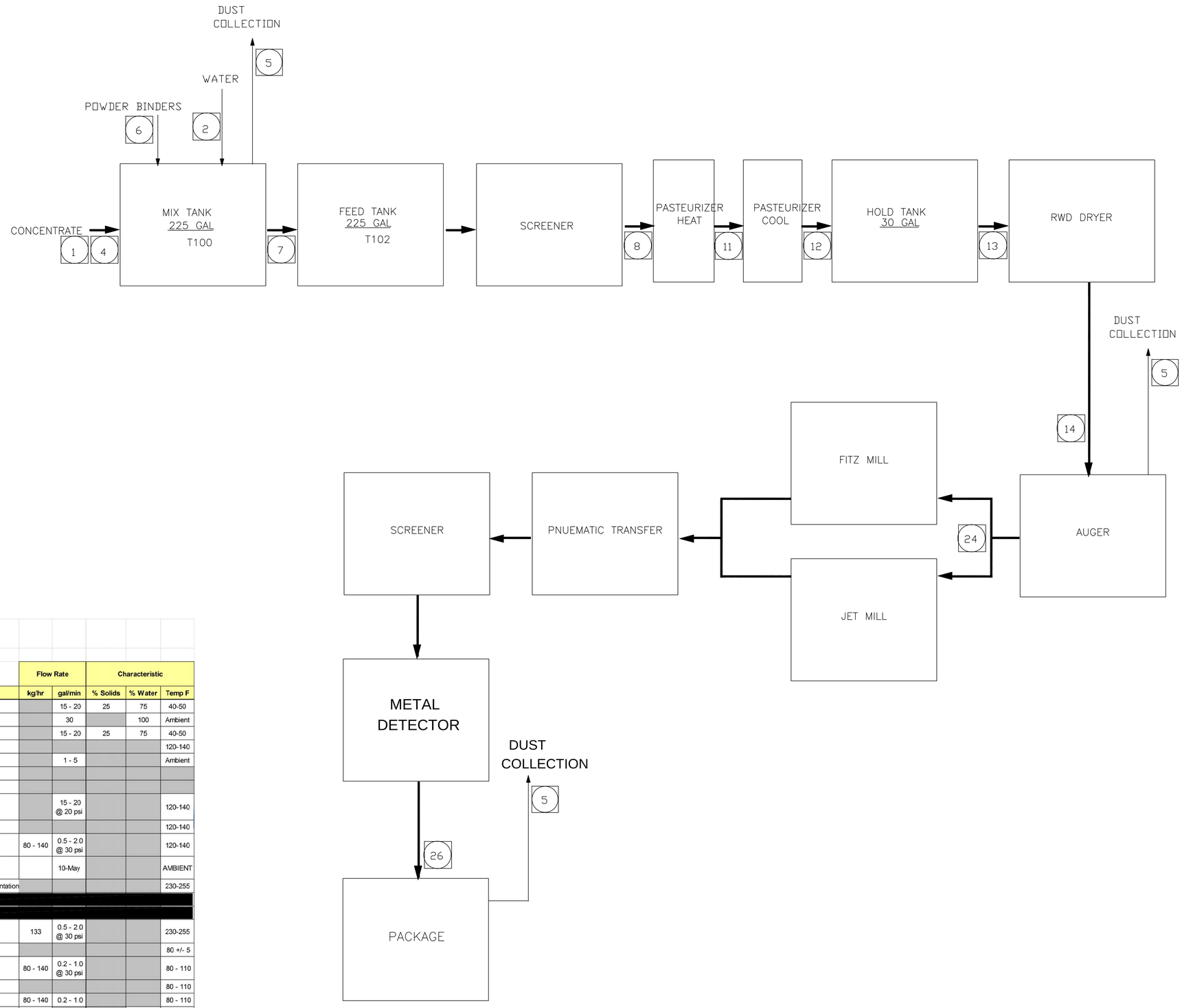


## RWD Process Flow Balance

| Stream & Tank | Material | Flow Rate kg/hr | Flow Rate gal/min | Characteristic % Solids | Characteristic % Water | Characteristic Temp F |
|---|---|---|---|---|---|---|
| 1 | Concentrate from Rototherm | | 15 - 20 | 25 | 75 | 40-50 |
| 2 | Water to Mix Tank | | 30 | | 100 | Ambient |
| 4 | Concentrate transfer from Tote to T110 | | 15 - 20 | 25 | 75 | 40-50 |
| T100 | Mix Tank, 225 gal, Working Cap = 180 gal | | | | | 120-140 |
| 2 | Water to Mix Tank | | 1 - 5 | | | Ambient |
| 5 | Dust Collection | | | | | |
| 6 | Dry Material Charging | | | | | |
| 7 | Transfer from Mix to Feed Tank | | 15 - 20 @ 20 psi | | | 120-140 |
| T102 | Feed Tank, 225 gal, Working Cap = 180 gal | | | | | 120-140 |
| 8 | Feed to Votator, Heating Chamber | 80 - 140 | 0.5 - 2.0 @ 30 psi | | | 120-140 |
| 3 | WATER, FLUSH FOR VOTATORS | | 10-May | | | AMBIENT |
| Votator #1 | Feed Pasteurizer, Size 6" Dia x 48" L, Vertical Orientation | | | | | 230-255 |
| [redacted] | | | | | | |
| 11 | Feed to Votator, Cooling Chamber | 133 | 0.5 - 2.0 @ 30 psi | | | 230-255 |
| Votator #2 | Cooling Pasteurizer, Size TBD, Vertical Orientation | | | | | 80 +/- 5 |
| 12 | Feed transfer to MCD feed tank | 80 - 140 | 0.2 - 1.0 @ 30 psi | | | 80 - 110 |
| T104 | MCD Feed Tank, 30 gallons | | | | | 80 - 110 |
| 13 | Feed transfer to MCD Belt | 80 - 140 | 0.2 - 1.0 | | | 80 - 110 |
| 14 | Dried Product at Belt Disharge | 25 - 75 | | | 1 - 3 | Ambient |
| [redacted] | | | | | | |
| 24 | MILLING | 25 - 75 | | | | |
| 26 | PACKAGING | 25 - 75 | | | 1 - 3 | 80 +/- 5 |

NUTRILITE

Amway
7575 East Fulton St. Ada, Michigan 49355
616-787-6000

| REV. | DESCRIPTION | REV. |
|---|---|---|
| | | |

ORIGINATING DEPARTMENT: Project Engineering

TITLE: Nutrilite Botanical Concentrates RWD Dryer Processing System Process Flow Diagram

FILE NO.

ENGINEERING PROJECT NO.

DRAWN: JOE D

CHECKED

DRAWING NO. NBC-500-P1

SHEET NO. 1 of 1

DATE 12/13/13

# ATTACHMENT 2

## Dust Collection Diagram
## Filter Specifications
## Emission Guarantee

DRAWING NO.
EC-A-002-P

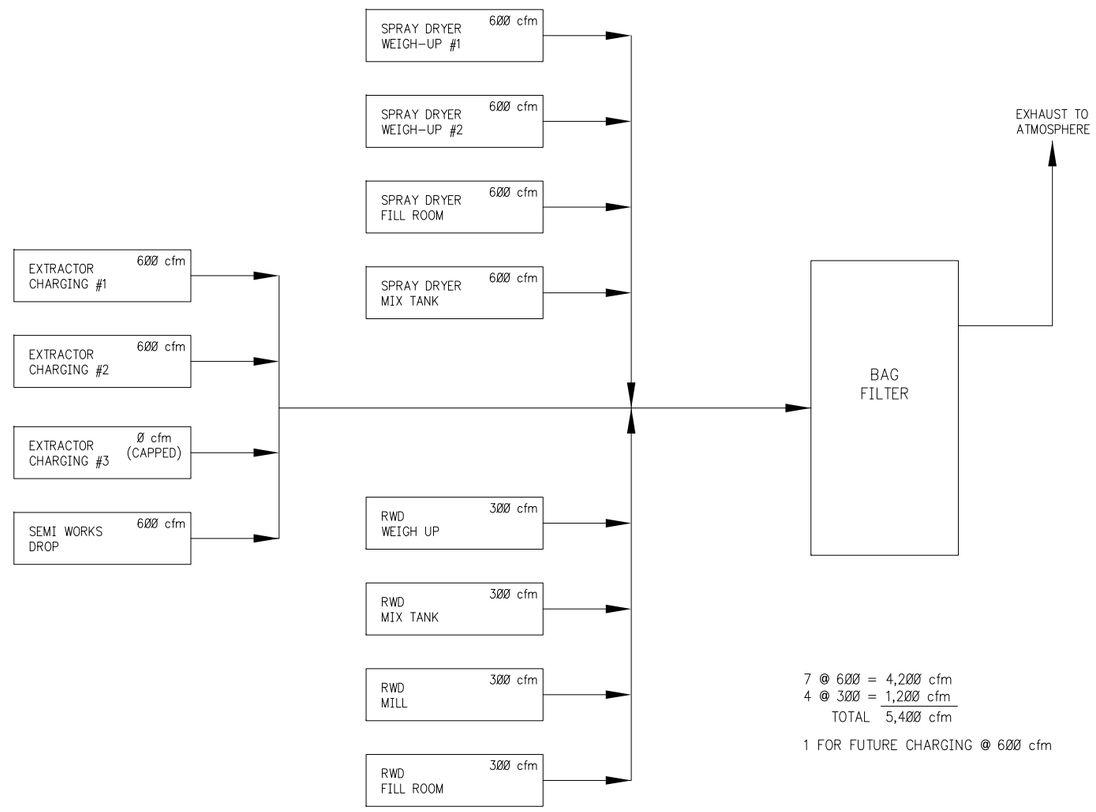


7 @ 600 = 4,200 cfm
4 @ 300 = 1,200 cfm
TOTAL 5,400 cfm

1 FOR FUTURE CHARGING @ 600 cfm

CONTRACTOR ID:

ABG Machine No.

Amway
7575 FULTON EAST,
ADA, MICHIGAN 49355

LEGEND

NOTES: 1 2 3 4

| REVIS. NO. | DATE | REVISED BY | DESCRIPTION OF REVISION | REVIS. NO. | DATE | REVISED BY | DESCRIPTION OF REVISION |
|---|---|---|---|---|---|---|---|
| A | 12.14.12 | DDI | PROCESS REVISION | H | | | |
| B | 1/14 | MH | Revised; Added RWD Info. per J.Difilippo | J | | | |
| C | | | | K | | | |
| D | | | | L | | | |
| E | | | | M | | | |
| F | | | | N | | | |
| G | | | | P | | | |

TITLE:
Extraction-Concentration Facility
Dust Collection
Process Flow Diagram

CORPORATE PROJECT NO.:
ENGINEERING PROJECT NO.:
ORIGINATING DEPARTMENT: Central Engineering

DRAWING NO. EC-A-002-P
DRAWN: MH
CHECKED: JS
PLOTTED:
REVISION: B
RELEASE DATE: 10/29/2012

S:\Support\CentEng\Central_Filing\Central Eng Projects - Current\NTR-2010-001 Extraction Concentration\Drawings\Process Flow Diagrams\EC-A-002-P Dust Collection.dwg, 1/29/2014 3:57:29 PM, M.Hines 7040

Donaldson®
Torit®

# POWERCORE® CP FILTER PACK

## ENGINEERED FOR DUST COLLECTION

- Ultra-Web® nanofiber media ensures longer filter life at a significantly lower pressure drop
- Superior particle release due to surface filtration
- Fluted media construction prevents bridging in fibrous or agglomerative applications
- Smaller and lightweight filter pack design with built-in handles
- Easy filter changeout for quicker maintenance — no tools required
- MERV* 13 filtration efficiency rating per ASHRAE 52.2-2007

PowerCore®
A Donaldson Filtration Technology

**PowerCore® CP Filter Pack**
(Available in Standard, Spunbond and Anti-Static)

## PROVEN TECHNOLOGY THAT PERFORMS

Proven and proprietary Ultra-Web® filter media delivers longer filter life, cleaner air and greater cost savings than other traditional filter media. It is made with an electrospinning process that produces a very fine, continuous, resilient fiber of 0.2-0.3 microns in diameter.

PowerCore filter packs with Ultra-Web media keep dust on the surface of the fluted channels where it is easily cleaned off unlike conventional filter bag material that depth loads, like 16 oz. (453.6 g) polyester.

- Surface loading promotes filter cleaning and longer life
- Better pulse cleaning lowers operational pressure drop and energy use

## SEM† IMAGES

1 micron = 1/25,400 of an inch (1/1,000 millimeters)

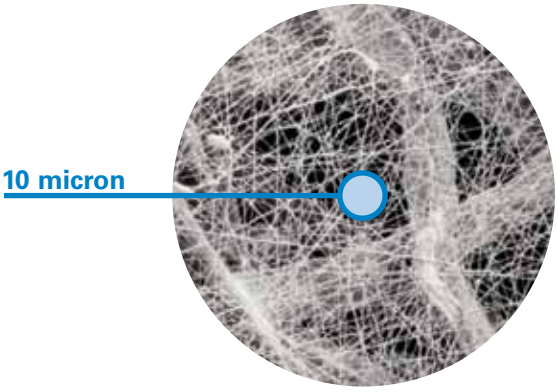


**Ultra-Web Nanofiber Technology** (600x)

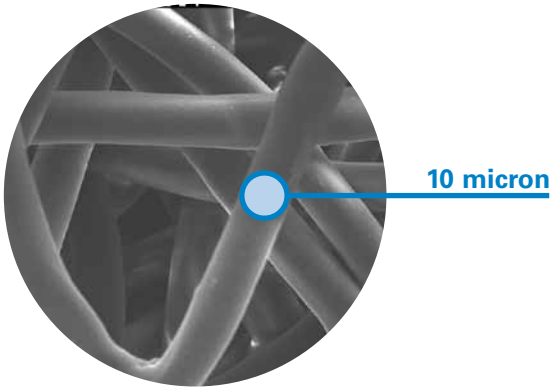


**16 oz. Polyester** (600x)

† Scanning Electron Microscope.
* Refer to Technical Information on page 2.

## APPLICATIONS

- Premium performance on fine, dry, fibrous and/or abrasive dust
- Longer life in aggressive/challenging applications
- Optional Spunbond or Anti-Static (AS) media available
- Spunbond version has excellent moisture and chemical resistance

| MEDIA COMPATIBILITY DATA | |
|---|---|
| Temperature Resistance | 150°F<br>65°C |
| Moisture Absorption** | Maximum 14%<br>@ 70°F (21°C) and 65% RH |
| Chemical Tolerance*** | Acids→Poor Oxidants→Poor<br>Bases→Fair Solvents→Fair |
| Abrasion Resistance | Excellent per TAPPI 476<br>(Taber Method) |
| Moisture Absorption** for Spunbond | 0.2–0.5%<br>@ 70°F (21°C) and 65% RH |
| Chemical Tolerance*** for Spunbond | Acids→Good Oxidants→Good<br>Bases→Good Solvents→Good |

## SPECIFICATIONS

| MEDIA COMPOSITION | |
|---|---|
| Nanofiber Technology | Durable proprietary synthetic filter media fiber and polymer<br>Mean fiber diameter of 0.2 µm |
| Substrates | • Proprietary blend of cellulose fibers<br>• Spunbond Polyester<br>• Anti-static (AS) version per ESD STM 11.11-2001 Resistance less than $10^8$ OHM |

| MEDIA EFFICIENCY | |
|---|---|
| U.S. Efficiency Rating | MERV* 13 per ASHRAE 52.2-2007 |

| FILTER PACK CONSTRUCTION | |
|---|---|
| Standard Construction | Obround design<br>Fluted media configuration<br>Urethane gasket<br>Built-in handle |

## CURRENT AVAILABLE CONFIGURATIONS

| Collector Models | Dimensions | | PowerCore | | |
|---|---|---|---|---|---|
| | in | mm | Standard | Spunbond | Anti-Static |
| CPC | 22.3 x 7.5 x 7.0 | 566.42 x 190.50 x 177.80 | • | • | • |
| CPV | 22.3 x 7.5 x 7.0 | 566.42 x 190.50 x 177.80 | • | • | • |

* The Minimum Efficiency Reporting Value (MERV) of this filter cartridge has been determined through independent laboratory testing using ASHRAE 52.2 (2007) test standards. The MERV rating was determined at a face velocity of 118 feet per minute (36.0 meters per minute) and loading up to four inches (101.6 millimeters) water gauge. Actual efficiency of any filter cartridge will vary according to the specific application parameters. Dust concentration, airflow, particle characteristics, and pulse cleaning methods all affect filtration efficiency.

** Environmental conditions involving combinations of high temperature, corrosive material, and moisture can reduce media strength. Reduction in media strength may compromise cartridge integrity and performance.

*** A combination of chemicals may alter fiber resistance to the specified performance level. Chemical attack may compromise cartridge integrity and performance.

Significantly improve the performance of your collector with genuine Donaldson Torit replacement filters and parts. **Call Donaldson Torit today 800-365-1331.**

Donaldson. FILTRATION SOLUTIONS

Tel 800-365-1331 (USA)
Tel 800-343-3639 (within Mexico)

donaldsontorit@donaldson.com
**donaldsontorit.com**

Donaldson Company, Inc.
Torit
P.O. Box 1299
Minneapolis, MN
55440-1299 U.S.A.

**EXACTLY WHAT YOU NEED.™**

**Powercore CP Filter Pack (11/12)**
© 2009 Donaldson Co., Inc. All Rights Reserved. All products, product specifications, and data (airflow, capacity, dimensions, or availability) are subject to change without notice, and may vary by region or country. Donaldson Torit, Torit PowerCore, Ultra-Web, and the color blue are registered trademarks of Donaldson Company, Inc. Contains Donaldson proprietary technology.

Donaldson Company, Inc.
Industrial Air Filtration
1400 West 94th Street
Bloomington, MN
55431-2370

Mailing Address:
P.O. Box 1299
Minneapolis, MN
55440-1299 U.S.A.

Tel 800.365.1331
Fax 952-887-3377
www.Donaldson.com
www.donaldsontorit.com

**Amway Nutrilite Facility** February 28, 2014
Attn: Ashish Jain
Address: 1333 Port Industrial Parkway
Quincy, WA 98848

Reference: Amway Nutrilite Facility Emission Guarantee for a Donaldson® Torit® PowerCore® CP Series (CPC-16) Dust Collector with PowerCore filter packs and Ultra-Web® Spunbond (SB) media.

| | |
|---|---|
| Equipment | One (1) Donaldson Torit PowerCore Model CPC-16 dust collector with (16) PowerCore filter packs with Ultra-Web SB media |
| Application | Material handling nutricuetical manufacturer mostly dry herbs. |
| Dust | Herbs |
| Inlet Loading | < 5 grains per dry standard cubic foot |
| Air Volume | 7200 CFM |
| Gas Stream | Maximum airstream temperature of 90°F |
| Collector Location | Outdoors |
| Collector Exhaust | Outdoors |

The Donaldson® Torit® PowerCore® CP Series (CPC-16) Collector equipped with (16) Donaldson Torit PowerCore filter packs with Ultra-Web® Spunbond (SB) media offers a net filtration of 450 CFM per filter pack. Based on the Donaldson Torit PowerCore CP series Collector being installed and operated in accordance with the CP series Installation, Operation, and Maintenance Manual; accepted industrial ventilation practices; and under the conditions stated above, we are offering the following emission guarantee utilizing Donaldson Torit PowerCore filter packs with Ultra-Web SB media. This guarantee does not cover filter failure due to negligence or improper operation and specifically excludes failure due to exceeding the recommended air-to-media ratio; damage due to fire, corrosion, abrasion or physical abuse; wet or oily compressed air usage, or the lack of adequate compressed air for proper filter cleaning.

Emission: The maximum average particulate emissions in the discharge gas stream from the Donaldson Torit CPC-16 Dust Collector using the PowerCore Ultra-Web SB media will not exceed 0.005 grains per dry standard cubic foot over the life of the media.

The guarantee period ends after 4000 hours of operation or 12 months from the date of shipment, whichever is shorter. This provides ample time to confirm performance meets the stipulated thresholds in this document.

[The emissions portion of this warranty requires that all emission testing be performed by a qualified testing agency agreed upon by Donaldson Company and Amway Nutrilite Facility. Such testing will be performed in accordance with recognized testing procedures, agreed upon by both Donaldson Company and Amway Nutrilite Facility. Fees for the testing will be the responsibility of Amway Nutrilite Facility.]

Pressure Drop: Average pressure drop not to exceed 6.0 inches of water gauge on a continual basis as measured across Donaldson Torit PowerCore filter packs and tube sheet of the Torit CPC-16 collector.

Donaldson Company, Inc.
Industrial Air Filtration
1400 West 94th Street
Bloomington, MN
55431-2370

Mailing Address:
P.O. Box 1299
Minneapolis, MN
55440-1299 U.S.A.

Tel 800.365.1331
Fax 952-887-3377
www.Donaldson.com
www.donaldsontorit.com

During the warranty period, Donaldson Company reserves the right to make any modifications, adjustments or take other necessary corrective actions, at Donaldson's expense, should the guarantee not be met by equipment malfunction due to defects in materials and/or workmanship as supplied by Donaldson Company. In no event shall Donaldson Company be liable for incidental, special or consequential damages resulting from nonconformity. Failure to use genuine Donaldson replacement parts or changes to the original system, either process or engineering, will cancel this guarantee.

Regards,

Patrick Hutchins
Regional Sales Director

14AN0203