Stormwater Management Manual for Western Washington

Volume III
Hydrologic Analysis and Flow Control BMPs

Prepared by:
Washington State Department of Ecology
Water Quality Program

August 2012
Publication No. 12-10-030
(A revision of Publication No. 05-10-030)

Acknowledgments

The Washington State Department of Ecology gratefully acknowledges the valuable time, comments, and expertise provided by the people listed below who contributed to the 2012 revision of Volume III of the SWMMWW. The Washington State Department of Ecology is solely responsible for any errors, omissions, and final decisions related to the 2012 SWMMWW.

Name	**Affiliation**
Pat Allen	Thurston County
Dustin Atchison	CH2M Hill, Inc.
David Baumgarten	Associated Earth Sciences, Inc.
Philip Benenati	AECOM
Doug Beyerlein	Clear Creek Solutions, Inc.
Joe Brascher	Clear Creek Solutions, Inc.
Art Chi	City of Bellevue
Shanti Colwell	Seattle Public Utilities
Jeff Fowler	City of Seattle
Claire Gibson	Seattle Public Utilities
Kim Gridley	Washington State University
Curtis Hinman	Washington State University
Josh Johnson	City of Longview
Scott Kindred	Aspect Consulting, Inc.
Curtis Koger	Associated Earth Sciences, Inc.
Alice Lancaster	Herrera Environmental Consultants, Inc.
Bill Leif	Snohomish County
Dino Marshalonis	U.S. EPA
Glorilyn Maw	MP Stormwater Engineering LLC
Chris May	Kitsap County
Aimee Navickis-Brasch	Washington State Dept. of Transportation
Leigh Nelson	Gray & Osborn, Inc.
Robert Nolan	Dept. of Ecology, Water Quality, NWRO
Elissa Ostergaard	City of Bellevue
Charles Pitz	Dept. of Ecology, Environmental Assessment
Aaron Poresky	Geosyntec Consultants
Chris Robertson	Shannon & Wilson, Inc.
Jerallyn Roetemeyer	City of Redmond
Stacey Rush	City of Kirkland
Jennifer Saltonstall	Associated Earth Sciences, Inc.
Mary Shaleen-Hansen	Dept. of Ecology, Water Quality
Tracy Tackett	Seattle Public Utilities
David Tucker	Kitsap County
Phyllis Varner	City of Bellevue
Rick Watson	City of Bellevue
Larry West	Shannon & Wilson, Inc.

Ecology Technical Lead
Ed O'Brien, P.E. – 2012 edit
Foroozan Labib, P.E. – 2012 edit

Technical Review and Editing
Carrie A. Graul – 2012 edit
Julie Robertson – 2012 edit
Kelsey Highfill – 2012 edit

Table of Contents

Acknowledgments ..... **iii**

Chapter 1 - Introduction **1-1**

1.1 Purpose of this Volume 1-1
1.2 Content and Organization of this Volume 1-1
1.3 How to Use this Volume 1-2

Chapter 2 - Hydrologic Analysis **2-1**

2.1 Minimum Computational Standards 2-1
2.1.1 Discussion of Hydrologic Analysis Methods Used for Designing BMPs 2-3
2.2 Western Washington Hydrology Model 2-4
2.2.1 Limitations to the WWHM 2-5
2.2.2 Assumptions made in creating the WWHM 2-5
2.2.3 Guidance for flow-related standards 2-9
2.3 Single Event Hydrograph Method 2-10
2.3.1 Water Quality Design Storm 2-10
2.3.2 Runoff Parameters 2-11
2.4 Closed Depression Analysis 2-17

Chapter 3 - Flow Control Design **3-1**

3.1 Roof Downspout Controls 3-1
3.1.1 Downspout Full Infiltration Systems (BMP T5.10A) 3-4
3.1.2 Downspout Dispersion Systems (BMP T5.10B) 3-11
3.1.3 Perforated Stub-Out Connections (BMP T5.10C) 3-17
3.2 Detention Facilities 3-19
3.2.1 Detention Ponds 3-19
3.2.2 Detention Tanks 3-40
3.2.3 Detention Vaults 3-45
3.2.4 Control Structures 3-50
3.2.5 Other Detention Options 3-64
3.3 Infiltration Facilities for Flow Control and for Treatment 3-65
3.3.1 Purpose 3-65
3.3.2 Description 3-65
3.3.3 Applications 3-66
3.3.4 Steps for the Design of Infiltration Facilities - Simplified Approach 3-68
3.3.5 Site Characterization Criteria 3-72
3.3.6 Design Saturated Hydraulic Conductivity – Guidelines and Criteria 3-75
3.3.7 Site Suitability Criteria (SSC) 3-83
3.3.8 Steps for Designing Infiltration Facilities - Detailed Approach 3-86
3.3.9 General Design, Maintenance, and Construction Criteria for Infiltration Facilities _3-90
3.3.10 Infiltration Basins 3-94
3.3.11 Infiltration Trenches 3-95

3.4 Stormwater-related Site Procedures and Design Guidance for Bioretention and Permeable Pavement 3-103
3.4.1 Purpose 3-103
3.4.2 Description 3-103

Volume III References 1

Resource Materials (not specifically referenced in text) 1

Appendix III-A Isopluvial Maps for Design Storms 1

Appendix III-B Western Washington Hydrology Model – Information, Assumptions, and Computation Steps 1

Appendix III-C Washington State Department of Ecology Low Impact Development Flow Modeling Guidance 1

~~**Acknowledgments ..... iii**~~

~~**Chapter 1 - Introduction ..... 1-1**~~

~~1.1 Purpose of this Volume ..... 1-1~~
~~1.2 Content and Organization of this Volume ..... 1-1~~
~~1.3 How to Use this Volume ..... 1-2~~

~~**Chapter 2 - Hydrologic Analysis ..... 2-1**~~

~~2.1 Minimum Computational Standards ..... 2-1~~
~~2.1.1 Discussion of Hydrologic Analysis Methods Used for Designing BMPs ..... 2-3~~
~~2.2 Western Washington Hydrology Model ..... 2-4~~
~~2.2.1 Limitations to the WWHM ..... 2-5~~
~~2.2.2 Assumptions made in creating the WWHM ..... 2-5~~
~~2.2.3 Guidance for flow-related standards ..... 2-9~~2-8
~~2.3 Single Event Hydrograph Method ..... 2-10~~2-10~~2-9~~
~~2.3.1 Water Quality Design Storm ..... 2-10~~
~~2.3.2 Runoff Parameters ..... 2-11~~2-10
~~2.4 Closed Depression Analysis ..... 2-17~~

~~**Chapter 3 - Flow Control Design ..... 3-1**~~

~~3.1 Roof Downspout Controls ..... 3-1~~
~~3.1.1 Downspout Full Infiltration Systems (BMP T5.10A) ..... 3-4~~
~~3.1.2 Downspout Dispersion Systems (BMP T5.10B) ..... 3-11~~
~~3.1.3 Perforated Stub-Out Connections ..... 3-17~~
~~3.2 Detention Facilities ..... 3-19~~
~~3.2.1 Detention Ponds ..... 3-19~~
~~3.2.2 Detention Tanks ..... 3-40~~
~~3.2.3 Detention Vaults ..... 3-45~~

~~3.2.4 Control Structures ..... 3-50~~
~~3.2.5 Other Detention Options ..... 3-64~~
~~3.3 Infiltration Facilities for Flow Control and for Treatment ..... 3-65~~
~~3.3.1 Purpose ..... 3-65~~
~~3.3.2 Description ..... 3-65~~
~~3.3.3 Applications ..... 3-66~~
~~3.3.4 Steps for the Design of Infiltration Facilities - Simplified Approach ..... 3-68~~
~~3.3.5 Site Characterization Criteria ..... 3-72~~
~~3.3.6 Design Saturated Hydraulic Conductivity – Guidelines and Criteria ..... 3-75~~
~~3.3.7 Site Suitability Criteria (SSC) ..... 3-83~~
~~3.3.8 Steps for Designing Infiltration Facilities - Detailed Approach ..... 3-86~~
~~3.3.9 General Design, Maintenance, and Construction Criteria for Infiltration Facilities ..... 3-90~~
~~3.3.10 Infiltration Basins ..... 3-94~~
~~3.3.11 Infiltration Trenches ..... 3-95~~
~~3.4 Stormwater-related Site Procedures and Design Guidance for Bioretention and Permeable Pavement ..... 3-103~~
~~3.4.1 Purpose ..... 3-103~~
~~3.4.2 Description ..... 3-103~~

~~**Volume III References ..... R-1**~~

~~**Resource Materials (not specifically referenced in text) ..... Res-1**~~

~~**Appendix III-A – Isopluvial Maps for Design Storms ..... A-1**~~

~~**Appendix III-B – Western Washington Hydrology Model – Information, Assumptions, and Computation Steps ..... B-1**~~

~~**Appendix III-C – Washington State Department of Ecology Low Impact Development Flow Modeling Guidance ..... C-1**~~

List of Tables

Table 2.1.1 Summary of the application design methodologies 2-2
Table 2.3.1 Hydrologic Soil Series for Selected Soils in Washington State.....2-11
Table 2.3.2 Runoff Curve Numbers for Selected Agricultural, Suburban, and Urban Areas.....2-15
Table 3.2.1 Small Trees and Shrubs with Fibrous Roots 3-28
Table 3.2.2 Stormwater Tract "Low Grow" Seed Mix 3-30
Table 3.2.3 Specific Maintenance Requirements for Detention Ponds.....3-36
Table 3.2.4 Specific Maintenance Requirements for Detention Vaults/Tanks 3-43
Table 3.2.5 Maintenance of Control Structures and Catchbasins 3-55
Table 3.2.6 Values of C_d for Sutro Weirs.....3-62
Table 3.3.1 Correction Factors to be Used With In-Situ Saturated Hydraulic Conductivity Measurements to Estimate Design Rates. 3-82
Table 3.4.1 Correction factors for in-situ Saturated Hydraulic Conductivity measurements to estimate design (long-term) infiltration rates of subgrade soils underlying Bioretention 3-106
Table 3.4.2 Correction factors for in-situ Saturated Hydraulic Conductivity (Ksat) measurements to estimate design (long-term) infiltration rates.....3-109
Table C.1 Flow Control Credits for Retained Trees. 5
Table C.2. Flow Control Credits for Newly Planted Trees. 6
~~Table 2.1.1 Summary of the application design methodologies.....2-2~~
~~Table 2.3.1 Hydrologic Soil Series for Selected Soils in Washington State .....2-11~~
~~Table 2.3.2 Runoff Curve Numbers for Selected Agricultural, Suburban, and Urban Areas .....2-15~~
~~Table 3.2.1 Small Trees and Shrubs with Fibrous Roots .....3-28~~
~~Table 3.2.2 Stormwater Tract "Low Grow" Seed Mix.....3-30~~
~~Table 3.2.3 Specific Maintenance Requirements for Detention Ponds.....3-36~~
~~Table 3.2.4 Specific Maintenance Requirements for Detention Vaults/Tanks .....3-43~~
~~Table 3.2.5 Maintenance of Control Structures and Catchbasins .....3-55~~
~~Table 3.2.6 Values of Cd for Sutro Weirs.....3-62~~
~~Table 3.3.1 Correction Factors to be Used With In-Situ Saturated Hydraulic Conductivity Measurements to Estimate Design Rates. .....3-82~~
~~Table 3.4.1 Correction factors for in-situ Saturated Hydraulic Conductivity measurements to estimate design (long-term) infiltration rates of subgrade soils underlying Bioretention.....3-106~~
~~Table 3.4.2 Correction factors for in-situ Saturated Hydraulic Conductivity (Ksat) measurements to estimate design (long-term) infiltration rates .....3-109~~
~~Table C.1 Flow Control Credits for Retained Trees. .....C-5~~

~~Table C.2. Flow Control Credits for Newly Planted Trees..... C-665~~

List of Figures

Figure 3.1.1 - Flow Diagram Showing Selection of Roof Downspout Controls 3-3
Figure 3.1.2 - Typical Downspout Infiltration Trench 3-7
Figure 3.1.3 - Alternative Downspout Infiltration Trench System for Coarse Sand and Gravel 3-8
Figure 3.1.4 - Typical Downspout Infiltration Drywell 3-9
Figure 3.1.5 - Typical Downspout Dispersion Trench 3-13
Figure 3.1.6 - Standard Dispersion Trench with Notched Grade Board 3-14
Figure 3.1.7 - Typical Downspout Splashblock Dispersion.....3-16
Figure 3.1.8 - Perforated Stub-Out Connection.....3-18
Figure 3.2.1 - Typical Detention Pond 3-31
Figure 3.2.2 - Typical Detention Pond Sections 3-32
Figure 3.2.3 - Overflow Structure 3-33
Figure 3.2.4 - Example of Permanent Surface Water Control Pond Sign.....3-34
Figure 3.2.5 - Weir Section for Emergency Overflow Spillway.....3-40
Figure 3.2.6 - Typical Detention Tank 3-44
Figure 3.2.7 - Detention Tank Access Detail 3-45
Figure 3.2.8 - Typical Detention Vault 3-49
Figure 3.2.9 - Flow Restrictor (TEE) 3-52
Figure 3.2.10 - Flow Restrictor (Baffle).....3-53
Figure 3.2.11 - Flow Restrictor (Weir).....3-54
Figure 3.2.12 - Simple Orifice.....3-58
Figure 3.2.13 - Rectangular, Sharp-Crested Weir 3-59
Figure 3.2.14 - V-Notch, Sharp-Crested Weir 3-60
Figure 3.2.15 - Sutro Weir.....3-61
Figure 3.2.16 - Riser Inflow Curves.....3-63
Figure 3.3.1 - Typical Infiltration Pond/Basin 3-67
Figure 3.3.2 - Steps for Design of Infiltration Facilities – Simplified Approach 3-71
Figure 3.3.3 - Engineering Design Steps for Final Design of Infiltration Facilities Using the Detailed Method 3-87
Figure 3.3.4 - Schematic of an Infiltration Trench.....3-96
Figure 3.3.5 - Parking Lot Perimeter Trench Design 3-97
Figure 3.3.6 - Median Strip Trench Design.....3-98

Figure 3.3.7 - Oversized Pipe Trench Design 3-98
Figure 3.3.8 - Swale/Trench Design 3-99
Figure 3.3.9 - Underground Trench with Oil/Grit Chamber 3-99
Figure 3.3.10 - Observation Well Details 3-102
~~Figure 3.1.1 - Flow Diagram Showing Selection of Roof Downspout Controls ..... 3-3~~
~~Figure 3.1.2 - Typical Downspout Infiltration Trench ..... 3-7~~
~~Figure 3.1.3 - Alternative Downspout Infiltration Trench System for Coarse Sand and Gravel ..... 3-8~~
~~Figure 3.1.4 - Typical Downspout Infiltration Drywell ..... 3-9~~
~~Figure 3.1.5 - Typical Downspout Dispersion Trench ..... 3-13~~
~~Figure 3.1.6 - Standard Dispersion Trench with Notched Grade Board ..... 3-14~~
~~Figure 3.1.7 - Typical Downspout Splashblock Dispersion ..... 3-16~~
~~Figure 3.1.8 - Perforated Stub-Out Connection ..... 3-18~~
~~Figure 3.2.1 - Typical Detention Pond ..... 3-31~~
~~Figure 3.2.2 - Typical Detention Pond Sections ..... 3-32~~
~~Figure 3.2.3 - Overflow Structure ..... 3-33~~
~~Figure 3.2.4 - Example of Permanent Surface Water Control Pond Sign ..... 3-34~~
~~Figure 3.2.5 - Weir Section for Emergency Overflow Spillway ..... 3-40~~
~~Figure 3.2.6 - Typical Detention Tank ..... 3-44~~
~~Figure 3.2.7 - Detention Tank Access Detail ..... 3-45~~
~~Figure 3.2.8 - Typical Detention Vault ..... 3-49~~
~~Figure 3.2.9 - Flow Restrictor (TEE) ..... 3-52~~
~~Figure 3.2.10 - Flow Restrictor (Baffle) ..... 3-53~~
~~Figure 3.2.11 - Flow Restrictor (Weir) ..... 3-54~~
~~Figure 3.2.12 - Simple Orifice ..... 3-58~~
~~Figure 3.2.13 - Rectangular, Sharp-Crested Weir ..... 3-59~~
~~Figure 3.2.14 - V-Notch, Sharp-Crested Weir ..... 3-60~~
~~Figure 3.2.15 - Sutro Weir ..... 3-61~~
~~Figure 3.2.16 - Riser Inflow Curves ..... 3-63~~
~~Figure 3.3.1 - Typical Infiltration Pond/Basin ..... 3-67~~
~~Figure 3.3.2 - Steps for Design of Infiltration Facilities – Simplified Approach ..... 3-71~~
~~Figure 3.3.3 - Engineering Design Steps for Final Design of Infiltration Facilities Using the Detailed Method ..... 3-87~~
~~Figure 3.3.4 - Schematic of an Infiltration Trench ..... 3-96~~
~~Figure 3.3.5 - Parking Lot Perimeter Trench Design ..... 3-97~~
~~Figure 3.3.6 - Median Strip Trench Design ..... 3-98~~
~~Figure 3.3.7 - Oversized Pipe Trench Design ..... 3-98~~
~~Figure 3.3.8 - Swale/Trench Design ..... 3-99~~

~~Figure 3.3.9 - Underground Trench with Oil/Grit Chamber ..... 3-99~~
~~Figure 3.3.10 - Observation Well Details ..... 3-102~~

Chapter 1 - Introduction

1.1 Purpose of this Volume

Best Management Practices (BMPs) are schedules of activities, prohibitions of practices, maintenance procedures, managerial practices, or structural features that prevent or reduce adverse impacts to waters of Washington State. As described in Volume I of this stormwater manual, BMPs for long-term management of stormwater at developed sites can be divided into three main categories:

- BMPs addressing the volume and timing of stormwater flows,
- BMPs addressing prevention of pollution from potential sources.
- BMPs addressing treatment of runoff to remove sediment and other pollutants.

This volume of the stormwater manual focuses mainly on the first category. It presents techniques of hydrologic analysis, and BMPs related to management of the amount and timing of stormwater flows from developed sites. The purpose of this volume is to provide guidance on the estimation and control of stormwater runoff quantity.

BMPs for preventing pollution of stormwater runoff and for treating contaminated runoff are presented in Volumes IV and V, respectively.

1.2 Content and Organization of this Volume

Volume III of the stormwater manual contains three chapters. Chapter 1 serves as an introduction. Chapter 2 reviews methods of hydrologic analysis, covers the use of hydrograph methods for designing BMPs, and provides an overview of various computerized modeling methods and analysis of closed depressions. Chapter 3 describes flow control BMPs and provides design specifications for roof downspouts and detention facilities. It also provides design considerations of infiltration facilities for flow control.

This volume includes three appendices. Appendix A has isopluvial maps for western Washington. Appendix B has information and assumptions on the Western Washington Hydrology Model (WWHM). Appendix C includes detailed information concerning how to represent various Low Impact Development (LID) techniques in continuous runoff models so that the models predict lower surface runoff rates and volumes.

Design considerations for conveyance systems are not included in the stormwater manual, as this topic is adequately covered in standard engineering references.

1.3 How to Use this Volume

Volume I should be consulted to determine Minimum Requirements for flow management (e.g. Minimum Requirements #4, #5 and #7 in Chapter 2 of Volume I). After the Minimum Requirements have been determined, this volume should be consulted to design flow management facilities. These facilities can then be included in Stormwater Site Plans (see Volume I, Chapter 3).

Chapter 2 - Hydrologic Analysis

The broad definition of hydrology is "the science which studies the source, properties, distribution, and laws of water as it moves through its closed cycle on the earth (the hydrologic cycle)." As applied in this manual, however, the term "hydrologic analysis" addresses and quantifies only a small portion of this cycle. That portion is the relatively short-term movement of water over the land resulting directly from precipitation and called surface water or stormwater runoff. Localized and long-term ground water movement must also be of concern, but generally only as this relates to the movement of water on or near the surface, such as stream base flow or infiltration systems.

The purpose of this chapter is to define the minimum computational standards required, to outline how these may be applied, and to reference where more complete details may be found, should they be needed. This chapter also provides details on the hydrologic design process; that is, what are the steps required in conducting a hydrologic analysis, including flow routing.

2.1 Minimum Computational Standards

The minimum computational standards depend on the type of information required and the size of the drainage area to be analyzed, as follows:

1. For the purpose of designing most types of runoff treatment BMPs, a calibrated continuous simulation hydrologic model based on the EPA's HSPF (Hydrologic Simulation Program-Fortran) program, or an approved equivalent model, must be used to calculate runoff and determine the water quality design flow rates and volumes.

   For the purpose of designing wetpool treatment facilities, there are two acceptable methods: an approved continuous runoff model to estimate the 91st percentile, 24-hour runoff volume, or the NRCS (Natural Resources Conservation Service) curve number method to determine a water quality design storm volume. The water quality design storm volume is the amount of runoff predicted from the 6-month, 24-hour storm.

   For the purpose of designing flow control BMPs, a calibrated continuous simulation hydrologic model, based on the EPA's HSPF, must be used.

   The circumstances under which different methodologies apply are summarized below in Table 2.1.1.

Table 2.1.1 Summary of the application design methodologies		
Method	**BMP designs in western Washington**	
	Treatment	**Flow Control**
SCSUH/SBUH (Soil Conservation Service Unit Hydrograph/Santa Barbara Unit Hydrograph)	Method applies for BMPs that are sized based on the volume of runoff from a 6-month, 24-hour storm. Currently, that includes only wetpool-facilities. **Note**: These BMPs don't require generating a hydrograph.	Not Applicable
Continuous Runoff Models: (WWHM or approved alternatives. See below)	Method applies to all BMPs.	Method applies throughout Western Washington

2. If a basin plan is being prepared, then a hydrologic analysis should be performed using a continuous simulation model such as the EPA's HSPF model, the EPA's Stormwater Management Model (SWMM), or an equivalent model as approved by the local government.

   Significant progress has been made in the development and availability of HSPF-based continuous runoff models for Western Washington. The Department of Ecology has coordinated the development of the Western Washington Hydrology Model (WWHM). It uses rainfall/runoff relationships developed for specific basins in the Puget Sound region to all parts of western Washington. Where field monitoring establishes basin-specific rainfall/runoff parameter calibrations, those can be entered into the model, superseding the default input parameters.

   Two other HSPF-based continuous runoff models have been approved by the Department of Ecology: MGS Flood and KCRTS (King County Runoff Time Series). Though MGS Flood uses different, extended precipitation files, its features and more importantly, its runoff estimations are very similar to those predicted by WWHM. KCRTS is a pre-packaged set of runoff files developed by King County. It can be used throughout King County. Use of other continuous simulation models should receive prior approval from Ecology.

   Where large master-planned developments are proposed, local governments should consider requiring a basin-specific calibration of HSPF rather than use of the default parameters in the above-referenced models. Ecology suggests such basin-specific calibrations should be considered for projects that will occupy more than 320 acres.

2.1.1 Discussion of Hydrologic Analysis Methods Used for Designing BMPs

This section provides a discussion of the methodologies to be used for calculating stormwater runoff from a project site. It includes a discussion of estimating stormwater runoff with single event models, such as the Santa Barbara Unit Hydrograph (SBUH), versus continuous simulation models.

Single Event and Continuous Simulation Model

A continuous simulation model has considerable advantages over the single event-based methods such as the SCSUH, SBUH, or the Rational Method. HSPF is a continuous simulation model that is capable of simulating a wider range of hydrologic responses than the single event models such as the SBUH method. Single event models cannot take into account storm events that may occur just before or just after the single event (the design storm) that is under consideration. In addition, the runoff files generated by the HSPF models are the result of a considerable effort to introduce local parameters and actual rainfall data into the model and therefore produce better estimations of runoff than the SCSUH, SBUH, or Rational methods.

Ecology has developed a continuous simulation hydrologic model (WWHM) based on the HSPF for use in western Washington (see Section 2.2). Continuous rainfall records/data files have been obtained and appropriate adjustment factors were developed as input to HSPF. Input algorithms (referred to as IMPLND and PERLND) have been developed for a number of watershed basins in King, Pierce, Snohomish, and Thurston counties. These rainfall files and model algorithms are used in the HSPF in western Washington. Local counties and cities are encouraged to develop basin-specific calibrations of HSPF that can be input into the WWHM. However, until such a calibration is developed for a specific basin, the input data mentioned above must be used throughout western Washington.

Concerns with SBUH

A summary of the concerns with SBUH and other single event models is in order.

While SBUH may give acceptable estimates of total runoff volumes, it tends to overestimate peak flow rates from pervious areas because it cannot adequately model subsurface flow (which is a dominant flow regime for pre-development conditions in western Washington basins). One reason SBUH overestimates the peak flow rate for pervious areas is that the actual time of concentration is typically greater than what is assumed. Better flow estimates could be made if a longer time of concentration was used. This would change both the peak flow rate (i.e., it would be lower) and the shape of the hydrograph (i.e., peak occurs

somewhat later) such that the hydrograph would better reflect actual pre-developed conditions.

Another reason for overestimation of the runoff is the curve numbers (CN) in the 1992 Manual. These curve numbers were developed by US-Natural Resources Conservation Service (NRCS), formerly the Soil Conservation Service (SCS) and published as the Western Washington Supplemental Curve Numbers. These CN values are typically higher than the standard CN values published in Technical Release 55, June 1986. In 1995, the NRCS recalled the use of the western Washington CNs for floodplain management and found that the standard CNs better describe the hydrologic conditions for rainfall events in western Washington. However, based on runoff comparisons with the KCRTS better estimates of runoff are obtained when using the western Washington CNs for the developed areas such as parks, lawns, and other landscaped areas. Accordingly, the CNs in this manual (see Table 2.3.2) are changed to those in the Technical Release 55 except for the open spaces category for the developed areas which include, lawn, parks, golf courses, cemeteries, and landscaped areas. For these areas, the western Washington CNs are used. These changes are intended to provide better runoff estimates using the SBUH method.

Another major weakness of SBUH is that it is used to model a 24-hour storm event, which is too short to model longer-term storms in western Washington. The use of a longer-term (e.g. 3- or 7-day storm) is perhaps better suited for western Washington.

Related to the last concern is the fact that single event approaches, such as SBUH, assume that flow control ponds are empty at the start of the design event. Continuous runoff models are able to simulate a continuous long-term record of runoff and soil moisture conditions. They simulate situations where ponds are not empty when another rain event begins.

Finally, single event models do not allow for estimation and analyses of flow durations nor water level fluctuations. Flow durations are necessary for discharges to streams. Estimates of water level fluctuations are necessary for discharges to wetlands and for tracking influent water elevations and bypass quantities to properly size treatment facilities.

2.2 Western Washington Hydrology Model

This section summarizes the assumptions made in creating the western Washington Hydrology Model (WWHM) and discusses limitations of the model. Appendix III-B contains more information on the assumptions and on WWHM. However, since the first version of WWHM was developed and released to public in 2001, the WWHM program has gone through several upgrades incorporating new features and capabilities including low impact development (LID) modeling capability. ~~Ecology anticipates that the next upgrade to WWHM will add low impact development (LID)~~

~~modeling capability.~~ WWHM users should periodically check Ecology's WWHM web site for the latest releases of WWHM, user manual, and any supplemental instructions. The web address for WWHM is: www.ecy.wa.gov/programs/wq/stormwater/wwhmtraining/index.html.

2.2.1 Limitations to the WWHM

Ecology created WWHM for the specific purpose of sizing stormwater control facilities for new developments in western Washington. WWHM can be used for a range of conditions and developments; however, certain limitations are inherent in this software.

WWHM uses the EPA HSPF software program to do all of the rainfall-runoff and routing computations. Therefore, HSPF limitations are included in WWHM. For example, backwater or tailwater control situations are not explicitly modeled by HSPF. This is also true in WWHM.

Earlier versions of WWHM, WWHM1and WWHM2 had ~~In addition, WWHM is~~ limited ~~in its~~ routing capabilities. The routing capabilities of WWHM3 and WWHM2012 have improved and ~~The~~ the user can~~is allowed to~~ input multiple stormwater control facilities and runoff is routed through them. If the proposed development site involves routing through a natural lake or wetland in addition to multiple stormwater control facilities, WWHM2012 can be used ~~then the user should use HSPF~~ to do the routing computations and additional analysis.

~~Routing effects become more important as the drainage area increases. For this reason, Ecology recommends that the WWHM not be used for drainage areas greater than one-half square mile (320 acres). WWHM can be used for small drainage areas less than an acre in size.~~

2.2.2 Assumptions made in creating the WWHM

Precipitation data.

- WWHM uses long-term (~~43~~ over 50 years) precipitation data to simulate the potential impacts of land use development in western Washington. A minimum period of 20 years is required to simulate enough peak flow events to produce accurate flow frequency results.
- WWHM uses a over 17 precipitation stations, representing the different rainfall regimes found in western Washington. Ecology encourages local governments to use more detailed local precipitation data ~~as~~ when available.
- The precipitation stations represent rainfall at elevations below 1500 feet. WWHM does not include snowfall and snowmelt.
- National Weather Service stations provide the primary source for precipitation data.

- The base computational time step used in the earlier versions of WWHM was~~is~~ one hour. However, ~~future versions of~~ WWHM2012 ~~will~~ incorporates and uses 15-minute precipitation data ~~as it becomes available~~.

  The ~~one-hour~~ 15-minute time step was selected to better represent the temporal variability of actual precipitation~~ than daily data~~. ~~WWHM2012 now uses 15-minute precipitation~~This data ~~in~~ is used in WWHM2012 ~~its~~ computations to generate runoff hydrograph. The computations include generating design flows and volumes for sizing water quality treatment facilities. The 15-minute water quality design flows are used for the design of water quality treatment facilities that are expected to have a hydraulic residence time of less than one hour. ~~Based on more frequent (15-minute) rain data collected over 25 years in Seattle, a relationship has been developed and incorporated in WWHM for converting the 60-minute water quality design flows to 15-minute flows. Future versions of WWHM using the 15-minute precipitation time series will not use this relationship. Instead, WWHM will calculate the 15-minute water quality design flows directly.~~

  ~~The 15-minute water quality design flows are more appropriate, and must be used, for the design of water quality treatment facilities that are expected to have a hydraulic residence time of less than one hour.~~

Precipitation multiplication factors.

- WWHM uses precipitation multiplication factors to increase or decrease recorded precipitation data to better represent local rainfall conditions.
- The factors are based on the ratio of the 24-hour, 25-year rainfall intensities for the representative precipitation gage and the surrounding area represented by that gage's record.
- The factors have been placed in the WWHM database and linked to each county's map. They will be transparent to the general user:~~,~~ however, the advanced user has the ability to change the coefficient for a specific site where justified and approved by the reviewing jurisdiction. Changes made by the user will be recorded in the WWHM output. By default, WWHM does not allow the precipitation multiplication factor to go below 0.8 or above 2.

Pan evaporation data.

- WWHM uses pan evaporation coefficients to compute the actual evapotranspiration potential (AET) for a site, based on the potential evapotranspiration (PET) and available moisture supply. AET accounts for the precipitation that returns to the atmosphere without becoming runoff.

- The pan evaporation coefficients have been placed in the WWHM database and linked to each county's map. They will be transparent to the general user. Advanced users have the ability to change the coefficient for a specific site where justified and approved by the reviewing jurisdiction-. These changes will be recorded in the WWHM output.

Soil data.

- WWHM uses three predominant soil types to represent the soils of western Washington: till, outwash, and saturated.
- The user determines actual local soil conditions for the specific development planned and inputs that data into WWHM. The user inputs the number of acres of outwash (A/B), till (C/D), and saturated (wetland) soils for the site conditions.
- Additional soils will be included in WWHM if appropriate HSPF parameter values are found to represent other major soil groups.

Vegetation data.

- WWHM represents the vegetation of western Washington with three predominant vegetation categories: forest, pasture, and lawn (also known as grass).
- The predevelopment land conditions are generally assumed as forest (the default condition), however, the user has the option of specifying pasture if there is documented evidence that pasture vegetation was native to the pre-development site. In highly urbanized basins (see Minimum Requirement #7 in Volume I, Chapter 2), it is possible to use the existing land cover as the pre-developed land condition.

Development land use data.

- Development land use data are used to represent the type of development planned for the site and are used to determine the appropriate size of the required stormwater mitigation facility.
- Earlier versions of WWHM included a Standard residential development option which made specific assumptions about the amount of impervious area per lot and its division between driveways and rooftops. Streets and sidewalk areas were input separately. Ecology had selected a standard impervious area of 4200 square feet per residential lot, with 1000 square feet of that as driveway, walkways, and patio area, and the remainder as rooftop area.

The more recent versions of WWHM (e.g., WWHM3 or WWHM2012) no longer have the Standard residential development category. Users can use the above land use assumptions for a modeling runoff from Standard residential development or, where better land use information is available, use that information to model and estimate runoff from the residential development.

- WWHM distinguishes between effective impervious area and non-effective impervious area in calculating total impervious area.
- Credits are given for infiltration and dispersion of roof runoff and for use of porous pavement for driveway areas. Ecology anticipates that future versions of WWHM will include LID modeling features, will calculate credits directly in the model, and will come with a user manual that provides modeling instructions for LIDs.
- Forest and pasture vegetation areas are only appropriate for separate undeveloped parcels dedicated as open space, wetland buffer, or park within the total area of the development. ***Development areas must only be designated as forest or pasture where legal restrictions can be documented that protect these areas from future disturbances.***
- WWHM can model bypassing a portion of the runoff from the development area around a stormwater detention facility and/or having off-site inflow enter the development area.

Application of WWHM in Redevelopments Projects

Redevelopment requirements may allow, for some portions of the redevelopment project area, the predeveloped condition to be modeled as the existing condition rather than forested or pasture condition. For instance, where the replaced impervious areas do not have to be served by updated flow control facilities because area or cost thresholds in Section 2.4.2 of Volume I are not exceeded.

Pervious and Impervious Land Categories (PERLND and IMPLND parameter values)

- In WWHM (and HSPF) pervious land categories are represented by PERLNDs; impervious land categories by IMPLNDs.
- WWHM provides over 20- unique PERLND parameters that describe various hydrologic factors that influence runoff and 4 parameters to represent IMPLND.

These values are based on regional parameter values developed by the U.S. Geological Survey for watersheds in western Washington (Dinicola, 1990) plus additional HSPF modeling work conducted by AQUA TERRA Consultants.

Surface runoff and interflow are computed based on the PERLND and IMPLND parameter values. Ground water flow can also be computed and added to the total runoff from a development if there is a reason to believe that ground water would be surfacing (such as where there is a cut in a slope). However, the default condition in WWHM assumes that no ground water flow from small catchments reaches the surface to become runoff.

2.2.3 Guidance for flow-related standards

Flow-related standards are used to determine whether or not a proposed stormwater facility will provide a sufficient level of mitigation for the additional runoff from land development. There are three flow-related standards stated in Volume I of this Manual: Minimum Requirement #5 – On-site Stormwater Management; Minimum Requirement #7 - Flow Control; and Minimum Requirement #8 - Wetlands Protection).

Minimum Requirement #5 allows the user to demonstrate compliance with the LID Performance Standard of matching developed discharge durations to pre-developed durations for the range of pre-developed discharge rates from 8% of the 2-year peak flow to 50% of the 2-year peak flow. If the postdevelopment flow duration values exceed any of the predevelopment flow levels between 8% and 50% of the 2-year predevelopment peak flow values, then the LID performance standard has not been met.

Minimum Requirement #7 specifies that stormwater discharges to streams shall match developed discharge durations to predeveloped durations for the range of predeveloped discharge rates from 50% of the 2-year peak flow up to the full 50-year peak flow.

WWHM computes the predevelopment 2- through 100-year flow frequency values and computes the post-development runoff 2- through 100-year flow frequency values from the outlet of the proposed stormwater facility.

- The model uses pond discharge data to compare the predevelopment and postdevelopment durations and determines if the flow control standards have been met.
- There are three criteria by which flow duration values are compared:
    1. If the postdevelopment flow duration values exceed any of the predevelopment flow levels between 50% and 100% of the 2-year predevelopment peak flow values (100 Percent Threshold) then the flow duration requirement has not been met.
    2. If the postdevelopment flow duration values exceed any of the predevelopment flow levels between 100% of the 2-year and 100% of the 50-year predevelopment peak flow values more than 10 percent of the time (110 Percent Threshold) then the flow duration requirement has not been met.
    3. If more than 50 percent of the flow duration levels exceed the 100 percent threshold then the flow duration requirement has not been met.

Minimum Requirement #8 specifies that total discharge to a wetland must not deviate by more than 20% on daily ~~a single event~~ basis, and must not deviate by more than 15% on a monthly basis. Flow components feeding the wetland under both pre- and post-development

scenarios are assumed to be the sum of the surface, interflow, and ground water flows from the project site. Ecology ~~anticipates revising the~~has added the capability to model flows to wetlands and analyze the daily and monthly flow deviations per Minimum Requirements #8 (above) in WWHM2012~~ to more easily allow this comparison and plans to provide wetland modeling guidance based on the WWHM revisions~~.

2.3 Single Event Hydrograph Method

Hydrograph analysis utilizes the standard plot of runoff flow versus time for a given design storm, thereby allowing the key characteristics of runoff such as peak, volume, and phasing to be considered in the design of drainage facilities. Because the only utility for single event methods in this manual is to size wet pool treatment facilities, only the subjects of design storms, curve numbers and calculating runoff volumes are presented. If single event methods are used to size temporary and permanent conveyances, the reader should reference other texts and software for assistance.

2.3.1 Water Quality Design Storm

The design storm for sizing wetpool treatment facilities is the 6-month, 24-hour storm. Unless amended to reflect local precipitation statistics, the 6-month, 24-hour precipitation amount may be assumed to be 72 percent of the 2-year, 24-hour amount. Precipitation estimates of the 6-month and 2-year, 24-hour storms for certain towns and cities are listed in Appendix 1-B of Volume I. For other areas, interpolating between isopluvials for the 2-year, 24-hour precipitation and multiplying by 72% yields the appropriate storm size.

The total depth of rainfall (in tenths of an inch) for storms of 24-hour duration and 2, 5, 10, 25, 50, and 100-year recurrence intervals are published by the National Oceanic and Atmospheric Administration (NOAA). The information is presented in the form of “isopluvial” maps for each state. Isopluvial maps are maps where the contours represent total inches of rainfall for a specific duration. Isopluvial maps for the 2, 5, 10, 25, 50, and 100-year recurrence interval and 24-hour duration storm events can be found in the NOAA Atlas 2, “Precipitation - Frequency Atlas of the Western United States, Volume IX-Washington.” Appendix II-A provides the isopluvials for the 2, 10, and 100-year, 24-hour design storms. Other precipitation frequency data may be obtained through the Western Regional Climate Center (WRCC) at Tel: (775) 674-7010. WRCC can generate 1-30 day precipitation frequency data for the location of interest using data from 1880 to present (currently June 2012).

2.3.2 Runoff Parameters

All storm event hydrograph methods require input of parameters that describe physical drainage basin characteristics. These parameters provide the basis from which the runoff hydrograph is developed. This section describes only the key parameter of curve number that is used to estimate the runoff from the water quality design storm.

Curve Number

The NRCS (formerly SCS) has, for many years, conducted studies of the runoff characteristics for various land types. After gathering and analyzing extensive data, NRCS has developed relationships between land use, soil type, vegetation cover, interception, infiltration, surface storage, and runoff. The relationships have been characterized by a single runoff coefficient called a "curve number." The National Engineering Handbook - Section 4: Hydrology (NEH-4, SCS, August 1972) contains a detailed description of the development and use of the curve number method.

NRCS has developed "curve number" (CN) values based on soil type and land use. They can be found in *Urban Hydrology for Small Watersheds,* Technical Release 55 (TR-55), June 1986, published by the NRCS. The combination of these two factors is called the "soil-cover complex." The soil-cover complexes have been assigned to one of four hydrologic soil groups, according to their runoff characteristics. NRCS has classified over 4,000 soil types into these four soil groups. Table 2.3.1 shows the hydrologic soil group of most soils in the state of Washington and provides a brief description of the four groups. For details on other soil types refer to the NRCS publication mentioned above (TR-55, 1986).

Table 2.3.1
Hydrologic Soil Series for Selected Soils in Washington State

Soil Type	Hydrologic Soil Group	Soil Type	Hydrologic Soil Group
Agnew	C	Hoko	C
Ahl	B	Hoodsport	C
Aits	C	Hoogdal	C
Alderwood	C	Hoypus	A
Arents, Alderwood	B	Huel	A
Arents, Everett	B	Indianola	A
Ashoe	B	Jonas	B
Baldhill	B	Jumpe	B
Barneston	C	Kalaloch	C
Baumgard	B	Kapowsin	C/D
Beausite	B	Katula	C
Belfast	C	Kilchis	C
Bellingham	D	Kitsap	C
Bellingham variant	C	Klaus	C
Boistfort	B	Klone	B
Bow	D	Lates	C
Briscot	D	Lebam	B
Buckley	C	Lummi	D
Bunker	B	Lynnwood	A
Cagey	C	Lystair	B
Carlsborg	A	Mal	C
Casey	D	Manley	B

Table 2.3.1
Hydrologic Soil Series for Selected Soils in Washington State

Soil Type	Hydrologic Soil Group	Soil Type	Hydrologic Soil Group
Cassolary	C	Mashel	B
Cathcart	B	Maytown	C
Centralia	B	McKenna	D
Chehalis	B	McMurray	D
Chesaw	A	Melbourne	B
Cinebar	B	Menzel	B
Clallam	C	Mixed Alluvial	variable
Clayton	B	Molson	B
Coastal beaches	variable	Mukilteo	C/D
Colter	C	Naff	B
Custer	D	Nargar	A
Custer, Drained	C	National	B
Dabob	C	Neilton	A
Delphi	D	Newberg	B
Dick	A	Nisqually	B
Dimal	D	Nooksack	C
Dupont	D	Norma	C/D
Earlmont	C	Ogarty	C
Edgewick	C	Olete	C
Eld	B	Olomount	C
Elwell	B	Olympic	B
Esquatzel	B	Orcas	D
Everett	A	Oridia	D
Everson	D	Orting	D
Galvin	D	Oso	C
Getchell	A	Ovall	C
Giles	B	Pastik	C
Godfrey	D	Pheeney	C
Greenwater	A	Phelan	D
Grove	C	Pilchuck	C
Harstine	C	Potchub	C
Hartnit	C	Poulsbo	C
Hoh	B	Prather	C
Puget	D	Solleks	C
Puyallup	B	Spana	D
Queets	B	Spanaway	A/B
Quilcene	C	Springdale	B
Ragnar	B	Sulsavar	B
Rainier	C	Sultan	C
Raught	B	Sultan variant	B
Reed	D	Sumas	C
Reed, Drained or Protected	C	Swantown	D
Renton	D	Tacoma	D
Republic	B	Tanwax	D
Riverwash	variable	Tanwax, Drained	C
Rober	C	Tealwhit	D
Salal	C	Tenino	C
Salkum	B	Tisch	D
Sammamish	D	Tokul	C
San Juan	A	Townsend	C
Scamman	D	Triton	D
Schneider	B	Tukwila	D
Seattle	D	Tukey	C
Sekiu	D	Urbana	C
Semiahmoo	D	Vailton	B
Shalcar	D	Verlot	C
Shano	B	Wapato	D

Table 2.3.1
Hydrologic Soil Series for Selected Soils in Washington State

Soil Type	Hydrologic Soil Group	Soil Type	Hydrologic Soil Group
Shelton	C	Warden	B
Si	C	Whidbey	C
Sinclair	C	Wilkeson	B
Skipopa	D	Winston	A
Skykomish	B	Woodinville	B
Snahopish	B	Yelm	C
Snohomish	D	Zynbar	B
Solduc	B		

Notes:

Hydrologic Soil Group Classifications, as Defined by the Soil Conservation Service:

A = *(Low runoff potential) Soils having low runoff potential and high infiltration rates, even when thoroughly wetted. They consist chiefly of deep, well to excessively drained sands or gravels and have a high rate of water transmission (greater than 0.30 in/hr.).*

B = *(Moderately low runoff potential). Soils having moderate infiltration rates when thoroughly wetted and consist chiefly of moderately deep to deep, moderately well to well drained soils with moderately fine to moderately coarse textures. These soils have a moderate rate of water transmission (0.15-0.3 in/hr.).*

C = *(Moderately high runoff potential). Soils having low infiltration rates when thoroughly wetted and consist chiefly of soils with a layer that impedes downward movement of water and soils with moderately fine to fine textures. These soils have a low rate of water transmission (0.05-0.15 in/hr.).*

D = *(High runoff potential). Soils having high runoff potential. They have very low infiltration rates when thoroughly wetted and consist chiefly of clay soils with a high swelling potential, soils with a permanent high water table, soils with a hardpan or clay layer at or near the surface, and shallow soils over nearly impervious material. These soils have a very low rate of water transmission (0-0.05 in/hr.).*

* = *From SCS, TR-55, Second Edition, June 1986, Exhibit A-1. Revisions made from SCS, Soil Interpretation Record, Form #5, September 1988 and various county soil surveys.*

Additional Note: Where field infiltration tests indicate a measured (initial) infiltration rate less than 0.30 in/hr, the WWHM user may model the site as a C soil. .

Table 2.3.2 shows the CNs, by land use description, for the four hydrologic soil groups. These numbers are for a 24-hour duration storm and typical antecedent soil moisture condition preceding 24-hour storms.

The following are important criteria/considerations for selection of CN values:

Many factors may affect the CN value for a given land use. For example, the movement of heavy equipment over bare ground may compact the soil so that it has a lesser infiltration rate and greater runoff potential than would be indicated by strict application of the CN value to developed site conditions.

CN values can be area weighted when they apply to pervious areas of similar CNs (within 20 CN points). However, high CN areas should not be combined with low CN areas. In this case, separate estimates of S (potential maximum natural detention) and Q_d (runoff depth) should be generated and summed to obtain the cumulative runoff volume unless the low CN areas are less than 15 percent of the subbasin.

Separate CN values must be selected for the pervious and impervious areas of an urban basin or subbasin. For residential districts the percent

impervious area given in Table 2.3.2 must be used to compute the respective pervious and impervious areas. For proposed commercial areas, planned unit developments, etc., the percent impervious area must be computed from the site plan. For all other land uses the percent impervious area must be estimated from best available aerial topography and/or field reconnaissance. The pervious area CN value must be a weighted average of all the pervious area CNs within the subbasin. The impervious area CN value shall be 98.

Example: The following is an example of how CN values are selected for a sample project.

Select CNs for the following development:

Existing Land Use	-	forest (undisturbed)
Future Land Use	-	residential plat (3.6 DU/GA)
Basin Size	-	60 acres
Soil Type	-	80 percent Alderwood, 20 percent Ragnor

Table 2.3.1 shows that Alderwood soil belongs to the "C" hydrologic soil group and Ragnor soil belongs to the "B" group. Therefore, for the existing condition, CNs of 70 and 55 are read from Table 2.3.2 and areal weighted to obtain a CN value of 67. For the developed condition with 3.6 DU/GA the percent impervious of 39 percent is interpolated from Table 2.3.2 and used to compute pervious and impervious areas of 36.6 acres and 23.4 acres, respectively. The 36.6 acres of pervious area is assumed to be in Fair condition (for a conservative design) with residential yards and lawns covering the same proportions of Alderwood and Ragnor soil (80 percent and 20 percent respectively). Therefore, CNs of 90 and 85 are read from Table 2.3.2 and areal weighted to obtain a pervious area CN value of 89. The impervious area CN value is 98. The result of this example is summarized below:

On-Site Condition	Existing	Developed
Land use	Forest	Residential
Pervious area	60 ac.	36.6 ac.
CN of pervious area	67	89
Impervious area	0 ac.	23.4 ac.
CN of impervious area	--	98

Table 2.3.2
Runoff Curve Numbers for Selected Agricultural, Suburban, and Urban Areas

(Sources: TR 55, 1986, and Stormwater Management Manual, 1992. See Section 2.1.1 for explanation)

Cover type and hydrologic condition.	CNs for hydrologic soil group A	B	C	D
Curve Numbers for Pre-Development Conditions				
Pasture, grassland, or range-continuous forage for grazing:				
Fair condition (ground cover 50% to 75% and not heavily grazed).	49	69	79	84
Good condition (ground cover >75% and lightly or only occasionally grazed)	39	61	74	80
Woods:				
Fair (Woods are grazed but not burned, and some forest litter covers the soil).	36	60	73	79
Good (Woods are protected from grazing, and litter and brush adequately cover the soil).	30	55	70	77
Curve Numbers for Post-Development Conditions				
Open space (lawns, parks, golf courses, cemeteries, landscaping, etc.)[1]				
Fair condition (grass cover on 50% - 75% of the area).	77	85	90	92
Good condition (grass cover on >75% of the area)	68	80	86	90
Impervious areas:				
Open water bodies: lakes, wetlands, ponds etc.	100	100	100	100
Paved parking lots, roofs[2], driveways, etc. (excluding right-of-way)	98	98	98	98
Permeable Pavement (See Appendix C to decide which condition below to use)				
Landscaped area	77	85	90	92
50% landscaped area/50% impervious	87	91	94	96
100% impervious area	98	98	98	98
Paved	98	98	98	98
Gravel (including right-of-way)	76	85	89	91
Dirt (including right-of-way)	72	82	87	89
Pasture, grassland, or range-continuous forage for grazing:				
Poor condition (ground cover <50% or heavily grazed with no mulch).	68	79	86	89
Fair condition (ground cover 50% to 75% and not heavily grazed).	49	69	79	84
Good condition (ground cover >75% and lightly or only occasionally grazed)	39	61	74	80
Woods:				
Poor (Forest litter, small trees, and brush are destroyed by heavy grazing or regular burning).	45	66	77	83
Fair (Woods are grazed but not burned, and some forest litter covers the soil).	36	60	73	79
Good (Woods are protected from grazing, and litter and brush adequately cover the soil).	30	55	70	77

Single family residential[3]**:** Dwelling Unit/Gross Acre	Should only be used for subdivisions > 50 acres	Average Percent impervious area[3,4]	
1.0 DU/GA		15	Separate curve number
1.5 DU/GA		20	shall be selected for
2.0 DU/GA		25	pervious & impervious
2.5 DU/GA		30	portions of the site or
3.0 DU/GA		34	basin
3.5 DU/GA		38	
4.0 DU/GA		42	
4.5 DU/GA		46	
5.0 DU/GA		48	
5.5 DU/GA		50	
6.0 DU/GA		52	
6.5 DU/GA		54	
7.0 DU/GA		56	
7.5 DU/GA		58	
PUD's, condos, apartments, commercial businesses, industrial areas & & subdivisions < 50 acres	%impervious must be computed	Separate curve numbers shall be selected for pervious and impervious portions of the site	

For a more detailed and complete description of land use curve numbers refer to chapter two (2) of the Soil Conservation Service's Technical Release No. 55 , (210-VI-TR-55, Second Ed., June 1986).

[1] Composite CN's may be computed for other combinations of open space cover type.

[2] Where roof runoff and driveway runoff are infiltrated or dispersed according to the requirements in Chapter 3, the average percent impervious area may be adjusted in accordance with the procedure described under "Flow Credit for Roof Downspout Infiltration" (Section 3.1.1), and "Flow Credit for Roof Downspout Dispersion" (Section 3.1.2).

[3] Assumes roof and driveway runoff is directed into street/storm system.

[4] All the remaining pervious area (lawn) are considered to be in good condition for these curve numbers.

NRCS Curve Number Equations for determination of runoff depths and volumes

The rainfall-runoff equations of the NRCS curve number method relates a land area's runoff depth (precipitation excess) to the precipitation it receives and to its natural storage capacity, as follows:

$$Q_d = (P - 0.2S)^2 / (P + 0.8S) \qquad \text{for } P \geq 0.2S$$

and $$Q_d = 0 \qquad \text{for } P < 0.2S$$

Where:

Q_d = runoff depth in inches over the area,
P = precipitation depth in inches over the area, and
S = potential maximum natural detention, in inches over the area, due to infiltration, storage, etc.

The area's potential maximum detention, S, is related to its curve number, CN:

$$S = (1000 / CN) - 10$$

The combination of the above equations allows for estimation of the total runoff volume by computing total runoff depth, Q_d, given the total precipitation depth, P. For example, if the curve number of the area is 70, then the value of S is 4.29. With a total precipitation for the design event of 2.0 inches, the total runoff depth would be:

$$Q_d = [2.0 - 0.2\,(4.29)]^2 / [2.0 + 0.8\,(4.29)] = 0.24 \text{ inches}$$

This computed runoff represents inches over the tributary area. Therefore, the total volume of runoff is found by multiplying Q_d by the area (with necessary conversions):

Calculating the design volume for wetpool treatment facilities

Total runoff Volume (cu. ft.)	=	3,630 (cu. ft./ac. in.)	x	Q_d (in)	x	A (ac)

If the area is 10 acres, the total runoff volume is:

3,630 cu. ft./ac. in. x 0.24 in. x 10 ac. = 8,712 cu. ft.

This is the design volume for treatment BMPs for which the design criterion is based on the volume of runoff.

2.4 Closed Depression Analysis

The analysis of closed depressions requires careful assessment of the existing hydrologic performance in order to evaluate the impacts a proposed project will have. The applicable requirements (see Minimum Requirement #7) and the local government's Sensitive Areas Ordinance and Rules (if applicable) should be thoroughly reviewed prior to proceeding with the analysis.

Closed depressions generally facilitate infiltration of runoff. If a closed depression is classified as a wetland, then the Minimum Requirement #8 for wetlands applies. If there is an outflow from this wetland to a surface water (such as a creek), then the flow from this wetland must also meet the Minimum Requirement #7 for flow control. A calibrated continuous simulation hydrologic model must be used for closed depression analysis and design of mitigation facilities. If a closed depression is not classified as a wetland, model the ponding area at the bottom of the closed depression as an infiltration pond using WWHM or an approved equivalent runoff model.

This page purposely left blank

Chapter 3 - Flow Control Design

Note: Figures in Chapter 3 courtesy of King County, except as noted

This chapter presents methods, criteria, and details for hydraulic analysis and design of flow control facilities and roof downspout controls. Flow control facilities are detention or infiltration facilities engineered to meet the flow control standards specified in Volume I. Roof downspout controls include infiltration trenches, dry wells, and partial dispersion systems for use in individual lots, proposed plats, and short plats. Roof downspout controls are used in conjunction with, and in addition to, any flow control facilities that may be necessary. They are included in the list of BMPs to consider for compliance with Minimum Requirement #5. Implementation of roof downspout controls may reduce the total effective impervious area and result in less runoff from these surfaces. Ecology's Western Washington Hydrology Model (WWHM) incorporates flow credits for implementing two types of roof downspout controls. These are:

- If roof runoff is ***infiltrated*** according to the requirements of this section, the roof area may be discounted from the total project area used for sizing stormwater facilities.
- If roof runoff is ***dispersed*** according to the requirements of this section on single-family lots greater than 22,000 square feet, and the *vegetative flow*[*] path is 50 feet or larger through un***disturbed*** native landscape or lawn/landscape area that meets BMP T5.13, the roof area may be modeled as grassed surface.

This chapter also provides design procedures, criteria, and field tests methods concerning infiltration facilities used for flow control or treatment. Section 3.4 covers design of bioretention and permeable pavement facilities. Additional design considerations for bioretention facilities, a type of infiltration design, are covered in Chapter 7 of Volume V.

3.1 Roof Downspout Controls

This section presents the criteria for design and implementation of roof downspout controls. Roof downspout controls are simple pre-engineered designs for infiltrating and/or dispersing runoff from roof areas for the purposes of increasing opportunities for ground water recharge and reduction of runoff volumes from new developments.

Selection of Roof Downspout

Large lots in rural areas (5 acres or greater) typically have enough area to disperse or infiltrate roof runoff. Lots created in urban areas will typically be smaller (about 8,000 square feet) and have a limited

[*] *Vegetative flow* path is measured from the downspout or dispersion system discharge point to the downstream property line, stream, wetland, or other impervious surface.

Controls

amount of area in which to site infiltration or dispersion trenches. Downspout infiltration should be used in those soils that readily infiltrate. Dispersion BMPs should be used for urban lots located in less permeable soils, where infiltration is not feasible. Where dispersion is not feasible because of very small lot size, or where there is a potential for creating drainage problems on adjacent lots, connect downspouts with perforated stub-out connections to the street storm drain system, which directs the runoff to a stormwater management facility.

Where roof downspout controls are planned, the following types must be considered in descending order of preference:

1. Full Dispersion in accordance with BMP T5.30 in Chapter 5 of Volume V, or Downspout Full Infiltration Systems in accordance with BMP T5.10A in Chapter 5 of Volume V. ~~Section 3.1.1.~~
2. Rain Gardens in accordance with BMP T5.14A in Chapter 5 of Volume V ~~the "Rain Garden Handbook for Western Washington;"~~ ,or if the project area is subject to Minimum Requirements #6 and/or #7, Bioretention ~~BMPs~~ in accordance with BMP T7.30 in Chapter 7 of Volume V.
3. Downspout Dispersion Systems in accordance with BMP T5.10B in Section 3.1.2.
4. Perforated Stub-out Connections in accordance with BMP T5.10C in Section 3.1.3.

Figure 3.1.1 illustrates, in general, how roof downspout controls are selected and applied in single-family subdivision projects. Where supported by appropriate soil infiltration tests, downspout full infiltration in finer soils may be practical using a larger infiltration system.

Roof downspout controls can be applied to individual commercial lot developments when the percent impervious area and pollutant characteristics are comparable to those from residential lots.

Note: Other innovative downspout control BMPs such as rain barrels, ornamental ponds, downspout cisterns, or other downspout water storage devices may be used to supplement any of the above BMPs if approved by the reviewing authority.

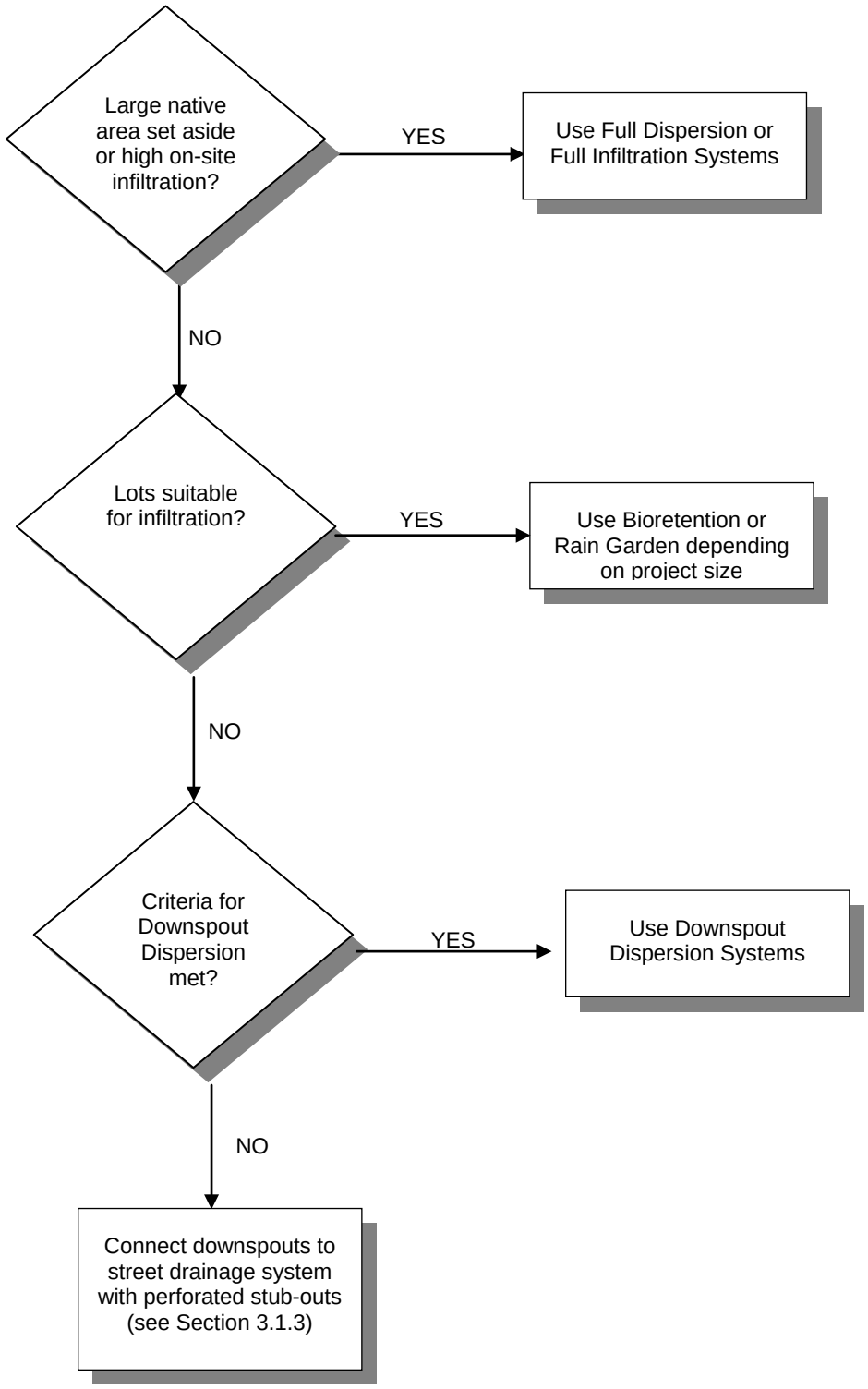

Figure 3.1.1 - Flow Diagram Showing Selection of Roof Downspout Controls

3.1.1 Downspout Full Infiltration Systems (BMP T5.10A)

Downspout full infiltration systems are trench or drywell designs intended only for use in infiltrating runoff from roof downspout drains. They are not designed to directly infiltrate runoff from pollutant-generating impervious surfaces.

Application

Projects subject to Minimum Requirement #5 (Section 2.5.5, Volume I) must provide for individual downspout full infiltration systems or full dispersion if feasible. Evaluate the feasibility, or applicability, of downspout full infiltration unless full dispersion is proposed. Use the evaluation procedure below to determine the feasibility of downspout full infiltration.

Flow Credit for Roof Downspout Full Infiltration

If roof runoff is infiltrated according to the requirements of this section, the roof area may be discounted from the project area used for sizing stormwater facilities.

Procedure for Evaluating Feasibility

1. Have one of the following prepare a soils report to determine if soils suitable for infiltration are present on the site:
   - A professional soil scientist certified by the Soil Science Society of America (or an equivalent national program)
   - A locally licensed on-site sewage designer
   - A suitably trained person working under the supervision of a professional engineer, geologist, hydrogeologist, or engineering geologist registered in the State of Washington.

   The report shall reference a sufficient number of soils logs to establish the type and limits of soils on the project site. The report should at a minimum identify the limits of any outwash type soils (i.e., those meeting USDA soil texture classes ranging from coarse sand and cobbles to medium sand) versus other soil types and include an inventory of topsoil depth.
2. If the lots or site does not have outwash or loam soils, and full dispersion is not feasible, then consider a rain garden or bioretention BMPs (the next lower priority on-site stormwater management system).
3. Complete additional site-specific testing on lots or sites containing outwash (coarse sand and cobbles to medium sand) and loam type soils.

   Individual lot or site tests must consist of at least one soils log at the location of the infiltration system, a minimum of 4 feet in depth from the proposed grade and at least 1 foot below the expected bottom elevation of the infiltration trench or dry well.

Identify the NRCS series of the soil and the USDA textural class of the soil horizon through the depth of the log, and note any evidence of high ground water level, such as mottling.

4. Downspout infiltration is considered feasible on lots or sites that meet all of the following:
   - 3 feet or more of permeable soil from the proposed final grade to the seasonal high ground water table.
   - At least 1-foot of clearance from the expected bottom elevation of the infiltration trench or dry well to the seasonal high ground water table.
   - The downspout full infiltration system can be designed to meet the minimum design criteria specified below.

Design Criteria for Infiltration Trenches

Figure 3.1.2 shows a typical downspout infiltration trench system, and Figure 3.1.3 presents an alternative infiltration trench system for sites with coarse sand and cobble soils. These systems are designed as specified below.

General

1. The following minimum lengths (linear feet) per 1,000 square feet of roof area based on soil type may be used for sizing downspout infiltration trenches.

Coarse sands and cobbles	20 LF
Medium sand	30 LF
Fine sand, loamy sand	75 LF
Sandy loam	125 LF
Loam	190 LF

2. Maximum length of trench shall not exceed 100 feet from the inlet sump.
3. Minimum spacing between trench centerlines shall be 6 feet.
4. Filter fabric shall be placed over the drain rock as shown on Figure 3.1.2 prior to backfilling.
5. Infiltration trenches may be placed in fill material if the fill is placed and compacted under the direct supervision of a geotechnical engineer or professional civil engineer with geotechnical expertise, and if the measured infiltration rate is at least 8 inches per hour. Trench length in fill must be 60 linear feet per 1,000 square feet of roof area. Infiltration rates can be tested using the methods described in Section 3.3.
6. Infiltration trenches should not be built on slopes steeper than 25% (4:1). A geotechnical analysis and report may be required on slopes over 15 percent or if located within 200 feet of the top of slope steeper than 40%, or in a landslide hazard area.

7. Trenches may be located under pavement if a small yard drain or catch basin with grate cover is placed at the end of the trench pipe such that overflow would occur out of the catch basin at an elevation at least one foot below that of the pavement, and in a location which can accommodate the overflow without creating a significant adverse impact to downhill properties or drainage systems. This is intended to prevent saturation of the pavement in the event of system failure.

Design Criteria for Infiltration Drywells

Figure 3.1.4 shows a typical downspout infiltration drywell system. These systems are designed as specified below.

General

1. Drywell bottoms must be a minimum of 1 foot above seasonal high ground water level or impermeable soil layers.
2. When located in course sands and cobbles, drywells must contain a volume of gravel equal to or greater than 60 cubic feet per 1000 square feet of impervious surface served. When located in medium sands, drywells must contain at least 90 cubic feet of gravel per 1,000 square feet of impervious surface served.
3. Drywells must be at least 48 inches in diameter (minimum) and deep enough to contain the gravel amounts specified above for the soil type and impervious surface served.
4. Filter fabric (geotextile) must be placed on top of the drain rock and on trench or drywell sides prior to backfilling.
5. Spacing between drywells must be a minimum of 10 feet.
6. Downspout infiltration drywells must not be built on slopes greater than 25% (4:1). Drywells may not be placed on or above a landslide hazard area or on slopes greater than 15% without evaluation by a professional engineer with geotechnical expertise or a licensed geologist, hydrogeologist, or engineering geologist, and with jurisdiction approval.

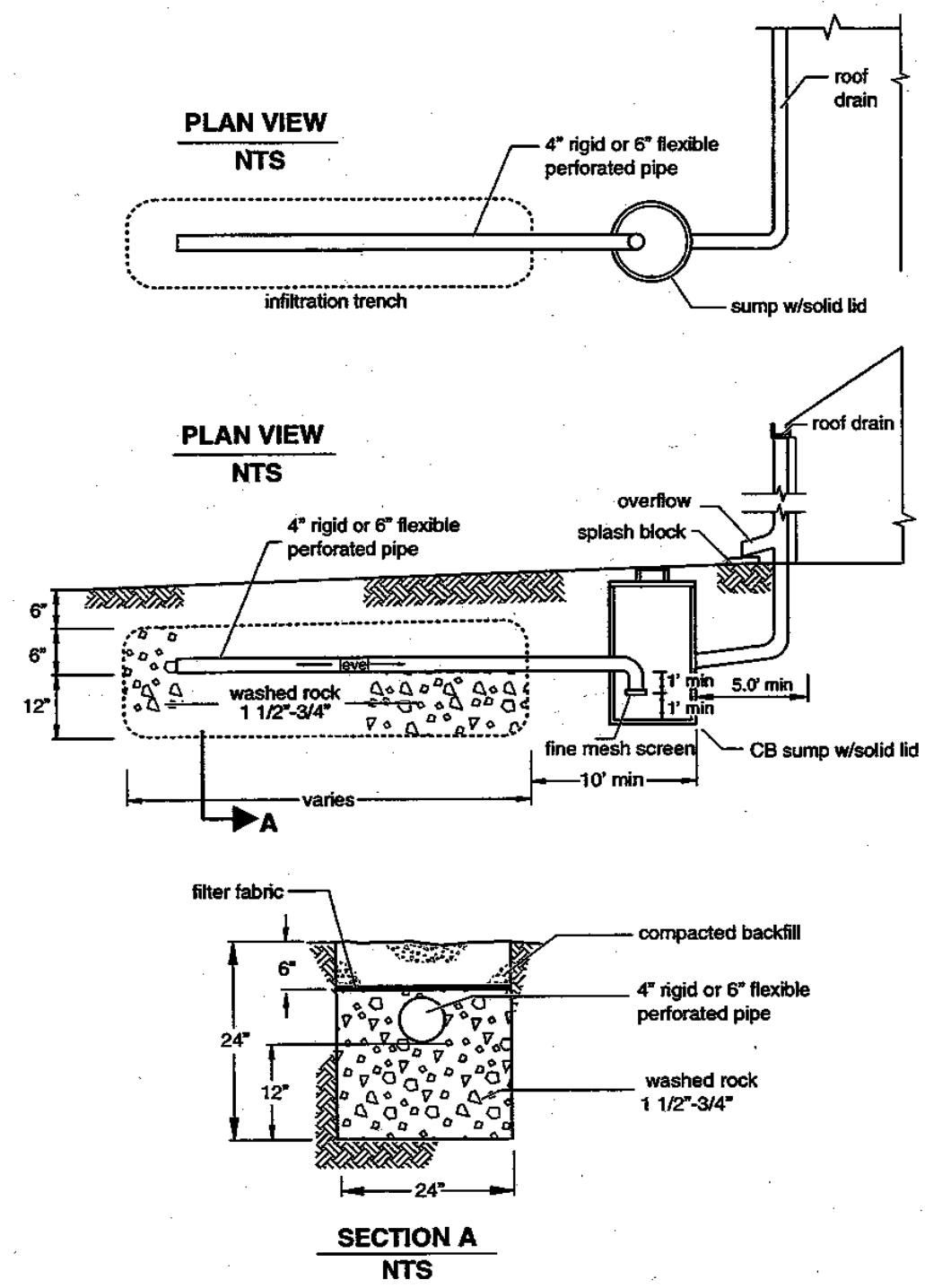

Figure 3.1.2 - Typical Downspout Infiltration Trench

Source: King County

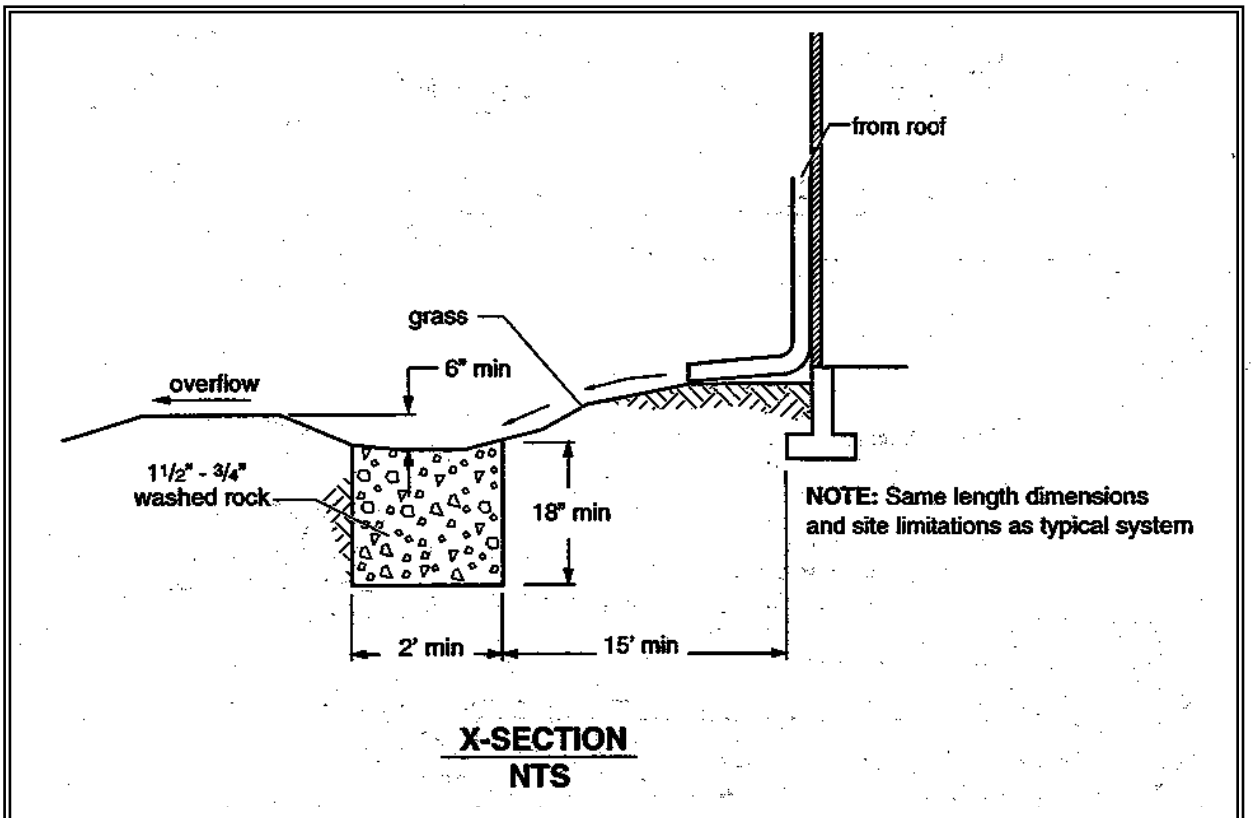

Figure 3.1.3 - Alternative Downspout Infiltration Trench System for Coarse Sand and Gravel

Source: King County

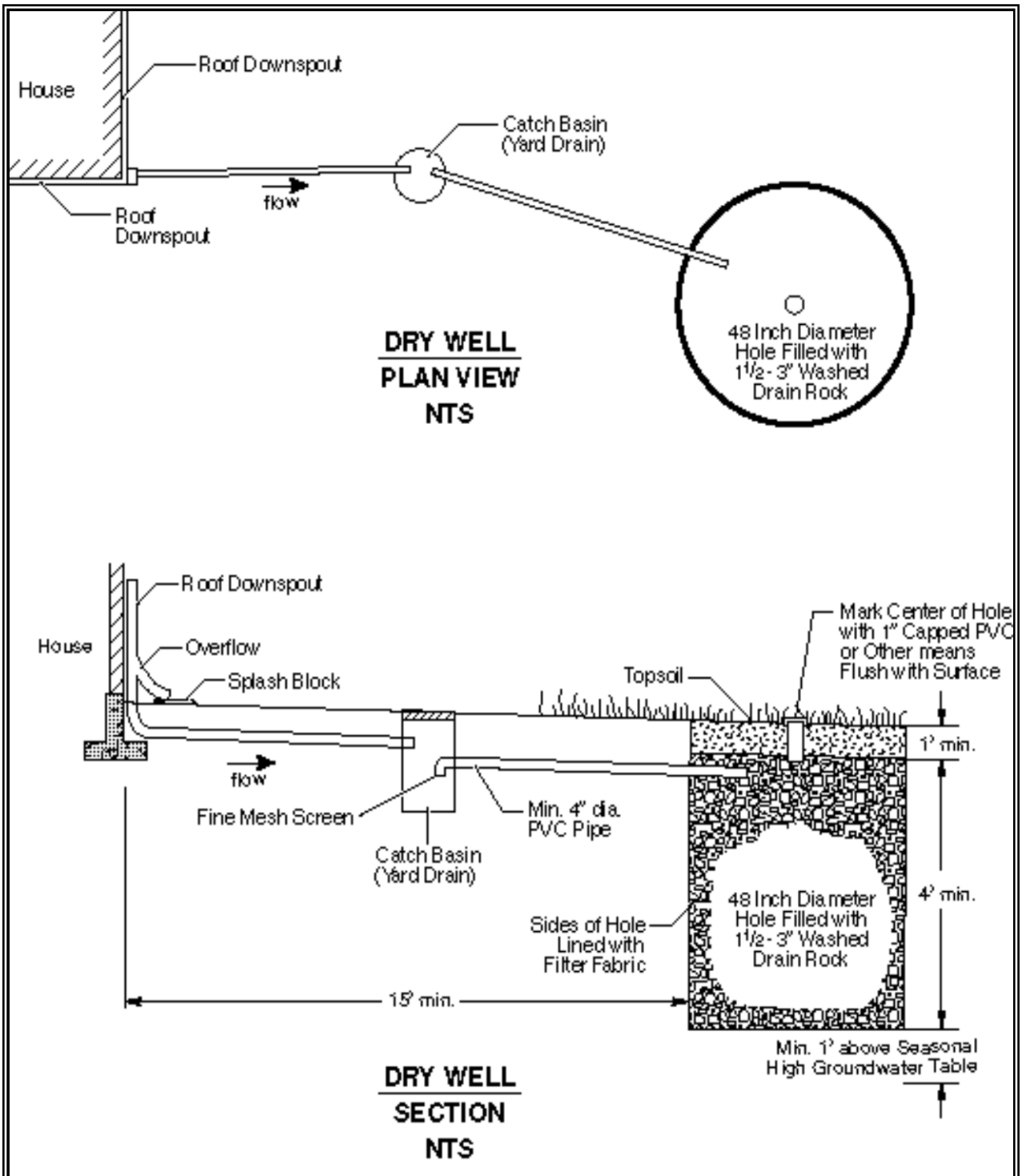

Figure 3.1.4 - Typical Downspout Infiltration Drywell

Source: King County

Setbacks

Local governments may require specific setbacks in sites with slopes over 40%, land slide areas, open water features, springs, wells, and septic tank drain fields. Adequate room for maintenance access and equipment should also be considered. Examples of setbacks commonly used include the following:

1. All infiltration systems should be at least 10 feet from any structure, property line, or sensitive area (except slopes over 40%).
2. All infiltration systems must be at least 50 feet from the top of any slope over 40%. This setback may be reduced to 15 feet based on a geotechnical evaluation, but in no instances may it be less than the buffer width.
3. For sites with septic systems, infiltration systems must be downgradient of the drainfield unless the site topography clearly prohibits subsurface flows from intersecting the drainfield.

3.1.2 Downspout Dispersion Systems (BMP T5.10B)

Downspout dispersion systems are splash blocks or gravel-filled trenches, which serve to spread roof runoff over vegetated pervious areas. Dispersion attenuates peak flows by slowing the runoff entering into the conveyance system, allowing some infiltration, and providing some water quality benefits.

Applications & Limitations

Downspout dispersion may be used in all subdivision lots where downspout full infiltration, full dispersion, and bioretention/rain gardens are not feasible.

Flow Credit for Roof Downspout Dispersion

In WWHM~~3~~, roof areas may be modeled as grassed surfaces (landscape) if roof runoff is dispersed according to the requirements of this section on lots greater than 22,000 square feet, and the ~~*vegetative flow*~~* vegetated flow-path is 50 feet or larger through undisturbed native landscape or lawn/landscape area that meets BMP T5.13. If the available vegetated flowpath is 25 to 50 feet, use of a dispersion trench allows modeling the roof as 50% impervious/50% landscape. This is done in WWHM on the Mitigated Scenario screen by entering the roof area into one of the entry options for dispersal of impervious area runoff. For WWHM-2012, see Appendix III-C in this Volume.

Design Criteria

1. Use downspout trenches designed as shown in Figures 3.1.5 and 3.1.6 for all downspout dispersion applications except where splash blocks are allowed below.
2. Splash blocks shown in Figure 3.1.7 may be used for downspouts discharging to a vegetated flowpath at least 50 feet in length as measured from the downspout to the downstream property line, structure, slope over 15%, stream, wetland, or other impervious surface. Sensitive area buffers may count toward flowpath lengths.
3. Cover the vegetated flowpath with well-established lawn or pasture, landscaping with well-established groundcover, or native vegetation with natural groundcover. The groundcover shall be dense enough to help disperse and infiltrate flows and to prevent erosion.
4. If the vegetated flowpath (measured as defined above) is less than 25 feet, a perforated stub-out connection per Section 3.1.3 may be used in lieu of downspout dispersion. A perforated stub-out may also be used where implementation of downspout dispersion might cause erosion or flooding problems, either on site or on adjacent lots. For example, this provision might be appropriate for lots constructed on steep hills where downspout discharge could culminate and might pose a potential hazard for lower lying lots, or where dispersed flows could create problems for

~~* *Vegetative flow* path is measured from the downspout or dispersion system discharge point to the downstream property line, stream, wetland, or other impervious surface.~~

adjacent off-site lots. This provision does not apply to situations where lots are flat and on-site downspout dispersal would result in saturated yards. Perforated stub-outs are not appropriate when seasonal water table is <1 foot below trench bottom.

Note: For all other types of projects, the use of a perforated stub-out in lieu of downspout dispersion shall be as determined by the Local Plan Approval Authority.

5. For sites with septic systems, the discharge point of all dispersion systems must be downgradient of the drainfield. This requirement may be waived if site topography clearly prohibits flows from intersecting the drainfield.

Design Criteria for Dispersion Trenches

1. A vegetated flowpath of at least 25 feet in length must be maintained between the outlet of the trench and any property line, structure, stream, wetland, or impervious surface. A vegetated flowpath of at least 50 feet in length must be maintained between the outlet of the trench and any slope steeper than 15%. Sensitive area buffers may count towards flowpath lengths.
2. Trenches serving up to 700 square feet of roof area may be simple 10-foot-long by 2-foot wide gravel filled trenches as shown in Figure 3.1.5. For roof areas larger than 700 square feet, a dispersion trench with notched grade board as shown in Figure 3.1.6 or alternative material approved by the Local Plan Approval Authority may be used. The total length of this design must not exceed 50 feet and must provide at least 10 feet of trench per 700 square feet of roof area.
3. Maintain a setback of at least 5 feet between any edge of the trench and any structure or property line.
4. No erosion or flooding of downstream properties may result.
5. Have a geotechnical engineer or a licensed geologist, hydrogeologist, or engineering geologist evaluate runoff discharged towards landslide hazard areas. Don not place the discharge point on or above slopes greater than 15% or above erosion hazard areas without evaluation by a geotechnical engineer or qualified geologist and jurisdiction approval.
6. For purposes of maintaining adequate separation of flows discharged from adjacent dispersion devices, the outer edge of the vegetated flowpath segment for the dispersion trench must not overlap with other flowpath segments, except those associated with sheet flow from a non-native pervious surface.

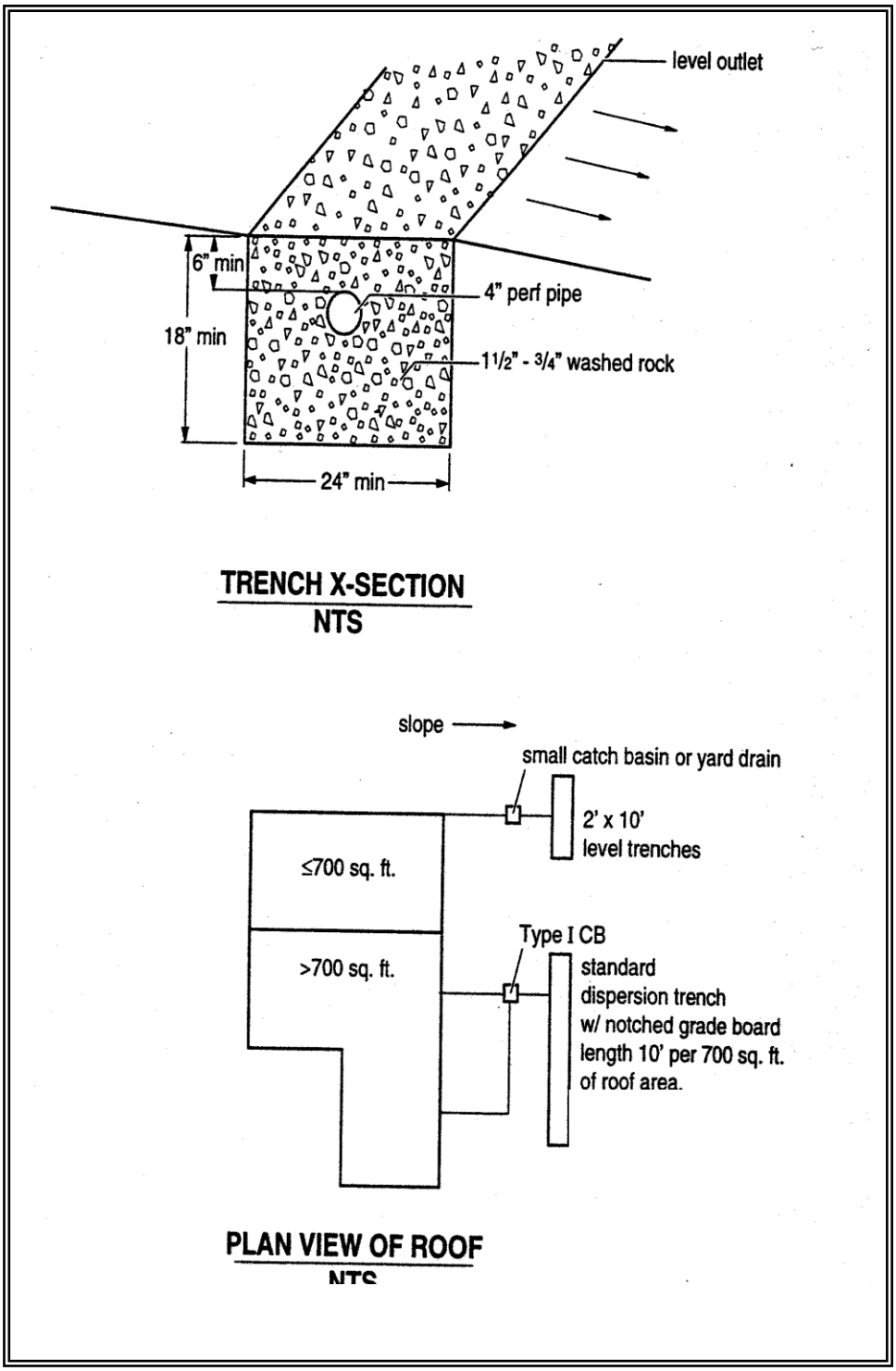

Figure 3.1.5 - Typical Downspout Dispersion Trench

Source: King County

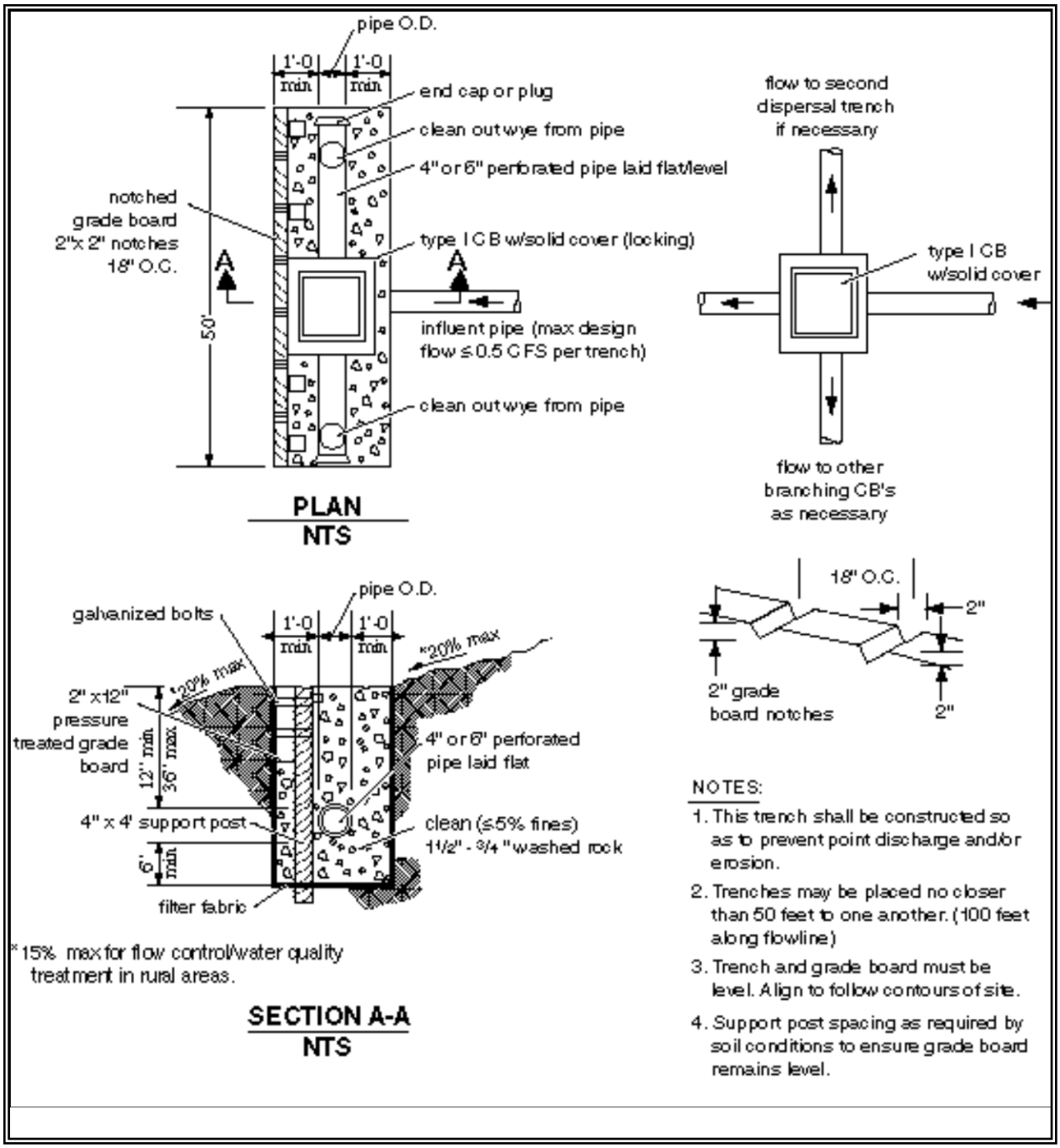

Figure 3.1.6 - Standard Dispersion Trench with Notched Grade Board

Design Criteria for Splashblocks

A typical downspout splashblock is shown in Figure 3.1.7. In general, if the ground is sloped away from the foundation and there is adequate vegetation and area for effective dispersion, splashblocks will adequately disperse storm runoff. If the ground is fairly level, if the structure includes a basement, or if foundation drains are proposed, splashblocks with downspout extensions may be a better choice because the discharge point is moved away from the foundation. Downspout extensions can include piping to a splashblock/discharge point a considerable distance from the downspout, as long as the runoff can travel through a well-vegetated area as described below.

The following apply to the use of splashblocks:

1. Maintain a vegetated flowpath of at least 50 feet between the discharge point and any property line, structure, slope steeper than 15%, stream, wetland, lake, or other impervious surface. Sensitive area buffers may count toward flowpath lengths.
2. A maximum of 700 square feet of roof area may drain to each splashblock.
3. For purposes of maintaining adequate separation of flows discharged from adjacent dispersion devices, the vegetated flowpath segment for the splashblock must not overlap with other flowpath segments, except those associated with sheet flow from a non-native pervious surface.
4. Place a splashblock or a pad of crushed rock (2 feet wide by 3 feet long by 6 inches deep) at each downspout discharge point.
5. No erosion or flooding of downstream properties may result.
6. Have a geotechnical engineer or a licensed geologist, hydrogeologist, or engineering geologist evaluate runoff discharged towards landslide hazard areas. Do not place Splashblocks on or above slopes greater than 15% or above erosion hazard areas without evaluation by a professional engineer with geotechnical expertise or a licensed geologist, hydrogeologist, or engineering geologist, and approval by the Local Plan Approval Authority.
7. For sites with septic systems, the discharge point must be downslope of the primary and reserve drainfield areas. This requirement may be waived if site topography clearly prohibits flows from intersecting the drainfield or where site conditions (soil permeability, distance between systems, etc) indicate that this is unnecessary.

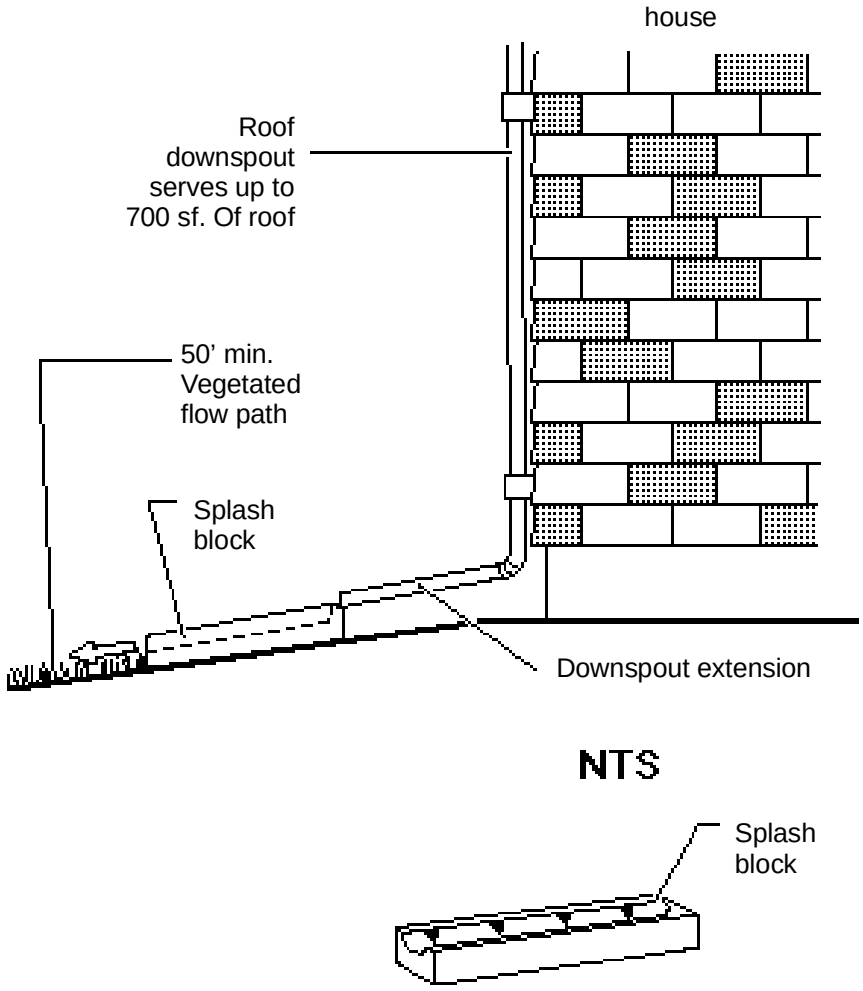

Figure 3.1.7 - Typical Downspout Splashblock Dispersion

3.1.3 Perforated Stub-Out Connections (BMP T5.10C)

A perforated stub-out connection is a length of perforated pipe within a gravel-filled trench that is placed between roof downspouts and a stub-out to the local drainage system. Figure 3.1.8 illustrates a perforated stub-out connection. These systems are intended to provide some infiltration during drier months. During the wet winter months, they may provide little or no flow control.

Applications & Limitations

Perforated stub-outs are not appropriate when seasonal water table is less than one foot below trench bottom.

In projects subject to Minimum Requirement #5 (see Volume I), perforated stub-out connections may be used only when all other higher priority on-site stormwater management BMPs are not feasible, per the criteria for each of those BMPs.

Select the location of the connection to allow a maximum amount of runoff to infiltrate into the ground (ideally a dry, relatively well drained, location). To facilitate maintenance, do not locate the perforated pipe portion of the system under impervious or heavily compacted (e.g., driveways and parking areas) surfaces.Use the same setbacks as for infiltration trenches in Section 3.1.1.

Have a licensed geologist, hydrogeologist, or engineering geologist evaluate potential runoff discharges towards landslide hazard areas. Do not place the perforated portion of the pipe on or above slopes greater than 20% or above erosion hazard areas without evaluation by a professional engineer with geotechnical expertise or qualified geologist and jurisdiction approval.

For sites with septic systems, the perforated portion of the pipe must be downgradient of the drainfield primary and reserve areas. This requirement can be waived if site topography will clearly prohibit flows from intersecting the drainfield or where site conditions (soil permeability, distance between systems, etc) indicate that this is unnecessary.

Design Criteria

Perforated stub-out connections consist of at least 10 feet of perforated pipe per 5,000 square feet of roof area laid in a level, 2-foot wide trench backfilled with washed drain rock. Extend the drain rock to a depth of at least 8 inches below the bottom of the pipe and cover the pipe. Lay the pipe level and cover the rock trench with filter fabric and 6 inches of fill (see Figure 3.1.8).

Runoff Model Representation

Any flow reduction is variable and unpredictable. No computer modeling techniques are allowed that would predict any reduction in flow rates and volumes from the connected area.

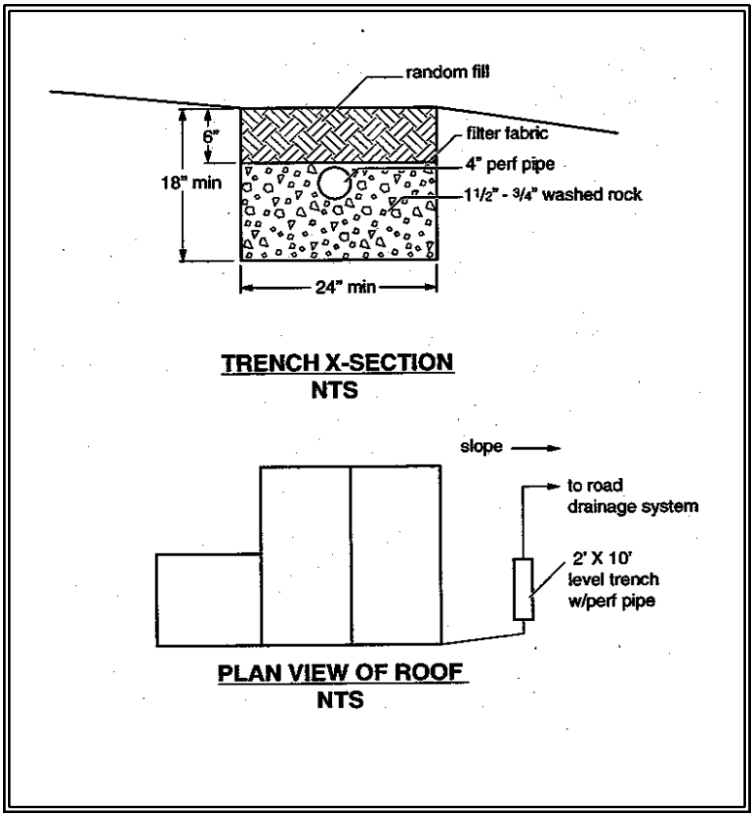

Source: King County

Figure 3.1.8 - Perforated Stub-Out Connection

3.2 Detention Facilities

This section presents the methods, criteria, and details for design and analysis of detention facilities. These facilities provide for the temporary storage of increased surface water runoff resulting from development pursuant to the performance standards set forth in Minimum Requirement #7 for flow control (Volume I).

There are three primary types of detention facilities described in this section: detention ponds, tanks, and vaults.

3.2.1 Detention Ponds

The design criteria in this section are for detention ponds. However, many of the criteria also apply to infiltration ponds (Section 3.3 and Volume V), and water quality wetponds and combined detention/wetponds (Volume V).

Dam Safety for Detention BMPs

Stormwater detention facilities that can impound 10 acre-feet (435,600 cubic feet; 3.26 million gallons) or more with the water level measured at the embankment crest are subject to the state's dam safety requirements, even if water storage is intermittent and infrequent (WAC 173-175-020(1)). The principal safety concern is for the downstream population at risk if the dam should breach and allow an uncontrolled release of the pond contents. Peak flows from dam failures are typically much larger than the 100-year flows which these ponds are typically designed to accommodate.

The Dam Safety Office of the Department of Ecology uses consequence dependent design levels for critical project elements. There are eight design levels with storm recurrence intervals ranging from 1 in 500 for design step, 1 to 1 in 1,000,000 for design step 8. The specific design step for a particular project depends on the downstream population and other resources that would be at risk from a failure of the dam. Precipitation events more extreme than the 100-year event may be rare at any one location, but have historically occurred somewhere within Washington State every few years on average.

With regard to the engineering design of stormwater detention facilities, the primary effect of the state's dam safety requirements is in sizing the emergency spillway to accommodate the runoff from the dam safety design storm without overtopping the dam. The hydrologic computation procedures are the same as for the original pond design, except that the computations must use more extreme precipitation values and the appropriate dam safety design storm hyetographs. This information is described in detail within guidance documents developed by and available from the Dam Safety Office. In addition to the other design requirements for stormwater detention BMPs described elsewhere in this manual, dam safety requirements should be an integral part of planning and design for

stormwater detention ponds. It is most cost-effective to consider these requirements right from the beginning of the project.

In addition to the hydrologic and hydraulic issues related to precipitation and runoff, other dam safety requirements include geotechnical issues, construction inspection and documentation, dam breach analysis, inundation mapping, emergency action planning, and periodic inspections by project owners and by Dam Safety engineers. All of these requirements, plus procedural requirements for plan review and approval and payment of construction permit fees are described in detail in guidance documents developed by and available from the Dam Safety Office.

In addition to the written guidance documents, Dam Safety engineers are available to provide technical assistance to project owners and design engineers in understanding and addressing the dam safety requirements for their specific project. In the interest of providing a smooth integration of dam safety requirements into the stormwater detention project and streamlining Dam Safety's engineering review and issuance of the construction permit, it is recommended and requested that Dam Safety be contacted early in the facilities planning process. The Dam Safety Office is located in the Ecology headquarters building in Lacey. Electronic versions of the guidance documents in PDF format are available on the Department of Ecology Web site at http://www.ecy.wa.gov/programs/wr/dams/dss.html.

Design Criteria

Standard details for detention ponds are shown in Figure 3.2.1 through Figure 3.2.3. Control structure details are provided in Section 3.2.4.

General

1. Ponds must be designed as flow-through systems (however, parking lot storage may be utilized through a back-up system; see Section 3.2.5). Developed flows must enter through a conveyance system separate from the control structure and outflow conveyance system. Maximizing distance between the inlet and outlet is encouraged to promote sedimentation.
2. Pond bottoms should be level and be located a minimum of 0.5 foot (preferably 1 foot) below the inlet and outlet to provide sediment storage.
3. Design guidelines for outflow control structures are specified in Section 3.2.4.
4. A geotechnical analysis and report must be prepared for slopes over 15%, or if located within 200 feet of the top of a slope steeper than 40%, or landslide hazard area. The scope of the geotechnical report should include the assessment of impoundment seepage on the stability of the natural slope where the facility will be located within the setback limits set forth in this section.

Side Slopes

1. Interior side slopes up to the emergency overflow water surface should not be steeper than 3H:1V unless a fence is provided (see "Fencing").
2. Exterior side slopes must not be steeper than 2H:1V unless analyzed for stability by a geotechnical engineer.
3. Pond walls may be vertical retaining walls, provided:
   - They are constructed of reinforced concrete per Section 3.2.3, Material.
   - A fence is provided along the top of the wall.
   - The entire pond perimeter may be retaining walls, however, it is recommended that at least 25 percent of the pond perimeter be a vegetated soil slope not steeper than 3H:1V.If the entire pond perimeter is to be retaining walls, provide ladders on the walls for safety reasons.
   - The design is stamped by a licensed civil engineer with structural expertise.

   Other retaining walls such as rockeries, concrete, masonry unit walls, and keystone type wall may be used if designed by a geotechnical engineer or a civil engineer with structural expertise.

Embankments

1. Have a professional engineer with geotechnical expertise design pond berm embankments higher than 6 feet.
2. For berm embankments 6 feet or less, the minimum top width should be 6 feet or as recommended by a geotechnical engineer.
3. Construct pond berm embankments on native consolidated soil (or adequately compacted and stable fill soils analyzed by a geotechnical engineer) free of loose surface soil materials, roots, and other organic debris.
4. Construct pond berm embankments greater than 4 feet in height by excavating a key equal to 50 percent of the berm embankment cross-sectional height and width, unless specified otherwise by a geotechnical engineer.
5. Embankment compaction should be accomplished in such a manner as to produce a dense, low permeability engineered fill that can tolerate post-construction settlements with a minimum of cracking. Place the embankment fill on a stable subgrade and compact to a minimum of 95% of the Standard Proctor Maximum Density, ASTM Procedure D698. Placement moisture content should lie within 1% dry to 3% wet of the optimum moisture content. The referenced compaction standard may have to be increased to comply with local regulations.

Construct the berm embankment of soils with the following characteristics: a minimum of 20% silt and clay, a maximum of 60% sand, a maximum of 60% silt, with nominal gravel and cobble content. Soils outside this specified range can be used, provided the design satisfactorily addresses the engineering concerns posed by these soils. The paramount concerns with these soils are their susceptibility to internal erosion or piping and to surface erosion from wave action and runoff on the upstream and downstream slopes, respectively. *Note: In general, excavated glacial till is well suited for berm embankment material*.

6. Place anti-seepage filter-drain diaphragms on outflow pipes in berm embankments impounding water with depths greater than 8 feet at the design water surface. See Dam Safety Guidelines, Part IV, Section 3.3.B on pages 3-27 to 3-30. An electronic version of the Dam Safety Guidelines is available in PDF format at https://fortress.wa.gov/ecy/publications/summarypages/9255d.html.

Overflow

1. Provide a primary overflow (usually a riser pipe within the control structure; see Section 3.2.4) in all ponds, tanks, and vaults to bypass the 100-year developed peak flow over or around the restrictor system. This assumes the facility will be full due to plugged orifices or high inflows; the primary overflow is intended to protect against breaching of a pond embankment (or overflows of the upstream conveyance system in the case of a detention tank or vault). The design must provide controlled discharge directly into the downstream conveyance system or another acceptable discharge point.

2. Provide a secondary inlet to the control structure in ponds as additional protection against overtopping should the inlet pipe to the control structure become plugged. A grated opening ("jailhouse window") in the control structure manhole functions as a weir (see Figure 3.2.2) when used as a secondary inlet.
   Note: The maximum circumferential length of this opening must not exceed one-half the control structure circumference. The "birdcage" overflow structure as shown in Figure 3.2.3 may also be used as a secondary inlet.

Emergency Overflow Spillway

1. In addition to the above overflow provisions, ponds must have an emergency overflow spillway. For impoundments of 10 acre-feet or greater, the emergency overflow spillway must meet the state's dam safety requirements (see above). For impoundments under 10 acre-feet, ponds must have an emergency overflow spillway that is sized to pass the 100-year developed peak flow in the event of total control structure failure (e.g., blockage of the control structure outlet pipe) or extreme inflows. Emergency overflow spillways are intended to control the

location of pond overtopping and direct overflows back into the downstream conveyance system or other acceptable discharge point.

2. Provide emergency overflow spillways for ponds with constructed berms over 2 feet in height, or for ponds located on grades in excess of 5 percent. As an option for ponds with berms less than 2 feet in height and located at grades less than 5 percent, emergency overflow may be provided by an emergency overflow structure, such as a Type II manhole fitted with a birdcage as shown in Figure 3.2.3. The emergency overflow structure must be designed to pass the 100-year developed peak flow, with a minimum 6 inches of freeboard, directly to the downstream conveyance system or another acceptable discharge point. Where an emergency overflow spillway would discharge to a slope steeper than 15%, consideration should be given to providing an emergency overflow structure in addition to the spillway.

3. Armour the emergency overflow spillway with riprap in conformance with BMP C209: Outlet Protection in Volume II. The spillway must be armored full width, beginning at a point midway across the berm embankment and extending downstream to where emergency overflows re-enter the conveyance system (see Figure 3.2.2).

4. Emergency overflow spillway designs must be analyzed as broad-crested trapezoidal weirs as described in Methods of Analysis at the end of this section. Either one of the weir sections shown in Figure 3.2.2 may be used.

~~4.~~5. Design the emergency overflow spillway to allow a minimum of 1 foot of freeboard.

Access

The following guidelines for access may be used.

3. Provide maintenance access road(s) to the control structure and other drainage structures associated with the pond (e.g., inlet or bypass structures). It is recommended that manhole and catch basin lids be in or at the edge of the access road and at least three feet from a property line.

4. An access ramp is needed for removal of sediment with a trackhoe and truck. Extend the ramp to the pond bottom if the pond bottom is greater than 1,500 square feet (measured without the ramp). If the pond bottom is less than 1,500 square feet (measured without the ramp), the ramp may end at an elevation 4 feet above the pond bottom.

   On large, deep ponds, provide truck access to the pond bottom via an access ramp so loading can be done in the pond bottom. On small deep ponds, the truck can remain on the ramp for loading. On small shallow ponds, a ramp to the bottom may not be required if the trackhoe can load a truck parked at the pond edge or on the internal berm of a wetpond or combined pond (trackhoes can negotiate interior pond side slopes).

5. The internal berm of a wetpond, or combined detention and wetpond, may be used for access if all of the following apply:
    - The internal berm is no more than 4 feet above the first wetpool cell.
    - The first wetpool cell is less than 1,500 square feet (measured without the ramp).
    - The internal berm is designed to support a loaded truck, considering the berm is normally submerged and saturated.
6. Access ramps must meet the requirements for design and construction of access roads specified below.
7. If a fence is required, access should be limited by a double-posted gate or by bollards – two fixed bollards on each side of the access road and two removable bollards equally located between the fixed bollards.

Design of Access Roads

The design guidelines for access roads:

1. A maximum grade of 15%.
2. A minimum of 40 feet outside turning radius.
3. Locate fence gates only on straight sections of road.
4. 15 feet in width on curves and 12 feet on straight sections.
5. Provide a paved apron where access roads connect to paved public roadways.

Construction of Access Roads

Construct access roads with permeable pavement, gravel surface, or modular grid pavement. All surfaces must conform to the jurisdictional standards and manufacturer's specifications.

Fencing

1. A fence is needed at the emergency overflow water surface elevation, or higher, where a pond interior side slope is steeper than 3H:1V, or where the impoundment is a wall greater than 24 inches in height. The fence need only be constructed for those slopes steeper than 3H:1V. Other regulations such as the International Building Code or Uniform Building Code may require fencing of vertical walls. If more than 10 percent of slopes are steeper 3H:1V, it is recommended that the entire pond be fenced.

    Detention ponds on school sites will need to comply with safety standards developed by the Department of Health (DOH) and the Superintendent for Public Instruction (SPI). These standards include what is called a ‘non-climbable fence.’ One example of a non-climbable fence is a chain-link fence with a tighter mesh, so children cannot get a

foot-hold for climbing. For school sites, and possibly for parks and playgrounds, the designer should consult the DOH's Office of Environmental Programs.

Fences discourage access to portions of a pond where steep side slopes (steeper than 3:1) increase the potential for slipping into the pond. Fences also serve to guide those who have fallen into a pond to side slopes that are flat enough (flatter than 3:1 and unfenced) to allow for easy escape.

2. It is recommended that fences be 6 feet in height. For example designs, see WSDOT Standard Plan L-2, Type 1 or Type 3 chain link fence. The fence may be a minimum of 4 feet in height if the depth of the impoundment (measured from the lowest elevation in the bottom of the impoundment, directly adjacent to the bottom of the fenced slope, up to the emergency overflow water surface) is 5 feet or less. For example designs, see WSDOT Standard Plan L-2, Type 4 or Type 6 chain link fence.
3. Access road gates may be 16 feet in width consisting of two swinging sections 8 feet in width. Provide additional vehicular access gates as needed to facilitate maintenance access.
4. Pedestrian access gates (if needed) should be 4 feet in width.
5. Vertical metal balusters or 9 gauge galvanized steel fabric with bonded vinyl coating can be used as fence material. For steel fabric fences, consider the following aesthetic features:
   a) Vinyl coating that is compatible with the surrounding environment (e.g., green in open, grassy areas and black or brown in wooded areas). All posts, cross bars, and gates may be painted or coated the same color as the vinyl clad fence fabric.
   b) Fence posts and rails that conform to WSDOT Standard Plan L-2 for Types 1, 3, or 4 chain link fence.
6. For metal baluster fences, Uniform Building Code standards apply.
7. Wood fences may be used in subdivisions where the fence will be maintained by homeowners associations or adjacent lot owners.
8. Wood fences should have pressure treated posts (ground contact rated) either set in 24-inch deep concrete footings or attached to footings by galvanized brackets. Rails and fence boards may be cedar, pressure-treated fir, or hemlock.
9. Where only short stretches of the pond perimeter (< 10 percent) have side slopes steeper than 3:1, use split rail fences (3-foot minimum height) or densely planted thorned hedges (e.g., barberry, holly, etc.) in place of a standard fence.

Signage

Detention ponds, infiltration ponds, wetponds, and combined ponds should have a sign placed for maximum visibility from adjacent streets, sidewalks, and paths. An example of sign specifications for a permanent surface water control pond is illustrated in Figure 3.2.4.

Right-of-Way

Right-of-way may be needed for detention pond maintenance. It is recommended that any tract not abutting public right-of-way have 15-20 foot wide extension of the tract to an acceptable access location.

Setbacks

It is recommended that facilities be a minimum of 20 feet from any structure, property line, and any vegetative buffer required by the local government. The detention pond water surface at the pond outlet invert elevation must be set back 100 feet from proposed or existing septic system drainfields. However, the setback requirements are generally specified by the local government, uniform building code, or other statewide regulation and may be different from those mentioned above.

All facilities must be a minimum of 50 feet from the top of any steep (greater than 15%) slope. A geotechnical analysis and report must be prepared addressing the potential impact of the facility on a slope steeper than 15%.

Seeps and Springs

Intermittent seeps along cut slopes are typically fed by a shallow ground water source (interflow) flowing along a relatively impermeable soil stratum. These flows are storm driven and should discontinue after a few weeks of dry weather. However, more continuous seeps and springs, which extend through longer dry periods, are likely from a deeper ground water source. When continuous flows are intercepted and directed through flow control facilities, adjustments to the facility design may have to be made to account for the additional base flow.

Planting Requirements

Sod or seed exposed earth on the pond bottom and interior side slopes with an appropriate seed mixture. Plant all remaining areas of the tract with grass or landscape and mulch with a 3-inch cover of hog fuel or shredded wood mulch. Shredded wood mulch is made from shredded tree trimmings, usually from trees cleared on site. The mulch should be free of garbage and weeds and should not contain excessive resin, tannin, or other material detrimental to plant growth. Do not use construction materials wood debris or wood treated with preservatives for producing shredded wood mulch.

Landscaping

Landscaping is encouraged for most stormwater tract areas (see below for areas not to be landscaped). However, if provided, landscaping should

adhere to the criteria that follow so as not to hinder maintenance operations. Landscaped stormwater tracts may, in some instances, provide a recreational space. In other instances, "naturalistic" stormwater facilities may be placed in open space tracts.

Follow these guidelines if landscaping is proposed for facilities:

1. Do not plant trees or shrubs on berms meeting the criteria of dams regulated for safety.
2. Do not plant trees or shrubs within 10 feet of inlet or outlet pipes or manmade drainage structures such as spillways or flow spreaders. Avoid using species with roots that seek water, such as willow or poplar, within 50 feet of pipes or manmade structures.
3. Restrict planting on berms that impound water permanently or temporarily during storms. This restriction does not apply to cut slopes that form pond banks, only to berms.

   a) Do not plant trees or shrubs on portions of water- impounding berms taller than four feet high. Plant only grasses on berms taller than four feet.

      Grasses allow unobstructed visibility of berm slopes for detecting potential dam safety problems such as animal burrows, slumping, or fractures in the berm.

   b) Trees planted on portions of water-impounding berms less than 4 feet high must be small, not higher than 20 feet mature height, and have a fibrous root system. Table 3.2.1 gives some examples of trees with these characteristics developed for the central Puget Sound.

      These trees reduce the likelihood of blow-down trees, or the possibility of channeling or piping of water through the root system, which may contribute to dam failure on berms that retain water.

   Note: The internal berm in a wetpond is not subject to this planting restriction since the failure of an internal berm would be unlikely to create a safety problem.

4. Plant all landscape material, including grass, in good topsoil. Make native underlying soils suitable for planting by amending with 4 inches of ~~well-aged~~ "composted material" (as defined in Chapter 173-350 WAC) tilled into the subgrade. Refer to BMP T5.13 in Volume V for soil quality standards. ~~Compost used should meet specifications for Grade A compost quality as described in Ecology publication 94-38.~~
5. Soil in which trees or shrubs are planted may need additional enrichment or additional compost top-dressing. Consult a nursery, landscape professional, or arborist for site-specific recommendations.
6. For a naturalistic effect as well as ease of maintenance, plant trees or in clumps to form "landscape islands" rather than spacing evenly.

7. The landscaped islands should be a minimum of six feet apart, and if set back from fences or other barriers, the setback distance should also be a minimum of 6 feet. Where tree foliage extends low to the ground, the six feet setback should be counted from the outer drip line of the trees (estimated at maturity).

   This setback allows a 6-foot wide mower to pass around and between clumps.

8. Evergreen or columnar deciduous trees along the west and south sides of ponds are recommended to reduce thermal heating. Evergreen trees or shrubs are preferred to avoid problems associated with leaf drop. Columnar deciduous trees (e.g., hornbeam, Lombardy poplar, etc.) typically have fewer leaves than other deciduous trees.

   In addition to shade, trees and shrubs also discourage waterfowl use and the attendant phosphorus enrichment problems they cause. Setback trees so the branches will not extend over the pond.

9. Drought tolerant species are recommended.

Table 3.2.1
Small Trees and Shrubs with Fibrous Roots

Small Trees / High Shrubs	Low Shrubs
*Red twig dogwood *(Cornus stolonifera)*	*Snowberry *(Symporicarpus albus)*
*Serviceberry *(Amelanchier alnifolia)*	*Salmonberry *(Rubus spectabilis)*
*Filbert (*Corylus cornuta*, others)	Rosa rugosa (avoid spreading varieties)
Highbush cranberry *(Vaccinium opulus)*	Rock rose *(Cistus spp.)*
Blueberry *(Vaccinium spp.)*	Ceanothus spp. choose hardier varieties)
Fruit trees on dwarf rootstock	New Zealand flax (Phormium penax)
Rhododendron (native and ornamental varieties)	Ornamental grasses (e.g., Miscanthis, Pennisetum)
*Native species	

Guidelines for Naturalistic Planting. Stormwater facilities may sometimes be located within open space tracts if "natural appearing." Two generic kinds of naturalistic planting are outlined below, but other options are also possible. Native vegetation is preferred in naturalistic plantings.

Open Woodland. In addition to the general landscaping guidelines above, the following are recommended.

1. Landscaped islands (when mature) should cover a minimum of 30 percent or more of the tract, exclusive of the pond area.
2. Underplant tree clumps with shade-tolerant shrubs and groundcover plants. The goal is to provide a dense understory that need not be weeded or mowed.
3. Place landscaped islands at several elevations rather than "ring" the pond, and vary the size of clumps from small to large to create variety.
4. Not all islands need to have trees. Shrub or groundcover clumps are acceptable, but lack of shade should be considered in selecting vegetation.

Note: Landscaped islands are best combined with the use of wood-based mulch (hog fuel) or chipped on-site vegetation for erosion control (only for slopes above the flow control water surface). *It is often difficult to sustain a low-maintenance understory if the site was previously hydroseeded. Compost or composted mulch (typically used for constructed wetland soil) can be used below the flow control water surface (materials that are resistant to and preclude flotation). The method of construction of soil landscape systems can also cause natural selection of specific plant species. Consult a soil restoration or wetland soil scientist for site-specific recommendations.*

Northwest Savannah or Meadow. In addition to the general landscape guidelines above, the following are recommended.

1. Landscape islands (when mature) should cover 10 percent or more of the site, exclusive of the pond area.
2. Planting groundcovers and understory shrubs is encouraged to eliminate the need for mowing under the trees when they are young.
3. Place landscape islands at several elevations rather than "ring" the pond.

Plant the remaining site area with an appropriate grass seed mix, which may include meadow or wildflower species. Native or dwarf grass mixes are preferred. Table 3.2.2 below gives an example of dwarf grass mix developed for central Puget Sound. Apply grass seed at 2.5 to 3 pounds per 1,000 square feet.

Note: Amended soil or good topsoil is required for all plantings.

Creation of areas of emergent vegetation in shallow areas of the pond is recommended. Native wetland plants, such as sedges (Carex sp.), bulrush (*Scirpus sp.*), water plantain (*Alisma sp.*), and burreed (*Sparganium sp.*) are recommended. If the pond does not hold standing water, a clump of wet-tolerant, non-invasive shrubs, such as salmonberry or snowberry, is recommended below the detention design water surface.

Note: This landscape style is best combined with the use of grass or sod for site stabilization and erosion control.

Seed Mixes. The seed mixes listed below were developed for central Puget Sound.

Table 3.2.2
Stormwater Tract "Low Grow" Seed Mix

Seed Name	Percentage of Mix
Dwarf tall fescue	40%
Dwarf perennial rye "Barclay"*	30%
Red fescue	25%
Colonial bentgrass	5%

* If wildflowers are used and sowing is done before Labor Day, the amount of dwarf perennial rye can be reduced proportionately to the amount of wildflower seed used.

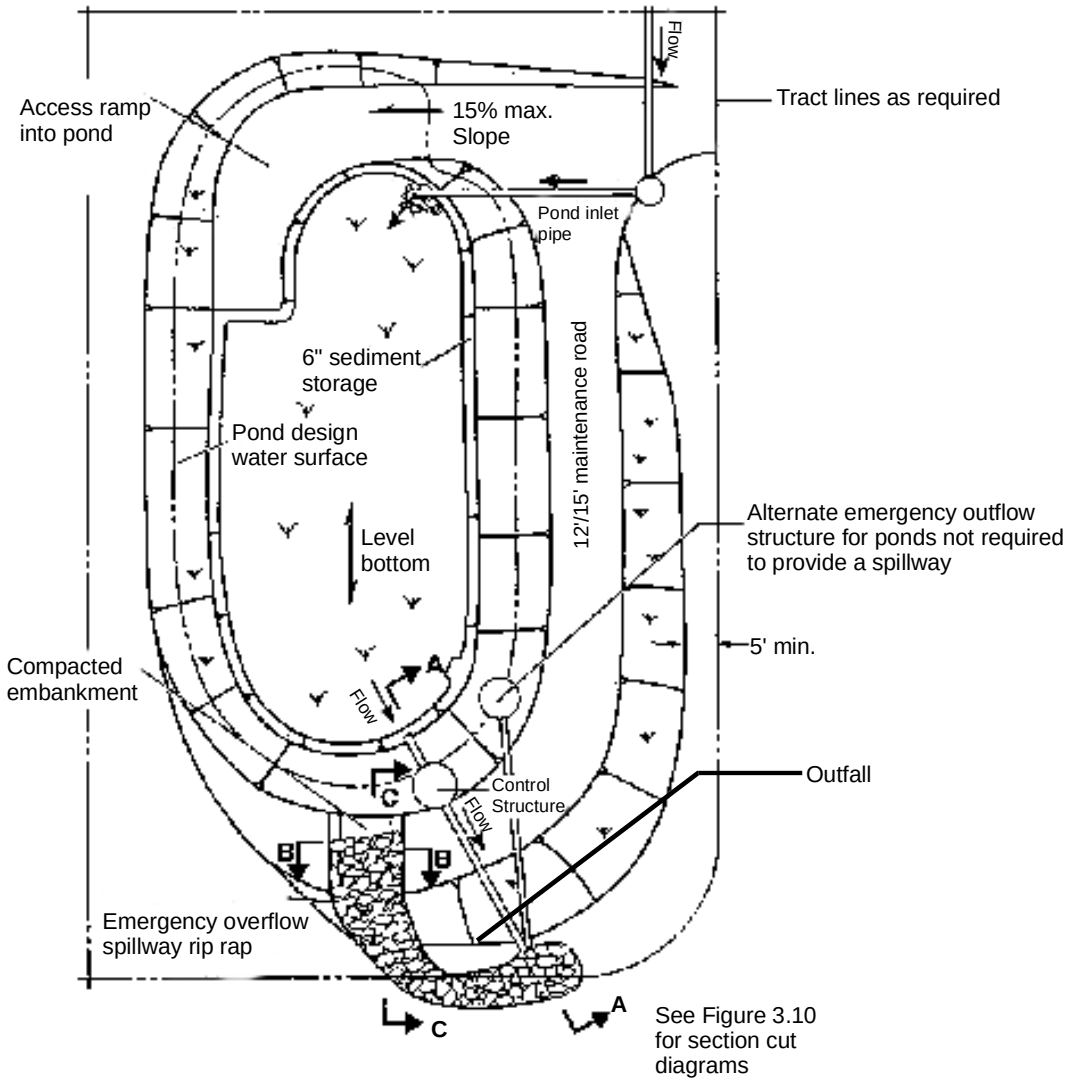

Note:
This detail is a schematic representation only. Actual configuration will vary depending on specific site constraints and applicable design criteria.

Figure 3.2.1 - Typical Detention Pond

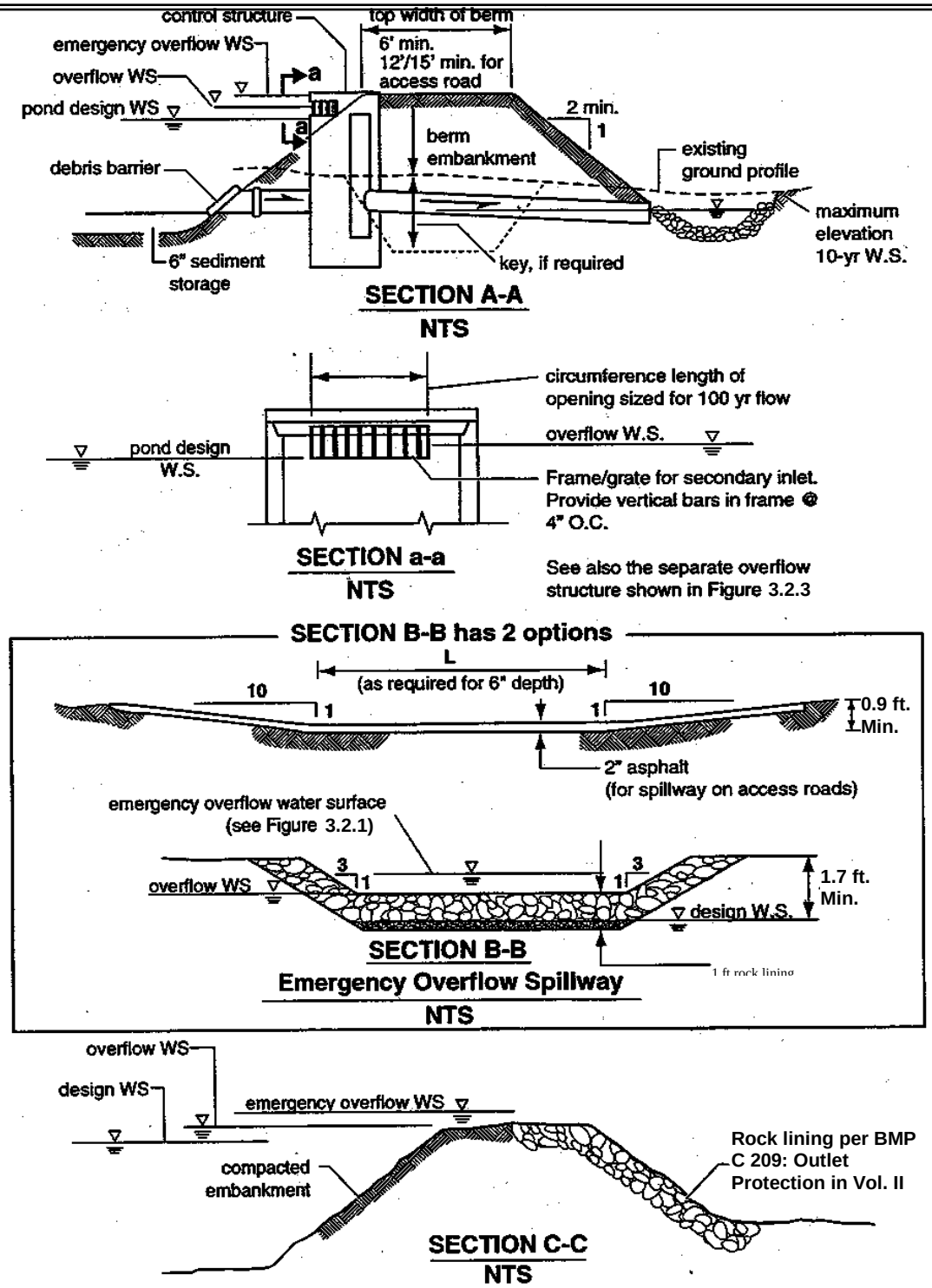

Figure 3.2.2 - Typical Detention Pond Sections

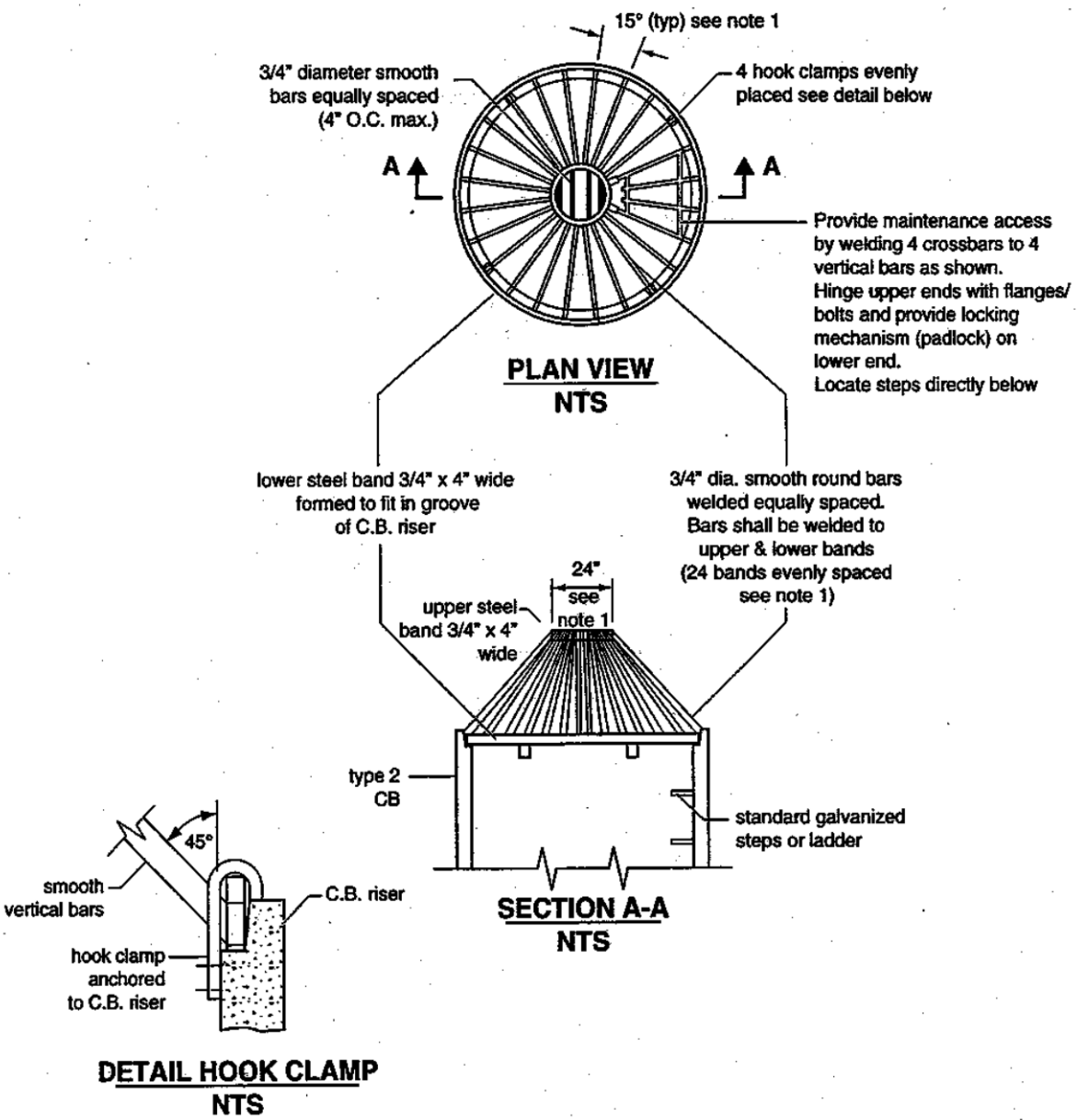

NOTES:

1. Dimensions are for illustration on 54" diameter CB For different diameter CB's adjust to maintain 45° angle on "vertical" bars and 7" o.c. maximum spacing of bars around lower steel band.
2. Metal parts must be corrosion resistant; steel bars must be galvanized.
3. This debris barrier is also recommended for use on the inlet to roadway cross-culverts with high potential for debris collection (except on type 2 streams)

Figure 3.2.3 - Overflow Structure

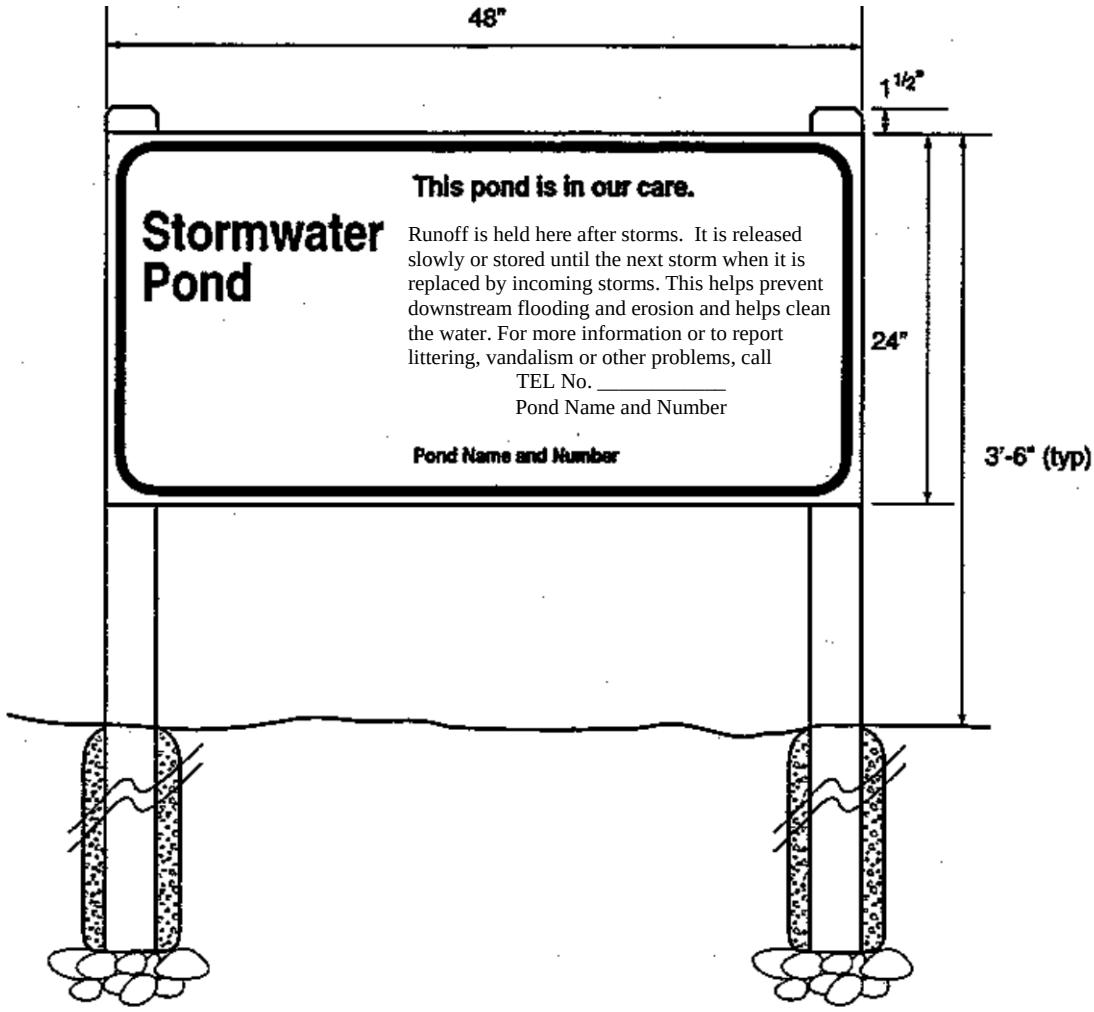

Figure 3.2.4 - Example of Permanent Surface Water Control Pond Sign

Sample Specifications:

Size:	48 inches by 24 inches
Material:	0.125-gauge aluminum
Face:	Non-reflective vinyl or 3 coats outdoor enamel (sprayed).
Lettering:	Silk screen enamel where possible, or vinyl letters.
Colors:	Beige background, teal letters.
Type face:	Helvetica condensed. Title: 3 inch; Sub-Title: 1½ inch; Text: 1 inch; Outer
border:	1/8 inch border distance from edge: 1/4 inch; all text 1¾ inch from border.
Posts:	Pressure treated, beveled tops, 1½ inch higher than sign.
Installation:	Secure to chain link fence if available. Otherwise install on two 4"x4" posts, pressure treated, mounted atop gravel bed, installed in 30-inch concrete filled post holes (8-inch minimum diameter). Top of sign no higher than 42 inches from ground surface.

Placement: Face sign in direction of primary visual or physical access. Do not block any access road. Do not place within 6 feet of structural facilities (e.g. manholes, spillways, pipe inlets).

Special Notes: This facility is lined to protect ground water (if a liner that restricts infiltration of stormwater exists).

Maintenance

General. Maintenance is of primary importance if detention ponds are to continue to function as originally designed. A local government, a designated group such as a homeowners' association, or some individual must accept the responsibility for maintaining the structures and the impoundment area. Formulate a specific maintenance plan outlining the schedule and scope of maintenance operations. Achieve debris removal in detention basins by using trash racks or other screening devices.

Design with maintenance in mind. Good maintenance will be crucial to successful use of the impoundment. Hence, build in provisions to facilitate maintenance operations into the project when it is installed. Maintenance must be a basic consideration in design and in determination of first cost. See Table 3.2.3 for specific maintenance requirements.

Handle any standing water and sediments removed during the maintenance operation in a manner consistent with Appendix IV-G in Volume IV.

Vegetation. If a shallow marsh is established, then periodic removal of dead vegetation may be necessary. Since decomposing vegetation can release pollutants captured in the wet pond, especially nutrients, it may be necessary to harvest dead vegetation annually prior to the winter wet season. Otherwise the decaying vegetation can export pollutants out of the pond and also can cause nuisance conditions to occur. If harvesting is to be done in the wetland, have a wetland scientist prepare a written harvesting procedure and submitted it with the drainage design to the local government.

Sediment. Maintenance of sediment forebays and attention to sediment accumulation within the pond is extremely important. Continually monitor sediment deposition in the basin. Owners, operators, and maintenance authorities should be aware that significant concentrations of metals (e.g., lead, zinc, and cadmium) as well as some organics such as pesticides, may be expected to accumulate at the bottom of these treatment facilities. Regularly conduct testing sediment, especially near points of inflow, to determine the leaching potential and level of accumulation of potentially hazardous material before disposal.

Table 3.2.3 Specific Maintenance Requirements for Detention Ponds			
Maintenance Component	**Defect**	**Conditions When Maintenance Is Needed**	**Results Expected When Maintenance Is Performed**
General	Trash & Debris	Any trash and debris which exceed 5 cubic feet per 1,000 square feet (this is about equal to the amount of trash it would take to fill up one standard size garbage can). In general, there should be no visual evidence of dumping. If less than threshold all trash and debris will be removed as part of next scheduled maintenance.	Trash and debris cleared from site.
	Poisonous Vegetation and noxious weeds	Any poisonous or nuisance vegetation which may constitute a hazard to maintenance personnel or the public. Any evidence of noxious weeds as defined by State or local regulations. (Apply requirements of adopted Integrated Pest Management (IPM) policies for the use of herbicides).	No danger of poisonous vegetation where maintenance personnel or the public might normally be. (Coordinate with local health department). Complete eradication of noxious weeds may not be possible. Compliance with State or local eradication policies required.
	Contaminants and Pollution	Any evidence of oil, gasoline, contaminants or other pollutants. (Coordinate removal/cleanup with local water quality response agency).	No contaminants or pollutants present.
	Rodent Holes	Any evidence of rodent holes if facility is acting as a dam or berm, or any evidence of water piping through dam or berm via rodent holes.	Rodents destroyed and dam or berm repaired. (Coordinate with local health department and Ecology Dam Safety Office if pone exceeds 10 acre feet).

Table 3.2.3 Specific Maintenance Requirements for Detention Ponds			
Maintenance Component	**Defect**	**Conditions When Maintenance Is Needed**	**Results Expected When Maintenance Is Performed**
	Beaver Dams	Dam results in change or function of the facility.	Facility is returned to design function. (Coordinate trapping of beavers and removal of dams with appropriate permitting agencies).
	Insects	When insects such as wasps and hornets interfere with maintenance activities.	Insects destroyed or removed from site. Apply insecticides in compliance with adopted IPM policies.
	Tree Growth and Hazard Trees	Tree growth does not allow maintenance access or interferes with maintenance activity (i.e., slope mowing, silt removal, vactoring, or equipment movements). If trees are not interfering with access or maintenance, do not remove. If dead, diseased, or dying trees are identified. (Use a certified Arborist to determine health of tree or removal requirements).	Trees do not hinder maintenance activities. Harvested trees should be recycled into mulch or other beneficial uses (e.g., alders for firewood). Remove hazard trees.
Side Slopes of Pond	Erosion	Eroded damage over 2 inches deep where cause of damage is still present or where there is potential for continued erosion. Any erosion observed on a compacted berm embankment.	Slopes should be stabilized using appropriate erosion control measure(s); e.g., rock reinforcement, planting of grass, compaction. If erosion is occurring on compacted berms a licensed civil engineer should be consulted to resolve source of erosion.
Storage Area	Sediment	Accumulated sediment that exceeds 10% of the designed pond depth unless otherwise specified or affects inletting or outletting condition of the facility.	Sediment cleaned out to designed pond shape and depth; pond reseeded if necessary to control erosion.
	Liner (If Applicable)	Liner is visible and has more than three 1/4-inch holes in it.	Liner repaired or replaced. Liner is fully covered.

Table 3.2.3 Specific Maintenance Requirements for Detention Ponds			
Maintenance Component	**Defect**	**Conditions When Maintenance Is Needed**	**Results Expected When Maintenance Is Performed**
Pond Berms (Dikes)	Settlements	Any part of berm which has settled 4 inches lower than the design elevation. If settlement is apparent measure berm to determine amount of settlement. Settling can be an indication of more severe problems with the berm or outlet works. A licensed civil engineer should be consulted to determine the source of the settlement.	Dike is built back to the design elevation.
	Piping	Discernable water flow through pond berm. Ongoing erosion with potential for erosion to continue. (Have a Goethechnical engineer inspect and evaluate discernable water flow conditions and recommend repairs).	Piping eliminated. Erosion potential resolved.
Emergency Overflow/ Spillway and Berms over 4 feet in height.	Tree Growth	Tree growth on emergency spillways create blockage problems and may cause failure of the berm due to uncontrolled overtopping. Tree growth on berms over 4 feet in height may lead to piping through the berm which could lead to failure of the berm.	Trees should be removed. If root system is small (base less than 4 inches) the root system may be left in place. Otherwise the roots should be removed and the berm restored. A licensed civil engineer should be consulted for proper berm/spillway restoration.
	Piping	Discernable water flow through pond berm. Ongoing erosion with potential for erosion to continue. (Have a Goethechnical engineer inspect and evaluate discernable water flow conditions and recommend repairs).	Piping eliminated. Erosion potential resolved.
Emergency Overflow/S pillway	Emergency Overflow/ Spillway	Only one layer of rock exists above native soil in area five square feet or larger, or any exposure of native soil at the top of out flow path of spillway. (Rip-rap on inside slopes need not be replaced.)	Rocks and pad depth are restored to design standards.
	Erosion	See “Side slopes of Pond”	

Methods of Analysis

Detention Volume and Outflow. Design volumes and outflows for detention ponds in accordance with Minimum Requirements #7 in Volume I and the hydrologic analysis and design methods in Chapter 2 of this Volume. Design guidelines for restrictor orifice structures are given in Section 3.2.4.

Note: The design water surface elevation is the highest elevation which occurs in order to meet the required outflow performance for the pond.

Detention Ponds in Infiltrative Soils. Detention ponds may occasionally be sited on till soils that are sufficiently permeable for a properly functioning infiltration system (see Section 3.3). These detention ponds have a surface discharge and may also utilize infiltration as a second pond outflow. Detention ponds sized with infiltration as a second outflow must meet all the requirements of Section 3.3 for infiltration ponds, including a soils report, testing, ground water protection, pre-settling, and construction techniques.

Emergency Overflow Spillway Capacity. For impoundments under 10-acre-feet, the emergency overflow spillway weir section must be designed to pass the 100-year runoff event for developed conditions assuming a broad-crested weir. The **broad-crested weir equation** for the spillway section in Figure 3.2.5, for example, would be:

$$Q_{100} = C\,(2g)^{1/2}\left[\frac{2}{3}LH^{3/2} + \frac{8}{15}(\mathrm{Tan}\,\theta)\,H^{5/2}\right] \qquad \text{(equation 1)}$$

Where	Q_{100}	=	peak flow for the 100-year runoff event (cfs)
	C	=	discharge coefficient (0.6)
	g	=	gravity (32.2 ft/sec^2)
	L	=	length of weir (ft)
	H	=	height of water over weir (ft)
	θ	=	angle of side slopes

Q_{100} is either the peak ~~10-minute flow computed~~volumetric flow rate calculated using a 10-minute time step from the 100-year, 24-hour storm and a Type 1A distribution, or the 100-year, 1-hour flow, indicated by an approved continuous runoff model, multiplied by a factor of 1.6.

Assuming C = 0.6 and Tan θ = 3 (for 3:1 slopes), the equation becomes:

$$Q_{100} = 3.21[LH^{3/2} + 2.4\,H^{5/2}] \qquad \text{(equation 2)}$$

To find width L for the weir section, the equation is rearranged to use the computed Q_{100} and trial values of H (0.2 feet minimum):

$$L = [Q_{100}/(3.21H^{3/2})] - 2.4\,H \quad \text{or} \quad 6 \text{ feet minimum} \qquad \text{(equation 3)}$$

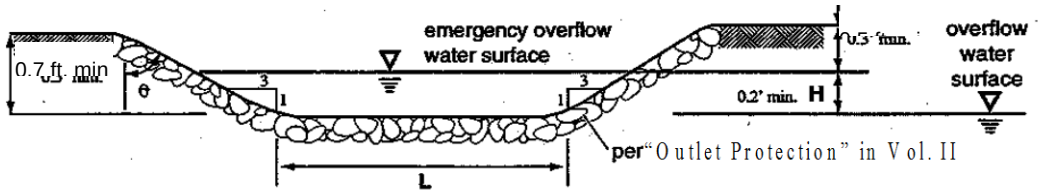

Figure 3.2.5 - Weir Section for Emergency Overflow Spillway

3.2.2 Detention Tanks

Detention tanks are underground storage facilities typically constructed with large diameter corrugated metal pipe. Standard detention tank details are shown in Figure 3.2.6 and Figure 3.2.7. Control structure details are shown in Section 3.2.4.

Design Criteria

General. Typical design guidelines are as follows:

1. Tanks may be designed as flow-through systems with manholes in line (see Figure 3.2.6) to promote sediment removal and facilitate maintenance. Tanks may be designed as back-up systems if preceded by water quality facilities, since little sediment should reach the inlet/control structure and low head losses can be expected because of the proximity of the inlet/control structure to the tank.
2. Locate the detention tank bottom 0.5 feet below the inlet and outlet to provide dead storage for sediment.
3. Use a 36-inch minimum pipe diameter.
4. Tanks larger than 36 inches may be connected to each adjoining structure with a short section (2-foot maximum length) of 36-inch minimum diameter pipe.
5. Refer to the details of outflow control structures in Section 3.2.4.

Note: Control and access manholes should have additional ladder rungs to allow ready access to all tank access pipes when the catch basin sump is filled with water (see Figure 3.2.9, plan view).

Materials. Galvanized metals leach zinc into the environment, especially in standing water situations. This can result in zinc concentrations that can be toxic to aquatic life. Therefore, use of galvanized materials in stormwater facilities and conveyance systems is discouraged. Where other metals, such as aluminum or stainless steel, or plastics are available, they should be used.

Pipe material, joints, and protective treatment for tanks should be in accordance with Section 9.05 of the *WSDOT/APWA Standard Specification*.

Structural Stability. Tanks must meet structural requirements for overburden support and traffic loading if appropriate. Accommodate H-20 live loads for tanks lying under parking areas and access roads. Design metal tank end plates for structural stability at maximum hydrostatic loading conditions. Flat end plates generally require thicker gage material than the pipe and/or require reinforcing ribs. Place tanks on stable, well consolidated native material with a suitable bedding. Do not place tanks in fill slopes, unless analyzed in a geotechnical report for stability and constructability.

Buoyancy. In moderately pervious soils where seasonal ground water may induce flotation, balance buoyancy tendencies by either ballasting with backfill or concrete backfill, providing concrete anchors, increasing the total weight, or providing subsurface drains to permanently lower the ground water table. Calculations that demonstrate stability must be documented.

Access. The following guidelines for access may be used.

1. The maximum depth from finished grade to tank invert should be 20 feet.
2. Position access openings a maximum of 50 feet from any location within the tank.
3. All tank access openings may have round, solid locking lids (usually 1/2 to 5/8-inch diameter Allen-head cap screws).
4. Thirty-six-inch minimum diameter CMP riser-type manholes (Figure 3.2.7) of the same gage as the tank material may be used for access along the length of the tank and at the upstream terminus of the tank in a backup system. The top slab is separated (1-inch minimum gap) from the top of the riser to allow for deflections from vehicle loadings without damaging the riser tank.
5. Make all tank access openings readily accessible by maintenance vehicles.
6. Tanks must comply with the OSHA confined space requirements, which includes clearly marking entrances to confined space areas. This may be accomplished by hanging a removable sign in the access riser(s), just under the access lid.

Access Roads. Access roads are needed to all detention tank control structures and risers. Design and construct access roads as specified for detention ponds in Section 3.2.1.

Right-of-Way. Right-of-way may be needed for detention tank maintenance. It is recommended that any tract not abutting public

right-of-way have a 15 to 20-foot wide extension of the tract to accommodate an access road to the facility.

Setbacks. It is recommended that facilities be a minimum of 20 feet from any structure, property line, and any vegetative buffer required by the local government and from any septic drainfield. However, the setback requirements are generally specified by the local government, uniform building code, or other statewide regulation and may be different from those mentioned above.

All facilities must be a minimum of 50 feet from the top of any steep (greater than 15%) slope. A geotechnical analysis and report must be prepared addressing the potential impact of the facility on a slope steeper than 15%.

Maintenance. Build in provisions to facilitate maintenance operations into the project when it is installed. Maintenance must be a basic consideration in design and in determination of first cost. See Table 3.2.4 for specific maintenance requirements.

Table 3.2.4 Specific Maintenance Requirements for Detention Vaults/Tanks			
Maintenance Component	**Defect**	**Conditions When Maintenance is Needed**	**Results Expected When Maintenance is Performed**
Storage Area	Plugged Air Vents	One-half of the cross section of a vent is blocked at any point or the vent is damaged.	Vents open and functioning.
	Debris and Sediment	Accumulated sediment depth exceeds 10% of the diameter of the storage area for 1/2 length of storage vault or any point depth exceeds 15% of diameter. (Example: 72-inch storage tank would require cleaning when sediment reaches depth of 7 inches for more than 1/2 length of tank.)	All sediment and debris removed from storage area.
	Joints Between Tank/Pipe Section	Any openings or voids allowing material to be transported into facility. (Will require engineering analysis to determine structural stability).	All joint between tank/pipe sections are sealed.
	Tank Pipe Bent Out of Shape	Any part of tank/pipe is bent out of shape more than 10% of its design shape. (Review required by engineer to determine structural stability).	Tank/pipe repaired or replaced to design.
	Vault Structure Includes Cracks in Wall, Bottom, Damage to Frame and/or Top Slab	Cracks wider than 1/2-inch and any evidence of soil particles entering the structure through the cracks, or maintenance/inspection personnel determines that the vault is not structurally sound.	Vault replaced or repaired to design specifications and is structurally sound.
		Cracks wider than 1/2-inch at the joint of any inlet/outlet pipe or any evidence of soil particles entering the vault through the walls.	No cracks more than 1/4-inch wide at the joint of the inlet/outlet pipe.
Manhole	Cover Not in Place	Cover is missing or only partially in place. Any open manhole requires maintenance.	Manhole is closed.
	Locking Mechanism Not Working	Mechanism cannot be opened by one maintenance person with proper tools. Bolts into frame have less than 1/2 inch of thread (may not apply to self-locking lids).	Mechanism opens with proper tools.
	Cover Difficult to Remove	One maintenance person cannot remove lid after applying normal lifting pressure. Intent is to keep cover from sealing off access to maintenance.	Cover can be removed and reinstalled by one maintenance person.
	Ladder Rungs Unsafe	Ladder is unsafe due to missing rungs, misalignment, not securely attached to structure wall, rust, or cracks.	Ladder meets design standards. Allows maintenance person safe access.

Methods of Analysis **Detention Volume and Outflow**

The volume and outflow design for detention tanks must be in accordance with Minimum Requirement #7 in Volume I and the hydrologic analysis and design methods in Chapter 2. Restrictor and orifice design are given in Section 3.2.4.

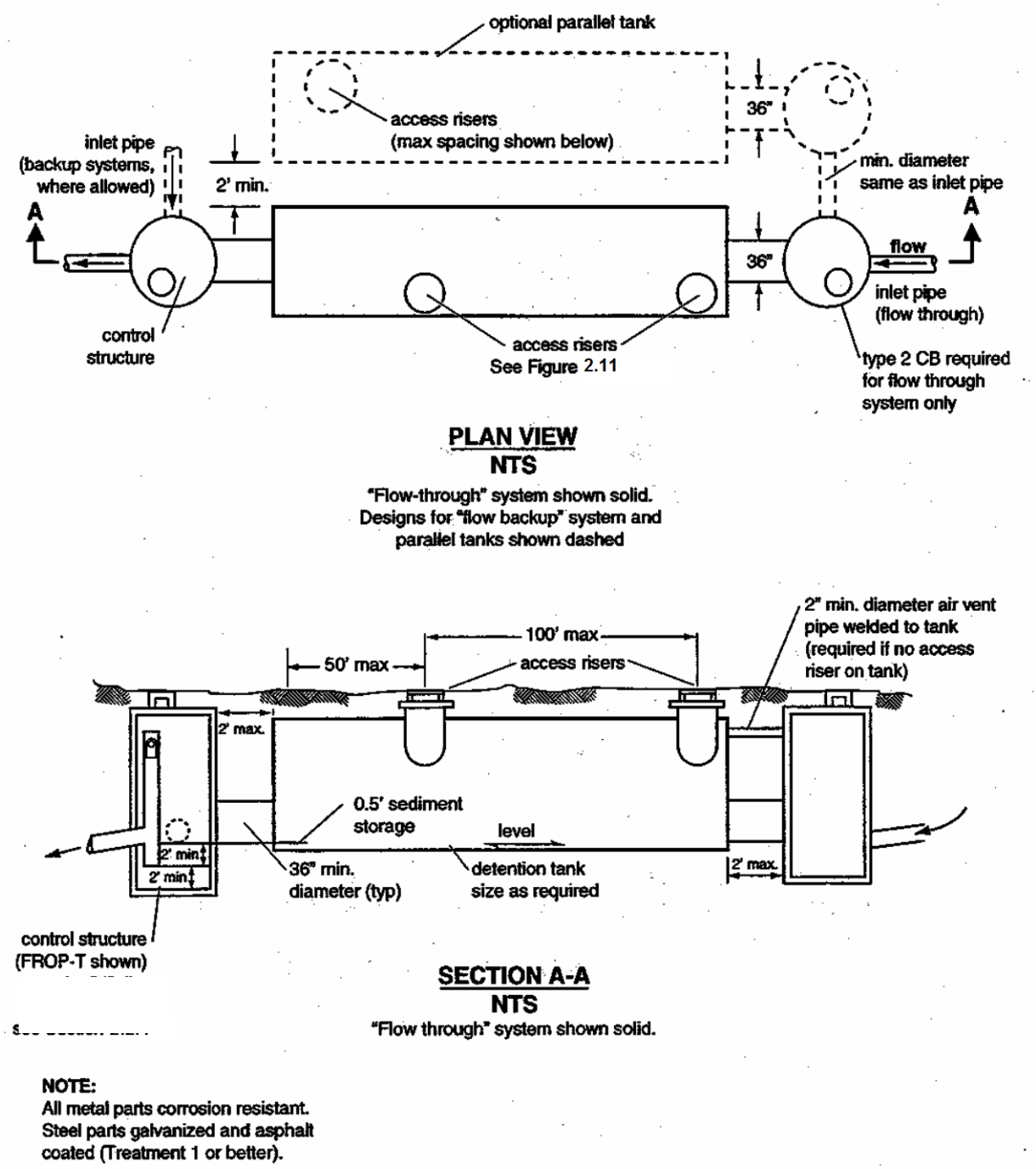

Figure 3.2.6 - Typical Detention Tank

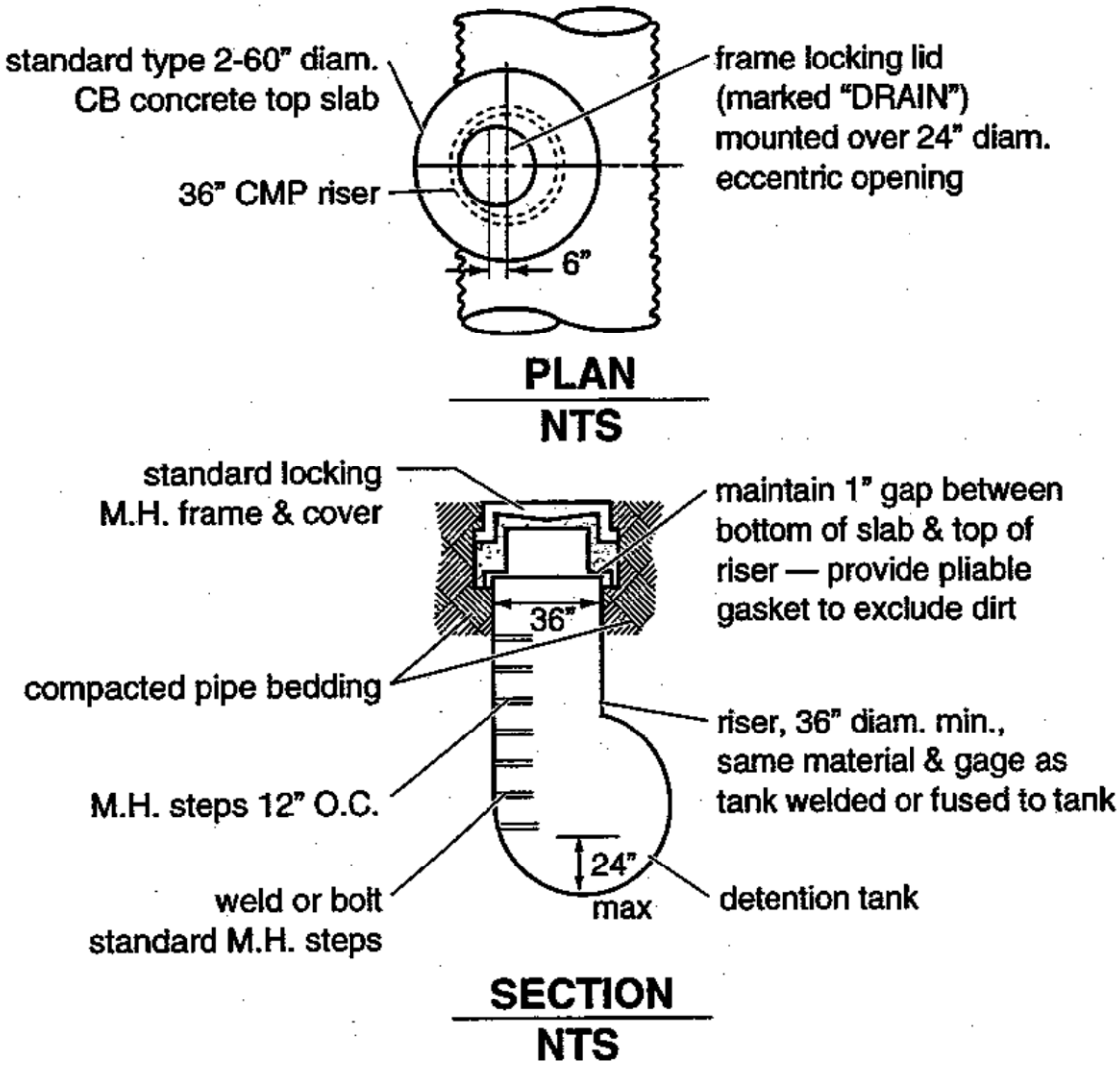

Notes:

1. Use adjusting blocks as required to bring frame to grade.
2. All materials to be aluminum or galvanized and asphalt coated (Treatment 1 or better).
3. Must be located for access by maintenance vehicles.
4. May substitute WSDOT special Type IV manhole (RCP only).

Figure 3.2.7 - Detention Tank Access Detail

3.2.3 Detention Vaults

Detention vaults are box-shaped underground storage facilities typically constructed with reinforced concrete. A standard detention vault detail is shown in Figure 3.2.8. Control structure details are shown in Section 3.2.4.

Design Criteria

General. Typical design guidelines are as follows:

1. Detention vaults may be designed as flow-through systems with bottoms level (longitudinally) or sloped toward the inlet to facilitate sediment removal. Maximize the distance between the inlet and outlet as feasible.
2. The detention vault bottom may slope at least 5 percent from each side towards the center, forming a broad "v" to facilitate sediment removal. More than one "v" may be used to minimize vault depth. However, the vault bottom may be flat with 0.5-1 foot of sediment storage if removable panels are provided over the entire vault. It is recommended that the removable panels be at grade, have stainless steel lifting eyes, and weigh no more than 5 tons per panel.
3. Elevate the invert elevation of the outlet above the bottom of the vault to provide an average 6 inches of sediment storage over the entire bottom. Also, elevate the outlet a minimum of 2 feet above the orifice to retain oil within the vault.
4. Details of outflow control structures are given in Section 3.2.4.

Materials. Minimum 3,000 psi structural reinforced concrete may be used for detention vaults. Provide all construction joints with water stops.

Structural Stability. All vaults must meet structural requirements for overburden support and H-20 traffic loading (See Standard Specifications for Highway Bridges, 1998 Interim Revisions, American Association of State Highway and Transportation Officials). Vaults located under roadways must meet any live load requirements of the local government. Design cast-in-place wall sections as retaining walls. Structural designs for cast-in-place vaults must be stamped by a licensed civil engineer with structural expertise. Place vaults on stable, well-consolidated native material with suitable bedding. Do not place vaults in fill slopes, unless analyzed in a geotechnical report for stability and constructability.

Access. Provide access over the inlet pipe and outlet structure. Use the following guidelines for access.

1. Position access openings a maximum of 50 feet from any location within the tank. Additional access points may be needed on large vaults. Provide access to each "v" if more than one "v" is provided in the vault floor.
2. For vaults with greater than 1,250 square feet of floor area, provide a 5' by 10' removable panel over the inlet pipe (instead of a standard frame, grate and solid cover). Or, provide a separate access vault as shown in Figure 3.2.8.
3. For vaults under roadways, locate the removable panel outside the travel lanes. Or, provide multiple standard locking manhole covers. Ladders and hand-holds need only be provided at the outlet pipe and inlet pipe, and as needed to meet OSHA confined space requirements. Vaults

providing manhole access at 12-foot spacing need not provide corner ventilation pipes as specified in Item 10 below.

4. All access openings, except those covered by removable panels, may have round, solid locking lids, or 3-foot square, locking diamond plate covers.
5. Vaults with widths 10 feet or less must have removable lids.
6. The maximum depth from finished grade to the vault invert should be 20 feet.
7. Provise internal structural walls of large vaults with openings sufficient for maintenance access between cells. Size and situate the openings to allow access to the maintenance "v" in the vault floor.
8. The minimum internal height should be 7 feet from the highest point of the vault floor (not sump), and the minimum width should be 4 feet. However, concrete vaults may be a minimum 3 feet in height and width if used as tanks with access manholes at each end, and if the width is no larger than the height. Also, the minimum internal height requirement may not be needed for any areas covered by removable panels.
9. Vaults must comply with the OSHA confined space requirements, which includes clearly marking entrances to confined space areas. This may be accomplished by hanging a removable sign in the access riser(s), just under the access lid.
10. Provide ventilation pipes (minimum 12-inch diameter or equivalent) in all four corners of vaults to allow for artificial ventilation prior to entry of maintenance personnel into the vault. Or, provide removable panels over the entire vault.

Access Roads. Access roads are needed to the access panel (if applicable), the control structure, and at least one access point per cell, and they may be designed and constructed as specified for detention ponds in Section 3.2.1.

Right-of-Way. Right-of-way is needed for detention vaults maintenance. It is recommended that any tract not abutting public right-of-way should have a 15 to 20-foot wide extension of the tract to accommodate an access road to the facility.

Setbacks. It is recommended that facilities be a minimum of 20 feet from any structure, property line, and any vegetative buffer required by the local government and from any septic drainfield. However, the setback requirements are generally specified by the local government, uniform building code, or other statewide regulation and may be different from those mentioned above.

All facilities must be a minimum of 50 feet from the top of any steep (greater than 15%) slope. A geotechnical analysis and report must be

prepared addressing the potential impact of the facility on a slope steeper than 15%.

Maintenance. Build in provisions to facilitate maintenance operations into the project when it is installed. Maintenance must be a basic consideration in design and in determination of first cost. See Table 3.2.4 for specific maintenance requirements.

Methods of Analysis

Detention Volume and Outflow

Design the volume and outflow for detention vaults in accordance with Minimum Requirement #7 in Volume I and the hydrologic analysis and design methods in Section 2.2.3. Restrictor and orifice design are given in Section 3.2.4.

NOTE: All vault areas must be within 50' of an access point

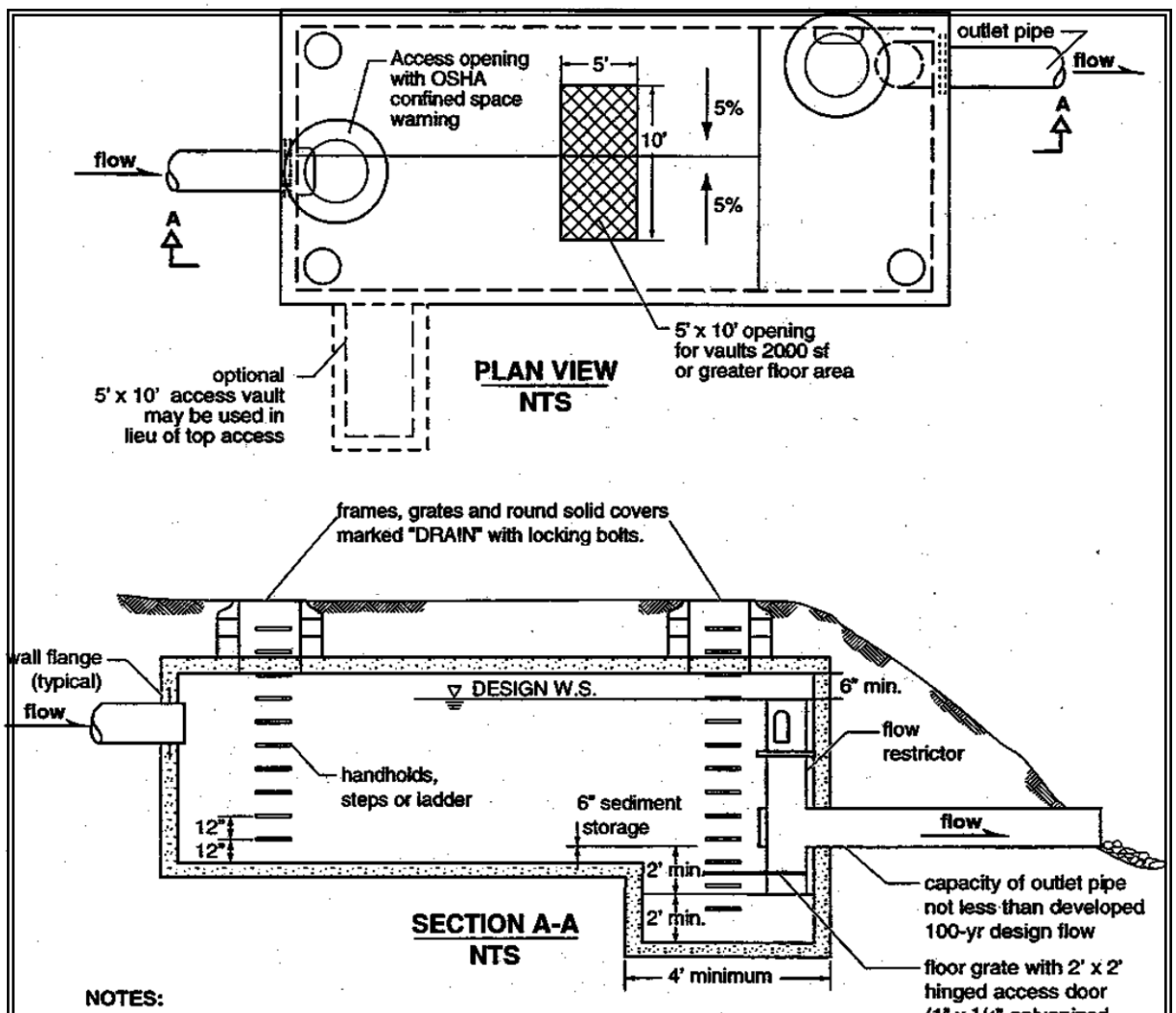

NOTES:

1. All metal parts must be corrosion resistant. Steel parts must be galvanized and asphalt coated (Treatment I or better).
2. Provide water stop at all cast-in-place construction joints. Precast vaults shall have approved rubber gasket system.
3. Vaults ≤ 10' wide must use removable lids.
4. Prefabricated vault sections may require structural modifications to support 5' x 10' opening over main vault. Alternatively, access can be provided via a side vestibule as shown.

Figure 3.2.8 - Typical Detention Vault

3.2.4 Control Structures

Control structures are catch basins or manholes with a restrictor device for controlling outflow from a facility to meet the desired performance. Riser type restrictor devices ("tees" or "FROP-Ts") also provide some incidental oil/water separation to temporarily detain oil or other floatable pollutants in runoff due to accidental spill or illegal dumping.

The restrictor device usually consists of two or more orifices and/or a weir section sized to meet performance requirements.

Standard control structure details are shown in Figure 3.2.9 through Figure 3.2.11.

Design Criteria

Multiple Orifice Restrictor

In most cases, control structures need only two orifices: one at the bottom and one near the top of the riser, although additional orifices may best utilize detention storage volume. Several orifices may be located at the same elevation if necessary to meet performance requirements.

1. Minimum orifice diameter is 0.5 inches. *Note:* In some instances, a 0.5-inch bottom orifice will be too large to meet target release rates, even with minimal head. In these cases, the live storage depth need not be reduced to less than 3 feet in an attempt to meet the performance standards. Also, under such circumstances, flow-throttling devices may be a feasible option. These devices will throttle flows while maintaining a plug-resistant opening.
2. Orifices may be constructed on a tee section as shown in Figure 3.2.9 or on a baffle as shown in Figure 3.2.10.
3. In some cases, performance requirements may require the top orifice/elbow to be located too high on the riser to be physically constructed (e.g., a 13-inch diameter orifice positioned 0.5 feet from the top of the riser). In these cases, a notch weir in the riser pipe may be used to meet performance requirements (see Figure 3.2.13).
4. Consider the backwater effect of water surface elevations in the downstream conveyance system. High tailwater elevations may affect performance of the restrictor system and reduce live storage volumes.

Riser and Weir Restrictor

1. Properly designed weirs may be used as flow restrictors (see Figure 3.2.11 and Figure 3.2.13 through Figure 3.2.15). However, they must be designed to provide for primary overflow of the developed 100-year peak flow discharging to the detention facility.
2. The combined orifice and riser (or weir) overflow may be used to meet performance requirements; however, the design must still provide for primary overflow of the developed 100-year peak flow assuming all orifices are plugged. Figure 3.2.16 can be used to calculate the head in feet above a riser of given diameter and flow.

Access. The following guidelines for access may be used.

1. Provide an access road to the control structure for inspection and maintenance. Design and construct the access road as specified for detention ponds in Section 3.3.1.
2. Manhole and catch basin lids for control structures must be locking, and rim elevations must match proposed finish grade.
3. Manholes and catch-basins must meet the OSRA confined space requirements, which include clearly marking entrances to confined space areas. This may be accomplished by hanging a removable sign in the access riser, just under the access lid.

Information Plate. It is recommended that a brass or stainless steel plate be permanently attached inside each control structure with the following information engraved on the plate:

Name and file number of project

Name and company of (1) developer, (2) engineer, and (3) contractor

Date constructed

Date of manual used for design

Outflow performance criteria

Release mechanism size, type, and invert elevation

List of stage, discharge, and volume at one-foot increments

Elevation of overflow

Recommended frequency of maintenance.

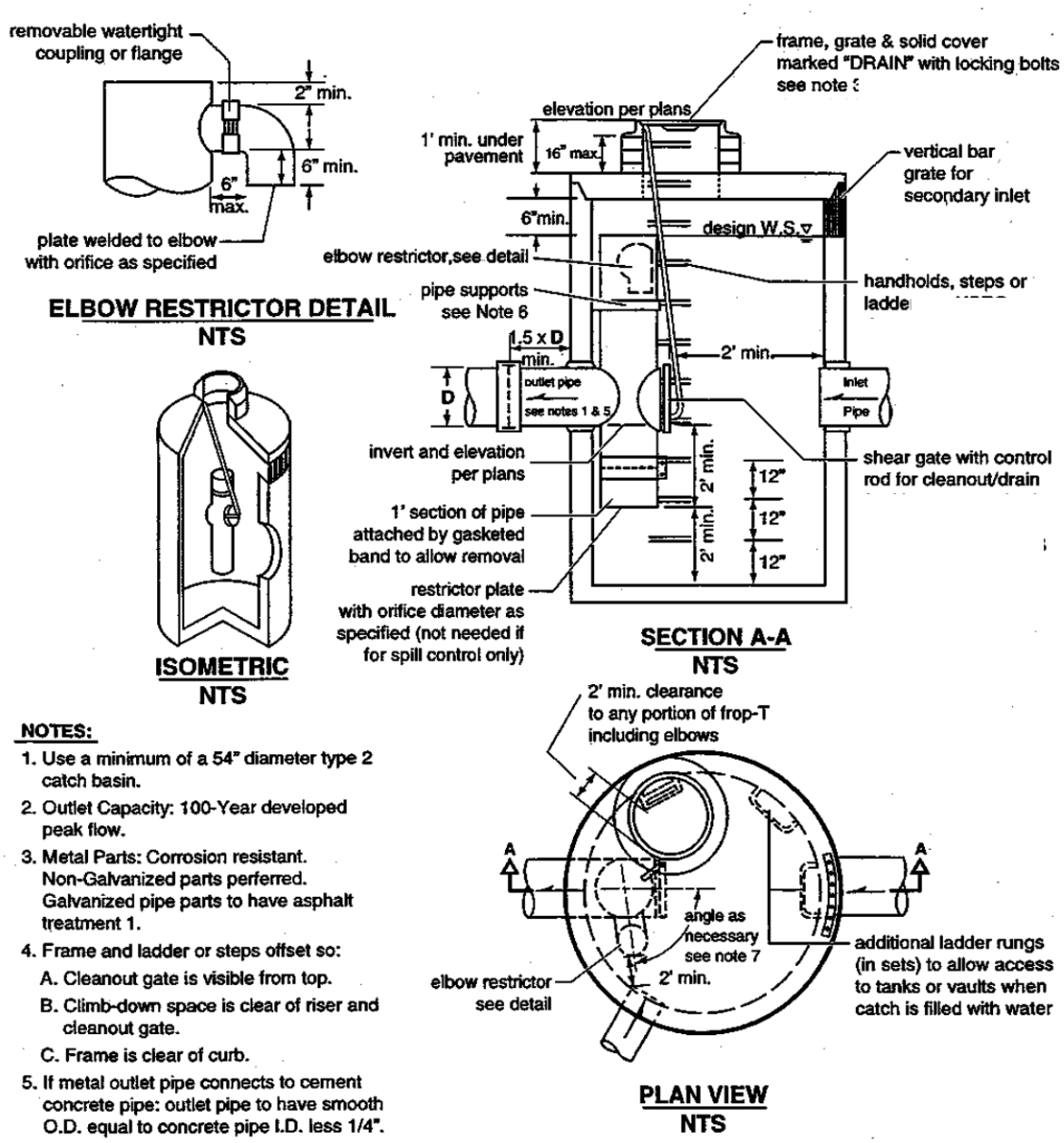

NOTES:

1. Use a minimum of a 54" diameter type 2 catch basin.
2. Outlet Capacity: 100-Year developed peak flow.
3. Metal Parts: Corrosion resistant. Non-Galvanized parts perferred. Galvanized pipe parts to have asphalt treatment 1.
4. Frame and ladder or steps offset so:
   A. Cleanout gate is visible from top.
   B. Climb-down space is clear of riser and cleanout gate.
   C. Frame is clear of curb.
5. If metal outlet pipe connects to cement concrete pipe: outlet pipe to have smooth O.D. equal to concrete pipe I.D. less 1/4".
6. Provide at least one 3" X .090 inches support bracket anchored to concrete wall. (maximum 3'-0" vertical spacing)
7. Locate elbow restrictor(s) as necessary to provide minimum clearance as shown.
8. Locate additional ladder rungs in structures used as access to tanks or vaults to allow access when catch basin is filled with water.

Figure 3.2.9 - Flow Restrictor (TEE)

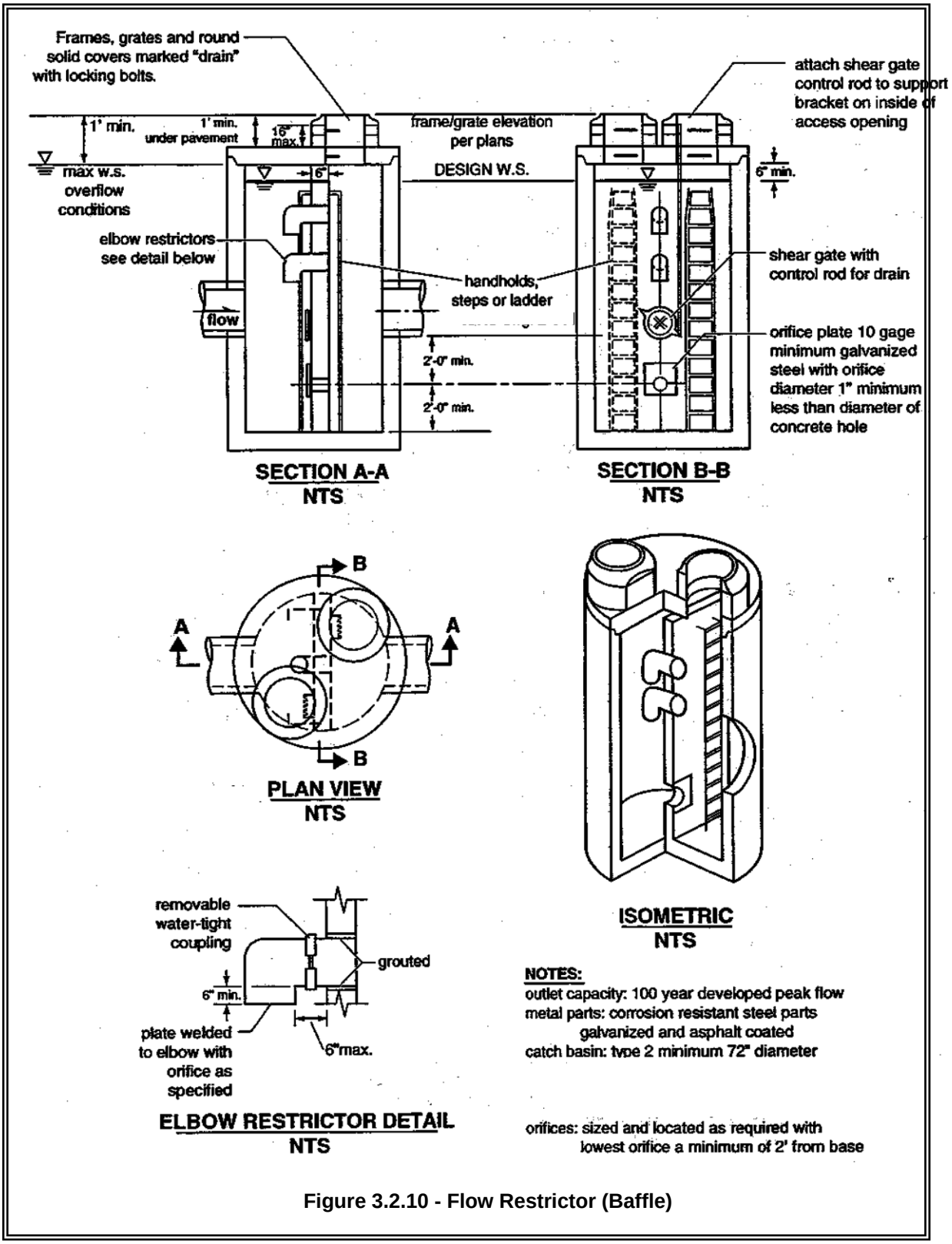

Figure 3.2.10 - Flow Restrictor (Baffle)

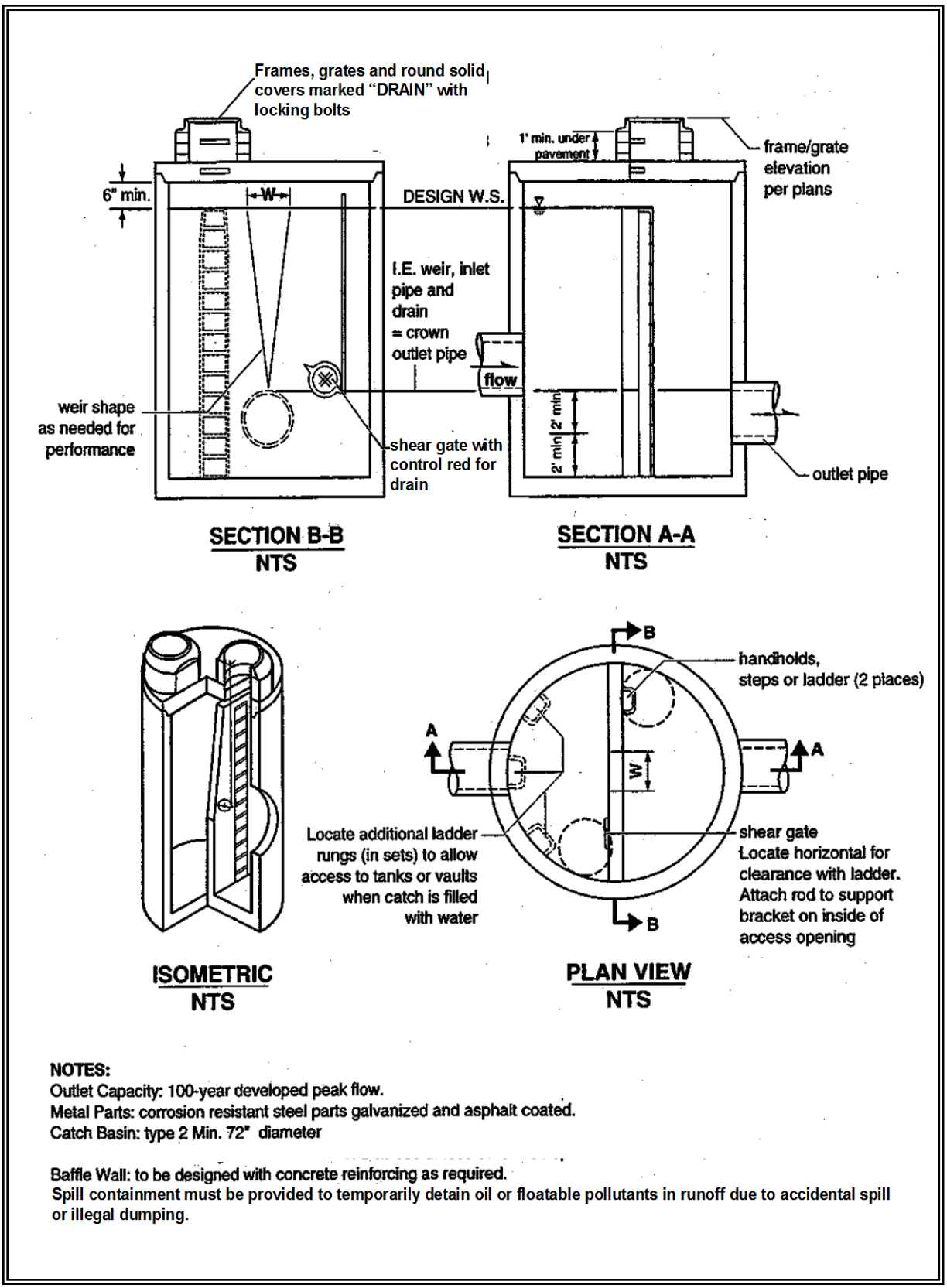

Figure 3.2.11 - Flow Restrictor (Weir)

Maintenance. Control structures and catch basins have a history of maintenance-related problems and it is imperative to establish a good maintenance program for them to function properly. Typical sediment builds up inside the structure, which blocks or restricts flow to the inlet. To prevent this problem routinely clean out these structures at least twice per year. Conduct regular inspections of control structures to detect the need for non-routine cleanout, especially if construction or land-disturbing activities occurr in the contributing drainage area.

Instal a 15-foot wide access road to the control structure for inspection and maintenance.

Table 3.2.5 provides maintenance recommendations for control structures and catch basins.

Table 3.2.5
Maintenance of Control Structures and Catchbasins

Maintenance Component	Defect	Condition When Maintenance is Needed	Results Expected When Maintenance is Performed
General	Trash and Debris (Includes Sediment)	Material exceeds 25% of sump depth or 1 foot below orifice plate.	Control structure orifice is not blocked. All trash and debris removed.
	Structural Damage	Structure is not securely attached to manhole wall.	Structure securely attached to wall and outlet pipe.
		Structure is not in upright position (allow up to 10% from plumb).	Structure in correct position.
		Connections to outlet pipe are not watertight and show signs of rust.	Connections to outlet pipe are water tight; structure repaired or replaced and works as designed.
		Any holes--other than designed holes--in the structure.	Structure has no holes other than designed holes.
Cleanout Gate	Damaged or Missing	Cleanout gate is not watertight or is missing.	Gate is watertight and works as designed.
		Gate cannot be moved up and down by one maintenance person.	Gate moves up and down easily and is watertight.
		Chain/rod leading to gate is missing or damaged.	Chain is in place and works as designed.
		Gate is rusted over 50% of its surface area.	Gate is repaired or replaced to meet design standards.
Orifice Plate	Damaged or Missing	Control device is not working properly due to missing, out of place, or bent orifice plate.	Plate is in place and works as designed.
	Obstructions	Any trash, debris, sediment, or vegetation blocking the plate.	Plate is free of all obstructions and works as designed.
Overflow Pipe	Obstructions	Any trash or debris blocking (or having the potential of blocking) the overflow pipe.	Pipe is free of all obstructions and works as designed.
Manhole	See Table 3.4	See Table 3..4	See Table 3.4
CATCH BASINS			

Table 3.2.5 Maintenance of Control Structures and Catchbasins			
Maintenance Component	**Defect**	**Condition When Maintenance is Needed**	**Results Expected When Maintenance is Performed**
General	Trash & Debris	Trash or debris which is located immediately in front of the catch basin opening or is blocking inletting capacity of the basin by more than 10%.	No Trash or debris located immediately in front of catch basin or on grate opening.
		Trash or debris (in the basin) that exceeds 60 percent of the sump depth as measured from the bottom of basin to invert of the lowest pipe into or out of the basin, but in no case less than a minimum of six inches clearance from the debris surface to the invert of the lowest pipe.	No trash or debris in the catch basin.
		Trash or debris in any inlet or outlet pipe blocking more than 1/3 of its height.	Inlet and outlet pipes free of trash or debris.
		Dead animals or vegetation that could generate odors that could cause complaints or dangerous gases (e.g., methane).	No dead animals or vegetation present within the catch basin.
	Sediment	Sediment (in the basin) that exceeds 60 percent of the sump depth as measured from the bottom of basin to invert of the lowest pipe into or out of the basin, but in no case less than a minimum of 6 inches clearance from the sediment surface to the invert of the lowest pipe. Measured from the bottom of basin to invert of the lowest pipe into or out of the basin.	No sediment in the catch basin.
	Structure Damage to Frame and/or Top Slab	Top slab has holes larger than 2 square inches or cracks wider than 1/4 inch. (Intent is to make sure no material is running into basin).	Top slab is free of holes and cracks.
		Frame not sitting flush on top slab, i.e., separation of more than 3/4 inch of the frame from the top slab. Frame not securely attached	Frame is sitting flush on the riser rings or top slab and firmly attached.
	Fractures or Cracks in Basin Walls/ Bottom	Maintenance person judges that structure is unsound.	Basin replaced or repaired to design standards.
		Grout fillet has separated or cracked wider than 1/2 inch and longer than 1 foot at the joint of any inlet/outlet pipe or any evidence of soil particles entering catch basin through cracks.	Pipe is regrouted and secure at basin wall.
	Settlement/ Misalignment	If failure of basin has created a safety, function, or design problem.	Basin replaced or repaired to design standards.
	Vegetation	Vegetation growing across and blocking more than 10% of the basin opening.	No vegetation blocking opening to basin.
		Vegetation growing in inlet/outlet pipe joints that is more than six inches tall and less than six inches apart.	No vegetation or root growth present.
	Contamination and Pollution	See "Detention Ponds".	No pollution present.

Table 3.2.5 Maintenance of Control Structures and Catchbasins			
Maintenance Component	**Defect**	**Condition When Maintenance is Needed**	**Results Expected When Maintenance is Performed**
Catch Basin Cover	Cover Not in Place	Cover is missing or only partially in place. Any open catch basin requires maintenance.	Catch basin cover is closed.
	Locking Mechanism Not Working	Mechanism cannot be opened by one maintenance person with proper tools. Bolts into frame have less than 1/2 inch of thread.	Mechanism opens with proper tools.
	Cover Difficult to Remove	One maintenance person cannot remove lid after applying normal lifting pressure. (Intent is keep cover from sealing off access to maintenance).	Cover can be removed by one maintenance person.
Ladder	Ladder Rungs Unsafe	Ladder is unsafe due to missing rungs, not securely attached to basin wall, misalignment, rust, cracks, or sharp edges.	Ladder meets design standards and allows maintenance person safe access.
Metal Grates (If Applicable)	Grate opening Unsafe	Grate with opening wider than 7/8 inch.	Grate opening meets design standards.
	Trash and Debris	Trash and debris that is blocking more than 20% of grate surface inletting capacity.	Grate free of trash and debris.
	Damaged or Missing.	Grate missing or broken member(s) of the grate.	Grate is in place and meets design standards.

Methods of Analysis

This section presents the methods and equations for design of **control structure restrictor devices.** Included are details for the design of orifices, rectangular sharp-crested weirs, v-notch weirs, sutro weirs, and overflow risers.

Orifices. Flow-through orifice plates in the standard tee section or turn-down elbow may be approximated by the general equation:

$$Q = C\,A\sqrt{2gh} \qquad \text{(equation 4)}$$

where Q = flow (cfs)
C = coefficient of discharge (0.62 for plate orifice)
A = area of orifice (ft^2)
h = hydraulic head (ft)
g = gravity (32.2 ft/sec^2)

Figure 3.2.12 illustrates this simplified application of the orifice equation.

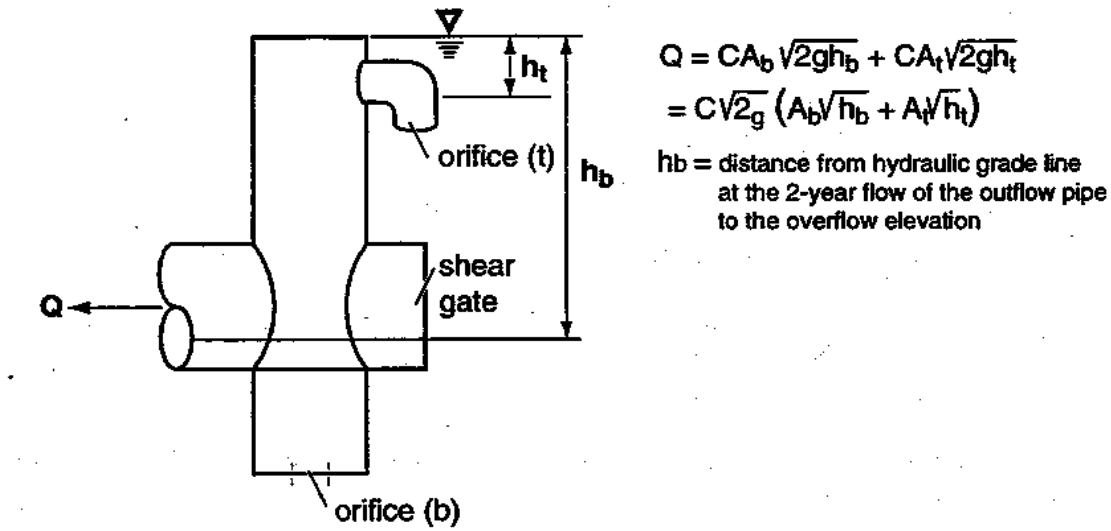

Figure 3.2.12 - Simple Orifice

The diameter of the orifice is calculated from the flow. The orifice equation is often useful when expressed as the orifice diameter in inches:

$$d = \sqrt{\frac{36.88Q}{\sqrt{h}}} \qquad \text{(equation 5)}$$

where d = orifice diameter (inches)
Q = flow (cfs)
h = hydraulic head (ft)

Rectangular Sharp-Crested Weir. The rectangular sharp-crested weir design shown in Figure 3.2.13 may be analyzed using standard weir equations for the fully contracted condition.

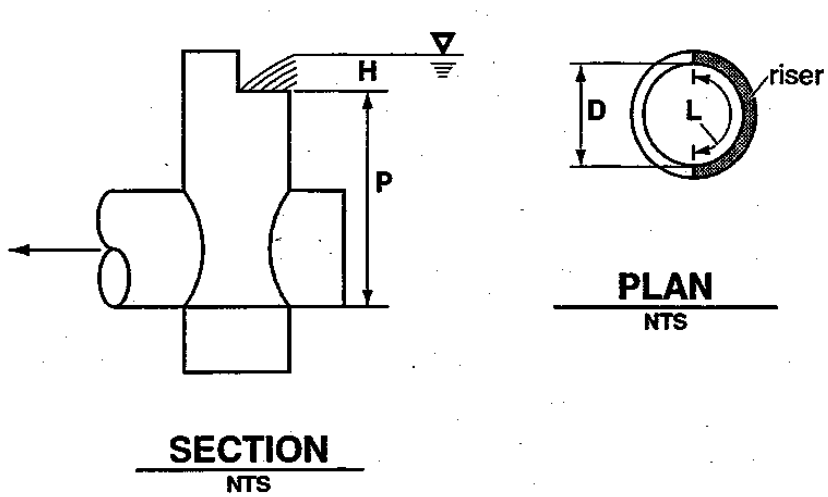

Figure 3.2.13 - Rectangular, Sharp-Crested Weir

$Q=C\,(L - 0.2H)H^{3/2}$ (equation 6)

where Q = flow (cfs)

C = 3.27 + 0.40 H/P (ft)

H, P are as shown above

L = length (ft) of the portion of the riser circumference as necessary not to exceed 50 percent of the circumference

D = inside riser diameter (ft)

Note that this equation accounts for side contractions by subtracting 0.1H from L for each side of the notch weir.

V-Notch Sharp - Crested Weir

V-notch weirs as shown in Figure 3.2.14 may be analyzed using standard equations for the fully contracted condition.

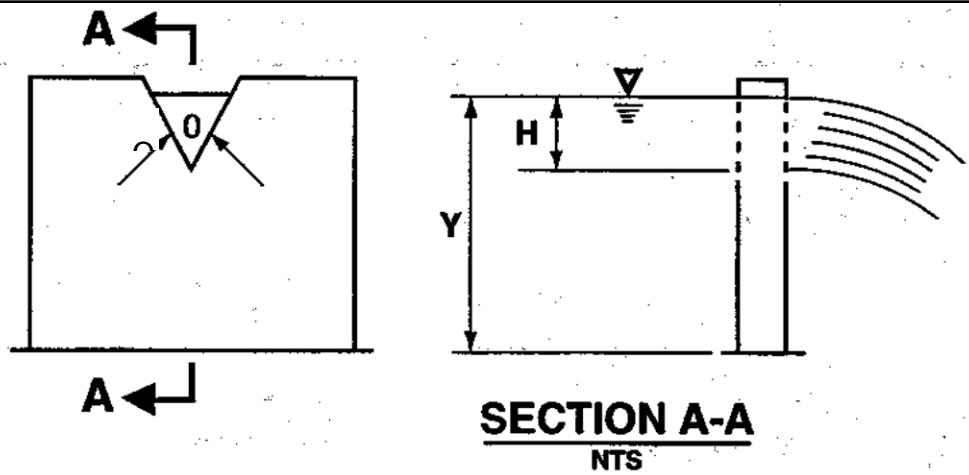

$Q = C_d(\text{Tan } \Theta/2)H^{5/2}$. in cfs

Where values of C_d may be taken from the following chart:

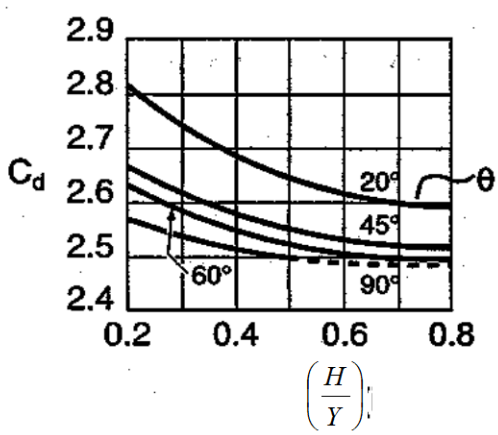

Figure 3.2.14 - V-Notch, Sharp-Crested Weir

Proportional or Sutro Weir. Sutro weirs are designed so that the discharge is proportional to the total head. This design may be useful in some cases to meet performance requirements.

The sutro weir consists of a rectangular section joined to a curved portion that provides proportionality for all heads above the line A-B (see Figure 3.2.15). The weir may be symmetrical or non-symmetrical.

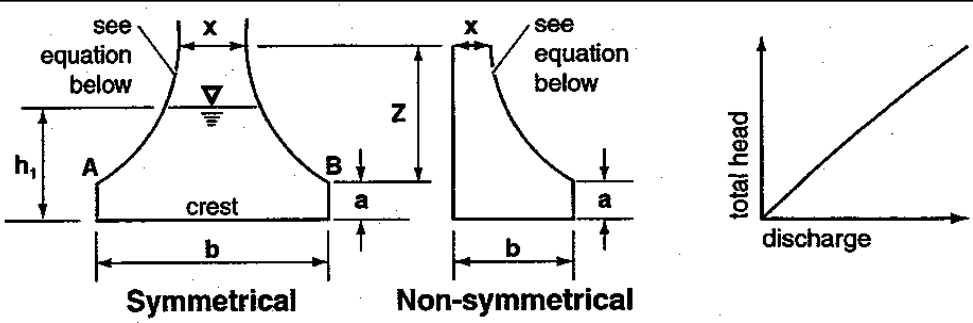

Figure 3.2.15 - Sutro Weir

For this type of weir, the curved portion is defined by the following equation (calculated in radians):

$$\frac{x}{b} = 1 - \frac{2}{\pi} Tan^{-1} \sqrt{\frac{Z}{a}} \qquad \text{(equation 7)}$$

where a, b, x and Z are as shown in Figure 3.2.15. The head-discharge relationship is:

$$Q = (C_d)\,(b)\,(\sqrt{2ga})(h_1 - \frac{a}{3}) \qquad \text{(equation 8)}$$

Values of *Cd* for both symmetrical and non-symmetrical sutro weirs are summarized in Table 3.2.6.

Note: When b > 1.50 or a > 0.30, use Cd=0.6.

Table 3.2.6 Values of C_d for Sutro Weirs					
Cd *Values, Symmetrical*					
b (ft)					
a (ft)	**0.50**	**0.75**	**1.0**	**1.25**	**1.50**
0.02	0.608	0.613	0.617	0.6185	0.619
0.05	0.606	0.611	0.615	0.617	0.6175
0.10	0.603	0.608	0.612	0.6135	0.614
0.15	0.601	0.6055	0.610	0.6115	0.612
0.20	0.599	0.604	0.608	0.6095	0.610
0.25	0.598	0.6025	0.6065	0.608	0.6085
0.30	0.597	0.602	0.606	0.6075	0.608
***Cd* Values, Non-Symmetrical**					
***b* (ft)**					
a (ft)	**0.50**	**0.75**	**1.0**	**1.25**	**1.50**
0.02	0.614	0.619	0.623	0.6245	0.625
0.05	0.612	0.617	0.621	0.623	0.6235
0.10	0.609	0.614	0.618	0.6195	0.620
0.15	0.607	0.6115	0.616	0.6175	0.618
0.20	0.605	0.610	0.614	0.6155	0.616
0.25	0.604	0.6085	0.6125	0.614	0.6145
0.30	0.603	0.608	0.612	0.6135	0.614

Riser Overflow. The nomograph in Figure 3.2.16 can be used to determine the head (in feet) above a riser of given diameter and for a given flow (usually the 100-year peak flow for developed conditions).

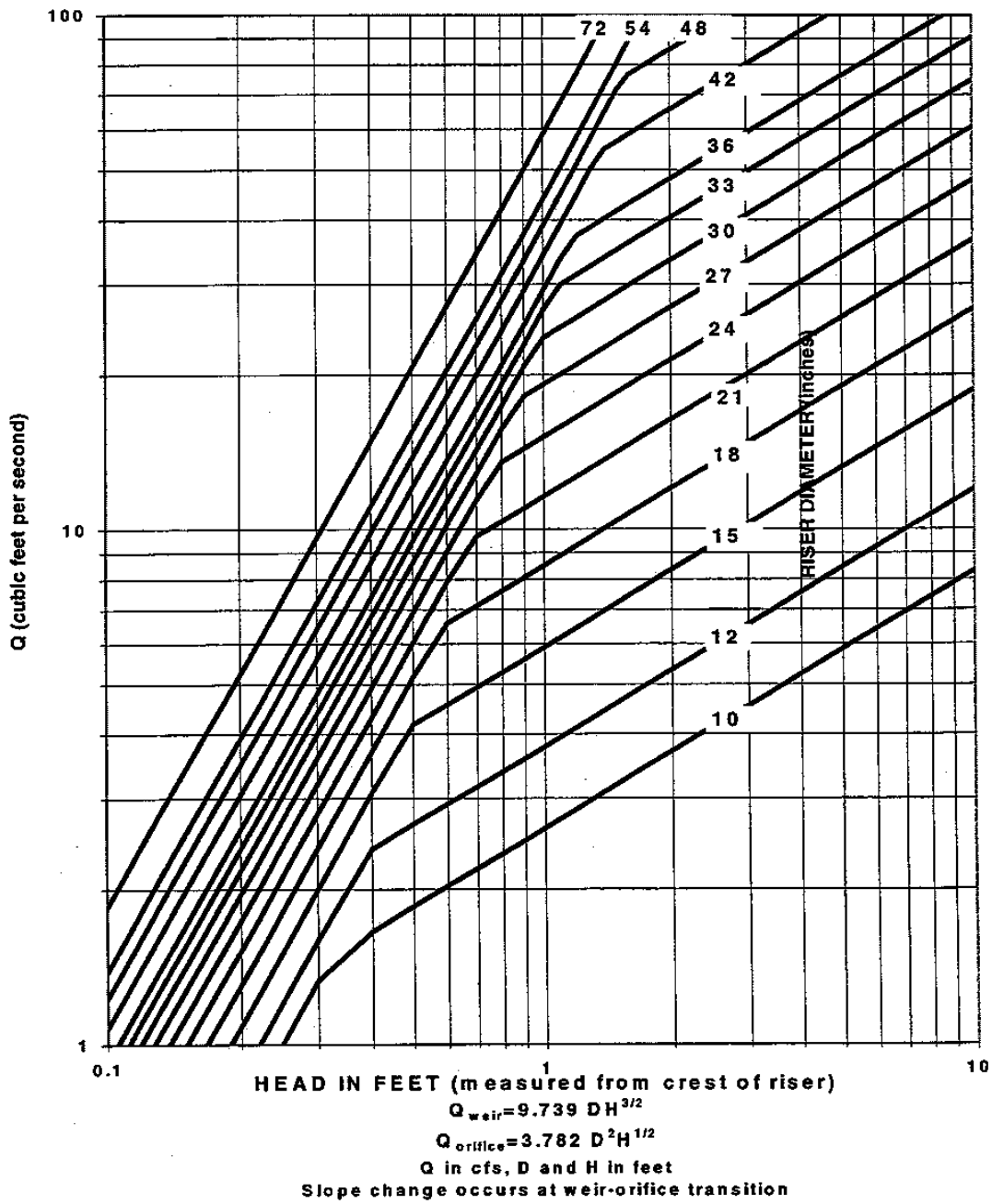

Figure 3.2.16 - Riser Inflow Curves

3.2.5 Other Detention Options

This section presents other design options for detaining flows to meet flow control facility requirements.

Use of Parking Lots for Additional Detention. Private parking lots may be used to provide additional detention volume for runoff events greater than the 2-year runoff event provided all of the following are met:

1. The depth of water detained does not exceed 1 foot at any location in the parking lot for runoff events up to and including the 100-year event.
2. The gradient of the parking lot area subject to ponding is 1 percent or greater.
3. The emergency overflow path is identified and noted on the engineering plan. The overflow must not create a significant adverse impact to downhill properties or drainage system.
4. Fire lanes used for emergency equipment are free of ponding water for all runoff events up to and including the 100-year event.

Use of Roofs for Detention

Detention ponding on roofs of structures may be used to meet flow control requirements provided all of the following are met:

1. The roof support structure is analyzed by a structural engineer to address the weight of ponded water.
2. The roof area subject to ponding is sufficiently waterproofed to achieve a minimum service life of 30 years.
3. The minimum pitch of the roof area subject to ponding is 1/4-inch per foot.
4. An overflow system is included in the design to safely convey the 100-year peak flow from the roof
5. A mechanism is included in the design to allow the ponding area to be drained for maintenance purposes or in the event the restrictor device is plugged.

3.3 Infiltration Facilities for Flow Control and for Treatment

3.3.1 Purpose

The purpose of this section is to describe the steps required to: evaluate the suitability of a site for infiltration facilities; establish a design infiltration rate; and design facilities for infiltration.

This section applies to infiltration ponds/basins, trenches, vaults and tanks. It does not apply to downspout infiltration trenches. This section only applies to the design of Bioretention facilities, permeable pavements, and filter media devices where specific references are made in:

- Section 3.4.
- BMP T7.30 – Bioretention (see Volume V).
- BMP T5.15 – Permeable Pavement (see Volume V).

This section also highlights design criteria that are applicable to infiltration facilities serving a treatment function.

3.3.2 Description

An infiltration facility is typically an open basin (pond), trench, or buried perforated pipe used for distributing the stormwater runoff into the underlying soil (See Figure 3.3.1). Stormwater dry-wells receiving uncontaminated or properly treated stormwater can also be considered as infiltration facilities. (See Underground Injection Control Program, Chapter 173-218 WAC).

Coarser more permeable soils can be used for complying with the LID performance standard (an option in Minimum Requirement #5), and the flow control requirement (Minimum Requirement #7) provided that the infiltrated stormwater does not cause a violation of ground water quality standards. At a minimum, pre-treatment for removal of TSS is necessary prior to discharge to the infiltration facility if any runoff comes from a pollution-generating surface. An oil control facility is also necessary for "high use" sites. Pre-treatment facilities that have the capability for removal of soluble pollutants, particularly, petroleum-related pollutants and bacteria, are advisable if Site Suitability Criterion SSC-6 is not met at the infiltration facility.

Use of the soil for treatment purposes is an option as long as it is preceded by a pre-settling basin or a basic treatment BMP. This pre-treatment should reduce the incidence of plugging and extend operational times between major maintenance.

3.3.3 Applications

Infiltration facilities for complying with the LID performance standard and the flow control requirement are used to convey stormwater runoff from new development or redevelopment to the ground and ground water after appropriate treatment. Infiltration facilities for treatment purposes rely on the soil profile to provide treatment. In either case, manage runoff in excess of the infiltration capacity of the facilities to comply with the flow control requirement in Volume I, if flow control applies to the project.

Infiltration facilities can help accomplish the following:

- Ground water recharge.
- Discharge of uncontaminated or properly treated stormwater to dry-wells in compliance with Ecology's UIC regulations (Chapter 173-218 WAC).
- Retrofits in limited land areas: Infiltration trenches can be considered for residential lots, commercial areas, parking lots, and open space areas.
- Flood control.
- Streambank erosion control.

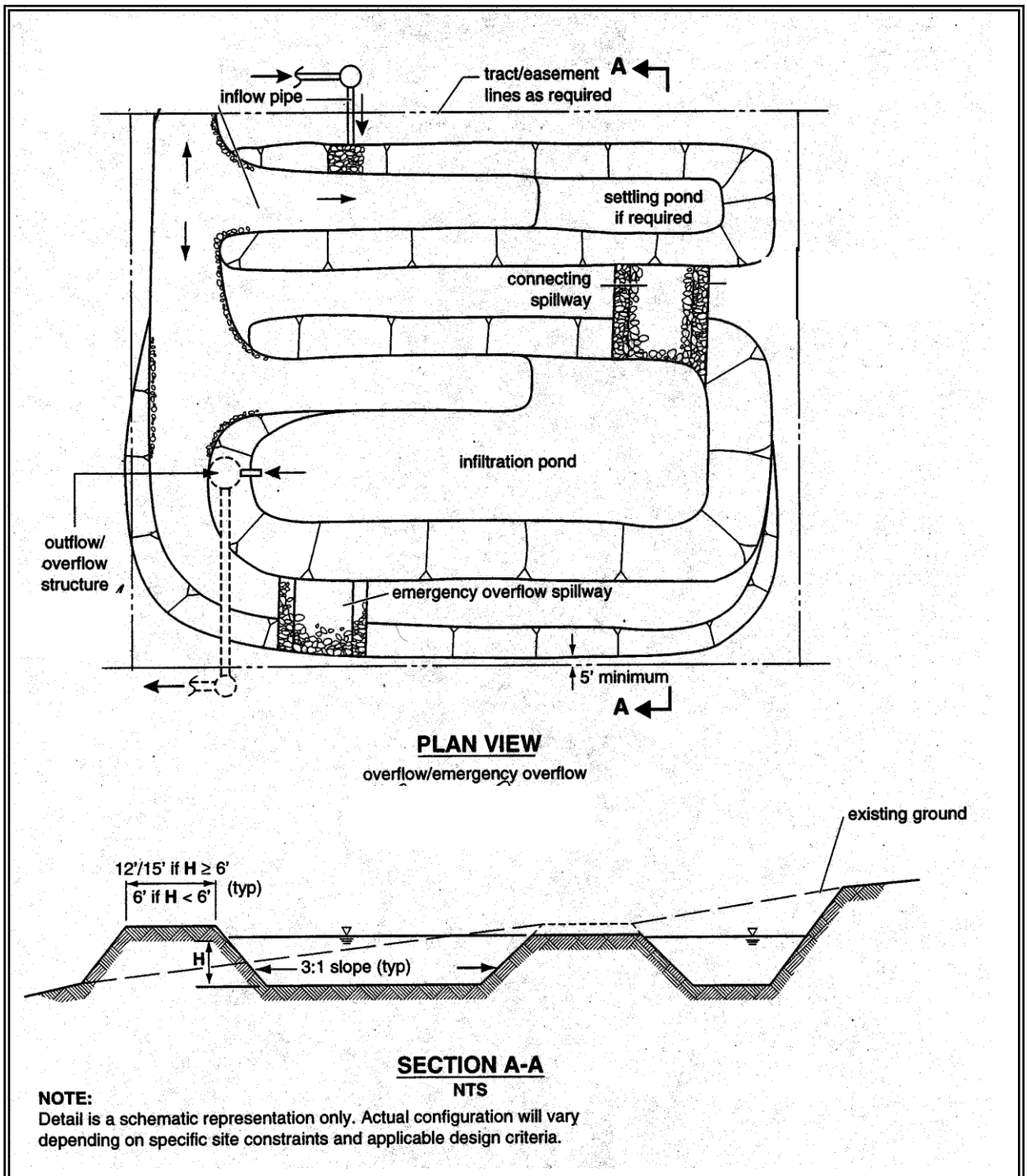

Figure 3.3.1 - Typical Infiltration Pond/Basin

3.3.4 Steps for the Design of Infiltration Facilities - Simplified Approach

The simplified approach for the design of infiltration facilities was derived from high ground water and shallow pond sites in western Washington, and in general will produce conservative designs. This approach can be used when determining the trial geometry of the infiltration facility, for small facilities serving short plats or commercial developments less than 1 acre of contributing area. Designs of infiltration facilities for larger projects should use the detailed approach and may have to incorporate the results of a ground water mounding analysis as described in Section 3.3.8. *Note:* A ground water mounding analysis is advisable for facilities with drainage areas smaller than 1 acre if the depth to a low permeability layer (e.g., less than 0.1 inches per hour) is less than 10 feet.

The simplified approach is applicable to ponds and trenches and includes the process in Figure 3.3.2 and the following steps:

1. Select a location:

This will be based on the ability to convey flow to the location and the expected soil conditions of the location. Conduct a preliminary surface and sub-surface characterization study (Section 3.3.5). Do a preliminary check of Site Suitability Criteria (Section 3.3.7) to initially estimate feasibility of locating an infiltration facility on the site.

2. Estimate volume of stormwater, Vdesign:

Estimate the volume of stormwater by using a continuous hydrograph and an approved continuous runoff model such as WWHM, MGSFlood, or KCRTS for the calculations. The runoff file developed for the project site serves as input to the infiltration basin.

For infiltration basins sized simply to meet treatment requirements, the basin must successfully infiltrate 91% of the influent runoff file. The remaining 9% of the influent file can bypass the infiltration facility.

For infiltration basins sized to meet the flow control standard, the basin must infiltrate either all of the influent file, or a sufficient amount of the influent file such that any overflow/bypass meets the flow duration standard. In addition, the overflow/bypass must meet the LID performance standard if it is the option chosen to meet Minimum Requirement #5, or if it is required of the project.

3. Develop trial infiltration facility geometry:

To develop the trial facility geometry assume an infiltration rate based on previously available data, or a default infiltration rate of 0.5 inches/hour. Use this trial facility geometry to help locate the facility and for planning purposes in developing the geotechnical subsurface investigation plan.

4. Complete More Detailed Site Characterization Study and Consider Site Suitability Criteria:

Information gathered during initial geotechnical and surface investigations is necessary to know whether infiltration is feasible. The geotechnical investigation evaluates the suitability of the site for infiltration, establishes the infiltration rate for design, and evaluates slope stability, foundation capacity, and other geotechnical design information needed to design and assess constructability of the facility.

See sections 3.3.5 and 3.3.7.

5. Determine the design infiltration rate as follows:

Estimate the design (long-term) infiltration rate as follows:

- Use the Large Scale or Small Scale Pilot Infiltration Test (PIT) method (or other local-approved method) as described in Section 3.3.6 to estimate a measured (initial) saturated hydraulic conductivity (K_{sat}). Alternatively, for sites underlain with soils not consolidated by glacial advance (e.g., recessional outwash soils), the measured saturated hydraulic conductivity rate (K_{sat}) may be estimated using the grain size analysis method in Section 3.3.6.
- Assume that the K_{sat} is the measured (initial) infiltration rate for the facility.
- Adjust this rate using the appropriate correction factors, as explained in Section 3.3.6 for the PIT results and the Gradation Analysis results, to obtain the design infiltration rate.

6. Size the facility:

The maximum ponded water depth should be between 2 and 6 feet with at least one foot of freeboard.

If sizing a treatment facility, use the output files from an approved continuous runoff model to document: 1) that the facility can infiltrate 91 percent of the influent runoff file; and 2) that the Water Quality Design Storm Volume- (indicated by WWHM or MGS Flood) can infiltrate through the infiltration basin surface within 48 hours. The latter can be calculated by multiplying a horizontal projection of the infiltration basin mid-depth dimensions by the estimated long-term infiltration rate; and multiplying the result by 48 hours.

If sizing a facility to meet the flow control requirement, use the output files of an approved continuous runoff model to document that the total of any bypass and overflow meets the applicable flow control standard.

If choosing, or required, to comply with the LID performance standard use the output files to document that the facility's total of bypass and overflow meets the LID performance standard. *Note:* Use of distributed LID

facilities dispersed throughout the project site will help achieve the LID performance standard.

7. Construct the facility & Conduct Performance Testing:

Test and monitor the constructed facility to demonstrate that the facility performs as designed. Use the same test method for saturated hydraulic conductivity as used in the planning stages so that results are comparable. Perform the testing after stabilizing the construction site. Submit the results and comparisons to the pre-project measured (initial) and design rates to the local stormwater authority that approved the project design. If the rates are lower than the design saturated hydraulic conductivity, the applicant shall implement measures to improve infiltration capability within the footprint of the constructed facility and re-test. If less intensive measures prove unsuccessful, replacement of the top foot of soil – or more if visual observation indicates deeper fouling of the bed with fine sediment – with a soil meeting the design needs (i.e., treatment, flow control, or both) shall be provided. Longer-term monitoring of drawdown times and periodic testing of the facility should provide an indication of when the facility needs maintenance to restore infiltration rates.

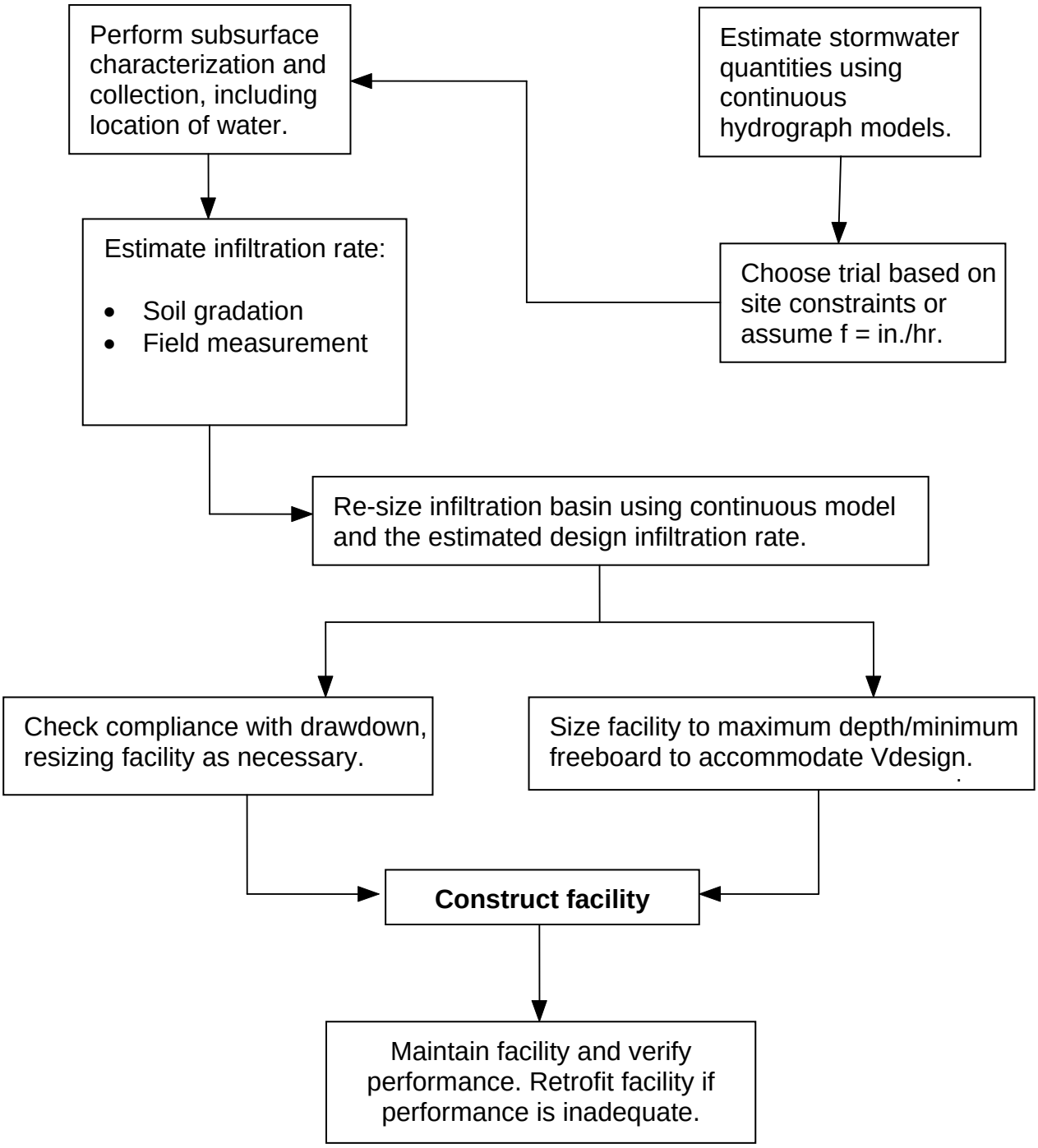

Figure 3.3.2 - Steps for Design of Infiltration Facilities – Simplified Approach

3.3.5 Site Characterization Criteria

One of the first steps in siting and designing infiltration facilities is to conduct a characterization study that includes the following:

Note: Information gathered during initial geotechnical investigations can be used for the site characterization.

Surface Features Characterization:

1. Topography within 500 feet of the proposed facility.
2. Anticipated site use (street/highway, residential, commercial, high-use site).
3. Location of water supply wells within 500 feet of proposed facility.
4. Location of ground water protection areas and/or 1, 5 and 10 year time of travel zones for municipal well protection areas (if available).
5. A description of local site geology, including soil or rock units likely to be encountered, the ground water regime, and geologic history of the site.

Subsurface Characterization:

1. Subsurface explorations (test holes or test pits) to a depth below the base of the infiltration facility of at least 5 times the maximum design depth of ponded water proposed for the infiltration facility, but not less than 10 feet below the base of the facility. However, at sites with shallow ground water (less than 15 feet from the estimated base of facility), if a ground water mounding analysis is necessary, determine the thickness of the saturated zone.

   Continuous sampling (representative samples from each soil type and/or unit within the infiltration receptor) to a depth below the base of the infiltration facility of 2.5 times the maximum design ponded water depth, but not less than 10 feet. For large infiltration facilities serving drainage areas of 10 acres or more, perform soil grain size analyses on layers up to 50 feet deep (or no more than 10 feet below the water table).

2. If proposing to estimate the infiltration rate using the soil grain size analysis method, obtain samples adequate for the purposes of that gradation/classification testing.
   - For basins, at least one test pit or test hole per 5,000 ft^2 of basin infiltrating surface (in no case less than two per basin).
   - For trenches, at least one test pit or test hole per 200 feet of trench length (in no case less than two per trench).

Note: The depth and number of test holes or test pits, and samples should be increased, if in the judgment of a licensed engineer with geotechnical

expertise (P.E.), a licensed geologist, engineering geologist, hydrogeologist, or other licensed professional acceptable to the local jurisdiction, the conditions are highly variable and such increases are necessary to accurately estimate the performance of the infiltration system. The exploration program may also be decreased if, in the opinion of the licensed engineer or other professional, the conditions are relatively uniform and the borings/test pits omitted will not influence the design or successful operation of the facility. In high water table sites, the subsurface exploration sampling need not be conducted lower than two (2) feet below the ground water table.

3. Prepare detailed logs for each test pit or test hole and a map showing the location of the test pits or test holes. Logs must include at a minimum, depth of pit or hole, soil descriptions, depth to water, presence of stratification. *(Note: Logs must substantiate whether stratification does or does not exist. The licensed professional may consider additional methods of analysis to substantiate the presence of stratification that will significantly impact the design of the infiltration facility).*

4. Ground water monitoring wells (or driven well points if expected shallow depth to ground water) installed to locate the ground water table and establish its gradient, direction of flow, and seasonal variations, considering both confined and unconfined aquifers. For facilities serving a drainage area less than an acre, establish that the depth to ground water or other hydraulic restriction layer will be at least 10 feet below the base of the facility. Use subsurface explorations or information from nearby wells.

   In general, a minimum of three wells per infiltration facility, or three hydraulically connected surface or ground water features, are needed to determine the direction of flow and gradient. If in the assessment of the site professional, the surrounding site conditions indicate that gradient and flow direction are not critical (e.g., there is low risk of down-gradient impacts) one monitoring well may be sufficient. Alternative means of establishing the ground water levels may also be considered. If the ground water in the area is known to be greater than 50 feet below the proposed facility, detailed investigation of the ground water regime is not necessary.

   Monitoring through at least one wet season is required, unless substantially equivalent site historical data regarding ground water levels is available.

5. If using the soil Grain Size Analysis Method for estimating infiltration rates: laboratory testing as necessary to establish the soil gradation characteristics and other properties as necessary, to complete the infiltration facility design. At a minimum, conduct one-grain size analysis per soil stratum in each test hole within 2.5 times the

maximum design water depth, but not less than 10 feet. When assessing the hydraulic conductivity characteristics of the site, soil layers at greater depths must be considered if the licensed professional conducting the investigation determines that deeper layers will influence the rate of infiltration for the facility, requiring soil gradation/classification testing for layers deeper than indicated above.

Soil Testing:

Soil characterization for each soil unit (soils of the same texture, color, density, compaction, consolidation and permeability) encountered should include:

- Grain-size distribution (ASTM D422 or equivalent AASHTO specification) (*If using the grain size analysis method to estimate infiltration rates)*
- Visual grain size classification
- Percent clay content (include type of clay, if known)
- Color/mottling
- Variations and nature of stratification

If the infiltration facility will provide treatment as well as flow control, the soil characterization should also include:

- Cation exchange capacity (CEC) and organic matter content for each soil type and strata where distinct changes in soil properties occur, to a depth below the base of the facility of at least 2.5 times the maximum design water depth, but not less than 6 feet.
- For soils with low CEC and organic content, deeper characterization of soils may be warranted (refer to Section 3.3.7 Site Suitability Criteria)

Infiltration Receptor:

Infiltration receptor (unsaturated and saturated soil receiving the stormwater) characterization should include:

1. The information obtained from ground water monitoring in #4 of the Subsurface Characterization above.
2. An assessment of the ambient ground water quality, if that is a concern.
3. An estimate of the volumetric water holding capacity of the infiltration receptor soil. This is the soil layer below the infiltration facility and above the seasonal high-water mark, bedrock, hardpan, or other low permeability layer. Conduct this analysis at a conservatively high infiltration rate based on vadose zone porosity, and the water quality runoff volume to be infiltrated. This, along with an analysis of ground water movement, will be useful in determining if there are volumetric

limitations that would adversely affect drawdown, and if a ground water mounding analysis should be conducted.

4. Determination of:
   - Depth to ground water table and to bedrock/impermeable layers.
   - Seasonal variation of ground water table based on well water levels and observed mottling.
   - Existing ground water flow direction and gradient.
   - Lateral extent of infiltration receptor.
   - Horizontal hydraulic conductivity of the saturated zone to assess the aquifer's ability to laterally transport the infiltrated water.
   - Impact of the infiltration rate and volume at the project site on ground water mounding, flow direction, and water table; and the discharge point or area of the infiltrating water. Conduct a ground water mounding analysis at all sites where the depth to seasonal ground water table or low permeability stratum is less than 15 feet from the estimated bottom elevation of the infiltration facility, and the runoff to the infiltration facility is from more than one acre.

3.3.6 Design Saturated Hydraulic Conductivity – Guidelines and Criteria

Measured (initial) saturated hydraulic conductivity (Ksat)rates can be determined using in-situ field measurements, or, if the site has soils unconsolidated by glacial advance, by a correlation to grain size distribution from soil samples. The latter method uses the ASTM soil size distribution test procedure (ASTM D422), which considers the full range of soil particle sizes, to develop soil size distribution curves. Using the Simplified Approach in Section 3.3.4, the estimate obtained for the measured (initial) K_{sat} is used as the initial infiltration rate. Using the Detailed Approach in Section 3.3.8, the initial Ksat is combined with other information to compute an estimate for an initial infiltration rate.

Three Methods for Determining Saturated Hydraulic Conductivity for Sizing Infiltration Facilities

For designing the infiltration facility the site professional should select one of the three methods described below that will best represent the measured (a.k.a., initial) saturated hydraulic conductivity (K_{sat}) rate at the site. Use the measured saturated hydraulic conductivity to determine the design (long-term) infiltration rate. Then use the design (long-term) infiltration rate for routing and sizing the basin/trench, and for checking for compliance with the maximum drawdown time of 48 hours.

In the Simplified Approach (Section 3.3.4), the design infiltration rate is derived by applying appropriate correction factors to the measured K_{sat} as specified below.

In the Detailed Approach (Section 3.3.8), the design infiltration rate is derived by applying correction factors and additional equations to the measured (initial) $K_{sat.}$ Verification testing of the completed facility is strongly encouraged. (See Site Suitability Criterion # 7-Verification Testing)

1. Large Scale Pilot Infiltration Test (PIT)

Large-scale in-situ infiltration measurements, using the Pilot Infiltration Test (PIT) described below is the preferred method for estimating the measured (initial) saturated hydraulic conductivity (K_{sat}) of the soil profile beneath the proposed infiltration facility. The PIT reduces some of the scale errors associated with relatively small-scale double ring infiltrometer or "stove-pipe" infiltration tests. It is not a standard test but rather a practical field procedure recommended by Ecology's Technical Advisory Committee.

Infiltration Test

- Excavate the test pit to the estimated surface elevation of the proposed infiltration facility. Lay back the slopes sufficiently to avoid caving and erosion during the test. Alternatively, consider shoring the sides of the test pit.
- The horizontal surface area of the bottom of the test pit should be approximately 100 square feet. Accurately document the size and geometry of the test pit.
- Install a vertical measuring rod (minimum 5-ft. long) marked in half-inch increments in the center of the pit bottom.
- Use a rigid 6-inch diameter pipe with a splash plate on the bottom to convey water to the pit and reduce side-wall erosion or excessive disturbance of the pond bottom. Excessive erosion and bottom disturbance will result in clogging of the infiltration receptor and yield lower than actual infiltration rates.
- Add water to the pit at a rate that will maintain a water level between 6 and 12 inches above the bottom of the pit. A rotameter can be used to measure the flow rate into the pit.

  Note: The depth should not exceed the proposed maximum depth of water expected in the completed facility. For infiltration facilities serving large drainage areas, designs with multiple feet of standing water can have infiltration tests with greater than 1 foot of standing water.

Every 15-30 min, record the cumulative volume and instantaneous flow rate in gallons per minute necessary to maintain the water level at the same point on the measuring rod.

Keep adding water to the pit until one hour after the flow rate into the pit has stabilized (constant flow rate; a goal of 5% variation or less variation in the total flow) while maintaining the same pond water level. The total of the pre-soak time plus one hour after the flow rate has stabilized should be no less than 6 hours.

- After the flow rate has stabilized for at least one hour, turn off the water and record the rate of infiltration (the drop rate of the standing water) in inches per hour from the measuring rod data, until the pit is empty. Consider running this falling head phase of the test several times to estimate the dependency of infiltration rate with head.
- At the conclusion of testing, over-excavate the pit to see if the test water is mounded on shallow restrictive layers or if it has continued to flow deep into the subsurface. The depth of excavation varies depending on soil type and depth to hydraulic restricting layer, and is determined by the engineer or certified soils professional. Mounding is an indication that a mounding analysis is necessary.

Data Analysis

Calculate and record the saturated hydraulic conductivity rate in inches per hour in 30 minutes or one-hour increments until one hour after the flow has stabilized.

Note: Use statistical/trend analysis to obtain the hourly flow rate when the flow stabilizes. This would be the lowest hourly flow rate.

Apply appropriate correction factors to determine the site-specific design infiltration rate. See the discussion of correction factors for infiltration facilities in this Section 3.3, and the discussion of correction factors for bioretention facilities and permeable pavement in Section 3.4.

Example

The area of the bottom of the test pit is 8.5-ft. by 11.5-ft.

Water flow rate was measured and recorded at intervals ranging from 15 to 30 minutes throughout the test. Between 400 minutes and 1,000 minutes the flow rate stabilized between 10 and 12.5 gallons per minute or 600 to 750 gallons per hour, or an average of (9.8 + 12.3) / 2 = 11.1 inches per hour.

2. <u>Small-Scale Pilot Infiltration Test</u>

A smaller-scale PIT can be substituted for the large-scale PIT in any of the following instances.

- The drainage area to the infiltration site is less than 1 acre.

- The testing is for the LID BMP's of bioretention or permeable pavement that either serve small drainage areas and /or are widely dispersed throughout a project site.
- The site has a high infiltration rate, making a full-scale PIT difficult, and the site geotechnical investigation suggests uniform subsurface characteristics.

Infiltration Test

- Excavate the test pit to the estimated surface elevation of the proposed infiltration facility. In the case of bioretention, excavate to the estimated elevation at which the imported soil mix will lie on top of the underlying native soil. For permeable pavements, excavate to the elevation at which the imported subgrade materials, or the pavement itself, will contact the underlying native soil. If the native soils (road subgrade) will have to meet a minimum subgrade compaction requirement, compact the native soil to that requirement prior to testing. Note that the permeable pavement design guidance recommends compaction not exceed 90% - 92%. Finally, lay back the slopes sufficiently to avoid caving and erosion during the test. Alternatively, consider shoring the sides of the test pit.
- The horizontal surface area of the bottom of the test pit should be 12 to 32 square feet. It may be circular or rectangular, but accurately document the size and geometry of the test pit.
- Install a vertical measuring rod adequate to measure the ponded water depth and that is marked in half-inch increments in the center of the pit bottom.
- Use a rigid pipe with a splash plate on the bottom to convey water to the pit and reduce side-wall erosion or excessive disturbance of the pond bottom. Excessive erosion and bottom disturbance will result in clogging of the infiltration receptor and yield lower than actual infiltration rates. Use a 3 inch diameter pipe for pits on the smaller end of the recommended surface area, and a 4 inch pipe for pits on the larger end of the recommended surface area.
- Pre-soak period: Add water to the pit so that there is standing water for at least 6 hours. Maintain the pre-soak water level at least 12 inches above the bottom of the pit.
- At the end of the pre-soak period, add water to the pit at a rate that will maintain a 6-12 inch water level above the bottom of the pit over a full hour. The depth should not exceed the proposed maximum depth of water expected in the completed facility.
- Every 15 minutes, record the cumulative volume and instantaneous flow rate in gallons per minute necessary to maintain the water level at the same point (between 6 inches and 1 foot) on the measuring rod.

The specific depth should be the same as the maximum designed ponding depth (usually 6 – 12 inches).

- After one hour, turn off the water and record the rate of infiltration (the drop rate of the standing water) in inches per hour from the measuring rod data, until the pit is empty.
- A self-logging pressure sensor may also be used to determine water depth and drain-down.
- At the conclusion of testing, over-excavate the pit to see if the test water is mounded on shallow restrictive layers or if it has continued to flow deep into the subsurface. The depth of excavation varies depending on soil type and depth to hydraulic restricting layer, and is determined by the engineer or certified soils professional. The soils professional should judge whether a mounding analysis is necessary.

Data Analysis

See the explanation under the guidance for large-scale pilot infiltration tests.

3. <u>Soil Grain Size Analysis Method</u>

For each defined layer below the infiltration pond to a depth below the pond bottom of 2.5 times the maximum depth of water in the pond, but not less than 10 feet, estimate the initial saturated hydraulic conductivity (K_{sat}) in cm/sec using the following relationship (see Massmann 2003, and Massmann et al., 2003). For large infiltration facilities serving drainage areas of 10 acres or more, soil grain size analyses should be performed on layers up to 50 feet deep (or no more than 10 feet below the water table).

$$\log_{10}(K_{sat}) = -1.57 + 1.90D_{10} + 0.015D_{60} - 0.013D_{90} - 2.08\mathrm{f}_{\mathrm{fines}} \qquad (1)$$

Where, D_{10}, D_{60} and D_{90} are the grain sizes in mm for which 10 percent, 60 percent and 90 percent of the sample is more fine and f_{fines} is the fraction of the soil (by weight) that passes the number-200 sieve (K_{sat} is in cm/s).

For bioretention facilities, analyze each defined layer below the top of the final bioretention area subgrade to a depth of at least 3 times the maximum ponding depth, but not less than 3 feet (1 meter). For permeable pavement, analyze for each defined layer below the top of the final subgrade to a depth of at least 3 times the maximum ponding depth within the base course, but not less than 3 feet (1 meter).

If the licensed professional conducting the investigation determines that deeper layers will influence the rate of infiltration for the facility, soil layers at greater depths must be considered when assessing the site's hydraulic conductivity characteristics. Massmann (2003) indicates that where the water table is deep, soil or rock strata up to 100 feet below an

infiltration facility can influence the rate of infiltration. Note that only the layers near and above the water table or low permeability zone (e.g., a clay, dense glacial till, or rock layer) need to be considered, as the layers below the ground water table or low permeability zone do not significantly influence the rate of infiltration. Also note that this equation for estimating Ksat assumes minimal compaction consistent with the use of tracked (i.e., low to moderate ground pressure) excavation equipment.

If the soil layer being characterized has been exposed to heavy compaction (e.g., due to heavy equipment with narrow tracks, narrow tires, or large lugged, high pressure tires) the hydraulic conductivity for the layer could be approximately an order of magnitude less than what would be estimated based on grain size characteristics alone (Pitt, 2003). In such cases, compaction effects must be taken into account when estimating hydraulic conductivity.

For clean, uniformly graded sands and gravels, the reduction in K_{sat} due to compaction will be much less than an order of magnitude. For well-graded sands and gravels with moderate to high silt content, the reduction in K_{sat} will be close to an order of magnitude. For soils that contain clay, the reduction in K_{sat} could be greater than an order of magnitude.

If greater certainty is desired, the in-situ saturated conductivity of a specific layer can be obtained through the use of a pilot infiltration test (PIT). Note that these field tests generally provide a K_{sat} combined with a hydraulic gradient (i.e., Equation 5 in Section 3.3.8). In some of these tests, the hydraulic gradient may be close to 1.0; therefore, in effect, the test infiltration rate result is the same as the hydraulic conductivity. In other cases, the hydraulic gradient may be close to the gradient that is likely to occur in the full-scale infiltration facility. The hydraulic gradient will need to be evaluated on a case-by-case basis when interpreting the results of field tests. It is important to recognize that the gradient in the test may not be the same as the gradient likely to occur in the full-scale infiltration facility in the long-term (i.e., when ground water mounding is fully developed).

Once the K_{sat} for each layer has been identified, determine the effective average K_{sat} below the pond. K_{sat} estimates from different layers can be combined using the harmonic mean:

$$K_{equiv} = \frac{d}{\sum \frac{d_i}{K_i}} \qquad (2)$$

Where, d is the total depth of the soil column, d_i is the thickness of layer "i" in the soil column, and K_i is the saturated hydraulic conductivity of

layer "*i*" in the soil column. The depth of the soil column, *d*, typically would include all layers between the pond bottom and the water table. However, for sites with very deep water tables (>100 feet) where ground water mounding to the base of the pond is not likely to occur, it is recommended that the total depth of the soil column in Equation 2 be limited to approximately 20 times the depth of pond, but not more than 50 feet. This is to ensure that the most important and relevant layers are included in the hydraulic conductivity calculations. Deep layers that are not likely to affect the infiltration rate near the pond bottom should not be included in Equation 2.

Equation 2 may over-estimate the effective K_{sat} value at sites with low conductivity layers immediately beneath the infiltration pond. For sites where the lowest conductivity layer is within five feet of the base of the pond, it is suggested that this lowest K_{sat} value be used as the equivalent hydraulic conductivity rather than the value from Equation 2. Using the layer with the lowest K_{sat} is advised for designing bioretention facilities or permeable pavements. The harmonic mean given by Equation 2 is the appropriate effective hydraulic conductivity for flow that is perpendicular to stratigraphic layers, and will produce conservative results when flow has a significant horizontal component such as could occur due to ground water mounding.

Correction Factors

Correction Factors for PIT results and Grain Size Method - The K_{sat} obtained from the PIT test or Grain Size Method is a measured (initial) rate. This measured rate must be reduced through correction factors that are appropriate for the design situation to produce a design infiltration rate. This adjustment is made in Step 5 of the Design of Infiltration Facilities (Section 3.3.4).

Correction factors account for site variability, number of tests conducted, uncertainty of the test method, and the potential for long-term clogging due to siltation and bio-buildup. Table 3.3.1 summarizes the typical range of correction factors to account for these issues. The specific correction factors used shall be determined based on the professional judgment of the licensed engineer or other site professional considering all issues that may affect the infiltration rate over the long term, subject to the approval of the local jurisdictional authority.

Table 3.3.1 Correction Factors to be Used With In-Situ Saturated Hydraulic Conductivity Measurements to Estimate Design Rates.	
Issue	**Partial Correction Factor**
Site variability and number of locations tested	CF_v = 0.33 to 1.0
Test Method Large-scale PIT Small-scale PIT Other small-scale (e.g. Double ring, falling head) Grain Size Method	 CF_t = 0.75 = 0.50 = 0.40 = 0.40
Degree of influent control to prevent siltation and bio-buildup	CF_m = 0.9

Total Correction Factor, $CF_T = CF_v \times CF_t \times CF_m$

CF_T is used in step 5 of the Design of Infiltration Facilities (Section 3.3.4) to adjust the measured (initial) saturated hydraulic conductivity.

$K_{sat\ design} = K_{sat\ initial} \times CF_T$

Site variability and number of locations tested (CF_v) - The number of locations tested must be capable of producing a picture of the subsurface conditions that fully represents the conditions throughout the facility site. The partial correction factor used for this issue depends on the level of uncertainty that adverse subsurface conditions may occur. If the range of uncertainty is low - for example, conditions are known to be uniform through previous exploration and site geological factors - one pilot infiltration test (or grain size analysis location) may be adequate to justify a partial correction factor at the high end of the range.

If the level of uncertainty is high, a partial correction factor near the low end of the range may be appropriate. This might be the case where the site conditions are highly variable due to conditions such as a deposit of ancient landslide debris, or buried stream channels. In these cases, even with many explorations and several pilot infiltration tests (or several grain size test locations), the level of uncertainty may still be high.

A partial correction factor near the low end of the range could be assigned where conditions have a more typical variability, but few explorations and only one pilot infiltration test (or one grain size analysis location) is conducted. That is, the number of explorations and tests conducted do not match the degree of site variability anticipated.

Uncertainty of test method (CF_t) accounts for uncertainties in the testing methods. For the full scale PIT method, CF_t = 0.75; for the small-scale PIT method, CF_t = 0.50; for smaller-scale infiltration tests such as the double-ring infiltrometer test, CF_t = 0.40; for grain size analysis, CF_t =

0.40. These values are intended to represent the difference in each test's ability to estimate the actual saturated hydraulic conductivity. The assumption is the larger the scale of the test, the more reliable the result.

Degree of influent control to prevent siltation and bio-buildup (CF_m)
Even with a pre-settling basin or a basic treatment facility for pre-treatment, the soil's initial infiltration rate will gradually decline as more and more stormwater, with some amount of suspended material, passes through the soil profile. The maintenance schedule calls for removing sediment when the facility is infiltrating at only 90% of its design capacity. Therefore, a correction factor, CF_m, of 0.9 is called for.

This correction is used in Step 5 of the Design of Infiltration Facilities (Section 3.3.4).

3.3.7 Site Suitability Criteria (SSC)

This section provides criteria that must be considered for siting infiltration systems. When a site investigation reveals that any of the applicable criteria cannot be met appropriate mitigation measures must be implemented so that the infiltration facility will not pose a threat to safety, health, and the environment.

For site selection and design decisions a geotechnical and hydrogeologic report should be prepared by a licensed engineer with geotechnical and hydrogeologic experience, or a licensed geologist, hydrogeologist, or engineering geologist. The design engineer may utilize a team of certified or registered professionals in soil science, hydrogeology, geology, and other related fields.

SSC-1 Setback Criteria

Setback requirements are generally required by local regulations, uniform building code requirements, or other state regulations.

These Setback Criteria are provided as guidance.

- Stormwater infiltration facilities should be set back at least 100 feet from drinking water wells, septic tanks or drainfields, and springs used for public drinking water supplies. Infiltration facilities upgradient of drinking water supplies and within 1, 5, and 10-year time of travel zones must comply with Health Dept. requirements (Washington State Wellhead Protection Program Guidance Document, DOH, 6/2010). Infiltration systems that qualify as Underground Injection Control Wells must comply with Chapter xd173-218 and follow "Guidance for UIC Wells that Manage Stormwater," Publication No. 05-10-067, Washington Dept. of Ecology, 12/06.

- Additional setbacks must be considered if roadway deicers or herbicides are likely to be present in the influent to the infiltration system
- From building foundations; ≥ 20 feet downslope and ≥100 feet upslope
- From a Native Growth Protection Easement (NGPE); ≥20 feet
- From the top of slopes >15%; ≥ 50 feet.
- Evaluate on-site and off-site structural stability due to extended subgrade saturation and/or head loading of the permeable layer, including the potential impacts to downgradient properties, especially on hills with known side-hill seeps.

SSC-2 Ground Water Protection Areas

A site is not suitable if the infiltration facility will cause a violation of Ecology's Ground Water Quality Standards (Chapter 173-200 WAC). (See SSC-3~~9~~ through SSC-6, and SSC-8 for measures to protect ground water quality. ~~for verification testing guidance).~~ Cons~~l~~ult local jurisdictions for applicable pollutant removal requirements upstream of the infiltration facility, and to determine whether the site is located in an aquifer sensitive area, sole source aquifer, or a wellhead protection zone.

SSC-3 High Vehicle Traffic Areas

An infiltration BMP may be considered for runoff from areas of industrial activity and the high vehicle traffic areas described below. For such applications, provide sufficient pollutant removal (including oil removal) upstream of the infiltration facility to ensure that ground water quality standards will not be violated and that the infiltration facility is not adversely affected.

High Vehicle Traffic Areas are:

- Commercial or industrial sites subject to an expected average daily traffic count (ADT) ≥100 vehicles/1,000 ft² gross building area (trip generation).
- Road intersections with an ADT of ≥ 25,000 on the main roadway and ≥ 15,000 on any intersecting roadway.

SSC-4 Soil Infiltration Rate/Drawdown Time

Infiltration Rates: measured (initial) and design (long-term):

For infiltration facilities used for treatment purposes, the measured (initial) soil infiltration rate should be 9 in./hour, or less. Design (long-term) infiltration rates up to 3.0 inches/hour can also be considered, if the infiltration receptor is not a sole-source aquifer, and in the judgment of the site professional, the treatment soil has characteristics comparable to those specified in SSC-6 to adequately control the target pollutants.

The design infiltration rate should also be used for maximum drawdown time and routing calculations.

Drawdown time:

For infiltration facilities designed strictly for flow control purposes, there isn't a maximum drawdown time. If sizing a treatment facility, document that the water quality design storm volume- (indicated by WWHM or MGS Flood, or runoff from a 6-month, 24-hour rain event) can infiltrate through the infiltration basin surface within 48 hours. This can be calculated multiplying the horizontal projection of the infiltration basin mid-depth dimensions by the estimated design infiltration rate, and multiplying the result by 48 hours.

This drawdown restriction is intended to meet the following objectives:

- Aerate vegetation and soil to keep the vegetation healthy.
- Enhance the biodegradation of pollutants and organics in the soil.

Note: This is a check procedure, not a method for determining basin size. If the design fails the check procedure, redesign the basin.

SSC-5 Depth to Bedrock, Water Table, or Impermeable Layer

The base of all infiltration basins or trench systems shall be ≥ 5 feet above the seasonal high-water mark, bedrock (or hardpan) or other low permeability layer. A separation down to 3 feet may be considered if the ground water mounding analysis, volumetric receptor capacity, and the design of the overflow and/or bypass structures are judged by the site professional to be adequate to prevent overtopping and meet the site suitability criteria specified in this section.

SSC-6 Soil Physical and Chemical Suitability for Treatment

(Applies to infiltration facilities used as treatment facilities not to facilities used for flow control).

Consider the soil texture and design infiltration rates along with the physical and chemical characteristics specified below to determine if the soil is adequate for removing the target pollutants. The following soil properties must be carefully considered in making such a determination:

- Cation exchange capacity (CEC) of the treatment soil must be ≥5 milliequivalents CEC/100 g dry soil (USEPA Method 9081). *Consider empirical testing of soil sorption capacity, if practicable*. Ensure that soil CEC is sufficient for expected pollutant loadings, particularly heavy metals. CEC values of >5 meq/100g are expected in loamy sands (Buckman and Brady, 1969)~~, according to Rawls, et al~~. Lower CEC content may be considered if it is based on a soil loading capacity determination for the target pollutants that is accepted by the local jurisdiction.

- Depth of soil used for infiltration treatment must be a minimum of 18 inches. Depth of soil below permeable pavements serving as pollution-generating hard surfaces may be reduced to one foot if the permeable pavement does not accept run-on from other surfaces.
- Organic Content of the treatment soil (ASTM D 2974): Organic matter can increase the sorptive capacity of the soil for some pollutants. A minimum of 1.0 percent organic content is necessary.
- Waste fill materials shall not be used as infiltration soil media nor shall such media be placed over uncontrolled or non-engineered fill soils.

Engineered soils may be used to meet the design criteria in this chapter and the performance goals in Chapters 3 and 4 of Volume V. Field performance evaluation(s), using protocols cited in this manual, would be needed to determine feasibility and acceptability by the local jurisdiction.

SSC-7 Seepage Analysis and Control

Determine whether there would be any adverse effects caused by seepage zones on nearby building foundations, basements, roads, parking lots or sloping sites.

SSC-8 Cold Climate and Impact of Roadway Deicers

Consider the potential impact of roadway deicers on potable water wells in the siting determination. Implement mitigation measures if the infiltration of roadway deicers could cause a violation of ground water quality standards.

3.3.8 Steps for Designing Infiltration Facilities - Detailed Approach

This detailed approach was obtained from Massmann (2003). The detailed approach includes the process in Figure 3.3.3 and the following steps:

1 – 5. Steps 1 through 5 are the same as indicated for the Simplified Approach – Section 3.3.4

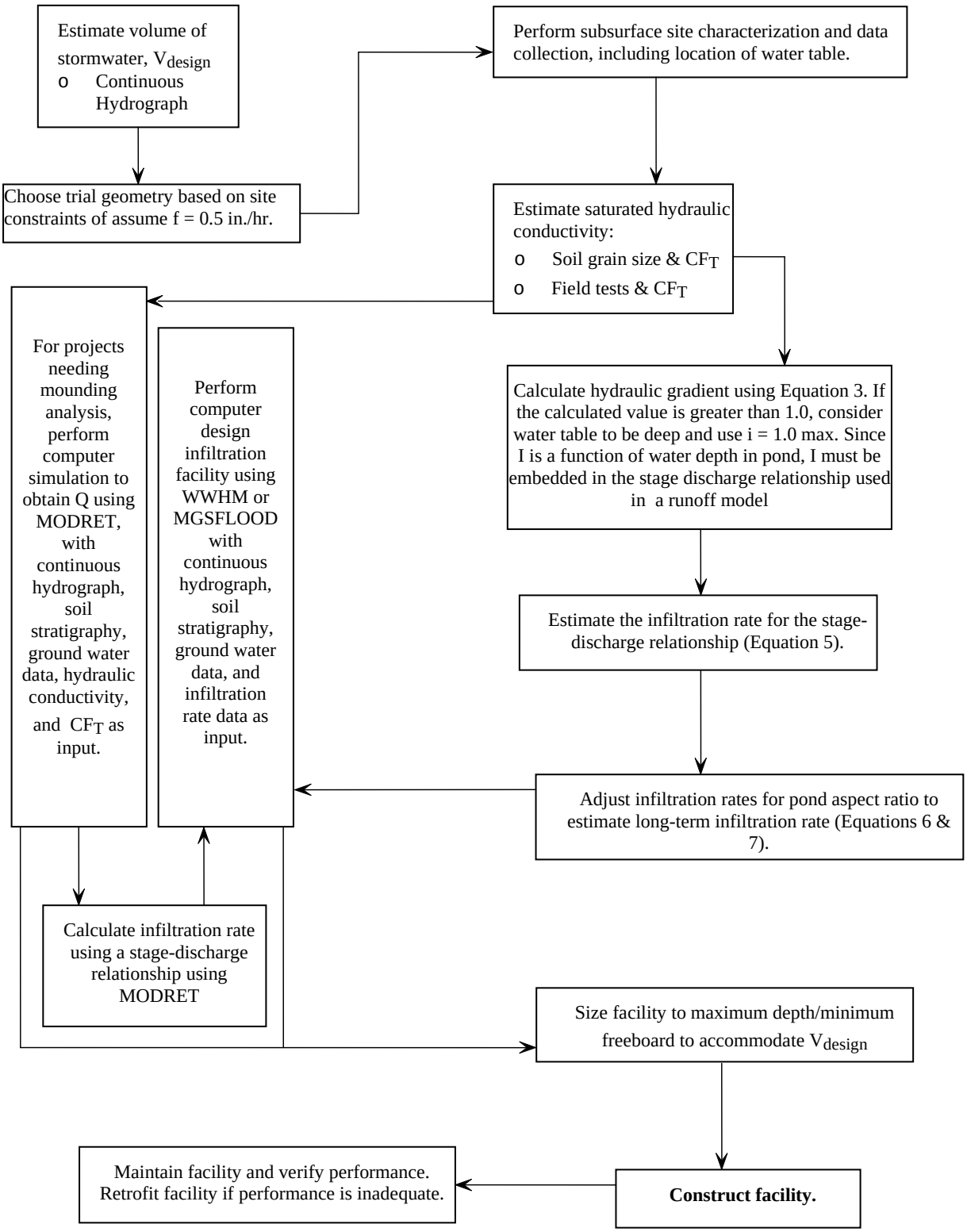

Figure 3.3.3 - Engineering Design Steps for Final Design of Infiltration Facilities Using the Detailed Method

6. Calculate the hydraulic gradient as follows:

Calculate the steady state hydraulic gradient as follows:

$$\text{gradient} = \text{i} \approx \frac{D_{wt} + D_{pond}}{138.62(K^{0.1})} CF_{size} \qquad (3)$$

Note: The units in this equation vary from the units normally used in this manual.

Where, D_{wt} is the depth from the base of the infiltration facility to the water table in feet, K is the saturated hydraulic conductivity in feet/day, D_{pond} is one-quarter of the maximum depth of water in the facility in feet (see Massmann et al., 2003, for the development of this equation), and CF_{size}, is the correction for pond size. The correction factor was developed for ponds with bottom areas between 0.6 and 6 acres in size. For small ponds (ponds with area equal to 2/3 acre), the correction factor is equal to 1.0. For large ponds (ponds with area equal to 6 acres), the correction factor is 0.2, as shown in Equation 4.

$$CF_{size} = 0.73(A_{pond})^{-0.76} \qquad (4)$$

Where, A_{pond} is the area of pond bottom in acres. This equation generally will result in a calculated gradient of less than 1.0 for moderate to shallow ground water depths (or to a low permeability layer) below the facility, and conservatively accounts for the development of a ground water mound. A more detailed ground water mounding analysis using a program such as MODFLOW will usually result in a gradient that is equal to or greater than the gradient calculated using Equation 3. If the calculated gradient is greater than 1.0, the water table is considered to be deep, and a maximum gradient of 1.0 must be used. Typically, a depth to ground water of 100 feet or more is required to obtain a gradient of 1.0 or more using this equation. Since the gradient is a function of depth of water in the facility, the gradient will vary as the pond fills during the season. The gradient could be calculated as part of the stage-discharge calculation used in the continuous runoff models. As of the date of this update, neither the WWHM nor MGSFlood have that capability. However, updates to those models may soon incorporate the capability. Until that time, use a steady-state hydraulic gradient that corresponds with a ponded depth of ¼ of the maximum ponded depth – as measured from the basin floor to the overflow.

7. Calculate the preliminary design infiltration rate using Darcy's law as follows:

$$f = K\left(\frac{dh}{dz}\right) = Ki \qquad (5)$$

Where, f is the specific discharge or infiltration rate of water through a unit cross-section of the infiltration facility (L/t), K is the hydraulic conductivity (L/t), dh/dz is the hydraulic gradient (L/L), and "i" is the gradient.

8. Adjust the preliminary design infiltration rate or infiltration stage-discharge relationship obtained in Step 7:

Adjustments of the initial infiltration rate estimate should have been made in Step 5. (As explained in Section 3.3.7).

This step adjusts the preliminary design infiltration rate for the effect of pond aspect ratio by multiplying the infiltration rate determined in Step 7 by the aspect ratio correction factor F_{aspect} as shown in the following equation:

$$CF_{aspect} = 0.02A_r + 0.98 \quad (6)$$

Where, A_r is the aspect ratio for the pond (length/width of the bottom area). In no case shall CF_{aspect} be greater than 1.4.

The final design (long-term) infiltration rate will therefore be as follows:

$$f = K \bullet i \bullet CF_{aspect} \quad (7)$$

9. Size the facility:

Size the facility to ensure that the maximum pond depth is between 2 to 6 feet with one-foot minimum required freeboard.

Where the infiltration facility is being used to meet treatment requirements, check that the Water Quality Design Storm Volume (indicated by WWHM or MGS Flood) can infiltrate through the infiltration basin surface within 48 hours. This can be calculated by multiplying a horizontal projection of the infiltration basin mid-depth dimensions by the estimated design infiltration rate; and multiplying the result by 48 hours (See SSC-4 in Section 3.3.7)

10. Ground Water Mounding Analysis:

Ground water Mounding Analysis: On projects where an infiltration facility has a drainage area exceeding 1 acre and has less than fifteen feet depth to seasonal high ground water (as measured from the bottom of the infiltration basin or trench) or other low permeability stratum, determine the final design infiltration rate using an analytical ground water model to investigate the effects of the local hydrologic conditions on facility performance. These larger projects can use the design infiltration rate determined above as input to an approved continuous runoff model (WWHM, MGS Flood, KCRTS) to do an initial sizing. Then complete the ground water modeling (mounding analysis) of the proposed infiltration facility. Use MODRET or an equivalent model unless the local government approves an alternative analytic technique.

Export the full output hydrograph of the developed condition and use it as input to MODRET. Note that an iterative process may be required beginning with an estimated design rate, WWHM sizing, then ground water model testing. See Figure 3.3.3.

11. Construct the facility & Conduct Performance Testing:

Test amd monitor the constructed facility to demonstrate that the facility performs as designed. Use the same test methods for saturated hydraulicconductivity as used in the planning stages so that results are comparable. Perform the testing after stabilizing the construction site. Submit the results and comparisons to the pre-project measured (initial) and design rates to the local stormwater authority that approved the project design. If the rates are lower than the design saturated hydraulic conductivity, the applicant shall implement measures to improve infiltration capability within the footprint of the constructed facility and re-test. If less intensive measures prove unsuccessful, replacement of the top foot of soil – or more if visual observation indicates deeper fouling of the bed with fine sediment – with a soil meeting the design needs (i.e., treatment, flow control, or both) shall be provided. Longer-term monitoring of drawdown times and periodic testing of the facility should provide an indication of when the facility needs maintenance to restore infiltration rates.

3.3.9 General Design, Maintenance, and Construction Criteria for Infiltration Facilities

This section covers design, construction and maintenance criteria that apply to infiltration basins and trenches.

Design Criteria – Sizing Facilities

The size of the infiltration facility can be determined by routing the influent runoff file generated by the continuous runoff model through it. To prevent the onset of anaerobic conditions, an infiltration facility designed for treatment purposes must be designed to drain the Water Quality Design volume within 48 hours (see explanation under SSC-4 in Section 3.3.7). In general, an infiltration facility would have 2 discharge modes. The primary mode of discharge from an infiltration facility is infiltration into the ground. However, when the infiltration capacity of the facility is reached, additional runoff to the facility will cause the facility to overflow. Overflows from an infiltration facility must comply with the Minimum Requirement #7 for flow control in Volume I. Infiltration facilities used for runoff treatment must not overflow more than 9% of the influent runoff file. Infiltration facilities can also be used to demonstrate compliance with the LID Performance Standard of Minimum Requirement #5.

In order to determine compliance with the flow control requirements, use the Western Washington Hydrology Model (WWHM), or an appropriately

calibrated continuous simulation model based on HSPF. When using WWHM for simulating flow through an infiltrating facility, represent the facility by using a Pond Element and entering the pre-determined infiltration rates. Below are the procedures for sizing a pond (A) to completely infiltrate 100% of runoff; (B) to treat 91% of runoff to meet the water quality treatment requirements, and (C) to partially infiltrate runoff to meet flow duration standard.

(A) For 100% infiltration

1. Input dimensions of your infiltration pond,
2. Input infiltration rate and safety (rate reduction) factor. When using the Simplified Approach, you may enter the measured (initial) saturated hydraulic conductivity (Ksat) and the Total Correction Factor as determined using Section 3.3.6; OR, enter the estimated final design infiltration rate after application of the correction factor and a safety factor of 1. For the Detailed Approach, you should enter your preliminary design infiltration rate after completing Steps 1 through 7 (in Section 3.3.8). Then enter the correction factor for the pond aspect, as noted in Step 8 (in Section 3.3.8), as the safety factor in the model input
3. Input a riser height and diameter (any flow through the riser indicates that you have less than 100% infiltration and must increase your infiltration pond dimensions).
4. Run only HSPF for Developed Mitigated Scenario (if that is where you put the infiltration pond). Don't need to run duration.
5. Go back to your infiltration pond and look at the Percentage Infiltrated at the bottom right. If less than 100% infiltrated, increase pond dimension until you get 100%.

(B) For 91% infiltration (water quality treatment volume)

The procedure is the same as above, except that your target is 91%.

Infiltration facilities for treatment can be located upstream or downstream of detention and can be off-line or on-line.

On-line treatment facilities placed ***upstream or downstream*** of a detention facility must be sized to infiltrate 91% of the runoff file volume directed to it.

Off-line treatment facilities placed ***upstream*** of a detention facility must have a flow splitter designed to send all flows at or below the 15-minute water quality flow rate, as predicted by WWHM (or other approved continuous runoff model), to the treatment facility. Within WWHM, the flow splitter element is placed ahead of the pond element which represents the infiltration basin. Size the treatment facility to infiltrate all the runoff sent to it (no overflows from the treatment facility are allowed).

Off-line treatment facilities placed ***downstream*** of a detention facility must have a flow splitter designed to send all flows at or below the 2-year flow frequency from the detention pond, as predicted by WWHM (or other approved continuous runoff model), to the treatment facility. Within WWHM, the flow splitter element is placed ahead of the pond element which represents the infiltration basin. Size the treatment facility to infiltrate all the runoff sent to it (no overflows from the treatment facility are allowed).

See Section 4.5 of Volume V for flow splitter design details.

(C) To meet flow duration standard with infiltration ponds

This design will allow something less than 100% infiltration as long as any overflows will meet the flow duration standard. Use a discharge structure with orifices and risers similar to a detention facility and include infiltration occurring from the pond..

Additional Design Criteria

- Slope of the base of the infiltration facility should be <3 percent.
- Spillways/overflow structures – Construct a nonerodible outlet or spillway with a firmly established elevation to discharge overflow. Calculate ponding depth, drawdown time, and storage volume from that reference point. Overflow Structure-Refer to Chapter 2 for design details
- For infiltration treatment facilities, side-wall seepage is not a concern if seepage occurs through the same stratum as the bottom of the facility. However, for engineered soils or for soils with very low permeability, the potential to bypass the treatment soil through the side-walls may be significant. In those cases, line the side-walls with at least 18 inches of treatment soil to prevent seepage of untreated flows through the side walls.

Design Criteria – Pretreatment

A facility to remove a portion of the influent suspended solids should precede the infiltration facility. Use either an option under the basic treatment facility menu (See Chapter 2 of Volume V), or a pretreatment option from Chapter 6 of Volume V. The lower the influent suspended solids loading to the infiltration facility, the longer the infiltration facility can infiltrate the desired amount of water or more, and the longer interval between maintenance activity.

In facilities such as infiltration trenches where a reduction in infiltration capability can have significant maintenance or replacement costs, selection of a reliable treatment device with high solids removal capability is preferred. In facilities that allow easier access for maintenance and less costly maintenance activity (e.g., infiltration basins with gentle side slopes), there is a trade-off between using a treatment device with a higher

solids removal capability and a device with a lower capability. Generally, treatment options on the basic treatment menu are more capable at solids removal than pretreatment devices listed in Chapter 6 of Volume V. Though basic treatment options may be higher in initial cost and space demands, the infiltration facility should have lower maintenance costs.

Construction Criteria

- Conduct initial basin excavation to within 1-foot of the final elevation of the basin floor. Excavate infiltration trenches and basins to final grade only after all disturbed areas in the upgradient project drainage area have been permanently stabilized. The final phase of excavation should remove all accumulation of silt in the infiltration facility before putting it in service. After construction completion, prevent sediment from entering the infiltration facility by first conveying the runoff water through an appropriate pretreatment system such as a pre-settling basin, wet pond, or sand filter.
- Generally, do not use infiltration facilities as temporary sediment traps during construction. If an infiltration facility will be used as a sediment trap, do not excavated to final grade until after the stabilizing the upgradient drainage area. Remove any accumulation of silt in the basin putting it in service.
- Traffic Control – Relatively light-tracked equipment is recommended for this operation to avoid compaction of the basin floor. Consider the use of draglines and trackhoes for constructing infiltration basins. Flag or mark the infiltration area to keep heavy equipment away.

Maintenance Criteria

Make provisions for regular and perpetual maintenance of the infiltration basin/trench, including replacement and/or reconstruction of the any media relied upon for treatment purposes. Conduct maintenance when water remains in the basin or trench for more than 24 hours after the end of runoff, or when overflows occur more frequently than planned. For example, off-line infiltration facilities should not have any overflows. Infiltration facilities designed to completely infiltrate all flows to meet flow control standards should not overflow. An Operation and Maintenance Plan, approved by the local jurisdiction, should ensure maintaining the desired infiltration rate.

Include adequate access for operation and maintenance in the design of infiltration basins and trenches.

Conduct removal of accumulated debris/sediment in the basin/trench every 6 months or as needed to prevent clogging. Indications that the facility is not infiltrating adequately include:

- The Water Quality Design Storm Volume does not infiltrate within 48 hours.

- Water remains in the pond for greater than 24 hours after the end of most moderate rainfall events.

For more detailed information on maintenance, see Volume V, Section 4.6 – Maintenance Standards for Drainage Facilities.

Verification of Performance

During the first 1-2 years of operation verification testing (specified in SSC-9) is strongly recommended, along with a maintenance program that results in achieving expected performance levels. Operating and maintaining ground water monitoring wells (specified in Section 3.3.7 - Site Suitability Criteria) is also strongly encouraged.

3.3.10 Infiltration Basins

This section covers design and maintenance criteria specific for infiltration basins. (See Figure 3.3.4).

Description:

Infiltration basins are earthen impoundments used for the collection, temporary storage and infiltration of incoming stormwater runoff.

Design Criteria Specific for Basins

- Provide access for vehicles to easily maintain the forebay (presettling basin) area and not disturb vegetation, or resuspend sediment any more than absolutely necessary.
- The slope of the basin bottom should not exceed 3% in any direction.
- Size the basin for a maximum ponding depth of between 2 and 6 feet.
- A minimum of one foot of freeboard is recommended when establishing the design ponded water depth. Freeboard is measured from the rim of the infiltration facility to the maximum ponding level or from the rim down to the overflow point if overflow or a spillway is included.
- Treatment infiltration basins must have sufficient vegetation established on the basin floor and side slopes to prevent erosion and sloughing and to provide additional pollutant removal. Provide erosion protection of inflow points to the basin (e.g., riprap, flow spreaders, energy dissipators). Select suitable vegetative materials to stabilize the basin floor and side slopes. Refer to detention pond guidance earlier in this chapter for recommended vegetation.
- Lining material – Basins can be open or covered with a 6 to 12-inch layer of filter material such as coarse sand, or a suitable filter fabric to help prevent the buildup of impervious deposits on the soil surface. Select a nonwoven geotextile that will function sufficiently without plugging (see geotextile specifications in Appendix V-C of Volume V). Replace or clearn the filter layer when/if it becomes clogged.

- Vegetation – Stabilize the embankment, emergency spillways, spoil and borrow areas, and other disturbed areas and plant, preferably with grass, in accordance with Stormwater Site Plan (See Minimum Requirement #1 of Volume I). Without healthy vegetation, the surface soil pores will quickly plug.

Maintenance Criteria for Basins

- Maintain basin floor and side slopes to promote dense turf with extensive root growth. This enhances infiltration, prevents erosion and consequent sedimentation of the basin floor, and prevents invasive weed growth. Immediately stabilize and revegetate bare spots.
- Do not allow vegetation growth to exceed 18 inches in height. Mow the slopes periodically and check for clogging, and erosion.
- Use the same seed mixtures as those recommended in Table 3.2.2. The use of slow-growing, stoloniferous grasses will permit long intervals between mowing. Mowing twice a year is generally satisfactory. Apply fertilizers only as necessary and in limited amounts to avoid contributing to ground water pollution. Consult the local agricultural or gardening resources such as Washington State University Extension for appropriate fertilizer type, including slow release fertilizers, and application rates.

3.3.11 Infiltration Trenches

This section covers design, construction, and maintenance criteria specific for infiltration trenches.

Description:

Infiltration trenches are generally at least 24 inches wide, and are backfilled with a coarse stone aggregate, allowing for temporary storage of stormwater runoff in the voids of the aggregate material. Stored runoff then gradually infiltrates into the surrounding soil. The surface of the trench can be covered with grating and/or consist of stone, gabion, sand, or a grassed covered area with a surface inlet. Perforated rigid pipe of at least 8-inch diameter can also be used to distribute the stormwater in a stone trench.

See Figure 3.3.4 for a schematic of an infiltration trench. See Figures 3.3.5, 3.3.6, 3.3.7, 3.3.8, 3.3.9 for examples of trench designs.

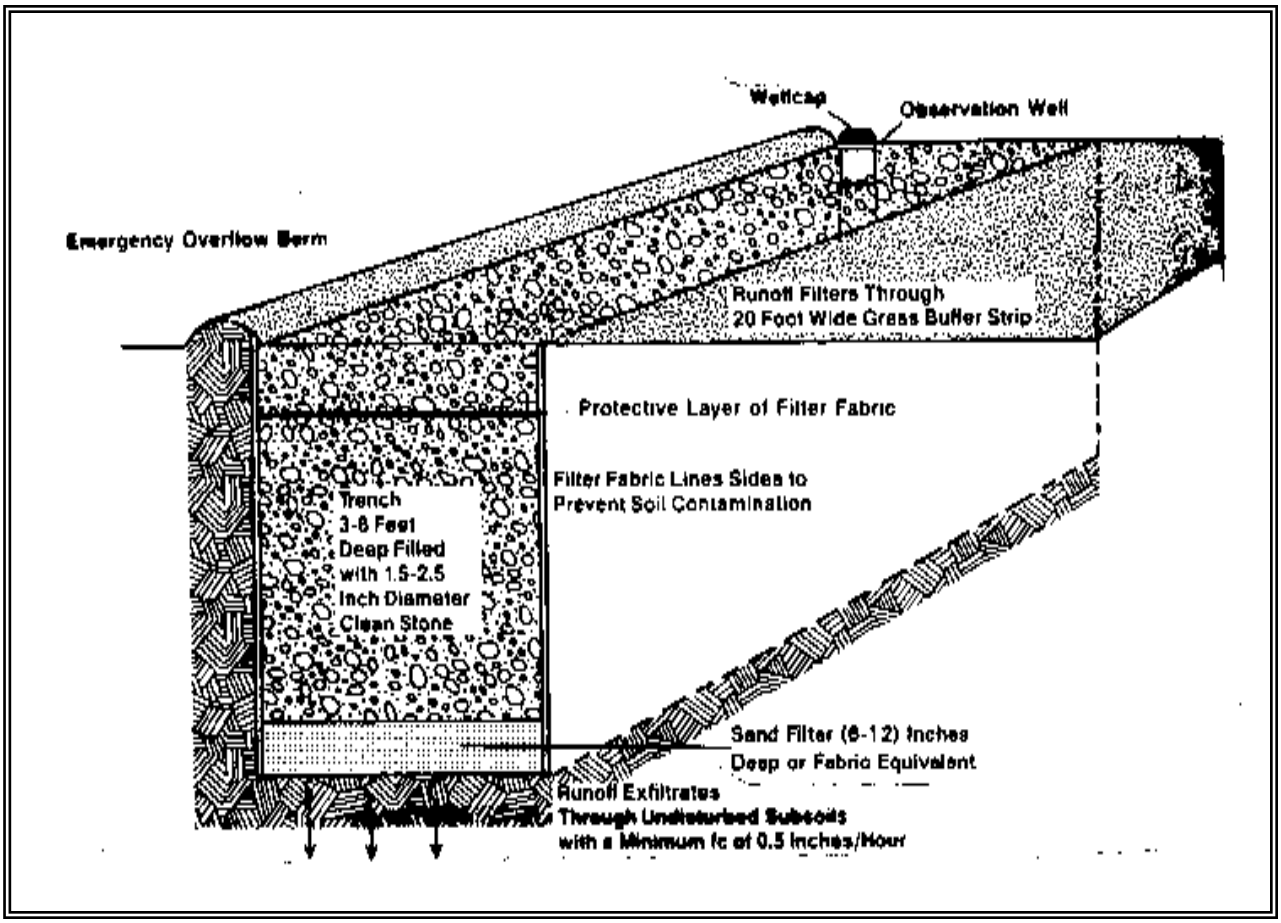

Figure 3.3.4 - Schematic of an Infiltration Trench

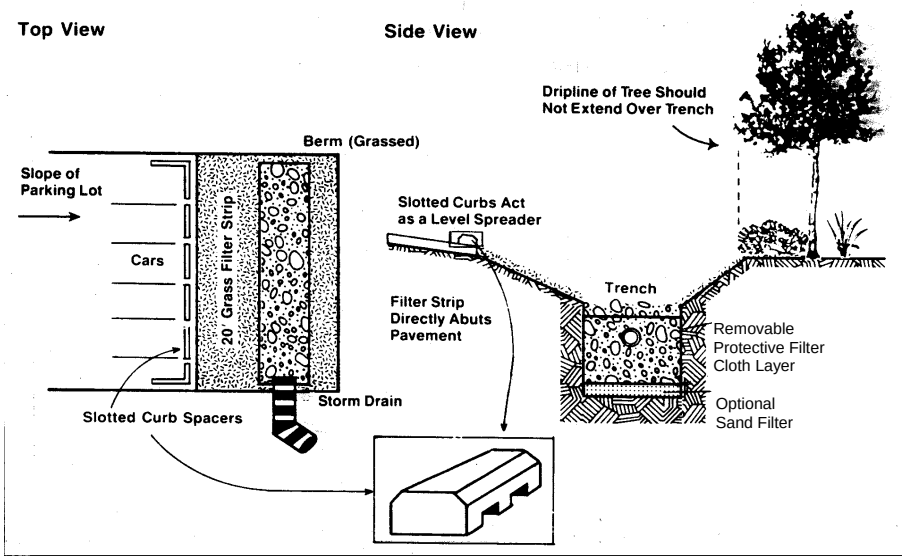

Figure 3.3.5 - Parking Lot Perimeter Trench Design

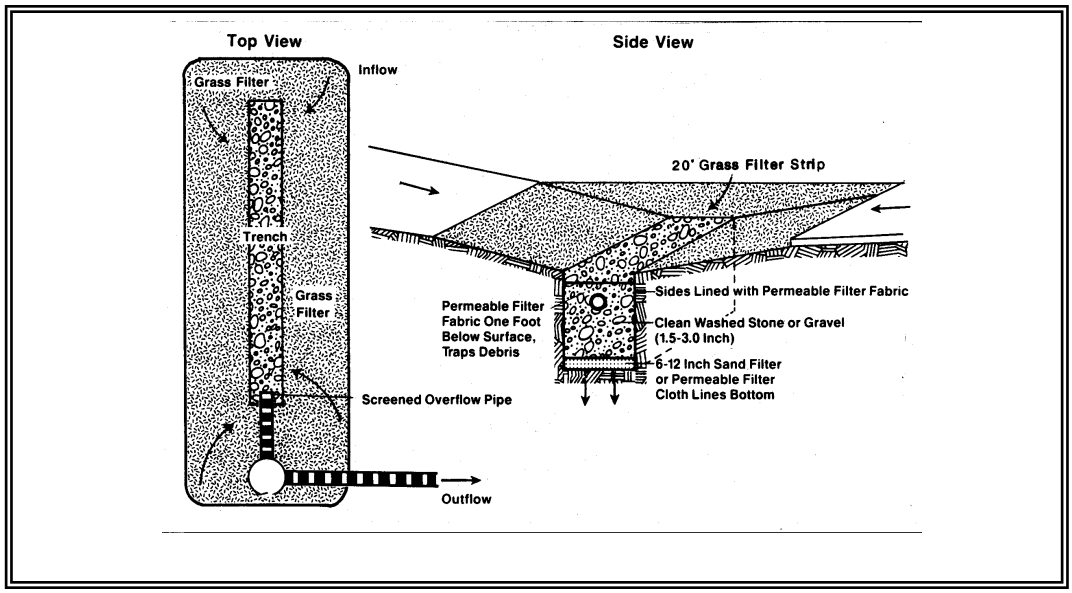

Source: Schueler (reproduced with permission)

Figure 3.3.6 - Median Strip Trench Design

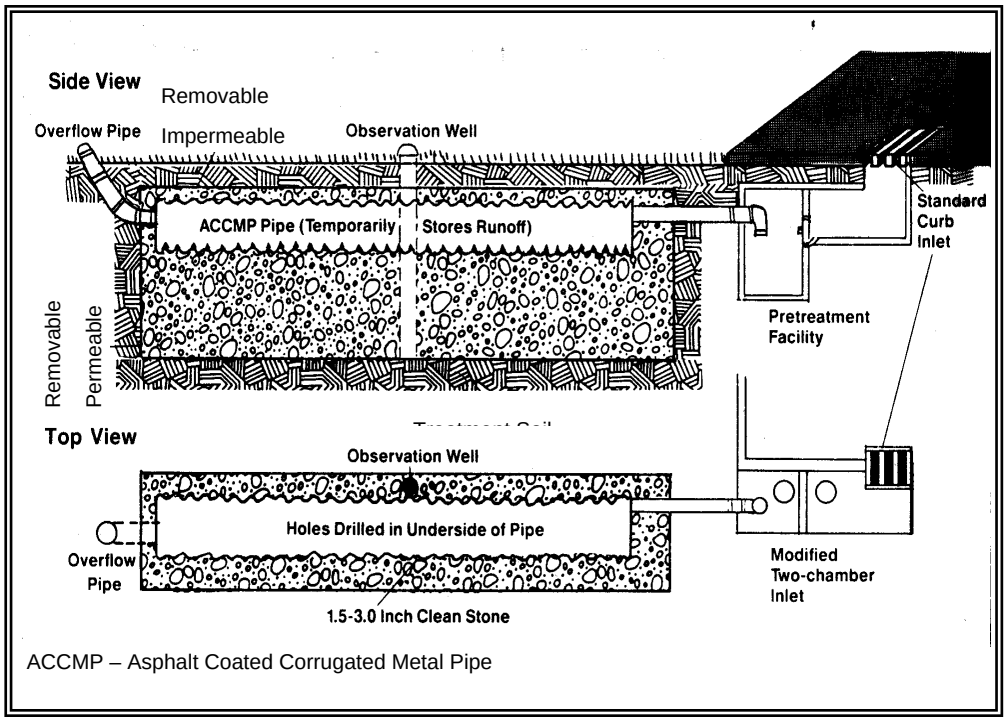

Source: Schueler (reproduced with permission)

Figure 3.3.7 - Oversized Pipe Trench Design

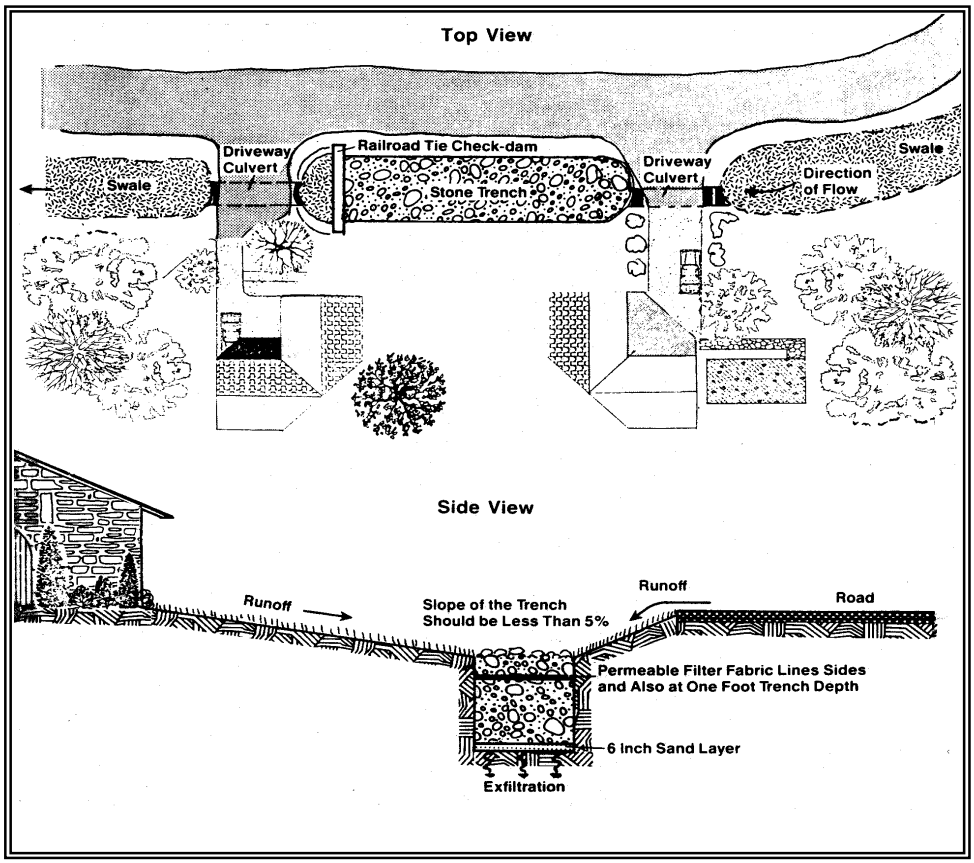

Source: Schueler (reproduced with permission)

Figure 3.3.8 - Swale/Trench Design

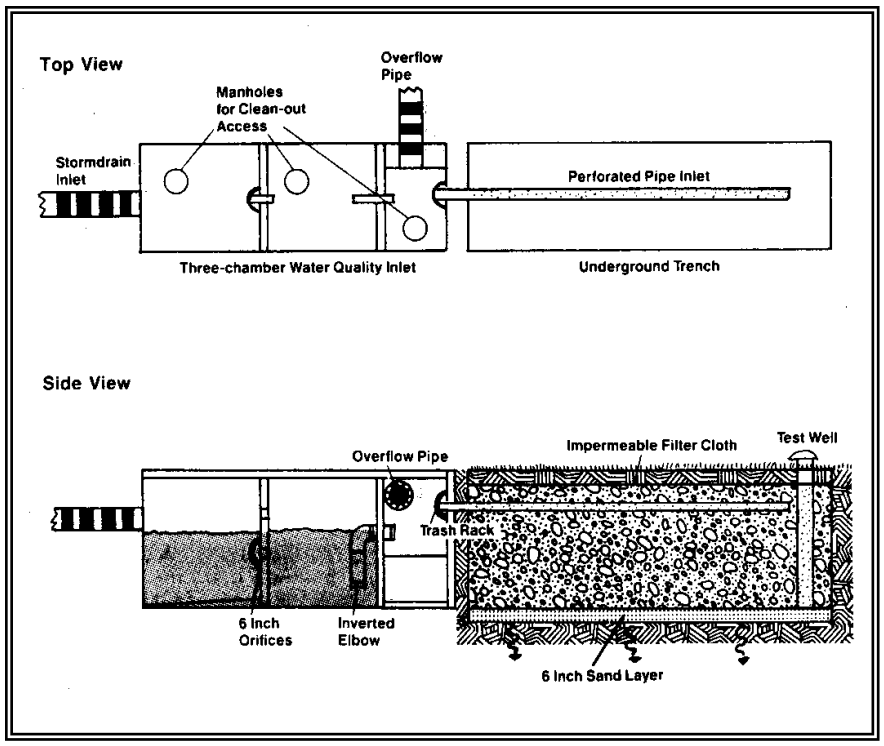

Source: Schueler (reproduced with permission)

Figure 3.3.9 - Underground Trench with Oil/Grit Chamber

Design Criteria

- Due to accessibility and maintenance limitations, carefully design and construct infiltration trenches. Contact the local jurisdiction for additional specifications.
- Consider including an access port or open or grated top for accessibility to conduct inspections and maintenance.
- Backfill Material - The aggregate material for the infiltration trench should consist of a clean aggregate with a maximum diameter of 3 inches and a minimum diameter of 1.5 inches. Void space for these aggregates should be in the range of 30 to 40 percent.
- Geotextile fabric liner – Completely encase the aggregate fill material in an engineering geotextile material. Geotextile should surround all of the aggregate fill material except for the top one-foot, which is placed over the geotextile. Carefully select geotextile fabric with acceptable properties to avoid plugging (see Appendix V-C of Volume V).
- The bottom sand or geotextile fabric as shown in Figure 3.3.10 is optional.

Refer to the Federal Highway Administration Manual "Geosynthetic Design and Construction Guidelines," Publication No. FHWA HI-95-038, May 1995 for design guidance on geotextiles in drainage applications. Refer to the NCHRP Report 367, "Long-Term Performance of Geosynthetics in Drainage Applications," 1994, for long-term performance data and background on the potential for geotextiles to clog, blind, or to allow piping to occur and how to design for these issues.

- Overflow Channel - Because an infiltration trench is generally used for small drainage areas, an emergency spillway is not necessary. However, provide a non-erosive overflow channel leading to a stabilized watercourse.
- Surface Cover - A stone filled trench can be placed under a porous or impervious surface cover to conserve space.
- Observation Well - Install an observation well at the lower end of the infiltration trench to check water levels, drawdown time, sediment accumulation, and conduct water quality monitoring. Figure 3.3.10 illustrates observation well details. It should consist of a perforated PVC pipe which is 4 to 6 inches in diameter and it should be constructed flush with the ground elevation. For larger trenches a 12-36 inch diameter well can be installed to facilitate maintenance operations such as pumping out the sediment. Cap the top of the well to discourage vandalism and tampering.

Construction Criteria

- Trench Preparation - Place excavated materials away from the trench sides to enhance trench wall stability. Take care to keep this material

away from slopes, neighboring property, sidewalks and streets. It is recommended that this material be covered with plastic. (See Volume II, BMP C123 – Plastic Covering).

- Stone Aggregate Placement and Compaction - Place stone aggregate in lifts and compact using plate compactors. In general, a maximum loose lift thickness of 12 inches is recommended. The compaction process ensures geotextile conformity to the excavation sides, thereby reducing potential piping and geotextile clogging, and settlement problems.
- Potential Contamination - Prevent natural or fill soils from intermixing with the stone aggregate. Remove all contaminated stone aggregate and replaced with uncontaminated stone aggregate.
- Overlapping and Covering-Following the stone aggregate placement, fold the geotextile over the stone aggregate to form a 12 inch minimum longitudinal overlap. When overlaps are required between rolls, the upstream roll should overlap a minimum of 2 feet over the downstream roll in order to provide a shingled effect.
- Voids behind Geotextile - Voids between the geotextile and excavation sides must be avoided. Removing boulders or other obstacles from the trench walls is one source of such voids. Place natural soils in these voids at the most convenient time during construction to ensure geotextile conformity to the excavation sides. This remedial process will avoid soil piping, geotextile clogging, and possible surface subsidence.
- Unstable Excavation Sites - Vertically excavated walls may be difficult to maintain in areas where the soil moisture is high or where soft or cohesionless soils predominate. Trapezoidal, rather than rectangular, cross-sections may be needed.

Maintenance Criteria

Monitor sediment buildup in the top foot of stone aggregate or the surface inlet on the same schedule as the observation well.

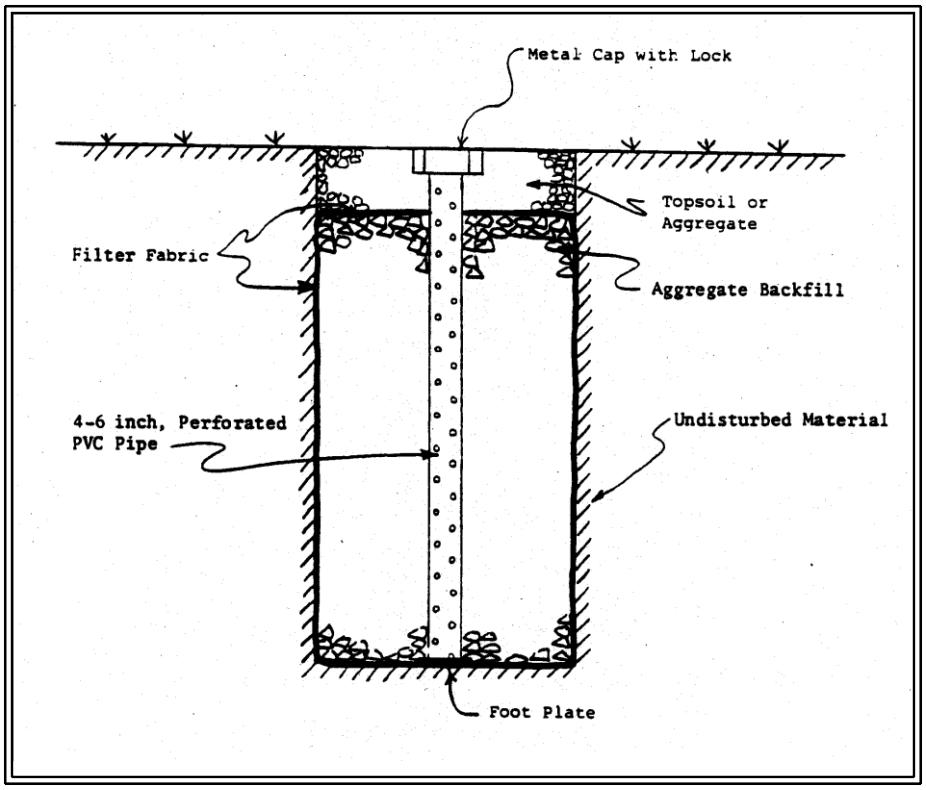

Figure 3.3.10 - Observation Well Details

3.4 Stormwater-related Site Procedures and Design Guidance for Bioretention and Permeable Pavement

3.4.1 Purpose

To locate and estimate the effectiveness of these distributed LID facilities in helping to meet the treatment, flow control, and LID requirements.

3.4.2 Description

The site procedures and design guidelines described in this Section are meant to be implemented after a preliminary project layout has been developed. The preliminary project layout should be developed considering the procedures of Chapter 3 in Volume 1~~ and Chapters 2 and 3 of the *LID Technical Guidance Manual For Puget Sound*~~. The designer must perform sufficient infiltration tests to confirm the feasibility of proposed bioretention and permeable pavement sites, and to provide a basis for estimating their contribution to meeting the treatment and flow reduction requirements. The same infiltration test sites may suffice for bioretention and permeable pavement as long as the soil receptor is the same. Testing should occur between December 1 and April 1.

The certified soils professional or engineer can exercise discretion concerning the need for and extent of infiltration rate (saturated hydraulic conductivity, K_{sat}) testing. The professional can consider a reduction in the extent of infiltration (K_{sat}) testing if, in their judgment, information exists confirming that the site is unconsolidated outwash material with high infiltration rates, and there is adequate separation from ~~-~~ground water:

- 1 foot separation from the bottom of a rain garden (per BMP T5.14A~~the Rain Garden Handbook for Western Washington Homeowners~~)
- 1 foot or 3 foot minimum separation from the bottom of a bioretention installation depending upon drainage area size (per BMP T7.30 Infeasibility Criteria) .
- 1 foot below the bottom of the base course for a permeable pavement(per BMP T5.15).

.

Bioretention and Rain Gardens:

Field Testing Requirements Based upon Project Size:

Projects subject to Minimum Requirements #1 - #5:

In accordance with Section 2.5.5 Minimum Requirement #5 in Volume 1, projects subject only to Minimum Requirements #1 - #5 have to evaluate the feasibility of rain gardens unless a higher priority LID BMP is feasible

or the applicant is meeting the LID performance standard through other BMPs. Perform a Small-Scale Pilot Infiltration Test (see Section 3.3.6) – or an alternative small scale test specified by the local government – to determine if the minimum measured infiltration rate of 0.3 in/hr is exceeded at the proposed rain garden location. Also determine whether the site has at least one foot minimum clearance to the seasonal high ground water or other hydraulic restriction layer.~~.~~

Please refer to BMP T5.14A in Chapter 5~~7~~ of Volume V for further design guidance for rain gardens.~~ infeasibility criteria for rain gardens. Refer to the "Rain Garden Handbook for Western Washington Homeowners" for design and construction guidance.~~

Projects subject to Minimum Requirements #1 - #9:

Also in accordance with Secion 2.5.5. Minimum Requirement #5 in Volume 1, projects subject to Minimum Requirements #1 - #9 have to evaluate the feasibility of bioretention facilities unless a higher priority LID BMP is feasible or the applicant is meeting the LID performance standard through other BMPs. Infeasibility criteria and design criteria for bioretention are found in Chapter 7 of Volume V.

On a single, smaller commercial property, one bioretention facility will likely be appropriate. In that case, a Small-Scale Pilot Infiltration Test (see Section 3.3.6) – or an alternative small scale test specified by the local government - should be performed at the proposed bioretention location. Tests at more than one site could reveal the advantages of one location over another.

On larger commercial sites, a small-scale test every 5,000 sq. ft. is advisable. If soil characteristics across the site are consistent, a geotechnical professional may recommend a reduction in the number of tests.

On multi-lot residential developments, multiple bioretention facilities, or a facility stretching over multiple properties are appropriate. In most cases, it is necessary to perform small-scale Pilot Infiltration Tests (PIT), or other small-scale tests as allowed by the local jurisdiction. A test is advisable at each potential bioretention site. Long, narrow bioretention facilities, such as one following the road right-of-way, should have a test location at least every 200 lineal feet, and within each length of road with significant differences in subsurface characteristics.

However, if the site subsurface characterization, including soil borings across the development site, indicate consistent soil characteristics and depths to seasonal high ground water conditions or a hydraulic restriction layer, the number of test locations may be reduced to a frequency recommended by a geotechnical professional.

After concluding an infiltration test, Infiltration sites should be over-excavated 3 feet below the projected infiltration facility's bottom elevation

unless minimum clearances to seasonal high ground water have or will be determined by another method. This overexcavation is to determine if there are restrictive layers or ground water. Observations through a wet season can identify a seasonal ground water restriction.

If a single bioretention facility serves a drainage area exceeding 1 acre, a ground water mounding analysis may be necessary in accordance with Section 3.3.8.

Assignment of Appropriate Correction Factors to the Sub-grade Soil: *(Applicable to projects subject to Minimujm Requirements #1 - #9; and to projects that must or choose to demonstrate compliance with the LID Performance Standard of Minimum Requirement #5).*

If deemed necessary by a qualified professional engineer, a correction factor may be applied to the measured K_{sat} of the subgrade soils to estimate its design (long term) infiltration rate. (*Note:* This is separate design issue from the assignment of a correction factor to the overlying, designed bioretention soil mix. See Chapter 7 of Volume V for that design issue).

The overlying bioretention soil mix provides excellent protection for the underlying native soil from sedimentation. Accordingly, the correction factor for the sub-grade soil does not have to take into consideration the extent of influent control and clogging over time. The correction factor to be applied to in-situ, small-scale infiltration test results is determined by the number of tests in relation to the number of bioretention areas and site variability. See Table 3.4.1. Correction factors range from 0.33 to 1 (no correction) and are determined by a licensed geotechnical engineer or licensed engineering geologist.

Tests should be located and be at an adequate frequency capable of producing a soil profile characterization that fully represents the infiltration capability where the bioretention areas are to be located. The correction factor depends on the level of uncertainty that variable subsurface conditions justify. If a pilot infiltration test is conducted for all bioretention areas or the range of uncertainty is low (for example, conditions are known to be uniform through previous exploration and site geological factors) one pilot infiltration test may be adequate to justify a correction factor of one. If the level of uncertainty is high, a correction factor near the low end of the range may be appropriate. Two example scenarios where low correction factors may apply include:

- Site conditions are highly variable due to a deposit of ancient landslide debris, or buried stream channels. In these cases, even with many explorations and several pilot infiltration tests, the level of uncertainty may still be high.
- Conditions are variabile, but few explorations and only one pilot infiltration test is conducted. That is, the number of explorations and tests conducted do not match the degree of site variability anticipated.

Table 3.4.1
Correction factors for in-situ Saturated Hydraulic Conductivity measurements to estimate design (long-term) infiltration rates of subgrade soils underlying Bioretention

Site Analysis Issue	Correction Factor
Site variability and number of locations tested	CF_V = 0.33 to 1
Degree of influent control to prevent siltation and bio-buildup	No correction factor required

Project Submission Requirements:

Submit the results of infiltration (K_{sat}) testing and ground water elevation testing (or other documentation and justification for the rates and hydraulic restriction layer clearances) with the Stormwater Site Plan as justification for the feasibility decision regarding bioretention and as justification for assumptions made in the runoff modeling.

Modeling:

For projects that have to demonstrate compliance with Minimum Requirements #6 and/or #7, it is preferable to enter each bioretention device and its drainage area into the approved computer models for estimating their performance.

However, where site layouts involve multiple bioretention facilities, the modeling schematic can become extremely complicated or not accommodated by the available schematic grid.

In those cases, multiple bioretention facilities with similar designs (i.e., soil depth, ponding depth, freeboard height, and drainage area to ponding area ratio), and infiltration rates (Ecology suggests within a factor of 2) may have their drainage areas and ponded areas be combined, and represented in the runoff model as one drainage area and one bioretention device. In this case, use a weighted average of the design infiltration rates at each location. The averages are weighted by the size of their drainage areas.

Each design infiltration rate is the measured infiltration rate (K_{sat}) multiplied by the appropriate correction (reduction) factors. For these native soils below bioretention soils, a site variability correction factor, $CF_{v,}$ should be considered.

Additional guidance concerning LID modeling will be available during training sessions on WWHM 2012.

Legal Documentation to Track Rain Garden and Bioretention Obligations:

Where drainage plan submittals include assumptions with regard to size and location of rain garden or bioretention facilities, approval of the plat, short-plat, or building permit should identify the rain garden or bioretention obligation of each lot; and the appropriate lots should have deed requirements for construction and maintenance of those facilities.

Permeable Pavement:

Field Testing Requirements based upon Project Size:

Projects subject to Minimum Requirements #1 - #5:

In accordance with Section 2.5.5 Minimum Requirement #5 in Volume 1, projects subject only to Minimum Requirements #1 - #5 have to evaluate the feasibility of permeable pavement for a development site unless a higher priority BMP is feasible or the applicant is choosing to meet the LID performance standard using other BMPs. A small-scale Pilot Infiltration Tests (PIT) – or other small-scale tests as allowed by the local jurisdiction - should be performed for every 5,000 sq. ft. of permeable pavement, but not less than 1 test per site. Procedures to test for high ground water and infiltration rate (aka, saturated hydraulic conductivity, K_{sat}) are referenced in Chapter 3 of Volume I. Detailed procedures for the Small-Scale Pilot Infiltration Test are in Section 3.3.6 of this volume. **Submit results as part of the stormwater site plan to establish a basis for a feasibility decision.**

Projects subject to Minimum Requirements #1 - #9:

Projects subject to Minimum Requirements #1 - #9 will likely have to evaluate a site for permeable pavement feasibility. On commercial property that cannot use full dispersion, permeable pavement should be the first choice for parking lots and walkways, unless infeasible or the applicant demonstrates compliance with the LID performance standard through other BMPs. A small-scale Pilot Infiltration Tests (PIT) - or other small-scale tests as allowed by the local jurisdiction - should be performed for every 5,000 sq. ft. of permeable pavement, but not less than 1 test per site.

On residential developments not using full dispersion (BMP T5.30), permeable pavements should be the first choice for residential access roads and walks, and for private walks and driveways on residential lots unless infeasible or the applicant demonstrates compliance with the LID performance standard through other BMPs. Small-scale infiltration tests should be performed at every proposed lot, at least every 200 feet of roadway and within each length of road with significant differences in subsurface characteristics. However, if the site subsurface characterization - including soil borings across the development site - indicate consistent soil characteristics and depths to seasonal high ground water conditions, the number of test locations may be reduced to a frequency recommended by a geotechnical professional.

Unless seasonal high ground water elevations across the site have already been determined, upon conclusion of the infiltration testing, infiltration sites should be over-excavated 1 foot to see any restrictive layers or ground water. Observations through a wet season can identify a seasonal ground water restriction.

Perform infiltration testing in the soil profile at the estimated bottom elevation of base materials for the permeable pavement. If no base materials, (e.g., a pervious concrete sidewalk), perform the testing at the estimated bottom elevation of the pavement.

Assignment of Appropriate Correction Factors:

(Applicable to projects subject to Minimum Requirements #1 - #9; and to projects that must or choose to demonstrate compliance with the LID Performance Standard of Minimum Requirement #5).

The correction factor for in-situ, small-scale pilot infiltration test is determined by the number of tests in relation to the size of the permeable pavement installation, site variability and the quality of the aggregate base material. Correction factors range from 0.33 to 1 (no correction).

Tests should be located and be at adequate frequency capable of producing a soil profile characterization that fully represents the infiltration capability where the permeable pavement is located. If used, the correction factor depends on the level of uncertainty that variable subsurface conditions justify. If enough pilot infiltration tests are conducted across the permeable pavement subgrade to provide an accurate characterization, or the range of uncertainty is low (for example, conditions are known to be uniform through previous exploration and site geological factors), then a correction factor of one for site variability may be justified. Additionally, a correction factor of 1 for the quality of pavement aggregate base material may be necessary if the aggregate base is clean washed material with 1% or less fines passing the 200 sieve. See Table 3.4.2 - Correction factors for in-situ Saturated Hydraulic Conductivity (K_{sat}) Measurements - to estimate design (long-term) infiltration rates.

If the level of uncertainty is high, a correction factor near the low end of the range may be appropriate. Two example scenarios where low correction factors may apply include:

- Site conditions are highly variable due to a deposit of ancient landslide debris, or buried stream channels. In these cases, even with many explorations and several pilot infiltration tests, the level of uncertainty may still be high.
- Conditions are variable, but few explorations and only one pilot infiltration test is conducted. That is, the number of explorations and tests conducted do not match the degree of site variability anticipated.

Table 3.4.2
Correction factors for in-situ Saturated Hydraulic Conductivity (Ksat) measurements to estimate design (long-term) infiltration rates

Site Analysis Issue	Correction Factor
Site variability and number of locations tested	CF_v = 0.33 to 1
Quality of pavement aggregate base material	CF_m = 0.9 to 1

Total correction factor (CF_T) = CF_v x CF_m

Soil Suitability Criteria Confirmation:

Where permeable pavements are used for pollution-generating hard surfaces (primarily roads, driveways, and parking lots), there must be a determination whether the soil suitability criteria of Section 3.3.7 are met. The applicable criteria are:

- Cation Exchange Capacity > 5%
- Organic Content > 1%
- Measured (initial) saturated hydraulic conductivity < 12 in./hr.
- One foot depth of soil with above characteristics

Sites not meeting these criteria should be considered infeasible for permeable pavements for pollution-generating hard surfaces.

The information to make this determination may be obtained from various sources: historic site information, estimated qualities of a general soil type, laboratory analysis of field samples. Local jurisdictions may identify regional areas as infeasible for permeable pavements for pollution-generating hard surfaces based upon knowledge of the region's soil characteristics in regard to the criteria listed above.

Project Submission Requirements:

Submit results of infiltration (K_{sat}) testing, ground water elevation testing (or other documentation and justification for the rates and hydraulic restriction layer clearances) with the Stormwater Site Plan as justification for the feasibility decision regarding permeable pavement, and as justification for assumptions made in the runoff modeling. If necessary, also submit documentation of meeting the soil suitability criteria.

Modeling:

In the runoff modeling, similar designs throughout a development can be summed and represented as one large facility. For instance, walkways can be summed into one facility. Driveways with similar designs (and enforced through deed restrictions) can be summed into one facility. In these instances, a weighted average of the design infiltration rates (where within a factor of two) for each location may be used. The averages are

weighted by the size of their drainage area. The design infiltration rate for each site is the measured K_{sat} multiplied by the appropriate correction factors.

As an alternative, simply enter walks, patios, and driveways with little storage capacity in the gravel bedding beneath them as lawn/landscape areas in the continuous runoff model. Roads and parking lots that have storage in a base course below the wearing surface should use the permeable pavement element in the continuous runoff model.

Legal Documentation to Track Permeable Pavement Obligations:

Where drainage plan submittals include assumptions in regard to size and location of permeable pavement, approval of the plat or short-plat should identify the permeable pavement obligation of each lot; and the appropriate lots should have deed requirements for construction and maintenance of those facilities.

Volume III References

Buckman, Harry O., and Nyle C. Brady, The Nature and Properties of Soils, Collier Macmillan Ltd., Toronto, Ontario, 1969.

Chin, D.A., Water Resources Engineering, Prentice Hall, New Jersey, 2000.

Chow, V.T., Handbook of Applied Hydrology, McGraw Hill Book Co., New York, 1964.

Department of Ecology, Stormwater Management Manual for the Puget Sound Basin, February, 1992.

Dini~~a~~cola, R.S., Characterization and Simulation of Rainfall-Runoff Relations for Headwater Basins in Western King and Snohomish Counties, Washington, USGS Water Resources Investigations Report 89-4052, 1989.

Ferguson, Bruce K., Stormwater Infiltration, Lewis Publishers, 1994.

Horner, Richard Fundamentals of Urban Runoff Management-Technical and Institutional Issues, 1994.

Huber, Wayne, and Robert Dickinson, Stormwater Management Model Version 4 Part A: User's Manual, Environmental Research Laboratory, Athens, GA, 1988.

King County Runoff Time Series (KCRTS), King County Department of Natural Resources, Personal Communication, 1999.

Massman, Joel, A Design Manual for Sizing Infiltration Ponds, October 2003.

Massmann, Joel & Carolyn Butchart, U. of Washington Infiltration Characteristics, Performance, and Design of Storm Water Facilities, March 2000.

NOAA Atlas 2, Precipitation Frequency Atlas of the Western United States, Volume IX-Washington.

Rawls, W. J., Brakensiek, D. L. and Saxton, K. E. Estimation of Soil Properties. Transactions of the American Society of Agricultural Engineers, Vol. 25, No. 5, pp. 1316-1320, 1982.

Stubdaer, J.M., The Santa Barbara Urban Hydrograph Method, National Symposium on Urban Hydrology and Sediment Control, University of Kentucky, Lexington, KY, 1975.

USDA-SCS, Technical Release No. 20 (TR-20) Model Project Formulation, 1982.

USDA-SCS, Technical Release No. 55: Urban Hydrology for Small Watersheds, 1986.

USEPA, Hydrological Simulation Program - Fortran HSPF Users Manual for Release 9., EPA 600/3-84-066, Environmental Research Laboratory, Athens, GA, June 1984.

Wiltsie, Edward, Stormwater Facilities Performance Study, Infiltration Pond Testing and Data Evaluation, August 10, 1998.

This page purposely left blank

Resource Materials (not specifically referenced in text)

Barfield, B. J., and Warner, R. C., and Haan, C. T. Applied Hydrology and Sedimentology for Disturbed Areas. Oklahoma Technical Press, Stillwater, Oklahoma, 1983.

Bentall, R., Methods of Collecting and Interpreting Ground Water Data, U.S. G. S. Water Supply Paper 1544-H., 1963, 97 p.

Bianchi, W.C. and D.C. Muckel, Ground Water Recharge Hydrology, ARS 41-161, USDA, 1970. 62 p.

Bouwer, Herman., Groundwater Hydrology, McGraw-Hill Book Company, Inc., N.Y., 1978.

Camp Dresser & McKee, Larry Walker Associates, Uribe and Associates, and Resource Planning Associates. California Storm Water Best Management Practice Handbooks. March 1993

Caraco, D., Claytor, R., Stormwater BMP Design Supplement for Cold Climates USEPA, December 1997

Davis, S.N. and R.J. DeWiest, Hydrogeology. John Wiley and Sons, N.Y., 1966.

Ferguson, Bruce K., Stormwater Infiltration, Lewis Publishers, 1994.

Ferris, J.G., D.B. Knowles, R.H. Brown, and R.W. Stallman, Theory of Aquifer Tests, USGS, Water Supply Paper No. 1536-E.

Gaus, Jennifer J., Soils of Stormwater Infiltration Basins in the Puget Sound Region: Trace Metal Form and Concentration and Comparison to Washington State Department of Ecology Guidelines, Master of Science, U. of Washington, 1993.

Hannon, J. B., Underground Disposal of Storm Water Runoff, Design Guidelines Manual, California Department of Transportation, U.S. Department of Transportation, Washington, DC (FHWA-TS-80-218), February 1980.

Harrington, Bruce W., Design and Construction of Infiltration Trenches, Seminar-Urban Watershed Management, How to Design Urban Stormwater Best Management Practices, ASCE, July, 1994.

Hilding, Karen, A Survey of Infiltration Basins in the Puget Sound Regions, Masters Project, U. of California, 1993.

Jacobson, Michael A., Summary and Conclusions from Applied Research on Infiltration Basins and Recommendations for Modifying the Washington Department of Ecology Stormwater Management Manual for the Puget Sound Basin. University of Washington, Center for Urban Water Resources Management. May 1993.

King County, Washington, Surface Water Design Manual, September 1, 1998.

Klochak, John R., An Investigation of the Effectiveness of Infiltration Systems in Treating Urban Runoff, Master of Science, U. of Washington, 1992.

Konrad, C. P., Jensen, B. W., Burges, S. J, Reinelt, L. E. On-Site Residential Stormwater Management Alternatives. Center for Urban Water Resources, University of Washington. September 1995.

Livingston, E. H., Infiltration Practices: The Good, the Bad, and the Ugly, National Conference on Urban Runoff Management, Chicago, Ill. 1993.

Moore, John, Seepage: A System for Early Evaluation of the Pollution Potential of Agriculture Groundwater Environments, SCS, 1988.

Pettyjohn, W.A., Introduction to Artificial Ground Water Recharge, USEPA, Ada, Oklahoma, National Waterwell Association, Worthington, Ohio, 1981, 44 p.

Rawls, W. J., D. L. Brakensiek, and K. E. Saxton, Estimation of Soil Properties. Transactions of the American Society of Agricultural Engineers, Vol. 25, No. 5, pp. 1316-1320, 1982.

Schueler, Thomas, et. al., A Current Assessment of Urban Best Management Practices, March, 1992

Soil Conservation Service, SCS National Engineering Handbook Section 8, Engineering Geology , USDA., 1978.

Soil Conservation Service, USDA, SCS National Engineering Handbook, Section 18 Ground Water, 1968.

Soil Conservation Service, USDA, SCS Technical Release No. 36, Ground Water Recharge, Engineering Division, 1967, 22 p.

Todd, D.K., Ground Water Hydrology, John Wiley and Sons, Inc., N.Y., 1959.

Urbonas and Stahre, “Stormwater Best Management Practices”, Prentiss-Hall, 1993

WEF Manual of Practice #23 Urban Runoff Quality Management, Water Environment Federation & ASCE 1998.

Wenzel, L.K., Methods of Determining Permeability of Water Bearing Materials, USGS Water Supply Paper 887, 1942.

Wiltsie, Edward, Stormwater Facilities Performance Study, Infiltration Pond Testing and Data Evaluation, August 10, 1998

Woodward-Clyde, BMP Design Recommendations, November 1995

Appendix III-A Isopluvial Maps for Design Storms

Included in this appendix are the 2, 10 and 100-year, 24-hour design storm and mean annual precipitation isopluvial maps for Western Washington. These have been taken from NOAA Atlas 2 "Precipitation - Frequency Atlas of the Western United States, Volume IX, Washington and are available on link at the following web address:

http://www.nws.noaa.gov/oh/hdsc/PF_documents/Atlas2_Volume9.pdf

This page purposely left blank

Western Washington Isopluvial 2-year, 24 hour

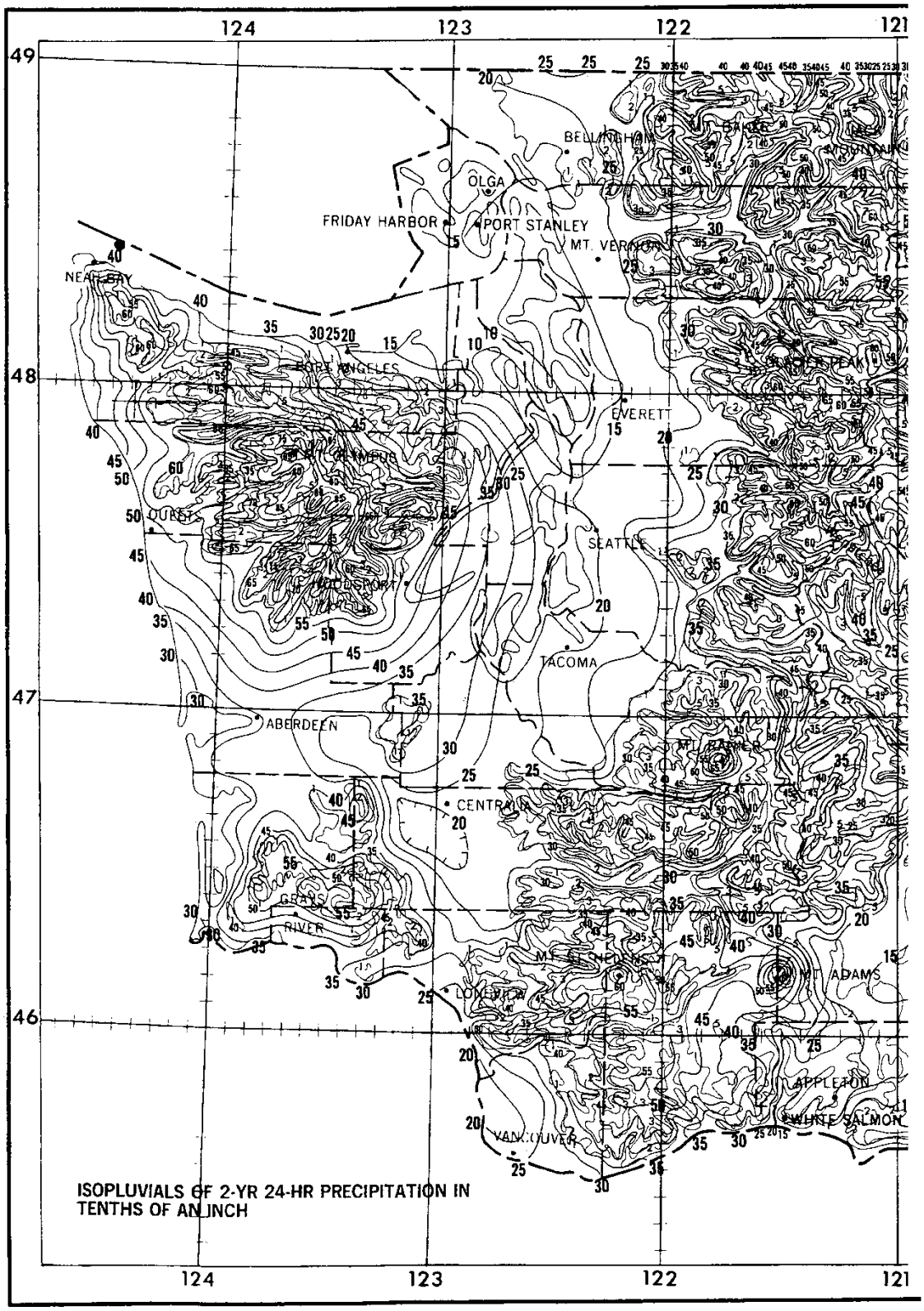

Western Washington Isopluvial 10-year, 24 hour

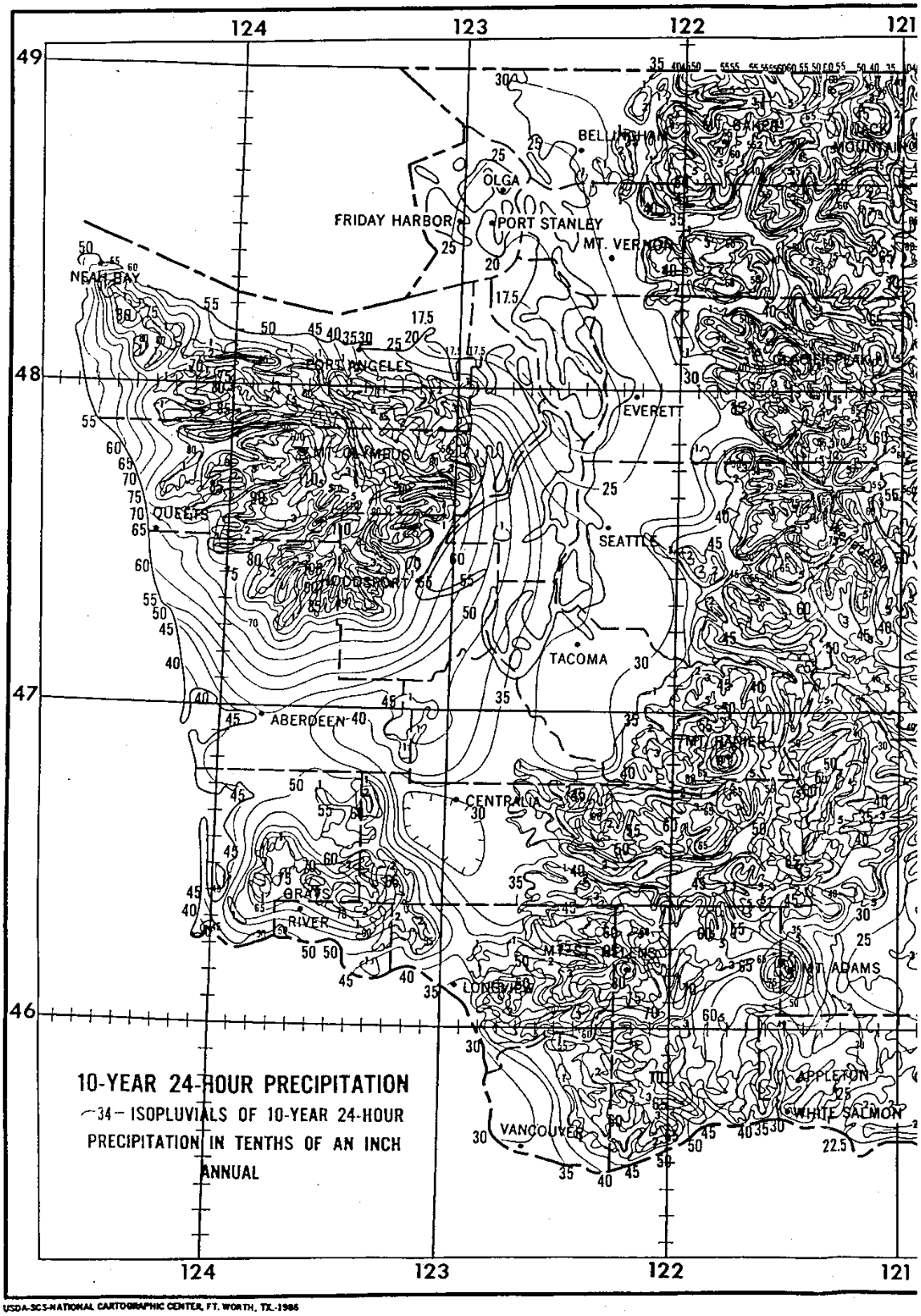

USDA-SCS-NATIONAL CARTOGRAPHIC CENTER, FT. WORTH, TX.-1986

Western Washington Isopluvial 100-year, 24 hour

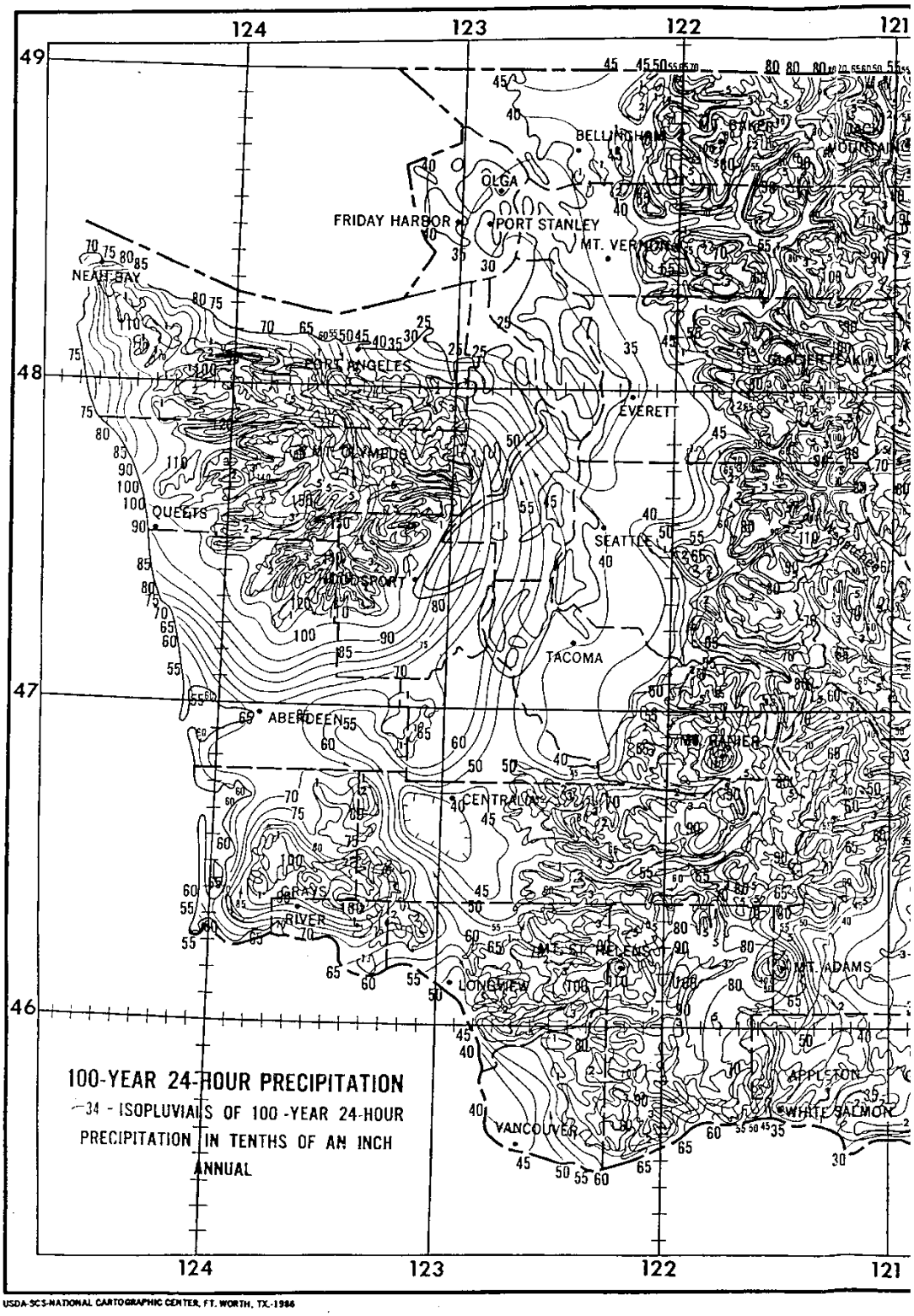

USDA-SCS-NATIONAL CARTOGRAPHIC CENTER, FT. WORTH, TX.-1986

This page purposely left blank

Appendix III-B Western Washington Hydrology Model – Information, Assumptions, and Computation Steps

This appendix describes some of the information and assumptions used in the Western Washington Hydrology Model (WWHM). However, since the first version of WWHM was developed and released to public in 2001, WWHM program has gone through several upgrades incorporating new features and capabilities. It is anticipated that the next upgrade to WWHM will add low impact development (LID) modeling capability. WWHM users should periodically check Ecology's WWHM web site for the latest releases of WWHM, user manual, and any supplemental instructions. The web address for WWHM is: http://www.ecy.wa.gov/programs/wq/stormwater/wwhmtraining/index.htmlWWHM Limitations

WWHM has been created for the specific purpose of sizing stormwater control facilities for new development and redevelopment projects in Western Washington. WWHM can be used for a range of conditions and developments; however, certain limitations are inherent in this software. These limitations are described below.

The WWHM uses the EPA HSPF software program to do all of the rainfall-runoff and routing computations. Therefore, HSPF limitations are included in the WWHM. For example, HSPF does not explicitly model backwater or tailwater control situations. This is also true in the WWHM.

WWHM Information and Assumptions

1. Precipitation data.

Length of record.

The WWHM uses long-term (50 - 70 years) precipitation data to simulate the potential impacts of land use development in western Washington. A minimum period of 20 years is sufficient to simulate enough peak flow events to produce accurate flow frequency results. A 40 to 50-year record is preferred. The actual length of record of each precipitation station varies, but all exceed 50 years.

Rainfall distribution.

The precipitation data are representative of the different rainfall regimes found in western Washington. More than 17 precipitation stations are used. These stations represent rainfall at elevations below 1500 feet. WWHM does not include snowfall and melt.

The primary source for precipitation data is National Weather Service stations. The secondary source is precipitation data collected by local jurisdictions. During development of WWHM, county engineers at 19 western Washington counties were contacted to obtain local precipitation data.

Earlier versions of WWHM used hourly data from the ~~The following~~ precipitation stations in the table below to generate precipitation timeseries for use in WWHM. ~~have been included in the WWHM:~~ For WWHM2012, more recent precipitation data have been used to generate precipitation timeseries in15-min time step.

Precipitation Station	Years of Data	County Coverage
Astoria, OR	1955-1998 = 43	Wahkiakum
Blaine	1948-1998 = 50	Whatcom, San Juan
Burlington	1948-1998 = 50	Skagit, Island
Clearwater	1948-1998 = 50	Jefferson (west)
Darrington	1948-1996 = 48	Snohomish (northeast)
Everett	1948-1996 = 48	Snohomish (excluding northeast)
Frances	1948-1998 = 50	Pacific
Landsburg	1948-1997 = 49	King (east)
Longview	1955-1998 = 43	Cowlitz, Lewis (south)
McMillian	1948-1998 = 50	Pierce
Montesano	1955-1998 = 43	Grays Harbor
Olympia	1955-1998 = 43	Thurston, Mason (south), Lewis (north)
Port Angeles	1948-1998 = 50	Clallam (east)
Portland, OR	1948-1998 = 50	Clark, Skamania
Quilcene	1948-1998 = 50	Jefferson (east), Mason (north), Kitsap
Sappho	1948-1998 = 50	Clallam (west)
SeaTac	1948-1997 = 49	King (west)

The records were reviewed for length, quality, and completeness of record. Annual totals were checked along with hourly maximum totals. Using these checks, data gaps and errors were corrected, where possible. A "Quality of Record" summary was produced for each precipitation record reviewed.

The reviewed and corrected data were placed in multiple WDM (Watershed Data Management) files. One WDM file was created per county and contains all of the precipitation data to be used by the WWHM for that particular county. A local government that believes that it has a more

accurate precipitation record to use with the WWHM should petition Ecology to allow use of that record, and to possibly incorporate that record into the WWHM. This may be more easily done in the future if the WWHM is upgraded to allow use of custom precipitation time series.

Computational time step.

The computational time step used in the earlier versions of WWHM has been one hour. The one-hour time step was selected to better represent the temporal variability of actual precipitation than daily data. ~~Future upgrades~~~~The latest version of WWHM (~~WWHM2012~~)~~ ~~(2012) to WWHM will~~ incorporates 15-minute precipitation time series.

~~Based on more frequent (15-minute) rain data collected over 25 years in Seattle, a relationship has been developed and incorporated in WWHM for converting the 60-minute water quality design flows to 15-minute flows. The 15-minute water quality design flows are more appropriate and must be used for design of water quality treatment facilities that are expected to have a hydraulic residence time of less than one hour. Future upgrades to WWHM will likely use 15-minute precipitation times eries and as such the conversion of 60-minute water quality design flows to 15-minute flows would not be necessary~~.

2. Precipitation multiplication factors.

Precipitation multiplication factors increase or decrease recorded precipitation data to better represent local rainfall conditions. This is particularly important when the precipitation gage is located some distance from the study area.

Precipitation multiplication factors were developed for western Washington. The factors are based on the ratio of the 24-hour, 25-year rainfall intensities for the representative precipitation gage and the surrounding area represented by that gage's record. The 24-hour, 25-year rainfall intensities were determined from the NOAA Atlas 2 (*Precipitation-Frequency Atlas of the Western United States, Volume IX – Washington, 1973*).

These multiplication factors were created for the Puget Sound lowlands plus all western Washington valleys and hillside slopes below 1500 feet elevation. The factors were placed in the WWHM database and linked to each county's map. They are transparent to the general user and the default range is set to 0.8 – 2. The advanced user will have the ability to change the precipitation multiplication factor for a specific site. However, such changes will be recorded in the WWHM output.

3. Pan evaporation data.

Pan evaporation data are used to determine the potential evapotranspiration (PET) of a study area. Actual evapotranspiration (AET) is computed by the WWHM based on PET and available moisture supply. AET accounts for the precipitation that returns to the atmosphere without becoming runoff. Soil moisture conditions and runoff are directly influenced by PET and AET.

Evaporation is not highly variable like rainfall. Puyallup pan evaporation data are used for all of the 19 western Washington counties.

Pan evaporation data were assembled and checked for the same time period as the precipitation data and placed in the appropriate county WDM files.

Pan evaporation data are collected in the field, but PET is used by the WWHM. PET is equal to pan evaporation times a pan evaporation coefficient. Depending on climate, pan evaporation coefficients for western Washington range from 0.72 to 0.82.

NOAA Technical Report NWS 33, *Evaporation Atlas for the Contiguous 48 United States*, was used as the source for the pan evaporation coefficients. Pan evaporation coefficient values are shown on Map 4 of that publication.

As with the precipitation multiplication factors, the pan evaporation coefficients have been placed in the WWHM database and linked to each county's map. They will be transparent to the general user. The advanced user will have the ability to change the coefficient for a specific site. However, such changes will be recorded in the WWHM output.

4. Soil data.

Soil type, along with vegetation type, greatly influences the rate and timing of the transformation of rainfall to runoff. Sandy soils with high infiltration rates produce little or no surface runoff; almost all runoff is from ground water. Soils with a compressed till layer slowly infiltrate water and produce larger amounts of surface runoff during storm events.

WWHM uses three predominant soil type to represent the soils of western Washington: till, outwash, and saturated

Till soils have been compacted by glacial action. Under a layer of newly formed soil lies a compressed soil layer commonly called "hardpan". This hardpan has very poor infiltration capacity. As a result, till soils produce a relatively large amount of surface runoff and interflow. A typical example of a till soil is an Alderwood soil (SCS class C). Where field infiltration tests indicate a measured (initial) infiltration rate less than 0.30 in/hr, the user may model the site as a class C soil.

Outwash soils have a high infiltration capacity due to their sand and gravel composition. Outwash soils have little or no surface runoff or interflow. Instead, almost all of their runoff is in the form of ground water. An Everett soil (SCS class A) is a typical outwash soil.

Outwash soils over high ground water or an impervious soil layer have low infiltration rates and act like till soils. Where ground water or an impervious soil layer is within 5 feet from the surface, outwash soils may be modeled as till soils in the WWHM.

Saturated soils are usually found in wetlands. They have a low infiltration rate and a high ground water table. When dry, saturated soils have a high storage capacity and produce very little runoff. However, once they become saturated they produce surface runoff, interflow, and ground water in large quantities. Mukilteo muck (SCS class D) is a typical saturated/-wetland soil.

The user will be required to investigate actual local soil conditions for the specific development planned. The user will then input the number of acres of outwash (A/B), till (C/D), and saturated/wetland ~~(D)~~ soils for the site conditions.

Alluvial soils are found in valley bottoms. These are generally fine-grained and often have a high seasonal water table. There has been relatively little experience in calibrating the HSPF model to runoff from these soils, so in the absence of better information, these soils may be modeled as till soils.

Additional soils will be included in the WWHM if appropriate HSPF parameter values are found to represent other major soil groups.

The three predominant soil types are represented in the WWHM by specific HSPF parameter values that represent the hydrologic characteristics of these soils. More information on these parameter values is presented below.

5. Vegetation data.

As with soil type, vegetation types greatly influence the rate and timing of the transformation of rainfall to runoff. Vegetation intercepts precipitation, increases its ability to percolate through the soil, and evaporates and transpires large volumes of water that would otherwise become runoff.

WWHM represents the vegetation of western Washington with three predominant vegetation categories: forest, pasture, and lawn (also known as grass).

Forest vegetation represents the typical second growth Douglas fir found in the Puget Sound lowlands. Forest has a large interception storage capacity. This means that a large amount of precipitation is caught in the forest canopy before reaching the ground and becoming available for runoff. Precipitation intercepted in this way is later evaporated back into the atmosphere. Forest also has the ability to transpire moisture from the soil via its root system. This leaves less water available for runoff.

Pasture vegetation is typically found in rural areas where the forest has been cleared and replaced with shrub or grass lots. Some pasture areas may be used to graze livestock. The interception storage and soil evapotranspiration capacity of pasture are less than forest. Soils may have also been compressed by mechanized equipment during clearing activities. Livestock can also compact soil. Pasture areas typically produce more runoff (particularly surface runoff and interflow) than forest areas.

Lawn vegetation is representative of the suburban vegetation found in typical residential developments. Soils have been compacted by earth moving equipment, often with a layer of topsoil removed. Sod and ornamental bushes replace native vegetation. The interception storage and evapotranspiration of lawn vegetation is less than pasture, more runoff results.

Predevelopment default land conditions are forest, although the user has the option of specifying pasture if there is documented evidence that pasture vegetation was native to the predevelopment site. If this option is used, the change will be recorded in the WWHM output.

Forest vegetation is represented by specific HSPF parameter values that represent the forest hydrologic characteristics. As described above, the existing regional HSPF parameter values for forest are based on undisturbed second-growth Douglas fir forest found today in western Washington lowland watersheds.

Postdevelopment vegetation will reflect the new vegetation planned for the site. The user has the choice of forest, pasture, and landscaped vegetation. Forest and pasture are only appropriate for postdevelopment vegetation in parcels separate from standard residential or non-standard residential/commercial developments. Development areas must only be designated as forest or pasture where legal restrictions can be documented that protect these areas from future disturbances. WWHM assumes the pervious land portion of developed areas is covered with lawn vegetation, as described above.

6. Development land use data.

The WWHM user must enter land use information for the pre-developed condition and the proposed development condition into the model. WWHM users must select the appropriate land use category and slope, where slope of 0-5% is flat, 5-15% is moderate, and greater than 15% is steep. The land use categories include: Impervious areas such as Roads, Roof, Driveways, Sidewalks, Parking, Ponds; and Pervious areas such as Lawn (this includes lawn, garden, areas with ornamental plants, and any natural areas not legally protected from future disturbance), Forest, and Pasture. The soils types available are A/B (outwash), C (Till), and Saturated (wetland).

Forest and pasture vegetation areas are only appropriate for separate undeveloped parcels dedicated as open space, wetland buffer, or park within the total area of the standard residential development. ***Development areas must only be designated as forest or pasture where legal restrictions can be documented that protect these areas from future disturbances*.**

Impervious, as the name implies, allows no infiltration of water into the pervious soil. All runoff is surface runoff. Impervious land typically consists of paved roads, sidewalks, driveways, and parking lots. Roofs are also impervious.

For the purposes of hydrologic modeling, only effective impervious area is categorized as impervious. Effective impervious area (EIA) is the area where there is no opportunity for surface runoff from an impervious site to infiltrate into the soil before it reaches a conveyance system (pipe, ditch, stream, etc.). An example of an EIA is a shopping center parking lot where the water runs off the pavement and directly goes into a catch basin where it then flows into a pipe and eventually to a stream. In contrast, some homes with impervious roofs collect the roof runoff into roof gutters and send the water down downspouts. When the water reaches the base of the downspout it can be directed ~~either into a pipe (which is connected to the local storm sewer), dumped onto a splash block, or directed into a dispersion trench. Roof water sent to a dispersion trench has the opportunity to spread out into the yard and soak into the soil. Such roofs are not considered to be effective impervious area if the criteria in Section 3.1.2. are met (see below for more information).~~into an infiltration system. If roof runoff is infiltrated according to the requirements of BMP T5.10A, the roof area can be considered ineffective impervious area. The roof area may be discounted from the project area entered into WWHM.

The non-effective impervious area uses the adjacent or underlying soil and vegetation properties. Vegetation often varies by the type of land use. The assumption is made in the WWHM that the EIA equals the TIA (total impervious area). This is consistent with King County's determination of EIA acres for new developments. Where appropriate, the TIA can be reduced through the use of runoff credits (more on that below).

Earlier versions of WWHM (WWHM1 and WWHM2) provided the 2 optional features below for modeling of Standard Residential development and obtaining flow credits for incorporating low impact development (LID) techniques ~~below~~. Later upgrades to WWHM have provided for direct input of the standard residential development details by the WWHM users. ~~An upcoming (2012) upgrade to~~ WWHM2012 ~~will enable~~allow direct modeling of some LID techniques through use of new LID Elements. Other LID techniques will continue to be modeled in accordance with Appendix C of the Stormwater Management Manual for Western Washington.

Standard Residential: For housing developments where lot-specific details (e.g., size of roof and driveway) are not yet determined, the earlier versions of WWHM provided a set of default assumptions about the amount of impervious area per lot and its division between driveways and

rooftops under the "Standard Residential" development land use type. Later versions of WWHM (e.g., WWHM3 or WWHM2012) do not have this option programmed in the model but the land use assumptions for the "Standard Residential" development are given below.

Ecology has selected a standard impervious area of 4200 square feet per residential lot, with 1000 square feet of that as driveway, walkways, and patio area, and the remainder as rooftop area. The rest of the lot acres will be assumed to be landscaped area (including lawn). The user inputs the number of residential lots and the total acreage of the residential lots (public right-of-way acreages and non-residential lot acreages excluded). The number of residential lots and the associated number of acres will be used to compute the average number of residential lots per acre. This value together with the number of residential lots and the impervious area in the public right-of-way will be used by the model to calculate the TIA for the proposed development. The areas covered by streets, parking areas, and sidewalk areas are input separately by the user.

Runoff Credits: Please note that the modeling of runoff credits using some of the low impact development techniques described in Appendix C have been ~~will be~~ updated. ~~A new version of WWHM,~~ WWHM 2012~~,~~ can now ~~is currently in development and will~~ provide LID modeling capabilities in accordance ~~to~~ with this manual. **The following LID credit modeling is based on modeling in earlier versions of WWHM (WWHM2 and WWHM3)**.

Runoff credits can be obtained using any or all of the low impact development methods listed below. The WWHM has an automated procedure for taking credits for infiltrating or dispersing roof runoff - methods #1 and #2 below. Credits for using methods 3,4,8, and 9 must be taken by following the guidance in Appendix C. Methods 5, 6, and 10 also have guidance in Appendix C for taking credits. However, the new LID elements in WWHM2012 would allow direct modeling of methods 4, 5, 6, and 10~~Ecology anticipates that these techniques will have new "Elements" in the 2012 WWHM update that will allow~~ which would be a ~~for~~ better representation of how they function to reduce surface runoff. Roof areas using method ~~#5~~ #7 -rainwater harvesting systems designed in accordance with the guidance in Appendix C need not be entered into the model. Also, if using method 11 – Full dispersion – the runoff model need not be used for the area that meets the criteria in Appendix C.

1. Infiltrate roof runoff
2. Disperse roof runoff
3. Disperse driveway and other hard surface runoff
4. Porous pavement for driveways and walks
5. Porous pavement for roads and parking lots
6. Vegetated Roofs
7. Rainwater Harvesting
8. Reverse slope sidewalks
9. Low impact foundations
10. Bioretention Areas
11. Full dispersion

1. Infiltrate Roof Runoff

Credit is given for disconnecting the roof runoff from the development's stormwater conveyance system and infiltrating on the individual residential lots. The WWHM assumes that this infiltrated roof runoff does not contribute to the runoff flowing to the stormwater detention pond site. It disappears from the system and does not have to be mitigated. See Section 3.1.1. of Volume III for design requirements for downspout infiltration systems.

2. Disperse Roof Runoff

Credit is also given for disconnecting the roof runoff from the development's stormwater conveyance system and dispersing it on the lawn/landscaped surface of individual lots. If the runoff is dispersed using a dispersion trench designed according to the requirements of Section 3.1.2. of Volume III, on single-family lots greater than 22,000 square feet, and the vegetative flow path of the runoff is 50 feet or longer through undisturbed native or compost-amended soils, the roof area can be entered into the model as landscaped area rather than impervious surface.

3. Disperse driveway and other hard surface runoff:

If runoff is dispersed in accordance with the guidance in BMP T5.11 or BMP T5.12, the driveway or other hard surface may be modeled as landscaped area.

4. & 5. Porous pavement

The third option for runoff credit is the use of porous pavement for private driveways, sidewalks, streets, and parking areas. ~~Until such time as WWHM is upgraded to directly model porous pavements, t~~The LID credit guidance in Appendix C ~~should be followed~~ was developed before WWHM2012, with the capability to directly model permeable pavements, became available.~~-~~ The LID credit guidance in Appendix C ~~It~~ will direct you to enter a certain percentage of the pervious pavement area into the landscaped area category rather than the street/sidewalk/parking lot category. Even ~~after the~~ thoughWWHM2012 has other methods for calculating the impacts of permeable pavement ~~update~~, th~~os~~e methods described in Part 1 of Appendix C are still appropriate to use where the pervious pavement does not have a significant depth of base course for storage.

Follow similar procedures for vegetated roofs, reverse slope sidewalks, and low impact foundations. The LID credit guidance of Appendix C directs how these surfaces should be entered into the model. If you do not know the specific quantities of the different land cover types for your development (e.g., the individual lots will be sold to builders who will determine layout and size of home), you should start with the assumption of 4200 sq. ft. of impervious area per lot – including 1,000 sq. ft. for driveways, and begin making adjustments in those totals as allowed in the LID guidance of Appendix C

Other Development Options and Model Features

WWHM allows the flexibility of bypassing a portion of the development area around a flow control facility and/or having off-site inflow that is entering the development area pass through the flow control facility.

Bypass occurs when a portion of the development does not drain to a stormwater detention facility. On-site runoff from a proposed development project may bypass the flow control facility provided that all of the following conditions are met.

1. Runoff from both the bypass area and the flow control facility converges within a quarter-mile downstream of the project site discharge point.
2. The flow control facility is designed to compensate for the uncontrolled bypass area such that the net effect at the point of convergence downstream is the same with or without bypass.
3. The 100-year peak discharge from the bypass area will not exceed 0.4 cfs.
4. Runoff from the bypass area will not create a significant adverse impact to downstream drainage systems or properties.
5. Water quality requirements applicable to the bypass area are met.

Off-site Inflow occurs when an upslope area outside the development drains to the flow control facility in the development. If the existing 100-year peak flow rate from any upstream off-site area is greater than 50% of the 100-year developed peak flow rate (undetained) for the project site, then the runoff from the off-site area must not flow to the on-site flow control facility. The bypass of off-site runoff must be designed so as to achieve both of the following:

1. Any existing contribution of flows to an on-site wetland must be maintained.
2. Off-site flows that are naturally attenuated by the project site under predeveloped conditions must remain attenuated, either by natural means or by providing additional on-site detention so that peak flows do not increase.

<u>Application of WWHM in Re-developments Projects</u>

WWHM allows only forest or pasture as the predevelopment land condition in the Design Basin screen. This screen does not allow other types of land uses such as impervious and landscaped areas to be entered for existing condition. However, WWHM can be used for redevelopment projects by modeling the existing developed areas that are not subject to the flow control requirements of Volume I as off-site areas. For the purposes of predicting runoff from such an existing developed area, enter the existing area in the Off-site Inflow screen. This screen is designed to predict runoff from impervious and landscaped areas in addition to the forest and pasture areas. If the existing 100-year peak flow rate from the existing developed areas that are not subject to flow control is greater than 50% of the 100-year developed peak flow rate (undetained but subject to the flow control requirements of Volume I), then the runoff from the off-site area must not be allowed to flow to the on-site flow control facility.

7. PERLND and IMPLND parameter values.

In WWHM (and HSPF) pervious land categories are represented by PERLNDs; impervious land categories (EIA) by IMPLNDs. An example of a PERLND is a till soil covered with forest vegetation. This PERLND has a unique set of HSPF parameter values. For each PERLND there are 16 parameters that describe various hydrologic factors that influence runoff. These range from interception storage to infiltration to active ground water evapotranspiration. Only four parameters are required to represent IMPLND.

The PERLND and IMPLND parameter values to be used in the WWHM are listed below. These values are based on regional parameter values developed by the U.S. Geological Survey for watersheds in western Washington (Dinicola, 1990) plus additional HSPF modeling work conducted by AQUA TERRA Consultants.

PERLND Parameters

	TF	TP	TL	OF	OP	OL	SF	SP	SL
Name									
LZSN	4.5	4.5	4.5	5.0	5.0	5.0	4.0	4.0	4.0
INFILT	0.08	0.06	0.03	2.0	1.6	0.80	2.0	1.8	1.0
LSUR	400	400	400	400	400	400	100	100	100
SLSUR	0.10	0.10	0.10	0.10	0.10	0.10	0.001	0.001	0.001
KVARY	0.5	0.5	0.5	0.3	0.3	0.3	0.5	0.5	0.5
AGWRC	0.996	0.996	0.996	0.996	0.996	0.996	0.996	0.996	0.996
INFEXP	2.0	2.0	2.0	2.0	2.0	2.0	10.0	10.0	10.0
INFILD	2.0	2.0	2.0	2.0	2.0	2.0	2.0	2.0	2.0
BASETP	0.0	0.0	0.0	0.0	0.0	0.0	0.0	0.0	0.0
AGWETP	0.0	0.0	0.0	0.0	0.0	0.0	0.7	0.7	0.7
CEPSC	0.20	0.15	0.10	0.20	0.15	0.10	0.18	0.15	0.10
UZSN	0.5	0.4	0.25	0.5	0.5	0.5	3.0	3.0	3.0
NSUR	0.35	0.30	0.25	0.35	0.30	0.25	0.50	0.50	0.50
INTFW	6.0	6.0	6.0	0.0	0.0	0.0	1.0	1.0	1.0
IRC	0.5	0.5	0.5	0.7	0.7	0.7	0.7	0.7	0.7
LZETP	0.7	0.4	0.25	0.7	0.4	0.25	0.8	0.8	0.8

PERLND types:

TF = Till Forest
TP = Till Pasture
TL = Till Lawn
OF = Outwash Forest
OP = Outwash Pasture
OL = Outwash Lawn
SF = Saturated Forest
SP = Saturated Pasture
SL = Saturated Lawn

PERLND parameters:

LZSN = lower zone storage nominal (inches)
INFILT = infiltration capacity (inches/hour)
LSUR = length of surface overland flow plane (feet)
SLSUR = slope of surface overland flow plane (feet/feet)
KVARY = ground water exponent variable ($inch^{-1}$)
AGWRC = active ground water recession constant (day^{-1})
INFEXP = infiltration exponent
INFILD = ratio of maximum to mean infiltration
BASETP = base flow evapotranspiration (fraction)
AGWETP = active ground water evapotranspiration (fraction)
CEPSC = interception storage (inches)
UZSN = upper zone storage nominal (inches)
NSUR = roughness of surface overland flow plane (Manning's n)
INTFW = interflow index
IRC = interflow recession constant (day-1)
LZETP = lower zone evapotranspiration (fraction)

A more complete description of these PERLND parameters is found in the HSPF User Manual (Bicknell et al, 1997).

PERLND parameter values for other additional soil/vegetation categories will be investigated and added to the WWHM, as appropriate.

IMPLND Parameters

	EIA
Name	
LSUR	400
SLSUR	0.01
NSUR	0.10
RETSC	0.10

IMPLND parameters:

LSUR = length of surface overland flow plane (feet)
SLSUR = slope of surface overland flow plane (feet/feet)
NSUR = roughness of surface overland flow plane (Manning's n)
RETSC = retention storage (inches)

A more complete description of these IMPLND parameters is found in the HSPF User Manual (Bicknell et al, 1997).

The PERLND and IMPLND parameter values will be transparent to the general user. The advanced user will have the ability to change the value of a particular parameter for that specific site. However, the only PERLND and IMPLND parameters that are authorized to be adjusted by the user are LSUR, SLSUR, and NSUR. These are parameters whose values are observable at an undeveloped site, and whose values can be reasonably estimated for the proposed development site. Any such changes will be recorded in the WWHM output. The user should submit justifications for changes with their project submittal to the reviewing jurisdiction. ~~Until~~ Ecology will ~~has~~ issue~~d~~ guidance within the WWHM Users Manual on the range of and methods for estimating acceptable parameter changes. ~~, users shall not change the PERLND or IMPLND parameter values.~~

Earlier versions of WWHM (WWHM1 and WWHM2) provided only one category of moderate land slope (typically 5-15% slopes). In more recent versions of WWHM (WWHM3 and WWHM2012), two additional land categories have been added to account for the flat (0-5%) and steep (15-25%) land slopes.

Surface runoff and interflow will be computed based on the PERLND and IMPLND parameter values. Ground water flow can also be computed and added to the total runoff from a development if there is a reason to believe that ground water would be surfacing (such as where there is a cut in a slope). However, the default condition in WWHM assumes that no ground water flow from small catchments reaches the surface to become runoff. This is consistent with King County procedures (King County, 1998).

8. Guidance for flow-related standards.

Use flow-related standards to determine whether or not a proposed stormwater facility will provide a sufficient level of mitigation for the additional runoff from land development. Guidance is provided on the standards that must be met to comply with the Ecology Stormwater Management Manual.

There are three flow-related standards stated in Volume I: Minimum Requirement #5 – On-site Stormwater Management; Minimum Requirement #7 - Flow Control and Minimum Requirement #8 - Wetlands Protection.

Minimum Requirement #5 allows the user to demonstrate compliance with the LID Performance Standard of matching developed discharge durations to pre-developed durations for the range of pre-developed discharge rates from 8% of the 2-year peak flow to 50% of the 2-year peak flow. If the post-development flow duration values exceed any of the predevelopment flow levels between 8% and 50% of the 2-year predevelopment peak flow values, then the LID performance standard not been met.

Minimum Requirement #7 specifies that stormwater discharges to streams shall match developed discharge durations to predeveloped durations for the range of predeveloped discharge rates from 50% of the 2-year peak flow up to the full 50-year peak flow. In general, matching discharge durations between 50% of the 2-year and 50-year will result in matching the peak discharge rates in this range.

WWHM uses the predevelopment peak flow value for each water year to compute the predevelopment 2- through 100-year flow frequency values. The postdevelopment runoff 2- through 100-year flow frequency values are computed from the outlet of the proposed stormwater facility. The user must enter the stage-surface area-storage-discharge table (HSPF FTABLE) for the stormwater facility. The model then routes the postdevelopment runoff through the stormwater facility. As with the predevelopment peak flow values, the model will select the maximum developed flow value for each water year to compute the developed 2- through 100-year flow frequency.

The actual flow frequency calculations are made using the federal standard Log Pearson Type III distribution described in Bulletin 17B (United States Water Resources Council, 1981). This standard flow frequency distribution is provided in U.S. Geological Survey program J407, version 3.9A-P, revised 8/9/89. The Bulletin 17B algorithms in program J407 are included in the WWHM calculations.

Minimum Requirement #7 is based on flow duration. WWHM will use the entire predevelopment and post-development runoff record to compute flow duration. The standard requires that post-development runoff flows must not exceed the flow duration values of the predevelopment runoff between the predevelopment flow values of 50 percent of the 2-year flow and 100 percent of the 50-year flow.

Flow duration is computed by counting the number of flow values that exceed a specified flow level. The specified flow levels used by WWHM in the flow duration analysis are listed below.

1. 50% of the 2-year predevelopment peak flow.
2. 100% of the 2-year predevelopment peak flow.
3. 100% of the 50-year predevelopment peak flow.

In addition, flow durations are computed for 97 other incremental flow values between 50 percent of the 2-year predevelopment peak flow and 100 percent of the 50-year predevelopment peak flow.

There are three criteria by which flow duration values are compared:

1. If the postdevelopment flow duration values exceed any of the predevelopment flow levels between 50% and 100% of the 2-year predevelopment peak flow values (100 Percent Threshold) then the flow duration requirement has not been met.

2. If the postdevelopment flow duration values exceed any of the predevelopment flow levels between 100% of the 2-year and 100% of the 50-year predevelopment peak flow values more than 10 percent of the time (110 Percent Threshold) then the flow duration requirement has not been met.
3. If more than 50 percent of the flow duration levels exceed the 100 percent threshold then the flow duration requirement has not been met.

The results are provided in the WWHM report.

Minimum Requirement #8 specifies that total discharges to wetlands must not deviate by more than 20% on ~~a single event~~ daily basis, and must not deviate by more than 15% on ~~a~~ monthly basis. Flow components feeding the wetland under both Pre-and Post-development scenarios are assumed to be the sum of the surface, interflow, and ground water flows from the project site. The WWHM is being revised to more easily allow this comparison.

References for Western Washington Hydrology Model

Beyerlein, D.C. 1996. Effective Impervious Area: The Real Enemy. Presented at the Impervious Surface Reduction Research Symposium, The Evergreen State College. Olympia, WA.

Bicknell, B.R., J.C. Imhoff, J.L. Kittle Jr, A.S. Donigian Jr, and R.C. Johanson. 1997. Hydrological Simulation Program – Fortran User's Manual for Version 11. EPA/600/R-97/080. National Exposure Research Laboratory. Office of Research and Development. U.S. Environmental Protection Agency. Research Triangle Park, NC.

Dinicola, R.S. 1990. Characterization and Simulation of Rainfall-Runoff Relations for Headwater Basins in Western King and Snohomish Counties, Washington. Water-Resources Investigations Report 89-4052. U.S. Geological Survey. Tacoma, WA.

King County. 1998. Surface Water Design Manual. Department of Natural Resources. Seattle, WA.

United States Water Resources Council. 1981. Guidelines for Determining Flood Flow Frequency. Bulletin #17B of the Hydrology Committee. Washington, DC.

This page purposely left blank

Appendix III-C Washington State Department of Ecology Low Impact Development Flow Modeling Guidance

Note – The modeling guidance in this section was developed for use with an earlier version of WWHM, WWHM3. Since then, WWHM has been updated to incorporate direct modeling of some LID techniques in WWHM2012 to better represent how they would function to reduce surface runoff. The new LID elements include Permeable Pavement, Green Roof, and Bio-retention discussed in Part 2 of this Appendix.

The Washington State Department of Ecology (Ecology) requires the use of the Western Washington Hydrology Model (WWHM) and other approved runoff models (currently approved alternative models are the King County Runoff Time Series and MGS Flood) for estimating surface runoff and sizing stormwater control and treatment facilities. Part 1 of this appendix explains how to represent various LID techniques within WWHM 3 so that their benefit in reducing surface runoff can be estimated. The lower runoff estimates should translate into smaller stormwater treatment and flow control facilities. In certain cases, use of various techniques can result in the elimination of those facilities.

As Puget Sound gains more experience with and knowledge of LID techniques, the design criteria will evolve. Also, our ability to model their performance will change as our modeling techniques improve. Therefore, we anticipate this guidance will be updated periodically to reflect the new knowledge and modeling approaches.

One such update should be available later this year (2012). The updated guidance will explain modeling techniques to be used with the latest publicly available version of the WWHM (tentative name: WWHM 2012). A summary of the modeling techniques planned for WWHM 2012 is included as Part 2 in this appendix. Because WWHM 2012 and the updated LID modeling guidance won't be released until later this year, municipal stormwater permittees are not obligated to require its use ~~this~~ during the 2013-2018 permit term. However, because WWHM 2012 will make modeling LID developments easier and more technically accurate; and because it will include a number of other updates and improvements (e.g., updated rainfall files), Ecology will encourage its use. We anticipate that most local governments will choose to require its use or an equivalent program (e.g., an updated MGS Flood) once they are readily available. Ecology intends to make sure that sufficient training opportunities are available on WWHM 2012, so that municipal staff and designers have adequate opportunity to become familiar with it prior to the deadlines in the municipal permits for adopting and applying updated stormwater requirements.

In previous editions of the manual, Appendix III-C included a summary of design criteria for each LID BMP. The reader is now directed to Volume V for those design criteria.

Part 1: Guidance for Use with WWHM 3

C.1 Permeable Pavements

C.1.1 Porous Asphalt or Concrete

Description	Model Surface as
1. Base material laid above surrounding grade:	
a) Without underlying perforated drain pipes to collect stormwater	Grass over underlying soil type (till or outwash)
b) With underlying perforated drain pipes for stormwater collection:	
at or below bottom of base layer	Impervious surface
elevated within the base course	Impervious surface
2. Base material laid partially or completely below surrounding grade:	
a) Without underlying perforated drain pipes underlying soil type	Option 1: Grass over
	Option 2: Impervious surface routed to a Gravel Trench/Bed[1]
b) With underlying perforated drain pipes:	
at or below bottom of base layer	Impervious surface
elevated within the base course[2]	Model as impervious surface routed to a Gravel Trench/Bed[1]

C.1.2 Grid/lattice systems (non-concrete) and Paving Blocks

Description	Model Surface as
1. Base material laid above surrounding grade	
a) Without underlying perforated drain pipes	Grid/lattice systems: grass on underlying soil (till or outwash).
	Paving Blocks: 50% grass on underlying soil; 50% impervious.
b) With underlying perforated drain pipes	Impervious surface

[1] See section C.11 for detailed instructions concerning how to represent the base material below grade as a gravel trench/bed in the Western Washington Hydrology Model.

[2] If the perforated pipes function is to distribute runoff directly below the wearing surface, and the pipes are above the surrounding grade, follow the directions for 2a above.

2. Base material laid partially or completely below surrounding grade

a) Without underlying perforated drain pipes	Option 1: Grid/lattice as grass on underlying soil. Paving blocks as 50% grass; 50% impervious. Option 2: Impervious surface routed to a Gravel Trench/Bed.[1]
b) With underlying perforated drain pipes	
at or below bottom of base layer	Impervious surface
elevated within the base course[2]	Model as impervious surface routed to a Gravel Trench/Bed.[1]

C.2 Dispersion

C.2.1 Full Dispersion for the Entire Development Site

Residential Developments that implement BMP T5.30 do not have to use approved runoff models to demonstrate compliance. They are assumed to fully meet the treatment and flow control requirements.

C.2.2 Full Dispersion for Part of the Development Site

Those portions of residential developments that implement BMP T5.30 do not have to use approved runoff models to demonstrate compliance. They are assumed to fully meet the treatment and flow control requirements.

C.2.3 Partial Dispersion on residential lots and commercial buildings

If roof runoff is dispersed on single-family lots or commercial lots- according to the design criteria and guidelines in BMP T5.10B of Volume III, ~~and the vegetative flow path is 50 feet or larger~~ through undisturbed native landscape or lawn/landscape area that meets the guidelines in BMP T5.13, the user has two options.

Option 1: The roof area may be modeled as landscaped area, or as 50% landscape/50% impervious. Do this in WWHM on the Mitigated Scenario screen by entering the roof area into one of the entry options for dispersal of impervious area runoff.

Option #2: The user may apply the "lateral flow icons." In this option, the "Lateral Flow Impervious Area" icon is used to represent the roof area(s). That icon is then connected to a "Lateral Flow Basin" icon that represents the pervious area into which the roof is being dispersed. The user should direct surface runoff and interflow from the "lateral flow basin" to a treatment system, retention/detention basin, or directly to a point of compliance.

Whether option #1 or #2 is used, the vegetated flow path is measured from the downspout or dispersion system discharge point to the downgradient edge of the vegetated area. That flow path must be at least 50 feet unless a dispersion trench per BMP T5.10B is used with a vegetated flow path of 25 to 50 feet. ~~to use these options.~~

Where BMP T5.11 (concentrated flow dispersion) or BMP T5.12 (sheet flow dispersion) of Volume V – Chapter 5 is used to disperse runoff from impervious areas other than roofs into a native vegetation area or an area that meets the guidelines in BMP T5.13 of Volume V – Chapter 5, the same two options as described above are available. The user may model the impervious area as landscaped area, 50% landscape/50% impervious, or the "lateral flow" icons may be used. As above, the vegetated flow path from the dispersal point to the downgradient edge of the vegetated area. must be at least 50 feet, unless a dispersion trench (see BMP 5.10B) is used with a vegetated flow path of 25 to 50 feet.

C.3 Downspout Full Infiltration

Roof areas served by downspouts that drain to infiltration dry wells or infiltration trenches that are sized in accordance with the guidance in BMP T5.10A do not have to be entered into the runoff model. They are assumed to fully infiltrate the roof runoff.

C.4 Vegetated Roofs

C.4.1 Option 1 Design Criteria

- 3 inches to 8 inches of soil/growing media

Runoff Model Representation

- 50% till landscaped area; 50% impervious area

C.4.2 Option 2 Design Criteria

- $\geq$ 8 inches of soil/media

Runoff Model Representation

- 50% till pasture; 50% impervious area

C.5 Rainwater Harvesting

Do not enter drainage area into the runoff model.

Note: This applies only to drainage areas for which a monthly water balance indicates no overflow of the storage capacity.

C.6 Reverse Slope Sidewalks

- Enter sidewalk area as landscaped area over the underlying soil type.
- Alternatively, use the "lateral flow" icons. Use the "Lateral Flow Impervious Area" icon for the sidewalk, and use the "Lateral Flow Basin" icon for the downgradient vegetated area.

C.7 Minimal Excavation Foundations

- Where residential roof runoff is dispersed on the upgradient side of a structure in accordance with the design criteria and guidelines in BMP T5.10B of Volume III – Chapter 3, the tributary roof area may be modeled as pasture on the native soil.
- In "step forming," the building area is terraced in cuts of limited depth. This results in a series of level plateaus on which to erect the form boards. Where "step forming" is used on a slope, the square footage of roof that can be modeled as pasture must be reduced to account for lost soils. The following equation (suggested by Rick Gagliano of Pin Foundations, Inc.) can be used to reduce the roof area that can be modeled as pasture.

$$A_1 - \frac{dC(.5)}{dP} X A_1 = A_2$$

A_1 = roof area draining to up gradient side of structure

dC = depth of cuts into the soil profile

dP = permeable depth of soil (The A horizon plus an additional few inches of the B horizon where roots permeate into ample pore space of soil).

A_2 = roof area that can be modeled as pasture on the native soil. The rest of the roof is modeled as impervious surface unless it is dispersed in accordance with the next bullet.

- If roof runoff is dispersed downgradient of the structure in accordance with the design criteria and guidelines in BMP T5.10B of Volume III – Chapter 3, AND there is at least 50 feet of vegetated flow path through native material or lawn/landscape area that meets the guidelines in BMP T5.13 of Volume V – Chapter 5, the tributary roof areas may be modeled as landscaped area. Alternatively, use the lateral flow elements to send roof runoff onto the lawn/landscape area that will be used for dispersion.

C.8 Tree Retention and Planting

C.8.1 Tree Retention Flow Control Credit

Flow control credits for retained trees are provided in Table C.1[cg1] by tree type. These credits can be applied to reduce impervious or other hard surface area requiring flow control. Credits are given as a percentage of the existing tree canopy area. The minimum credit for existing trees ranges from 50 to 100 square feet.

Table C.1
Flow Control Credits for Retained Trees.

Tree Type	Credit
Evergreen	20% of canopy area (minimum of 100 sq. ft./tree
Deciduous	10% of canopy area (minimum of 50 sq. ft./tree

Impervious Area Mitigated = Σ Canopy Area x Credit (%)/100.

Tree credits are not applicable to trees in native vegetation areas used for flow dispersion or other flow control credit. Credits are also not applicable to trees in planter boxes. The total tree credit for retained and newly planted trees shall not exceed 25 percent of impervious or other hard surface requiring mitigation.

C.8.2 Newly Planted Tree Flow Control Credits

Flow control credits for newly planted trees are provided in Table C.2 [cg2]by tree type. These credits can be applied to reduce the impervious or other hard surface area requiring flow control. Credits range from 20 to 50 square feet per tree.

Table C.2.
Flow Control Credits for Newly Planted Trees.

Tree Type	Credit
Evergreen	50 sq. ft. per tree
Deciduous	20 sq. ft. per tree

Impervious Area Mitigated = Σ Number of Trees x Credit ~~(%)/100~~(sq. ft.).

Tree credits are not applicable to trees in native vegetation areas used for flow dispersion or other flow control credit. Credits are also not applicable to trees in planter boxes. The total tree credit for retained and newly planted trees shall not exceed 25 percent of impervious or other hard surface requiring mitigation.

C.9 Soil Quality and Depth

All areas that meet the soil quality and depth requirement may be entered into the model as pasture rather than lawn/landscaping.

C.10. Bioretention

C.10.1 Runoff Model Representation

Pothole design (bioretention cells)

Bioretention is represented by using the "Gravel trench/bed" icon with a steady-state infiltration rate. Proper infiltration rate selection is described below. The user inputs the dimensions of the gravel trench. Layer 1 on the input screen is the bioretention soil layer. Enter the soil depth and a porosity of 40%. Layer 2 is the free standing water above the bioretention soil. Enter the maximum depth of free standing water (i.e., up to the invert of an overflow pipe or a spillway, whatever engages first for surface release of water), and 100% for porosity. Bioretention with underlying perforated drain pipes that discharge to the surface can also be modeled as gravel trenches/beds with steady-state infiltration rates. However, the only volume available for storage (and modeled as storage as explained herein) is the void space within the imported material (usually sand or gravel) below the bioretention soil and below the invert of the drain pipe.

Using one of the procedures explained in Volume III - Chapter 3 of this manual, estimate the initial measured (a.k.a., short-term) infiltration rate of the native soils beneath the bioretention soil and any base materials. Because these soils are protected from fouling, no correction factor will be applied.

Facilities without an underdrain:

If using the default bioretention soil mix from Chapter 7 of Volume V, 6 inches per hour is the initial infiltration rate. The long-term rate is either 1.5 inches per hour or 3 inches per hour depending upon the size of the drainage area into the bioretention facility. See Chapter 7 of Volume V. If using a custom imported soil mix other than the default, its saturated hydraulic conductivity (used as the infiltration rate) must be determined using the procedures described in Chapter 7 of Volume V. The long-term infiltration rate is one-fourth or one-half of that rate depending upon the size of the drainage area. See Chapter 7 of Volume V.

Facilities with an underdrain:

When using an underdrained bioretention facility, the model must be run twice. Once to determine its treatment capacity, and once to determine its flow control benefits.

- For treatment capacity, when using the default bioretention soil media, the modeled infiltration rate shall be either 1.5 or 3 in/hr, depending on the drainage area. See the "Determining Bioretention soil mix infiltration rate" section in Chapter 7 of Volume V.
- For determining project compliance with Minimum Requirement #7, and/or the LID performance standard option of Minimum Requirement #5, the modeled infiltration rate shall be 6 in/hr when using the default bioretention soil media.

Linear Design: (bioretention swale or slopes)

Swales

Where a swale design has a roadside slope and a back slope between which water can pond due to an elevated, and an overflow/drainage pipe at the lower end of the swale, the swale may be modeled as a gravel trench/bed with a steady state infiltration rate. This method does not apply to swales that are underlain by a drainage pipe.

If the long-term infiltration rate through the imported bioretention soil is lower than the infiltration rate of the underlying soil, the surface dimensions and slopes of the swale should be entered into the WWHM as the trench dimensions and slopes. The effective depth is the distance from the soil surface at the bottom of the swale to the invert of the overflow/drainage pipe. If the infiltration rate through the underlying soil is lower than the estimated long-term infiltration rate through the imported bioretention soil, the trench/bed dimensions entered into the WWHM should be adjusted to account for the storage volume in the void space of the bioretention soil. Use 40 percent porosity for bioretention planting mix soils recommended above for Layer 1 in WWHM.

This procedure to estimate storage space should only be used on bioretention swales with a 1% slope or less. Swales with higher slopes should more accurately compute the storage volume in the swale below the drainage pipe invert.

For a swale design with an underdrain, the directions above under Pothole design apply.

C.10.2 WWHM Routing and Runoff File Evaluation

In WWHM3, all infiltrating facilities must have an overflow riser to model overflows that occur should the available storage be exceeded. So in the Riser/Weir screen, for the Riser head enter a value slightly smaller than the effective depth of the trench (say 0.1 ft below the Effective Depth); and for the Riser diameter enter a large number (say 10,000 inches) to ensure that there is ample capacity for overflows. The overflow should be routed to the point of compliance or a downstream facility. If the facility is underdrained, the underdrain must be similarly routed.

Within the model, route the runoff into the gravel trench by grabbing the gravel trench icon and placing it below the tributary "basin" area. Be sure to include the surface area of the bioretention

area in the tributary "basin" area. Run the model to produce the effluent runoff file from the theoretical gravel trench. For projects subject to the flow control standard, compare the flow duration graph of that runoff file to the target pre-developed runoff file for compliance with the flow duration standard. If the standard is not achieved a downstream retention or detention facility must be sized (using the WWHM standard procedures) and located in the field. A conveyance system should be designed to route all overflows from the bioretention areas to centralized treatment facilities, and to flow control facilities if flow control applies to the project.

C.10.3 Modeling of Multiple Bioretention facilities

Where multiple bioretention facilities are scattered throughout a development, it may be possible to cumulatively represent a group of them that have similar characteristics asone large bioretention facilityserving the cumulative area tributary to those facilities. For this to be a reasonable representation, the design of each bioretention facilityin the group should be similar (e.g., same depth of soil, same depth of surface ponded water, roughly the same ratio of impervious area to bioretention volume). In addition, the group should have similar (0.5x to 1.5x the average) controlling infiltration rates (i.e., either the long-term rate of the bioretention soil, or the initial rate of the underlying soil) that can be averaged as a single rate.

C.11 WWHM Instructions for Estimating Runoff Losses in Road Base Material Volumes that are Below Surrounding Grade

Introduction

This section applies to roads or parking lots that have been constructed with a permeable pavement and whose underlying base materials extend below the surrounding grade of land. The over-excavated volume can temporarily store water before it infiltrates or overflows to the surrounding ground surface. This section describes design criteria and modeling approaches for such designs.

Pre-requisite

Before using this guidance to estimate infiltration losses, the designer should have sufficient information to know whether adequate depth to a seasonal high ground water table, or other infiltration barrier (such as bedrock) is available. The minimum depth necessary is 3 feet as measured from the bottom of the base materials.

C.11.1 Instructions for Roads on Zero to 2% Grade

For road projects whose base materials extend below the surrounding grade, the below grade volume of base materials may be modeled in WWHM as a Gravel trench/bed with a set infiltration rate. The pervious pavement area is entered as a basin with an equivalent amount of impervious area that is routed to the gravel trench/bed. If an underdrain is installed at the bottom of the base materials, the pavement is modeled as impervious surface without a gravel trench.

First, place a "basin" icon in the "Schematic" grid. Enter the appropriate pre-developed and post-developed descriptions of your project site (or threshold discharge area of the project site). Assume that your pervious pavement surfaces are impervious surfaces. By placing a Gravel trench/bed icon below the basin icon in the Schematic grid, we are routing the runoff from the road and any other tributary area into the below grade volume that is represented by the Gravel trench/bed.

Enter the dimensions of the Gravel trench/bed: the length of the base materials that are below grade (parallel to the road); the width of the below grade material volume; and the depth. The available storage is the void volume in the gravel base layer below the pervious pavement. Enter the void ratio for the gravel base in the Layer 1 field. For example, for a project with a gravel base of 32% porosity, enter 0.32 for the Layer 1 porosity. If the below grade base course has perforated drainage pipes elevated above the bottom of the base course, but below the elevation of the surrounding ground surface, the ”Layer 1 Thickness” is the distance from the invert of the lowest pipe to the bottom of the base course.

Also in WWHM3, the Gravel trench/bed facilities must have an overflow riser to model overflows that occur should the available storage get exceeded. So for the “Riser Height”, enter a value slightly smaller than the effective depth of the base materials (say 0.1 ft below the Effective Total Depth); and for the “Riser Diameter” enter a large value (say 10,000 inches) to ensure that there is ample capacity should overflows from the trench occur.

For all infiltration facilities, WWHM3 has a button that asks, “Use Wetted Surface Area?” The answer should remain “NO.”

Using one of the procedures explained in Chapter 3, estimate the initial measured (a.k.a., short-term) infiltration rate of the native soils beneath the base materials. Enter that into the “measured infiltration rate” field. For the Infiltration Reduction Factor, enter 0.5.

Run the model to produce the overflow runoff file from the gravel trench. Compare the flow duration graph of that runoff file to the target pre-developed runoff file for compliance with the flow duration standard. If the standard is not achieved a downstream retention or detention facility must be sized (using the WWHM standard procedures) and located in the field. Design the road base materials to direct any water that does not infiltrate into a conveyance system that leads to the retention or detention facility.

C.11.2 Instructions for Roads on Grades above 2%

Road base material volumes that are below the surrounding grade and that are on a slope can be modeled as a gravel trench with an infiltration rate and a nominal depth. Represent the below grade volume as the gravel trench. Grab the gravel trench icon and place it below the “basin” icon so that the computer model routes all of the runoff into the gravel trench.

The dimensions of the gravel trench are: the length (parallel to and beneath the road) of the base materials that are below grade; the width of the below grade base materials; and an Effective Total Depth of 1 inch. In WWHM3, all infiltrating facilities must have an overflow riser to model overflows that occur should the available storage get exceeded. So, enter 0.04 ft (½ inch) for the “Riser Height” and a large Riser Diameter (say 1000 inches) to ensure that there is no head build up.

Note: If a drainage pipe is embedded and elevated in the below grade base materials, the pipe should only have perforations on the lower half (below the spring line) or near the invert. Pipe volume and trench volume above the pipe invert cannot be assumed as available storage space. If a drainage pipe is placed at the bottom of the base material, the pavement is modeled as an impervious surface without any gravel trench.

Estimate the infiltration rate of the native soils beneath the base materials. See the previous section (Instructions for Roads on Zero to 2% Grade) for estimating options and for how to enter infiltration rates and infiltration reduction factors for the gravel trench. In the “Material Layers”

field, enter ½ inch for Layer 1 Thickness and its appropriate porosity. For all infiltration facilities, WWHM3 has a button that asks, “Use Wetted Surface Area?” The answer should remain “NO.”

Run the model to produce the effluent runoff file from the gravel trench (base materials). Compare the flow duration graph of that runoff file to the target pre-developed runoff file for compliance with the flow duration standard. If the standard is not achieved a downstream retention or detention facility must be sized (using the WWHM standard procedures) and located in the field. The road base materials should be designed to direct any water that does not infiltrate into a conveyance system that leads to the retention or detention facility.

C.11.3 Instructions for Roads on a Slope with Internal Dams within the Base Materials that are Below Grade

In this option, a series of infiltration basins is created by placing relatively impermeable barriers across the below grade base materials at intervals downslope. The barriers inhibit the free flow of water down the grade of the base materials. The barriers must not extend to the elevation of the surrounding ground. Provide a space sufficient to pass water from upgradient to lower gradient basins without causing flows to surface out the sides of the base materials that are above grade.

Each stretch of trench (cell) that is separated by barriers can be modeled as a gravel trench. This is done by placing the “Gravel trench/bed” icons in series in WWHM. For each cell, determine the average depth of water within the cell (Average Cell Depth) at which the barrier at the lower end will be overtopped.

Specify the dimensions of each cell of the below-grade base materials using the “Gravel trench/bed” dimension fields for: the “Trench Length” (length of the cell parallel to the road); the “Trench Bottom Width”(width of the bottom of the base material); and the Effective Total Depth (the Average Cell Depth as determined above).

Also in WWHM3, all infiltrating facilities must have an overflow riser to model overflows that occur should the available storage get exceeded. For each trench cell, the available storage is the void space within the Average Cell Depth. WWHM calculates the storage/void volume of the trench cell using the porosity values entered in the “Layer porosity” fields. The value for the “***Riser Height***” should be slightly below the “Effective Total Depth” (say by about 1/8” to ¼”). For the ***Riser diameter***, enter a large number (say 10,000 inches) to ensure that there is ample capacity should overflows from the below-grade trench occur.

Each cell should have its own tributary drainage area that includes the road above it, any project site pervious areas whose runoff drains onto and through the road, and any off-site areas. Each drainage area is represented with a “basin” icon.

Below is the computer graphic representation of a series of Gravel trench/beds and the Basins that flow into them.

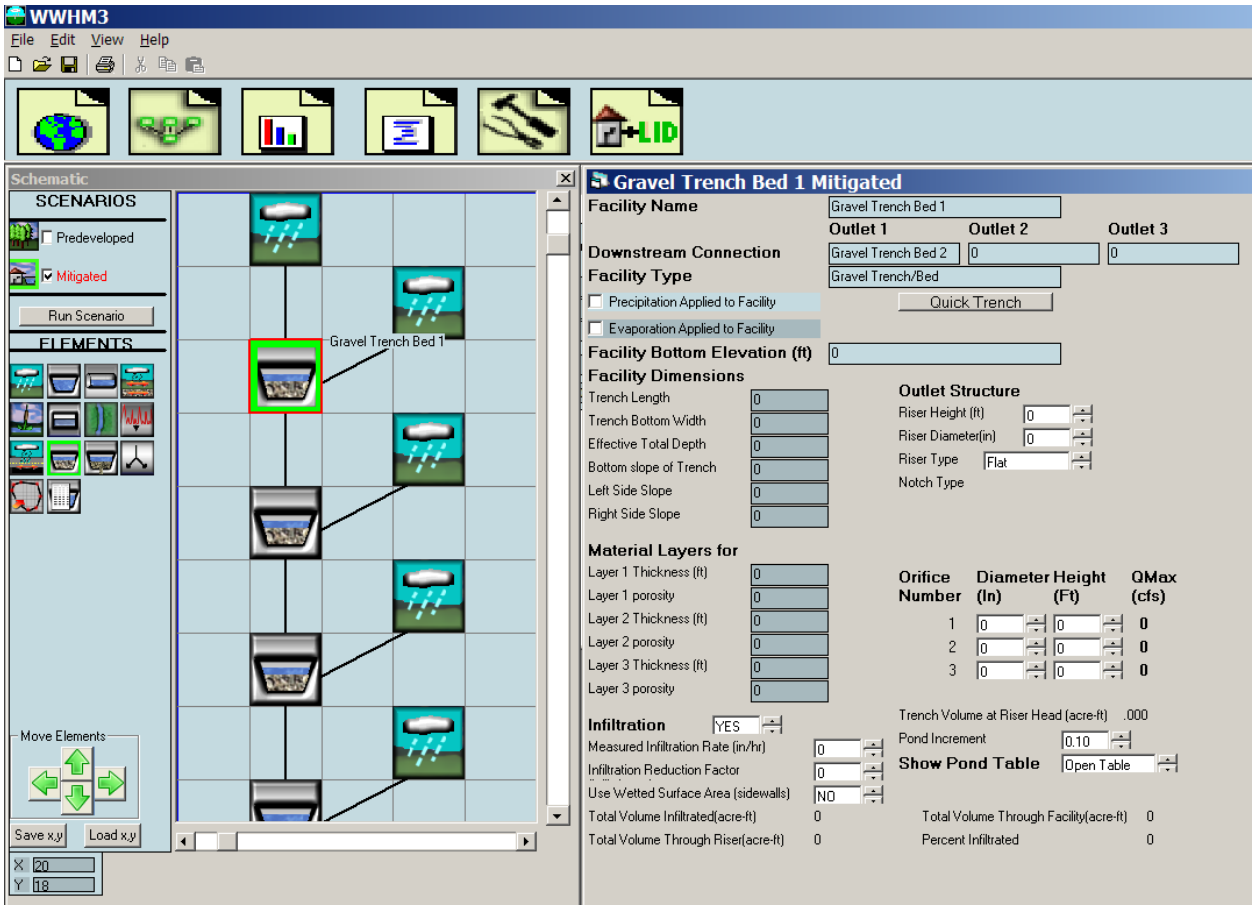

It is possible to represent a series of cells as one infiltration basin (using a single gravel trench icon) if the cells all have similar length and width dimensions, slope, and Average Cell Depth. A single “basin” icon is also used to represent all of the drainage area into the series of cells.

On the Gravel Trench screen under “Infiltration”, there is a field that asks the following “Use Wetted Surface Area?” By default, it is set to “NO”. It should stay “NO” if the below-grade base material trench has sidewalls steeper than 2 horizontal to 1 vertical.

Using the procedures explained above for roads on zero grade, estimate the infiltration rate of the native soils beneath the trench. Also as explained above, enter the appropriate values into the “Measured Infiltration Rate” and “Infiltration Reduction Factor” boxes.

Run the model to produce the effluent runoff file from the below grade trench of base materials. Compare the flow duration graph of that runoff file to the target pre-developed runoff file for compliance with the flow duration standard. If the standard is not achieved size a downstream retention or detention facility (using the WWHM standard procedures) and locate it in the field. Design the road base materials to direct any water that does not infiltrate into a conveyance system that leads to the retention or detention facility.

Part 2: Summary of WWHM 2012 Representation of LID BMPs

Downspout Dispersion – BMP T5.10B

Where BMP T5.10B – Downspout Dispersion - is used to disperse runoff into an undisturbed native landscape area or an area that meets BMP T5.13 – Soil Quality and Depth, and the

vegetated flow path is at least 50 feet, the connected roof area should be modeled as a lateral flow impervious area. Do this in WWHM on the Mitigated Scenario screen by connecting the dispersed impervious area to the lawn/landscape lateral flow soil basin element representing the area that will be used for dispersion.

Ecology may develop guidance for representing multiple downspout dispersions in a project site. If such guidance is not forthcoming, in situations where multiple downspout dispersions will occur, Ecology may allow the roof area to be modeled as a landscaped area (where the 50 foot flowpath requirement is met), or as 50% landscape/50% lawn (where a gravel trench is used to disperse into a vegetated area with a 25 to 50 foot flowpath) so that the project schematic in WWHM becomes manageable.

Concentrated Flow Dispersion – BMP T5.11

Where BMP T5.11- Concentrated Flow Dispersion - is used to disperse impervious area runoff into an undisturbed native landscape area or an area that meets BMP T5.13 – Soil Quality and Depth, and the vegetated flow path is at least 50 feet, the impervious area should be modeled as a lateral flow impervious area. Do this in WWHM on the Mitigated Scenario screen by connecting the dispersed impervious area to the lawn/landscape lateral flow soil basin element representing the area that will be used for dispersion.

Ecology may develop guidance for representing multiple concentrated flow dispersions in a project site. If such guidance is not forthcoming, in situations where multiple concentrated flow dispersions will occur, Ecology may allow the impervious area to be modeled as a landscaped area so that the project schematic in WWHM becomes manageable.

Sheet Flow Dispersion – BMP T5.12

Where BMPT5.12 – Sheet Flow Dispersion - is used to disperse impervious area runoff into an undisturbed native landscape area or an area that meets BMP T5.13 – Soil Quality and Depth, the impervious area should be modeled as a lateral flow impervious area. Do this in WWHM on the Mitigated Scenario screen by connecting the dispersed impervious area to the lawn/landscape lateral flow soil basin element representing the area that will be used for dispersion.

Ecology may develop guidance for representing multiple sheet flow dispersions in a project site. If such guidance is not forthcoming, in situations where multiple sheet flow dispersions will occur, Ecology may allow the impervious area to be modeled as a landscaped area so that the project schematic in WWHM becomes manageable.

Post-Construction Soil Quality and Depth – BMP T5.13

Enter area as pasture

Bioretention – BMP T7.30

Use new bioretention element for each type: cell, swale, or planter box.

The equations used by the elements are intended to simulate the wetting and drying of soil as well as how the soils function once they are saturated. This group of LID elements uses the modified Green Ampt equation to compute the surface infiltration into the amended soil. The water then moves through the top amended soil layer at the computed rate, determined by Darcy's and Van Genuchten's equations. As the soil approaches field capacity (i.e., gravity head is greater than matric head), the model determines when water will begin to infiltrate into the

second soil layer (lower layer). This occurs when the matric head is less than the gravity head in the first layer (top layer). The second layer is intended to prevent loss of the amended soil layer. As the second layer approaches field capacity, the water begins to move into the third layer – the gravel underlayer. For each layer, the user inputs the depth of the layer and the type of soil.

For the Ecology-recommended soil specifications for each layer in the design criteria for bioretention, the model will automatically assign pre-determined appropriate values for parameters that determine water movement through that soil. These include: wilting point, minimum hydraulic conductivity, maximum saturated hydraulic conductivity, and Van Genuchten number.

If a user opts to use soils that deviate from the recommended specifications, the default parameter values do not apply. The user will have to use the Gravel Trench element to represent the bioretention facility and follow the procedures identified for WWHM3.

Permeable Pavements – BMP T5.15

Use new porous pavement element.

User specifies pavement thickness & porosity, aggregate base material thickness & porosity, maximum allowed ponding depth & infiltration rate into native soil. For grades greater than 2%, see additional guidance.

Vegetated Roofs – BMP T5.17

Use new green roof element

User specifies media thickness, vegetation type, roof slope, and length of drainage.

Impervious Reverse Slope Sidewalks – BMP T5.18

Use the lateral flow elements to send the impervious area runoff onto the lawn/landscape area that will be used for dispersion.

Ecology may develop guidance for representing multiple impervious reverse slope sidewalks in a project site. If such guidance is not forthcoming, in situations where multiple impervious reverse slop sidewalks will occur, Ecology may allow the impervious area to be modeled as a landscaped area so that the project schematic in WWHM becomes manageable.

Minimal Excavation Foundations – BMP T5.19

- Where residential roof runoff is dispersed on the up gradient side of a structure in accordance with the design criteria and guidelines in BMP T5.10B, the tributary roof area may be modeled as pasture on the native soil.
- In “step forming,” the building area is terraced in cuts of limited depth. This results in a series of level plateaus on which to erect the form boards. Where “step forming” is used on a slope, the square footage of roof that can be modeled as pasture must be reduced to account for lost soils. The following equation (suggested by Rick Gagliano of Pin Foundations, Inc.) can be used to reduce the roof area that can be modeled as pasture.

$$A_1 - \frac{dC(.5)}{dP} \times A_1 = A_2$$

A_1 = roof area draining to up gradient side of structure

dC = depth of cuts into the soil profile

dP = permeable depth of soil (The A horizon plus an additional few inches of the B horizon where roots permeate into ample pore space of soil).

A_2 = roof area that can be modeled as pasture on the native soil. The rest of the roof is modeled as impervious surface unless it is dispersed in accordance with the next bullet.

- If roof runoff is dispersed down gradient of the structure in accordance with the design criteria and guidelines in BMP T5.10B, AND there is at least 50 feet of vegetated flow path through native material or lawn/landscape area that meets the guidelines in BMP T5.13, the tributary roof areas should be modeled as a lateral flow impervious area. This is done in WWHM on the Mitigated Scenario screen by connecting the dispersed impervious area to the lawn/landscape lateral flow soil basin element representing the area that will be used for dispersion.

  Ecology may develop guidance for representing multiple downspout dispersions in a project site. If such guidance is not forthcoming, in situations where multiple downspout (down gradient) dispersions will occur, Ecology may allow the roof area to be modeled as a landscaped area so that the project schematic in WWHM becomes manageable.

Full dispersion – BMP T5.30

Full downspout infiltration – BMP T5.10A

Rainwater Harvesting – BMP T5.20

If BMP design criteria are followed, the area draining to the three BMPs listed immediately above is not entered into the runoff model.

Newly planted trees – BMP T5.16

Retained trees – BMP T5.16

If BMP design criteria are followed, the total impervious/hard surface areas entered into the runoff model may be reduced by an amount indicated in the criteria for the tree BMPs listed immediately above.

Perforated Stub-out Connection – BMP T5.10C

Any flow reduction is variable and unpredictable. No computer modeling techniques are allowed that would predict any reduction in flow rates and volumes from the connected area.