DEPARTMENT OF
ECOLOGY
State of Washington

PROPOSED TECHNICAL SUPPORT DOCUMENT FOR: BP WEST COAST PRODUCTS LLC BP CHERRY POINT REFINERY TWO COKER HEATERS - REPLACEMENT PROJECT

Prepared by

Air Quality Program
Olympia, Washington

November 2016

TABLE OF CONTENTS

1. EXECUTIVE SUMMARY 1
2. INTRODUCTION 1
   2.1. The Permitting Process 1
      2.1.1. The PSD process 1
      2.1.2. The NOC process 3
   2.2. Site and Project Description 3
      2.2.1. Site description 3
      2.2.2. Project description 5
3. PSD APPLICABILITY REVIEW 9
   3.1. Overview and Permitting History 9
   3.2. Significant Emissions Increases Calculations 10
      3.2.1. Actual-to-potential test for new coker heaters and components 10
      3.2.2. Actual-to-projected-actual applicability test for modified and debottlenecked emissions units 11
      3.2.3. Hybrid test - significant emissions increase analysis summary 25
   3.3 Significant Net Emissions Increase Calculations 26
      3.3.1. Netting rules 26
      3.3.2. Netting analysis 27
4. BACT 29
   4.1. Definitions and Policy Concerning BACT 29
   4.2. BACT Analysis for Coker Heaters 30
      4.2.1. BACT analysis for coker heaters 31
      4.2.2. BACT feasibility review 36
      4.2.3. Modes of Operation 40
      4.2.4. NO_X BACT for coker heater direct emissions 40
      4.2.5. CO and VOC BACT for coker heater direct emissions 42
      4.2.6. PM, PM_{10}, $PM_{2.5}$ BACT for coker heater direct emissions 43
      4.2.7. SO_2 and H_2SO_4 BACT for coker heater direct emissions 44
      4.2.8. GHG BACT for coker heater direct emissions 46
      4.2.9. BACT for coker heater fugitive component leaks 47
5. AMBIENT AIR QUALITY IMPACTS ANALYSIS 48
   5.1. Regulatory Requirements 48

5.2. Maximum Criteria Pollutant Concentrations Predicted by AERMOD 49
5.2.1. Secondary $PM_{2.5}$ formation 51
5.3. Ozone Impacts 51
5.3.1. Ozone background information 51
5.3.2. BP ozone study results 52
5.4. Impacts on Class I Areas 53
5.4.1. AQRVs background information 56
5.4.2. BP AQRV analysis 57
6. ADDITIONAL IMPACTS ANALYSIS 60
6.1. Growth Analysis 60
6.1.1. Construction and growth impacts 60
6.2. Visibility (Class II Areas) 60
6.3. Soils and Vegetation Analysis 61
7. STATE ENVIRONMENTAL POLICY ACT 61
8. PUBLIC INVOLVEMENT 61
9. AGENCY CONTACT 62
REFERENCES 63
ACRONYMS AND ABBREVIATIONS 64

LIST OF FIGURES

Figure 1. The BP Cherry Point Refinery facility location map 4
Figure 2. The BP Cherry Point Refinery aerial photograph 5
Figure 3. Simplified coker diagram 6
Figure 4. Source and building locations with heights 49

LIST OF TABLES

Table 1. Emissions Increases of Regulated NSR Pollutants for New Coker Heaters (tpy)* 10
Table 2. BP's Chosen Dates for Baseline Actual Emissions 12
Table 3. Documentation of BP's Defense of Adjustments to BAE 12
Table 4. Emissions Increases of Regulated NSR Pollutants for Coke Drum Venting (tpy) 20
Table 5. Emissions Increases of Regulated NSR Pollutants for Green Coke Handling (tpy) 20
Table 6. Emissions Increases of Regulated NSR Pollutants for Calciners (tpy) 20
Table 7. Emissions Increases of Regulated NSR Pollutants for Hydrocracker (tpy) 21
Table 8. Emissions Increases of Regulated NSR Pollutants for the Sulfur Plant (tpy) 22
Table 9. Emissions Increases of Regulated NSR Pollutants for the Crude Heater (tpy) 22
Table 10. Emissions Increases of Regulated NSR Pollutants for the Crude Heater (tpy) 22
Table 11. Emissions Increases of Regulated NSR Pollutants for the South Vacuum Heater (tpy) 23
Table 12. Emissions Increases of Regulated NSR Pollutants for the #1 and #2 Reformer Heaters (tpy) 23
Table 13. Emissions Increases of Regulated NSR Pollutants for Naphtha Heaters (tpy) 23
Table 14. Emissions Increases of Regulated NSR Pollutants for the Hydrogen Plant (tpy) 24
Table 15. Emissions Increases of Regulated NSR Pollutants for the #1 DHDS Reboiler (tpy) .. 24
Table 16. Emissions Increases of Regulated NSR Pollutants for the ISOM (tpy) 24
Table 17. Emissions Increases of Regulated for Additional Affected Units* (tpy) 25
Table 18. Total Estimated Project Emissions, Net Emissions, and SERs 26
Table 19. Netting Analysis Changes in Emissions (tpy) 27
Table 20. Total Estimated Project Net Emissions and SERs 29
Table 21. Initial Technical Feasibility Assessment 36
Table 22. Ranking of Control Technologies for Coker Heaters (NO_X BACT) 40
Table 23. Ranking of Control Technologies for Coker Heaters (CO and VOC BACT) 42

Table 24. Ranking of Control Technologies for Coker Heaters (Particulate BACT)..... 43
Table 25. Ranking of Control Technologies for Coker Heaters (SO_2 and H_2SO_4 BACT)..... 44
Table 26. Ranking of Control Technologies for Coker Heaters (GHG BACT) 46
Table 27. Ranking of Control Technologies for Components (VOC and GHG BACT)..... 47
Table 28. Maximum Criteria Pollutant Concentrations Predicted by AERMOD 49
Table 29. Maximum TAP Concentrations Predicted by AERMOD..... 50
Table 30. PSD Modeling Review Checklist 54
Table 31. Class I Areas within 300 KM of the BP Facility 57
Table 32. Maximum Criteria Pollutant Concentrations Predicted by CALPUFF 58
Table 33. Predicted Class I Area Deposition Fluxes Compared to NPS DAT 59
Table 34. Predicted Class I Area Visibility Results..... 59

1. EXECUTIVE SUMMARY

BP West Coast Products LLC operates a refinery in Blaine, Washington, referred to as the BP Cherry Point Refinery. The BP Cherry Point Refinery (refinery) produces petroleum based fuels.

This Prevention of Significant Deterioration (PSD) project referred to as the BP Two Coker Heaters – Replacement project (or project), which allows BP to install two new coker heaters and related equipment at their Blaine, Washington, facility. Coker heaters are used in the production of petroleum products such as fuel for vehicles. The original coker heaters were installed as part of the original facility in 1970, and are not as efficient as the new two new coker heaters.

The coker heater replacement project will make the following changes to the refinery:

- Install two coker heaters with improvied process cleaning capability.
- Change the equipment used to separate various portions of the coker products.
- Install a compressor and pump to upgrade the coker from its 1970 design.

All of these changes meet air quality regulations as part of this PSD permit.

The Washington State Department of Ecology (Ecology) received the PSD application fee on August 27, 2014, and the initial application on September 30, 2014. Ecology determined the application to be incomplete on October 22, 2014. BP submitted a revised PSD permit application in March 2016, with supplementary materials after that date. The application was determined to be complete on April 28, 2016. BP provided a consolidated application (including supplementary materials) on June 23, 2016, and provided other supplemental information on November 4, 2016.

2. INTRODUCTION

2.1. The Permitting Process

2.1.1. The PSD process

PSD permitting requirements in Washington State are established in Title 40, Code of Federal Regulations (CFR) 52.21; Washington Administrative Code (WAC) 173-400-700 through 750. Washington State implements its PSD program as a State Implementation Plan (SIP) approved program. This SIP approved program became effective May 29, 2015.[1]

Federal and state rules require PSD review of all new or modified air pollution sources that meet certain criteria in an attainment or unclassifiable area with the National Ambient Air Quality Standards (NAAQS). The objective of the PSD program is to prevent significant adverse

[1] 80 FR 23721, April 29, 2015.

environmental impact from emissions into the atmosphere by a proposed new major source, or major modification to an existing major source. The program limits degradation of air quality to that which is not considered "significant."

Under WAC 173-400-720 through 750, a project proposed at an existing major stationary source is subject to PSD review if the project either is a "major modification" to an existing "major stationary source," or is a major stationary source unto itself.

To be considered a major modification, the following three project aspects are considered: physical or operational changes resulting from the project, project emissions compared with significant emission rates (SER), and significant net emission increases (and/or decreases).

Unless a physical change or change in the method of operation of a major stationary source is exempted by applicable regulation 40 CFR 52.21(b)(2)(iii)(a through k), it is a major modification if the change results in both a significant emissions increase and a significant net emissions increase at the source. "Significant emissions increase" means that the emissions increase for any regulated PSD pollutant is greater than the PSD SER threshold for that regulated pollutant.

This project will have physical or operational change consistent with the definition of "major modification" in 40 CFR 52.21(b)(2)(i). In addition, estimated project emissions are above the PSD SER thresholds both before and after considering significant net emission increases and/or decreases associated with the project for each of the following pollutants: combined emissions of nitrogen oxide and nitrogen dioxide (NO_X), carbon monoxide (CO), sulfur dioxide (SO_2), sulfuric acid mist (H_2SO_4), particulate matter (PM), PM less than 10 microns (PM_{10}), PM less than 2.5 microns ($PM_{2.5}$), volatile organic compounds (VOCs), and greenhouse gases (CO_{2e}).

PSD rules are designed to keep an area with "good" air in compliance with the NAAQS. The distinctive requirements of PSD are Best Available Control Technology (BACT), air quality analysis (allowable increments and comparison with the NAAQS), and analysis of impacts of the project on visibility, vegetation, and soils.

PSD rules require the utilization of BACT for certain new or modified emission units, which is the most effective air pollution control equipment and procedures that are determined to be available after considering environmental, economic, and energy factors.

A full technical review of the project for these pollutants, including a (BACT) analysis, and the project's effect on the NAAQS, PSD increments, visibility, soils and vegetation, is required and included in this Technical Support Document (TSD).

The emissions of other air pollutants not subjected to PSD review are covered in the Northwest Clean Air Agency's (NWCAA) Notice of Construction (NOC) approval for this project

A summary of project component descriptions is provided in Section 2.2.2., with a more detailed PSD review process description for this project provided in Section 3. BACT information for this project is included in Section 4. An ambient impact anlysis is presented in Section 5 and an additional growth impact analysis is presented in Section 6. These sections form the basis of the permit approval conditions.

2.1.2. The NOC process

This project is subject to NOC permitting requirements under state of Washington regulations Chapters 173-400 and 173-460 (and/or local air regulations where applicable). NWCAA is the permitting authority for air pollutants not included in PSD permitting. This includes the New Source Review (NSR) permitting of criteria pollutants that are not PSD-applicable, air toxics issues under federal maximum achievable control technology (MACT) and state 173-460 WAC, and Title V permitting requirements. The procedure for issuing an NOC permit was established in Chapter 70.94 RCW.

WAC 173-400-110 outlines the NSR procedures for permitting criteria pollutants. These procedures are further refined in WAC 173-400-113 (requirements for new sources located in attainment or unclassifiable areas) and/or local air requirmeents where applicable). WAC 173-460-040 NSR supplements the requirements contained in Chapter 173-400 WAC (and/or local air requirmeents where applicable) by adding additional requirements for sources of toxic air pollutants (TAPs).

2.2. Site and Project Description

2.2.1. Site description

The BP Cherry Point Refinery is located in the city of Blaine in Whatcom County, Washington (see Figure 1). BP is situated in Sections 7 and 8, Township 39N, Range 1E Willamette Meridian. An aerial photograph is included as Figure 2. The proposed project will not increase the current footprint acreage of the site.

The BP facility is located in a Class II area that is designated as “attainment or unclassifiable” for the purpose of PSD permitting for all pollutants.

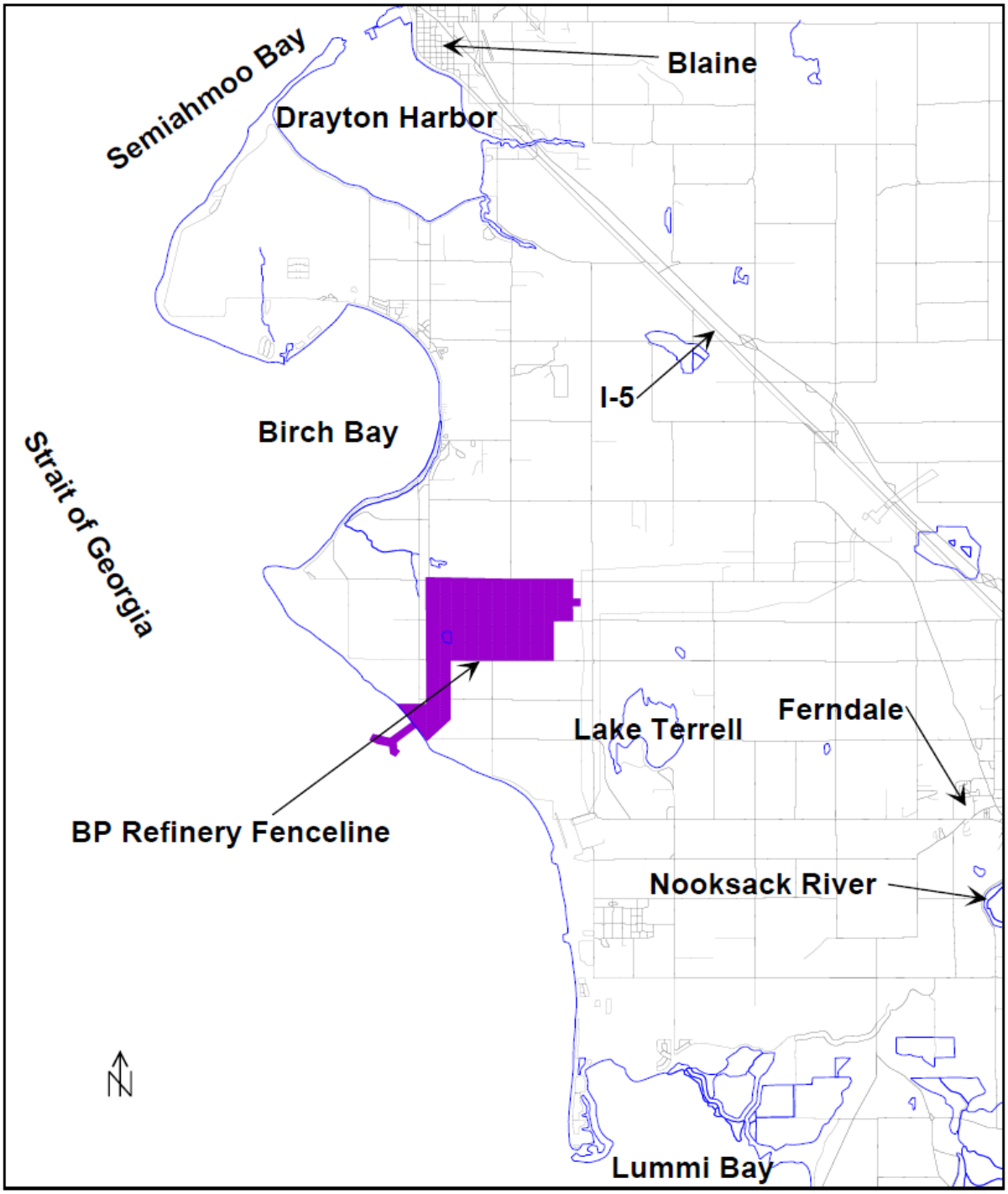

Figure 1. The BP Cherry Point Refinery facility location map

(Source: BP Cherry Point Refinery Coker Heater Replacement Project application, prepared by Ramboll Environ, received 3/28/2016)

Figure 2. The BP Cherry Point Refinery aerial photograph

(Source: BP Cherry Point Refinery Coker Heater Replacement Project application, prepared by Ramboll Environ, received 3/28/2016)

2.2.2. Project description

BP West Coast Products LLC owns and operates the BP Cherry Point Refinery. The refinery produces petroleum based fuels. This PSD project referred to as the BP Coker Heaters – Replacement project (or project), will make the following changes to the refinery:

- Replace the two existing coker heaters, installed as part of the original facility in 1970, with two new coker heaters equipped with spalling (online cleaning capability).
- Install a lean oil absorption system in the coker off gas system.
- Install a compressor as part of the new lean oil absorption system.
- Install bypasses of existing heat exchangers in crude preheat system.

Changes not triggering NSR include:

- Replace the boiler feedwater circulation pump for the coker heaters.
- Change the main fractionator accumulator for additional sour water generation associated with online spalling capability.

Construction on this project is expected to begin sometime in 2017, and the new units are expected to start operating during the third quarter of 2019.

According to BP's application for this project, the project will result in a 22 percent increase in annual coker unit utilization. Collectively, the online coker heater cleaning capability and new heat exhangers bypasses in the cude prehat sytem could conservatively increase annual crude

utilization by four percent. This project is expected to cause increased annual utilization for the following units and processes at the refinery:

- Cooling towers
- Coke drum venting, cutting and draining emissions
- Green coke handling activities
- Calciners
- All facility unit heaters
- Catalyst replacement
- Flaring

The following figure from the application shows a simplified coker process. A more detailed description of the project components is provided in the following subsections.

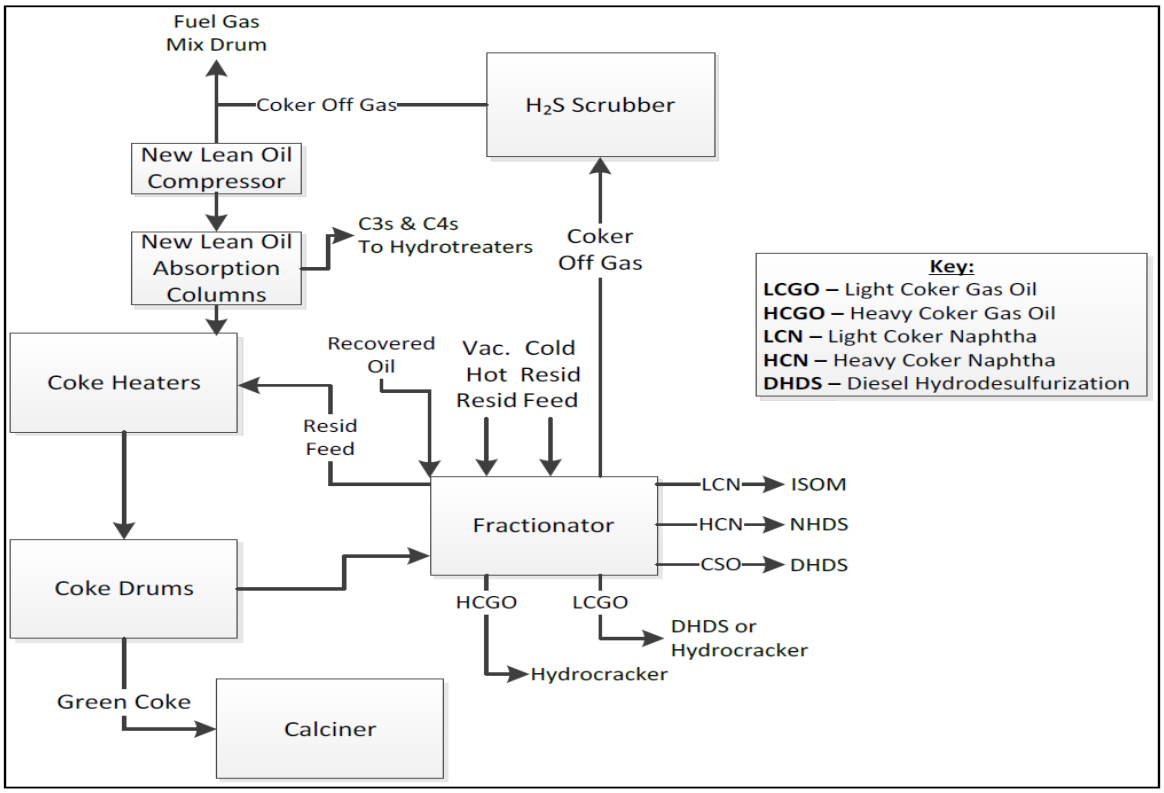

Figure 3. Simplified coker diagram

(Source: BP Cherry Point Refinery Coker Heater Replacement Project application, prepared by Ramboll Environ, received 3/28/2016)

2.2.2.1. Coker heaters

The following excerpts from the BP PSD application prepared by Ramboll Environ describe the new coker heaters:
"The new coker heaters will each have burners rated at 303 MMBtu/hr heat release higher heating value (HHV). The increase in heat availability at the coker heaters will allow the residual oil to be transferred from the crude unit to the coker unit at lower temperatures (less than 700F°). There are no modifications to the crude unit heater. To achieve the lower temps, BP plans to use an existing cooling box to transfer heat from the residual oil to the refinery cooling towers. Piping changes and a new pump will be made to the existing cooling box as part of the Project. BP does not expect any increase in short-term crude processing rate as a result of the Project.

"The new heaters will be a balanced draft design with overall heat efficiency (absorbed duty divided by fired duty) near 90 percent. The heater efficiency will be obtained through use of a heat recovery system to preheat combustion air and generate 25,000 pounds of steam per hour from each heater. Steam generated by the heat recovery system will be added to the refinery 140 pound steam header.

"The new heaters will primarily operate in balanced draft mode (forced draft and induced draft fans); however, they will have the option to operate in natural draft mode (i.e. without the air preheater) under certain operating conditions. Operating in natural draft mode lowers the heater efficiency and constrains coker unit throughput. BP does not plan to operate the heaters in natural draft mode during normal operations, but BP also recognizes the need for operational flexibility if an air preheater (balanced draft) needs to be taken offline. BP will typically operate in balanced draft mode in order to utilize the air preheater and maximize the heater efficiency.

"Each new coker heater will also have online cleaning capability (spalling) to reduce the time for periodic offline heater cleaning (decoking). During spalling two of the six passes of the coker heater tubes will be taken out of service (one cell at a time) and approximately 8,500 pounds of steam per hour will be introduced into each of the out of service passes. By adjusting the temperature of the tubes and flowing high rates of steam through the tubes coke deposits are dislodged from the tubes and transported to the active coke drum by the steam.

"The existing coker heaters require offline cleaning 2 to 3 times per year. Shutting down one of the heaters for a decoke event results in flare emissions and historically has required BP to reduce the Crude Unit processing rate until the coker heater decoke is complete. The coker heaters online cleaning capability will reduce flaring emissions and allow BP to conservatively process up to 1.4 percent more crude oil per year (2.9 thousand barrels per day [kbpd], annual average) compared to past actual throughput. BP estimates that a current coker heater decoke lasts approximately 10 days and crude rate is decreased by approximately 35 kbpd during a decoke (350 kb per decoke). BP has based the increase in annual crude throughput on the assumption of going from three decokes per year (current actual) down to zero decokes per year (projected actual), which results in 2.9 kbpd increase in crude utilization for future years regardless of the crude slate.

"Each new coker heater will be designed with a Safety Instrumented System (SIS) consisting of sensors, control valves, and software that takes the heaters to a safe state in the event of unsafe conditions. These additional components are included in the fugitive emission calculations for the new heaters."

2.2.2.2. Lean oil absorption system with compressor

The following excerpts from the BP PSD application prepared by Ramboll Environ describe the new lean oil absorption system and compressor:

"BP proposes to install a new compressor with a lean oil absorption system to recover C3 (i.e. propanes) and C4 (i.e. butanes) hydrocarbons. These hydrocarbons will be processed by the light ends unit to become a saleable product. The lean oil absorption system is designed to process approximately 44 percent of the coker off gas generated. A benefit of the lean oil absorption system is additional sulfur removal (39 percent annual average) from the coker off gas that will be used as fuel in the new coker heaters.

"The lean oil absorption system included with this Project reduces SO_2 emissions from the coker heaters during normal operations by recovering hydrocarbons (including mercaptans) from the coker off gas for additional downstream processing into products. BP as a company only has one operational lean oil absorption system recovering products from coker off gas.

"Lean oil absorption technology is based on recovering liquids from the off gas. Higher molecular weight sulfur compounds (i.e. mercaptans) will be recovered with liquids in the coker off gas. Low molecular weight sulfur compounds will not be recovered in the lean oil system and will be burned as coker off gas in the coker heaters. The residual feed to the coker unit is the primary source of low molecular weight sulfur compounds, and the coking process will also generate some additional low molecular weight compounds."

2.2.2.3. Main fractionator overhead accumulator

The following excerpts from the BP PSD application prepared by Ramboll Environ describe the changes to the main fractionator overhead accumulator:

"The overhead accumulator separates overhead vapor, distillate, and sour water from the main fractionator tower in the coker unit. Online coker heater cleaning will result in additional water vapor directed to the overhead accumulator, which requires BP to increase the size of the overhead accumulator.

There are no atmospheric emissions from the overhead accumulator during normal operation. Increasing the overhead accumulator size to accommodate additional steam from coker heater cleaning will not increase the likelihood of an upset or a malfunction event occurring within the delayed coker at the refinery."

According to BP, the only direct emissions from the main fractionator overhead accumulator are accounted for with BP's leak detection and repair program (LDAR).

2.2.2.4. Boiler feed water circulation pump

The following excerpts from the BP PSD application prepared by Ramboll Environ describe the replacement boiler feed water circulation pump:

"BP proposes to replace the boiler feed water circulation pump to recover heat from the coker unit. The circulation pump has no effect on coker unit emissions."

3. PSD APPLICABILITY REVIEW

3.1. Overview and Permitting History

As noted in Section 2.2.1, the proposed project will require a PSD permit because both the project's emissions increase and the net contemporaneous emissions increase caused by the project exceed PSD SERs for NSR pollutants, including greenhouse gases (GHGs). This section describes how that determination was performed.

The proposed project at BP require a PSD review. In accordance with the requirements of 40 CFR 52.21(a)(2), these emission increases associated with the new and existing units is based on their potential to emit (PTE) and baseline actual emissions.

After determininting in Section 2.1.1. that there are no physical and operational changes of this project exempted by 40 CFR 52.21(b)(2)(iii)(a through k), (Step 1), the significant emissions increase analysis looks only at the emissions from the proposed project and is referred to here as Step 2. The significant net emissions increase analysis looks at additional increases and decreases from "contemporaneous" projects at the source and is referred to here as Step 3.

For the significant emissions increase analysis, the review involves both new emissions units and modification of existing units. The PSD regulations require use of the hybrid test for projects that involve both the addition of new emissions units and the modification of existing emissions units (40 CFR 52.21(a)(2)(iv)(f)). Under the hybrid test, a significant emissions increase of a regulated NSR pollutant is projected to occur if the sum of the emissions increases for each emissions unit, using the actual-to-projected-actual applicability test (40 CFR 52.21(a)(2)(iv)(c) for modified units and the actual-to-potential applicability test (40 CFR 52.21(a)(2)(iv)(d)) for new units, equals or exceeds the significance threshold for that pollutant as defined in paragraph 40 CFR 52.21(b)(23).

The actual-to-projected-actual applicability test involves adding the projected actual emissions from existing emissions units that are modified as part of the project or that are otherwise expected to experience an emission increase as a result of the project, and then subtracting the past actual emissions (called the "baseline actual emissions") from those units.

In lieu of projecting future actual emissions for a particular existing emissions unit, an applicant can choose instead to use the unit's PTE as the unit's post project emissions (40 CFR 52.21(b)(41)(ii)(d)). The actual-to-potential test, which is required for all new units being constructed as part of the project, involves totaling the potential emissions of the proposed new emissions units, then subtracting past actual emissions of those units. A new unit that is being constructed as part of the project has a baseline of zero (40 CFR 52.21(b)(48)(iii)).

If the project would result in a significant emissions increase, then a significant net emissions increase analysis is often conducted. However, EPA has clearly stated that calculating a net emissions increase is at the source's option (see, for example, 67, Federal Register 80186, at 80197 [December 31, 2002]). Therefore, a source may seek a PSD permit based on a calculated significant emission increase alone. For the Coker project, which is an existing major source for PSD, BP found that emissions for nine (9) regulated NSR pollutants were considered to have significant emissions increases. BP also performed a netting analysis (see sections 3.3.1 and 3.3.2) and found that the same nine pollutants had significant net emissions increases also.

The BP Coker project therefore triggers PSD review for the nine regulated NSR pollutants.

3.2. Significant Emissions Increases Calculations

The project will involve both modifying existing emission units and constructing new emission units. Therefore, the hybrid test, described in the previous section, is required. Test results for both new and modified units are presented in this section followed by a summary hybrid test table.

3.2.1. Actual-to-potential test for new coker heaters and components

The calculations for new coker heater emissions were based on the BACT limit emission rates listed in Section 4.2.3.3, and the following parameters:

- Maximum heater burner capacity: 303.00 MMBtu/hr
- Hours of operation: 8760 hr/yr
- Hours of startup/shutdown/standby: 504 hr/yr
- F Factor for refinery fuel gas: 8,381 dscf/MMBtu
- Exhaust gas volume flow: 43,323 dscfm at zero percent O_2

The results of the new cokers heater and component emissions are listed in Table 1.

Table 1. Emissions Increases of Regulated NSR Pollutants for New Coker Heaters (tpy)*

Emission Unit	CO	NO_X	PM†	PM_{10}	$PM_{2.5}$	SO_2	H_2SO_4	VOC	CO_2e	H_2S	Pb
Coker heaters	90.9	159.3	6.6	26.5	26.5	131.9	10.6	14.3	320,883	0.03	0.0013

Table 1. Emissions Increases of Regulated NSR Pollutants for New Coker Heaters (tpy)*											
Emission Unit	CO	NO_X	PM†	PM_{10}	$PM_{2.5}$	SO_2	H_2SO_4	VOC	CO_2e	H_2S	Pb
Coker heater component fugitives‡	§	§	§	§	§	§	§	1.1	5.5	0.1	§

∗ Amounts of other PSD regulated pollutants (TRS, reduced sulfur compounds, and municipal waste-related pollutants) are estimated to be zero or negligible.

† Filterable.

‡ Includes crude pre-heat components emission estimates.

§ Zero, negligible, or not applicable.

3.2.2. Actual-to-projected-actual applicability test for modified and debottlenecked emissions units

Debottlenecking is the term used for situations when emission units upstream or downstream from the unit(s) undergoing a physical change or change in the method of operation will experience an emission increase as result of the project. Additional emissions from units with increased utilization are calculated using an actual-to-projected-actual applicability test.

As described in Section 3.1, the actual-to-projected-actual applicability test involves adding the projected actual emissions from existing emissions that are expected to experience an emission increase as a result of the project, and then subtracting the past actual emissions (called the "baseline actual emissions") from those units.

When calculating projected actual emissions, 40 CFR 52.21(b)(41)(ii)(c) requires that BP "Shall exclude, in calculating any increase in emissions that results from the particular project, that portion of the unit's emissions following the project that an existing unit could have accommodated during the consecutive 24-month period used to establish the baseline actual emissions under paragraph (b)(48) of this section and that are also unrelated to the particular project, including any increased utilization due to product demand growth…" These emissions are referred to in this TSD as "excludables."

For existing emission units that are being modified or debottlenecked as part of the project, the PSD baseline emissions are emissions averaged over a 24 consecutive month period. According to 40 CFR 52.21(b)(48)(ii), the 24-month period must occur "within the 10-year period immediately preceding either the date the owner or operator begins actual construction of the project, or the date a complete permit application is received."

For a regulated NSR pollutant, when a project involves more than one emission unit, only one 24 consecutive month period may be used to determine the baseline actual emissions for all emission units being changed. However, a different 24 consecutive month period can be used for each regulated NSR pollutant (40 CFR 52.21(b)(48)(ii)(d)).

For baseline emissions, BP chose the following 24-month periods for the pollutant.

Table 2. BP's Chosen Dates for Baseline Actual Emissions	
24-Month Period	**Pollutant(s)**
2008-2009	SO_2
2010-2011	CO, PM, PM_{10}, $PM_{2.5}$, CO_{2e}, and lead
2011-2012	NOx
2012-2013	VOC and H_2S
2013-2014	H_2SO_4

Because BP's application was considered complete on April 28, 2016, BP's chosen 24-month periods are all within the required 10-year window. Ecology performed a thorough review of BP's chosen baseline actual emission (BAE) dates for comparison to Ecology emission inventory data. Ecology found discrepancies and asked BP to provide reasons from PSD guidance to justify the discrepancies. According to 40 CFR 52.21(b)(21)(ii), "The Administrator shall allow the use of a different time period upon a determination that it is more representative of normal source operation." In Table 3, BP provided the following justifications for adjustments to baseline emissions.

Table 3. Documentation of BP's Defense of Adjustments to BAE				
Pollutant (24-mo period chosen for baseline)	**Emission Unit**	**Actual Emissions Inventory Values: (Years: emissions)**	**Emissions Used in Application (Years: emissions)**	**Justification for not using emission inventory values and/or the chosen emission inventory years**
SO_2 (2008/2009)	Crude Shipping Unloading	Not Applicable	2011: 264 tpy 2012: 254 tpy	See Section 2.5.13 (Crude Unloading), page 19 of the air permit application. Emissions from the vessel are considered secondary because they occur when a vessel is docked at the refinery. Secondary emissions are not accounted for in PSD applicability calculations (40 CFR 52.21(b)(4)), but they must be evaluated as part of the air quality impacts analysis (40 CFR 52.21(k)).
NOx (2011/2012)	1st Frac Reboiler	2011: 137 tpy 2012: 125 tpy	2011: 21 tpy 2012: 19 tpy	PSD regulations 40 CFR 52.21(b)(48)(ii) defines baseline actual emissions as "the average rate, in tons per year, at which the emissions unit actually emitted the pollutant." And subsection (c) "requires the baseline actual emissions to be adjusted downward to account for an emission limit that the source must currently comply." Based on the reasons below, BP has adjusted the "actual" 2011/12 emissions from the 1st Frac Reboiler.

Table 3. Documentation of BP's Defense of Adjustments to BAE				
Pollutant (24-mo period chosen for baseline)	**Emission Unit**	**Actual Emissions Inventory Values: (Years: emissions)**	**Emissions Used in Application (Years: emissions)**	**Justification for not using emission inventory values and/or the chosen emission inventory years**
				According to the application footnote b on page C-13, NO_X baseline actual emissions are now based on past actual fuel use, projected actual heat input requirements, and emission limit from permit OAC #1067a. Section 3.2.5 of the application states that "BP adjusted the baseline actual emissions for this heater as if the emission unit was required to comply with the current 0.04 lb/MMBtu NO_X emission limit." This is the limit referred to in the cited PSD regulation section (c), and which was implemented during the 2011-2012 timeframe as explained in section 3.2.5.
	Hydrocracker R4 Heater	2011: 20 tpy 2012: 16 tpy	2011: 29 tpy 2012: 24 tpy	PSD regulations 40 CFR 52.21(b)(48)(ii) defines baseline actual emissions as "the average rate, in tons per year, at which the emissions unit actually emitted the pollutant." Based on the reasons below BP has learned that the listed emissions more accurately reflected the "actual" 2012/12 emissions from the R4 heater compared to the values BP reported in the 2011/12 inventory According to the application footnote on page C-13 for the R4 Heater, NO_X baseline actual emissions are now based on past actual fuel use and engineering estimate emission factor. Section 3.2.5 states that "engineering test data for the heater are more accurate." BP has used handheld analyzers in the past to estimate emission concentrations which are better emissions estimation compared to a general AP-42 emission factor.

Table 3. Documentation of BP's Defense of Adjustments to BAE				
Pollutant (24-mo period chosen for baseline)	**Emission Unit**	**Actual Emissions Inventory Values: (Years: emissions)**	**Emissions Used in Application (Years: emissions)**	**Justification for not using emission inventory values and/or the chosen emission inventory years**
	North Vacuum Heater	2011: 41 tpy 2012: 36 tpy	2011: 37.6 tpy (41.0 tpy) 2012: 33.8 tpy (36.1 tpy)	PSD regulations 40 CFR 52.21(b)(48)(ii) defines baseline actual emissions as "the average rate, in tons per year, at which the emissions unit actually emitted the pollutant." The 2011 and 2012 emissions inventories were based on calendar year emission testing. In the application, 2013 source test data was inadvertently used to re-calculate 2011 and 2012 actual emissions. The application under-estimated baseline NO_X emissions by 2.8 tpy. The project is PSD major for NO_X and re-adjusting the baseline NO_X emissions does not change the determination. In addition, adjusting the baseline NO_X emissions in the application would result in the project emission increase changing from 4.8 tpy to 2.0 tpy. Therefore, the emissions impacts evaluated in the application are overestimated and no change will be made to the application.
$PM_{10}/PM_{2.5}$ (2010/2011)	Crude Heater	2010: 16 tpy 2011: 13 tpy	2010: 22 tpy 2011: 28 tpy	PSD regulations 40 CFR 52.21(b)(48)(ii) defines baseline actual emissions as "the average rate, in tons per year, at which the emissions unit actually emitted the pollutant." Based on the reasons below, BP has learned that the listed emissions data more accurately reflected the "actual" 2010/11 emissions from the crude heater compared to the values BP reported in the 2010/11 inventory. Past actual emission inventory $PM_{10}/PM_{2.5}$ emissions were based on AP-42 Section 1.4 (natural gas combustion) emission factors. BP recently conducted PM source testing for two refinery fuel gas-fired heaters (#2 DHDS Charge Heater & #3 DHDS Charge Heater). Emission factors derived from the refinery source tests are more representative of refinery fuel gas composition than the AP-42 emission

Table 3. Documentation of BP's Defense of Adjustments to BAE				
Pollutant (24-mo period chosen for baseline)	**Emission Unit**	**Actual Emissions Inventory Values: (Years: emissions)**	**Emissions Used in Application (Years: emissions)**	**Justification for not using emission inventory values and/or the chosen emission inventory years**
				factors for natural gas combustion. The $PM_{10}/PM_{2.5}$ emission factors in the application were updated to reflect the average of the two BP source tests (0.0085 lb/MMBtu), representing refinery fuel gas composition instead of natural gas composition.
	No. 1 Reformer	2010: 8 tpy 2011: 7 tpy	2010: 22 tpy 2011: 18 tpy	PSD regulations 40 CFR 52.21(b)(48)(ii) defines baseline actual emissions as "the average rate, in tons per year, at which the emissions unit actually emitted the pollutant." Based on the reasons below, BP has learned that the listed emissions data more accurately reflected the "actual" 2010/11 emissions from the No.1 reformer compared to the values BP reported in the 2010/11 inventory. Past actual emission inventory $PM_{10}/PM_{2.5}$ emissions were based on AP-42 Section 1.4 (natural gas combustion) emission factors. BP recently conducted PM source testing for two refinery fuel gas-fired heaters (#2 DHDS Charge Heater & #3 DHDS Charge Heater). Emission factors derived from the refinery source tests are more representative of refinery fuel gas composition than the AP-42 emission factors for natural gas combustion. The $PM_{10}/PM_{2.5}$ emission factors in the

Table 3. Documentation of BP's Defense of Adjustments to BAE				
Pollutant (24-mo period chosen for baseline)	**Emission Unit**	**Actual Emissions Inventory Values: (Years: emissions)**	**Emissions Used in Application (Years: emissions)**	**Justification for not using emission inventory values and/or the chosen emission inventory years**
				application were updated to reflect the average of the two BP source tests (0.0085 lb/MMBtu), representing refinery fuel gas composition instead of natural gas composition.
	No. 1 H2 Plant (north/ south)	2010: 8/8 tpy 2011: 7/8 tpy	2010: 22 tpy 2011: 21 tpy	PSD regulations 40 CFR 52.21(b)(48)(ii) defines baseline actual emissions as "the average rate, in tons per year, at which the emissions unit actually emitted the pollutant." Based on the reasons below, BP has learned that the listed emissions data more accurately reflected the "actual" 2010/11 emissions from the No.1 H2 plant compared to the values BP reported in the 2010/11 inventory. Past actual emission inventory $PM_{10}/PM_{2.5}$ emissions were based on AP-42 Section 1.4 (natural gas combustion) emission factors. BP recently conducted PM source testing for two refinery fuel gas-fired heaters (#2 DHDS Charge Heater & #3 DHDS Charge Heater). Emission factors derived from the refinery source tests are more representative of refinery fuel gas composition than the AP-42 emission factors for natural gas combustion. The

Table 3. Documentation of BP's Defense of Adjustments to BAE				
Pollutant (24-mo period chosen for baseline)	**Emission Unit**	**Actual Emissions Inventory Values: (Years: emissions)**	**Emissions Used in Application (Years: emissions)**	**Justification for not using emission inventory values and/or the chosen emission inventory years**
				PM_{10}/$PM_{2.5}$ emission factors in the application were updated to reflect the average of the two BP source tests (0.0085 lb/MMBtu), representing refinery fuel gas composition instead of natural gas composition.
H_2SO_4 (2013/2014)	Calciners 1&2	2013: 7.1 tpy 2014: 14.5 tpy	2013: 4.2 tpy 2014: 23.2 tpy	PSD regulations 40 CFR 52.21(b)(48)(ii) defines baseline actual emissions as "the average rate, in tons per year, at which the emissions unit actually emitted the pollutant." Based on the reasons below, BP has calculated annual "actual" 2013/14 emissions from the calciners slightly different from than the values BP reported in the 2013/14 inventory. From Section 3.2.3 of the application, baseline emissions "are based on annual calciner utilization and emission factors developed from source tests." BP tested the two calciner stacks for H_2SO_4 emissions in July 2013 and July 2014. The same source test data were used to develop the reported emissions inventories and baseline emissions presented in the application. The reported emissions inventories were based on monthly
	Calciners 3	2013: 8.6 tpy 2014: 18.6 tpy	2013: 13.5 tpy 2014: 22.8 tpy	
	Calciners Total	2013: 21.6 tpy 2014: 33.1 tpy	2013: 17.7 tpy 2014: 46.0 tpy	
	Calciners 2013/2014 Avg	27.5 tpy	31.8 tpy	

Table 3. Documentation of BP's Defense of Adjustments to BAE				
Pollutant (24-mo period chosen for baseline)	**Emission Unit**	**Actual Emissions Inventory Values: (Years: emissions)**	**Emissions Used in Application (Years: emissions)**	**Justification for not using emission inventory values and/or the chosen emission inventory years**
				emissions with the most current emission factor from an emission test (i.e. calciner operations before the July 2014 source test were based on the July 2013 emission data). The application was based on yearly throughput and the emission test during from the calendar year. The difference between the two calculation methodologies is approximately 4.3 tpy. The project triggers PSD review for H_2SO_4 regardless of the baseline calculation method for the calciners, and the application contains a BACT analysis for H2SO4 emissions. Washington's air toxic rule requires an evaluation of daily H_2SO_4 emission increases from the project; however, the project will not increase daily H_2SO_4 emissions from the calciners. No change to the application will be made.
H_2S (2012/2013)	Coke Drum venting	2012: 3 tpy	2012: 9 tpy	PSD regulations 40 CFR 52.21(b)(48)(ii) defines baseline actual emissions as "the average rate, in tons per year, at which the emissions unit <u>actually</u> emitted the pollutant." Based on the latest coke drum venting emission information as explained in detail in section 3.2.1* of the application, BP has learned that the listed emissions data more accurately reflected the "actual" 2012/13 emissions from coke drum venting compared to the values BP reported in the 2012/13 inventory. *According to section 3.2.1 of the application, "Data used to develop the emission calculations were obtained from EPA-requested source tests conducted at multiple refineries, including the BP-Husky refinery in Toledo….Emissions for 2005 – 2008 were estimated from 2013 actual emissions based on the annual average coker throughput in these years compared to throughput during 2013."

Table 3. Documentation of BP's Defense of Adjustments to BAE				
Pollutant (24-mo period chosen for baseline)	**Emission Unit**	**Actual Emissions Inventory Values: (Years: emissions)**	**Emissions Used in Application (Years: emissions)**	**Justification for not using emission inventory values and/or the chosen emission inventory years**
VOC (2012/2013)	Crude Heater	2012: 8 tpy 2013: 11 tpy	2012: 10 tpy 2013: 13 tpy	PSD regulations 40 CFR 52.21(b)(48)(ii) defines baseline actual emissions as "the average rate, in tons per year, at which the emissions unit actually emitted the pollutant." Based on the reasons below, BP has learned that the listed emissions data more accurately reflected the "actual" 2010/11 emissions from the crude heater compared to the values BP reported in the 2010/11 inventory. As described in section 3.2.7 of the application, "BP updated the baseline actual VOC emissions using the normalized AP-42 natural gas emission factor of 0.0054 lb/MMBtu and annual refinery fuel gas and vacuum tail gas heat inputs to the crude heater. Normalizing the AP-42 natural gas emission factors to an energy input basis is an improved emission calculation approach and is recommended in the AP-42 documentation."

3.2.2.1. Coke drum venting actual-to-projected-actual applicability test

Table 4 presents BP's estimated emissions for coke drum venting.

Table 4. Emissions Increases of Regulated NSR Pollutants for Coke Drum Venting (tpy)

Emissions	CO	NO_X	PM	PM_{10}	$PM_{2.5}$	SO_2	H_2SO_4	VOC	CO_2e	H_2S	Pb
BAE	1.0	*	3.2	3.2	3.2	*	*	14.1	1724	7.8	*
Excludables	0.0	*	2.6	2.6	2.6	*	*	0.9	46.4	2.6	*
Projected emissions	2.1	*	10.6	10.6	10.6	*	*	29.1	3664	14.4	*
Change in emissions	1.1	*	4.9	4.9	4.9	*	*	14.2	1893	4.0	*

* Zero, negligible, or not applicable.

3.2.2.2. Green coke handling actual-to-projected-actual applicability test venting

Table 5 presents BP's estimated emissions for green coke handling.

Table 5. Emissions Increases of Regulated NSR Pollutants for Green Coke Handling (tpy)

Emissions	CO	NO_X	PM	PM_{10}	$PM_{2.5}$	SO_2	H_2SO_4	VOC	CO_2e	H_2S	Pb
BAE	*	*	18.0	17.9	17.9	*	*	*	*	*	*
Excludables	*	*	*	*	*	*	*	*	*	*	*
Projected emissions	*	*	21.5	19.2	18.1	*	*	*	*	*	*
Change in emissions	*	*	3.5	1.2	0.2	*	*	*	*	*	*

* Zero, negligible, or not applicable.

3.2.2.3. Calciners actual-to-projected-actual applicability test

Table 6 presents BP's estimated emissions for calciners.

Table 6. Emissions Increases of Regulated NSR Pollutants for Calciners (tpy)

Emissions	CO	NO_X	PM	PM_{10}	$PM_{2.5}$	SO_2	H_2SO_4	VOC	CO_2e	H_2S	Pb
BAE	11.4	533.4	15.3	15.3	15.3	198.4	31.8	1.1	1,084,051	*	0.04
Excludables	3.4	280	6.7	6.7	6.7	41.3	12.4	0.5	318,563	*	0.01
Projected emissions	17.5	956.1	25.9	25.9	25.9	359.1	75.9	1.9	1,586,480	*	0.05
Change in emissions	2.7	142.7	3.9	3.9	3.9	119.3	31.8	0.2	183,866	*	0.01

* Zero, negligible, or not applicable.

3.2.2.4. Hydrocracker actual-to-projected-actual applicability test

Table 7 presents BP's estimated emissions for the hydrocracker.

Table 7. Emissions Increases of Regulated NSR Pollutants for Hydrocracker (tpy)

Emission Unit	CO	NO_X	PM	PM_{10}	$PM_{2.5}$	SO_2	H_2SO_4	VOC	CO_2e	H_2S	Pb
R10 Heater											
BAE	11.3	6.1	0.6	2.4	2.4	11.9	0.4	1.1	34,174	*	*
Excludables	3.1	4.5	0.2	0.7	0.7	2.9	0.1	0.8	9,319	*	*
Projected emissions	23.7	21.5	1.1	4.5	4.5	16.8	0.7	2.9	63,904	*	*
Change in emissions	9.2	10.8	0.4	1.4	1.4	2.0	0.2	0.9	20,411	*	*
1st Stage Fractionator Reboiler											
BAE	20.9	21.4	1.1	4.4	4.4	15.4	0.7	2.9	62,920	*	*
Excludables	-3.4	5.4	0.2	0.8	0.8	8.8	0.1	0.3	10,662	*	*
Projected emissions	34.7	34.7	1.8	7.4	7.4	27.4	1.1	4.7	104,550	*	*
Change in emissions	17.2	7.8	0.5	2.2	2.2	3.3	0.3	1.4	30,969	*	*
R4 Heater											
BAE	8.2	26.2	0.4	1.7	1.7	6.8	0.3	1.1	24,617	*	*
Excludables	1.8	8.6	0.1	0.4	0.4	3.2	0.0	0.2	5,363	*	*
Projected emissions	10.5	36.8	0.6	2.2	2.2	8.3	0.3	1.4	31,714	*	*
Change in emissions	0.6	2.0	0.0	10.1	0.1	0.0	0.0	0.1	1,734	*	*
2nd Stage Fractionator Reboiler											
BAE	29.2	36.6	1.6	6.2	6.2	24.3	0.9	3.3	88,099	*	*
Excludables	1.4	9.2	0.1	0.3	0.3	6.4	0.1	0.8	4,258	*	*
Projected emissions	32.1	56.2	1.7	6.8	6.8	25.4	1.1	4.3	96,939	*	*
Change in emissions	1.5	10.5	0.1	0.3	0.3	0.0	0.1	0.2	4,582	*	*
Hydrocracker Totals											
Change in emissions	28.5	31.1	1.0	4.1	4.1	5.3	0.9	2.6	87,296	*	*

* Zero, negligible, or not applicable.

3.2.2.5. Sulfur plant actual-to-projected-actual applicability test

Table 8 presents BP's estimated emissions for the sulfur plant.

Table 8. Emissions Increases of Regulated NSR Pollutants for the Sulfur Plant (tpy)

Emissions	CO	NO_X	PM	PM_{10}	$PM_{2.5}$	SO_2	H_2SO_4	VOC	CO_2e	H_2S	Pb
BAE	152.5	15.9	0.5	2.1	2.1	67.0	2.7	1.2	71,883	0.5	*
Excludables	*	*	*	*	*	*	*	*	*	*	*
Projected emissions	204.0	25.0	0.7	2.7	2.7	99.0	4.0	1.5	95,103	0.6	*
Change in emissions	51.4	9.0	0.2	0.7	0.7	32.0	1.3	0.3	23,220	0.1	*

* Zero, negligible, or not applicable.

3.2.2.6. Crude heater actual-to-projected-actual applicability test

Table 9 presents BP's estimated emissions for the crude heater.

Table 9. Emissions Increases of Regulated NSR Pollutants for the Crude Heater (tpy)

Emissions	CO	NO_X	PM	PM_{10}	$PM_{2.5}$	SO_2	H_2SO_4	VOC	CO_2e	H_2S	Pb
BAE	33.7	365.2	4.9	19.7	19.7	172.5	2.9	11.5	280,415	*	*
Excludables	3.2	104.9	0.5	1.9	1.9	12.8	0.2	2.2	26,993	*	*
Projected emissions	38.3	487.8	5.6	22.5	22.5	192.3	3.2	14.2	318,994	*	*
Change in emissions	1.4	17.7	0.2	0.8	0.8	7.0	0.1	0.5	11,587	*	*

* Zero, negligible, or not applicable.

3.2.2.7. North vacuum heater actual-to-projected-actual applicability test

Table 10 presents BP's estimated emissions for the north vacuum heater.

Table 10. Emissions Increases of Regulated NSR Pollutants for the Crude Heater (tpy)

Emissions	CO	NO_X	PM	PM_{10}	$PM_{2.5}$	SO_2	H_2SO_4	VOC	CO_2e	H_2S	Pb
BAE	22.8	35.7	0.6	2.4	2.4	11.3	0.3	1.3	33,382	*	*
Excludables	3.1	13.9	0.1	0.3	0.3	1.1	0.1	0.4	4,601	*	*
Projected emissions	26.9	54.4	0.7	2.8	2.8	10.3	0.4	1.8	39,414	*	*
Change in emissions	1.0	4.8	0.0	0.1	0.1	0.0	0.0	0.1	1,432	*	*

* Zero, negligible, or not applicable.

3.2.2.8. South vacuum heater actual-to-projected-actual applicability test

Table 11 presents BP's estimated emissions for the south vacuum heater.

Table 11. Emissions Increases of Regulated NSR Pollutants for the South Vacuum Heater (tpy)

Emissions	CO	NO_X	PM*	PM_{10}	$PM_{2.5}$	SO_2	H_2SO_4	VOC	CO_2e	H_2S	Pb
BAE	0.9	29.3	1.5	6.1	6.1	28.4	0.8	3.4	86,001	†	†
Excludables	0.1	4.4	0.2	0.6	0.6	2.4	0.1	0.9	9,047	†	†
Projected emissions	1.0	44.3	1.7	6.9	6.9	25.9	1.0	4.4	98,630	†	†
Change in emissions	0.0	10.6	0.1	0.3	0.3	0.0	0.0	0.2	3,583	†	†

∗ Slight variations in emissons changes are due to roundoff error.
† Zero, negligible, or not applicable.

3.2.2.9. #1 and #2 reformer heaters actual-to-projected-actual applicability test

Table 12 presents the BPs estimated emissions for the #1 and #2 reformer heaters.

Table 12. Emissions Increases of Regulated NSR Pollutants for the #1 and #2 Reformer Heaters (tpy)

Emissions	CO	NO_X	PM	PM_{10}	$PM_{2.5}$	SO_2	H_2SO_4	VOC	CO_2e	H_2S	Pb
BAE	0.9	287	5.9	23.5	3.5	111	3.0	4.8	333,920	∗	∗
Excludables	0.2	67.8	0.6	2.5	2.5	7.3	0.6	1.0	35,695	∗	∗
Projected emissions	1.1	369	6.8	7.0	7.0	101	3.8	6.0	83,547	∗	∗
Change in emissions	0.0	13.4	0.2	1.0	1.0	0.0	0.1	0.2	3,932	∗	∗

∗ Zero, negligible, or not applicable.

3.2.2.10. Naphtha heaters actual-to-projected-actual applicability test

Table 13 presents BP's estimated emissions for the naphtha heaters.

Table 13. Emissions Increases of Regulated NSR Pollutants for Naphtha Heaters (tpy)

Emissions	CO	NO_X	PM	PM_{10}	$PM_{2.5}$	SO_2	H_2SO_4	VOC	CO_2e	H_2S	Pb
BAE	29.6	31.3	0.8	3.1	3.1	13.9	0.5	2.0	43,341	∗	∗
Excludables	8.8	14.3	0.2	0.9	0.9	4.1	0.0	0.5	12,842	∗	∗
Projected emissions	46.9	55.8	1.2	4.8	4.8	18.0	0.7	3.1	68,730	∗	∗
Change in emissions	8.6	10.2	0.2	0.9	0.9	0.0	0.1	0.6	12,547	∗	∗

∗ Zero, negligible, or not applicable.

3.2.2.11. #1 hydrogen plan actual-to-projected-actual applicability test

Table 14 presents BP's estimated emissions for the #1 hydrogen plant.

Table 14. Emissions Increases of Regulated NSR Pollutants for the Hydrogen Plant (tpy)

Emissions	CO	NO_X	PM	PM_{10}	$PM_{2.5}$	SO_2	H_2SO_4	VOC	CO_2e	H_2S	Pb
BAE	207.1	223.0	5.3	21.4	21.4	93.3	1.3	8.3	716,428	*	*
Excludables	3.4	27.6	0.1	0.4	0.4	8.5	1.8	5.5	11,712	*	*
Projected emissions	218.5	260.1	5.6	22.6	22.6	84.0	3.2	14.3	745,571	*	*
Change in emissions	7.9	9.4	0.2	0.8	0.8	0.0	0.1	0.5	17,432	*	*

* Zero, negligible, or not applicable.

3.2.2.12. #1 DHDS reboiler actual-to-projected-actual applicability test

Table 15 presents BP's estimated emissions for the #1 DHDS reboiler.

Table 15. Emissions Increases of Regulated NSR Pollutants for the #1 DHDS Reboiler (tpy)

Emissions	CO	NO_X	PM	PM_{10}	$PM_{2.5}$	SO_2	H_2SO_4	VOC	CO_2e	H_2S	Pb
BAE	0.3	4.4	0.4	1.5	1.5	6.6	0.2	0.8	21,090	*	*
Excludables	0.0	0.7	0.0	0.1	0.1	0.7	0.0	0.1	776	*	*
Projected emissions	0.4	6.1	0.5	1.9	1.9	7.0	0.3	1.2	26,749	*	*
Change in emissions	0.1	1.1	0.1	0.3	0.3	0.0	0.1	0.2	4,883	*	*

* Zero, negligible, or not applicable.

3.2.2.13. ISOM actual-to-projected-actual applicability test

Table 16 presents BP's estimated emissions for the ISOM.

Table 16. Emissions Increases of Regulated NSR Pollutants for the ISOM (tpy)

Emissions	CO	NO_X	PM	PM_{10}	$PM_{2.5}$	SO_2	H_2SO_4	VOC	CO_2e	H_2S	Pb
BAE	0.1	0.2	*	0.1	0.1	0.4	*	0.1	1,222	*	*
Excludables	0.1	0.2	*	0.1	0.1	0.2	*	0.0	653	*	*
Projected emissions	0.2	0.6	*	0.2	0.2	0.6	*	0.1	2,294	*	*
Change in emissions	0.0	0.3	*	0.0	0.0	0.0	*	0.0	419	*	*

* Zero, negligible, or not applicable.

3.2.2.14. Additional affected units actual-to-projected-actual applicability test

Table 17 presents BP's estimated emissions for additional affected units.

Table 17. Emissions Increases of Regulated for Additional Affected Units* (tpy)

Emissions	CO	NO_X	PM	PM_{10}	$PM_{2.5}$	SO_2	H_2SO_4	VOC	CO_2e	H_2S	Pb
BAE	3.2	34.5	13.3	2.9	0.8	0.0	†	204.1	5290	2.5	†
Excludables	7.5	15.5	0.6	0.6	0.6	0.0	†	79.6	4900	0.0	†
Projected emissions	12.2	52.2	33.8	6.8	1.5	0.2	†	297.0	10578	2.7	†
Change in emissions	1.5	2.1	19.9	3.3	0.1	0.2	†	13.3	388	0.2	†

∗ Additional units include emission increases (projected actual emissions minus BAE) for HP Flare, #1 & #2 cooling towers, wastewater treatment, storage tanks, and product loadout (truck, rail, and marine).

† Zero, negligible, or not applicable.

3.2.3. Hybrid test - significant emissions increase analysis summary

The total emission increases relating to the project is the sum of the increases from the existing units (projected actual minus BAE) and the PTE from the newly constructed units and is presented in Table 18. The federal rule defines an SER to be equal to or exceeding any of the SERs listed in Table 17 (40 CFR 52.21(b)(23)).

In addition to regulated NSR pollutants, GHGs are subject to regulation as of January 2, 2011. EPA's PSD rule under 40 CFR 52.21(b)(49)(iv) states that "beginning January 2, 2011, the pollutant GHGs is subject to regulation if:

(a) The stationary source is a new major stationary source for a regulated NSR pollutant that is not GHGs, and also will emit or will have the potential to emit 75,000 tpy CO_{2e} or more; or

(b) The stationary source is an existing major stationary source for a regulated NSR pollutant that is not GHGs, and also will have an emissions increase of a regulated NSR pollutant, and an emissions increase of 75,000 tpy CO_{2e} or more."

BP is an existing major stationary source for at least one regulated NSR pollutant that is not GHGs. In fact the proposed project is expected to result in a significant increase of eight (8) other NSR regulated pollutants. Therefore, because the project will result in an emissions increase of 75,000 tpy of CO_2e, the GHG emissions from the project are also subject to PSD review and are included in Table 18.

Table 18. Total Estimated Project Emissions, Net Emissions, and SERs			
Pollutant	**Project Estimated Emissions**	**SER (tpy)**	**Emissions Greater Than SERs (Yes/No)**
NO_X	412	40	Yes
CO	195	100	Yes
SO_2	296	40	Yes
PM	41	25	Yes
PM_{10}	49	15	Yes
$PM_{2.5}$	45	10	Yes
VOCs	48	40	Yes
Lead (Pb)	0.008	0.6	No
H_2SO_4	45	7	Yes
Hydrogen Sulfide (H_2S)	4.4	10	No
CO_2e (GHGs)	683,367	75,000	Yes
Fluorides	Negligible	3	No
Total reduced sulfur (TRS)	Negligible	10	No
Reduced sulfur compounds	Negligible	10	No
Municipal waste combustor/ landfill emissions	*	†	No
Reduced sulfur compounds	Negligible	10	No
* The project does not involve municipal waste. † See 40 CFR 52.21(b)(23).			

3.3 Significant Net Emissions Increase Calculations

The steps necessary to calculate the net emission increase are outlined in 40 CFR 52.21(b)(3)(i). When a netting analysis is performed, only the pollutants that have significant emission increases need to go through the analysis.

3.3.1. Netting rules

According to 40 CFR 52.21(b)(3)(i), a net emissions increase means, with respect to any regulated NSR pollutant emitted by a major stationary source, the amount by which the sum of the following exceeds zero: the increase in emissions from a particular physical change or change in the method of operation at a stationary source; and any other increases and decreases in actual emissions at the major stationary source that are contemporaneous with the particular change and are otherwise creditable.

An increase or decrease in actual emissions is contemporaneous with the increase from the particular change only if it occurs between the date five years before construction on the particular change commences; and the date that the increase from the particular change occurs.

For the BP project, construction and operation of the new coker heaters is expected to occur between 2017 and 1st quarter 2019 with a commissioning period through the 3rd quarter 2019. Therefore, the contemporaneous period for the BP project extends from 2012 through the 3rd quarter 2019.

An increase or decrease in actual emissions is creditable only if: the reviewing authority has not relied on it in issuing a permit, which is in effect when the increase in actual emissions from the particular change occurs; and the increase or decrease in emissions did not occur at a Clean Unit (with some exceptions).

It also includes increase or decrease in fugitive emissions (to the extent quantifiable), for an emissions unit that is part of one of the major source categories.

An increase or decrease in actual emissions of sulfur dioxide, particulate matter, or nitrogen oxides that occurs before the applicable minor source baseline date is creditable only if it is required to be considered in calculating the amount of maximum allowable increases remaining available.

An increase in actual emissions is creditable only to the extent that the new level of actual emissions exceeds the old level.

A decrease in actual emissions is creditable only to the extent that the old level of actual emissions or the old level of allowable emissions, whichever is lower, exceeds the new level of actual emissions. It must also be enforceable as a practical matter at and after the time that actual construction on the particular change begins. It must also have approximately the same qualitative significance for public health and welfare as that attributed to the increase from the particular change.

An increase that results from a physical change at a source occurs when the emissions unit on which construction occurred becomes operational and begins to emit a particular pollutant. Any replacement unit that requires shakedown becomes operational only after a reasonable shakedown period, not to exceed 180 days.

3.3.2. Netting analysis

Table 19 presents BP's estimated netting analysis changes in emissions, with specific project notes from the application included for each applicable project.

Table 19. Netting Analysis Changes in Emissions (tpy)

Change in Emissions	CO	NO_X	PM	PM_{10}	$PM_{2.5}$	SO_2	H_2SO_4	VOC	CO_2e
Removal of existing coker heaters	-10.7	-88.4	-6.5	-6.5	-6.5	-85.4	-6.9	-4.7	-123,222
Rail logistics project[(a)]	(b)	(b)	(b)	(b)	(b)	(b)	(b)	4.5	(b)

Table 19. Netting Analysis Changes in Emissions (tpy)									
Change in Emissions	**CO**	**NO_X**	**PM**	**PM_{10}**	**$PM_{2.5}$**	**SO_2**	**H_2SO_4**	**VOC**	**CO_2e**
Naphtha Reliability Project[c]	(b)	(b)	(b)	(b)	(b)	(b)	(b)	0.1	(b)
#3 Calciner Convection Section[d]	0.3	7.8	0.2	0.2	0.2	0.4	0.4	0.0	2,851
Hydrocracker ARV Project[e]	(b)	(b)	(b)	(b)	(b)	(b)	(b)	0.1	(b)
Clean Fuels Project[f]	31.3	22.4	6.5	(f)	23.4	10.0	0.4	30.3	534,796
1st Stage Fract. Reboiler Retrofit[g]	(b)	-87.7	(b)	(b)	(b)	(b)	(b)	(b)	(b)
Net Emission Changes	20.9	-145.9	0.2	-6.3	17.1	-75	-6.1	30.3	414,425

(a) NWCAA issued OAC #1142 for the Rail Logistics Project on January 22, 2013. BP started operation of the equipment in December 2013.
(b) Zero, negligible, or not applicable.
(c) NWCAA issued OAC #1141 for the Naphtha Reliability Project on April 22, 2013. BP has not started operation of the proposed modification.
(d) BP received a PSD exemption letter for the #3 Calciner Heat Section Repair Project on September 18, 2013.
(e) NWCAA issued OAC #1122 for the Hydrocracker ARV Project on Aril 9, 2012. BP installed the new components in May 2012.
(f) NWCAA issued OAC #1064 for the Clean Fuels Project on November 29, 2010. Ecology issued PSD-10-01 for PM_{10} emissions from the project on December 13, 2010. BP started operation of the new equipment (#2 Hydrogen Plant and Flare and #3 DHDS Unit) in March 2013. Sulfur Plant and Hydrocracker heater emission increases projected in the Clean Fuels project are excluded from the contemporaneous netting because the same projected increases are already included in the emission calculations for the Project.
(g) NWCAA issued OAC #1067 for the burner retrofit on the Hydrocracker 1st Stage Fractionator Reboiler on November 29, 2010 (Rev. A on July 29, 2011). Startup of the new burner occurred in May 2012.

3.3.3. Significant net emissions increase analysis summary

Estimated project net emissions, and SERs for each of these pollutant are shown in Table 20.

Table 20. Total Estimated Project Net Emissions and SERs

Pollutant	Net Emissions (tpy)	SER (tpy)	Net Emissions Greater than SERs (Yes/No)
NO_X	266	40	Yes
CO	216	100	Yes
SO_2	221	40	Yes
PM	41	25	Yes
PM_{10}	43	15	Yes
$PM_{2.5}$	62	10	Yes
VOCs	79	40	Yes
H_2SO_4	39	7	Yes
CO_2e (GHGs)	1,097,792	75,000	Yes

After netting, BP's Coker Replacement Project triggers PSD for the nine (9) pollutants listed in Table 20. It should also be noted that BP included another project (the Sulfur Plant Modification Project or SPMP) in its air quality impact assessment for the Coker Project. BP determined that both the coker heater replacement project and the SPMP assume full annual utilization of the sulfur plant and, therefore, did not include SPMP contemporaneous emission increases/decreases as part of this project. Ecology performed a PSD applicability determination for the SPMP on February 12, 2015, and determined that it was not subject to PSD review.

4. BACT

4.1. Definitions and Policy Concerning BACT

All new major sources or major modifications are required to utilize BACT for those new and modified emission units that will experience an increase in emissions as a result of the project. BACT is defined as an emissions limitation based on the maximum degree of reduction for each pollutant subject to regulation, emitted from any proposed major stationary source or major modification, on a case-by-case basis, taking into account cost-effectiveness, economic, energy, environmental, and other impacts (40 CFR 52.21(b)(12)).

Federal guidance requires each PSD permit applicant to implement a "top-down" BACT analysis process for each new or physically or operationally changed emissions unit. Ecology has

adopted the top-down BACT process for its BACT determinations. This top-down BACT analysis process consists of five basic steps described below:[2]

Step 1. Identify all available control technologies with practical potential for application to the specific emission unit for the regulated pollutant under evaluation.

Step 2. Eliminate all technically infeasible control technologies.

Step 3. Rank remaining control technologies by control effectiveness and tabulate a control hierarchy.

Step 4. Evaluate most effective controls and document results.

Step 5. Select BACT, which will be the most effective practical option not rejected, based on economic, environmental, and/or energy impacts.

If the applicant proposes to implement the most effective or "top" available control strategy, Step 4 is not necessary.

As shown above, the "top-down" BACT process starts by considering all available emission control technologies, and ranks them for further evaluation from most effective to least effective technically available control technology. The most effective emission reduction technology is then evaluated for economic feasibility. If the technology is proven infeasible based on economics, energy, or other environmental considerations, then the next most stringent level of reduction is considered. The most stringent level of emissions control that is not determined to be technically and economically infeasible is selected as BACT. While the permitting agency makes the final BACT decision, the burden is on the applicant to prove why the most stringent level of control should not be used.

BP provided a 5-step top-down BACT analysis for the project, which was fully evaluated by Ecology and presented in the following subsections.

4.2. BACT Analysis for Coker Heaters

The permit provides limits for the new coker heaters to operate in either natural draft mode (no preheaters) or balanced draft mode (forced draft and induced draft fans). However, to maximize heater efficiency, the heaters will operate primarily in balanced draft mode. Startup/shutdown and standby modes are addressed in this section also.

[2] See EPA's *Draft New Source Review Workshop Manual*, 1990; and PSD and Title V Permitting Guidance for Greenhouse Gases <http://www.epa.gov/nsr/ghgdocs/ghgpermittingguidance.pdf>.

4.2.1. BACT analysis for coker heaters

The EPA RACT/BACT/LAER Clearinghouse (RBLC), recent petroleum refinery BACT determinations, BP BART information, and other emission reduction information sources were reviewed to provide the following list of available control options. While these options have been identified as available, they are not necessarily feasible (technically, economically, or otherwise). The available technologies as reviewed in the application and by Ecology are:

4.2.1.1. Dry electrostatic precipitator

An electrostatic precipitator (ESP) removes particles from an air stream by electrically charging the particles, then passing them through a force field that causes them to migrate to an oppositely charged collector plate. An ESP generally refers to a dry ESP unless specifically noted otherwise. The dust from the collector plates falls into a collection hopper at the bottom of the ESP. The collection efficiency of an ESP depends on particle diameter, electrical field strength, gas flowrate, and plate dimensions. A dry ESP is used for dry pollutants and uses a dry collecting surface.

4.2.1.2. Wet electrostatic precipitator

Wet electrostatic precipitator (WESP) control technology is identical to a dry ESP except that a wet ESP has a wet collecting surface and can be used for both wet and dry pollutants. The water addition can perform a number of tasks. It can change the electrical properties of the fly ash and can improve (or reduce) removal efficiency. The water is also used to remove sticky ashes from the ESP collector plants or to condense and remove semi-volatile compounds like some high molecular weight organic compounds. Unlike a dry ESP which removes only dry pollutants, a wet ESP can potentially remove solid, liquid, and soluble gas pollutants.

4.2.1.3. Good combustion practices

The formation of NOx can be minimized by proper operation and design practices. Operators can control the combustion stoichiometry to minimize NO_X formation while achieving efficient fuel combustion. This is the most basic combustion modification technique available.

4.2.1.4. Low excess air

Low excess air (LEA) is a technique where combustion is optimized by reducing the excess air introduced to the unit to the minimum amount necessary for stable, efficient combustion. Excess air is the air supplied in addition to the quantity required for stoichiometric combustion.

4.2.1.5. Staged combustion[3]

Staged combustion technologies such as over-fire air (OFA) reduce NO_X emissions by creating a fuel-rich zone via air staging (diverting a portion of the total amount of air required through separate ports). The highest temperatures are reached in the primary zone, generating thermal NO_X. "The general concept is to burn the fuel with an insufficient amount of air in a primary combustion zone. With insufficient oxygen available for complete combustion, most of the O_2 is consumed by carbon and hydrogen, leaving less available to form NO_X. As a result the fuel nitrogen combines to form N_2 ($N+N=N_2$). During the few hundredths of a second it takes for combustion to occur, the flame cools slightly. Once this cooling has occurred, the rest of the air is added to complete combustion. Since the fuel nitrogen radicals have disappeared, and the flame is too cool to generate a lot of thermal NO_X, relatively little NO_X will be formed in the secondary combustion zone." To determine which ports to divert air to, can be a trial and error process unique to each boiler. A successful setup will be accompanied by a smoky unclean looking fire, not a clear blue flame which operators sometimes misguidedly try to obtain.

4.2.1.6. Flue gas recirculation

Flue gas recirculation (FGR) reduces peak flame temperature by recirculating a portion of the flue gas back into the combustion zone as a replacement for combustion air. The recirculated gasses have a lower oxygen content that reduces the peak flame temperature in the combustion zone.

4.2.1.7. Fuel staging/combustion

Fuel Staging is also known as "reburning" or "off-stoichiometric combustion." Fuel staging is a technique where 10 to 20 percent of the total fuel input is diverted to a second combustion zone downstream of the primary zone. Again, this is a technique to reduce the peak flame temperature during combustion

4.2.1.8. Water/steam injection

Water/steam injection into the main flame can reduce the flame temperature and the generation of NO_X. It is an older technique most often used on older burner designs in natural gas and oil-fired boilers and gas turbines. If the flame temperature is sufficiently quenched, the generation of CO can increase and the process efficiency will decrease.

4.2.1.9. Selective catalytic reduction

Selective catalytic reduction (SCR) is an exhaust gas treatment process in which a NH_3 or urea reagent is injected into the exhaust gas upstream of a catalyst bed for exhaust temperatures between 450° and 750°F. In the SCR process, the urea or NH_3 injected into the exhaust is first

[3] Source: *NOx Emissions Control From Stationary Sources. APTI Course 418,* Reorganized 2012 by Brian W. Doyle, PhD, PE, presented February 26-28, 2013, Boise, ID, Department of Environmental Quality.

stored in a liquid storage tank and vaporized before injection. The exhaust/ammonia mixture then passes over the catalyst. The function of the catalyst is to lower the activation energy of the NO decomposition reaction, therefore, lowering the temperature necessary to carry out the reaction. On the catalyst surface, NH_3 and nitric oxide (NO) or nitrogen dioxide (NO_2) reacts to form diatomic nitrogen (N_2) and water. When operated within the optimum temperature range, the reaction can result in removal efficiencies between 70 and 90 percent. The rate of NO_X removal increases with temperature up to a maximum removal rate at a temperature between 700° and 750°F. As the temperature increases above the optimum temperature, or decreases below the optimum range for a conventional vanadium pentoxide catalyst, the NO_X removal efficiency begins to decrease. Depending on the temperatures involved, low temperature and higher temperature catalyst formulations are available. The effectiveness of an SCR system depends upon the same factors as the SNCR system and the condition of the catalyst. The catalyst can degrade over time due to poisoning, fouling, thermal stress, and erosion by particulates, reducing NO_X removal efficiency.

4.2.1.10. Selective non-catalytic reduction

Selective non-catalytic reduction (SNCR) is an exhaust gas treatment process in which urea or ammonia is injected into the exhaust gas. High temperatures, normally between 1,600° and 1,900°F (or up to 2,200 according to BP), promote the reaction between urea or ammonia (NH_3) and NO_X to form N_2 and water. The effectiveness of SNCR systems depends upon inlet NO_X concentration, temperature, mixing, residence time, reagent-to-NO_X ratio, and fuel sulfur content.

4.2.1.11. Non-selective catalytic reduction[4]

This technology uses a catalyst without a reagent and requires zero excess air. The catalyst causes NO_X to give up its oxygen to products of incomplete combustion (PICs), CO, and hydrocarbons, causing the pollutants to destroy each other. However, if oxygen is present, the PICs will burn up without destroying the NO_X.

4.2.1.12. Oxidation/reduction scrubbing

Several proprietary oxidation/reduction (O/R) scrubbing NO_X removal processes are commercially available. The basic elements of a typical process include cooling of the combustion gas stream below its dew point to condense water, treat with ozone or sodium chlorite to oxidize NO_X and SO_2 to their highest oxidized forms, then absorb these oxides as acids in a scrubber. It has been reported that O/R scrubbing has a theoretical NO_X removal efficiency of 95 percent.

[4] Source: *NOx Emissions Control From Stationary Sources, APTI Course 418,* Reorganized 2012 by Brian W. Doyle, PhD, PE, presented February 26-28, 2013, Boise, ID, Department of Environmental Quality.

4.2.1.13. Oxidation catalyst

Catalytic oxidation does not rely on the introduction of additional chemical reagents to promote the desired reactions. The activation energy required for the oxidation reaction between O_2, CO, and VOCs to proceed is reduced in the presence of a catalyst. Products of combustion are introduced into a catalytic bed, with the optimum temperature range for these systems being between 700°F and 1,100°F. The catalyst oxidizes CO to CO_2, and VOCs to CO_2 and H_2O, but it also can promote other, less desirable, oxidation reactions such as NH_3 to NO_X and SO_2 to SO_3. Consequently, the presence of an oxidation catalyst can cause emissions of other pollutants to increase, and therefore its design needs to be carefully considered.

4.2.1.14. LNBs

LNBs modify the initial combustion conditions to reduce the peak flame temperature, and thereby reduce NO_X formation. They are often used in conjunction with modifications to overfire air systems, where a portion of combustion occurs through ports above or "over" the burners to complete combustion of other gases such as CO. They are most useful when using fuels like natural gas or distillate oil. A pilot flame is used to maintain combustion stability in this fuel-lean environment. LNBs that feature an FGR system integrated into the burner design, which further minimizes flame temperatures and oxygen availability, are often referred to as ultra-low NO_X burners (ULNBs).

4.2.1.15. Flue gas desulfurization

In flue gas desulfurization (FGD) with a wet scrubber, a solution of sodium or calcium hydroxide absorbs SO_2 from the flue gas forming sodium or calcium sulfite. The collected sulfite can be further oxidized to sulfate or left as the sulfite. Typical systems using sodium regenerate the sodium or re-use, while calcium based systems dispose of the calcium sulfate/sulfite.

4.2.1.16. Wet scrubber

Wet scrubbers intercept dust particles using droplets of liquid (usually water). The larger, particle-enclosing water droplets are separated from the remaining droplets by gravity. The solid particulates are then separated from the water.

4.2.1.17. NO_X adsorbers

NO_X adsorbing technologies (some of which are known as SCONOx or EMx^{GT}) use a catalytic reactor method similar to SCR. SNONOx uses a regenerated catalytic bed with two materials, a precious metal oxidizing catalyst (such as platinum) and potassium carbonate. The platinum oxidizes the NO into NO_2, which can be adsorbed onto the potassium carbonate. It may require a catalyst wash every 90 days. The GT on EMx^{GT} indicates gas turbine application.

4.2.1.18. Fabric filter (baghouse)

A fabric filter (baghouse) consists of several fabric filters, typically configured in long, vertically suspended sock-like configurations. Dirty gas enters from one side, often from the outside of the bag, passing through the filter media and forming a particulate cake. The cake is removed by shaking or pulsing the fabric, which loosens the cake from the filter, allowing it to fall into a bin at the bottom of the baghouse. A variety of fabrics is available to cover fuel gas temperatures up to about 650°F. Baghouses are unsuitable for use on water saturated gas streams.

4.2.1.19. Cyclone separator

Cyclone separators remove solids from the air stream by application of centrifugal force. In solid fuel combustion devices like hog fuel boilers, they are commonly used to remove large particles prior to the flue gas entering smaller particle control devices such as baghouses or ESPs. Multi-cyclones are capable of effectively removing particles down to approximately three micrometers.[5]

4.2.1.20. Settling chambers

Similar to cyclone separators, settling chambers are used to remove large particles prior to the flue gas entering smaller particle control devices. However, whereas cyclone separators use centrifugal force, settling chambers use gravitational force and are limited to removal of particles larger than about 40-60 micrometers.[5]

4.2.1.21. Low-sulfur fuel/fuel gas conditioning

This technique seeks to limit the quantity of sulfur introduced to the combustion system. Unlike the formation of NO_X, which can be mitigated through combustion controls, the potential for SO_2 emissions is entirely dependent upon the quantity of sulfur present in the fuel. Sulfur compounds in fuel readily oxidize at combustion temperatures to form SO_2 (as well as some SO_3). Minimizing the sulfur content of the fuel combusted, either by selecting a fuel that naturally contains little sulfur, or one that has been processed to remove sulfur, is a popular method for reducing SO_2 emissions. In addition, sulfur in fuel has been shown to contribute to fine particulate emissions. Therefore, controlling or minimizing the sulfur content of the fuel will also minimize PM emissions.

4.2.1.22. Low-carbon fuel

According to the application: this includes combusting low-carbon fuels such as natural gas, RFG, and coker off gas. The lean oil absorption system will remove C3 and C4 hydrocarbons from the coker off gas prior to combustion in the coker heaters. RFG which is a mixture of light (C1 to C4) hydrocarbons. Other gases that are not condensed in the various distillation processes at the refinery, among them the cokers, which produce coker off gas. Carbon content of RFG

[5] EPA APTI Course 413, 5th Ed, Version 2: *Control of Particulate Matter Emissions Student Manual*., Crowder., J.W., Smith., T., pp. 5-1, 6-24.

and coker off gas varies with the type of crude processed at the refinery; combustion of refinery process gases typically results in greater CO_2 emissions per unit of heat input than natural gas (composed of primarily methane). Nevertheless, as referenced in the application, "RFG and coker off gas are considered low carbon fuels when compared to other common fuels."[6]

4.2.1.23. Energy-efficient design and good combustion practices

These include: preheating combustion air with flue gases; heat recovery to produce 25,000 lb of 140 pound-per-square-inch (psi) steam per hour per heater; using burners with the most efficient design available, excess air monitoring and control (balanced-draft design), maintaining and operating burners as recommended by the manufacturer

4.2.1.24. Carbon capture and storage

Carbon Capture and Storage or Sequestration (CCS) technology includes three stages: removing or segregating CO_2 from the gas stream; compressing and transporting the CO_2; and permanently storing the CO_2.

4.2.2. BACT feasibility review

Table 21 addresses the technical feasibility of implementing each control technology from Section 4.2.1. for the project.

Table 21. Initial Technical Feasibility Assessment

Emission Unit(s)	Control	Technical Feasibility Assessment	Applicable Pollutants
Coker heaters	GCPs	Technically Feasible GCPs are considered a baseline control alternative.	CO, VOC, PM
Coker heaters	Wet scrubber (for SO_2)	Technically Feasible	SO_2
Coker heaters	Oxidation catalysts	Technically Feasible	CO, VOC
Coker heaters	LNBs	Technically Feasible	NO_X
Coker heaters	SCR	Technically Feasible	NO_X
Coker heaters	Low-sulfur fuel [caustic treatment with regeneration (i.e., gas-phase Merox)]	Technically Feasible	SO_2
Coker heaters	Low-sulfur fuel (cryogenic recovery of liquids)	Technically Feasible	SO_2

[6] From 40 CFR Part 98, Subpart C, Table C-1 (all expressed in kg CO_2/MMBtu): Natural Gas – 53.06, Fuel Gas – 59.00, Propane Gas – 61.46, No. 2 Fuel Oil – 73.96, Bituminous Coal – 93.28.

Table 21. Initial Technical Feasibility Assessment			
Emission Unit(s)	**Control**	**Technical Feasibility Assessment**	**Applicable Pollutants**
Coker heaters	Low-carbon fuel	Technically Feasible	GHG
Coker heaters	Energy-efficient design and GCPs for GHG	Technically Feasible	GHG
Coker heaters	CCS	Technically Feasible	GHG
Coker heaters	Low-sulfur fuel (caustic treatment without regeneration)	Technically Infeasible: Caustic treatment without regeneration is not technically feasible because it would require significant upgrades to the wastewater treatment plant in order to treat the new caustic treatment stream that would be generated by this type of treatment.	SO_2
Coker heaters	Low-sulfur fuel (PraxAir catalytic conversion)	Technically Infeasible: PraxAir catalytic conversion technology is only available at the laboratory scale and has not been proven on a full scale setup.	SO_2
Coker heaters	SNCR	Technically Infeasible: As noted in the application, use of an SNCR could potentially cause NO_X emissions to increase if exhaust temperatures drop below the required SNCR temperature requirements.	NO_X
Coker heaters	NSCR	Technically Infeasible: Exhaust from the proposed replacement coker heaters will not be the low-oxygen, fuel-rich exhaust stream that an NSCR system requires. In addition, there is no evidence that such a system has ever been employed to reduce emissions from an external gaseous combustion device. At one time, the technology was used to reduce process (not combustion) NO_X emissions from adipic and nitric acid plants, but it has fallen out of favor for economic reasons. NSCR is currently used in some cases to reduce NO_X emissions from reciprocating internal combustion engines, which can run under stoichiometric or fuel-rich conditions.	NO_X
Coker heaters	NOx Adsorbers (SCONOx, EMx^{GT})	Technically Infeasible: The EMx technology has been demonstrated on a few emissions units such as combustion turbines, but has not been demonstrated for a large refinery process heater that combusts coker off gas or RFG. The technical differences between the few emission units to which EMx has been demonstrated in practice, and the proposed replacement coker heaters result in a (BP) determination that EMx is technically infeasible for reducing emissions from the proposed replacement coker heaters, and is	NO_X

Table 21. Initial Technical Feasibility Assessment			
Emission Unit(s)	**Control**	**Technical Feasibility Assessment**	**Applicable Pollutants**
		removed from consideration as BACT. Ecology agrees with this determination.	
Coker heaters	Oxidation temperature minimization	Technically Infeasible: The techniques intended to reduce NO_X emissions by reducing oxidation temperatures in the combustion zone, are listed in Section 4.2.1 as FGR, staged combustion, fuel staging combustion, LEA, OFA, and water/steam injection. The coker heaters will heat a stream of residual oil to greater than 900°F as it is delivered to the coke drums to begin the coking process. Control alternatives that result in cooler flame temperatures compromise the ability of the heater to quickly heat the residual oil to the temperature at which long-chain hydrocarbon molecules become unstable and begin breaking apart (i.e., the coking process begins). Effective and timely heating to the required temperature ensures that the residual oil will be delivered to the coke drum before the coking reactions begin, which reduces the need for cleaning operations.	NO_X
Coker heaters	Cyclone separator	Technically Infeasible: Combustion processes produce PM as unburned solid carbon (soot), unburned vapors or gases that subsequently condense, and the unburnable portion of the fuel (ash). Because gaseous fuels contain little or no ash, and a burner operated with GCPs combusting gaseous fuels typically does not generate much soot, the majority of the PM resulting from combusting gaseous fuel is condensed unburnt fuel or combustion products. Past BP source tests indicates the filterable and condensable portions of particulate in RFG-fired heaters and boilers are 25 percent and 75 percent, respectively. A cyclone would only be capable of capturing the filterable portion. According to BPs application for this project, filterable particulate in gaseous combustion source exhaust is typically less than one micron in size.	PM
Coker heaters	Dry ESP and WESP	Technically Infeasible: The low particulate concentration from gaseous fuel combustion would not allow significant charge buildup on the particles, resulting in poor migration to the collecting plates. In addition, 75 percent of the particulate emissions from gaseous fuel combustion is in vapor form (condensable) at stack conditions and ESP are generally not designed to collect vapors.	PM

Table 21. Initial Technical Feasibility Assessment			
Emission Unit(s)	**Control**	**Technical Feasibility Assessment**	**Applicable Pollutants**
Coker heaters	Fabric filter	Technically Infeasible: Past BP source tests indicates the filterable and condensable portions of particulate in RFG fired heaters and boilers are 25 percent and 75 percent, respectively. As a result, the majority of the PM will not be collected by a fabric filter. Also, due to the low particulate concentration, a cake will be slow to form (assuming one forms at all), resulting in poor collection efficiency. To capture the compounds that will become condensable PM, the gas stream would need to be cooled before reaching the baghouse. However, cooling would result in condensation of acids, and subsequent corrosion of the filter media and baghouse structure.	PM
Coker heaters	Wet scrubber (for PM)	Technically Infeasible: Wet collection depends on the inertia of the PM in the flue gas to impact the scrubbing liquid and be collected. However, the fine particulate generated by gaseous fuel combustion (less than one micron in size) has little inertia, so the particles follow the gas stream without impacting the scrubbing liquid and being collected.	PM
Coker heaters	FGD	Technically Infeasible: BP found no instances of FGD, or any other add-on control technology, being used to reduce SO_2 in exhaust from any refinery process heater. While this technology has been proven effective on large coal-fired boilers, it has never been demonstrated on gas-fired coker heaters such as those proposed by BP.	SO_2
Coker heater fugitive components	LDAR monitoring	Technically Feasible:	VOC, GHG
Coker heater fugitive components	Optical gas imagining LDAR monitoring	Technically Feasible:	VOC, GHG

4.2.3. Modes of Operation

The operating modes described in the following limits are defined as:

- Forced draft mode is when the forced draft fan is operating.
- Natural draft mode is when the forced draft fan is not operating.
- Normal operations mode is when hot residual oil at normal coking temperatures (900°F or higher) is sent to the coking drum to produce coke. Online cleaning is part of the normal operations mode.
- Standby mode occurs when circulating process materials to maintain unit temperatures when not producing coke from the heater.
- Startup mode is the period between when fuel gas is introduced to the heater burners to heat process materials for coking and ends when process material leaving the heater reaches normal coking temperatures (900°F).
- Pre-startup activities include equipment preparation and verification activities following maintenance events (e.g., curing refractory, general mechanical checkout of equipment, instrument system review, pressure testing, and purging equipment).
- Shutdown mode starts when fuel gas to the heater burners is stopped and ends when heater stack oxygen level reaches 18 percent, or greater, as measured by the Continuous Emission Monitoring System (CEMS).

4.2.4. NO_X BACT for coker heater direct emissions

This section addresses NO_X control including: ranking of control technologies; evaluating economic, energy, and environmental impacts; and selection of BACT for NO_X.

4.2.4.1. Ranking of BACT controls for NO_X

The potential control options listed in Table 21, above, are ranked in Table 22 based on the control efficiencies documented as being achieved in practice.

Table 22. Ranking of Control Technologies for Coker Heaters (NO_X BACT)

Type of Control Technology	Control Efficiency	Ranking
ULNBs w/GCPs and SCR	0.01 lb/MMBtu	1
ULNBs w/GCPs	0.035 to 0.06 lb/MMBtu	2
Conventional burners w/GCPs	0.10 lb/MMBtu	3

4.2.4.2. Evaluation of BACT impacts for NO_X

Facilities that have proposed SCR for NO_X have done so to net out of PSD, for modeling considerations, or because they were in nonattainment areas. BP, which is located in an attainment area, has not netted out of PSD and has found SCR economically infeasible at approximately $40,000 per ton of NO_X removed when compared to highest permitted uncontrolled amount of pollutant emissions. Because NSPS/NESHAP requirements are not considered in calculating the baseline emissions, NWCAA reviewed recent (2015) source test data on the existing coker heaters and found emsisions of 0.074 lb/MMBtu. According to page B.38 of the 1990 NSR Guidance Manual, the "historic upper bound operating data, typical for the source or industry, may be used in defining baseline emissions in evaluating the cost effectiveness of a control option for a specific source." Based on 0.074 lb/MMBtu, the new coker heater capacity of 303 MMBtu/hr, and total annual costs provided by BP of $2,621,652 the cost per ton of the SCR option is calculated as follows:

$$303\frac{MMBtu}{hr}\ x\frac{0.074\frac{lb}{MMBtu}x\frac{8760\ hr}{yr}x\ 1\ ton}{2000\ lb}=\frac{\$31{,}000}{ton}$$

Ecology considers $31,000/ton to be economically infeasible.

Because BP proposes BACT to be the next highest ranked control option, no further evaluation is needed.

4.2.4.3. BACT selection for NO_X

As noted in the application, BP's "proposed replacement coker heaters will be of a balanced-draft design. Forced-draft heaters tend to have greater NOx emissions but are more efficient because they consume less fuel. BP proposes to operate the coker heaters in balanced-draft mode but also requires flexibility to operate in natural draft mode during some circumstances."

Startup and shutdown modes may cause NO_X concentrations to be greater than during other operation modes (forced/balanced or natural draft).

Standby mode is anticipated by BP when residual oil is unavailable for processing. According to the application: "Standby mode includes operating only one coker heater, limiting heater firing rate to less than 120 MMBtu/hr, and recycling hot residual oil through the coker fractionator column. In standby operations, the one coker heater at reduced firing rate would have higher NOx and CO concentrations in the coker heater exhaust compared to concentrations during normal operation…. BP estimates the coker unit would operate in standby mode two – four times during a six year period."

BP proposes BACT to be use of ULNB with GCP demonstrated by meeting the following emissions limits for each coker heater.

- Concentration based limits for normal operation in forced draft mode based on a 30-day rolling average (includes startup/shutdown emissions): 6.0x10^1 parts per million volume dry (ppmvd) at zero percent oxygen.
- Mass emission rate limit for normal operation in forced draft mode: 18.2 lb/hr on a calendar day average (includes startup/shutdown emissions).
- Concentration based limits for normal operation in natural draft mode based on a 30-day rolling average (includes startup/shutdown emissions): 4.0x10^1 ppmvd at zero percent oxygen. This limit shall apply at and after 30 consecutive days of heater operation in natural draft mode. For periods of continuous normal heater operation in natural draft mode less than 30 days in duration, the limit in Condition V.A.1.a must apply.
- Mass emission rate limit for normal operation in natural draft mode: 12.1 lb/hr on a calendar day average (includes startup/shutdown emissions).
- Mass emission rate limit for standby mode: 8.0 lb/hr per heater on a rolling 24-hour average.

Ecology agrees with BP's proposed concentration based and mass based BACT determination for NO_X.

4.2.5. CO and VOC BACT for coker heater direct emissions

This section addresses CO and VOC control including: ranking of control technologies; evaluating economic, energy, and environmental impacts; and selection of BACT for CO and VOC.

4.2.5.1. Ranking of BACT controls for CO and VOC

The potential control options listed in Table 21, above, are ranked in Table 23 based on the control efficiencies documented as being achieved in practice.

Table 23. Ranking of Control Technologies for Coker Heaters (CO and VOC BACT)

Type of Control Technology	Control Efficiency	Ranking
Oxidation catalyst and GCP	CO: 0.002 lb/MMBtu (90% control) VOC: 0.0027 lb/MMBtu (50 percent control)	1
GCP	CO: 33 ppmvd at 0% O2 (0.02 lb/MMBtu VOC: 0.054 lb/MMBtu	2

4.2.5.2. Evaluation of BACT impacts for CO and VOC

BP considered energy and economic impacts of an oxidation catalyst and found that thermal efficiency of the burners would be reduced, and the cost per ton of combined CO and VOC removed would be approximately $68,000. BP determined the use of an oxidation catalyst to be economically infeasible.

4.2.5.3. BACT selection for CO and VOC

BP proposes BACT to be use GCP demonstrated by meeting the following emissions limits for each coker heater.

- CO concentration based limits for normal operation in forced and natural draft mode (excluding-standby, startup, and shutdown): 33 ppmvd at 0 percent oxygen on a 30-day rolling average.
- CO mass emission rate limit for normal operation in forced and natural draft mode: 6.1 lb/hr based on a calendar day average.
- CO mass emission rate limit for startup/shutdown modes: 75.0 lb/hr hourly average.
- CO mass emission rate limit for standby mode: 75.0 lb/hr on a rolling 24-hour average.
- VOC concentration limit of 0.0054 lb/MMBtu.

Ecology agrees with BP's proposed concentration based and mass based BACT determinations for CO and VOC.

4.2.6. PM, PM_{10}, $PM_{2.5}$ BACT for coker heater direct emissions

This section addresses (PM), PM_{10}, and $PM_{2.5}$ BACT control including: ranking of control technologies; evaluating economic, energy, and environmental impacts; and selection of BACT for (PM), PM_{10}, $PM_{2.5}$ BACT.

4.2.6.1. Ranking of BACT controls for (PM), PM_{10}, and $PM_{2.5}$ BACT

The potential control options listed in Table 21, above, are ranked in Table 24 based on the control efficiencies documented as being achieved in practice.

Table 24. Ranking of Control Technologies for Coker Heaters (Particulate BACT)

Type of Control Technology	Control Efficiency	Ranking
Natural gas fuel	PM (filterable): 0.002 lb/MMBtu PM_{10}/$PM_{2.5}$: 0.0075 lb/MMBtu	1
Coker off gas fuel	PM (filterable): 0.0025 lb/MMBtu PM_{10}/$PM_{2.5}$: 0.01 lb/MMBtu	2

4.2.6.2. Evaluation of BACT impacts for PM, PM_{10}, and $PM_{2.5}$

BP prepared an energy impact assessment of the two alternatives. As noted in the application: "If natural gas was imported and burned in the coker heaters instead of the coker off gas, the quantity of coker off gas sent to the RFG mix drum would increase significantly. The result would be a 'fuel gas long' scenario (i.e., more fuel gas available than could be burned in refinery heaters), which would require flaring of RFG. Flaring RFG rather than combusting it in process heaters instead of natural gas, is inefficient from an energy conservation standpoint."
The first option is therefore rejected.

4.2.6.3. BACT selection for PM, PM_{10}, and $PM_{2.5}$

BP proposes BACT to be coker off gas fuel with GCP and demonstrated by meeting the following emission limits for each coker heater.

- For PM, concentration based limit of 0.0025 lb/MMBtu.
- For PM_{10}/$PM_{2.5}$, concentration based limit of 0.010 lb/MMBtu.

Ecology agrees with BP's proposed mass emission BACT determination for PM, PM_{10}, and $PM_{2.5}$.

4.2.7. SO_2 and H_2SO_4 BACT for coker heater direct emissions

This section addresses SO_2 and H_2SO_4 control including ranking of control technologies; evaluating economic, energy, and environmental impacts; and selection of BACT for SO_2 and H_2SO_4.

4.2.7.1. Ranking of BACT controls for SO_2 and H_2SO_4

The potential control options listed in Table 21, above, are ranked in Table 25 based on the control efficiencies documented as being achieved in practice.

Table 25. Ranking of Control Technologies for Coker Heaters (SO_2 and H_2SO_4 BACT)

Type of Control Technology	Control Efficiency	Ranking
Limiting the sulfur in gaseous fuel	H_2S: 25 to 35 ppmv SO_2: 0.023 lb/MMBtu to 0.034 lb/MMBtu	1
Limiting the sulfur in gaseous fuel	H_2S: 160 ppmv	2

4.2.7.2. Evaluation of BACT impacts for SO_2 and H_2SO_4

Because use of spray tower is not known to have been demonstrated in practice for a refinery heater, it is not included in the table ranking above. In addition, BP estimated BACT costs to be approximately $20,000 per ton removed of SO_2 and H_2SO_4 combined, making it economically infeasible.

Types of methods to reduce sulfur in fuel include cryogenic fuel gas treatment, gas phase merox treatment, lean oil absorption with compressor, and lean oil absorption without compressor. BP has found the first three of these to be too costly for BACT at approximately $68,500 per ton removal, $26,600 per ton removed, and $18,300 per ton removed, respectively.

4.2.7.3. BACT selection for SO_2 and H_2SO_4

BP proposes BACT to be limiting sulfur in gaseous fuel with the use of coker off gas and good operating practices as demonstrated by meeting the following emission limits for each coker heater:

- For SO_2, mass emission rate limit of 37 lb/hr on a calendar day average (includes startup/shutdown emissions) for both heaters combined.
- For SO_2, mass emission rate limit of 132 tons per year (tpy) for both heaters combined, on a 12-month rolling total
- For H_2SO_4 , concentration based limit of 0.0053 lb/MMBtu.

Ecology agrees with BP's proposed concentration and mass based BACT determination for SO_2 and H_2SO_4.

In addition, although not BACT, BP has decided to include a lean oil absorption system with a new compressor prior to the lean oil absorption system.

As noted in the application, "the lean oil absorption system is designed to process approximately 44 percent of the coker off gas stream…. One additional benefit of the lean oil absorption system is sulfur removal from the processed coker off gas because mercaptans will be removed with the light hydrocarbons. BP anticipates the lean oil absorption system will reduce annual average sulfur concentrations in the coker off gas 39 percent (from 600 ppm S down to 366 ppm S). This will also reduce SO_2 emissions from the replacement coker heaters by 39 percent. With the lean oil absorption system, the replacement coker heaters are expected to achieve an annual average SO_2 emission rate of 36 ppmvd at 0% O2 (0.050 lb/MMBtu). H_2SO_4 emissions are expected to be 0.0040 lb/MMBtu."

With the compressor installed prior to the lean oil absorption system, "the compressed coker off gas results in additional C3 (propanes) and C4 (butanes) hydrocarbons recovered in the lean oil system and processed in the light ends unit for saleable product. Recovering additional C3 and

C4 hydrocarbons also reduce the sulfur in the coker off gas by up to 65 percent (removal of mercaptans in C3 and C4 hydrocarbons) compared to expected annual sulfur concentrations."

4.2.8. GHG BACT for coker heater direct emissions

This section addresses GHG control including ranking of control technologies; evaluating economic, energy, and environmental impacts; and selection of BACT for GHG.

4.2.8.1. Ranking of BACT controls for GHG

The potential control options listed in Table 21 above, are ranked in Table 26 based on the control efficiencies documented as being achieved in practice.

Table 26. Ranking of Control Technologies for Coker Heaters (GHG BACT)

Type of Control Technology	Control Efficiency	Ranking
CCS	Up to approximately 85 percent.	1
Low carbon fuels; Energy efficient design; Good combustion practices	These are considered baseline alternatives for reducing GHGs.	2

4.2.8.2. Evaluation of BACT impacts for GHG

Taking into account the economic impacts of CCS, BP found that annual operating costs would be approximately twice the cost of the two replacement coker heaters.

Taking into account energy and environmental impacts of CCS, BP found that "the increased energy requirements would result in additional emissions of all pollutants other than CO_2."

For energy efficient design, BP considered using pipeline natural gas as fuel for the replacement heaters. However, BP decided it was more efficient use of energy resources to continue using coker off gas as fuel for the coker heaters instead of purchasing additional natural gas. With online cleaning (or spalling) also provided with the new coker heaters, BP will save energy by reducing the frequency and time required for offline cleaning.

Based on economic, energy, and environmental impacts, CCS is removed from consideration as BACT.

4.2.8.3. BACT selection for GHG

BP therefore proposes the following as BACT: "use of low-carbon fuels (i.e., coker off gas and/or RFG), energy efficient design, and good combustion practices as demonstrated by meeting the following emissions limits for each coker heater:

- Mass emission rate limit of 36,631 lb/hr on a calendar year average.

Ecology agrees with BP's proposed BACT determination for GHG.

4.2.9. BACT for coker heater fugitive component leaks

This section addresses BACT for emissions (leaks) from the coker heater/heat exchanger components. The applicable PSD pollutant emissions from leaks include VOCs and GHG.

4.2.9.1. Ranking of BACT controls for VOC and GHG from component leaks

The potential control options listed in Table 21, above, are ranked in Table 27 based on the control efficiencies documented as being achieved in practice.

Table 27. Ranking of Control Technologies for Components (VOC and GHG BACT)

Type of Control Technology	Control Efficiency	Ranking
LDAR monitoring	Standard leak rates	1
Optical gas imaging LDAR monitoring	Camera leak detection is on a qualitative basis; additional Method 21 monitoring required to quantify leak rate	2

4.2.9.2. Evaluation of BACT impacts for VOC and GHG from component leaks

Because BP selects both options with similar control efficiency, no further evaluation is necessary.

4.2.9.3. BACT selection for VOC and GHG from component leaks

BP proposes BACT to be both of the LDAR alternatives in Table 27.

For VOC and GHG from component leaks, BP proposes an LDAR program that meets the applicable requirements of 40 CFR 60 Subpart GGGa and its referenced Subpart VVa. BP believes that emission rate limits are not appropriate for a fugitive source, and, therefore, does not propose specific BACT limits.

Ecology agrees with BP's proposed BACT determination for VOC and GHG from component leaks.

5. AMBIENT AIR QUALITY IMPACTS ANALYSIS

5.1. Regulatory Requirements

For PSD, an ambient Air Quality Impacts Analysis (AQIA) is required for all pollutants that are emitted in significant quantities to determine the ambient impacts associated with the construction and operation of the proposed modifications. The main purpose of the air quality analysis is to demonstrate that new emissions emitted from the proposed major stationary source or major modification will not cause or contribute to a violation of any applicable NAAQS or PSD increment.

The AQIA starts with preliminary modeling for each pollutant to determine whether an applicant can forego detailed analysis and preconstruction monitoring. If the projected ambient concentration increase for a given pollutant (from the project) is below the PSD Significant Impact Levels (SILs) and Significant Monitoring Concentration (SMCs) for each averaging period, no further analysis of the ambient impact is required for that pollutant. For those pollutants with averaging periods that have project impacts greater than the SIL, a full impact analysis (taking into account other increment consuming sources) is used to demonstrate compliance with NAAQS and PSD increments.

Typically, the AQIA includes an analysis of impacts to local areas that are within 50 kilometers (km) of the project, and a regional air quality impact assessment for impacts beyond 50 km. For projects in Washington State, this latter analysis usually includes impacts on Class I areas. The AERMOD dispersion model was used for predicting local impact concentrations. The CALPUFF dispersion model was used for predicting impact concentrations at greater distances. The CMAQ model was used to predict ozone concentrations. The sources, buildings locations, and building heights modeled for this project with EPA's Building Profile Input Program for the PRIME algorithm (BPIP PRIME versions 04274) are shown in Figure 4.

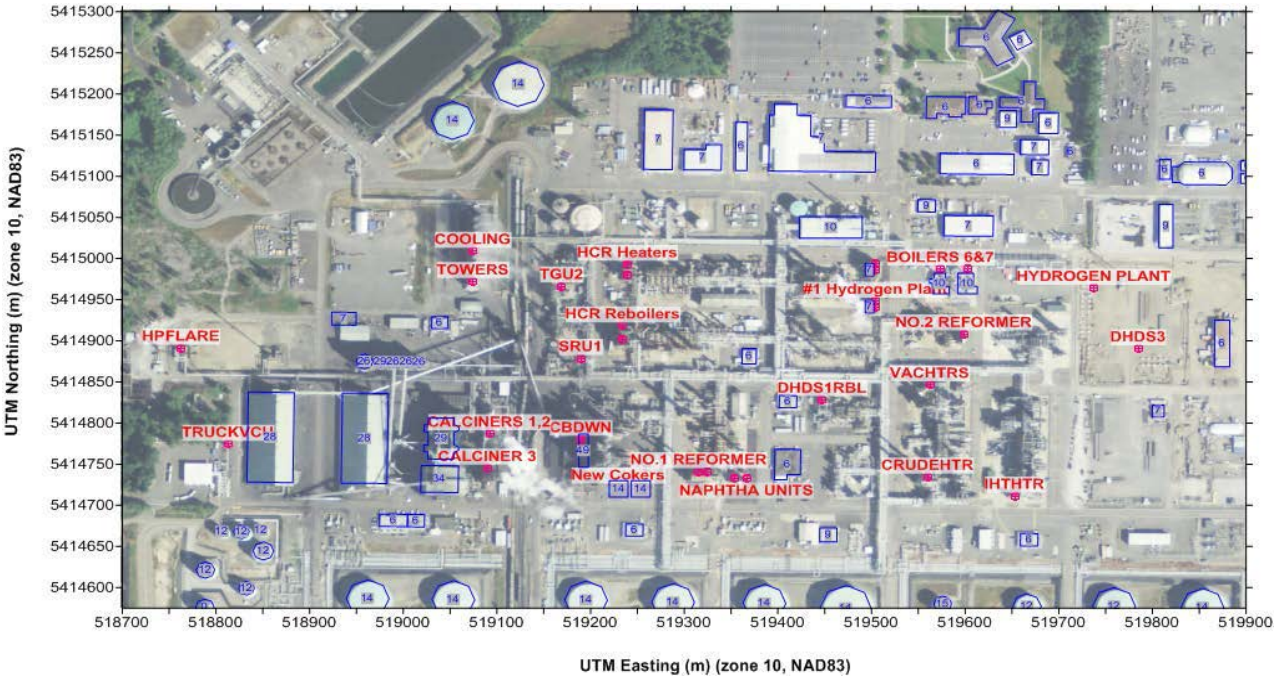

Figure 4. Source and building locations with heights

(Source: BP Cherry Point Refinery Coker Heater Replacement Project application, prepared by Ramboll Environ, received 3/28/2016)

5.2. Maximum Criteria Pollutant Concentrations Predicted by AERMOD

Using project emissions only, AERMOD predicted impacts for criteria pollutants compared to SILS and monitoring de minimis levels or significant monitoring concentrations (SMCs) are presented in Table 28.

Table 28. Maximum Criteria Pollutant Concentrations Predicted by AERMOD

Criteria Pollutant	Averaging Period	Max AERMOD Concentration In Class II Areas (μg/m³)	SIL* (μg/m³)	SMC† (μg/m³)	Is AERMOD Concentration Greater than SIL or SMC?
PM_{10}	24-hr	1.0	5	10	No
	Annual	< 1.0	1	---	No
$PM_{2.5}$	24-hr	0.9	0.07, 1.2, 1.2	4	No
	Annual	0.24	0.06, 0.3, 0.3	---	No
SO_2	1-hr	7.6	---	---	No
	3-hr	5.4	25	---	No
	24-hr	1.6	5	13	No
	Annual	0.6	1	---	No

Table 28. Maximum Criteria Pollutant Concentrations Predicted by AERMOD					
Criteria Pollutant	**Averaging Period**	**Max AERMOD Concentration In Class II Areas (µg/m³)**	**SIL* (µg/m³)**	**SMC† (µg/m³)**	**Is AERMOD Concentration Greater than SIL or SMC?**
NO_2	1-hr	2.8	---	---	No
	Annual	0.5	1	14	No
CO	1-hr	42.8 (164.7)†	2000	---	No
	8-hr	8.8 (31.7)†	500	575	No

∗ Listed SILs and SMCs were promulgated on October 20, 2010, and became effective December 20, 2010. $PM_{2.5}$ SILs are for Class I, II, and III areas, respectively, and are the only SILs with different values for the three different Class areas (I, II, and III). $PM_{2.5}$ SIL and SMC in PSD rules were vacated on January 22, 2013.

† Values in parenthesis represent startup/shutdown/standby.

Because project impacts are not greater than the SILs, a full impact analysis (taking into account other increment consuming sources) is not required to demonstrate compliance with NAAQS and Class II PSD increments. NAAQS compliance is assumed and compliance with WAAQS is assumed by compliance with NAAQS. AERMOD predicted impacts for toxic air pollutants (TAPs) compared Acceptable Source Impact levels (ASILs) are presented in Table 29.

Table 29. Maximum TAP Concentrations Predicted by AERMOD				
TAP	**Averaging Period**	**Max AERMOD Concentration (µg/m³)**	**ASIL (µg/m³)**	**Is AERMOD Concentration Greater than ASIL?**
Acrolein	24-hr	2.80E-04	0.060	No
Arsenic	Annual	9.42E-07	3.03E-04	No
Benzene	Annual	1.01E-05	0.0345	No
Beryllium	Annual	6.23E-07	4.17E-04	No
Cadmium	Annual	5.19E-06	0.000238	No
CO	1-hr	44.0	23,000	No
		(164.7)*		No
Hexavalent chromium	Annual	2.64E-07	6.67E-06	No
Formaldehyde	Annual	0.00035	0.167	No
H_2SO_4	24-hr	0.057	1	No
H2S	24-hr	0.014	2	No
Nickel	Annual	0.00001	0.0042	No
NO_X	1-hr	11.0	470	No
SO_2	1-hr	12.8	660	No
Benzo(a)pyrene	Annual	2.74E-07	9.09E-04	No
7,12-Dimethylbenzanthracene	Annual	7.54E-08	1.41E-05	No

∗ Values in parenthesis represent startup/shutdown/standby.

5.2.1. Secondary $PM_{2.5}$ formation

AERMOD results were scaled to take into account the impacts of potential formation of secondary $PM_{2.5}$. Precursors of $PM_{2.5}$ include NO_X, SO_2, and VOCs. Under specific atmospheric conditions, these precursors may coagulate onto existing particles or nucleate into new particles. Based on the analysis presented as stated in the application, "the assessments indicate that secondary $PM_{2.5}$ formation is minimal within the project region. Conservative modeling of emissions indicates the cumulative impact of primary and secondary $PM_{2.5}$ is below both the 24-hour and annual SILs, negating the need for regional modeling."

5.3. Ozone Impacts

NO_X and VOCs are precursors to ozone. BP's proposed increases in NO_X and VOC emissions are such that they require an analysis of the effect that the proposed increase in these emissions would have on the area's ozone levels.

5.3.1. Ozone background information

EPA has set primary and secondary ozone standards to protect human health and welfare. On March 12, 2008, EPA revised the primary and secondary ozone standards to 0.075 ppm for an 8-hour average. And EPA lowered it again in December 2015 to 0.070 ppm for an 8-hour average.

Ozone is formed in the troposphere when sunlight causes complex photochemical reactions involving oxides of nitrogen (NO_X), VOCs, and carbon monoxide (CO) that originate chiefly form gasoline engines and burning of other fossil fuels. Woody vegetation is another major source of VOC emissions to NO_X emissions within the surrounding airshed, and the relative reactivities of the VOC species. NO_X and VOCs can be transported long distances by regional weather patterns before they react to create ozone in the atmosphere, where it can persist for several weeks. Because ozone is a regional pollutant, precursor sources both near and far can contribute to ozone formation.

Breathing ozone can trigger a variety of health problems for humans, including chest pain, coughing, throat irritation, and congestion. It can worsen bronchitis, emphysema, and asthma. Elevated levels of ozone can also reduce lung function by inflaming the linings of the lungs. Repeated exposure to elevated concentrations of ozone may permanently scar lung tissue. Ozone is also phytotoxic, causing damage to a variety of vegetation (Ashmore et al., 2004). Ozone pollution has been shown to reduce plant growth, alter species composition, and predispose trees to insect and disease attack. Ozone also causes direct foliar injury to some plant species. Ozone affected leaves are marked with discoloration and lesions, and they age more rapidly than normal leaves (EPA, 2007).

Ozone enters plants through leaf stomata, causing changes in biochemical and physiological process. The mesophyll cells under the upper epidermis of leaves are the most sensitive to ozone, and those are the first cells to die. The adjacent epidermal cells then die, forming a small

black or brown interveinal necrotic lesion that becomes visible on the upper surface of the leaf. These lesions, termed oxidant stipple, are quite specific indicators that the plant has been exposed to ozone. There are other plant symptoms that can result from exposure to ozone. However, these symptoms are non-specific for ozone since other stressors can also cause them to occur. In general, the most reliable indicator that ozone has impacted vegetation is oxidant stipple.

In addition to effecting individual plants, ozone can also affect entire ecosystems. Plants growing in areas with high exposure to ambient ozone may undergo natural selection for ozone tolerance (EPA, 2007). The final result could be the elimination of the most ozone sensitive genotypes from the area (National Park Service, 2010).

While VOCs and NO_X are recognized as precursors to the formation of ground level ozone, which is regulated as a criteria pollutant, the FLAG guidance states that "current information indicates most FLM areas are NO_X limited" with respect to the formation of ground level ozone. A NO_X limited region is one where the concentration of ozone depends on the amount of NO_X in the atmosphere. This occurs when there is a lack of Nitrogen Dioxides, thus inhibiting ozone titration when oxygen mixes with VOCs. In these regions, controlling NO_X would reduce ozone concentrations. A VOCs limited region is one where concentration of ozone depends on the amount of VOCs in the atmosphere. In these regions, controlling VOCs would reduce ozone concentrations. The FLAG guidance further states that "until there is enough information available for FLAG to determine whether ozone formation in each FLM area is primarily limited by NO_X or VOC emissions, we will assume all FLM areas are NOx limited and will focus on control of NO_X emissions" (FLAG Executive Summary and Section 3.4.5).

Based on this information, BP provoded the following ozone study.

5.3.2. BP ozone study results

BP's consultant Ramboll Environ (RE) used the U.S. EPA's Community Multi-scale Air Quality model (CMAQ) to simulate July 25–30, 1998.

As described in BPs application:

"This is one of the more severe historical ozone episodes, and similar modeling analyses have been used in several analyses to estimate the effects on ozone concentrations from Project increases in emissions of NOx and VOCs greater than 100 TPY. The modeling simulations were based on those developed by Washington State University (WSU) Laboratory for Atmospheric Research in support of a state implementation plan (SIP) for Ozone for the Portland, OR and Vancouver, WA region. The WSU database was used as the base case scenario to analyze future emission scenarios for the Puget Sound Clean Air Agency (PSCAA). In those analyses and the current analysis, a three-day period beginning July 26, 1998 was selected because the episode had the highest observed ozone levels in recent years for the Seattle/Portland airshed… Two cases were run: a base case using all the sources in the emission inventory used by WSU and a

'PTE' case that also include the increased emissions associated with the project. The difference between the ozone concentrations predicted by the two runs is used to evaluate the implications to regional ozone due to the Project. …Ozone concentrations decreased in the region close to the facility due to 'NOx titration,' where $NO + O_3 \rightarrow NO_2 + O_2$. Elsewhere, increases in ozone concentration are predicted to be very small, typically less than 1 ppb, and limited to the area within about 75 km of the facility. The model-predicted increase in ozone concentration at the Enumclaw monitoring site, which for the period 2006-2008 did not attain the NAAQS…, is less than 0.1 ppb."

RE concluded, and Ecology agrees, that the Project will have an insignificant effect on regional ozone concentrations.

5.4. Impacts on Class I Areas

In addition to addressing NAAQS and PSD increments, PSD rules require an analysis of air quality related values (AQRVs) on Federally mandated Class I areas are defined in the Clean Air Act as having special national or regional value from a natural, scenic, recreational, or historic perspective. Class I areas include national parks over 6,000 acres and wilderness areas and memorial parks over 5,000 acres as of 1977. The impacts to these areas are stringently regulated because they have remained relatively untouched by development.

On June 17, 2016, the Federal Land Managers (FLMs), specifically the National Park Service (NPS) provided comments to Ecology regarding BP's affect on visibility and deposition in Class I areas.

According to separate modeling performed by the NPS, the NPS believes that "emissions from the refinery are currently causing visibility impairment at Olympic NP and North Cascades NP and significantly contributing to excess nitrogen deposition at both parks." In addition, the NPS also believes that the Coker Replacement project itself "will significantly increase the impacts of visibility-impairing pollutants at Olympic NP and significantly increase nitrogen deposition at North Cascades NP."

As described in Section 3.1 of this TSD, there are a series of emission calculation tests that a PSD applicant must follow, which are different for new and existing equipment involved with the project. BP's baseline dates were based on various 24 month periods within the last 10 years, and varied by pollutant, consistent with PSD regulations. The BP baseline dates are provided in Table 2 of this TSD. As seen in Table 2, emissions from the year 2014 (average of 2013–2014) was the chosen baseline period for only one pollutant (H_2SO_4). Deviations in baseline dates used in BPs application, are consistent with PSD regulations and are provided in Table 3. PSD regulations also allow excludable emissions as described in Section 3.2.2, as well as a contemporaneous emissions netting period (approximaltey seven years for this project) as described in Section 3.3.1.

Ecology interprets impacts based on the PSD regulations that we, as a SIP approved PSD program must follow. Based on Table 31 of section 5.4.2.1, because project impacts are not greater than the SILs for Class I areas, an impact analysis (taking into account other increment consuming sources) is not required to demonstrate compliance with NAAQS and PSD increments.

The total project modeling effort performed by BP, which used a combination of AERMOD, CALPUFF, and CMAQ models, satisfies current PSD regulations and was reviewed by Ecology. Table 30 provides the items that Ecology modelers reviewed and their conclusions regarding BP's modeling. The modeling results were provided to Ecology, FLMs, EPA, and NWCAA as part of BP's application in 2016.

Table 30. PSD Modeling Review Checklist

The purpose of this checklist is to provide documentation that an applicant's ambient analysis was reviewed by an AQP modeler. If something other than "yes" is checked, please provide a brief description describing why the analysis can or cannot be used to appropriately demonstrate compliance with air quality standards.

Project Name: BP Coker replacement – 2016 resubmittal			
Reviewed by: Ranil Dhammapala	Date Review Completed: 4/1/2016		
Modeling Inputs Consistent with Draft PSD Permit			
	Yes	No	N/A
Do the PSD application and preliminary approval documents agree with the modeling inputs and outputs?[1]	x		
Have the operating scenarios, emission patterns, source parameters and plume chemistry (e.g. PVMRM, if applicable) been represented consistently and concisely in the modeling files and PSD application?	x		
Air Quality Analysis			
Was the modeling protocol followed?	x		
Steady-state model used: AERMOD Version number: 15181 Most recent version?	x		
Non-steady state model used for Class I: Calpuff Version number: V5.8.4 Level 130731 Most recent version?	x		
Have the appropriate background concentrations and/or competing sources been included?	x		
Were at least 5 years of representative meteorological data used in the modeling?	x		
Were meteorological data properly QA/QC'd?	x		
Does the modeling domain clearly contain all areas where concentrations exceed the acceptable source impact level (ASIL) and the significant impact level (SIL)?	x		

Table 30. PSD Modeling Review Checklist The purpose of this checklist is to provide documentation that an applicant's ambient analysis was reviewed by an AQP modeler. If something other than "yes" is checked, please provide a brief description describing why the analysis can or cannot be used to appropriately demonstrate compliance with air quality standards.			
Does the receptor grid spacing adequately resolve key areas?	x		
Were FLM receptors used for Class I modeling?	x		
Have dispersion modeling inputs and outputs (including POST files of hourly concentrations at designated receptors, if required) been submitted in an acceptable electronic format?	x		
[1]If a preliminary PSD approval is not yet available, answer "YES" if the modeling inputs and outputs agree with the PSD application.			

On October 14, 2016, the NPS provided helpful clarifications of their concerns in a document submitted to Ecology. The letter from NPS documented no dispute that PSD regulations were followed or that the BP application was complete, but rather emphasized the different approaches used to address PSD regulatory applicability from approaches used to address project impacts on CLASS I area AQRVs.

Ecology reviewed the FLMs' guidance on evaluating impacts of major projects on Class I areas: *Federal Land Managers' Air Quality Related Values Work Group (FLAG) Phase I Report – revised* (2010) (National Park Service, 2010), and noted different AQRV modeling approaches in FLAG than were performed by both NPS and BP.
For visibility considerations, FLAG states the following:

"Applicants should calculate the 24-hour average net emission increase for each pollutant from modified facilities as the maximum allowable 24-hour average minus the actual hourly rate averaged over the past two years (annual emissions over past two years/hours of operation over last two years)" (FLAG p. 24).

For visibility, BP initially looked at maximum short-term emissions and subtracted current permit limits or used maximum current permit limits and did not subtract the two-year average baseline described in FLAG. For long-term AQRV considerations, BP initially subtracted PSD baseline periods from emissions instead of FLAG baseline periods. Initially, BP also subtracted capabable of accommodating emissions, which is a procedure not described in FLAG.

NPS made no distinction between maximum short-term emissions for visibility and long-term emisisons for other AQRV considerations. NPS also used only one year as baseline (2014) instead of the two-year average baseline described in FLAG. In addition, NPS did not address the project's maximum allowable 24-hour average change in extinction but rather provided a review of visibility in Class I areas using deciviews. Figure 4 on page 26 of FLAG (Procedure for Visibility Assessment for Distant/Multi-Source Applications) provides a clear path for an applicant's project toward a "Presumptive No Adverse Impact" if the project's maximum

allowable 24-hour average minus the actual hourly rate averaged over the past two years "change in extinction" is less than five percent. NPS also considered impacts from the facility as a whole which is beyond the scope of FLAG for new projects under "new" source review (NSR). However, the October 14, 2016, clarifications from the NPS assisted Ecology, such that in an October 27, 2016, meeting with BP, Ecology requested additional clarifications from BP for their AQRV analysis which resulted in a lower permit limit for SO_2.

Per WAC 173-400-730(2)(a)(i): "Ecology may request additional information clarifying aspects of the application after it has been determined to be complete." On November 4, 2016, BP provided supplemental material to Ecology which show by two separate pathways in the FLAG manual, how the project (with the lower coker SO_2 permit limit of 37 lb/hr) is not expected to cause an adverse impact and that additional refined analysis is not required.

Based on Ecology's review of BP's application and modeling, Ecology has found that BP has satisfied applicable PSD regulations regarding impacts on Class I areas. Ecology has found that BP has adequately addressed AQRVs (including visibility and deposition) in accordance with the FLAG manual as discussed in the following subsections, in accordance with PSD regulations.

5.4.1. AQRVs background information

PSD regulations and guidance require additional impact analyses to evaluate the effects of the project's emissions on visibility, local soils, and vegetation in Class I and in also in Class II areas (See Section 6), and the effect of increased air pollutant concentrations on flora and fauna in the Class I areas. The additional impact analyses are also used to evaluate the effect of the project on growth in the area surrounding the project in Class II areas (See Section 6).

The analyses assess increment consumption and impacts on AQRVs in Class I areas. AQRVs include regional visibility or haze, the effects of primary and secondary pollutants on sensitive plants, the effects of pollutant deposition on soils and receiving water bodies, and other effects associated with secondary aerosol formation. The FLMs for the National Park Service, U.S. Fish and Wildlife Service, and U.S. Forest Service have the responsibility of ensuring AQRVs in the Class I areas are not adversely affected. The FLMs' guidance on evaluating impacts of major projects on Class I areas is the *Federal Land Managers' Air Quality Related Values Work Group (FLAG) Phase I Report – revised* (2010) (National Park Service, 2010).

In FLAG, the FLMs have developed a tool to screen out projects that would not have a significant impact on AQRVs based on annual emissions and distance from a Class I area. This screening tool is called the Q/D Method, which is to divide the amount of emission increases in tpy (Q) by the distance to a federal Class I area in km (D). FLAG states that "The FLM role within the regulatory context consists of considering whether emissions from a new source, or emission increases from a modified source, may have an adverse impact on AQRVs and providing comments to permitting authorities. Therefore, the agencies will consider a source locating greater than 50 km from a Class I area to have negligible impacts with respect to Class I AQRVs if its total SO_2, NO_X, PM_{10}, and H_2SO_4 annual emissions (in tpy, based on 24-hour

maximum allowable emissions), divided by the distance (in km) from the Class I area (Q/D) is 10 or less. The agencies would not request any further Class I AQRV impact analyses from such sources."

5.4.2. BP AQRV analysis

Initially, BP did not provide Q/D values in their application, but did mention at a March 2016 preapplication meeting that Q/D was less than 10. As part of their November 4, 2016, supplement, BP shows in Table 31 below that the project's Q/D is less than 10.

Table 31. Class I Areas within 300 KM of the BP Facility

Area	Distance (D) from BP to Class I Area (km)	*Q Divided by D (Q/D) (tons/km)	Is Q/D Less than 10? (Yes/No)
Alpine Lakes Wilderness Area	157	2	Yes
Glacier Peak Wilderness Area	108	3	Yes
Pasayten Wilderness Area	123	3	Yes
Olympic National Park	102	4	Yes
North Cascades National Park	78	5	Yes
Mount Rainier National Park	213	2	Yes
Goat Rocks Wilderness Area	255	1	Yes

∗ The Q/D values represent new emissions from the proposed coker heaters but do not take into account the tpy reductions from removal of the old coker heaters. If the tpy reductions from the old coker heaters are taken into account, the largest Q/D value is reduced to 3 tons/km.

Because Q/D is less than 10, according to the FLAG guidance manual (quoted above), "The agencies would not request any further Class I AQRV impact analyses from such sources." However, BP did complete an additional AQRV analysis as part of their application.
As noted in BP's application, "The CALPUFF modeling system is currently recommended for evaluating impacts to AQRVs in Class I Areas affected by long-range transport. Potential impacts are characterized based on predictions of total nitrogen and/or sulfur deposition flux, change in light extinction, and pollutant concentrations. Pollutant concentration predictions were also used to assess Class I Area increment consumption for pollutants subject to PSD review."

5.4.2.1. Predicted Class I area criteria pollutant concentrations compared to SILs and PSD increments

For impacts including impacts to vegetation, BP used the CALPUFF modeling system to predict concentrations of NO_2, SO_2, PM_{10}, and $PM_{2.5}$ in regional Class I areas. This TSD does not provide all of the impact analysis figures provided in BP's application, but rather provides a summary table (Table 32) showing that all predicted concentrations are less than the SILs and PSD Class I increments.

Table 32. Maximum Criteria Pollutant Concentrations Predicted by CALPUFF					
Criteria Pollutant	**Averaging Period**	**Max CALPUFF Concentration In Class I Areas* (µg/m³)**	**SIL† (µg/m³)**	**PSD† Increment (µg/m³)**	**Is CALPUFF Concentration Greater than SIL or PSD Increment?**
PM_{10}	24-hr	< 1.0	5	8	No
	Annual	< 1.0	1	4	No
$PM_{2.5}$	24-hr	0.055	0.07, 1.2, 1.2	2	No
	Annual	0.0075	0.06, 0.3, 0.3	1	No
SO_2	3-hr	0.15	25	25	No
	24-hr	0.0417	5	5	No
	Annual	0.0061	1	2	No
NO_2	Annual	0.0063	1	2.5	No
CO	1-hr	< 2000	2000	--	No
	8-hr	< 500	500	--	No

∗ Mount Baker Wilderness Area and San Juan Islands (Class II Areas) were also addressed by the applicant even though they are not Class I areas. Maxiumum predicted results for these areas are below all SIL and PSD increment values listed.

† Listed SILs and SMCs were promulgated on October 20, 2010 and became effective December 20, 2010. $PM_{2.5}$ SILs are for Class I, II, and III areas, respectively, and are the only SILs with different values for the three different Class areas (I, II, and III). PM2.5 SIL and SMC in PSD rules were vacated on January 22, 2013.

5.4.2.2. Soils and receiving water bodies (deposition)

BP used CALPUFF to predict deposition of nitrogen and sulfur compounds emitted by the Project on soils and vegetation in regional Class I areas.

BP used NPS established Deposition Analysis Thresholds (DATs) for nitrogen and sulfur of 0.005 kg/ha/yr. The DATs provide screening criteria for the FLMs to identify potential deposition fluxes to be addressed.

This TSD does not provide all of the deposition analysis figures provided in BP's application, but rather provides a summary table from the application showing that CALPUFF-predicted maximum nitrogen and sulfur deposition fluxes do not exceed the DATs in any Class I area. As a result, the FLAG guidance manual provides a clear off-ramp from additional refined analysis for a "new or modified source," and therefore, as shown on page 67 of FLAG, BP's project has arrived into the flowchart box labelled as "presumptive no adverse impact" in terms of deposition.

Table 33. Predicted Class I Area Deposition Fluxes Compared to NPS DAT		
Class I Area of Interest	**Nitrogen Deposition (kg/ha/yr)**	**Sulfur Deposition (kg/ha/yr)**
Alpine Lakes Wilderness Area	0.0003	0.0005
Glacier Peak Wilderness Area	0.0011	0.0015
Goat Rocks Wilderness Area	0.0001	0.0001
Mount Adams Wilderness Area	0.0001	0.0001
Mount Rainier National Park	0.0001	0.0002
N. Cascades National Park	0.0026	0.0037
Olympic National Park	0.0016	0.0025
Pasayten Wilderness Area	0.002	0.0029
NPS DAT	0.005	0.005
Mount Baker Wilderness Area*	0.0037	0.0051
San Juan Island*	0.0018	0.0039
* Mount Baker Wilderness Area and San Juan Island are not Class I areas. They are included in the analysis because FLMs have requested inclusion in previous permit applications.		

5.4.2.3. Visibility (Class I areas)

As noted in BP's application, a five percent change in extinction is recommended in FLAG to indicate a "just perceptible" change to a landscape. This TSD does not provide all of the impact analysis figures provided in BP's application, but rather provides a summary table from the application showing that the 98th percentile changes in extinction for this project compared to the thresholds established by the FLMs.

As shown in Table 34, the 98th percentile changes in extinction for this project are less than the five percent threshold established by the FLMs. As a result, the FLAG guidance manual provides a clear off-ramp from additional refined analysis for a "new or modified source," and therefore, as shown on page 26 of FLAG, BP's project has arrived into the flowchart box labelled as "presumptive no adverse impact" in terms of visibility.

Table 34. Predicted Class I Area Visibility Results				
Class I Area of Interest	**98th Percentile (%) Change in Visibility**			
	2003	**2004**	**2005**	**3 year**
Alpine Lakes Wilderness	0.38	0.42	0.38	0.4
Glacier Peak Wilderness	0.87	0.89	0.96	0.89
Goat Rocks Wilderness	0.11	0.1	0.14	0.12
Mount Adams Wilderness	0.08	0.08	0.09	0.08
Mount Rainier National Park	0.18	0.18	0.2	0.19
N Cascades National Park	1.34	1.35	1.25	1.34

Table 34. Predicted Class I Area Visibility Results				
Class I Area of Interest	98th Percentile (%) Change in Visibility			
	2003	2004	2005	3 year
Olympic National Park	2.74	2.24	2.77	2.64
Pasayten Wilderness	0.78	0.95	0.77	0.87
Mount Baker Wilderness*	1.65	1.85	1.99	1.91
San Juan Islands*	3.61	2.95	3.17	3.2

* Mount Baker Wilderness Area and San Juan Islands are not Class I areas. Results are included in the analysis because the FLMs have requested inclusion in previous permit applications.

6. ADDITIONAL IMPACTS ANALYSIS

6.1. Growth Analysis

6.1.1. Construction and growth impacts

The number of employees at BP is not expected to increase as a result of this project, and BP does not expect significant population growth in the area nor significant secondary air quality impacts due to the project. However, during construction of this project, there will be approximately 150 additional employees onsite. During this time, there will be increased traffic congestion, increased vehicle emissions, and increased demand for local skilled workers. Because construction is expected to last only two years or less, these increases are expected to be temporary and insignificant. New area homes or industry growth are not anticipated to be significant as a result of the project. Therefore, the proposed project is not expected to cause adverse construction and growth related impacts.

6.2. Visibility (Class II Areas)

As noted in the application, the 1990 draft NSR Workshop Manual provides the following description of a Class II visibility analysis in Chapter D, Section II.D:

"In the visibility impairment analysis, the applicant is especially concerned with impacts that occur within the area affected by applicable emissions. Note that the visibility analysis required here is distinct from the Class I area visibility analysis requirement. The suggested components of a good visibility impairment analysis are:" (addressed for each below the listed components in italics font):

- *"a determination of the visual quality of the area,"*

Regarding area regional haze, pre-existing visible water vapor (steam) plumes can be seen in the Cherry Point area, both from BP and other sources, which dissipate short distances from the facility due to dispersion and evaporation.

- *"an initial screening of emission sources to assess the possibility of visibility impairment, and"*

The project emissions are located within the existing BP buildings and stacks so that after the project is completed, the project emission sources are not likely to impair local visibility any more than the existing facility emission sources. According to BP's application, "the replacement coker heaters and the projected increases in emissions from other combustion units (i.e., Hydrocracker heaters) will be the largest sources of emissions associated with the Project. Although state and local regulations restrict visible emissions to a 20 percent opacity limit, emissions from gas-fired combustion units are typically less than five percent and are rarely visible.

- *"if warranted, a more in-depth analysis involving computer models."*

For Class II areas, the analysis provided for regional haze appears to be sufficient. BP performed an in-depth analysis of visibility in nearby Class I areas.

6.3. Soils and Vegetation Analysis

Regarding economic impacts of the project on vegetation and soils, or agriculture and forestry, the project emissions comply with secondary NAAQS (assumed by compliance with SILs), which were intended to address factors such as soils and vegetation.

Based on the deposition modeling described in Section 5.4.2.2, deposition rates of sulfur and nitrogen would be less than 0.8 lb/acre/yr and 0.5 lb/acre/yr, respectively, which are similar to rates modeled for a previous BP project. For that project, BP's consultant Ramboll Environ obtained information indicating that "impacts to commercial farms will be insignificant." Because deposition rates are similar from this project, Ecology believes BP has satisfactorily addressed project impacts on Class II soils and vegetation.

7. STATE ENVIRONMENTAL POLICY ACT

Under Washington State rules, a final PSD permit shall not be issued for a project until the applicant has demonstrated that State Environmental Policy Act (SEPA) review has been completed for the project. Whatcom County is the lead agency for SEPA.

On xxx, 2016, Whatcom County Approved SEPA #xx-xxx. Ecology concludes that the applicant has adequately demonstrated compliance with SEPA requirements.

8. PUBLIC INVOLVEMENT

This PSD permitting action is subject to a minimum 30-day public comment period under WAC 173-400-740. A newspaper public notice announcing the public comment period was published

in The Bellingham Herald on November 14, 2016. In accordance with WAC 173-400-740(2)(a), application materials and other related information xxx made available for public inspection at:

Northwest Clean Air Agency 1600 South Second Street Mount Vernon, WA 98273-5202 (360) 428-1617	Washington State Department of Ecology Air Quality Program 300 Desmond Drive SE Lacey, WA 98503 (360) 407-6800

A public meeting and hearing on the proposed PSD permit will be held on December 15, 2016. With the public meeting starting at 6:00 PM and the formal hearing scheduled for 6:30 PM at the Four Points by Sheraton in Bellingham, WA.

The public comment period ends on December 16, 2016, at 5:00 PM PDT.

9. AGENCY CONTACT

Gary Huitsing, P.E.
Washington State Department of Ecology
Air Quality Program
P.O. Box 47600
Olympia, WA 98504-7600
(360) 407-6314
gary.huitsing@ecy.wa.gov

REFERENCES

Ashmore, M., Karlsson, P.E., and H. Pleije, New directions: a new generation of ozone critical levels for the protection of vegetation in Europe (correspondence), *Atmospheric Environment*, 38: 2213-2214, 2004.

Brace, S., Peterson, D. L., and D. Horner, Diagnosing Ozone Injury in Vascular Plants of the Pacific Northwest, U.S. Department of Agriculture, Forest Service, Pacific Northwest Research Station, 1998.

California Air Resources Board, Statewide BACT Clearinghouse, <http://www.arb.ca.gov/bact/bact.htm>, California Environmental Protection Agency, Sacramento, California, 2014.

EPA, *Draft EPA New Source Review Workshop Manual*, 1990. Available at: <http://www.epa.gov./ttn/nsr/gen/wkshpman.pdf>

National Park Service, *Federal Land Managers' Air Quality Related Values Work Group (FLAG) Phase I report – revised 2010)*, 2010. Available at: <http://www.nature.nps.gov/air/pubs/pdf/flag/Flag_2010.pdf>

South Coast Air Quality Management District, SCAQMD Clearinghouse, Diamond Bar, California, 2014. Available at: <http://www.aqmd.gov/bact/287160.htm>

ACRONYMS AND ABBREVIATIONS

$^{\circ}F$	degrees Fahrenheit
$\mu g/m^3$	micrograms per cubic meter
ALW	Alpine Wilderness
AQIA	Air Quality Impacts Analysis
AQRV	Air Quality Related Values
BACT	Best Available Control Technology
CARB	California Air Resources Board
CFR	Code of Federal Regulations
CO	carbon monoxide
CO_2e	carbon dioxide equivalent
Ecology	Washington State Department of Ecology
EPA	United States Environmental Protection Agency
FLAG	Federal Land Managers' Air Quality Relative Values Workgroup
FLM	Federal Land Manager
FR	Federal Register
GHG	greenhouse gas
H_2SO_4	sulfuric acid mist
HAPs	hazardous air pollutants
hr/yr	hours per year
kW	kilowatt
MACT	maximum achievable control technology
NAAQS	National Ambient Air Quality Standards
NESHAP	National Emission Standards for Hazardous Air Pollutants
NOC	Notice of Construction
NO_X	nitrogen oxides
NPS	National Park Service
NSR	New Source Review
PM	particulate matter
PM_{10}	particulate matter less than 10 micrometers in diameter

$PM_{2.5}$	particulate matter less than 2.5 micrometers in diameter
ppb	parts per billion
ppm	parts per million
PSD	Prevention of Significant Deterioration
PTE	potential to emit
Q/d	emissions to distance
RBLC	RACT/BACT/LAER Clearinghouse
SCR	selective catalytic reduction
SEPA	State Environmental Policy Act
SER	significant emission rate
SIL	significant impact level
SO_2	sulfur dioxide
SO_X	sulfur oxides
TAP	toxic air pollutant
tpy	tons per year
VOC	volatile organic compound
WAC	Washington Administrative Code