DWG NO 155-073232-082 SHT 1

BECHTEL NATIONAL

PROJECT: RPP-WTP
PROJECT NO.: 24590
PO NO.: 24590-CD-POA-MEE0-00003, REV. 0
EQUIPMENT NO.: LVP-HTR-00001B, LVP-HTR-00003B
LOCATION: RICHLAND, WA

Please note that source, special nuclear, and byproduct materials, as defined in the Atomic Energy Act of 1954 (AEA) are regulated at the U. S. Department of Energy (DOE) facilities exclusively by DOE acting pursuant to its AEA authority. DOE asserts that pursuant to AEA, it has sole and exclusive responsibility and authority to regulate source, special nuclear, and byproduct materials at DOE-owned nuclear facilities. Information contained herein on radionuclides is provided for process description purposes only.

PRELIMINARY DRAWING
NOT FOR PRODUCTION USE
CONSULT ENGINEERING FOR INFORMATION

REVISIONS

ZONE	REV	DESCRIPTION	DATE	DWN	CHKR	ENGR	APVD
ALL	1	ADDED BILL OF MATERIALS, REMOVED STAND-OFF, CHANGED T/C LOCATION, REVISED WIRING DIAGRAM, CHANGED SPACER, MISC. CHANGES. EC #28582	2/8/2012	MCR	RDP	MCR	CDJ
ALL	2	ADDED (1) LIFTING LUG FOR A TOTAL OF (3). EXTERNAL PRESSURE WAS 15 PSIG. ADDED FLANGE CORROSION ALLOWANCE NOTE #9, HEATING ELEMENT TUBING WALL THICKNESS WAS .028, C OF G WAS 22.5, WEIGHT WAS 1050 LBS, ADDED T/C TAGS. EC #29106	4/17/2012	MCR	RDP	MCR	CDJ
ALL	3	ADDED EXTERNAL TERMINAL ENCLOSURE, ADDED SHEET #3, HEATER WEIGHT (NOTE #7) WAS 1056 LB, REVISED C OF G. EC #32197	6/19/2013	MCR	RDP	MCR	CDJ
ALL	4	ADDED TERMINAL BLOCK, GROUND LUG, PANEL, NAMEPLATE, & ADJUSTMENT PLATE TO BOM. EC #32430	7/24/2013	MCR	RDP	MCR	CDJ
ALL	5	CORRECTED P/N FOR ITEM 31. QUANTITY FOR ITEMS 30, 31, 32, & 33 WAS (6). EC #32592	8/22/2013	MCR	RDP	MCR	CDJ
ALL	6	CORRECTED P/N FOR ITEM 37, WAS 3/4" NPT. EC #32592	8/23/2013	MCR	RDP	MCR	CDJ
ALL	7	ADDED EXTERNAL TERMINAL ENCLOSURE DETAIL. EC #32704	9/5/2013	MCR	RDP	MCR	CDJ
ALL	8	NAMEPLATE WAS FOR HAZARDOUS LOCATIONS. EC #33299	12/18/2013	MCR	RDP	MCR	CDJ
ALL	9	ADDED SST TAGS ON LIFTING LUGS. EC #33581	2/10/2014	MCR	RDP	MCR	CDJ
ALL	10	CHANGED SPACER RODS FROM 304 SST TO 316 SST PER CUSTOMER REQUEST. EC #35759	4/17/2015	MCR	RDP	MCR	CDJ

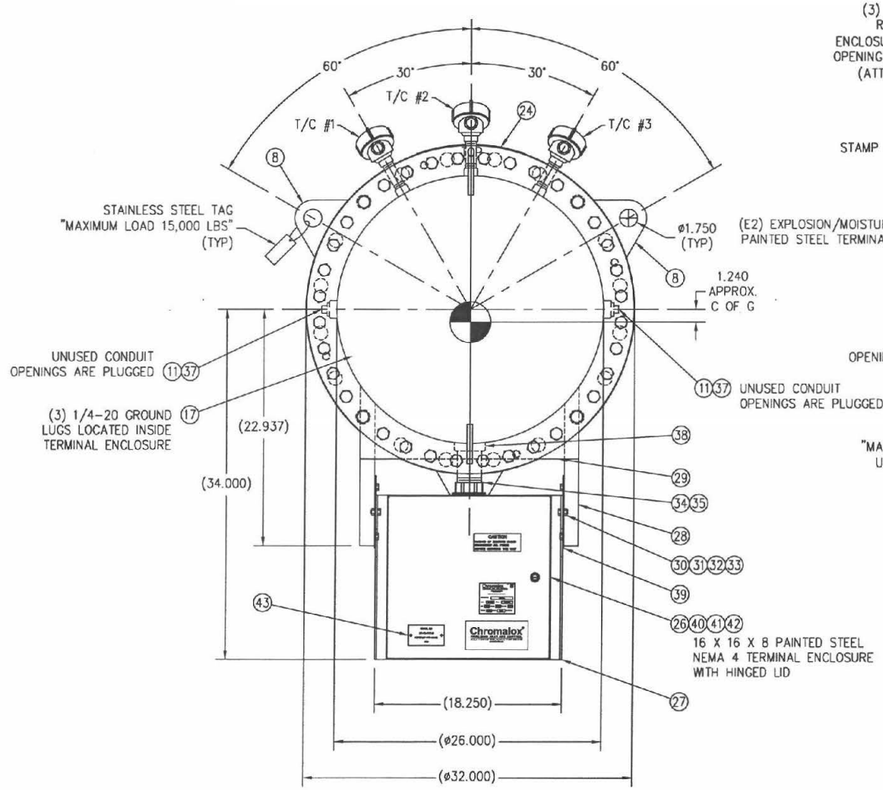

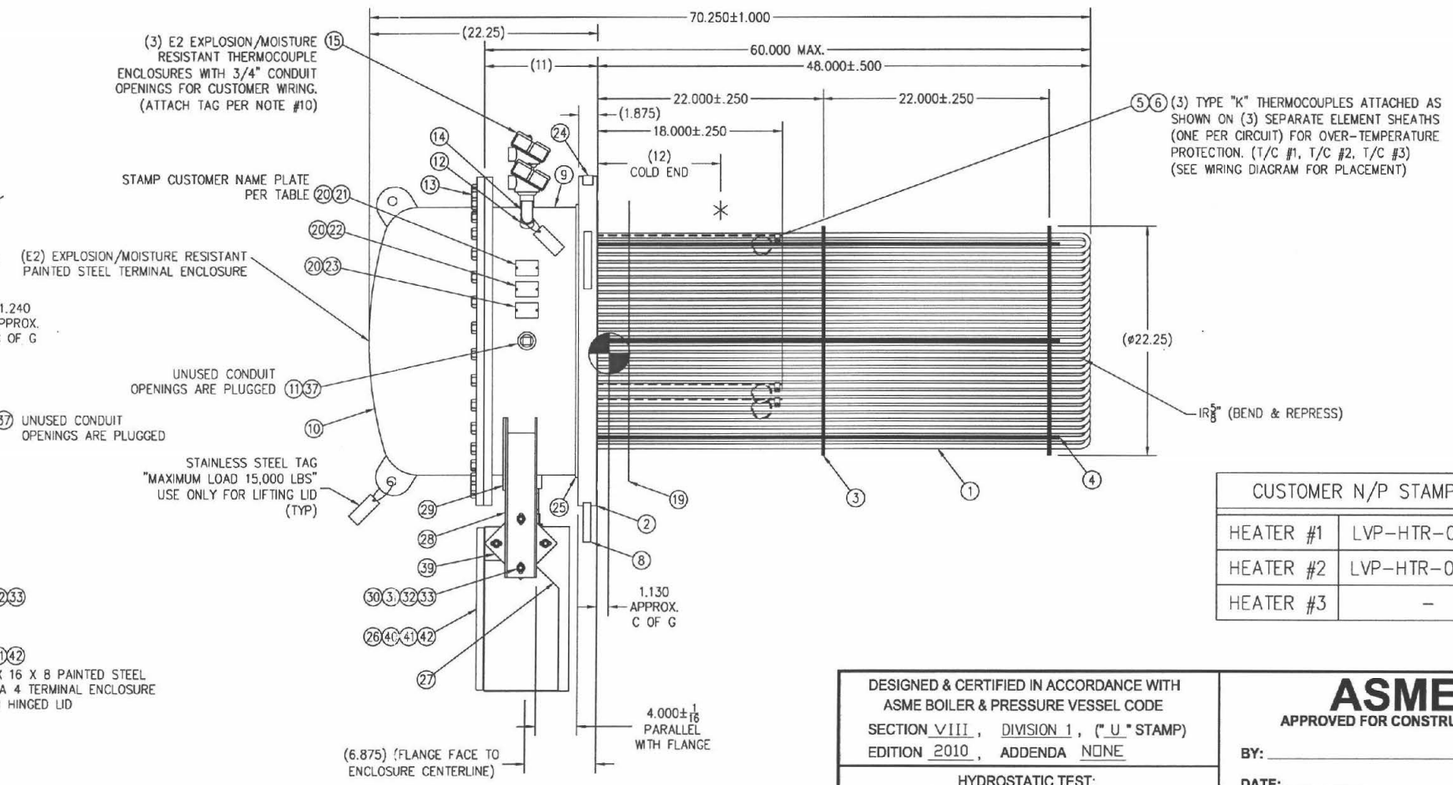

CUSTOMER N/P STAMPING	
HEATER #1	LVP-HTR-00001B
HEATER #2	LVP-HTR-00003B
HEATER #3	–

SEE SHEET #3 FOR BILL OF MATERIALS

DESIGNED & CERTIFIED IN ACCORDANCE WITH ASME BOILER & PRESSURE VESSEL CODE
SECTION VIII, DIVISION 1, ("U" STAMP)
EDITION 2010, ADDENDA NONE

HYDROSTATIC TEST:
22.5 PSIG FOR 20 MINUTES.

DESIGN DATA

HEATED MEDIUM: AIR
LETHAL SUBSTANCE: YES ☐ NO ☒
DESIGN PRESSURE: 15 PSIG (MAWP)
EXTERNAL MAWP FV PSIG
PROCESS DESIGN TEMP. 250 °F
MIN. TEMP. (MDMT): −20 °F

ASME
APPROVED FOR CONSTRUCTION
BY:
DATE:
SERIAL NO:

USER DATA APPROVAL DATE:

		UNITS
MIN. FLOW RATE:	1130	CFM
MAX. FLOW RATE:	–	–

OPERATING PRESSURE: 15 PSIG
OPERATING TEMPERATURE: 182 °F

U PART							
CERTIFIED BY CHROMALOX® OGDEN, UTAH 84404 196-071977-001	MAX. ALLOWABLE WORKING PRESS.	15	PSIG	@	250	°F	MFG. S/N
	MAX. ALLOWABLE EXTERNAL WORKING PRESS.	FV	PSIG	@	250	°F	YR. BUILT 2013
	MINIMUM DESIGN METAL TEMP.	−20	°F	@ MAWP	15	PSIG	

㉔ ASME NAMEPLATE DETAIL

Chromalox®
PRECISION HEAT AND CONTROL
Pittsburgh, PA USA
www.chromalox.com
CAT. NO. TMIS-72-039P-E2XX
P/N 155-073232-082
480 V 3 PH 39 KW
SALES: (800) 442-2640 (412) 967-3800
SERVICE: (800) 366-2483
READ INSTRUCTIONS BEFORE USE.
DATE
N.P.L. 196-071709-033

㉓ CHROMALOX NAMEPLATE DETAIL

UNLESS OTHERWISE SPECIFIED, DIMENSIONS ARE IN INCHES. TOLERANCES ARE: FRACTIONS ±1/16 DECIMALS .XX ±0.01 .XXX ±0.005 ANGLES ±2°

THIS DRAWING AND THE SUBJECT MATTER SHOWN HEREON IS CONSIDERED CONFIDENTIAL AND MAY BE PROPRIETARY. UN-AUTHORIZED DISCLOSURE TO OTHER PARTIES IS EXPRESSLY FORBIDDEN.

CONTRACT NO
USED ON
MATERIALS
FINISH
CAD NO

APPROVALS		DATE
DWN	MCR	1/13/2012
CHKR	RDP	1/13/2012
ENGR	MCR	1/13/2012
APVD	CDJ	1/13/2012
DWO	CO# 2042941	

Chromalox® PRECISION HEAT AND CONTROL
Ogden, Utah 84404
www.chromalox.com

IMMERSION HEATER FLANGED
TMIS-72-039P-E2XX, 480V, 39KW, 3-3PH, 5.0 WPSI
24"-150# CONST., ALVAC AL6XN*ASME*

SIZE	CODE IDENT NO	DRAWING NO	REV
D	07131	155-073232-082	10

SCALE 1=7 DO NOT SCALE DRAWING SHEET 1 OF 3

REVISIONS							
ZONE	REV	DESCRIPTION	DATE	DWN	CHKR	ENGR	APVD
		SEE SHEET #1 FOR REVISION RECORD.					

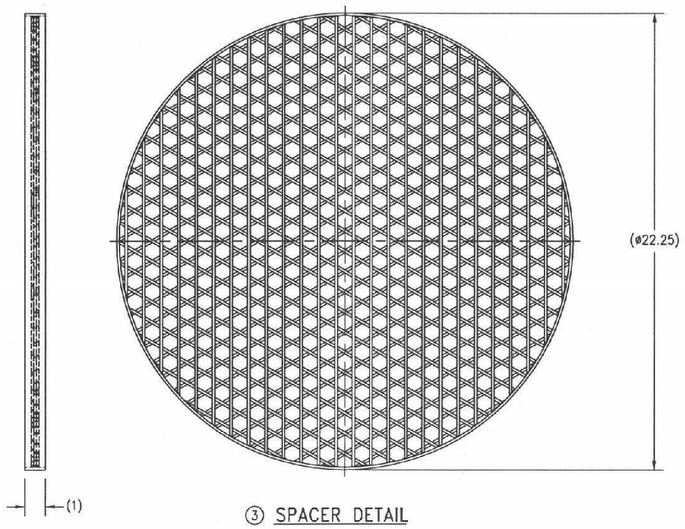

③ SPACER DETAIL

WELDED MESH & RING

PRELIMINARY DRAWING
NOT FOR PRODUCTION USE
CONSULT ENGINEERING FOR INFORMATION

Please note that source, special nuclear, and byproduct materials, as defined in the Atomic Energy Act of 1954 (AEA) are regulated at the U. S. Department of Energy (DOE) facilities exclusively by DOE acting pursuant to its AEA authority. DOE asserts that pursuant to AEA, it has sole and exclusive responsibility and authority to regulate source, special nuclear, and byproduct materials at DOE-owned nuclear facilities. Information contained herein on radionuclides is provided for process description purposes only.

NOTES:

1. ONE GROUNDING TERMINAL (1/4-20) REQUIRED PER CIRCUIT (INTERNAL).
2. ALL CONDUIT OPENINGS SHALL BE CAP PLUGGED.
3. ALL DIMENSIONS IN PARENTHESIS () REPRESENT REFERENCE DIMENSIONS.
4. SEE DRAWING 392-303158-271 FOR WELD MAP.
5. ALL WELDING/BRAZING TO BE PERFORMED BY ASME CERTIFIED WELDERS/BRAZERS.
6. CONSULT WELDING ENGINEER FOR PROPER WELD/BRAZE MATERIALS.
7. APPROXIMATE HEATER WEIGHT: 1118 LBS
8. HEATER MATERIALS SHALL COMPLY WITH "BUY AMERICAN" ACT.
9. CORROSION ALLOWANCE FOR THE AL6XN FLANGE (PRESSURE BOUNDARY) SHALL BE: .0425 IN.
10. THERMOCOUPLES SHALL BE IDENTIFIED WITH A STAINLESS STEEL TAG ATTACHED WITH A STRANDED STAINLESS STEEL WIRE. TAGS SHALL BE MARKED AS FOLLOWS:

HEATER: LVP-HTR-00001B
T/C #1: LVP-TE-0174A
T/C #2: LVP-TE-0174B
T/C #3: LVP-TE-0174C

HEATER: LVP-HTR-00003B
T/C #1: LVP-TE-0175A
T/C #2: LVP-TE-0175B
T/C #3: LVP-TE-0175C

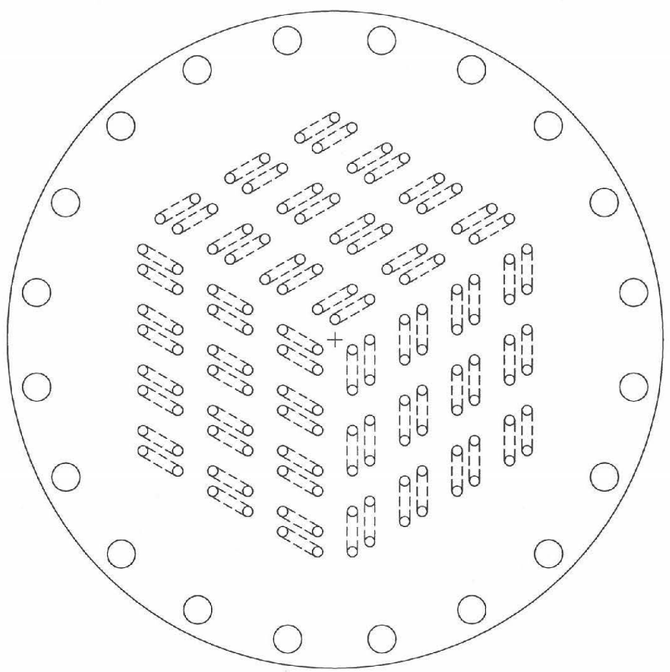

①② ELEMENT LOADING DETAIL

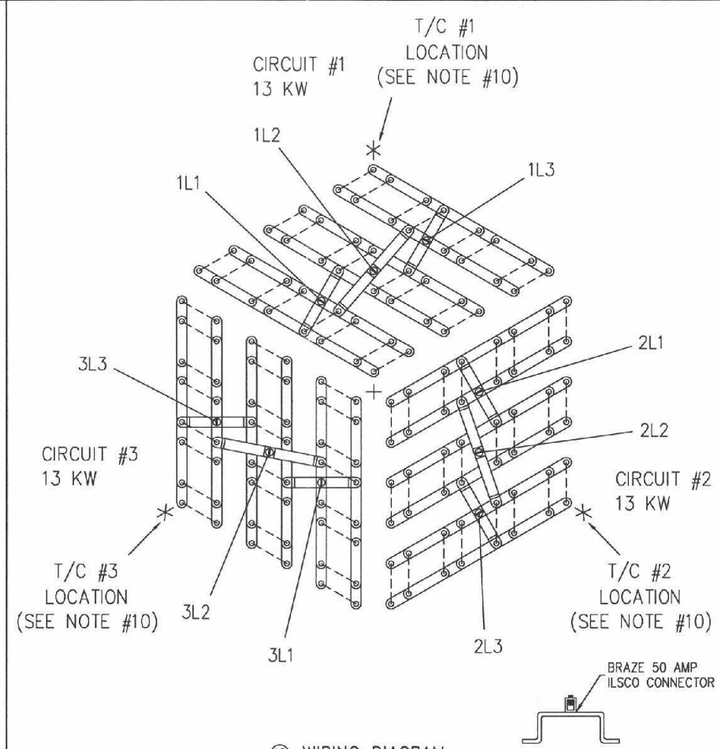

⑱ WIRING DIAGRAM
3-3PH, 15.6 AMPS/CIRCUIT
AT RATED VOLTAGE
3 CIRCUITS @ 13 KW PER CIRCUIT
EACH CIRCUIT CAN BE INDEPENDENTLY CONTROLLED

JUMPER DETAIL

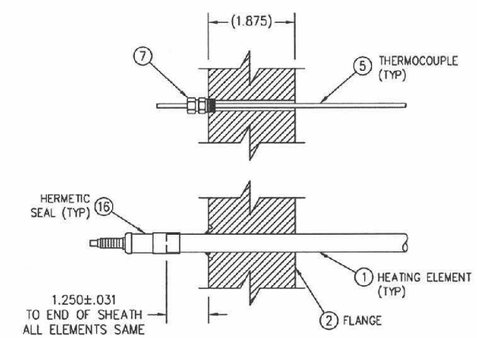

THERMOCOUPLE/ELEMENT DETAIL

UNLESS OTHERWISE SPECIFIED, DIMENSIONS ARE IN INCHES. TOLERANCES ARE:
FRACTIONS ±1/16 DECIMALS .XX ±0.01 .XXX ±0.005 ANGLES ±2°

MATERIALS

FINISH

THIS DRAWING AND THE SUBJECT MATTER SHOWN HEREON IS CONSIDERED CONFIDENTIAL AND MAY BE PROPRIETARY. UN-AUTHORIZED DISCLOSURE TO OTHER PARTIES IS EXPRESSLY FORBIDDEN.

CONTRACT NO

USED ON

APPROVALS		DATE
DWN	MCR	1/13/2012
CHKR	RDP	1/13/2012
ENGR	MCR	1/13/2012
APVD	CDJ	1/13/2012
DWO		CO# 2042941

CAD NO

Chromalox® PRECISION HEAT AND CONTROL
Ogden, Utah 84404
www.chromalox.com

IMMERSION HEATER FLANGED
TMIS-72-039P-E2XX, 480V, 39KW, 3-3PH, 5.0 WPSI
24"-150# CONST., ALVAC AL6XN*ASME*

SIZE	CODE IDENT NO	DRAWING NO	REV
D	07131	155-073232-082	10

SCALE 1=7 | DO NOT SCALE DRAWING | SHEET 2 OF 3

REVISIONS							
ZONE	REV	DESCRIPTION	DATE	DWN	CHKR	ENGR	APVD

BILL OF MATERIAL

QTY.	ITEM	PART NO.	DESCRIPTION	MATERIAL	MATERIAL SPEC.
72	1	319-306025-135	HEATING ELEMENT, ø.475 X .049 WALL WELDED SHEATH	IN800	SB-515
1	2	121-073230-065	FLANGE, 24"-150# BLIND RAISED FACE ANSI B16.5	ALVAC AL6XN	SB-462 (UNS N08367)
2	3	271-305846-913	SPACER, GRILLE TYPE ø22 1/4 X 1 WIDE	316/316L SST	COMMERCIAL GRADE
6	4	242-306954-045	ROD, SPACER SUPPORT ø3/8 X 45 LONG	316 SST	SA-479
3	5	309-304461-036	THERMOCOUPLE, TYPE "K", ø1/8	316 SST	COMMERCIAL GRADE
3	6	056-049134-010	CLAMP, ADJUSTABLE HOSE TYPE	316 SST	COMMERCIAL GRADE
3	7	119-114570-012	COMPRESSION FITTING, 1/8-27 NPT	316 SST	COMMERCIAL GRADE
3	8	194-074095-081	LIFTING LUG, 304 SST	304 SST	SA-240
1	9	304-305258-458	TERMINAL ENCLOSURE, 26" OD	STEEL	SA-516 GR 70
1	10	304-305258-458	TERMINAL ENCLOSURE LID, 26" OD	STEEL	SA-234 WPB/SA-516 GR 70
3	11	079-120795-006	HALF COUPLING, 1" NPT	STEEL	SA-105
3	12	079-120795-005	HALF COUPLING, 3/4" NPT	STEEL	SA-105
36	13	345-073637-081	BOLT, HEX M16 X 2, 6g X 45	STEEL	SAE CLASS 8.8
3	14	198-047676-025	NIPPLE, 3/4" SCH 40, 3" LONG	STEEL	COMMERCIAL GRADE
3	15	152-510012-001	THERMOCOUPLE TERMINAL ENCLOSURE	ALUMINUM	COMMERCIAL GRADE
144	16	145-015921-010	HERMETIC SEAL, ELEMENT TERMINATION	NICKEL/CERAMIC	COMMERCIAL GRADE
3	17	302-146572-007	GROUND LUG, 1/4-20	STEEL	COMMERCIAL GRADE
1	18	337-510419-525	WIRING DIAGRAM	COPPER	COMMERCIAL GRADE
1	19	132-072413-237	GASKET, SPIRAL WOUND, 24"-150#, ANSI B16.5	HAST C-FG	COMMERCIAL GRADE
6	20	248-511025-035	SCREW, DRIVE	304 SST	COMMERCIAL GRADE
1	21	196-510244-008	NAME PLATE, CUSTOMER TAG NUMBER	316 SST	COMMERCIAL GRADE
1	22	196-074046-005	NAME PLATE, WARNING	316 SST	COMMERCIAL GRADE
1	23	196-071709-033	NAME PLATE, CHROMALOX, CSA	316 SST	COMMERCIAL GRADE
1	24	196-071977-001	NAME PLATE, ASME SEC VIII CODE STAMP, 16 GA	304 SST	COMMERCIAL GRADE
1	25	240-512870-082	RING, WELD, 1/4" PLATE, 26" O.D., 25" I.D.	STEEL	SA-516 GR 70
1	26	347-121993-114	TERM. BOX, 16"X16"X8", PAINTED, 18 GA, DOOR 16 GA	STEEL/MISC.	COMMERCIAL GRADE
2	27	027-017179-172	BRACKET, TERMINAL BOX, 3/16" PLATE	STEEL	SA-516 GR 70
2	28	027-017179-173	BRACKET, CHANNEL, C 3 X 4.1	STEEL	ASTM A36
1	29	027-017179-174	BRACKET, BRACE, 1/4" PLATE	STEEL	SA-516 GR 70
12	30	345-049286-041	BOLT, HEX 3/8-16 X 1, CLASS 2A	300 GR SST	ANSI B18.2
12	31	200-075472-015	NUT, HEX, 3/8-16, CLASS 2B	300 GR SST	ANSI B18.2
12	32	328-075528-085	WASHER, FLAT, .791 X .377 X .071	300 GR SST	COMMERCIAL GRADE
12	33	328-075571-012	WASHER, LOCK, SPRING, 3/8"	300 GR SST	COMMERCIAL GRADE
1	34	069-115087-149	CONDUIT, RIGID, 2"	GALV. STEEL	COMMERCIAL GRADE
1	35	119-058106-002	HUB, MOISTURE-RESISTANT, 2" NPT	ZINC	COMMERCIAL GRADE
12	36	334-302795-058	WIRE, TGGT, 10 AWG, 250°C, 3.5 FT.	N.P. Cu, GLASS	COMMERCIAL GRADE
2	37	218-052586-089	PLUG, PIPE, 1" NPT, SQUARE HEAD	STEEL	SA-105
1	38	079-120795-009	HALF COUPLING, 2" NPT	STEEL	SA-105
2	39	027-017179-178	ADJUSTMENT PLATE, 5" X 5", 10 GA.	STEEL	SA-516 GR 70
4	40	0013-20416 (TN)	TERMINAL BLOCK, 3 POLE, #4 - 14 AWG	TIN PLTD. ALUM./PHENOLIC	COMMERCIAL GRADE
1	41	0042-1573 (TN)	GROUND BUSS BAR W/(8) CRIMP LUGS	TIN PLT. COPPER	COMMERCIAL GRADE
1	42	0076-13029 (TN)	PANEL, TERM. BOX, 14.2" X 14.2", PAINTED, 12 GA	STEEL	COMMERCIAL GRADE
1	43	170-072273-131,-132	NAME PLATE, TERM. BOX, BLACK LETTERS ON WHITE	PHENOLIC	COMMERCIAL GRADE
–	44	DELETED	–	–	–

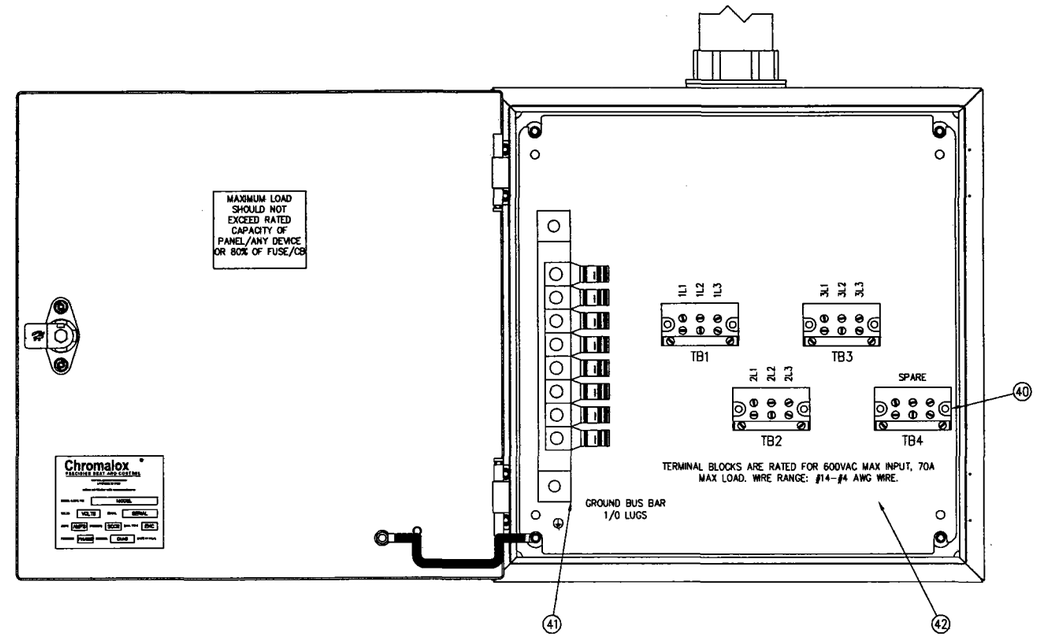

EXTERNAL TERMINAL ENCLOSURE DETAIL

TERMINAL BOX
LVP-TB-20031-B
HEATER LVP-HTR-00001B
480V

43 TERMINAL ENCLOSURE N/P DETAIL

HEATER #1

TERMINAL BOX
LVP-TB-20033-B
HEATER LVP-HTR-00003B
480V

43 TERMINAL ENCLOSURE N/P DETAIL

HEATER #2

Please note that source, special nuclear, and byproduct materials, as defined in the Atomic Energy Act of 1954 (AEA) are regulated at the U. S. Department of Energy (DOE) facilities exclusively by DOE acting pursuant to its AEA authority. DOE asserts that pursuant to AEA, it has sole and exclusive responsibility and authority to regulate source, special nuclear, and byproduct materials at DOE-owned nuclear facilities. Information contained herein on radionuclides is provided for process description purposes only.

UNLESS OTHERWISE SPECIFIED, DIMENSIONS ARE IN INCHES.
TOLERANCES ARE:
FRACTIONS ±1/16 DECIMALS .XX ±0.01 .XXX ±0.005 ANGLES ±2°

MATERIALS

FINISH

THIS DRAWING AND THE SUBJECT MATTER SHOWN HEREON IS CONSIDERED CONFIDENTIAL AND MAY BE PROPRIETARY. UN-AUTHORIZED DISCLOSURE TO OTHER PARTIES IS EXPRESSLY FORBIDDEN.

CONTRACT NO

USED ON

APPROVALS		DATE
DWN	MCR	1/13/2012
CHKR	RDP	1/13/2012
ENGR	MCR	1/13/2012
APVD	CDJ	1/13/2012
DWO		CO# 2042941

CAD NO

Chromalox®
PRECISION HEAT AND CONTROL
Ogden, Utah 84404
www.chromalox.com

IMMERSION HEATER FLANGED

TMIS-72-039P-E2XX, 480V, 39KW, 3-3PH, 5.0 WPSI
24"-150# CONST., ALVAC AL6XN*ASME*

SIZE	CODE IDENT NO	DRAWING NO	REV
D	07131	155-073232-082	10

SCALE 1=7 | DO NOT SCALE DRAWING | SHEET 3 OF 3