Addendum H-A

Closure

This page intentionally left blank.

Contents

H-A1 Introduction H-1

H-A2 Facility Contact Information H-1

H-A3 Facility Description H-1

H-A3.1 Facility History, Function, Location, and Layout H-1
H-A3.2 Products and Production Processes H-2
H-A3.3 Dangerous Waste Management and Units H-2
H-A3.4 Unit Description H-2
H-A3.4.1 Hot Cell A H-6
H-A3.4.2 Hot Cell B H-6
H-A3.4.3 Hot Cell C H-6
H-A3.4.4 Hot Cell D/E H-6
H-A3.4.5 Hot Cell F H-7
H-A3.4.6 Hot Cell Windows H-7
H-A3.4.7 Manipulators H-7
H-A3.4.8 Hot Pipe Trench H-7
H-A3.4.9 Ventilation System H-8
H-A3.4.10 K3 Supply and Exhaust System H-8
H-A3.4.11 Maximum Waste Inventory H-10

H-A4 Closure Performance Standard H-15

H-A5 Closure Activities H-15

H-A5.1 Site Preparation H-16
H-A5.2 Unit Modification/Evaluation Prior to Stabilization H-16
H-A5.3 Stabilization H-16
H-A5.3.1 Grout Design H-16
H-A5.3.2 Potential Impacts to K-3N Ventilation System H-17
H-A5.3.3 Radiological Degradation H-17
H-A5.3.4 Grout Delivery H-18
H-A5.3.5 Grout Placement H-18
H-A5.3.6 K3 Filter Pit and Duct from Hot Cell G to K3 Inlet Valves H-19
H-A5.3.7 K3 Duct and Trench under Hot Cells H-20
H-A5.3.8 Hot Pipe Trench H-20
H-A5.3.9 Hot Cell A Air Lock H-24
H-A5.3.10 Hot Cells H-25
H-A5.3.11 Buoyant Vessels H-26
H-A5.3.12 Hot Cell Viewing Window Protection H-26

H-A5.3.13 Control of Contamination During Grouting H-27
H-A5.3.14 K3 Duct H-27
H-A5.3.15 K3 Duct Trench H-27
H-A5.3.16 Hot Pipe Trench H-27
H-A5.3.17 Hot Cell A Air Lock H-27
H-A5.3.18 Hot Cells H-27
H-A5.4 Removal of Wastes and Waste Residues H-28
H-A5.5 Removal of Unit, Parts, Equipment, Piping, Containment Structure, and Other Ancillary Equipment H-31
H-A5.6 Identifying and Managing Waste Generated During Closure H-31
H-A5.6.1 Oil from Hot Cell Viewing Windows H-32
H-A5.6.2 Excess Grout H-32
H-A5.6.3 Hazardous Debris H-32
H-A5.7 Identifying and Managing Contaminated Environmental Media H-32
H-A5.8 Confirming Clean Closure H-32
H-A5.9 Sampling and Analysis Plan and Constituents to be Analyzed H-32
H-A5.9.1 Constituents to Be Analyzed H-33
H-A5.9.2 Revisions to the Sampling and Analysis Plan and Constituents to be Analyzed H-33
H-A5.10 Role of the Independent, Qualified, Registered Professional Engineer H-33
H-A5.11 Certification of Clean Closure H-33
H-A5.12 Conditions that Will Be Achieved When Closure is Complete H-34
H-A6 Closure Schedule and Timeframe H-34
H-A7 Cost of Closure H-37
H-A8 References H-37

Figures

Figure H-A1. Waste Encapsulation and Storage Facility Pool and Process Cells H-3
Figure H-A2. WESF Second Floor Plan H-4
Figure H-A3. WESF East/West Sectional View H-5
Figure H-A4. WESF North/South Sectional View H-5
Figure H-A5. K1, K2, and K4 Ventilation H-9
Figure H-A6. Current K3 Ventilation System H-10
Figure H-A7. K3 Duct from G Cell to Inlet Valves H-19
Figure H-A8. K3 Trench Access for Grouting H-21
Figure H-A9. Operating Gallery Fill/Vent Fixture H-22
Figure H-A10. Hot Pipe Trench Core Drills Under Hot Cells B, C, and F H-23
Figure H-A11. Hot Pipe Trench Core Drills Under Hot Cells D and E H-24
Figure H-A12. Waste Encapsulation and Stabilization Facility Hot Cells A through F Closure Plan Schedule H-36

Tables

Table H-A1. WESF Hot Cells A through F Contents H-11
Table H-A2. Estimated Hot Cell Grout Volume H-25
Table H-A3. Impurities in Cesium Feed Solution and Salt H-29
Table H-A4. Impurities in Cesium Salts Wasted at Oak Ridge H-30
Table H-A5. Impurities in Strontium Salt H-30
Table H-A6. Waste Encapsulation and Stabilization Facility Hot Cells A through F Closure Activities H-35

Terms

AMU	aqueous makeup
Cs/Sr	cesium/strontium
D&D	decontamination and decommissioning
DWMU	dangerous waste management unit
Ecology	Washington State Department of Ecology
HEPA	high-efficiency particulate air
LDR	land disposal restriction
NOC	Notice of Construction
IQRPE	Independent Qualified Registered Professional Engineer
OUG	operating unit group
PTRAEU	Portable temporary radioactive air emissions unit
RCRA	*Resource Conservation and Recovery Act of 1976*
RICE	reciprocating internal combustion engines
SAP	sampling and analysis plan
TSD	treatment, storage, and/or disposal
WESF	Waste Encapsulation and Storage Facility

H-A1 Introduction

This addendum details the closure activities for the Waste Encapsulation and Storage Facility (WESF) Operating Unit Group (OUG) Hot Cells A through F dangerous waste management unit (DWMU).

H-A2 Facility Contact Information

Waste Encapsulation and Storage Facility Operator and Property Owner:

Stacy L. Charboneau, Manager
U.S. Department of Energy, Richland Operations Office
P.O. Box 550
Richland, WA 99352

Waste Encapsulation and Storage Facility Co-Operator:

John Ciucci, President and Chief Executive Officer
CH2M HILL Plateau Remediation Company
P.O. Box 1600
Richland, WA 99352

H-A3 Facility Description

The WESF was constructed on the west end of B Plant between 1971 and 1973 to encapsulate and store radioactive cesium/strontium (Cs/Sr) that had been separated from Hanford's radioactive tank waste. The radioactive cesium is stored as cesium chloride, and the strontium is stored as strontium fluoride. WESF has stored the encapsulated salts since operations began in 1974, and mixed waste management activities were initiated on July 14, 1997.

The waste is stored in stainless steel, double walled capsules with a maximum outer height of approximately 53 cm (~21 in.) and maximum diameter of approximately 8 cm (~3 in.). A portion of the capsules has been placed into a stainless steel overpack to provide an additional level of containment. WESF is a two-story, 1,858 m^2 (20,000 ft^2) building 47.9 m long, 29.6 m wide, and 12.2 m (157 ft long, 97 ft wide, and 40 ft high), constructed of steel reinforced concrete that is partitioned into seven hot cells, the hot cell service area, operating areas, building service areas, and the pool cell area.

H-A3.1 Facility History, Function, Location, and Layout

WESF, located adjacent to the west side of B Plant, was designed and constructed to encapsulate and store Cs/Sr separated from wastes generated during chemical processing of defense fuel. Construction of WESF started in 1971 and was completed in 1973.

Strontium processing, which occurred in Hot Cells B and C, was shut down in January 1985, and work began to place the strontium line facility in standby/surveillance mode. This process involved equipment cleanout, equipment removal or disposal, jumper removal, nozzle blank off, and instrumentation shut off. The standby/surveillance mode was fully implemented by March 1985.

Cesium processing, which occurred in Hot Cells D/E, was shut down in late 1983, and work began to place the cesium line facility in standby/surveillance mode. This process involved equipment cleanout, equipment removal or disposal, jumper removal, nozzle blank off, and instrumentation shutoff. The standby/surveillance mode was fully implemented by April 1984.

The hot cell service area is located on the south side of the hot cells and is used for access into Hot Cells A and G. The operating areas and other building service areas associated with the hot cells provide areas for instrumentation monitoring, utility support, or manipulator repair, as required. Figures H-A1 through H-A4 show the layout of WESF.

In general, shutdown for both Cs/Sr processing involved system deactivation, selected equipment removal, and flushing of the tanks and associated piping. Only equipment and instruments in the pool cells and Hot Cells F and G that were required for maintenance and surveillance of Cs/Sr capsules remained operational.

In 2001, water sources to Hot Cells A through E were isolated, and manipulators were removed. Manipulators in Hot Cells F and G remained active. Support systems, including the confinement ventilation system (K3), remain operable to provide containment of the legacy radioactive contamination and facility operations during surveillance and maintenance until final decommissioning at the end of facility life.

In 2012, a mission needs statement was developed for the management of Cs/Sr capsules stored at WESF (DOE/RL-2012-47, 2013, *Mission Needs Statement for the Management of the Cesium and Strontium Capsules*). The mission needs statement provided an integrated approach to resolving inadequacies in the K3 WESF exhaust and confinement system, achieving extended storage of the capsules, and deactivating WESF.

WESF is composed of seven hot cells (A through G), the hot cell service area, operating areas, building service areas, and the pool cell area. WESF has two DWMUs: one operating and one initiating closure (see Section H-A3.3 for details of the two DWMUs).

H-A3.2 Products and Production Processes

WESF does not generate products or have any production processes. WESF currently acts as a storage facility for stainless steel capsules containing radioactive cesium chloride and strontium fluoride salts. These capsules are stored in the pool cell area of the pool cells and Hot Cell G DWMU. The Hot Cells A through F DWMU is not needed for capsule or mixed waste storage.

H-A3.3 Dangerous Waste Management and Units

The two DWMUs at WESF are shown in Figure H-A1. The operating DWMU consists of the pool cells, which currently store the capsules, and Hot Cell G; it is shown in purple in Figure H-A1. The closing DWMU consists of Hot Cells A through F and is initiating closure as part of a legacy contamination stabilization project and ventilation replacement. The Hot Cell A air lock also is being included in this closure plan but is not part of the designated Hot Cells A through F DWMU. This closure plan will focus on closure of the Hot Cells A through F DWMU, shown in red in Figure H-A1.

H-A3.4 Unit Description

The WESF Hot Cells A through F DWMU consists of Hot Cells A through F. Waste and drum load out was performed in Hot Cell A during production operations. Hot Cells B through E were used to convert strontium nitrate and cesium carbonate into strontium fluoride and cesium chloride salts. The hot cells also were used to place the salt into doubly encased stainless steel capsules, along with welding and leak testing of the capsules.

Hot Cells F and G remained operational to support contingency operations in the event of a capsule leak but were not used for that purpose. Only Hot Cell G will remain as part of the operating DWMU for continued Cs/Sr capsule storage; Hot Cells A through F will undergo closure activities.

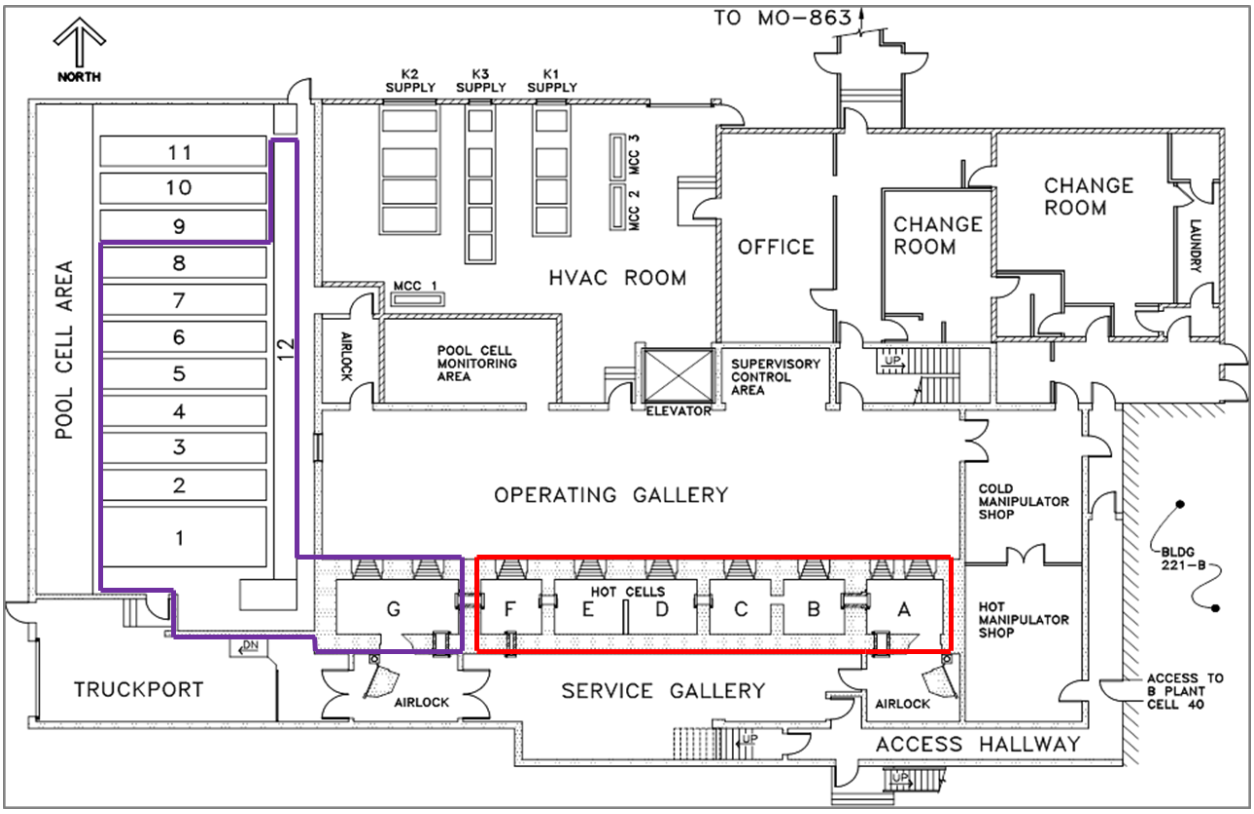

Figure H-A1. Waste Encapsulation and Storage Facility Pool and Process Cells

Removable high-density concrete cover blocks, located at the top of the hot cells (on the floor of the canyon, provide access to the hot cells, pool cell area, and truck port. The north and south walls of all the hot cells and both east and west walls of Hot Cells A and G are 89 cm (35 in.) thick, high-density (235 lb/ft^3), reinforced concrete. Hot Cell A has a 89 cm (35 in.) high-density concrete shielding door for personnel entry from the service gallery.

Process and service piping is embedded in the concrete walls of each hot cell. The pipes connect the hot cells to each other, as well as to the hot pipe trench, transmitter rooms, aqueous makeup (AMU) area, service gallery, operating gallery, manipulator repair shop, truck port, and WESF low-level radioactive waste tank Tank-100 (TK-100), which is located outside on the south side of the WESF. Spare piping is provided between all areas and the hot cells.

All processing activities were completed before 1985, and the hot cells were placed into a lay-up condition. Lay-up of the hot cells included equipment cleanout using a series of demineralized water flushes on all in-cell jumpers and tanks. Chemical flushes were then used to remove residual solids. After the chemical flushes, a final demineralized water flush was used. All jumpers were removed, with the tank nozzles remaining open, and the associated nozzle on the cell wall was capped.

Process feed lines from B Plant to WESF were flushed, as well as the drain lines from WESF to B Plant.

Hot cell piping and tanks were flushed using normal nuclear industry practices to remove any residual feed solutions, processing chemicals, and tank heels. Flushing was completed in 1985 prior to enactment of the *Resource Conservation and Recovery Act of 1976* (RCRA). No processing has occurred in the hot cells since they were placed in layup condition. Items remaining in the hot cells are hazardous debris.

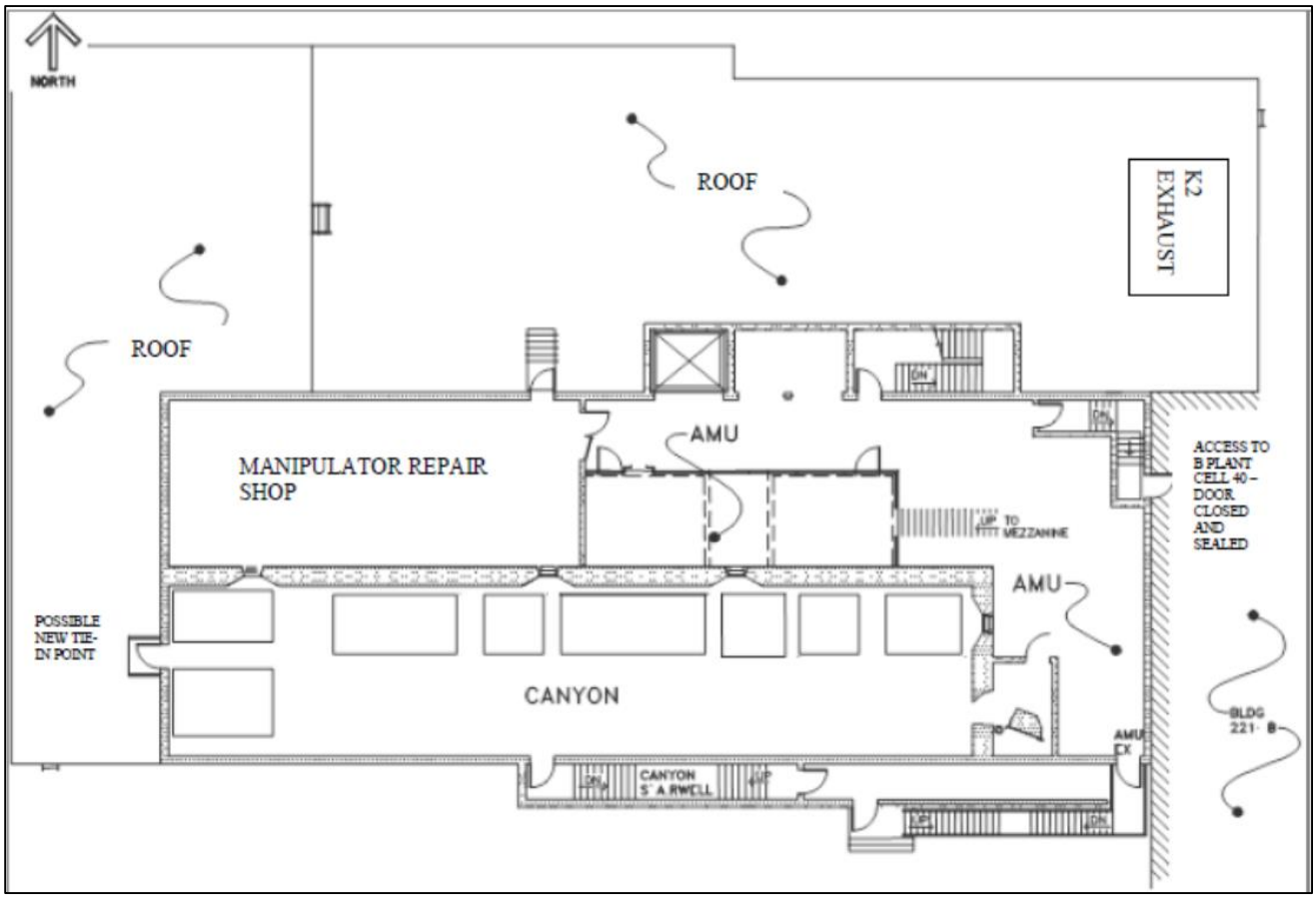

Figure H-A2. WESF Second Floor Plan

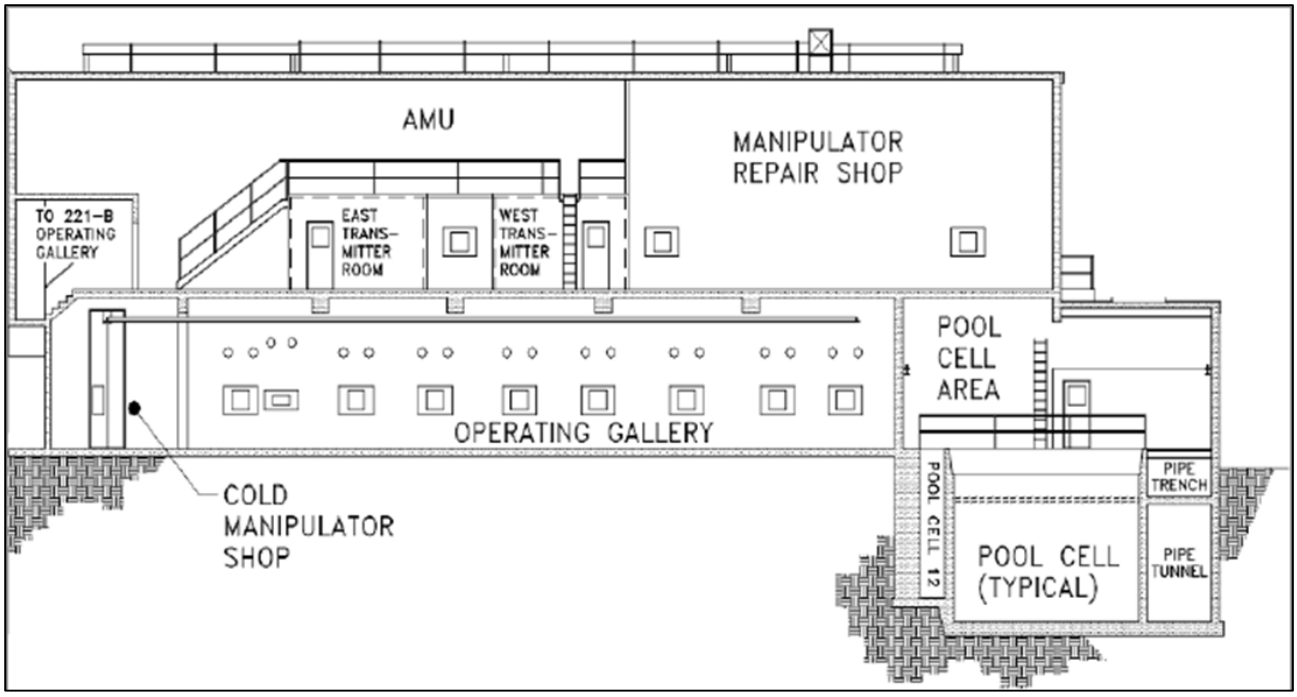

Figure H-A3. WESF East/West Sectional View

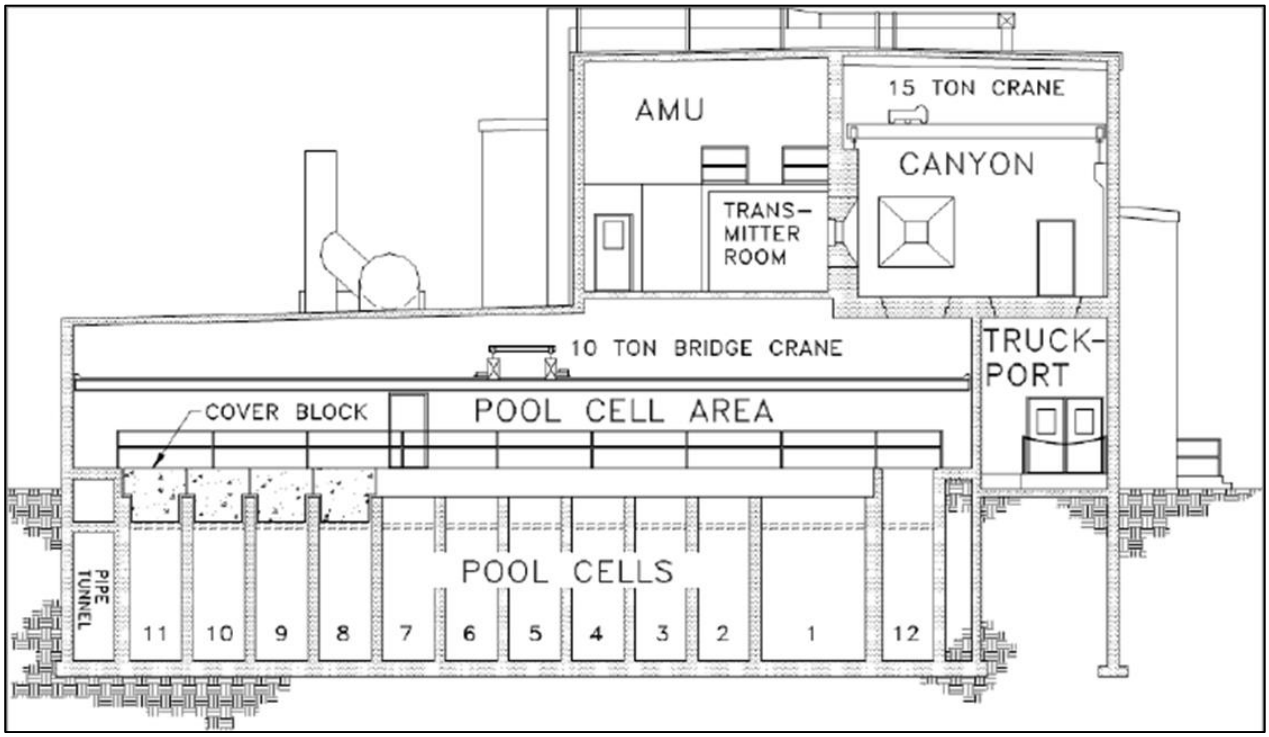

Figure H-A4. WESF North/South Sectional View

H-A3.4.1 Hot Cell A

Hot Cell A contains the equipment that was required for handling high-dose radioactive solid waste from the other hot cells and placing the waste in 55 gal drums. The inside dimensions of Hot Cell A are 3 m (10 ft) long by 2.4 m (8 ft) wide by 4.1 m (13.5 ft) high. The floor and walls are lined with 14-gauge 304L stainless steel. The portion of A cell adjacent to B cell contains a 1.2 m (4 ft) by 2.4 m (8 ft) by 1.2 m (4 ft) stainless steel hood for receiving contaminated solid waste. A pass-through with doors is located between the Hot Cell A hood and Hot Cell B for passage of solid waste from other hot cells. This cell is equipped with a shielded personnel entry door accessible from the service gallery. A pass-through in the Hot Cell A hood is accessible from the Hot Cell A air lock, at the east end of the service gallery.

A covered port with an outer diameter of 55.9 cm (22 in.) is located in the bottom of the hood for the loading of solid waste into 55 gal drums. The hood is equipped with ventilation and filtration equipment for maintaining a slight negative pressure within the hood relative to Hot Cell A to control the spread of contamination.

H-A3.4.2 Hot Cell B

Hot Cell B contains equipment that was used for the strontium wet chemistry processing. The inside dimensions of Hot Cell B are 2.4 m (8 ft) long by 2.4 m (8 ft) wide by 3.9 m (12.8 ft) high. The rear half of the Hot Cell B floor is elevated 56 cm (22 in.) and is 1.2 m (4 ft) wide. The wall between Hot Cells B and C is 50.8 cm (20 in.) thick and is constructed from reinforced structural concrete (150 lb/ft^3). The floor and lower portion of the walls are lined with 14-gauge 304L stainless steel. Two recesses in the rear-elevated section of the hot cell floor are provided for placement of the strontium precipitation tank and supernatant holding tank. A 86.4 cm (34 in.) wide by 137.2 cm (54 in.) high penetration through the interior wall between Hot Cells B and C is provided for placement of the strontium fluoride sintering furnace and filtrate holding tank. A pass-through with doors is located between the Hot Cell A hood and Hot Cell B, and a pass-through without doors is located between Hot Cells B and C for passage of equipment and solid waste. The furnace holds four trays (“boats”) containing approximately 0.6 kg (1.3 lb) of floor sweepings. The floor sweepings contain strontium fluoride and processing debris, including metal shavings, failed manipulator components, and other miscellaneous waste material produced during operations of the hot cells. Each boat is 26 cm (10.25 in.) by 8 cm (3.125 in.)

H-A3.4.3 Hot Cell C

Hot Cell C contains equipment that was used for the strontium fluoride encapsulation process. The inside dimensions of Hot Cell C are 2.4 m (8 ft) long by 2.4 m (8 ft) wide by 3.9 m (12.8 ft) high. The rear half of the Hot Cell C floor is elevated 22 in. and is 1.2 m (4 ft) wide. The wall between Hot Cells C and D is 50.8 cm (20 in.) thick and is constructed from reinforced structural concrete (150 lb/ft^3). The floor and lower portion of the walls are lined with 14-gauge 304L stainless steel. A recess in the rear elevated section of the hot cell floor is provided for placement of the strontium fluoride compactor foundation and two shielded storage containers. A pass-through without doors is located between Hot Cells B and C, and a pass-through with doors is located between Hot Cells C and D for passage of equipment and solid waste. Hot Cell C also contains two 61 cm (24 in.) long threaded, capped pipes containing approximately 1.2 kg (2.6 lb) of strontium fluoride floor sweepings.

H-A3.4.4 Hot Cell D/E

Hot Cell D/E contains equipment that was used for conversion and encapsulation of cesium chloride. This double hot cell is 5.5 m (18 ft) long by 2.4 m (8 ft) wide by 3.9 m (12.8 ft) high and is partitioned in the middle by a cell parapet wall that is 1.2 m (4 ft) wide by 2.4 m (8 ft) high and 20.3 cm (8 in.) thick. The rear half of the Hot Cell D portion of the floor is elevated 25.4 cm (10 in.) and is 1.2 m (4 ft) wide. The wall between Hot Cells E and F is 50.8 cm (20 in.) thick and is constructed from reinforced structural

concrete (150 lb/ft^3). The floor and lower portion of the walls are lined with 14-gauge Inconel® 600 alloy. A recess in the elevated section is provided for placement of the cesium converter tank. A pass-through with doors is located between Hot Cells C and D and between Hot Cells E and F for passage of equipment and solid waste.

H-A3.4.5 Hot Cell F

Hot Cell F contains equipment that was used for the decontamination of the inner capsules. The inside dimensions of Hot Cell F are 2.4 m (8 ft) long by 2.4 m (8 ft) wide by 3.9 m (12.8 ft) high. The rear portion of the hot cell floor is elevated 55.9 cm (22 in.) and is 0.6 m (2 ft) wide. The wall between Hot Cells F and G is 88.9 cm (35 in.) thick and is constructed from high-density reinforced structural concrete (235 lb/ft^3). The floor and lower portion of the walls are lined with 14-gauge 304L stainless steel. A recess in the elevated portion of the hot cell floor is provided for the placement of a shielded capsule storage tank. Hot Cell F is equipped with a pass-through that is accessible from the service gallery. A pass-through with doors is located between Hot Cells E and F and between Hot Cells F and G for passage of equipment and solid waste. Hot Cell F contains an air driven sump pump used for transfer of collected liquids to the low-level radioactive waste tank TK-100.

H-A3.4.6 Hot Cell Windows

Lead glass windows are provided for shielding and direct viewing into the hot cells from the operating gallery. The viewing windows are composed of 25.4 cm (10 in.) of 3.3 g/cm^3 lead glass (hot cell side) and 39.6 cm (15.6 in.) of 6.2 g/cm^3 lead glass (operating gallery side). Oil between the glass sections allows light to pass through the windows. The soft lead glass is protected by cerium-stabilized, non-browning, tempered glass on the hot cell side and tempered glass on the operating gallery side.

H-A3.4.7 Manipulators

Hot Cell A has wall ports for four manipulators. The remaining hot cells (B through F) have wall ports for two manipulators. The manipulators are installed or removed from the hot cells through 25.4 cm (10 in.) diameter ports in the wall. Manipulators have been removed from Hot Cells A through E, and plugs have been installed in the 25.4 cm (10 in.) ports for contamination control. The manipulators remain in Hot Cell F.

H-A3.4.8 Hot Pipe Trench

The hot pipe trench is a concrete channel, 1.5 m (5 ft) wide by 0.6 m (2 ft) deep, that contains the process feed piping to transfer solutions from B Plant to WESF. The trench also contains lines for transferring solutions from WESF back to B Plant. The trench is located beneath the floor of the hot cells and extends from Hot Cell G to the west wall of B Plant. At the west wall of B Plant, the hot pipe trench is reduced to a 35.6 cm (14 in.) stainless steel pipe encasement that terminates in Cell 39 at B Plant. The walls of the hot pipe trench and encasement are constructed of high-density concrete and are lined with lead, where required, to provide shielding. B Plant has been isolated from WESF, and piping in the hot pipe trench is no longer used and is capped in B Plant.

Prior to 1985, when processing was completed at WESF, transfer lines in the hot pipe trench were flushed. These lines have not been used for any processing since they were placed in layup condition. These pipes are classified as hazardous debris. Process piping located in the hot pipe trench will not be filled with grout. The largest process feed pipe inside the trench that will not be grouted is approximately 7.6 to 10.2 cm (3 to 4 in.) and will not cause structural integrity issues due to void space.

® Inconel is a registered trademark of Special Metals Corporation, New Hartford, New York.

H-A3.4.9 Ventilation System

The WESF ventilation system (Figures H-A5 and H-A6) is permitted for operation under a Washington State Department of Health license and the Hanford Air Operating Permit, and is not part of the Hot Cell A through F DWMU. However, information is provided in this closure plan as part of the unit description to provide a complete understanding of the WESF facility. The ventilation systems and confinement ventilation systems at WESF are designed to produce pressure boundaries that prevent the migration of contamination from areas contaminated with radioactive particulates to areas with less potential for contamination to the atmosphere. Contaminated areas are maintained at a negative pressure with respect to areas of lesser potential for contamination and the atmosphere. A major function of the WESF ventilation systems is the removal of hydrogen gas generated by ionization of water, which is caused by the underwater storage of highly radioactive Cs/Sr capsules.

Four separate supply systems and three separate exhaust systems service the confinement areas in WESF. The K1 exhaust and K3 exhaust are the only two systems that exhaust contaminated air. The K2 exhaust system ventilates normally clean areas. The four systems that supply air to various portions of the WESF facility consist of the K1, K2, K3, and K4 supply systems. In general, areas supplied by the K3 supply are exhausted by the K3 exhaust system, but the K1 exhausts areas of the building supplied by the K1 supply, K2 supply, and K4 supply system. The K1 and K3 exhaust systems combine after the respective high-efficiency particulate air (HEPA) filters to exhaust air through a single monitored stack (296-B-10). For purposes of completeness, only portions of the K3 ventilation system that require grouting as part of the Hot Cells A through F closure will be discussed in this closure plan.

H-A3.4.10 K3 Supply and Exhaust System

The K3 exhaust system consists of individual process cell exhaust HEPA filters, control valves, underground ducts, redundant final stage HEPA filters, and redundant fans with standby power. Exhaust from the K3 system sequentially passes through the final stage HEPA filters and an exhaust fan before exiting through the monitored 296-B-10 stack. Failure of the online K3 exhaust fan (or loss of K3 negative duct pressure in the system) automatically initiates action of the standby fan.

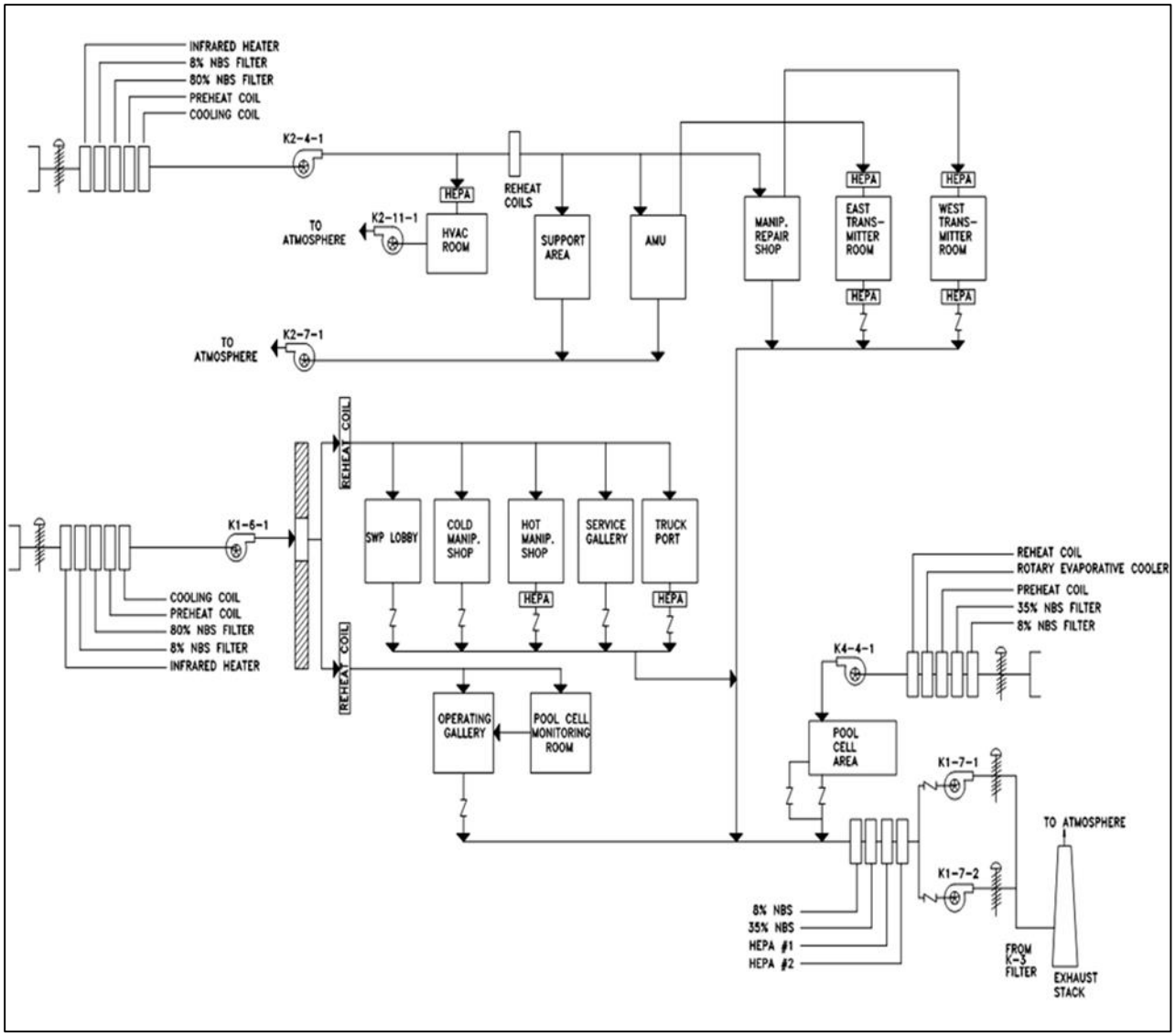

Figure H-A5. K1, K2, and K4 Ventilation

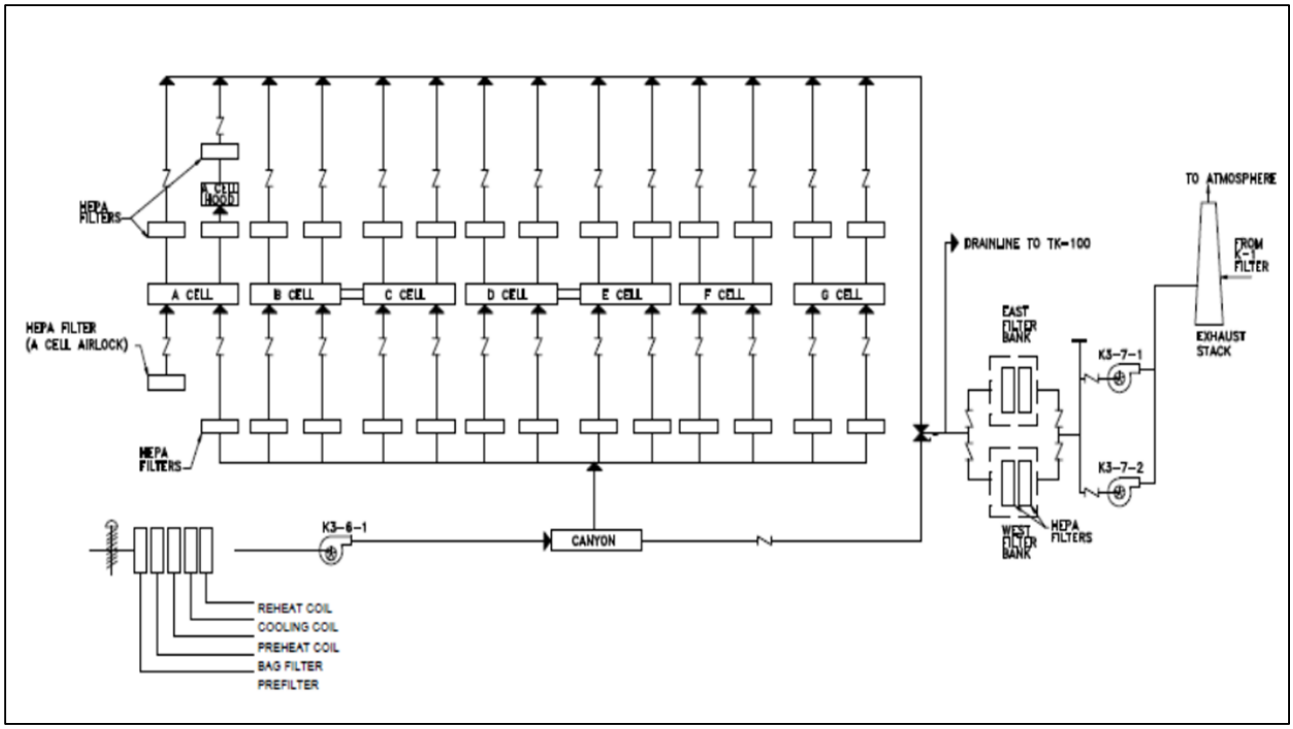

Figure H-A6. Current K3 Ventilation System

Each hot cell has two exhaust paths to a common duct, and each exhaust path has one stage of HEPA filtration. The final K3 HEPA filters consist of two parallel filter housings. Each filtration housing unit is located in a separate K3 filter pit. Normally, one unit is operating, and the other is on standby. Each filter housing contains a system of impingement vanes, moisture separators, heaters (isolated and abandoned in place), a built in sump, and two banks of six HEPA filters. This system is capable of handling large particulate loading if some contamination from the duct migrates toward the filter housings.

Ventilation flow from the exhaust system removes any hydrogen that could be generated in Hot Cells F or G if water was present while capsules were being stored in the hot cell. The K3 exhaust system also provides confinement for the contamination present in the hot cells.

H-A3.4.11 Maximum Waste Inventory

Hot Cells A through F do not store any capsules and did not store any waste capsules after the effective date of RCRA at the Hanford Site. Hot Cell B currently holds approximately 0.6 kg (1.3 lb) of waste in four “boats” located inside the furnace. Hot Cell C currently holds approximately 1.2 kg (2.6 lb) of waste in two threaded, capped pipes. The contents of Hot Cells A through F are detailed in Table H-A1. WESF currently stores the maximum number of capsules that are available to be stored; 1,936 capsules are stored at WESF. The waste volume inside each capsule is approximately 1 L (0.25 gal). Therefore, the maximum waste inventory of WESF is approximately 2,000 L (528 gal).

Table H-A1. WESF Hot Cells A through F Contents

Cell	Cell Contents	Content Description	Waste Description
A	Contains equipment required for handling 242 L (55 gal) drums used to package the radioactive solid waste from the other hot cells. Equipment consists of cart, lift, and Hot Cell A hood.	Equipment including cart, lift, and A Cell hood (see below).	Hazardous Debris
	Hot Cell A hood.	1.2 m (4 ft) by 2.4 m (8 ft) by 1.2 m (4 ft) stainless steel hood. Strontium fluoride and cesium chloride contamination estimated to be on structural surfaces.	Hazardous Debris
B	Four boats of strontium floor sweepings inside the furnace.	Boats are open and contain strontium floor sweepings. Approximately 0.6 kg total waste.	Waste/Waste Residues
	F-B6-1 to F-B6-5 – Strontium Filter Assembly. Filter system used to remove the strontium fluoride precipitate. Installed filters.	Each filter is about 27.3 cm (10.75 in.) tall with 10.2 cm (4 in.) diameter; approximately 45% void. The filter housings were opened, and the filters were removed. Both the filter housings and the filters were free of obvious material.	Hazardous Debris
	Miscellaneous piping associated with processing.	Air and liquid service embedded lines from outside service areas and electrical lines. Embedded lines used as electrical conduits during processing were wiped internally with damp sponges to remove internal contamination.	Hazardous Debris
	HEPA filters on floor.	Replaced in 2000.	Hazardous Debris
	TK-B-1 – Feed Metering Vessel Tank.	Cylindrical tank, vertical and unbaffled, 68.6 cm (27 in.) tall with 52.7 cm (20.75 in.) diameter.	Hazardous Debris
	TK-B-2 – Supernatant Holding Tank.	Cylindrical tank, vertical and unbaffled, with a dish shaped bottom with flanged heads; 91.4 cm (36 in.) tall with 61 cm (24 in.) diameter.	

Table H-A1. WESF Hot Cells A through F Contents

Cell	Cell Contents	Content Description	Waste Description
	TK-B-4 – Strontium Filtrate Waste Holding Tank.	Rectangular tank, vertical and unbaffled. 50.8 cm (20 in.) wide, 76.2 cm (30 in.) long, and 52.1 cm (20.5 in.) tall.	
	TK-B-5 - Strontium Precipitation Tank.	Cylindrical, vertical, unbaffled tank in the upper section and conical tank in the lower section. Upper section is 43.2 cm (17 in.) high with 61 cm (24 in.) diameter. Lower section is 48.3 cm (19 in.) high and tapers from a diameter of 61 cm (24 in.) to 15.2 cm (6 in.)	
	Strontium fluoride sintering furnace (E-B-8).	Rectangular, approximately 52.7 cm (20 in.) wide, 76.2 cm (30 in.) long, and 52.1 cm (20.5 in.) tall.	Hazardous Debris
C	Miscellaneous piping associated with processing.	13 embedded lines, used as electrical conduits, raw water supply, compressed air, and argon supply.	Hazardous Debris
	HEPA filters on the floor.	Replaced in 2000.	Hazardous Debris
	C-C-4 – Compactor.	Used to compact strontium fluoride material in the capsule.	Hazardous Debris
	2 shielded storage tanks (recessed) (TK-C-5A and TK-C-5B).	Identical shielded storage tanks recessed in the C Cell floor. Annular configuration is approximately 45.7 cm (18 in.) long.	Hazardous Debris
	Two closed waste pipes.	Two closed waste pipes with approximately 61 cm (24 in.) long with a pipe cap at each end with material swept from the floor of B Cell or C Cell after it was dried and reduced in volume in the furnace. These containers are stored in the southwest corner of the cell on wall brackets above the bench floor. Total approximate waste volume is 1.2 kg.	Waste/Waste residues

Table H-A1. WESF Hot Cells A through F Contents

Cell	Cell Contents	Content Description	Waste Description
D/E	T-D-5 and T-D-7 (attached to TK-D-5).	T-D-5 is 1.4 m (4.75 ft) tall and T-D-7 is 1.9 m (6.33 ft) tall and both towers are 10.2 cm (4 in.) in diameter and contain 1.2 m (4 ft) of packing (pall rings).	Hazardous Debris
	TK-D-1 – Feed metering tank.	Cylindrical tank 68.6 cm (27 in.) tall with 53.34 cm (21 in.) diameter.	Hazardous Debris
	TK-D-2 – Conversion tank (addition of hydrochloride).	Cylindrical tank 54.6 cm (21.5 in.) tall with 50.8 cm (20 in.) diameter.	
	TK-D-5 – Hydrochloride scrubber tank (caustic addition).	Cylindrical tank 40.64 cm (16 in.) tall with 50.8 cm (20 in.) diameter.	
	TK-E-9 – Shielded storage tank.	Rectangular tank 30.5 cm (12 in.) by 48.3 cm (19 in.) wide and 55.9 cm (22 in.) tall.	
	TK-E-12 – Helium leak check chamber (moved to D Cell).	Outer shell with 11.4 cm (4.5 in.) diameter and approximately 61 cm (24 in.) long.	
F	HEPA filters on the floor.		Hazardous Debris
	Manipulators.		Hazardous Debris
	TK-F-1 Mechanical Scrubber.	Open top rectangular tanks approximately 78.7 cm (31 in.) long by 35.6 cm (14 in.) wide by 35.6 cm (14 in.) high.	Hazardous Debris
	TK-F-2 Electro Polisher.	Open top rectangular tanks approximately 78.7 cm (31 in.) long by 35.6 cm (14 in.) wide by 35.6 cm (14 in.) high.	
	TK-F-4 Storage Tank.	Open top rectangular tanks approximately 78.7 cm (31 in.) long by 35.6 cm (14 in.) wide by 35.6 cm (14 in.) high.	

Table H-A1. WESF Hot Cells A through F Contents

Cell	Cell Contents	Content Description	Waste Description
	TK-F-5 Storage Tank (Recessed).	Cylindrical tank 72.4 cm (28.5 in.) deep with 41.9 cm (16.5 in.) diameter.	
	TK-F-6 Air Surge Tank.	Cylindrical tank 64.8 cm (25.5 in.) tall with 20.3 cm (8 in.) diameter.	
	Modular storage rack for failed or suspect capsules.		Hazardous Debris
	F-B6-1 to F-B6-5.		Hazardous Debris

H-A4 Closure Performance Standard

This closure plan covers initial closure actions for the Hot Cells A through F DWMU. The final clean closure of the Hot Cells A through F DWMU will be accomplished through the final clean closure of the entire WESF OUG. Closure performance standards for the final closure of WESF will be based on requirements found in WAC 173-303-610(2), "Dangerous Waste Regulations," "Closure and Post-Closure," which require closure of the facility in a manner that accomplishes the following objectives:

- Minimize the need for further maintenance.
- Control, minimize, or eliminate, to the extent necessary, to protect human health and the environment, post-closure escape of dangerous waste, dangerous constituents, leachate, contaminated runoff, or dangerous waste decomposition products to the ground, surface water, groundwater, or atmosphere.
- Returns the land to the appearance and use of surrounding land areas, to the degree possible, given the nature of the previous dangerous waste activity.

The first and second bullets are addressed in the closure plan through the stabilization of Hot Cells A through F. Stabilization of the dangerous waste contaminants in Hot Cells A through F is an interim step in the final clean closure of the entire WESF unit, which will be addressed in the closure plan for the continuing operating DWMU of the pool cells and Hot Cell G.

The performance standards above will be further addressed in the Hot Cell G and pool cells closure plan under which clean closure will be finalized.

H-A5 Closure Activities

Hot Cells A through F do not store capsules and will not be used in the future waste management activities at WESF. As part of a ventilation replacement project, legacy contamination at WESF will be stabilized using grout material in areas with high radiation dose rate, which include the hot cells. This closure plan documents initiation of the closure of the Hot Cells A through F DWMU at WESF. Closure actions are necessary in the hot cells to allow for ventilation replacements to the WESF, which will address safety issues. This ventilation replacement will also support eventual removal of Cs/Sr capsules that are currently in the pool cells at the WESF, and subsequent transfer of the capsules to a newly constructed treatment, storage, and/or disposal (TSD) unit.

Significant modifications to hot cells will be performed to enable replacement of the aging ventilation system, including the introduction of grout. Penetrations of floors and walls are expected to be needed. Some minor modifications may be needed to the pool cells to install the new ventilation system but will not be addressed under this closure plan. All modifications will be analyzed to ensure that the safety functions of the structures are not negatively impacted.

Initial closure activities covered under this closure plan for Hot Cells A through F consists of the following main tasks:

- Site preparation
- Unit modification and evaluation prior to stabilization
- Develop sequence and locations for stabilization grout placement within WESF
- Stabilize contaminated areas of WESF
- Closure activities verification
- Extended closure period

Final closure activities will be documented in the entire WESF OUG closure plan.

H-A5.1 Site Preparation

Site preparation will consist of removing the existing 20.3 cm (8 in.) (out of service) steam line located west of the WESF K3 filter pit/vault, associated steam line supports, and WESF support structures. This will provide area needed for excavation and placement of the new K-3N ventilation exhaust system equipment pad and related duct supports. Underground piping and conduit will require relocation due to interferences associated with the depth of the concrete pad.

H-A5.2 Unit Modification/Evaluation Prior to Stabilization

The new K-3N duct will tie into the existing duct located within the WESF Building. The path for the new duct is through a new penetration in the WESF Building south wall. The new duct will be anchored to the wall at the penetration and, therefore, will impose additional loads on the wall, such as wind, seismic, dead, and thermal.

The loading on the wall at the penetration has been estimated based upon the conceptual design drawings. This review has determined that the capacity of the anchorage and components of the connection detail are adequate.

Calculations will be updated during detailed design, where necessary, in order to reflect modifications to the K-3N system design. Design of the K-3N system and supports may be modified during detailed design to decrease the thermal loading on the wall.

Additional modifications will include isolating the current K3 ventilation system, draining oil from the hot cell viewing windows, and performing the core drilling necessary for grout placement.

H-A5.3 Stabilization

The primary function of stabilization is the physical isolation of contamination such that no exposure pathways remain whereby humans or the environment may be adversely impacted.

H-A5.3.1 Grout Design

For this application, grout will not perform a structural function for seismic/structural calculation purposes, but it will have sufficient compressive strength to support applicable loads upon completion of grouting activities.

Formulation of the grout determines its chemical and physical properties. Those of importance include compressive strength, flowability, durability, and heat of hydration. A similar project was successfully completed with stabilization of U Plant. While larger in scope, that project also involved stabilization of hot cells and ventilation ducts using grout. The grout formulation used at U Plant was reviewed for applicability to the stabilization of contamination in the WESF Hot Cells. The following observations and conclusions resulted from this review:

- The compressive strength of the grout used in similar U Plant applications is adequate to support anticipated WESF loads. (U-Plant examples included 1,070 psi measured at 28 days and 1,500 psi measured at 56 days).
- The heat of hydration requirement of <13°F/100 lb cement per cubic yard of grout is similar to the project-specific WESF requirement for heat of hydration.

- The U Plant grout formulations incorporated a significant fly ash component (i.e., 150 to 1,660 lb of fly ash per cubic yard of grout).

Incorporation of fly ash into the grout formulation has many beneficial effects on the performance and stability/durability of the grout. Benefits include a reduction in heat of hydration and lower temperature increases during curing, increased workability and flowability/consistency, increased chemical stability, and minimization of contaminant mobility (e.g., potential for leaching). Preliminary evaluation of the maximum heat of hydration associated with the U Plant grout formulations indicates that the maximum centerline temperature during curing will not exceed the 160°F limit generally recommended by the concrete industry, as long as lift thicknesses do not exceed approximately 0.9 m (3 ft).

The actual maximum centerline temperatures are dependent on the specific grout formulation, ingredients, and proportions. A grout testing plan will be developed as part of the quality assurance testing program to ensure that the grout used complies with project specifications identified herein.

H-A5.3.2 Potential Impacts to K-3N Ventilation System

Grout hydration reactions are exothermic. During curing, grout temperatures approaching 160°F are common. The elevated temperature results in heat and mass transfer to the air in contact with the curing grout. The rates of heat and mass transfer have been calculated for three scenarios: grouting of the hot pipe trench, grouting of K3 duct trench, and grouting of two hot cells simultaneously.

The referenced calculation assumes that all grouting locations will be actively ventilated. The assumed capacity of the portable exhausters, for the purpose of the calculation, is 300 ft^3/min. These exhausters (portable temporary radioactive air emission units (PTRAEUs)) will be operated within an abated air space, with the exception of the exhauster required for grouting of the K-3 filter enclosure. PTRAEUs used inside of the K-3N abated air space will be operated in accordance with the requirements the EU 447, Notice of Construction (NOC) 837 license requirements (e.g., log keeping and smears). The license for the K-3N system will include abatement and monitoring controls necessary for stabilization of the hot cells, and PTRAEUs are used to reduce contamination spread and for worker protection. As part of the K-3N licensing process, PTRAEU use for the K-3 filter enclosure stabilization will be evaluated against the existing EU 447, NOC 837 license requirements. If the work scope requires additional abatement and monitoring controls beyond those provided in the EU 447, NOC 837 license, use of the PTRAEU will be licensed separately.

Potential hydrogen gas generation as a result of radiolysis was also evaluated. Using the upper bound radionuclide inventory (i.e., Hot Cell D/E), the hydrogen generation rate and the timeframe to achieve the lower flammability limit for hydrogen in air of 4.0 vol% were calculated.

The hydrogen generation rate is calculated as 3.39E-05 L/sec. The corresponding time to achieve the lower flammability limit for hydrogen in air of 4.0 vol% in the Hot Cell A headspace is approximately 167 days.

Upon completion of grouting, minimal headspace will remain in the hot cells; thus, exposure to an oxidizer (e.g., air) necessary to support combustion will not be available. The grout will also prohibit the introduction of an ignition source, another requirement for combustion, into the hot cells.

H-A5.3.3 Radiological Degradation

The recognized cumulative exposure threshold associated with concrete degradation is 1E+10 rad. Exposures below this value are considered to have no adverse impact on concrete properties, such as compressive and tensile strengths and specific volume (INEEL/EXT-04-02319, *Literature Review of the Effects of Radiation and Temperature on the Aging of Concrete*).

Potential degradation of the WESF hot cell structural concrete due to radiation exposure has been evaluated. Due to the effect of radioactive decay, it was determined that concrete exposure levels cannot reach the recognized degradation threshold of 1E+10 rads. Because the grout is not relied upon for structural support, potential radiological degradation of the grout is not a concern.

H-A5.3.4 Grout Delivery

Grout will be prepared offsite and trucked to WESF. The grout will be tested to verify grout performance before construction begins. Grout samples will be collected and tested during construction.

A diesel-hydraulic grout pump will be placed on the west side of the truck port entrance with sufficient space to allow two delivery trucks to be located side by side to discharge into the pump. A temporary water supply (hose) will be brought from the fire hydrant southwest of the K3 filter pit to the pumping area. Provisions will be made for construction trailer(s). Electrical power will be required for the trailer(s), supplemental lighting, and heating of equipment for winter work. A portable generator will be required to be used for less than 365 days and will not be permitted as a stationary source. The engine used to power the generator set will meet the existing reciprocating internal combustion engine (RICE) 40 CFR 61, "National Emission Standards for Hazardous Air Pollutants," standards for that engine size.

A temporary partition will be set under the rollup door that is high enough to include a personnel access door as well as a grout piping (slickline) penetration. The rollup door will then be lowered to the top of the partition to enclose the truck port. A combination of slickline and hose will be routed for grout delivery using the following general routing:

- From the grout pump to the operating gallery for stabilizing the K3 duct trench through personnel doors on the north side of WESF
- From the grout pump, through the truck port, and into the service gallery for stabilizing the hot pipe trench and K3 duct
- From the grout pump, through the truck port, and up to the wall penetration for access into the Hot Cell A air lock
- From the grout pump, into the truck port, up through the floor opening into the WESF Canyon, and along the WESF Canyon floor to access hot cells

The piping and hose will remain in place for each route only as long as grout placement in the stabilized areas is required. A slickline will be used for the majority of each route. Temporary restraints will be installed, such as thrust blocks, where the slickline changes directions (such as in the truck port) to maintain piping integrity and protect personnel.

A temporary washout pit will be set up near the grout pump and truck delivery location to contain rinsate from the delivery trucks and grout pump.

H-A5.3.5 Grout Placement

Grouting will begin inside the exhaust duct, downstream of the K3 filter pit and inside the two HEPA filter units, to stop any contamination from escaping through the exhaust system during subsequent grouting.

The general sequence for stabilization grouting of the Hot Cells A through F DWMU is as follows:

- K3 filter pit (not part of TSD)
- K3 duct and trench (not part of TSD)

- Hot pipe trench (not part of TSD)
- Hot Cell A air lock (not part of TSD)
- Hot cells

To minimize cracking for stabilization, the lift depth will be limited to approximately 0.9 m (3 ft). This limitation will also allow placement of the next lift the following day.

Grout will be distributed from the grout pump set up outside the truck port via 12.7 cm (5 in.) slickline piping to the vicinity of the grout fill location. The final short section will use either hose or slickline. Thrust blocks will be used at abrupt changes in piping direction. Valves will be used at the fill connections to enable quick shutoff of grout once the volume is filled.

As the grout flows into placement locations, air will be displaced by the grout. Displaced air will contain water vapor and will be radioactively contaminated. Portable ventilation systems will be used to collect and filter the displaced air. The portable ventilation systems for placement of the grout into the hot cells and Hot Cell A air lock will discharge through the K3N exhaust system.

H-A5.3.6 K3 Filter Pit and Duct from Hot Cell G to K3 Inlet Valves

This step fills the 50.8 cm (20 in.) diameter K3 duct from the downstream HEPA filter connection in Hot Cell G to the inlet valves in the K3 filter pit. Grout is placed and vented through a fabricated cover over the 45.7 cm (18 in.) duct near the floor level in the truck port. The 45.7 cm (18 in.) duct above the truck port floor will have been removed during installation of the K-3N exhauster. The grout will be placed in one lift. See Figure H-A7 for stabilized volume at the completion of this step. Estimated grout volume is 7 yd^3.

Additional Prerequisites:

1. Provide cover for 45.7 cm (18 in.) duct in truck port that has fixtures for grout fill and a vent.
2. Remove HEPA filter and damper from downstream ventilation outlet in Hot Cell G, and install an inflatable plug to block the flow of grout from the fill point.
3. Provide vent filter at upstream HEPA filter outlet connection in Hot Cell G to collect any leakage past the inflatable seal located at the other HEPA filter outlet connection.

Grout Fill and Vent Locations:

1. Install vent fixture for portable exhauster in the cover plate.
2. Install fill connection fixture in the cover plate in the truck port. The fixture will attach to the cover plate and connect to the slickline or placement hose using a gate or knife valve.
3. Remove HEPA filter and damper in Hot Cell G, and install HEPA filter sized for the air and moisture flow that also will ensure contaminants are captured at the source.

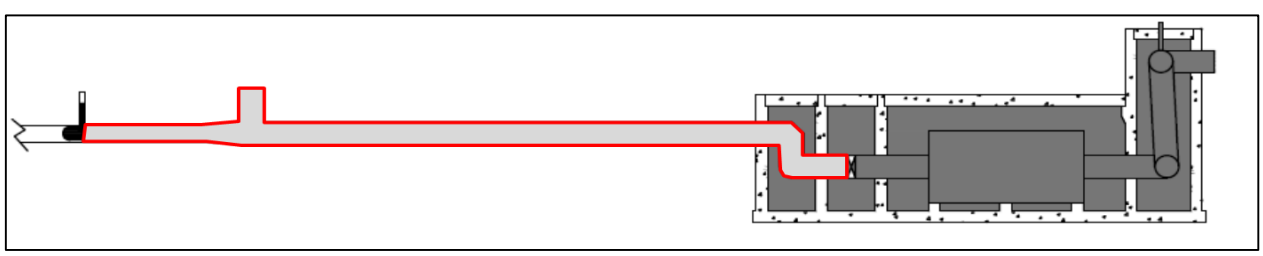

Figure H-A7. K3 Duct from G Cell to Inlet Valves

H-A5.3.7 K3 Duct and Trench under Hot Cells

The K3 duct under the hot cells and the trench that surrounds the K3 duct that extends under all the hot cells must be stabilized with grout prior to the hot cells being stabilized to maintain structural integrity of the building.

Prerequisite Activities:

1. Remove vent connection in Hot Cell G, and install grout fill connection.
2. Core drill one hole through shield from operating gallery side of hot cells near the midpoint of the operating gallery (Figure H-A8). It must be located to allow clearance for grout fill piping that will enter the operating gallery from the office area (north side) and to allow access to electrical panels.
3. Fabricate fixture to connect fill piping and venting through same core drill hole (see Figure H-A9 for design concept). The fixture will be filled with grout once the trench is filled and left in place.
4. Open air exhaust dampers in Hot Cells A through F to provide venting during grout placement.
5. Seal damper penetrations using gasketed metal covers anchored to the shield wall on the operating gallery side of the hot cell shield wall to ensure that grout cannot escape.
6. Install confinement enclosure over fill/vent fixture to ensure that contamination does not spread to operating gallery.

Fill Sequence:

1. Fill the K3 duct through the fill connection in the “upstream” pipe in Hot Cell G, completely filling it until grout rises through the vertical pipes in each hot cell. Estimated grout volume is 7 yd^3.
2. Fill the K3 duct trench through the fill and vent fixture at the core drill hole in the operating gallery.

H-A5.3.8 Hot Pipe Trench

After completion of the grouting activities involving the K3 duct and trench under the hot cells, the hot pipe trench under the hot cells must be filled from Hot Cell G to the B Plant boundary east of Hot Cell A. This work must be done before the hot cells can be stabilized to maintain structural integrity of the building. Due to congested conditions in the hot pipe trench with piping and supports, grout pump discharge pressure will be the indication of complete filling since volume calculations will be inaccurate. The estimated grout volume is 17 yd^3 to fill the voids completely.

Core drilling through the service gallery shield wall will be required. A wet core drill with a vacuum attachment, water collection ring, and wastewater collection system will be used to minimize dust generated during concrete core drilling. The estimated grout volume for the hot pipe trench is 36 yd^3.

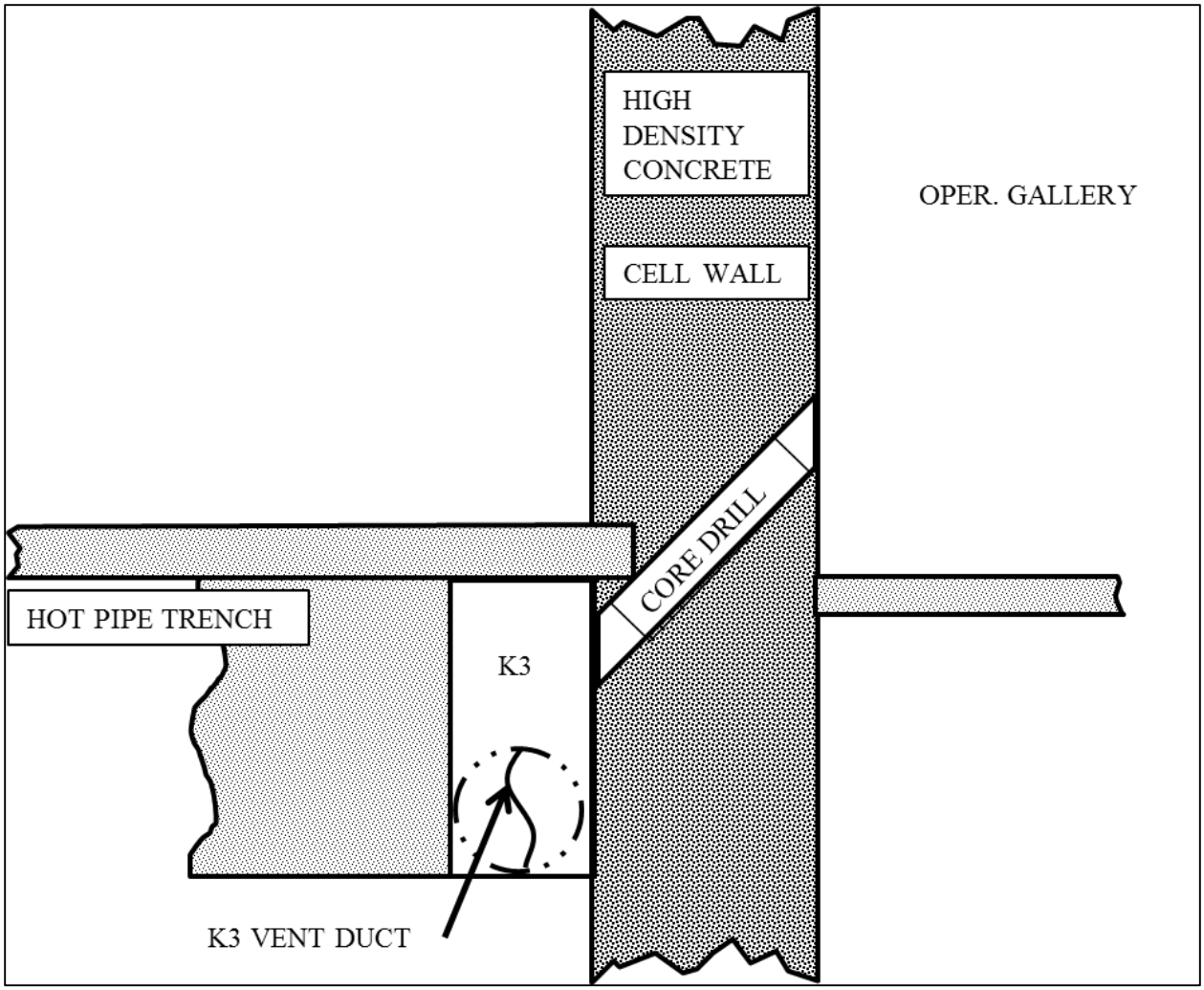

Figure H-A8. K3 Trench Access for Grouting

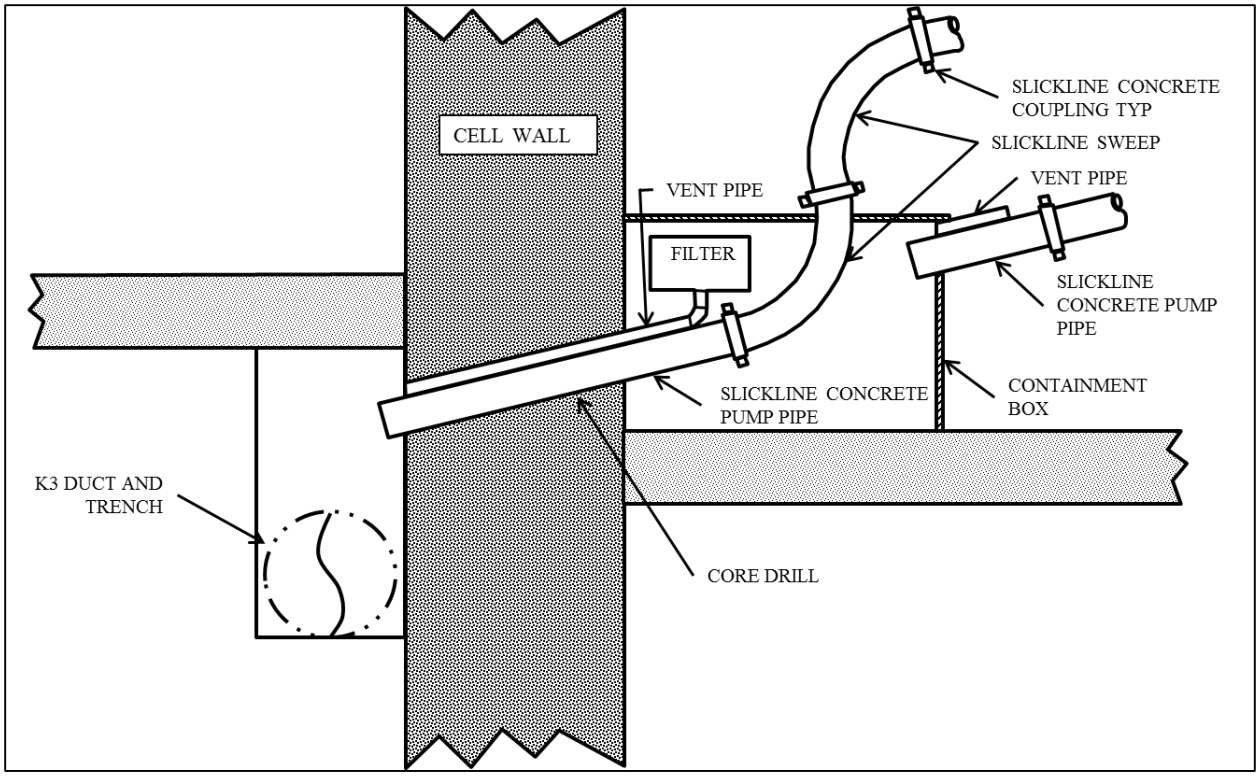

Figure H-A9. Operating Gallery Fill/Vent Fixture

Prerequisite Activities:

1. Core drill under Hot Cells B, C, D, E, and F from the service gallery side and one in the floor of the Hot Manipulator Shop over the hot pipe trench (6 total). See Figures H-A10 and H-A11 for core drill hole configurations.

2. Design and fabricate the fixture to connect grout fill and venting through the same core drill hole. It must be attached to the service gallery wall or to the floor in the Hot Manipulator Shop to preclude pressure surges from the grout pump breaking the fill connection. See Figure H-A9 for design concept. The fixture will be filled with grout after the hot pipe trench is filled at that location and left in place.

3. Fabricate and install a metal cover over the lead shielding that is against shield wall in the service gallery (column D.5/4.5). The shielding is in place to cover a hot spot that resulted from migration of cesium from the D/E cells through holes in the D/E cell floor liner. The liner was repaired in 1980. The metal cover will ensure that no grout escapes when grouting Hot Cell D/E.

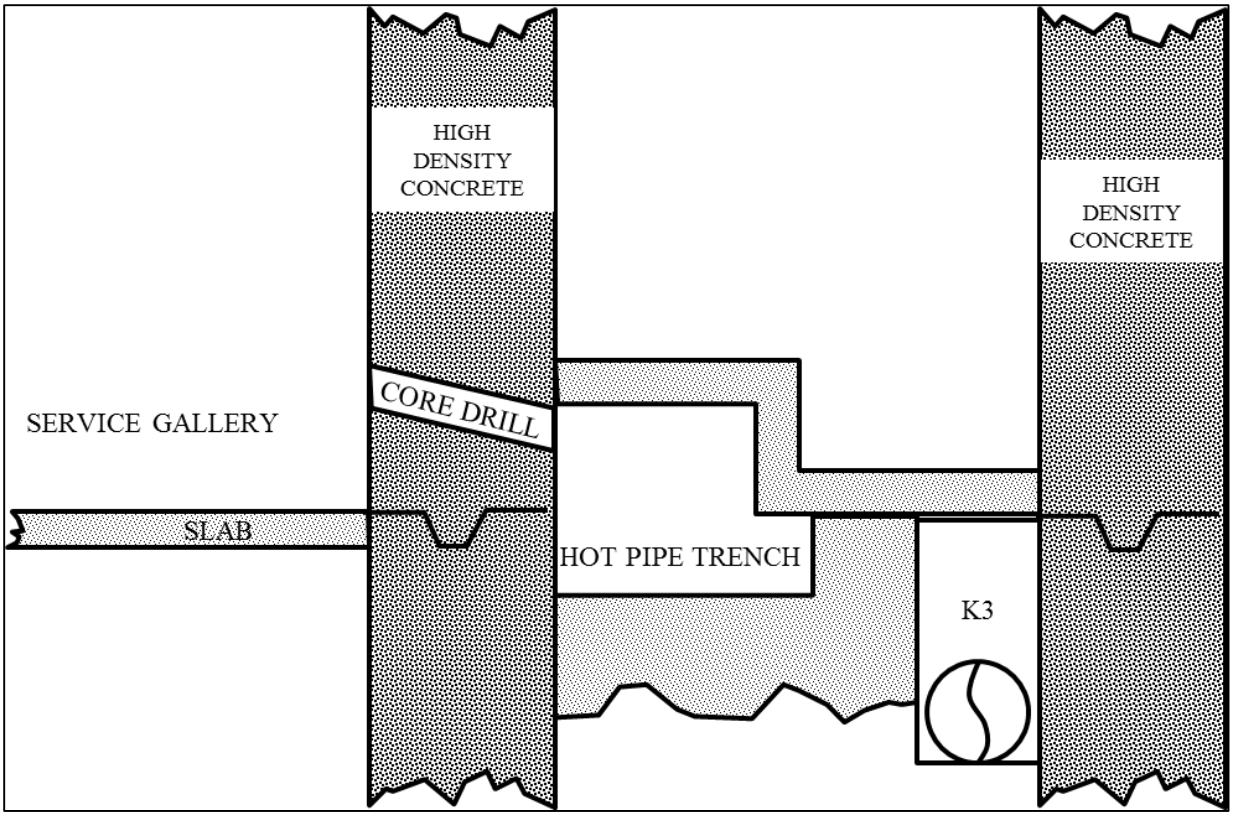

Figure H-A10. Hot Pipe Trench Core Drills Under Hot Cells B, C, and F

Fill Sequence:

1. Pump through the grout fill port at the Hot Cell B location until high pressure is reached on the pump. It is quite possible that most of the lower parts of the hot pipe trench will be grouted at this point with subsequent fill locations "topping off" the placement to maximize the fill volume.
2. Pump through the grout fill port in the floor of the Hot Manipulator Shop to ensure that the hot pipe trench is full of grout all the way to B Plant. The B Plant side is sealed, and a support plate near the B Plant interface is an adequate dam for the grout.
3. Pump through the grout fill port at the Hot Cell C location until high pressure is reached on the pump.
4. Pump through the grout fill port at the Hot Cell D location until high pressure is reached on the pump.
5. Pump through the grout fill port at the Hot Cell E location until high pressure is reached on the pump.
6. Pump through the grout fill port at the Hot Cell F location until high pressure is reached on the pump.
7. Fill the metal enclosure that surrounds the lead shielding in the service gallery with grout.

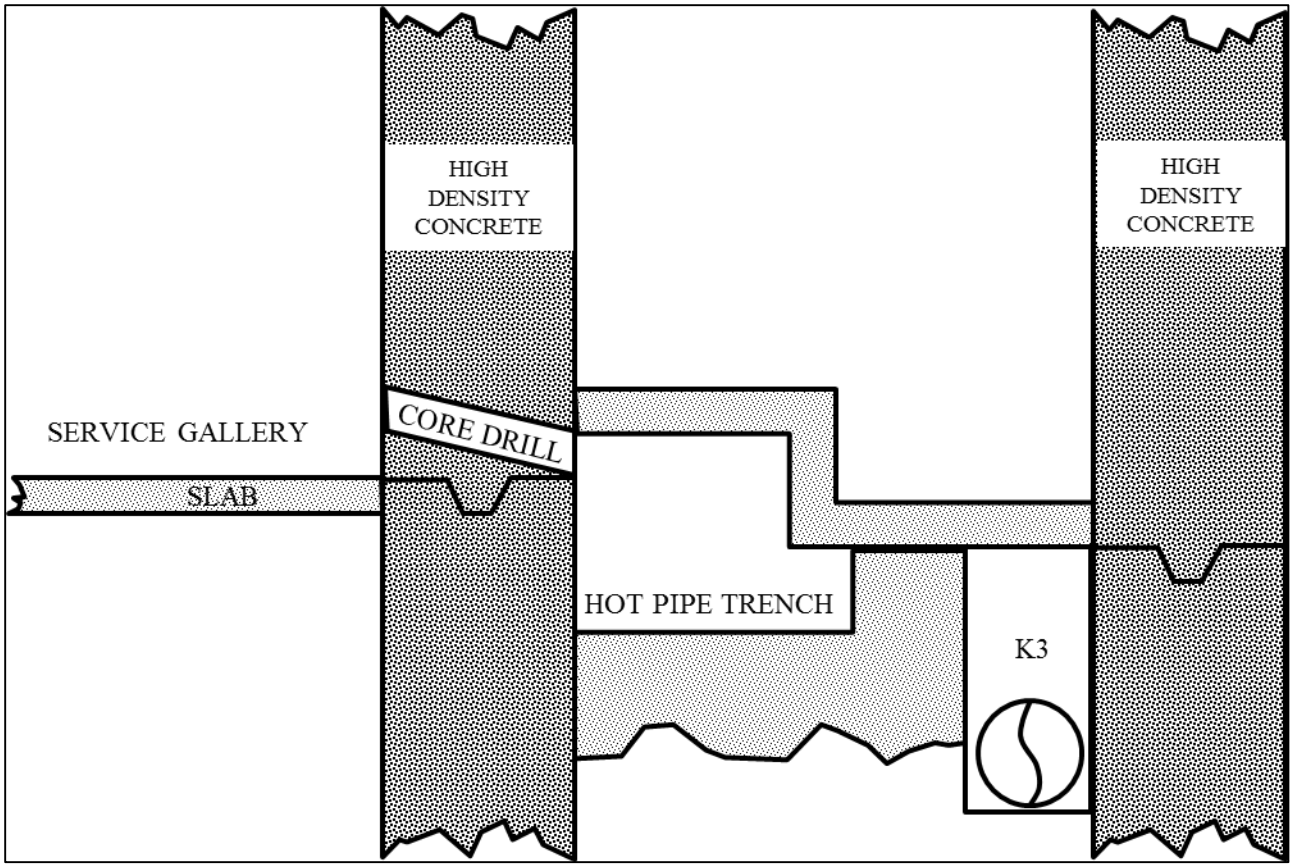

Figure H-A11. Hot Pipe Trench Core Drills Under Hot Cells D and E

H-A5.3.9 Hot Cell A Air Lock

The Hot Cell A air lock must be grouted in its entirety to preclude the spread of contamination from Hot Cell A and to encapsulate any contamination in the air lock. A shield door from Hot Cell A that opens into the air lock is presently closed. However, it is not known if the door will remain closed if Hot Cell A was stabilized prior to filling the air lock with grout. The air lock must receive at least one lift of grout before Hot Cell A stabilization can precede.

Access for grout piping will be through the truck port outside the rollup door and then through the air lock between the truck port and the service gallery. A partition wall will be designed and fabricated for installation across the truck port outside doorway that will have a personnel access and egress door and a blockout for grout piping. The rollup door will be lowered to the top of the partition to provide a pressure boundary for confinement to minimize airflow into WESF and to help maintain optimal ventilation operations. The estimated grout volume for the Hot Cell A air lock is 63 yd^3.

Prerequisite Activities:

1. Complete two core drills holes from the service gallery as close to the ceiling as possible. One will be used for grout fill, and the other will be for active ventilation through a portable exhauster.

2. Seal the door between the service gallery and the air lock by attaching a steel plate to the doorjambs or the surrounding concrete.

3. Fabricate the fixture for attaching the grout fill piping and hose.
4. Fabricate a partition to cover the lower part of the truck port west side opening that will contain a personnel door and a blockout for grout piping.

Fill Sequence:

Pump through the grout fill port in the service gallery, and place in lifts of about 0.9 m (3 ft) each. The filling will require five lifts.

H-A5.3.10 Hot Cells

Hot Cells A through F must be stabilized by filling each to the underside of the cover blocks with grout. Hot Cell G will remain operable once grouting is completed. The hot cells contain tanks and other equipment along with piping and conduit. The hot cells are highly contaminated with byproducts of Cs/Sr encapsulation. Some equipment has been placed in the hot cells as the cell contents were dismantled. Remote manipulators have been removed in all cells except for Hot Cells F and G. Buoyancy concerns during grouting are addressed in Section H-A5.3.11.

Each hot cell has a viewing window on the operating gallery side that must be protected to ensure that there is no breach by liquid grout during the placement process. Protection of the windows is addressed in Section H-A5.3.12.

Numerous penetrations through the shield walls into the operating gallery and service gallery must be sealed to prevent leakage of contaminated grout. A combination of cover plates and mastic material will be employed for this purpose. Pass-throughs from Hot Cell F to Hot Cell G and Hot Cell F to the service gallery will require special consideration for sealing.

The hot cells will be filled and actively vented using the existing ventilation inlet ports. Each hot cell has two inlet ports, each of which has a damper (butterfly valve) and HEPA filter, located in the canyon above the hot cells. For each hot cell, one of these ports will be modified for grout fill and the other for venting, using a local, filtered exhauster for control of contamination. Each cell will be filled in lifts not to exceed 0.9 m (3 ft) in depth. Access to the WESF Canyon for grout piping will be through the truck port temporary partition and up through the access opening in the canyon floor. The access opening will require installation of a temporary steel plate to re-establish a ventilation confinement boundary.

Sequencing of hot cell stabilization will be finalized with the grouting contractor. Each cell could have a lift placed in turn, or one cell can be filled before moving on to the adjacent one. The main determinant in the preferred sequence is the method of handling and cleaning of the slickline piping in the canyon. Estimated grout volumes are listed in Table H-A2.

Table H-A2. Estimated Hot Cell Grout Volume

Hot Cell	Total Grout Volume (yd^3)
A	42
B	31
C	31
D and E	74
F	36

Prerequisite Activities:

1. Remove existing HEPA filter and isolation valve on grout fill and vent ports (existing inlet air ducting) at flange connector. Use crane to remove and dispose of them. Install blank over one vent port in Hot Cell D and one in Hot Cell E. Use a "rabbit" (foam ball) with water to clean the inside of the piping from the canyon into each hot cell to remove surface contamination. Install cap until cell is connected for grout placement.
2. Fabricate fixtures for grout fill and separate vent. Install portable exhausters discussed in Section H-A3.4.9 to keep hot cells at negative pressure relative to canyon during grout placement.
3. Install grout piping manifold into canyon with configuration based on grouting contractor method of performance. The overhead crane will be required for this work.
4. Seal penetrations through shield walls on outside surfaces of hot cells using a combination of closure plates and a mastic-type sealant.
5. Seal Hot Cell F pass-through to service gallery and Hot Cell F to Hot Cell G pass-through by applying a sealant to the door and then installing metal straps across the doors that are anchored to the wall on either side of the door.
6. Remove contaminated oil from viewing windows through drain in operating gallery.
7. Install additional gasketed steel plate on the outside of viewing windows that is anchored to the shield wall.

Fill Sequence:

Each hot cell will start with a 0.9 m (3 ft) lift of grout to fix any buoyant vessels and loose items (see Section H-A5.3.11 for more detail). Subsequent lifts will be no more than 0.9 m (3 ft) each. After a lift is placed in one cell, the grouting can move to the next cell until all have received the same lift. Alternatively, each hot cell can be completely filled before moving to the adjacent one.

H-A5.3.11 Buoyant Vessels

None of the hot cell tanks is considered buoyant. Items that are not attached to the floor or walls of the hot cells may become buoyant during grouting of the hot cells. These items include the "boats" in the Hot Cell B furnace, HEPA filters in Hot Cells B and F, open-top rectangular tank in Hot Cell F, and miscellaneous loose items within the hot cells. However, the grout formulation and grouting procedure will address debris of this nature.

The approach to grout placement will be to use a first lift that is less than 0.9 m (3 ft) thick and of a slurry consistency to allow the grout to flow around all fixed objects. This first lift will be allowed sufficient time to harden before placing the next lift. Any objects that floated up with the grout will be bonded in the top surface, depending on displacement of the object. Tanks will have enough surface area in contact with the grout to develop a bond that will keep them in place when the next lift is placed. Hoses and HEPA filters will be bonded to the first lift because of their large surface area and light weight.

H-A5.3.12 Hot Cell Viewing Window Protection

Each hot cell has a viewing window consisting of multiple sections of glass (tempered and leaded) separated by inner sections of oil to provide operator shielding. The oil must be removed before sealing the window at each cell. The total volume of oil between the panes of glass in each window is

approximately 30.3 L (8 gal). The gap remaining after the oil is removed is approximately 0.64 cm (0.25 in.) between each pane.

A steel plate will be attached to the outside of the shield wall in the operating gallery that covers the entire viewing window. It will extend far enough to use concrete anchors to hold it in place. A gasket will be used between the plate and the wall to ensure that contaminated grout will not breach the windows.

The grout lift heights inside each hot cell will be adjusted to ensure that the upper elevation of the grout lift occurs near the top of the window to reduce hydrostatic pressure on the window.

H-A5.3.13 Control of Contamination During Grouting

As the grout flows into placement locations, air, water vapor, and contaminants may be released through the vent locations. Contamination will be controlled by means of active ventilation with portable exhausters at specified locations. Active ventilation will allow air movement to be controlled throughout all phases of the project.

H-A5.3.14 K3 Duct

- **Filter Pit and HEPA Box Location.** The portable exhauster is to be attached to the 10.2 cm (4 in.) pipe protruding through the K3 filter pit parapet cover block before attaching the fill fixture to the 20.3 cm (8 in.) pipe on the east side of the parapet in order to provide negative pressure.

- **Truck Port Location.** A fill/vent combination fixture will be fabricated for the 45.7 cm (18 in.) duct in the truck port. This should be installed when the K3 duct is dismantled in the truck port. A portable exhauster will be placed in the truck port while the duct is being grouted.

- **G Cell Location.** The grout poured into the 15.2 cm (6 in.) K3 duct from Hot Cell G will be vented through the 15.2 cm (6 in.) HEPA units in each of the hot cells. The portable exhausters hooked into each of the hot cells will provide ventilation for this step in the grouting process.

H-A5.3.15 K3 Duct Trench

- **Operating Gallery.** One core drill through the operating gallery wall will be a combination fill/vent location. A portable exhauster will be located in the operating gallery to vent this location.

H-A5.3.16 Hot Pipe Trench

- **Service Gallery.** Five core drill holes will be made in the wall of the service gallery. Each of these penetrations through the service gallery wall will have a combined fill and vent fixture installed and will be actively vented with a portable exhauster.

- **Hot Manipulator Shop.** One core drill in the floor of the Hot Manipulator Shop also will require a portable exhauster.

H-A5.3.17 Hot Cell A Air Lock

- **Service Gallery.** Core drill holes near the ceiling of the Hot Cell A air lock from the service gallery will be required. The portable exhauster for this step will be located in the service gallery.

H-A5.3.18 Hot Cells

- **Vent and Fill Locations in the Canyon.** The hot cells (6 total) will require portable ventilation exhausters located in the canyon. The model AP-1000 weighs 225 lb, so it will need to be lifted into the canyon with the overhead crane through the truck port cover block.

H-A5.4 Removal of Wastes and Waste Residues

Hot Cells A through F contain materials and equipment used during packaging of the Cs/Sr capsules (see Section H-A3.4, "Unit Description," for details of cell contents). In preparation for facility layup, a series of demineralized water flushes was performed in all of the in-cell jumpers and tanks. Chemical flushing was done in an effort to remove residual solids, and the tanks were again flushed with demineralized water.

The tank system was flushed, removing all waste possible with normal means, before enactment of RCRA. Therefore, the tanks are not subject to Subtitle C regulations and are classified as debris.

Cs/Sr salts have been analyzed to estimate impurities. The analysis performed identified possible dangerous waste designations of barium (D005), cadmium (D006), chromium (D007), lead (D008), and silver (D011). Tables H-A3 through H-A5 provide the analytical data of Cs/Sr salts.

Radiation hazards posed to personnel prevent the sampling and removal of cell contents; therefore, sampling will not be performed to quantify dangerous waste contamination. As a result, the remaining material and equipment will be conservatively designated as hazardous debris.

Following facility layup, jumpers were removed from the tanks resulting in tank openings for grout filling.

The Hot Cell B furnace contains four "boats" with approximately 0.6 kg (1.3 lb) of floor sweeping. Hot Cell C contains two threaded and capped pipes with approximately 1.2 kg (2.6 lb) of strontium fluoride floor sweepings. The pipes are located on the southeast corner of the cell on wall brackets above the bench floor. The waste remaining in the "boats" and pipes was generated prior to the effective date of RCRA on the Hanford Site; however, the waste is being conservatively dealt with as a hazardous waste to establish closure performance standards.

DOE-RL will be submitting to the Department of Ecology a petition for a site-specific variance from applicable land disposal restriction (LDR) treatment standards in accordance with 40 CFR 268.44(h)(2) for specific waste items in Hot Cells B and C at WESF. These waste items hold 0.6 kg and 1.2 kg of floor sweeping from past cleanup activities in the cells. The floor sweepings contain strontium fluoride and processing debris, including metal shavings, and other miscellaneous waste material produced during operations of the hot cells. Ordinarily, the treatment standards for these forms of waste is a specific type of stabilization called microencapsulation. Microencapsulation is the stabilization of the waste material itself by the addition of a Portland cement or lime/pozzolanic material, which reduces the leachability of contaminants from the waste. The microencapsulation treatment of the waste would then be followed by sampling and analysis of the stabilized waste to make the determination that LDR treatment standards have been accomplished.

However, treatment by microencapsulation would require intrusive activities, increasing exposure to workers, the generation of a significant amount of additional waste requiring treatment, and a potential risk of environmental exposure. In addition, the radiological and physical characteristics of the waste items prevent them from undergoing final analytical testing to verify LDR treatment standards have been achieved. Treatment and verification of treatment by the usual methods of microencapsulation would cause potential exposure to workers, provide potential for environmental exposure, and fail to demonstrate LDR treatment.

A variance from the required LDR treatment standards is being requested to allow stabilization via in-cell macroencapsulation during the grouting of the hot cells. Macroencapsulation is the application of a surface coating material such as polymeric organics (e.g., resins and plastics) or inert inorganic materials (e.g., Portland cement) that would encase the entire waste items rather than treat the interior waste such as in microencapsulation, substantially reducing surface exposure to potential leaching of contaminants.

Portland cement would be used to encase the entire waste items within the cell. The macroencapsulated waste would be left intact at the WESF facility during an interim closure period. By treating the waste via macroencapsulation in WESF cells, leachability of contaminants is reduced, radiological exposure to workers is minimized, and transportation to another facility is not required. The requested petition will outline the justification and protectiveness of this treatment for these waste items at the WESF hot cells.

During final facility removal, the stabilized waste and waste residues associated with the Hot Cells A through F DWMU will be removed and managed as newly generated hazardous debris. Grouted Hot Cells B and C can be removed using standard demolition equipment such as a diamond wire saw and excavators in large sections and transported for disposal in an approved disposal facility. Treatment standards for the newly generated hazardous debris will be the Alternative Debris Standards for hazardous debris (40 CFR 268.45, "Treatment Standards for Hazardous Debris," Table 1, "Alternative Treatment Standards for Hazardous Debris") incorporated into WAC 173-303-140, "Land Disposal Restrictions," by reference. Additional detail on the newly generated waste is covered in Section H-A5.66.

Impurities in the cesium salt are estimated as listed in PNL-5170, *A Review of Safety Issues that Pertain to the Use of WESF Cesium Chloride Capsules in an Irradiator*. Table H-A3 data were taken on cesium feed solution and salt analyzed for corrosion analysis. Concentrations are listed as weight percent solids. The silver concentration was not estimated but was added from process knowledge; therefore, it is not listed in the following tables.

Table H-A3. Impurities in Cesium Feed Solution and Salt

Element	Cesium Feed Solution (Wt%)	Salt Analysis (Wt%)
Al	1.7	0.14
B	--	0.14
Ba	0.94	0.55
Ca	1.0	--
Cd	--	0.02
Co	--	0.1
Cr	0.27	1.4
Fe	0.38	--
K	0.79	0.68
Mg	0.25	0.68
Na	0.70	2.8
Ni	0.33	0.1
Pb	1.4	0.14
Rb	0.52	--
Si	7	0.21
Sr	0.18	0.02
Ti	--	0.02
Zn	--	0.03

Impurities in the cesium salts wasted at Oak Ridge are listed in HNF-2928, *Certification That CsCl Powder and Pellet Materials Meet WESF Acceptance Criteria*. Concentrations are listed in Table H-A4 by weight percent.

Table H-A4. Impurities in Cesium Salts Wasted at Oak Ridge

Element	Wt%
Al	0.68
B	5.17
Ba	2.98
Ca	0.68
Cu	0.02
Fe	0.04
D	1.21
Mg	0.04
Mo	0.009
Na	7.76
Ni	0.01
Si	2.59
Sr	0.01
Zn	0.03

The encapsulated cesium chloride salt contains dangerous waste chemical impurities from the fractionation process consisting of lead, barium, chromium, cadmium, and silver. Barium is generated continuously as a result of the cesium-137 decay chain.

Impurities in the strontium salt are estimated as listed in BNWL-1967, *The Containment of* $^{90}SrF_2$ *at 800°C to 1100°C Preliminary Results*. Table H-A5 data are estimates based on process flowsheet information. The concentrations are listed in weight percent.

Table H-A5. Impurities in Strontium Salt

Element	Probable Concentration (Wt%)
Al	<0.5
Ba	0.1-2.0
Ca	<0.1
Cd	<0.2
Cr	<0.1
Cu	<0.1
Fe	<0.01
H	<0.1
K	0.05-0.5
Mg	<0.1
Mg	<0.1
Mn	<0.01

Table H-A5. Impurities in Strontium Salt

Element	Probable Concentration (Wt%)
N	1-4
Na	<0.1
Ni	<0.05
Pb	<0.2
R (as in Rare Earths)	<2.0
Si	<0.02

The encapsulated strontium fluoride salt contains dangerous waste chemical impurities from the fractionization process consisting of barium, lead, cadmium, chromium, and silver.

H-A5.5 Removal of Unit, Parts, Equipment, Piping, Containment Structure, and Other Ancillary Equipment

Process and service piping is embedded in the concrete walls of each hot cell. The pipes connect the cells to each other, as well as to the hot pipe trench, transmitter rooms, AMU area, service gallery, operating gallery, manipulator repair shop, truck port, and Tank TK-100. Spare piping is provided between all areas and the hot cells. All parts, equipment, and piping will remain in place.

Upon completion of the encapsulation activity, hot cell components not required for storing the capsules or managing the legacy contamination were shut down. Shutdown involved equipment cleanout, equipment isolation or removal, jumper removal, nozzle blanking, cerium window refurbishment, and instrumentation deactivation.

The water sources to Hot Cells A through F have been isolated, and the manipulators have been removed from Hot Cells A through E. The isolated water source piping will remain in place.

The confinement ventilation system for the hot cells remains operational, and electrical power remains available to the hot cells.

Isolation of the K1 exhaust system from the old K3 exhaust system will take place prior to stabilization of the Hot Cells A through F. Some of the key pre-stabilization tasks include isolating the K3 filter pit, removing and blanking ducting between the 225-BB K3 filter pit building and the existing stack, and removing and isolating existing ducting in the truck port. These actions prevent flow through the existing K3 duct.

Drain lines from the K3 filter pits (2 in. RLW-IW-M9 and 2 in. RLW-IE-M9) to Tank TK-100 will be isolated as well.

Additional details of the prerequisite activities are covered in Section H-A5.33, “Stabilization.”

H-A5.6 Identifying and Managing Waste Generated During Closure

The closure activities for WESF had identified three waste streams that will require management and disposal: oil for the hot cell viewing window, excess grout generated during grouting activities, and hazardous debris resulting from demolition during final closure of WESF.

H-A5.6.1 Oil from Hot Cell Viewing Windows

Each hot cell has a viewing window consisting of multiple sections of glass (tempered and leaded), separated by an inner section of oil to provide operator shielding. The oil is considered contaminated and must be removed using a drainage valve before sealing the window at each cell. The oil will be managed using the WESF waste profile processes and transported to an approved disposal facility for disposal.

H-A5.6.2 Excess Grout

Grout that does not meet specification requirements and grout remaining in a delivery truck when a particular grouting operation is completed will most likely be generated during closure activities. This out-of-specification or excess grout will be managed and disposed at an approved disposal site as newly generated waste.

H-A5.6.3 Hazardous Debris

Hazardous debris generated from demolition will be packaged onsite at WESF and transported to an approved facility for disposal. Specifically, the waste generated by this project will be managed using the WESF waste profile processes and generated during final closure of WESF under the pool cells and Hot Cell G closure plan.

The Alternative Debris Standard defined in Table 1 of 40 CFR 268.45 is an approved method for stabilization of hazardous contaminants to reduce the leachability of the hazardous constituents and will be used as the dangerous waste constituent treatment standard for this project. The specific alternative debris standard that will be used is the Immobilization Technology of macroencapsulation stabilization of the debris using an ASTMC150, Type II Portland cement with incorporated fly ash. The incorporation of fly ash into the cement will help in a reduction of heat of hydration and lower temperature increases during curing, increased workability and flowability/consistency of the grout, increased chemical stability of the grout, and minimization of contaminant mobility (e.g., potential for leaching).

H-A5.7 Identifying and Managing Contaminated Environmental Media

Contaminated environmental media would include contaminated soil discovered during sampling for clean closure. All waste removed during final closure of the entire WESF facility will be considered newly generated decontamination and decommissioning (D&D) debris and is covered in Section H-A5.34, “Removal of Wastes and Waste Residues.”

H-A5.8 Confirming Clean Closure

Clean closure will be performed by removal of the entire WESF facility by deactivation and demolition practices similar to other facility removals previously on the Hanford Site. Final clean closure of WESF will be detailed in the closure plan for the pool cells and Hot Cell G DWMU. Sampling of the underlying soil will be performed to confirm clean closure of the area after removal. Sampling and analysis will be covered in the pool cell and Hot Cell G DWMU closure plan during final disposition of WESF.

H-A5.9 Sampling and Analysis Plan and Constituents to be Analyzed

Due to the legacy radiological contamination within the hot cells, personnel entrance into the hot cells is not feasible. Therefore, sampling of the remaining equipment, classified as hazardous debris, and the four “boats” and two pipes will not be performed under the closure activities outlined in this closure plan.

Sampling and analysis of the hazardous debris generated from removal of Hot Cells A through F will be performed as part of the closure activities detailed in the pool cells and Hot Cell G DWMU closure plan.

H-A5.9.1 Constituents to Be Analyzed

Analysis of Cs/Sr salts identified possible dangerous waste designations of barium (D005), cadmium (D006), chromium (D007), lead (D008), and silver (D011). Section H-A5.4 provides analytical data of Cs/Sr salts. Since sampling of Hot Cells A through F and the remaining equipment will not be performed, they are being conservatively designated as hazardous debris based on potential residues remaining from salt packaging.

Sampling of hazardous debris generated during removal of WESF will be performed and analyzed using the WESF waste determination process.

H-A5.9.2 Revisions to the Sampling and Analysis Plan and Constituents to be Analyzed

Any revisions to the sampling and analysis plan (SAP) and constituents to be analyzed will be performed under the pool cells and Hot Cell G closure plan. Revisions to the pool cells and Hot Cell G SAP will be submitted as a permit modification in accordance with WAC 173-303-610(3)(b).

H-A5.10 Role of the Independent, Qualified, Registered Professional Engineer

An independent, qualified, registered professional engineer (IQRPE) will be retained to provide certification of the initial closure activities described in this closure plan, as required by WAC 173-303-610(6). The engineer will be responsible for reviewing completed field activities and documents associated with these initial closure activities. At a minimum, field activities and documents reviewed for certification of these closure plan activities would include the following:

- Review of the final design and grout testing plan
- Review of project documentation created during initial closure activities
- Inspection of the stabilized Hot Cells A through F
- Review of the grout testing report
- Review of contaminated environmental debris removal (if applicable)

The engineer will record observations and reviews in a written report that will be retained in the operating record. The resulting report will be used to support the clean closure certification of Hot Cells A through F. Final clean closure certification will be conducted after D&D of Hot Cells A through F and in coordination with closure certification of pool cells and Hot Cell G DWMU.

H-A5.11 Certification of Clean Closure

In accordance with WAC 173-303-610(6), within 60 days of completion of the final closure activities for Hot Cells A through F, a certification that closure activities have been completed in accordance with the specifications in the approved closure plan will be submitted to the Washington State Department of Ecology (Ecology) by registered mail. The certification will be signed by the owner or operator and by an IQRPE.

Upon request by Ecology, the following information will be submitted to support closure certification:

- Field notes and photographs related to closure activities
- A description of any minor deviations from the approved closure plan and justification for these deviations
- Documentation of the final disposition of all dangerous wastes and dangerous waste residues (if applicable), including any unanticipated contaminated environmental media

- Verification of hot cell isolation activities
- Verification that grouting of Hot Cells A through F occurred as planned in the grout sequence
- A summary report that identifies and describes the data reviewed by the IQRPE
- A description of what the DWMU area looks like at completion of closure, including a description of the former unit after closure
- Additional data, as required, by final clean closure of the pool cells and Hot Cell G closure plan

The final clean closure activity for the Hot Cells A through F DWMU will be accomplished through removal of the DWMU, which will be addressed in the pool cells and Hot Cell G DWMU closure plan. Hot Cells A through F clean closure certification will be provided in conjunction with clean closure certification of the pool cells and Hot Cell G DWMU and the entire WESF OUG.

H-A5.12 Conditions that Will Be Achieved When Closure is Complete

Upon completion of the closure activities outlined within this closure plan, the Hot Cells A through F DWMU will be isolated and stabilized with grout. Portions of the current WESF K3 ventilation system, hot pipe trench, Hot Cell A air lock, and K3 duct and trench also will be stabilized with grout.

The operating pool cells and Hot Cell G DWMU will remain functional for continued safe capsule storage. Final clean closure conditions will be identified under the pool cells and Hot Cell G DWMU closure plan.

H-A6 Closure Schedule and Timeframe

A clean closure approach is incorporated into the closure plan for the WESF OUG. Stabilization via grout of Hot Cells A through F is a necessary step to prevent threats to human health and the environment and to support final closure of the WESF OUG.

The Hanford Site has an ongoing need to store Cs/Sr capsules safely and compliantly until a disposal alternative is available. While efforts are underway to implement an alternative method, it is anticipated to be a number of years before the capsules can be safely transferred from WESF to an alternative storage capability.

Continued storage of the capsules at WESF requires that the pool cells and Hot Cell G remain operational until an alternative storage capability is available. This will necessitate an extension to the 180 days to complete closure activities required in WAC 173-303-610(4)(b), and an extension is being requested under WAC 173-303-610(4)(b)(i).

Hot Cells A through F contain a significant amount of legacy radioactive contamination. Stabilization of this contamination with grout will eliminate the potential for a release of this contamination while the Cs/Sr capsules are stored in the WESF pool cells. Additionally, stabilization of the legacy contamination will eliminate the potential for a release to the environment or to the workers when the capsules are transferred out of WESF.

Approval of this closure plan will grant the Hanford Site an extended closure period for performance of the closure activities, in accordance with WAC 173-303-610(4)(b), and a separate extension request will not be filed.

During this extended closure period, the Hanford Site will comply with all applicable requirements of the permit. Additionally, the pool cells and stabilized hot cells will be maintained in a manner that prevents threats to human health and the environment and monitored through routine radiation surveillances, using radiation as an indication of contamination outside the stabilized Hot Cells A through F DWMU.

The closure activities and extended closure period expected durations are outlined in Table H-A6 and Figure H-A12.

Table H-A6. Waste Encapsulation and Stabilization Facility Hot Cells A through F Closure Activities

Closure Activity Description		Expected Duration
Primary Activity	**Secondary Activity**	**Duration**
Prepare Waste Encapsulation and Stabilization Facility	Isolate Utilities	5 months
	Isolate Old K3 Ventilation	
	Drain Window Oil	
	Core Drilling	
Perform grout stabilization	Grout K3 Filter Pit	6 months
	Grout K3 Duct and Trench	
	Grout Hot Pipe Trench	
	Grout Hot Cell A Air Lock	
	Grout Hot Cells A through F	
Submit to Ecology a status report of the Hot Cells A through F stabilization project		1 month
Complete Closure Activity Verification by independent qualified registered professional engineer		2 months
Extend closure period to finalize clean closure with pool cells and Hot Cell G dangerous waste management unit activities		Continued through completion of final clean closure activities
Submit final Clean Closure Certification		60 days post final clean closure activities under pool cells and Hot Cell G closure plan

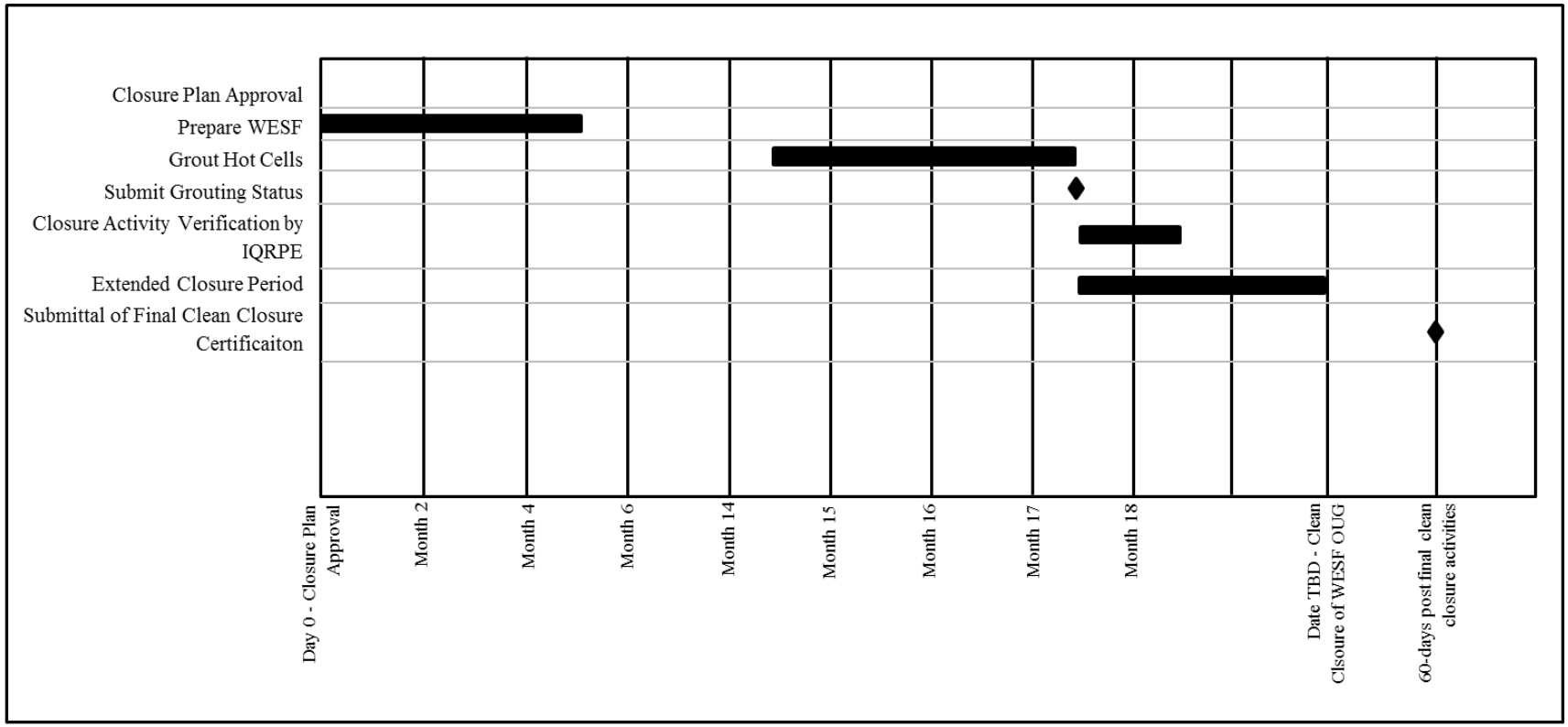

IQRPE = independent, qualified, registered Professional Engineer

Figure H-A12. Waste Encapsulation and Stabilization Facility Hot Cells A through F Closure Plan Schedule

H-A7 Cost of Closure

An annual report outlining updated projections of anticipated closure costs for the Hanford Facility TSD units having final status is not required per Permit Condition II.H.

H-A8 References

40 CFR 61, "National Emission Standards for Hazardous Air Pollutants," *Code of Federal Regulations*. Available at: http://www.gpo.gov/fdsys/pkg/CFR-2010-title40-vol8/xml/CFR-2010-title40-vol8-part61.xml.

40 CFR 268.44, "Land Disposal Restrictions," "Variance from a Treatment Standard," *Code of Federal Regulations*. Available at: http://www.gpo.gov/fdsys/pkg/CFR-2010-title40-vol26/xml/CFR-2010-title40-vol26-sec268-44.xml.

40 CFR 268.45, "Land Disposal Restrictions," "Treatment Standards for Hazardous Debris," *Code of Federal Regulations*. Available at: http://www.gpo.gov/fdsys/pkg/CFR-2010-title40-vol26/xml/CFR-2010-title40-vol26-sec268-45.xml.

BNWL-1967, 1975, *The Containment of $^{90}SrF_2$ at 800°C to 1100°C Preliminary Results*, Battelle Pacific Northwest Laboratories, Richland, Washington.

DOE/RL-2012-47, 2013, *Mission Needs Statement for the Management of the Cesium and Strontium Capsules*, Rev. 0, U.S. Department of Energy, Richland, Washington.

HNF-2928, 1998, *Certification That CsCl Powder and Pellet Materials Meet WESF Acceptance Criteria*, Rev. 0, BWHC, Richland, Washington.

INEEL/EXT-04-02319, 2004, *Literature Review of the Effects of Radiation and Temperature on the Aging of Concrete*, Idaho National Engineering and Environmental Laboratory, Idaho Falls, Idaho. Available at: http://www.inl.gov/technicalpublications/documents/2906947.pdf.

PNL-5170, 1984, *A Review of Safety Issues that Pertain to the Use of WESF Cesium Chloride Capsules in an Irradiator*, Pacific Northwest Laboratory, Richland, Washington. Available at: http://www.osti.gov/scitech/servlets/purl/6656409.

42 USC 6901, et seq., *Resource Conservation and Recovery Act of 1976*, Available at: http://www.epa.gov/epawaste/inforesources/online/index.htm.

WAC 173-303-140, "Dangerous Waste Regulations," "Land Disposal Restrictions," *Washington Administrative Code*, Olympia, Washington. Available at: http://apps.leg.wa.gov/WAC/default.aspx?cite=173-303-140.

WAC 173-303-610, "Dangerous Waste Regulations," "Closure and Post-Closure," *Washington Administrative Code*, Olympia, Washington. Available at: http://apps.leg.wa.gov/WAC/default.aspx?cite=173-303-610.