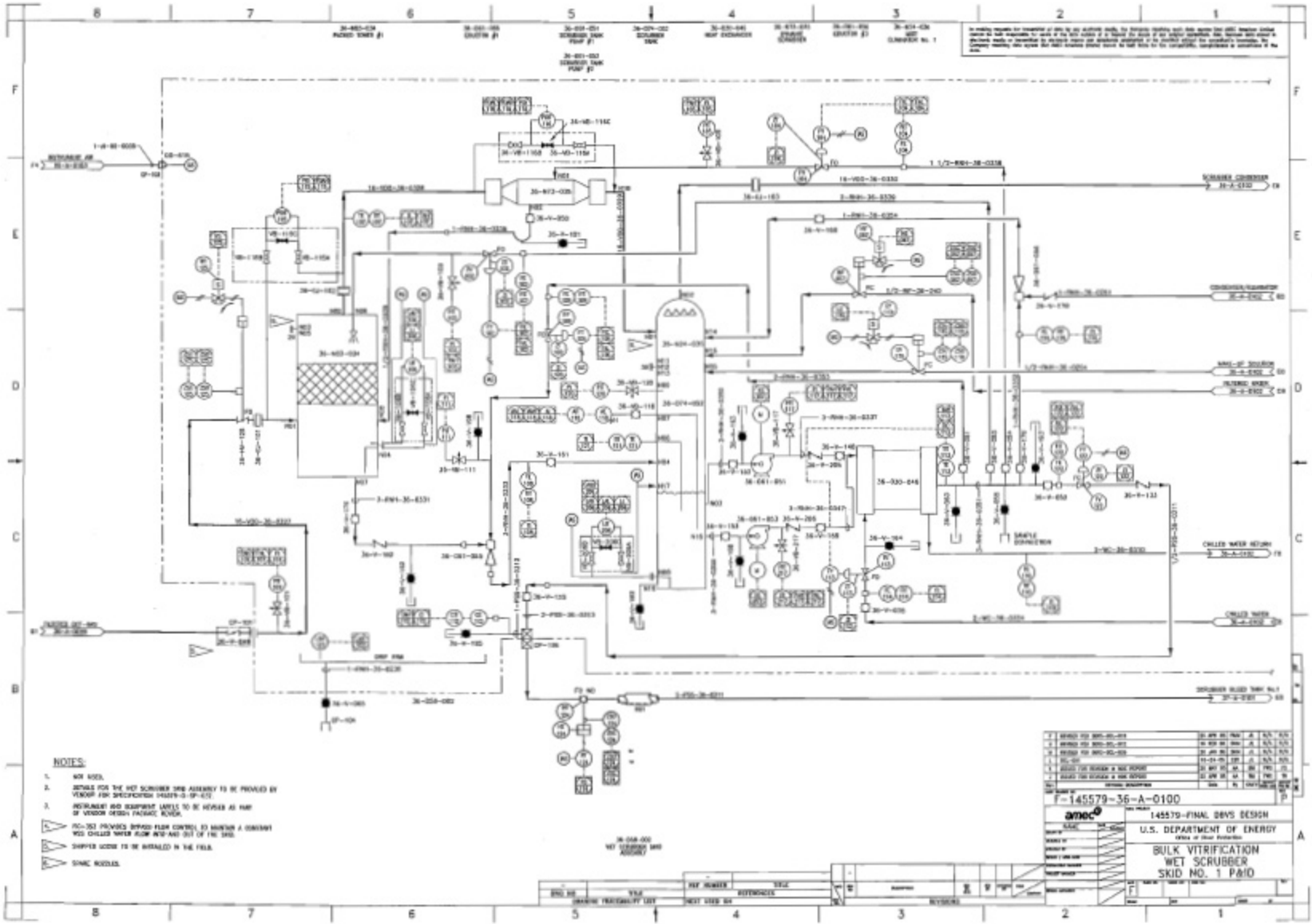
NOTES:
1. NOT USED.
2. DETAILS FOR THE WET SCRUBBER SKID ASSEMBLY TO BE PROVIDED BY VENDOR FOR SPECIFICATION 145579-G-SP-0.02.
3. INSTRUMENT AND EQUIPMENT LABELS TO BE REVISED AS PART OF VENDOR DESIGN PACKAGE REVIEW.
4. FIC-352 PROVIDES BYPASS FLOW CONTROL TO MAINTAIN A CONSTANT 900 CHILLED WATER FLOW INTO AND OUT OF THE SKID.
5. SHIPPER GOODS TO BE INSTALLED IN THE FIELD.
6. STAINS NOZZLES.
F-145579-36-A-0100
amec
145579-FINAL DBVS DESIGN
U.S. DEPARTMENT OF ENERGY
BULK VITRIFICATION
WET SCRUBBER
SKID NO. 1 P&ID