Issued by
RPP-WTP PDC

Nonradioactive Air Emissions Notice of Construction Permit Application for the WTP Effluent Management Facility

Document title: Nonradioactive Air Emissions Notice of Construction Permit Application for the WTP Effluent Management Facility

Document number: 24590-WTP-RPT-ENV-15-007, Rev 0

Contract deliverable number: 7.7

Contract number: DE-AC27-01RV14136

Department: Environmental Protection

Author(s): Chad Dobie Dave Blumenkranz

Checked by: Robert Haggard

Issue status: Approved

Approved by: Roger Landon

Approver's position: Environmental Protection Manager

Approver's signature: Roger J Landon (Signature) 6/21/16 (Date)

River Protection Project
Waste Treatment Plant
2435 Stevens Center Place
Richland, WA 99354
United States of America
Tel: 509 371 2000

History Sheet

Rev	Reason for revision	Revised by
0	Initial issue.	C. Dobie

Contents

History Sheet ii
Acronyms v
1 Introduction 1
2 Scope 2
3 Facility Location 2
4 Responsible Manager 4
5 Review of Applicable Regulatory Requirements 4
5.1 Other Clean Air Act Regulations 5
6 State Environmental Policy Act 6
7 Project Description 6
7.1 WTP Baseline Process Overview 6
7.2 WTP Direct Feed LAW Process Overview 7
7.3 Effluent Management Facility 9
8 Emission Estimates 12
8.1 Potential Criteria Pollutant Emissions 12
9 Toxic Air Pollutant Emissions and Ambient Air Impact Analysis 12
9.1 Emissions Estimate 12
9.2 Toxic Air Pollutant Emissions Screening and Air Impact Assessment 14
9.3 Air Dispersion Modeling 18
10 Best Available Control Technology for Emissions of Toxic Air Pollutants 21
10.1 Selected T-BACT for the Effluent Management Facility 21
11 References 24
11.1 Project Documents 24
11.2 Codes and Standards 24
11.3 Other 25

Appendices

Appendix A Emissions Estimates Supporting Nonradioactive Air Emissions NOC Permit Application ..... A-i

Tables

Table 8-1 Proposed EMF Annual Potential Criteria Pollutant Emission Estimates 12
Table 9-1 Toxic Air Pollutant Emissions From EMF in Excess of De Minimis Emission Values 16
Table 9-2 WTP Stack Release Parameters 18
Table 10-1 Proposed T-BACT for New EMF Emission Unit 22
Table A-1 Toxic Air Pollutant Emissions from EMF A-1

Figures

Figure 3-1 Location of the WTP on the Hanford Site 3
Figure 3-2 Location of EMF within the WTP 4
Figure 7-1 Process Schematic of the Effluent Management Facility 8
Figure 7-2 Effluent Management Facility Context Diagram 11
Figure 9-1 Illustration of EMF Emissions 14
Figure 9-2 BPIP-Prime Map of WTP Structures 19
Figure 9-3 Map and Listing of DEM Files 20
Figure 10-1 Evaporator Process Vessel Vent (DEP) Controls 23

Acronyms

ASIL	acceptable source impact level
BACT	best available control technology
BARCT	best available radioactive control technology
BOF	Balance of Facilities
DEM	Digital Elevation Model
DEP	Direct Feed LAW Effluent Management Facility Process System
DOE	US Department of Energy
DVP	Direct Feed LAW Effluent Management Facility Vessel Vent Process System
Ecology	Washington State Department of Ecology
EMF	Effluent Management Facility
EPA	US Environmental Protection Agency
HEPA	high-efficiency particulate air (filter)
HLW	High-Level Waste (Facility)
Lab	Analytical Laboratory
LAW	Low-Activity Waste (Facility)
LAWPS	Low-Activity Waste Pretreatment System
NOC	notice of construction
NSR	new source review
PSD	Prevention of Significant Deterioration
PT	Pretreatment (Facility)
RLD	radioactive liquid waste disposal system
SQER	small quantity emissions rate
TAP	toxic air pollutants
T-BACT	best available control technology for toxic air pollutants
WDOH	Washington State Department of Health
WTP	Hanford Tank Waste Treatment and Immobilization Plant

1 Introduction

This nonradioactive air emissions notice of construction (NOC) permit application is provided to obtain the Washington State Department of Ecology's (Ecology) approval of planned changes associated with the Hanford Tank Waste Treatment and Immobilization Plant (WTP) that require construction of a new emission unit.

The application proposes to construct the new Effluent Management Facility (EMF) at WTP in support of directly feeding low-activity waste into the Low-Activity Waste (LAW) Facility—the configuration of which is referred to as Direct Feed LAW. The EMF is necessary to support the Direct Feed LAW configuration at WTP. The Direct Feed LAW configuration allows Hanford Site waste treatment at WTP to commence near-term while design and technical decisions associated with the High-Level Waste (HLW) and Pretreatment (PT) facilities are resolved. The EMF will have one new emission unit with the potential to emit both radioactive and nonradioactive air emissions. All other WTP emissions units remain unchanged and continue under construction as permitted under DE02NWP-002, Rev 2 (CCN 258062).

The application is prepared consistent with the requirements in WAC 173-400, *General Regulations for Air Pollution Sources*, and WAC 173-460, *Controls of New Sources of Toxic Air Pollutants*. This application describes the necessary role of the EMF in the Direct Feed LAW configuration of WTP. As a new source of emissions at WTP, this application is focused on the new EMF emission unit. Existing emission units permitted under DE02NWP-002, Rev 2 (CCN 258062), will be referred to as appropriate, but this application is focused on the EMF emission unit. Complete descriptions of existing WTP emission units are described in the Ecology-approved 24590-WTP-RPT-ENV-01-009, Rev 1, *Nonradioactive Air Emissions Notice of Construction Permit Application for the Hanford Tank Waste Treatment and Immobilization Plant*, and 24590-WTP-RPT-ENV-12-002, Rev 1, *Nonradioactive Air Emissions Notice of Construction Permit Application Supplement to DE02NWP-002.*

Emissions of criteria air pollutants and toxic air pollutants (TAP) for this activity were estimated based on the Direct Feed LAW bounding feed vector provided by the Tank Operations Contractor in *Feed Vector Development in Support of WTP Environmental Risk Assessment Activities* (WRPS 2016). Estimated potential TAPs emissions showed that several TAPs exceed de minimis value in WAC 173-460-150, *Controls of New Sources of Toxic Air Pollutants: Table of ASIL, SQER, and De Minimis Emissions Values*. Because several of these TAPs also exceed small quantity emission rates (SQER), air dispersion modeling using the US Environment Protection Agency's (EPA) approved AERMOD was used to assess ambient air impacts to corresponding acceptable source impact levels (ASIL). Results of the modeling analysis determined that only dimethyl mercury exceeded its corresponding ASIL. To address the WAC 173-460-090, *Controls of New Sources of Toxic Air Pollutants: Second Tier Review*, requirements for dimethyl mercury, review of the Ecology-approved RPP-ENV-59016, Rev 1, *Second Tier Review Petition for Hanford Tank Farms and Waste Treatment Plant Dimethyl Mercury Emissions* (herein referred to as the Second-Tier Review Petition) (WRPS 2015) shows that potential dimethyl mercury emissions from EMF are bounded by the emission rate used in the petition.

To fulfill the WAC 173-460-040(3)(a), *Controls of New Sources of Toxic Air Pollutants: New Source Review*, best available control technology for toxic air pollutants (tBACT) requirement, report 24590-WTP-RPT-ENV-15-005, *Best Available Control Technology Analysis for Toxic Air Pollutants for the WTP Effluent Management Facility*, was prepared to accompany this application to Ecology. The technologies selected for abatement of particulate and aerosols were determined to be high-efficiency

particulate air (HEPA) filters. Technologies considered for the abatement of gaseous and vapor-bound TAPs exceeding de minimis levels and the dimethyl mercury ASIL were eliminated due to technical infeasibilities or because the costs exceeded the amounts Ecology considers to be economically justifiable.

Since the existing WTP Project is also permitted under Prevention of Significant Deterioration (PSD) permit PSD-02-01 (Ecology 2013b)—because the original project's total NO_x and PM_{10} emissions exceeded corresponding significance levels—the new EMF emission source was assessed for applicability under the PSD. The maximum potential emissions of all criteria pollutants resulting from the proposed EMF emission unit are estimated to be below WAC 173-400-110(5), *General Regulations for Air Pollution Sources: New Source Review (NSR) for Sources and Portable Sources*, Table 5 criteria pollutant exemption levels. Specifically, potential emissions of NO_x are estimated at 0.0 tons per year and potential emissions of particulate matter are estimated at 0.0 tons per year. Since emissions of all criteria pollutants are less than emission unit exemption levels, new source review under PSD is not required for the EMF.

2 Scope

This application is focused on the new EMF emission unit. Unmodified WTP emission units that continue under construction will be highlighted where appropriate, but emissions estimates and best available control technology (BACT) and toxics-BACT (T-BACT) conclusions remain as identified in the existing report 24590-WTP-RPT-ENV-01-009, Rev. 2, *Nonradioactive Air Emissions Notice of Construction Permit Application for the Hanford Tank Waste Treatment and Immobilization Plant*, and 24590-WTP-RPT-ENV-12-002, Rev. 1, *Nonradioactive Air Emissions Notice of Construction Permit Application Supplement to DE02NWP-002*, and associated air permit approval DE02NWP-002, Rev 2 (CCN 258062).

To support Ecology's review of the EMF emission unit, this application is prepared consistent with Ecology's form ECY 070-410, *Notice of Construction Application Form* (Ecology 2013a), and includes the following:

- Review of applicable regulatory requirements
- State Environmental Policy Act
- Project description
- Emissions estimations
- Ambient air impact analysis
- BACT/T-BACT

3 Facility Location

The EMF is located on the WTP site on the eastern part of the 200-East Area on the US Department of Energy (DOE) Hanford Site (refer to Figure 3-1 and Figure 3-2). The WTP site is northwest of Richland, Washington; on the 7.5-minute quadrangle topographic map of Gable Butte, it is in Section 3, T12N, R26E, Willamette Meridian. The latitude and longitude coordinates corresponding to the general WTP site are approximately N 46°33'4", W 119°30'9".

The address for the WTP site is as follows:

US Department of Energy, Office of River Protection
Hanford Site
200-East Area, Waste Treatment Plant
Richland, WA 99352

Figure 3-1 Location of the WTP on the Hanford Site

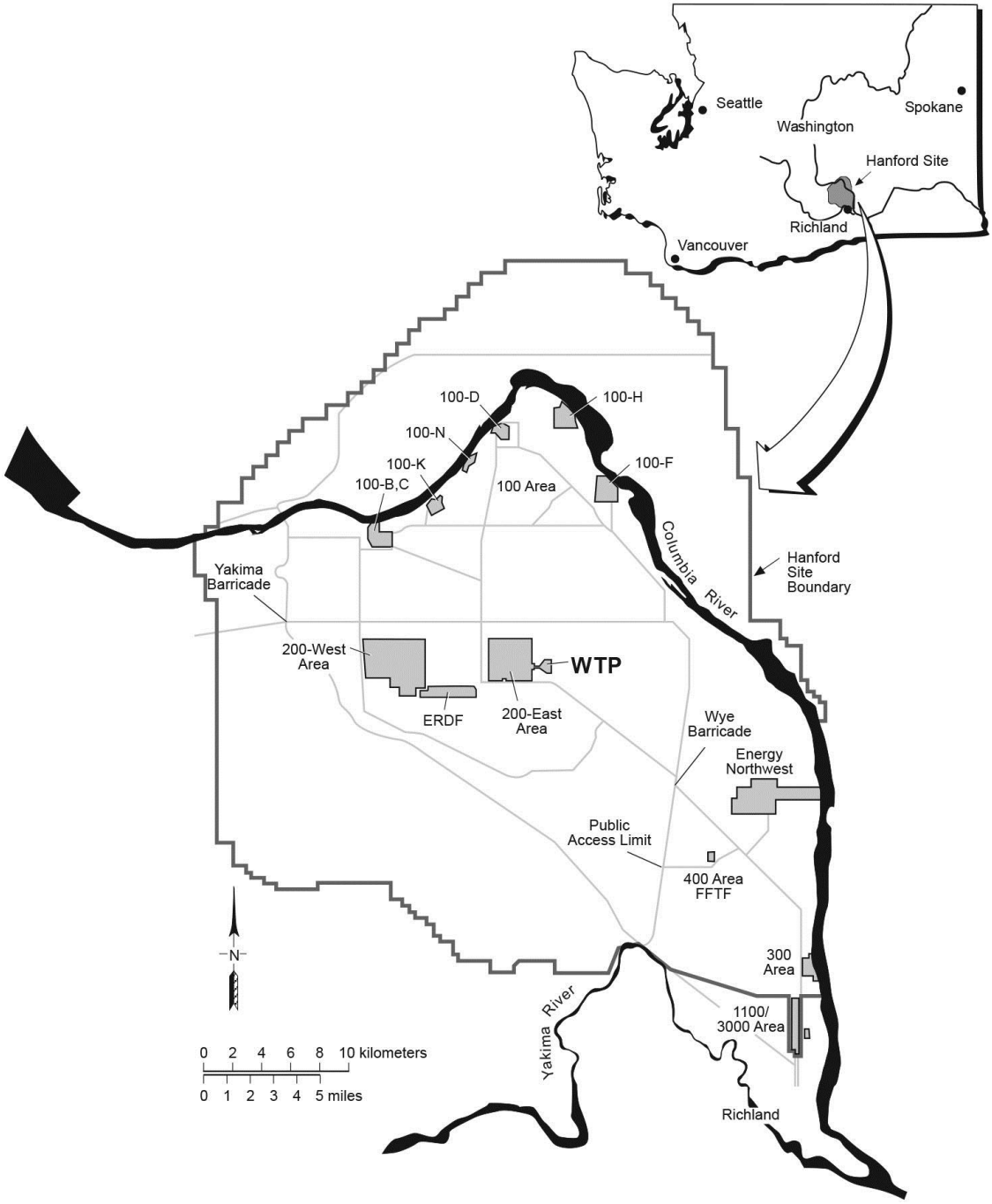

Figure 3-2 Location of EMF within the WTP

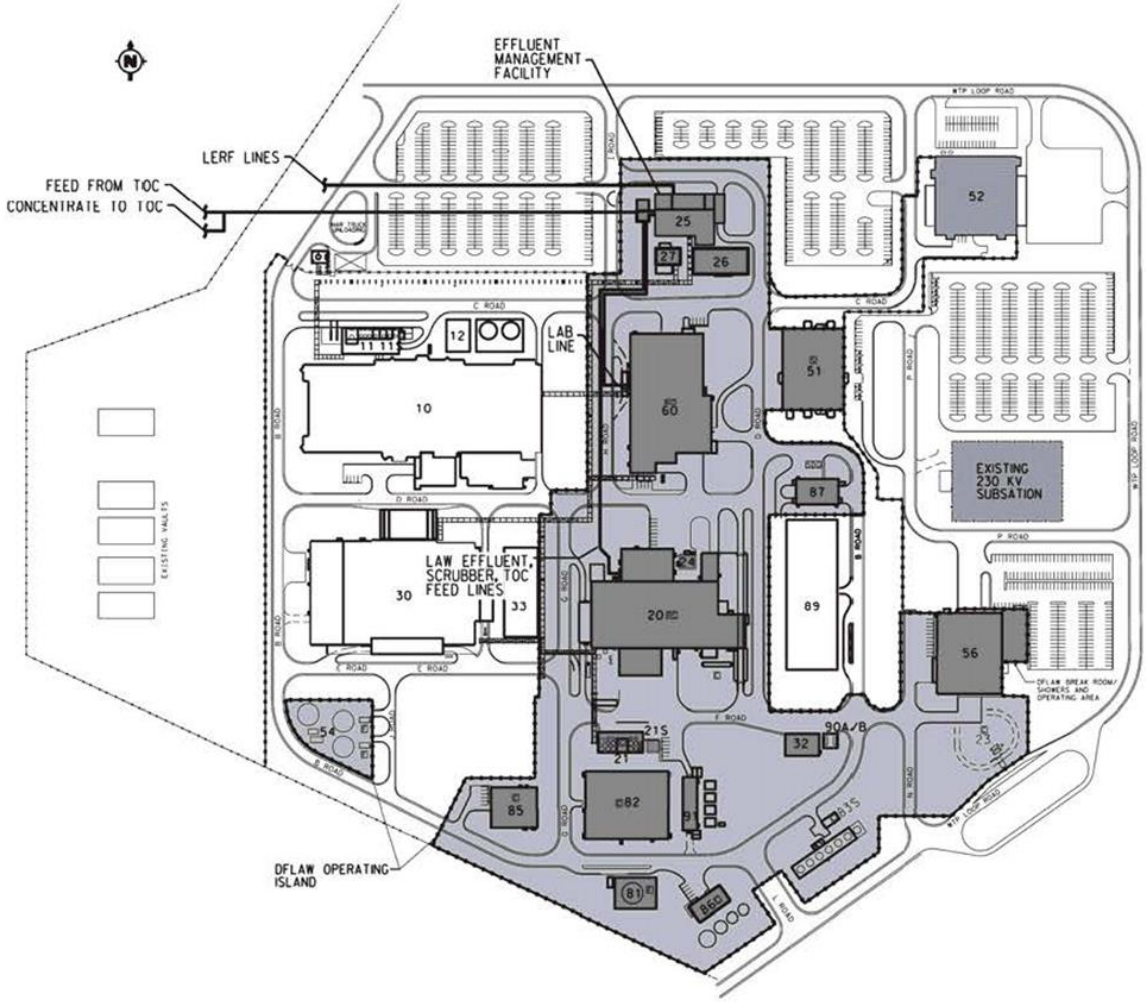

4 Responsible Manager

Mr. KW Smith, Manager
US Department of Energy, Office of River Protection
P.O. Box 450, MSIN H6-60
Richland, WA 99352
(509) 372-2315

5 Review of Applicable Regulatory Requirements

In Washington State, Ecology is responsible for establishing and maintaining the air quality standards to protect the public health (RCW 70.94.011). Facilities with new sources of criteria and TAP emissions are required to comply with the new source review requirements in WAC 173-400, “General Regulations for Air Pollution Sources,” and WAC 173-460, “Controls of New Sources of Toxic Air Pollutants.”

Estimated potential TAP emissions showed that several TAPs exceed WAC 173-460-150 de minimis levels. As a result, the new EMF emission unit requires submittal of this NOC permit application, per WAC 173-460-040.

The EMF includes two reagent storage vessels located on the north side of the EMF LAW effluent process building (building 25). The vessels are located outdoors and contain sodium nitrite and sodium hydroxide. Each vessel ventilates to the atmosphere via a conservation pressure relief closure device. Since sodium hydroxide is considered a TAP, the vessel was considered for new source review applicability. Review of WAC 173-400-110(4) concludes that these tanks fall under the WAC 173-400-110(4)(b)(viii) emission unit exemption since they are equipped with a closure device and store aqueous solutions of inorganic salts and bases.

5.1 Other Clean Air Act Regulations

5.1.1 Prevention of Significant Deterioration Review

The existing WTP Project is permitted under PSD-02-01 (Ecology 2013b) because estimated emissions of NO_x and PM_{10} exceeded corresponding significance levels. To assess the proposed EMF emission unit for actions under PSD, a review of potential criteria pollutant emissions was performed. Results of the review conclude that potential emissions of all criteria pollutants from the EMF are less than WAC 173-400-110(5) new source review (NSR) exemption levels (Table 8-1). Specifically, potential emissions of NO_x and particulate matter are each estimated at 0.0 tons per year. Since potential emissions of PSD pollutants are less than NSR exemption levels, permitting actions under PSD is not required. This conclusion was confirmed by Ecology Headquarters PSD Lead, Marc Crooks, on March 7, 2016 (refer to CCN 285554, *Ecology Confirmation the EMF Not Subject to PSD Permitting*).

5.1.2 Review for WAC 246-247, Radiation Protection—Air Emissions

The Washington State Department of Health (WDOH) oversees permitting of radioactive air emissions sources under regulations in WAC 246-247, *Radiation Protection—Air Emissions*. Because the new EMF emission unit has the potential to emit radioactive air emissions, a separate permit application 24590-WTP-RPT-ENV-15-008, *Radioactive Air Emissions Notice of Construction Permit Application for the WTP Effluent Management Facility*, will be submitted to the WDOH in parallel with this application to obtain the WDOH's approval to construct the new EMF and associated radioactive air emission unit. The radioactive NOC is prepared consistent with the application requirements listed in WAC 246-247-110, *Radiation Protection—Air Emissions: Appendix A—Application Information Requirements*.

5.1.3 Review for WAC 173-401, Operating Permit Regulation

The WAC 173-401, *Operating Permit Regulation*, specifies the permitting requirements for major sources, including the Hanford Site. The current DE02NWP-002 (CCN 258062) is included in Hanford Site Air Operating Permit 00-05-006 (Ecology 2013c). In parallel with the submittal of this application, an administrative amendment request will be included in the submission to Ecology, requesting the incorporation of the revised DE02NWP-002 into Air Operating Permit 00-05-006.

5.1.4 New Source Performance Standards

The Clean Air Act of 1970 requires certain categories of emissions sources to meet the New Source Performance Standards established under 40 CFR 60, *Standards of Performance for New Stationary*

Sources. Review of 40 CFR 60 confirms that there are no New Source Performance Standards applicable to the EMF emission unit.

5.1.5 National Emissions Standards for Hazardous Air Pollutants

The Clean Air Act of 1970 requires certain categories of emissions sources to meet standards established under 40 CFR 63, *National Emission Standards for Hazardous Air Pollutants for Source Categories*. Review of 40 CFR 63 confirms that there are no National Emissions Standards for Hazardous Air Pollutants applicable to the EMF emission unit.

6 State Environmental Policy Act

This Project fulfills the requirements of WAC 197-11, *SEPA Rules*, and RCW 43.21C.030(2)(c), *Guidelines for State Agencies: Local Governments—Statements—Reports—Advice—Information*, per RCW 43.21C.150, *State Environmental Policy: RCW 43.21C.030(2)(c) Inapplicable When Statement Previously Prepared Pursuant to National Environmental Policy Act*, which states the following:

> The requirements of RCW 43.21C.030(2)(c) pertaining to the preparation of a detailed statement by branches of government shall not apply when an adequate detailed statement has been previously prepared pursuant to the national environmental policy act of 1969, in which event said prepared statement may be utilized in lieu of a separately prepared statement under RCW 43.21C.030(2)(c).

Document DOE/EIS-0391, *Final Tank Closure and Waste Management Environmental Impact Statement for the Hanford Site, Richland, Washington (TC & WM EIS)* (DOE 2012), meets the agencies' review needs for the current proposal. The lead reviewing agency is the DOE Office of River Protection. The point of contact is Mary Beth Burandt, Document Manager.

7 Project Description

7.1 WTP Baseline Process Overview

The WTP is being constructed to store and treat mixed radioactive and dangerous Hanford tank waste from the Hanford Site tank system. In the baseline configuration, the WTP consists of three main process facilities: the PT, LAW, and HLW facilities—supported by an Analytical Laboratory (Lab). In the baseline configuration, tank waste will be received into the PT Facility, where it will be separated into low-activity waste and high-level waste feed, then immobilized in a glass matrix and poured into steel containers. Support systems and utilities required for the WTP will be provided by the Balance of Facilities (BOF). The BOF includes steam plant boilers, Type I diesel generator, turbine generators, diesel engine driven fire water pumps, and glass former storage facility. Construction of these facilities commenced in CY 2002 and has been ongoing.

Detailed process descriptions of each existing WTP emissions unit are provided in the previously submitted *Nonradioactive Air Emissions Notice of Construction Permit Application for the Hanford Tank Waste Treatment and Immobilization Plant*, 24590-WTP-RPT-ENV-01-009, Rev 1 and *Nonradioactive Air Emissions Notice of Construction Permit Application Supplement to DE02NWP-002*, 24590-WTP-RPT-ENV-12-002, Rev 1.

7.2 WTP Direct Feed LAW Process Overview

To facilitate the processing of tank waste into glass at the earliest possible date, an interim Direct Feed LAW configuration is being implemented. The Direct Feed LAW configuration does not require changes to existing WTP emission units, but it will require the construction of the EMF to manage LAW Facility effluents that were to be sent to the PT Facility in the baseline configuration. It is planned that the WTP will operate in the Direct Feed LAW configuration until the PT and HLW facilities are operational. After which time, operation of those facilities will be pursued.

Since the WTP PT Facility will not be available, Hanford Site tank waste will be received into the new Low-Activity Waste Pretreatment System (LAWPS), which will function to produce the WTP LAW Facility feed. Pretreatment of tank waste to remove cesium and solids will be performed by LAWPS, which assumes the tank waste pretreatment function while technical decisions associated with the WTP PT Facility are being resolved. Note that the LAWPS and its associated emission source(s) will be designed and permitted by a separate Hanford Site contractor; therefore, it is outside the scope of this application. In the Direct Feed LAW configuration, the WTP LAW Facility, Lab, and BOF (including EMF) will operate while the WTP PT and HLW facilities continue under construction to support the future baseline WTP configuration.

The EMF's purpose is to support processing of secondary liquid waste streams generated during low-activity waste melter offgas control system operation. The EMF will also process small amounts of effluent from the Lab radioactive liquid waste disposal system (RLD) vessels, as well as the waste transfer line flushing effluent. In the baseline WTP configuration, these waste streams are processed in the WTP PT Facility.

In the Direct Feed LAW configuration, the EMF will collect and treat the liquid effluents in an evaporator. The evaporator overheads (process condensate) will be piped to the 200-Area Liquid Effluent Retention Facility / Effluent Treatment Facility for further processing. The residual EMF evaporator bottoms (process concentrate) is returned to the LAW Facility for vitrification. The concentrate may also be returned to Tank Farms, the LAWPS, or disposed at an alternate location via tanker truck. Figure 7-1 provides the process schematic of the EMF.

Support systems and utilities required for Direct Feed LAW to operate will continue to be provided by the existing BOF.

Figure 7-1 Process Schematic of the Effluent Management Facility

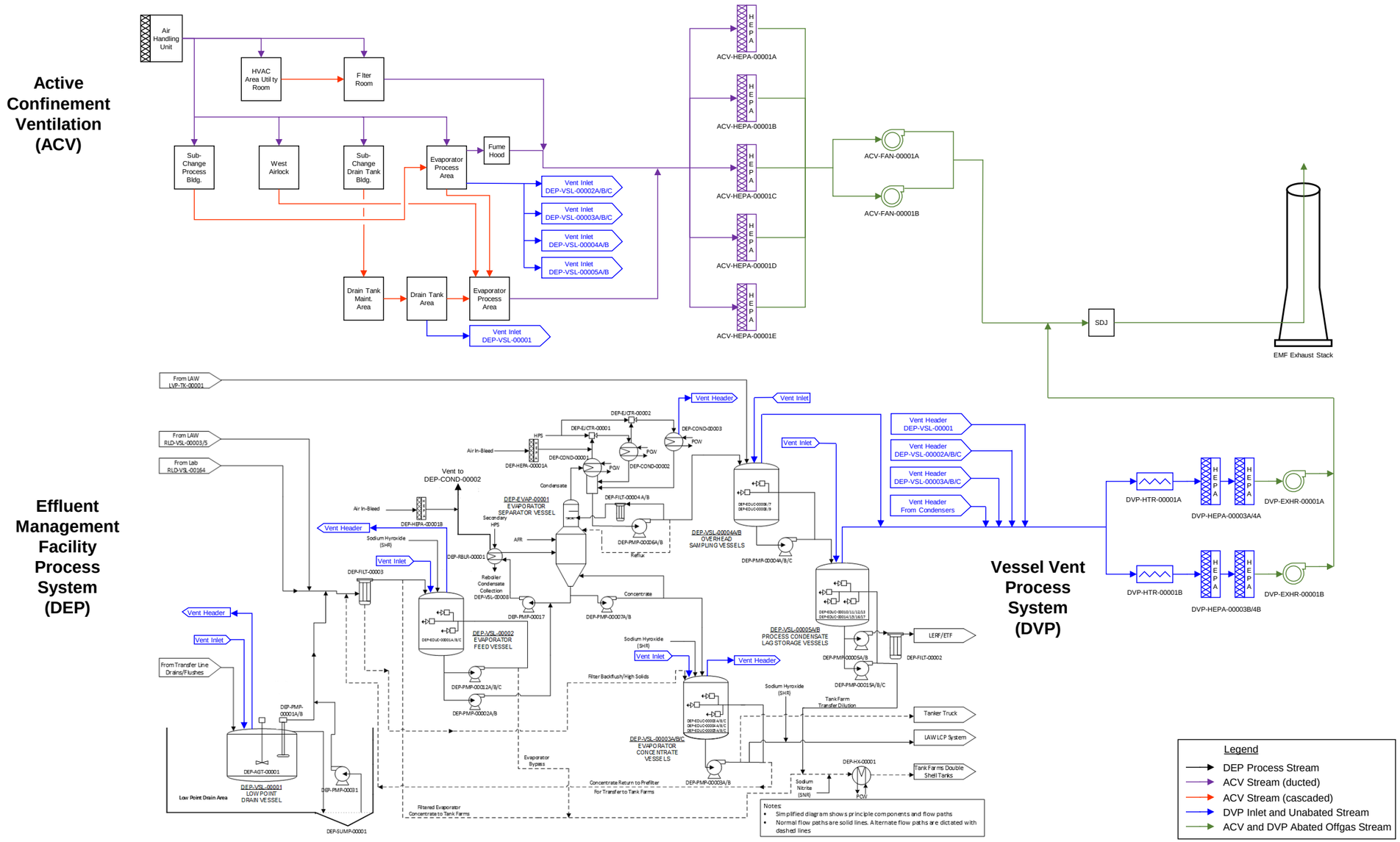

7.3 Effluent Management Facility

The EMF will be comprised of four buildings. The LAW effluent process building (building 25) will house the Direct Feed LAW Effluent Management Facility Process System (DEP) evaporator, related process equipment, the Direct Feed LAW Effluent Management Facility Vessel Vent Process System (DVP) system HEPA preheater, and HEPA filters and fans, as well as collect and process the liquid effluent. The LAW effluent drain tank building (also part of building 25) will house the low-point drain vessel. The LAW effluent utility building (building 26) will house the active confinement ventilation system (ACV) HEPA filters and fans, various utility pumps and holding vessels, and associated electrical equipment. The LAW effluent electrical building (building 27) will house most of the EMF electrical equipment and control network.

7.3.1 EMF Evaporator and Process Vessel Vent System

Liquid effluents from the LAW Facility and Lab vessels will be transferred through the EMF evaporator feed vessel to the DEP system evaporator located in the LAW effluent process building (building 25). Liquid effluents from transfer line flush water from the EMF low-point drain vessel will also be transferred through the evaporator feed vessel. These liquid effluent streams pass through a prefilter prior to entering the feed vessel. The evaporator feed vessel will be purged with air drawn through the vessel head space and will be vented to the vessel vent header. This vessel will have the capability to receive sodium hydroxide for pH adjustment, and demineralized water for flushing. Effluent will be continuously pumped from the feed vessel to the evaporator to maintain a constant liquid level in the evaporator.

The DEP system evaporator separator will receive feed from the evaporator feed vessel that has passed through the evaporator reboiler. The evaporator will be operated under vacuum to lower the boiling point of the concentrate. The overhead vapors, mainly water, will pass through an impingement plate and demister pads to remove entrained liquid, with the overhead vapor continuing on to the primary condenser. The majority of the bottom liquid will be recycled through the reboiler, with a small amount sent to the evaporator concentrate vessels.

Overhead vapor from the evaporator and steam from the steam-jet air ejectors will be condensed and collected in the overhead sampling vessels. Spent caustic scrubber solution from the LAW Facility offgas caustic scrubber will also be collected in the overhead sampling vessels. The EMF overhead sampling vessel effluent is transferred to the 200 Area Liquid Effluent Retention Facility / Effluent Treatment Facility.

Concentrate (bottoms) will be pumped from the evaporator to the evaporator concentrate vessels and recirculated through the evaporator reboiler to maintain a constant solution density in the evaporator and to prevent buildup of settled solids in the waste. The concentrate may be recycled back to the LAW concentrate receipt process system for vitrification, returned to the Tank Farms double-shell tanks system, or returned to the LAWPS. An additional option of offloading to a tanker truck may be available.

The DEP system process vessels and evaporator offgas are ventilated to the DVP system HEPA filters, as discussed in Section 10.

7.3.2 Effluent Management Facility Ventilation System

The EMF ventilation system is referred to as the Active Confinement Ventilation (ACV) system. This system operates on a once-through ventilation strategy whereby air is cascaded from areas of lower radiological contamination potential to areas of higher contamination potential before being exhausted

from the facility emission unit. The ACV system has supply and exhaust components. The supply component of the ACV system follows the design of contamination area C2 ventilation supply systems used in other WTP facilities, and the exhaust component of the ACV system generally follows the design of contamination area C3 ventilation exhaust systems used in other WTP facilities. All outside air is conditioned in the ACV system air handling units before being delivered to the EMF building areas, except for the electrical building (building 27), which has its own HVAC system. The air is then treated through HEPA filtration for radiological control and exhausted through exhaust fans, then combined with the HEPA filtered air from the DVP vessel vent process system stream, and finally discharged to the atmosphere via the EMF stack (Figure 7-1). Figure 7-2 represents an overall view of the Direct Feed LAW functions relative to new and existing facilities, interfaces with existing systems, and new or modified systems.

Insignificant amounts of TAPs are expected to be present in the EMF ACV systems.

Figure 7-2 Effluent Management Facility Context Diagram

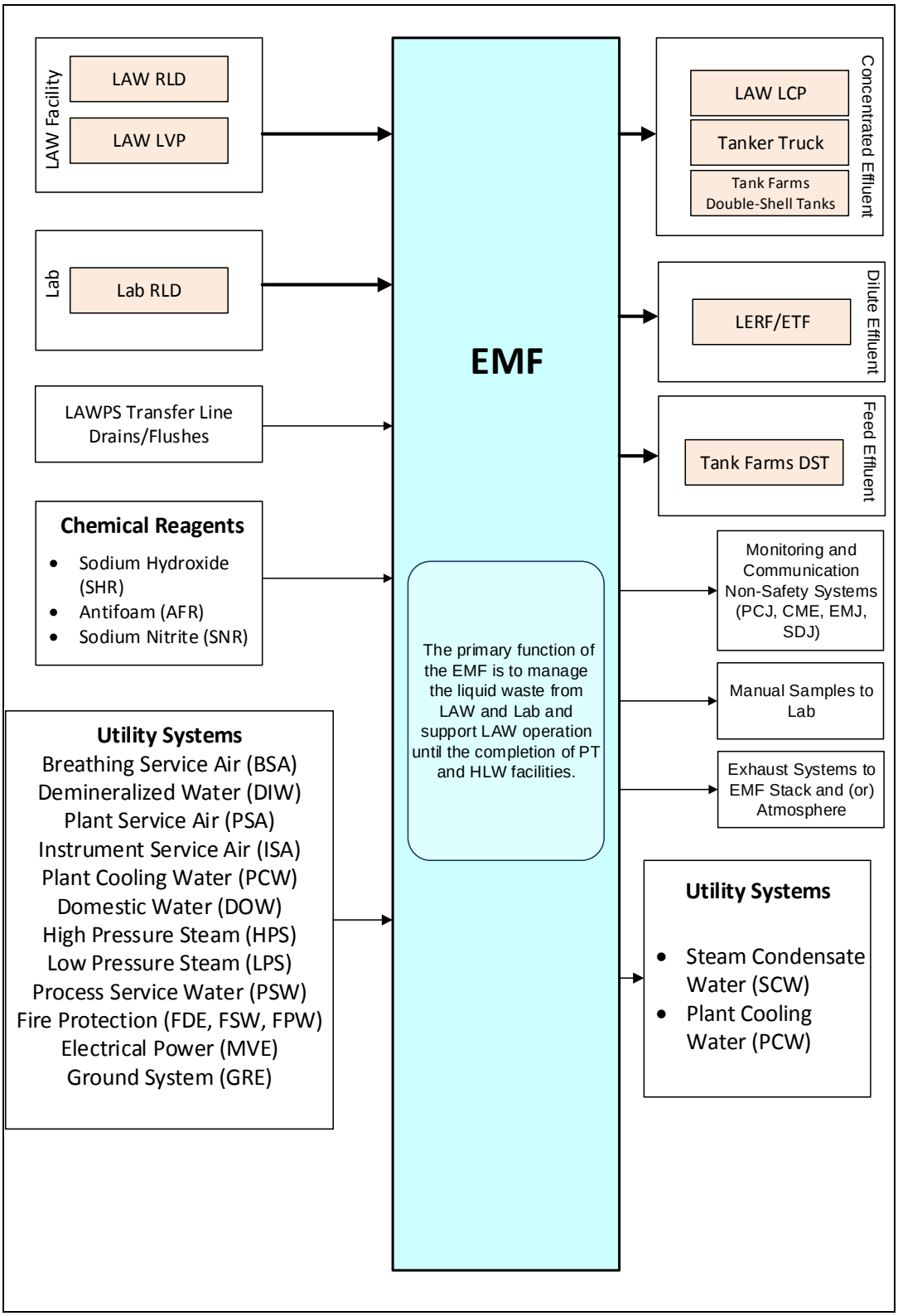

Note: LAW RLD = submerged bed scrubber / wet electrostatic precipitator effluent
LAW LVP = caustic scrubber effluent

8 Emission Estimates

The unabated (potential) and abated emission rates for criteria pollutants and TAP emissions from the EMF evaporator process vessels and DEP system evaporator are based on 24590-BOF-M4C-DEP-00001, *DFLAW Effluent Management Facility Air Emissions Estimate*. Complete descriptions of the emissions estimate methodology and bounding assumptions are included in the above calculation. The following descriptions are intended to summarize the emissions estimates.

8.1 Potential Criteria Pollutant Emissions

As described in 24590-BOF-M4C-DEP-00001, Section 6.1.31, the EMF will not generate criteria pollutant gases because the DEP system does not contain the necessary thermal or kinetic conditions to produce measurable amounts of inorganic constituents of potential concern. As a result, there is no potential source for CO/CO_2, NO/NO_2, and SO_2 generation in the EMF. Carbonate, nitrite/nitrate, and sulfuric salts may be present, but they are nonvolatile and will remain as entrained liquids/solids in the EMF liquid effluents. Particulates, volatile organics, and lead are estimated to be emitted at insignificant rates below WAC 173-400-110(5) criteria pollutant emission unit exemption levels. Table 8-1 provides a summary of the EMF potential criteria pollutant emissions.

Table 8-1 EMF Annual Potential Criteria Pollutant Emission Estimates

Criteria Pollutant	Potential Emissions (Tons per Year)	WAC 173-400-110(5) Exemption Level (Tons per Year)
CO	0.00	5.0
NO_x	0.00	2.0
SO_2	0.00	2.0
PM_{10}	0.00	0.75
$PM_{2.5}$	0.00	0.5
Total PM	0.03	1.25
VOC	0.08	2.0
Pb	0.000	0.005

9 Toxic Air Pollutant Emissions and Ambient Air Impact Analysis

9.1 Emissions Estimate

As previously described, the EMF emissions are based on 24590-BOF-M4C-DEP-00001, *DFLAW Effluent Management Facility Air Emissions Estimate*. The TAP emissions were calculated using several conservative assumptions to bound potential emissions. For particulate TAP emissions, the emissions estimate assumes the waste feed to EMF has the same composition as the waste feed to the LAW Facility. Vapor emissions are estimated using waste feed compositions diluted by transfer line flush water. The feed vector used for the waste composition was the Direct Feed LAW bounding feed vector provided in

Feed Vector Development in Support of WTP Environmental Risk Assessment Activities (WRPS 2016). The EMF emissions estimate combines the following offgas streams:

- ACV system
- Direct Feed LAW Effluent Management Facility Vessel Vent Process System (DVP) which consists of:
  - DEP system evaporator/condenser exhaust
  - DEP system vessel ventilation

As described in Section 7.3.2, the ACV system is considered an insignificant source of TAP emissions and any potential emissions are bound by the conservative assumptions integrated into the DVP emission source.

The DVP system is composed of two main parts, the DEP system evaporator/condenser exhaust and the DEP system vessel ventilation, which contribute the bulk of potential emissions. Particulate-bound constituents are assumed to enter the ventilation stream through entrainment (Section 6.2.3 of 24590-BOF-M4C-DEP-00001), while vapor phase constituents are assumed to diffuse into the ventilation stream in their entirety (Section 6.2.16 of 24590-BOF-M4C-DEP-00001). The DVP emissions also include the contribution of products of incomplete combustion from the LAW Facility offgas effluents, along with ammonia used in the LAW Facility selective catalytic reducer, which is assumed to be captured by the LAW offgas caustic scrubber effluent (Section 5.3.1.3.2 of 24590-BOF-M4C-DEP-00001). The emissions estimate also assumes the presence of dimethyl mercury (Section 5.3.1.3.3 of 24590-BOF-M4C-DEP-00001). Although dimethyl mercury is not quantified in the feed vector, it is assumed to be present in the EMF as a reaction product in the DEP vessels that completely diffuses into the ventilation stream.

Constituents for which there were no feed or products of incomplete combustion data were assumed to be emitted at the average emissions rates of quantified feed constituents and products of incomplete combustion, respectively (Section 5.2.4.2.2 of 24590-BOF-M4C-DEP-00001). Figure 9-1 illustrates the various exhaust streams quantified in the emissions estimate.

Figure 9-1 Illustration of EMF Emission Sources

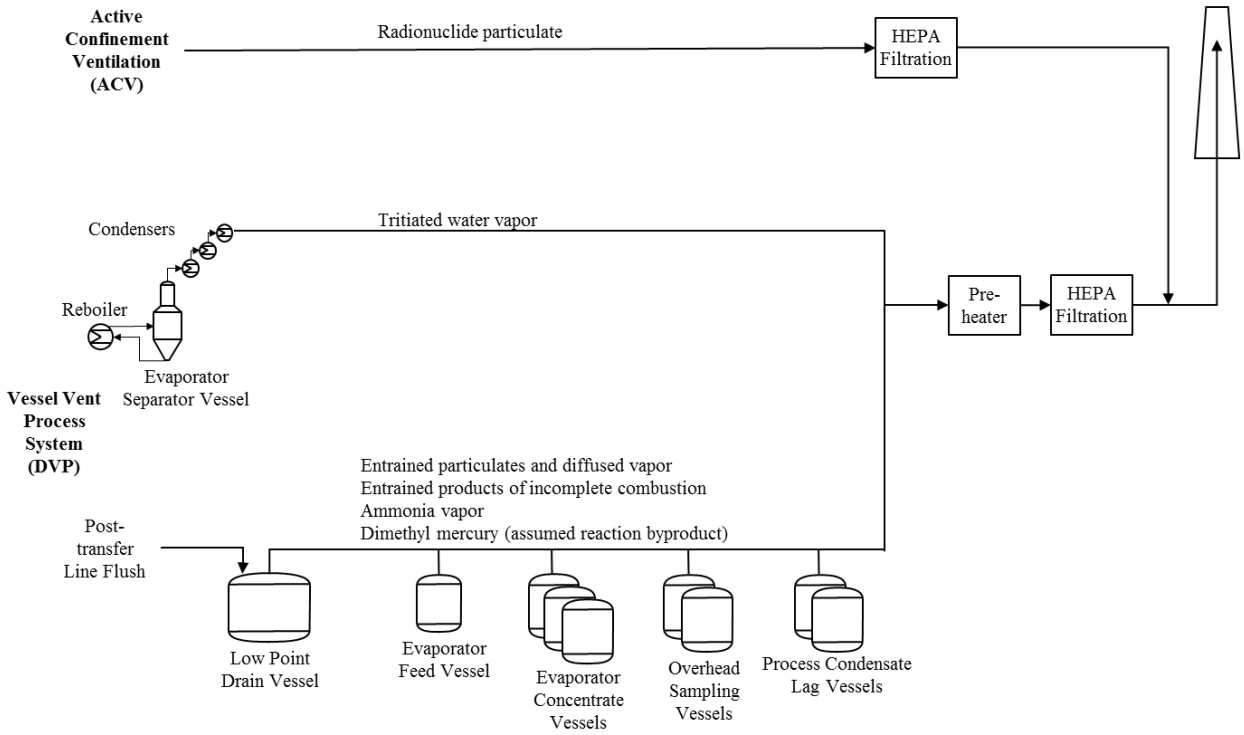

9.2 Toxic Air Pollutant Emissions Screening and Air Impact Assessment

Estimated emissions of more than 400 organic and inorganic compounds from the EMF emission source are documented in 24590-BOF-M4C-DEP-00001, Tables 8-4 through 8-6. Screening analysis determined that 173 of these compounds are identified in WAC 173-460-150 as TAPs (Appendix A). From that screening, 165 of the 173 have estimated potential emissions above 0.0 grams per second. These 165 TAPs were further screened to determine if their potential emissions exceeded their corresponding de minimis levels (Table A-1). Results of that screening (Table 9-1) showed that potential emission rates of 24 TAPs exceeded their corresponding de minimis threshold.

Since screening also confirmed that potential emissions of several TAPs exceeded their corresponding SQER, air dispersion modeling using the EPA's approved AERMOD model was performed to assess ambient air impacts to corresponding ASILs. The AERMOD results confirmed that only dimethyl mercury exceeded its corresponding ASIL. All other TAP emissions are less than their corresponding ASILs (Table 9-1).

9.2.1 Tier II Health Impact Assessment for Dimethyl Mercury

It is proposed that RPP-ENV-59016, *Second Tier Review Petition for Hanford Tank Farm and Waste Treatment Plant Dimethyl Mercury Emissions* (Petition) (WRPS 2015), which was previously reviewed and approved by Ecology on January 21, 2016 (CCN 290160), be used to satisfy WAC 173-460-090, "Second Tier Review," requirements for dimethyl mercury for this notice of construction application. RPP-ENV-59016 is a bounding dimethyl mercury health impact assessment that effectively covers the emissions from the activities proposed in this application. The locations of the emission points for modeling were chosen to be representative of the locations of the individual emission points of dimethyl

mercury associated with the retrieval, transfer, and treatment of tank waste at the Hanford Tank Farms and the WTP.

The Petition utilized a conservative assumption to bound dimethyl mercury emissions from the WTP and the EMF. The Petition assumed that existing WTP emission unit elemental mercury emissions were assumed to be dimethyl mercury. For the new EMF, the Petition assumed that dimethyl mercury emissions were emitted at the same rate as the PT Facility, plus an additional factor of 100 was applied. The resulting bounding dimethyl mercury emission rate for the EMF in the Petition equated to 5.0E−05 gram per second.

In comparison to the Petition, the EMF emission units estimated potential dimethyl mercury emission rate identified in 24590-BOF-M4C-DEP-00001 *DFLAW Effluent Management Facility Air Emissions Estimate*, is 5.29E−07 gram per second (Table 8-6 in 24590-BOF-M4C-DEP-00001). Comparing this rate to the 5.0E-05 gram per second rate in the Hanford Site Petition shows that the EMF's estimated dimethyl mercury emissions in this NOC Application are bounded by the Petition.

Table 9-1 Toxic Air Pollutant Emissions From EMF in Excess of De Minimis Emission Values

Pollutant	CAS	ASIL Averaging Period	Unabated Emission Rate (lb/averaging period)	De Minimis Level (lb/averaging period)	Abated Emission Rate (lb/averaging period)	SQER (lb/averaging period)	EMF Ambient Air Impact from AEMROD ($\mu g/m^3$)	ASIL ($\mu g/m^3$)	Percent of ASIL[1]
Organics									
N-Nitrosomethylethylamine	10595-95-6	Annual	1.17E+00	1.53E-03	1.17E+00	3.05E-02	4.60E-07	1.59E-04	0.29%
Bis(2-ethylhexyl)phthalate	117-81-7	Annual	1.17E+00	4.00E-01	1.17E+00	8.00E+00	4.60E-07	4.17E-02	0.00%
Aroclors (Total PCB)	1336-36-3	Annual	1.80E+00	1.68E-02	1.80E+00	3.36E-01	7.07E-07	1.75E-03	0.04%
Dibenzo[a,i]pyrene	189-55-9	Annual	1.17E+00	8.72E-04	1.17E+00	1.74E-02	4.60E-07	9.09E-05	0.51%
Dibenzo[a,h]pyrene	189-64-0	Annual	1.17E+00	8.72E-04	1.17E+00	1.74E-02	4.60E-07	9.09E-05	0.51%
Dibenzo(a,l)pyrene	191-30-0	Annual	1.17E+00	8.72E-04	1.17E+00	1.74E-02	4.60E-07	9.09E-05	0.51%
Dibenzo[a,e]pyrene	192-65-4	Annual	1.17E+00	8.72E-03	1.17E+00	1.74E-01	4.60E-07	9.09E-04	0.05%
Indeno(1,2,3-cd)pyrene	193-39-5	Annual	1.17E+00	8.72E-02	1.17E+00	1.74E+00	4.60E-07	9.09E-03	0.01%
Dibenz[a,j]acridine	224-42-0	Annual	1.17E+00	8.72E-02	1.17E+00	1.74E+00	4.60E-07	9.09E-03	0.01%
Dibenz[a,h]acridine	226-36-8	Annual	1.17E+00	8.72E-02	1.17E+00	1.74E+00	4.60E-07	9.09E-03	0.01%
5-Methylchrysene	3697-24-3	Annual	1.17E+00	8.72E-03	1.17E+00	1.74E-01	4.60E-07	9.09E-04	0.05%
3-Methylcholanthrene	56-49-5	Annual	1.17E+00	1.53E-03	1.17E+00	3.05E-02	4.60E-07	1.59E-04	0.29%
2,3,4,7,8-Pentachlorodibenzofuran	57117-31-4	Annual	1.70E-06	5.05E-07	8.49E-12	1.01E-05	3.33E-18	5.26E-08	0.00%
5-Nitroacenaphthene	602-87-9	Annual	1.17E+00	2.59E-01	1.17E+00	5.18E+00	4.60E-07	2.70E-02	0.00%
Acetamide	60-35-5	Annual	1.17E+00	4.80E-01	1.17E+00	9.59E+00	4.60E-07	5.00E-02	0.00%
N-Nitroso-di-n-propylamine	621-64-7	Annual	3.40E-02	4.80E-03	3.40E-02	9.59E-02	1.33E-08	5.00E-04	0.00%
1,2,3,4,7,8-Hexachlorodibenzofuran	70648-26-9	Annual	2.84E-06	2.52E-06	1.42E-11	5.05E-05	5.57E-18	2.63E-07	0.00%

Table 9-1 Toxic Air Pollutant Emissions From EMF in Excess of De Minimis Emission Values

Pollutant	CAS	ASIL Averaging Period	Unabated Emission Rate (lb/averaging period)	De Minimis Level (lb/averaging period)	Abated Emission Rate (lb/averaging period)	SQER (lb/averaging period)	EMF Ambient Air Impact from AEMROD ($\mu g/m^3$)	ASIL ($\mu g/m^3$)	Percent of ASIL[1]
4,4-DDE	72-55-9	Annual	1.17E+00	9.88E-02	1.17E+00	1.98E+00	4.60E-07	1.03E-02	0.00%
Bromodichloromethane	75-27-4	Annual	1.17E+00	2.59E-01	1.17E+00	5.18E+00	4.60E-07	2.70E-02	0.00%
Naphthalene	91-20-3	Annual	3.68E+00	2.82E-01	3.68E+00	5.64E+00	1.44E-06	2.94E-02	0.00%
Inorganics									
Chromium VI	18540-29-9	Annual	1.00E+00	6.40E-05	5.00E-06	1.28E-03	1.96E-12	6.67E-06	0.00%
Dimethyl Mercury[2]	593-74-8	24-hr	1.01E-04	1.00E-99	1.01E-04	1.00E-99	4.37E-07	1.00E-99	>100%
Cadmium	7440-43-9	Annual	2.82E-02	2.28E-03	1.41E-07	4.57E-02	5.53E-14	2.38E-04	0.00%
Ammonia	7664-41-7	24-hr	1.92E+01	4.65E-01	1.92E+01	9.31E+00	8.32E-02	7.08E+01	0.12%

[1] Value rounded. Actual percent of ASIL, when shown at 0.00%, is less than 0.005%.

[2] Per Section 9.2.1, it is proposed that the Second-Tier Review Petition, which was previously reviewed and approved by Ecology on January 21, 2016, be used to satisfy WAC 173-460-090 requirements for dimethyl mercury for this application. The Second-Tier Review Petition is a bounding dimethyl mercury health impact assessment that covers the emissions from the activities proposed in this application.

9.3 Air Dispersion Modeling

Annual, 24-hour, and 1-hour ground-level TAP concentrations, expressed as micrograms per cubic meter, were determined using EPA's approved air dispersion model AERMOD version 15181 and preprocessors AERMET version 15181, AERMAP version 11103, and BPIP-Prime version 04274 (EPA 2015). The modeling analysis used BEE-Line Software's BEEST version 11.03 to assess the EMF emission unit's impacts to ASILs (Providence/Oris 2015). The BEEST program is a Windows-based user interface to the EPA-approved AERMOD.

AERMOD utilizes individual emission point release characteristics, source emission rates, surface and upper air meteorological data, terrain data, and receptor data to determine maximum annual, 24-hour, and 1-hour concentrations affecting offsite receptors. Details of the modeling analysis are provided below and included in 24590-RMCD-04990, *Air Model Run for Nonrad NOC Permit 24590-WTP-RPT-ENV-15-007*.

<u>Release Characteristics</u>

Stack characteristics were modeled as a point source with release parameters corresponding to design specifications. A summary of the release parameters for the modeled source is provided in Table 9-2.

Table 9-2 WTP Stack Release Parameters

Stack Parameter	EMF		
Stack height	150 ft		
Stack temperature	95 °F		
Exit diameter	3.1 ft		
Exit velocity	52.1 ft/sec		
Exit flowrate	24,000 acfm		
EMF building dimensions (L×W×H)	**Building 25**	**Building 26**	**Building 27**
	Tier 1: 48×34×37 ft Tier 2: 20×18×23 ft	35×23×14 ft	18×12×20 ft

The basis for the stack parameters included the following:

- 24590-BOF-M8C-C3V-00002, *EMF Stack Height Evaluation Calculation*
- 24590-WTP-BODCN-ENG-15-0016, *Updates to Incorporate DFLAW Content*
- 24590-BOF-M4C-DEP-00001, *DFLAW Effluent Management Facility Air Emissions Estimate*
- 24590-BOF-P1-25-00001, *Balance of Facilities LAW Effluent Process Bldg & LAW Effluent Drain Tank Bldg General Arrangement Plan at Elev 0 Ft - 0 In*
- 24590-BOF-P1-26-00002, *Balance of Facilities LAW Effluent Utility Bldg & LAW Effluent Electrical Bldg General Arrangement Sections A and B*

Building Downwash

The building profile input program (BPIP-Prime) was used to determine dominant structures for building downwash calculations made in AERMOD for point sources. Direction-specific building heights and widths of the dominant downwash structures were included in the AERMOD input file directly from the BPIP-Prime results.

Figure 9-2 BPIP-Prime Map of WTP Structures

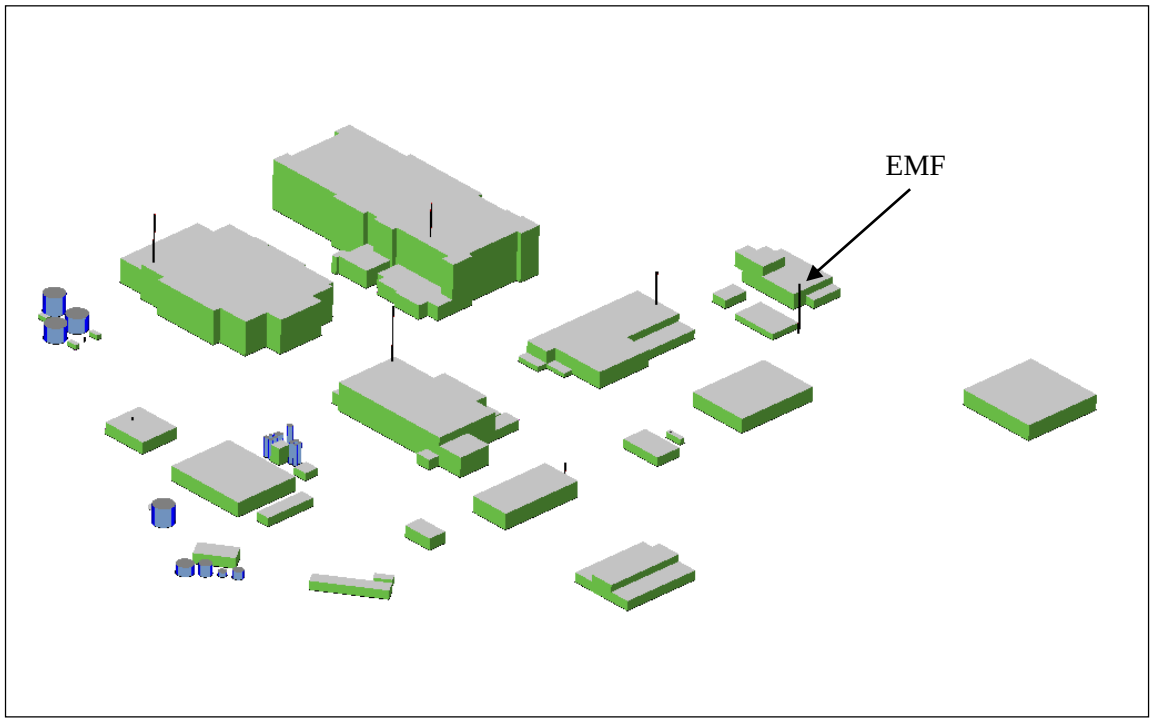

AERMET Meteorological Data

The AERMET preprocessing program was run with a sequential hourly meteorological data set. Five consecutive years of meteorological data (CY 2001 through CY 2005) were modelled to select the year that produced the highest ambient air impacts. Results conclude that CY 2004 meteorological data produced the highest ambient air impacts and was therefore selected to assess EMF TAPs emissions against acceptable source impact levels.

Surface air data (e.g., wind direction, wind speed, temperature, and precipitation) have been obtained from station 21 of the Hanford Meteorological Monitoring Network, which is located in the 200-East Area within 1 mi of WTP. The surface data is read into the model in CD-144 format.

Upper air data used to calculate mixing heights was obtained from the National Weather Service station number 04106 in Spokane, Washington, which is representative of upper air east of the Cascade Mountains. The upper air data is read into the model in FSL format.

AERMAP

The AERMAP preprocessor required input of 10-Meter Digital Elevation Model (DEM) files, which were loaded from the Geomorphological Research Group[1] website at http://rocky.ess.washington.edu /data/raster/tenmeter/byquad/wallawalla/index.html (accessed February, 2006). The website contains free 10-meter DEM files for download into AERMAP. Review of the Washington State 10-meter DEMs plot shows that the Walla Walla quadrangle contained the necessary DEM files for the Hanford Site boundary. Figure 9-3 lists the DEM file numbers used in the modeling analysis.

Figure 9-3 Map and Listing of DEM Files

Map of Washington counties courtesy of the United States Census Bureau, U.S. Department of Commerce.

1841 Beverly	1842 Beverly SE	1843 Smyra	1844 Wahatis Peak	1845 Corfu	1846 Taunton	1847 Othello
1941 Priest Rapids	1942 Priest Rapids NE	1943 Vernita Bridge	1944 Coyote Rapids	1945 Locke Island	1946 Hanford NE	1947 Eagle Lakes
2041 Cairn Hope Creek	2042 Emerson Nipple	2043 Riverland	2044 Gable Butte	2045 Hanford	2046 Savage Island	2047 Basin City
2141 Sulphur Spring	2142 Maiden Spring	2143 Snively Basin	2144 Iowa Flats	2145 Horn Rapids Dam	2146 Wooded Island	2147 Mathews Corner
2241 Grandview	2242 Sagebrush Ridge	2243 Snipes Creek	2244 Corral Canyon	2245 Benton City	2246 Richland	2247 Columbia Point
					2346 Badger Mountain	2347 Kennewick

Modeled Receptors

The modeling analysis used discrete receptor locations to identify the maximum impact for pollutant emissions. Because past modeling efforts showed prevailing winds to the east, a receptor grid with 500-meter spacing was extended 10 km around the eastern property boundary to be sure that the maximum impacts were identified. In addition, the Energy Northwest Columbia Generating Station was also considered since there is onsite public access. A receptor location near the city of West Richland

[1] Geomorphological Research Group operates under the Quaternary Research Center & Department of Earth and Space Sciences, Box 351310, University of Washington, Seattle, WA 98195-1310.

was also considered. A total of 1811 receptor locations were modeled to determine the highest ground-level concentration at an offsite receptor.

The model was run for the EMF stack using a unitized emission rate of 1 g/sec which yielded unitized results of 8.78767, 0.82655, and 0.02725 $\mu g \cdot s/g \cdot m^3$ for the 1-hr, 24-hr, and annual ambient air impacts, respectively. Results of the analysis showed that the maximum average impact sites are all located along the Hanford Site boundary to the east and east-northeast of the WTP site.

The resulting concentrations from the AERMOD model were multiplied by the EMF TAP emission rates. The resulting value was then compared to corresponding ASIL identified in WAC 173-460-150. Results showed that all TAP emissions, except dimethyl mercury, are below corresponding ASILs (Table 9-1).

10 Best Available Control Technology for Emissions of Toxic Air Pollutants

10.1 Selected T-BACT for the Effluent Management Facility

Pursuant to WAC 173-460-060(2), *Controls of New Sources of Toxic Air Pollutants: Control Technology Requirements*, a T-BACT analysis is required for TAP emissions in excess of de minimis levels. Estimated emissions from Section 9 show that several TAPs exceed de minimis levels (Table 9-1).

A *Best Available Control Technology Analysis for Toxic Air Pollutants for the WTP Effluent Management Facility*, 24590-WTP-RPT-ENV-15-005 was prepared using the "top-down" approach established for T-BACT. The approach consists of the following steps:

1. Identify all control technologies for an emissions source
2. Eliminate technically infeasible options
3. Rank remaining control technologies by control effectiveness
4. Evaluate most effective control(s) and document results
5. Select T-BACT.

The first step taken was to determine the quantity of TAP emissions from the EMF. As described in Section 8, the DVP was defined and evaluated as the unabated emission source from the EMF. The DVP system is comprised of two main parts: (1) the DEP system evaporator/condenser exhaust and (2) the DEP system vessel ventilation—which contributes the bulk of potential emissions. As previously described in Section 7.3.2, the ACV system also ventilates to the EMF emission unit; however, it is considered an insignificant source of TAP emissions, and any potential emissions are bound by the conservative assumptions integrated into the DVP emission source. As a result, the ACV system is not considered in the T-BACT evaluation.

As described in Section 5.1.2, to address potential radioactive emissions from the EMF, a best available radioactive control technology (BARCT) analysis was performed in parallel with the T-BACT analysis and is documented in 24590-WTP-RPT-ENV-15-004, *Best Available Radionuclide Control Technology, Analysis Addendum for the WTP Effluent Management Facility*. The BARCT selected HEPA filtration for the control of radionuclide emissions from the EMF emission sources. The BARCT analysis will accompany the radioactive air emissions NOC permit application submittal to WDOH (24590-WTP-RPT-

ENV-15-008, *Radioactive Air Emissions Notice of Construction Permit Application for the WTP Effluent Management Facility*), previously described in Section 5.1.2.

The EMF T-BACT includes a detailed evaluation of available emission control technologies for the TAPs exceeding de minimis levels. After an effectiveness analysis, the cost per ton of pollutants removed was considered. For control of particulate and aerosol emissions, HEPA filtration was selected. The dual-stage HEPA filters on the DVP system will provide a combined particulate removal efficiency greater than 99.9995% (removal efficiency of 99.95% for single-stage filtration and 99.9995% for dual-stage filtration).

The T-BACT also considered control technologies available for the removal of inorganic gases, including dimethyl mercury and volatile organic compounds. Toxic inorganic gases and volatile organic compounds were estimated to be emitted from the EMF in low quantities (Table 9-1). It was determined that in order to remove these pollutants, the cost per ton to remove the pollutants would exceed the cost ceiling effectiveness threshold established by Ecology in previously approved permitting efforts on the Hanford Site (WRPS 2010). Therefore, due to the extremely low emissions rates and prohibitive cost per ton to remove these pollutants, no T-BACT is proposed for removal of toxic organic gases or volatile organic compound emissions from EMF.

The selected T-BACT for the EMF emissions is identified in Table 10-1 and illustrated in Figure 10-1.

Table 10-1 Proposed T-BACT for New EMF Emission Unit

Facility	Emission Source	Flue Name	Proposed T-BACT Controls		
			Inorganic Gases (Ammonia and Dimethyl Mercury)	Particulates and Aerosols	Volatile Organics
EMF	DVP vessel vent and process system	EMF stack	N/A	HEPA (dual)	N/A
	ACV system [1]		N/A	HEPA	N/A

[1] The ACV system is considered a de minimis source of TAP emissions. A separate BARCT analysis selected HEPA filtration for control of particulate and aerosol radionuclide emissions.

Figure 10-1 Evaporator Process Vessel Vent (DVP) Controls

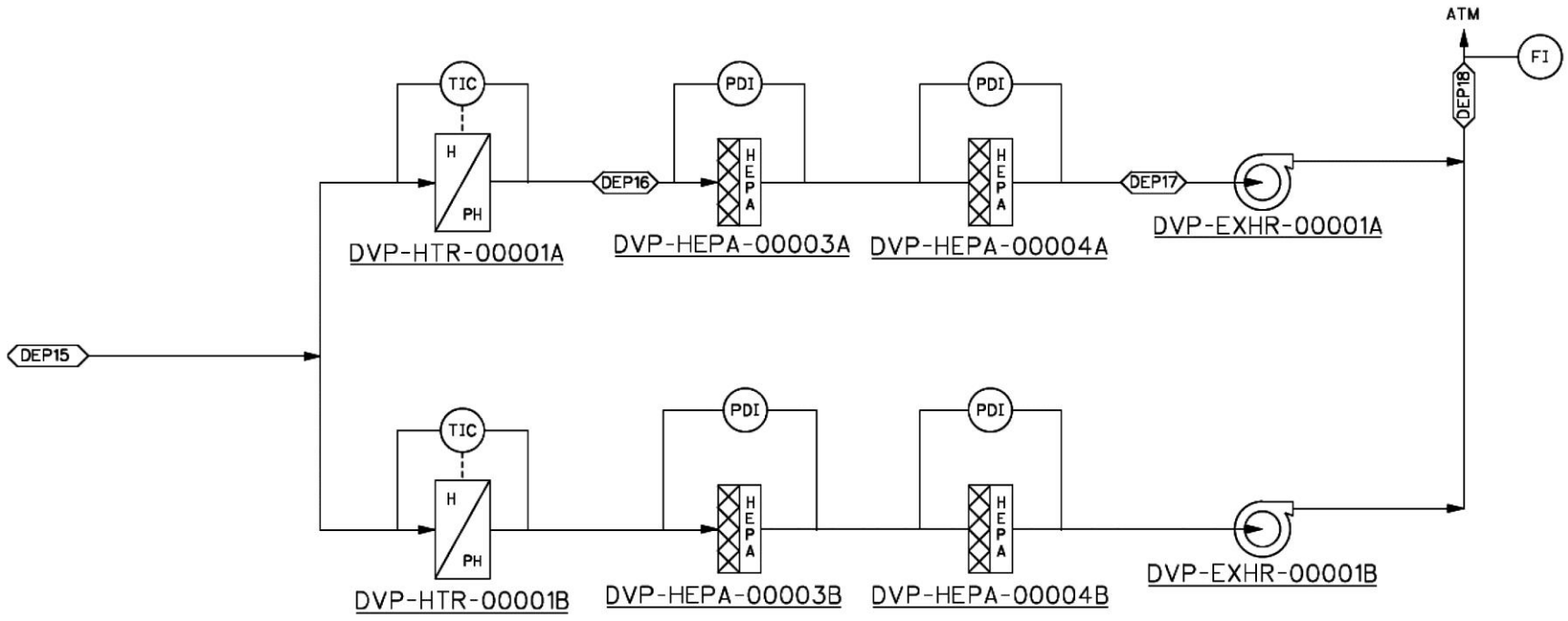

11 References

11.1 Project Documents

24590-BOF-M4C-DEP-00001, Rev A, *DFLAW Effluent Management Facility Air Emissions Estimate*.

24590-BOF-M8C-C3V-00002, Rev A, *EMF Stack Height Evaluation Calculation*.

0-BOF-P1-25-00001, *Balance of Facilities LAW Effluent Process Bldg & LAW Effluent Drain Tank Bldg General Arrangement Plan at Elev 0 Ft - 0 In.*

24590-BOF-P1-26-00002, Rev 0, *Balance of Facilities LAW Effluent Utility Bldg & LAW Effluent Electrical Bldg General Arrangement Sections A and B.*

24590-RMCD-04990, *Air Model Run for Nonrad NOC Permit 24590-WTP-RPT-ENV-15-007.*

24590-WTP-BODCN-ENG-15-0016, *Updates to Incorporate DFLAW Content.*

24590-WTP-RPT-ENV-01-009, Rev 1, *Nonradioactive Air Emissions Notice of Construction Permit Application for the Hanford Tank Waste Treatment and Immobilization Plant*.

24590-WTP-RPT-ENV-12-002, Rev 1, *Nonradioactive Air Emissions Notice of Construction Permit Application Supplement to DE02NWP-002*.

24590-WTP-RPT-ENV-15-004, *Best Available Radionuclide Control Technology Analysis Addendum for the WTP Effluent Management Facility*.

24590-WTP-RPT-ENV-15-005, *Best Available Control Technology Analysis for Toxic Air Pollutants for the WTP Effluent Management Facility*.

24590-WTP-RPT-ENV-15-008, *Radioactive Air Emissions Notice of Construction Permit Application for the WTP Effluent Management Facility*.

CCN 258062, letter, J. Hedges (Ecology) to K. Smith (DOE-ORP), *Notice of Construction Approval Order for Diesel Turbines and Fire Pumps at the Waste Treatment Plant.* April 24, 2013.

CCN 285554, email, R Haggard (BNI) to WTP PDC, *Ecology Confirmation that EMF Not Subject to PSD Permitting*. March 14, 2016.

CCN 290160, letter, C. Hanlon-Meyer (Ecology) to R. Skinnerland (DOE-ORP), *Second Tier Petition by the U.S. Department of Energy*. January 21, 2016.

11.2 Codes and Standards

40 CFR 60. *Standards of Performance for New Stationary Sources*. Code of Federal Regulations.

40 CFR 63. *National Emission Standards for Hazardous Air Pollutants for Source Categories*. Code of Federal Regulations.

RCW 43.21C. *State Environmental Policy*. Revised Code of Washington, Olympia, WA.

RCW 43.21C.150. *State Environmental Policy: RCW 43.21C.030(2)(c) Inapplicable When Statement Previously Prepared Pursuant to National Environmental Policy Act.* Revised Code of Washington, Olympia, WA.

RCW 43.21C.030(2)(c). *State Environmental Policy: Guidelines for State Agencies, Local Governments—Statements—Reports—Advice—Information*. Revised Code of Washington, Olympia, WA.

RCW 70.94.011. *Washington Clean Air Act: Declaration of Public Policies and Purpose.* Revised Code of Washington, Olympia, WA.

WAC 173-400. *General Regulations for Air Pollution Sources*. Washington Administrative Code, Olympia, WA.

WAC 173-400-110, *General Regulations for Air Pollution Sources: Dangerous Waste Regulation-New Source Review (NSR) for Sources and Portable Sources.* Washington Administrative Code, Olympia, WA.

WAC 173-401. *Operating Permit Regulation*. Washington Administrative Code, Olympia, WA.

WAC 173-460. *Controls for New Sources of Toxic Air Pollutants*. Washington Administrative Code, Olympia, WA.

WAC 173-460-040. *Controls for New Sources of Toxic Air Pollutants: New Source Review*. Washington Administrative Code, Olympia, WA.

WAC 173-460-060. *Controls for New Sources of Toxic Air Pollutants: Control Technology Requirements.* Washington Administrative Code, Olympia, WA.

WAC 173-460-090. *Controls for New Sources of Toxic Air Pollutants: Second Tier Review*. Washington Administrative Code, Olympia, WA.

WAC 173-460-150. *Controls for New Sources of Toxic Air Pollutants: Table of ASIL, SQER, and De Minimis Emission Values.* Washington Administrative Code, Olympia, WA.

WAC 197-11. *SEPA Rules*. Washington Administrative Code, Olympia, WA.

WAC 246-247. *Radiation Protection—Air Emissions.* Washington Administrative Code, Olympia, WA.

WAC 246-247-110. *Radiation Protection—Air Emissions: Appendix A—Application Information Requirements*. Washington Administrative Code, Olympia, WA.

11.3 Other

DOE. 2012. *Final Tank Closure and Waste Management Environmental Impact Statement for the Hanford Site, Richland, Washington (TC & WM EIS)*, DOE/EIS-0391. US Department of Energy, Office of River Protection, Richland, WA.

Ecology. 2013a. *Notice of Construction Application*, form ECY 070-410. Washington State Department of Ecology, Olympia, WA.

Ecology. 2013b. *Prevention of Significant Deterioration (PSD) PSD-02-01 Amendment 2*. Washington State Department of Ecology, Olympia, WA.

Ecology. 2013c. *Hanford Air Operating Permit 00-05-006*. Washington State Department of Ecology, Olympia, WA.

EPA. 1990. *Clean Air Act*, 42 U.S.C. 7401 et seq. US Environmental Protection Agency, Washington, DC.

EPA. 2015. *AERMOD Version 15181*. Support Center for Regulatory Atmospheric Modeling US Environmental Protection Agency, Washington, DC.

Providence/Oris. 2015. *BEEST Suite, version 11.03*. Providence Engineering and Environmental Group LLC. Austin, TX.

WRPS. 2010. *Evaluation of Best Available Control Technology for Toxics (tBACT) Double Shell Tank Farms Primary Ventilation Systems Supporting Waste Transfer Operations*. June 24, 2010. (http://www.ecy.wa.gov/programs/nwp/PI/PDF/Comment_Periods/AY-102/DE11NWP-001_Rev_3_App_B.pdf).

WRPS. 2015. *Second Tier Review Petition for Hanford Tank Farm and Waste Treatment Plant Dimethyl Mercury Emissions*, RPP-ENV-59016, Rev 1 (Second-Tier Review Petition). Washington River Protection Solutions, LLC, Richland, WA.

WRPS. 2016. *Feed Vector Development in Support of WTP Environmental Risk Assessment Activities*, RPP-RPT-58656, Rev. 0, Washington River Protection Solutions, LLC, Richland, WA.

Appendix A

Emissions Estimates Summary Supporting EMF Nonradioactive Air Emissions NOC Permit Application

Table A-1 Toxic Air Pollutant Emissions from EMF

CAS #	Constituents of Potential Concern	Unabated Emissions [a] (g/sec)	Abated Emissions [a] (g/sec)	Averaging Period	Unabated Emissions (lb/ averaging period)	Above De Minimis?	Abated Emissions (lb/ averaging period)	Above SQER?	Ambient Air Impact 1-hr. Conc. [b] (µg/m³)	Ambient Air Impact 24-hr. Conc. [b] (µg/m³)	Ambient Air Impact Annual Conc. [b] (µg/m³)	ASIL (µg/m³)	Above ASIL?
100-41-4	Ethylbenzene	3.34E-10	3.34E-10	year	2.32E-05	No	2.32E-05	No	2.93E-09	2.76E-10	**9.10E-12**	4.00E-01	No
100-42-5	Styrene	5.91E-10	1.60E-10	24-hr	1.13E-07	No	3.05E-08	No	1.41E-09	**1.32E-10**	4.36E-12	9.00E+02	No
100-44-7	Benzyl chloride	4.31E-10	2.15E-15	year	3.00E-05	No	1.50E-10	No	1.89E-14	1.78E-15	**5.87E-17**	2.04E-02	No
101-77-9	4,4-Methylenedianiline	4.31E-10	2.15E-15	year	3.00E-05	No	1.50E-10	No	1.89E-14	1.78E-15	**5.87E-17**	2.17E-03	No
103-33-3	Azobenzene	4.31E-10	2.15E-15	year	3.00E-05	No	1.50E-10	No	1.89E-14	1.78E-15	**5.87E-17**	3.23E-02	No
10595-95-6	N-Nitrosomethylethylamine	1.69E-05	1.69E-05	year	1.17E+00	Yes	1.17E+00	Yes	1.48E-04	1.39E-05	**4.60E-07**	1.59E-04	No
106-44-5	p-Cresol (4-methyl phenol)	4.31E-10	2.15E-15	24-hr	8.21E-08	No	4.10E-13	No	1.89E-14	**1.78E-15**	5.87E-17	6.00E+02	No
106-46-7	1,4-Dichlorobenzene	1.02E-07	1.01E-07	year	7.08E-03	No	7.05E-03	No	8.91E-07	8.38E-08	**2.76E-09**	9.09E-02	No
106-88-7	1,2-Epoxybutane	1.69E-05	1.69E-05	24-hr	3.21E-03	No	3.21E-03	No	1.48E-04	**1.39E-05**	4.60E-07	2.00E+01	No
106-89-8	Epichlorohydrin (1-chloro-2,3 epoxypropane)	4.31E-10	2.15E-15	year	3.00E-05	No	1.50E-10	No	1.89E-14	1.78E-15	**5.87E-17**	4.35E-02	No
106-93-4	Ethylene dibromide	1.60E-10	1.60E-10	year	1.11E-05	No	1.11E-05	No	1.41E-09	1.32E-10	**4.36E-12**	1.41E-02	No
106-99-0	1,3-Butadiene	5.37E-09	5.37E-09	year	3.73E-04	No	3.73E-04	No	4.72E-08	4.44E-09	**1.46E-10**	5.88E-03	No
107-02-8	Acrolein	8.68E-09	8.68E-09	24-hr	1.65E-06	No	1.65E-06	No	7.63E-08	**7.17E-09**	2.36E-10	6.00E-02	No
107-05-1	3-Chloropropene	5.91E-10	5.91E-10	year	4.11E-05	No	4.11E-05	No	5.19E-09	4.88E-10	**1.61E-11**	1.67E-01	No
107-06-2	1,2-Dichloroethane	6.18E-10	1.87E-10	year	4.30E-05	No	1.30E-05	No	1.64E-09	1.55E-10	**5.10E-12**	3.85E-02	No
107-13-1	Acrylonitrile	6.34E-09	5.91E-09	year	4.41E-04	No	4.11E-04	No	5.19E-08	4.88E-09	**1.61E-10**	3.45E-03	No
107-21-1	Ethylene glycol (1,2-ethanediol)	4.31E-10	2.15E-15	24-hr	8.21E-08	No	4.10E-13	No	1.89E-14	**1.78E-15**	5.87E-17	4.00E+02	No
107-98-2	Propylene glycol monomethyl ether	4.31E-10	2.15E-15	24-hr	8.21E-08	No	4.10E-13	No	1.89E-14	**1.78E-15**	5.87E-17	7.00E+03	No
108-05-4	vinyl acetate	1.69E-05	1.69E-05	24-hr	3.21E-03	No	3.21E-03	No	1.48E-04	**1.39E-05**	4.60E-07	2.00E+02	No
108-10-1	Hexone	2.09E-09	2.09E-09	24-hr	3.97E-07	No	3.97E-07	No	1.83E-08	**1.72E-09**	5.68E-11	3.00E+03	No
108-39-4	m-Cresol	4.29E-05	4.29E-05	24-hr	8.18E-03	No	8.18E-03	No	3.77E-04	**3.55E-05**	1.17E-06	6.00E+02	No
108-88-3	Toluene	1.26E-09	8.34E-10	24-hr	2.41E-07	No	1.59E-07	No	7.33E-09	**6.89E-10**	2.27E-11	5.00E+03	No
108-90-7	Chlorobenzene	6.23E-10	1.93E-10	24-hr	1.19E-07	No	3.67E-08	No	1.69E-09	**1.59E-10**	5.25E-12	1.00E+03	No
108-95-2	Phenol	1.34E-07	1.34E-07	24-hr	2.56E-05	No	2.55E-05	No	1.18E-06	**1.11E-07**	3.65E-09	2.00E+02	No
109-86-4	2-Methoxyethanol	4.31E-10	2.15E-15	24-hr	8.21E-08	No	4.10E-13	No	1.89E-14	**1.78E-15**	5.87E-17	6.00E+01	No
110-54-3	Hexane	3.12E-08	3.12E-08	24-hr	5.93E-06	No	5.93E-06	No	2.74E-07	**2.57E-08**	8.49E-10	7.00E+02	No
110-80-5	2-Ethoxyethanol	1.13E-04	1.13E-04	24-hr	2.15E-02	No	2.15E-02	No	9.93E-04	**9.34E-05**	3.08E-06	7.00E+01	No
110-82-7	Cyclohexane	5.91E-10	5.91E-10	24-hr	1.12E-07	No	1.12E-07	No	5.19E-09	**4.88E-10**	1.61E-11	6.00E+03	No
111-15-9	Ethylene glycol monoethyl ether acetate	4.31E-10	2.15E-15	24-hr	8.21E-08	No	4.10E-13	No	1.89E-14	**1.78E-15**	5.87E-17	3.00E+02	No
111-44-4	Bis(2-chloroethyl)ether	4.31E-10	2.15E-15	year	3.00E-05	No	1.50E-10	No	1.89E-14	1.78E-15	**5.87E-17**	1.41E-03	No
111-76-2	2-Butoxyethanol	1.69E-05	1.69E-05	24-hr	3.21E-03	No	3.21E-03	No	1.48E-04	**1.39E-05**	4.60E-07	1.30E+04	No
1120-71-4	1,3-Propane sultone	4.31E-10	2.15E-15	year	3.00E-05	No	1.50E-10	No	1.89E-14	1.78E-15	**5.87E-17**	1.45E-03	No
117-81-7	Bis(2-ethylhexyl)phthalate	1.69E-05	1.69E-05	year	1.17E+00	Yes	1.17E+00	No	1.48E-04	1.39E-05	**4.60E-07**	4.17E-02	No

Table A-1 Toxic Air Pollutant Emissions from EMF

CAS #	Constituents of Potential Concern	Unabated Emissions [a] (g/sec)	Abated Emissions [a] (g/sec)	Averaging Period	Unabated Emissions (lb/ averaging period)	Above De Minimis?	Abated Emissions (lb/ averaging period)	Above SQER?	Ambient Air Impact 1-hr. Conc. [b] (µg/m³)	Ambient Air Impact 24-hr. Conc. [b] (µg/m³)	Ambient Air Impact Annual Conc. [b] (µg/m³)	ASIL (µg/m³)	Above ASIL?
118-74-1	Hexachlorobenzene	4.31E-10	2.15E-15	year	3.00E-05	No	1.50E-10	No	1.89E-14	1.78E-15	**5.87E-17**	1.96E-03	No
121-14-2	2,4-Dinitrotoluene	2.29E-08	2.27E-08	year	1.59E-03	No	1.58E-03	No	2.00E-07	1.88E-08	**6.20E-10**	1.12E-02	No
122-66-7	1,2-Diphenylhydrazine	4.31E-10	2.15E-15	year	3.00E-05	No	1.50E-10	No	1.89E-14	1.78E-15	**5.87E-17**	4.00E-03	No
123-91-1	1,4-Dioxane	5.91E-09	5.91E-09	year	4.11E-04	No	4.11E-04	No	5.19E-08	4.88E-09	**1.61E-10**	1.30E-01	No
124-48-1	Chlorodibromomethane	4.31E-10	2.15E-15	year	3.00E-05	No	1.50E-10	No	1.89E-14	1.78E-15	**5.87E-17**	3.70E-02	No
127-18-4	Tetrachloroethene	1.95E-10	1.95E-10	year	1.35E-05	No	1.35E-05	No	1.71E-09	1.61E-10	**5.30E-12**	1.69E-01	No
133-06-2	Captan	4.31E-10	2.15E-15	year	3.00E-05	No	1.50E-10	No	1.89E-14	1.78E-15	**5.87E-17**	1.52E+00	No
1336-36-3	Aroclors (Total PCB)	2.59E-05	2.59E-05	year	1.80E+00	Yes	1.80E+00	Yes	2.28E-04	2.14E-05	**7.07E-07**	1.75E-03	No
156-60-5	1,2-trans-Dichloroethene	1.69E-05	1.69E-05	24-hr	3.21E-03	No	3.21E-03	No	1.48E-04	**1.39E-05**	4.60E-07	8.07E+02	No
1634-04-4	tert-Butyl methyl ether	1.69E-05	1.69E-05	year	1.17E+00	No	1.17E+00	No	1.48E-04	1.39E-05	**4.60E-07**	3.85E+00	No
1746-01-6	2,3,7,8-Tetrachlorodibenzo(p)dioxin (TCDD)	5.65E-17	2.82E-22	year	3.93E-12	No	1.96E-17	No	2.48E-21	2.33E-22	**7.70E-24**	2.63E-08	No
189-55-9	Dibenzo[a,i]pyrene	1.69E-05	1.69E-05	year	1.17E+00	Yes	1.17E+00	Yes	1.48E-04	1.39E-05	**4.60E-07**	9.09E-05	No
189-64-0	Dibenzo[a,h]pyrene	1.69E-05	1.69E-05	year	1.17E+00	Yes	1.17E+00	Yes	1.48E-04	1.39E-05	**4.60E-07**	9.09E-05	No
191-30-0	Dibenzo(a,l)pyrene	1.69E-05	1.69E-05	year	1.17E+00	Yes	1.17E+00	Yes	1.48E-04	1.39E-05	**4.60E-07**	9.09E-05	No
192-65-4	Dibenzo[a,e]pyrene	1.69E-05	1.69E-05	year	1.17E+00	Yes	1.17E+00	Yes	1.48E-04	1.39E-05	**4.60E-07**	9.09E-04	No
193-39-5	Indeno(1,2,3-cd)pyrene	1.69E-05	1.69E-05	year	1.17E+00	Yes	1.17E+00	No	1.48E-04	1.39E-05	**4.60E-07**	9.09E-03	No
19408-74-3	1,2,3,7,8,9-Hexachlorodibenzo(p)dioxin	4.44E-16	2.22E-21	year	3.08E-11	No	1.54E-16	No	1.95E-20	1.83E-21	**6.04E-23**	2.63E-07	No
205-82-3	Benzo[j]fluoranthene	1.00E-09	5.00E-15	year	6.95E-05	No	3.48E-10	No	4.39E-14	4.13E-15	**1.36E-16**	9.09E-03	No
205-99-2	Benzo(b)fluoranthene	8.29E-11	4.15E-16	year	5.77E-06	No	2.88E-11	No	3.64E-15	3.43E-16	**1.13E-17**	9.09E-03	No
207-08-9	Benzo(k)fluoranthene	1.80E-09	9.02E-15	year	1.25E-04	No	6.27E-10	No	7.93E-14	7.46E-15	**2.46E-16**	9.09E-03	No
218-01-9	Chrysene	6.78E-10	3.39E-15	year	4.71E-05	No	2.36E-10	No	2.98E-14	2.80E-15	**9.24E-17**	9.09E-02	No
224-42-0	Dibenz[a,j]acridine	1.69E-05	1.69E-05	year	1.17E+00	Yes	1.17E+00	No	1.48E-04	1.39E-05	**4.60E-07**	9.09E-03	No
226-36-8	Dibenz[a,h]acridine	1.69E-05	1.69E-05	year	1.17E+00	Yes	1.17E+00	No	1.48E-04	1.39E-05	**4.60E-07**	9.09E-03	No
31508-00-6	2,3',4,4',5-Pentachlorobiphenyl (PCB 118)	7.13E-14	3.56E-19	year	4.96E-09	No	2.48E-14	No	3.13E-18	2.95E-19	**9.71E-21**	2.63E-04	No
319-84-6	alpha-BHC	4.31E-10	2.15E-15	year	3.00E-05	No	1.50E-10	No	1.89E-14	1.78E-15	**5.87E-17**	1.30E-03	No
319-85-7	beta-BHC	2.44E-12	1.22E-17	year	1.70E-07	No	8.48E-13	No	1.07E-16	1.01E-17	**3.32E-19**	2.33E-03	No
32598-13-3	3,3',4,4'-Tetrachlorobiphenyl (PCB 77)	5.98E-15	2.99E-20	year	4.16E-10	No	2.08E-15	No	2.63E-19	2.47E-20	**8.15E-22**	2.63E-04	No
32598-14-4	2,3,3',4,4'-Pentachlorobiphenyl (PCB 105)	3.04E-15	1.52E-20	year	2.12E-10	No	1.06E-15	No	1.34E-19	1.26E-20	**4.15E-22**	2.63E-04	No
3268-87-9	Octachlorodibenzo(p)dioxin	8.00E-11	4.00E-16	year	5.56E-06	No	2.78E-11	No	3.52E-15	3.31E-16	**1.09E-17**	2.63E-04	No
32774-16-6	3,3',4,4',5,5'-Hexachlorobiphenyl (PCB 169)	4.06E-17	2.03E-22	year	2.82E-12	No	1.41E-17	No	1.78E-21	1.68E-22	**5.53E-24**	2.63E-04	No
35822-46-9	1,2,3,4,6,7,8-Heptachlorodibenzo(p)dioxin	7.83E-12	3.91E-17	year	5.44E-07	No	2.72E-12	No	3.44E-16	3.23E-17	**1.07E-18**	2.63E-06	No
3697-24-3	5-Methylchrysene	1.69E-05	1.69E-05	year	1.17E+00	Yes	1.17E+00	Yes	1.48E-04	1.39E-05	**4.60E-07**	9.09E-04	No
38380-08-4	2,3,3',4,4',5-Hexachlorobiphenyl (PCB 156)	1.94E-15	9.68E-21	year	1.35E-10	No	6.73E-16	No	8.51E-20	8.00E-21	**2.64E-22**	5.26E-05	No

Table A-1 Toxic Air Pollutant Emissions from EMF

CAS #	Constituents of Potential Concern	Unabated Emissions [a] (g/sec)	Abated Emissions [a] (g/sec)	Averaging Period	Unabated Emissions (lb/ averaging period)	Above De Minimis?	Abated Emissions (lb/ averaging period)	Above SQER?	Ambient Air Impact 1-hr. Conc. [b] (µg/m³)	Ambient Air Impact 24-hr. Conc. [b] (µg/m³)	Ambient Air Impact Annual Conc. [b] (µg/m³)	ASIL (µg/m³)	Above ASIL?
39001-02-0	Octachlorodibenzofuran	3.41E-11	1.70E-16	year	2.37E-06	No	1.19E-11	No	1.50E-15	1.41E-16	**4.65E-18**	2.63E-04	No
39227-28-6	1,2,3,4,7,8-Hexachlorodibenzo(p)dioxin	1.91E-16	9.55E-22	year	1.33E-11	No	6.64E-17	No	8.39E-21	7.89E-22	**2.60E-23**	2.63E-07	No
39635-31-9	2,3,3',4,4',5,5'-Heptachlorobiphenyl (PCB 189)	5.96E-16	2.98E-21	year	4.15E-11	No	2.07E-16	No	2.62E-20	2.46E-21	**8.13E-23**	2.63E-04	No
40321-76-4	1,2,3,7,8-Pentachlorodibenzo(p)dioxin	1.25E-16	6.23E-22	year	8.67E-12	No	4.33E-17	No	5.48E-21	5.15E-22	**1.70E-23**	2.63E-08	No
50-00-0	Formaldehyde	1.69E-05	1.69E-05	year	1.17E+00	No	1.17E+00	No	1.48E-04	1.39E-05	**4.60E-07**	1.67E-01	No
50-32-8	Benzo(a)pyrene	6.81E-09	6.77E-09	year	4.74E-04	No	4.71E-04	No	5.95E-08	5.60E-09	**1.85E-10**	9.09E-04	No
510-15-6	Chlorobenzilate	3.29E-10	1.65E-15	year	2.29E-05	No	1.14E-10	No	1.45E-14	1.36E-15	**4.49E-17**	3.23E-02	No
51207-31-9	2,3,7,8-Tetrachlorodibenzofuran	2.67E-11	1.34E-16	year	1.86E-06	No	9.29E-12	No	1.17E-15	1.10E-16	**3.64E-18**	2.63E-07	No
51-79-6	Ethyl carbamate (urethane)	4.31E-10	2.15E-15	year	3.00E-05	No	1.50E-10	No	1.89E-14	1.78E-15	**5.87E-17**	3.45E-03	No
52663-72-6	2,3',4,4',5,5'-Hexachlorobiphenyl (PCB 167)	1.03E-15	5.13E-21	year	7.14E-11	No	3.57E-16	No	4.51E-20	4.24E-21	**1.40E-22**	2.63E-04	No
532-27-4	2-Chloroacetophenone	4.31E-10	2.15E-15	24-hr	8.21E-08	No	4.10E-13	No	1.89E-14	**1.78E-15**	5.87E-17	3.00E-02	No
53-70-3	Dibenz[a,h]anthracene	3.82E-09	1.45E-09	year	2.66E-04	No	1.01E-04	No	1.28E-08	1.20E-09	**3.96E-11**	8.33E-04	No
540-73-8	1,2-Dimethylhydrazine	4.31E-10	2.15E-15	year	3.00E-05	No	1.50E-10	No	1.89E-14	1.78E-15	**5.87E-17**	6.25E-06	No
542-75-6	1,3-Dichloropropene	4.31E-10	2.15E-15	year	3.00E-05	No	1.50E-10	No	1.89E-14	1.78E-15	**5.87E-17**	6.25E-02	No
542-88-1	Bis(chloromethyl)ether	4.31E-10	2.15E-15	year	3.00E-05	No	1.50E-10	No	1.89E-14	1.78E-15	**5.87E-17**	7.69E-05	No
55673-89-7	1,2,3,4,7,8,9-Heptachlorodibenzofuran	1.53E-16	7.63E-22	year	1.06E-11	No	5.30E-17	No	6.70E-21	6.30E-22	**2.08E-23**	2.63E-06	No
56-23-5	Carbon tetrachloride	7.36E-10	3.05E-10	year	5.12E-05	No	2.12E-05	No	2.68E-09	2.52E-10	**8.32E-12**	2.38E-02	No
56-49-5	3-Methylcholanthrene	1.69E-05	1.69E-05	year	1.17E+00	Yes	1.17E+00	Yes	1.48E-04	1.39E-05	**4.60E-07**	1.59E-04	No
56-55-3	Benzo(a)anthracene	1.29E-09	6.45E-15	year	8.97E-05	No	4.48E-10	No	5.67E-14	5.33E-15	**1.76E-16**	9.09E-03	No
57117-31-4	2,3,4,7,8-Pentachlorodibenzofuran	2.44E-11	1.22E-16	year	1.70E-06	Yes	8.49E-12	No	1.07E-15	1.01E-16	**3.33E-18**	5.26E-08	No
57117-41-6	1,2,3,7,8-Pentachlorodibenzofuran	6.67E-11	3.33E-16	year	4.63E-06	No	2.32E-11	No	2.93E-15	2.75E-16	**9.08E-18**	5.26E-07	No
57117-44-9	1,2,3,6,7,8-Hexachlorodibenzofuran	1.02E-11	5.09E-17	year	7.07E-07	No	3.54E-12	No	4.47E-16	4.20E-17	**1.39E-18**	2.63E-07	No
57465-28-8	3,3',4,4',5-Pentachlorobiphenyl (PCB 126)	1.35E-16	6.73E-22	year	9.36E-12	No	4.68E-17	No	5.92E-21	5.57E-22	**1.83E-23**	2.63E-07	No
57653-85-7	1,2,3,6,7,8,-Hexachlorodibenzo(p)dioxin	4.20E-16	2.10E-21	year	2.92E-11	No	1.46E-16	No	1.84E-20	1.73E-21	**5.72E-23**	2.63E-07	No
57-74-9	Chlordane	1.71E-11	8.54E-17	year	1.19E-06	No	5.93E-12	No	7.50E-16	7.06E-17	**2.33E-18**	2.94E-03	No
584-84-9	2,4-Toluene diisocyanate	4.31E-10	2.15E-15	24-hr	8.21E-08	No	4.10E-13	No	1.89E-14	**1.78E-15**	5.87E-17	7.00E-02	No
58-89-9	gamma-BHC (Lindane)	4.31E-10	2.15E-15	year	3.00E-05	No	1.50E-10	No	1.89E-14	1.78E-15	**5.87E-17**	3.23E-03	No
593-60-2	Bromoethene (Vinyl bromide)	4.31E-10	2.15E-15	24-hr	8.21E-08	No	4.10E-13	No	1.89E-14	**1.78E-15**	5.87E-17	3.00E+00	No
59-89-2	Morpholine, 4-Nitroso-	1.21E-08	1.21E-08	year	8.43E-04	No	8.43E-04	No	1.07E-07	1.00E-08	**3.30E-10**	5.26E-04	No
60-11-7	Dimethyl aminoazobenzene	1.12E-09	5.61E-15	year	7.80E-05	No	3.90E-10	No	4.93E-14	4.64E-15	**1.53E-16**	7.69E+04	No
602-87-9	5-Nitroacenaphthene	1.69E-05	1.69E-05	year	1.17E+00	Yes	1.17E+00	No	1.48E-04	1.39E-05	**4.60E-07**	2.70E-02	No
60-35-5	Acetamide	1.69E-05	1.69E-05	year	1.17E+00	Yes	1.17E+00	No	1.48E-04	1.39E-05	**4.60E-07**	5.00E-02	No
60851-34-5	2,3,4,6,7,8-Hexachlorodibenzofuran	1.43E-16	7.14E-22	year	9.93E-12	No	4.97E-17	No	6.28E-21	5.90E-22	**1.95E-23**	2.63E-07	No

Table A-1 Toxic Air Pollutant Emissions from EMF

CAS #	Constituents of Potential Concern	Unabated Emissions [a] (g/sec)	Abated Emissions [a] (g/sec)	Averaging Period	Unabated Emissions (lb/ averaging period)	Above De Minimis?	Abated Emissions (lb/ averaging period)	Above SQER?	Ambient Air Impact 1-hr. Conc. [b] (µg/m³)	Ambient Air Impact 24-hr. Conc. [b] (µg/m³)	Ambient Air Impact Annual Conc. [b] (µg/m³)	ASIL (µg/m³)	Above ASIL?
621-64-7	N-Nitroso-di-n-propylamine	4.89E-07	4.89E-07	year	3.40E-02	Yes	3.40E-02	No	4.30E-06	4.04E-07	**1.33E-08**	5.00E-04	No
624-83-9	Methyl isocyanate	4.31E-10	2.15E-15	24-hr	8.21E-08	No	4.10E-13	No	1.89E-14	**1.78E-15**	5.87E-17	1.00E+00	No
62-53-3	Aniline	4.31E-10	2.15E-15	year	3.00E-05	No	1.50E-10	No	1.89E-14	1.78E-15	**5.87E-17**	6.25E-01	No
62-75-9	N-Nitrosodimethylamine	2.10E-09	2.10E-09	year	1.46E-04	No	1.46E-04	No	1.84E-08	1.73E-09	**5.71E-11**	2.17E-04	No
630-20-6	1,1,1,2-Tetrachloroethane	1.69E-05	1.69E-05	year	1.17E+00	No	1.17E+00	No	1.48E-04	1.39E-05	**4.60E-07**	1.35E-01	No
65510-44-3	2',3,4,4',5-Pentachlorobiphenyl (PCB 123)	9.52E-17	4.76E-22	year	6.62E-12	No	3.31E-17	No	4.18E-21	3.93E-22	**1.30E-23**	2.63E-04	No
67-56-1	Methyl alcohol	1.69E-05	1.69E-05	24-hr	3.21E-03	No	3.21E-03	No	1.48E-04	**1.39E-05**	4.60E-07	4.00E+03	No
67562-39-4	1,2,3,4,6,7,8-Heptachlorodibenzofuran	2.12E-16	1.06E-21	year	1.47E-11	No	7.37E-17	No	9.32E-21	8.76E-22	**2.89E-23**	2.63E-06	No
67-63-0	Isopropyl alcohol	1.65E-08	1.65E-08	1-hr	1.31E-07	No	1.31E-07	No	**1.45E-07**	1.36E-08	4.49E-10	3.20E+03	No
67-66-3	Chloroform	6.31E-10	2.00E-10	year	4.39E-05	No	1.39E-05	No	1.76E-09	1.65E-10	**5.45E-12**	4.35E-02	No
67-72-1	Hexachloroethane	2.36E-06	2.36E-06	year	1.64E-01	No	1.64E-01	No	2.07E-05	1.95E-06	**6.43E-08**	9.09E-02	No
69782-90-7	2,3,3',4,4',5'-Hexachlorobiphenyl (PCB 157)	6.16E-16	3.08E-21	year	4.28E-11	No	2.14E-16	No	2.71E-20	2.55E-21	**8.39E-23**	5.26E-05	No
70362-50-4	3,4,4',5-Tetrachlorobiphenyl (PCB 81)	7.25E-17	3.62E-22	year	5.04E-12	No	2.52E-17	No	3.18E-21	3.00E-22	**9.88E-24**	2.63E-04	No
70648-26-9	1,2,3,4,7,8-Hexachlorodibenzofuran	4.09E-11	2.04E-16	year	2.84E-06	Yes	1.42E-11	No	1.80E-15	1.69E-16	**5.57E-18**	2.63E-07	No
71-43-2	Benzene	9.36E-10	5.05E-10	year	6.51E-05	No	3.51E-05	No	4.44E-09	4.17E-10	**1.38E-11**	3.45E-02	No
71-55-6	1,1,1-Trichloroethane	1.98E-10	1.98E-10	24-hr	3.77E-08	No	3.77E-08	No	1.74E-09	**1.63E-10**	5.39E-12	1.00E+03	No
72-55-9	4,4-DDE	1.69E-05	1.69E-05	year	1.17E+00	Yes	1.17E+00	No	1.48E-04	1.39E-05	**4.60E-07**	1.03E-02	No
72918-21-9	1,2,3,7,8,9-Hexachlorodibenzofuran	3.48E-13	1.74E-18	year	2.42E-08	No	1.21E-13	No	1.53E-17	1.44E-18	**4.74E-20**	2.63E-07	No
74472-37-0	2,3,4,4',5-Pentachlorobiphenyl (PCB 114)	1.22E-16	6.12E-22	year	8.51E-12	No	4.25E-17	No	5.38E-21	5.06E-22	**1.67E-23**	5.26E-05	No
74-83-9	Bromomethane	8.30E-10	3.99E-10	24-hr	1.58E-07	No	7.60E-08	No	3.51E-09	**3.30E-10**	1.09E-11	5.00E+00	No
74-87-3	Chloromethane	1.23E-09	7.95E-10	24-hr	2.34E-07	No	1.51E-07	No	6.99E-09	**6.57E-10**	2.17E-11	9.00E+01	No
75-00-3	Chloroethane	3.99E-10	3.99E-10	24-hr	7.60E-08	No	7.60E-08	No	3.51E-09	**3.30E-10**	1.09E-11	3.00E+04	No
75-01-4	Vinyl chloride	4.05E-10	4.05E-10	year	2.82E-05	No	2.82E-05	No	3.56E-09	3.35E-10	**1.10E-11**	1.28E-02	No
75-05-8	Acetonitrile	1.46E-07	1.46E-07	year	1.01E-02	No	1.01E-02	No	1.28E-06	1.20E-07	**3.97E-09**	6.00E+01	No
75-07-0	Acetaldehyde	1.69E-05	1.69E-05	year	1.17E+00	No	1.17E+00	No	1.48E-04	1.39E-05	**4.60E-07**	3.70E-01	No
75-09-2	Methylenechloride	1.19E-07	1.18E-07	year	8.26E-03	No	8.23E-03	No	1.04E-06	9.78E-08	**3.23E-09**	1.00E+00	No
75-21-8	Ethylene oxide (Oxirane)	3.44E-08	3.44E-08	year	2.39E-03	No	2.39E-03	No	3.02E-07	2.84E-08	**9.38E-10**	1.14E-02	No
75-25-2	Bromoform	4.31E-10	2.15E-15	year	3.00E-05	No	1.50E-10	No	1.89E-14	1.78E-15	**5.87E-17**	9.09E-01	No
75-27-4	Bromodichloromethane	1.69E-05	1.69E-05	year	1.17E+00	Yes	1.17E+00	No	1.48E-04	1.39E-05	**4.60E-07**	2.70E-02	No
75-34-3	1,1-Dichloroethane	1.60E-10	1.60E-10	year	1.11E-05	No	1.11E-05	No	1.41E-09	1.32E-10	**4.36E-12**	6.25E-01	No
75-35-4	1,1-Dichloroethene	2.52E-10	2.52E-10	24-hr	4.79E-08	No	4.79E-08	No	2.21E-09	**2.08E-10**	6.86E-12	2.00E+02	No
75-44-5	Phosgene (hydrogen phosphide)	4.31E-10	2.15E-15	24-hr	8.21E-08	No	4.10E-13	No	1.89E-14	**1.78E-15**	5.87E-17	3.00E-01	No
75-45-6	Chlorodifluoromethane	5.91E-10	5.91E-10	24-hr	1.12E-07	No	1.12E-07	No	5.19E-09	**4.88E-10**	1.61E-11	5.00E+04	No

Table A-1 Toxic Air Pollutant Emissions from EMF

CAS #	Constituents of Potential Concern	Unabated Emissions [a] (g/sec)	Abated Emissions [a] (g/sec)	Averaging Period	Unabated Emissions (lb/ averaging period)	Above De Minimis?	Abated Emissions (lb/ averaging period)	Above SQER?	Ambient Air Impact 1-hr. Conc. [b] (µg/m³)	Ambient Air Impact 24-hr. Conc. [b] (µg/m³)	Ambient Air Impact Annual Conc. [b] (µg/m³)	ASIL (µg/m³)	Above ASIL?
76-44-8	Heptachlor	4.31E-10	2.15E-15	year	3.00E-05	No	1.50E-10	No	1.89E-14	1.78E-15	**5.87E-17**	7.69E-05	No
77-47-4	Hexachlorocyclopentadiene	4.31E-10	2.15E-15	24-hr	8.21E-08	No	4.10E-13	No	1.89E-14	**1.78E-15**	5.87E-17	2.00E-01	No
78-87-5	1,2-Dichloropropane	1.60E-10	1.60E-10	year	1.11E-05	No	1.11E-05	No	1.41E-09	1.32E-10	**4.36E-12**	1.00E-01	No
78-93-3	2-Butanone	6.44E-08	6.40E-08	24-hr	1.23E-05	No	1.22E-05	No	5.62E-07	**5.29E-08**	1.74E-09	5.00E+03	No
79-00-5	1,1,2-Trichloroethane	1.87E-10	1.87E-10	year	1.30E-05	No	1.30E-05	No	1.65E-09	1.55E-10	**5.11E-12**	6.25E-02	No
79-01-6	Trichloroethene	6.44E-10	2.13E-10	year	4.48E-05	No	1.48E-05	No	1.87E-09	1.76E-10	**5.80E-12**	5.00E-01	No
79-10-7	2-Propenoic acid	1.69E-05	1.69E-05	24-hr	3.21E-03	No	3.21E-03	No	1.48E-04	**1.39E-05**	4.60E-07	1.00E+00	No
79-34-5	1,1,2,2-Tetrachloroethane	1.88E-10	1.88E-10	year	1.30E-05	No	1.30E-05	No	1.65E-09	1.55E-10	**5.11E-12**	1.72E-02	No
79-46-9	2-Nitropropane	3.95E-08	3.95E-08	24-hr	7.52E-06	No	7.52E-06	No	3.47E-07	**3.26E-08**	1.08E-09	2.00E+01	No
80-62-6	Methyl methacrylate	4.31E-10	2.15E-15	24-hr	8.21E-08	No	4.10E-13	No	1.89E-14	**1.78E-15**	5.87E-17	7.00E+02	No
822-06-0	Hexamethylene-1,5-diisocyanate	4.31E-10	2.15E-15	24-hr	8.21E-08	No	4.10E-13	No	1.89E-14	**1.78E-15**	5.87E-17	7.00E-02	No
85-44-9	Phthalic anhydride (1,2-benzenedicarboxylic anhydride)	4.31E-10	2.15E-15	24-hr	8.21E-08	No	4.10E-13	No	1.89E-14	**1.78E-15**	5.87E-17	2.00E+01	No
87-68-3	Hexachlorobutadiene	1.01E-07	1.01E-07	year	7.05E-03	No	7.05E-03	No	8.91E-07	8.38E-08	**2.76E-09**	4.55E-02	No
87-86-5	Pentachlorophenol	9.76E-08	9.76E-08	year	6.78E-03	No	6.78E-03	No	8.57E-07	8.06E-08	**2.66E-09**	2.17E-01	No
88-06-2	2,4,6-Trichlorophenol	1.68E-06	1.68E-06	year	1.17E-01	No	1.17E-01	No	1.48E-05	1.39E-06	**4.58E-08**	5.00E-02	No
90-04-0	o-Anisidine	4.31E-10	2.15E-15	year	3.00E-05	No	1.50E-10	No	1.89E-14	1.78E-15	**5.87E-17**	2.50E-02	No
91-20-3	Naphthalene	5.29E-05	5.29E-05	year	3.68E+00	Yes	3.68E+00	No	4.65E-04	4.37E-05	**1.44E-06**	2.94E-02	No
91-94-1	3,3'-Dichlorobenzidine	1.26E-09	6.29E-15	year	8.75E-05	No	4.37E-10	No	5.53E-14	5.20E-15	**1.71E-16**	2.94E-03	No
924-16-3	N-Nitroso-di-n-Buetylamine	4.31E-10	2.15E-15	year	3.00E-05	No	1.50E-10	No	1.89E-14	1.78E-15	**5.87E-17**	3.23E-04	No
94-59-7	Safrole (5-(2-Propenyl)-1,3-benzodioxole)	4.31E-10	2.15E-15	year	3.00E-05	No	1.50E-10	No	1.89E-14	1.78E-15	**5.87E-17**	1.59E-02	No
95-48-7	2-Methylphenol	5.96E-05	5.96E-05	24-hr	1.14E-02	No	1.14E-02	No	5.24E-04	**4.93E-05**	1.62E-06	6.00E+02	No
95-53-4	o-Toluidine	4.31E-10	2.15E-15	year	3.00E-05	No	1.50E-10	No	1.89E-14	1.78E-15	**5.87E-17**	1.96E-02	No
96-12-8	1,2-Dibromo-3-chloropropane	4.31E-10	2.15E-15	year	3.00E-05	No	1.50E-10	No	1.89E-14	1.78E-15	**5.87E-17**	5.26E-04	No
96-18-4	1,2,3-Trichloropropane	4.31E-10	2.15E-15	24-hr	8.21E-08	No	4.10E-13	No	1.89E-14	**1.78E-15**	5.87E-17	1.84E+00	No
96-45-7	Ethylene thiourea	4.31E-10	2.15E-15	year	3.00E-05	No	1.50E-10	No	1.89E-14	1.78E-15	**5.87E-17**	7.69E-02	No
98-82-8	Isopropylbenzene	1.69E-05	1.69E-05	24-hr	3.21E-03	No	3.21E-03	No	1.48E-04	**1.39E-05**	4.60E-07	4.00E+02	No
10028-15-6	Ozone	0.00E+00	0.00E+00	1-hr	0.00E+00	No	0.00E+00	No	0.00E+00	0.00E+00	0.00E+00	1.80E+02	No
10102-44-0	Nitrogen dioxide	0.00E+00	0.00E+00	1-hr	0.00E+00	No	0.00E+00	No	0.00E+00	0.00E+00	0.00E+00	4.70E+02	No
18540-29-9	Chromium VI	1.44E-05	7.20E-11	year	1.00E+00	Yes	5.00E-06	No	6.32E-10	5.95E-11	**1.96E-12**	6.67E-06	No
593-74-8	Dimethyl Mercury	5.29E-07	5.29E-07	24-hr	1.01E-04	Yes	1.01E-04	Yes	4.64E-06	**4.37E-07**	1.44E-08	1.00E-99	Yes
630-08-0	Carbon monoxide	0.00E+00	0.00E+00	1-hr	0.00E+00	No	0.00E+00	No	0.00E+00	0.00E+00	0.00E+00	2.30E+04	No
7439-97-6	Mercury	1.48E-07	7.38E-13	24-hr	2.81E-05	No	1.41E-10	No	6.49E-12	**6.10E-13**	2.01E-14	9.00E-02	No

Table A-1 Toxic Air Pollutant Emissions from EMF

CAS #	Constituents of Potential Concern	Unabated Emissions [a] (g/sec)	Abated Emissions [a] (g/sec)	Averaging Period	Unabated Emissions (lb/ averaging period)	Above De Minimis?	Abated Emissions (lb/ averaging period)	Above SQER?	Ambient Air Impact 1-hr. Conc. [b] (µg/m^3)	Ambient Air Impact 24-hr. Conc. [b] (µg/m^3)	Ambient Air Impact Annual Conc. [b] (µg/m^3)	ASIL (µg/m^3)	Above ASIL?
7440-43-9	Cadmium	4.06E-07	2.03E-12	year	2.82E-02	Yes	1.41E-07	No	1.78E-11	1.68E-12	**5.53E-14**	2.38E-04	No
7440-48-4	Cobalt	8.02E-08	4.01E-13	24-hr	1.53E-05	No	7.64E-11	No	3.52E-12	**3.31E-13**	1.09E-14	1.00E-01	No
7440-62-2	Vanadium	1.33E-07	6.63E-13	24-hr	2.53E-05	No	1.26E-10	No	5.83E-12	**5.48E-13**	1.81E-14	2.00E-01	No
7647-01-0	Hydrogen chloride	0.00E+00	0.00E+00	24-hr	0.00E+00	No	0.00E+00	No	0.00E+00	0.00E+00	0.00E+00	9.00E+00	No
7664-39-3	Hydrogen Fluoride	0.00E+00	0.00E+00	24-hr	0.00E+00	No	0.00E+00	No	0.00E+00	0.00E+00	0.00E+00	1.40E+01	No
7664-41-7	Ammonia	1.01E-01	1.01E-01	24-hr	1.92E+01	Yes	1.92E+01	Yes	8.84E-01	**8.32E-02**	2.74E-03	7.08E+01	No
7723-14-0	Phosphorus	0.00E+00	0.00E+00	24-hr	0.00E+00	No	0.00E+00	No	0.00E+00	0.00E+00	0.00E+00	2.00E+01	No
7782-41-4	Fluorine gas	0.00E+00	0.00E+00	24-hr	0.00E+00	No	0.00E+00	No	0.00E+00	0.00E+00	0.00E+00	1.58E+01	No
7782-50-5	Chlorine	0.00E+00	0.00E+00	24-hr	0.00E+00	No	0.00E+00	No	0.00E+00	0.00E+00	0.00E+00	2.00E-01	No

[a] Blue font indicates constituents with assumed emission rates (refer to Section 9.1).

[b] The ambient air impact was determined by multiplying the abated emissions by the air modeling results for the 1-hr, 24-hr, and annual averaging periods (8.78767, 0.82655, and 0.02725 µg·s/g·m^3, respectively). Bold font indicates the appropriate Ambient Air Impact for comparison with the ASIL.

[c] It is proposed that the Second-Tier Review Petition, which was previously reviewed and approved by Ecology on January 21, 2016, be used to satisfy WAC 173-460-090 requirements for dimethyl mercury for this application. The Second-Tier Review Petition is a bounding dimethyl mercury health impact assessment that covers the emissions from the activities proposed in this application (Section 9.2.1).