Issued by
RPP-WTP PDC

Best Available Control Technology Analysis for Toxic Air Pollutants for the WTP Effluent Management Facility

Document title: Best Available Control Technology Analysis for Toxic Air Pollutants for the WTP Effluent Management Facility

Document number: 24590-WTP-RPT-ENV-15-005, Rev 0

Contract number: DE-AC27-01RV14136

Department: Process Engineering

Author(s): Daniel Choroser

Checked by: William Hix

Issue status: Approved

Approved by: Robert Hanson

Approver's position: Process EGS

Approver's signature: _____ Signature 6/22/2016 Date

River Protection Project
Waste Treatment Plant
2435 Stevens Center Place
Richland, WA 99354
United States of America
Tel: 509 371 2000

History Sheet

Rev	Reason for revision	Revised by
0	Initial release, issued to support notice of construction permit application for the Effluent Management Facility	Daniel Choroser

Contents

History Sheet ii

Acronyms vi

Executive Summary viii

1 Introduction 1-1

1.1 Purpose 1-1

1.2 Facility Function 1-1

1.3 Facility Location 1-2

1.4 Methodology 1-2

2 Regulatory Requirements and Guidance 2-1

3 Process Description 3-2

3.1 Effluent Management Facility Process Overview 3-2

3.2 Effluent Management Facility Ventilation Overview 3-2

3.3 Effluent Management Facility Emission Unit 3-3

3.4 Effluent Management Facility Emissions Estimate Results and Stream Descriptions 3-3

4 Particulate Material and Aerosols 4-1

4.1 Particulate and Aerosol Emissions from the Effluent Management Facility 4-1

4.2 Identification of Control Technologies 4-1

4.3 Elimination of Technically Infeasible Options 4-14

4.4 Ranking of Remaining Control Technologies 4-16

4.5 Evaluation of the Most Effective Control Technologies 4-16

4.6 Proposed Best Available Control Technology for Toxic Air Pollutants 4-17

5 Inorganic Gases 5-1

5.1 Emissions Estimate of Gaseous Inorganic Compounds from the Effluent Management Facility 5-1

5.2 Unabated Ammonia Emissions from the Effluent Management Facility 5-1

5.3 Unabated Dimethyl Mercury Emissions from the Effluent Management Facility 5-1

6 Volatile and Semivolatile Organic Compounds 6-1

6.1 Emissions Estimate of Volatile and Semivolatile Organic Compounds from the Effluent Management Facility 6-1

7 Best Available Control Technology for Toxic Air Pollutants Summary and Recommendations 7-2

7.1 Particulates and Aerosols 7-2

7.2 Toxic Inorganic Gases 7-2

7.3 Volatile Organic Compounds 7-2

8 References 8-1
8.1 Project References 8-1
8.2 Other References 8-1

Appendices

Appendix A ..... A-i

Tables

Table ES-1 Summary of the Effluent Management Facility Emission Unit viii
Table 3-1 Emission Units and Associated Stream Number 3-3
Table 3-2 Estimated Total Unabated Emissions 3-3
Table 4-1 Summary of Organic and Inorganic Particulate and Aerosol Emissions 4-1
Table 4-2 T-BACT Control Technology Screening for Control of Toxic Particulates and Aerosols 4-18
Table 4-3 T-BACT Technology Ranking by Effectiveness for Control of Toxic Particulates and Aerosols 4-20
Table 5-1 EMF Gaseous Inorganic TAP Emissions versus De Minimis Values 5-1
Table A-1 Inorganic COPCs Emissions Estimate from the Direct Feed LAW Effluent Management Facility Vessel Vent Process (DVP) System A-1
Table A-2 Organic COPCs Emissions Estimate from the Direct Feed LAW Effluent Management Facility Vessel Vent Process (DVP) System A-3
Table A-3 Effluent Management Facility Emissions Exceeding De Minimis Quantities A-18

Figures

Figure 1-1 Hanford Tank Waste Treatment and Immobilization Plant Location at the Hanford Site 1-4
Figure 1-2 Effluent Management Facility Location at the Hanford Tank Waste Treatment and Immobilization Plant Site 1-5
Figure 1-3 Best Available Control Technology for Toxic Air Pollutants Process Methodology 1-6
Figure 3-1 Process Schematic of the Effluent Management Facility 3-4
Figure 3-2 Effluent Management Facility Emissions Unit for T-BACT Analysis 3-2
Figure 4-1 Cyclone (Reverse-Flow Type) 4-21

Figure 4-2 **Baghouse Filter** **4-22**
Figure 4-3 **High-Efficiency Metal Fiber Filter** **4-23**
Figure 4-4 **High-Efficiency Particulate Air Filters** **4-24**
Figure 4-5 **Packed-Bed / Packed-Tower Scrubber** **4-25**
Figure 4-6 **Spray-Chamber / Spray-Tower Scrubber** **4-26**
Figure 4-7 **Submerged Bed Scrubber** **4-27**
Figure 4-8 **Direct Feed LAW Effluent Management Facility Vessel Vent Process System Exhaust** **4-28**

Acronyms

ACV	Active Confinement Ventilation System
BACT	best available control technology
BARCT	best available radionuclide control technology
COPC	constituent of potential concern
DEP	Direct Feed LAW Effluent Management Facility Process System
DFLAW	Direct Feed Low-Activity Waste
DOE	US Department of Energy
DST	double-shell tank
DVP	Direct Feed LAW Effluent Management Facility Vessel Vent Process System
Ecology	Washington State Department of Ecology
EMF	Effluent Management Facility
EPA	US Environmental Protection Agency
ESP	electrostatic precipitator
HEME	high-efficiency mist eliminator
HEMF	high-efficiency metal fiber (filter)
HEPA	high-efficiency particulate air (filter)
HLW	High-Level Waste (Facility)
HSS	hydrosonic scrubber
Lab	Analytical Laboratory
LAER	lowest achievable emissions rate
LAW	Low-Activity Waste (Facility)
LVP	LAW secondary offgas/vessel vent process system
PM	particulate matter
PT	Pretreatment (Facility)
RACT	reasonably achievable control technology
SBS	submerged bed scrubber
SVOC	semivolatile organic compound
TAP	toxic air pollutant
T-BACT	best available control technology for toxic air pollutants
TLP	treated LAW evaporation process system
TPY	US tons per year

ULPA	ultra-low penetration air (filter)
VOC	volatile organic compound
WAC	Washington Administrative Code
WESP	wet electrostatic precipitator
WTP	Hanford Tank Waste Treatment and Immobilization Plant

Executive Summary

This best available control technology for toxic air pollutants (T-BACT) demonstration report documents the five-step process performed for recommending emission control technologies for the mitigation of emissions of toxic material from the new emission unit at the Hanford Tank Waste Treatment and Immobilization Plant (WTP) Effluent Management Facility (EMF). The EMF is being constructed to support the processing and recycling of effluents during Direct Feed Low-Activity Waste (DFLAW) operations. Performance of the five basic steps of the US Environmental Protection Agency's and the Washington State Department of Ecology's "top-down" T-BACT process are described in the following paragraphs.

The first step was to determine the magnitude of toxic air emissions from the EMF. The unabated offgas stream constituents used in the T-BACT analysis are based on calculation 24590-BOF-M4C-DEP-00001, *DFLAW Effluent Management Facility Air Emissions Estimate,* which provides estimated emission rates for 408 organic, inorganic, and radionuclide constituents of potential concern from the EMF. The offgas stream from EMF process was defined and evaluated as unabated emission sources from the EMF. Table ES-1 summarizes the emission unit addressed in this report. A summary table of predicted unabated emissions of toxic particulates and aerosols, toxic inorganic gases, volatile organic compounds (VOC), and semivolatile organic compounds (SVOC) is provided in Table 3-2. Across the board, the unabated EMF offgas toxics emissions are minimal compared to offgas streams from the Low-Activity Waste (LAW), High-Level Waste (HLW), and Pretreatment (PT) facilities. This statement applies to each of the three types of toxics emissions addressed in this report: (1) toxic particulates and aerosols, (2) toxic inorganic gases, and (3) VOC/SVOCs.

Table ES-1 Summary of the Effluent Management Facility Emission Unit

Facility	Emission Unit (point source)	Stream Number	Description
EMF	EM-1	DEP15	Process vessel ventilation and DEP evaporator extraction exhaust

DEP = Direct Feed LAW Effluent Management Facility Process System

The second step was to identify all potentially applicable control technologies. A search for commercially available toxic air emission control technologies was performed. References are provided in Section 8. The available control technologies applicable to toxic particulates and aerosols are described in Section 4 and include separators, electrostatic precipitators, filters, mist eliminators, and scrubbers. Toxic inorganic gases are discussed in Section 5, and VOC/SVOCs are discussed in Section 6. For each control technology, the average removal efficiency for applicable constituents was determined from referenced sources.

The third step was to eliminate technically infeasible options. Screening criteria were applied to eliminate any control technology that was not available (i.e., cannot be obtained commercially) or not applicable (i.e., unable to be reasonably installed and operated for control of the EMF emissions). The screening process was used to develop a short list of control technologies for further T-BACT analysis.

The fourth step was to rank the remaining control technologies in order of effectiveness for the pollutant under review.

The fifth step was to evaluate the environmental, energy, and economic impacts. In this analysis, the control technology with the highest control efficiency was evaluated first. If this technology was found to have no adverse energy, environmental, or economic impacts, it was then proposed as T-BACT and no further analysis was necessary. If the top technology was shown to have unacceptable impacts, the next most effective control technology in the list was then similarly evaluated until a technology was determined to be appropriate for being proposed as T-BACT.

Calculation 24590-BOF-M4C-DEP-00001 identified three groups of toxic air emissions from the EMF. These three groups were (1) toxic particulates and aerosols, (2) toxic inorganic gases, and (3) VOC/SVOCs. The proposed T-BACT for toxic particulate and aerosol emissions is the use of dual-stage high-efficiency particulate air (HEPA) filters, with a predicted removal efficiency of 99.9995%. The environmental, energy, and economic analyses for HEPA filtration resulted in no unacceptable impacts. The cost of HEPA filtration for control of toxic particulates and aerosols is offset by the required treatment of radionuclide particulates with the same HEPA filters.

Toxic inorganic gases and VOC/SVOCs were predicted to be emitted from the EMF in extremely low amounts. It was determined that in order to remove these pollutants with best available technologies, the cost per ton to remove these pollutants would exceed the ceiling cost-effectiveness threshold previously set by the Washington State Department of Ecology and the US Environmental Protection Agency. Therefore, due to the extremely low emissions rates and prohibitive cost per ton to remove these pollutants, no T-BACT is proposed for removal of toxic inorganic gases or VOC/SVOC emissions from the EMF.

1 Introduction

This best available control technology for toxic air pollutants (T-BACT) demonstration report details the process used to select the emission control technologies for the mitigation of toxic air pollutant (TAP) emissions from the Hanford Tank Waste Treatment and Immobilization Plant (WTP) Effluent Management Facility (EMF). The WTP is located at the US Department of Energy (DOE) Hanford Site near Richland, Washington.

Note: This T-BACT report is specific to the EMF; it is an addendum to the existing T-BACT analysis for the other WTP facilities (24590-WTP-RPT-ENV-01-005, *Best Available Control Technology Analysis for Toxic Air Pollutants for the WTP*). The conclusions reached in the existing T-BACT analysis for the other WTP facilities remain unchanged.

The following subsections provide a brief description of the purpose of the EMF, its proposed location, and the expected operating lifetime of the facility. In addition, the introduction includes the objectives, the purpose, and a summary of the analysis procedure used for preparing the T-BACT report, using the procedures in the US Environmental Protection Agency's (EPA) TD8831N481990, *EPA New Source Review Workshop Manual, Prevention of Significant Deterioration and Nonattainment Area Permitting* (EPA 1990).

1.1 Purpose

This document provides information on TAP emissions, the proposed control technologies, why certain technologies were proposed, or why they were not feasible for mitigation of toxic emissions from the EMF. The information presented demonstrates that the emission control equipment proposed for the EMF complies with Washington State regulations concerning T-BACT, as defined in Washington Administrative Code (WAC) 173-460, *Control for New Sources of Toxic Air Pollutants*. Information in this document will be used to support the notice of construction permit application for the EMF at WTP.

The EMF will handle waste streams that contain radioactive and toxic constituents of potential concern (COPC). To address the radioactive constituents, a best available radioactive control technology (BARCT) analysis was performed in parallel with the T-BACT analysis and is documented in a separate report (24590-WTP-RPT-ENV-15-004, *Best Available Radionuclide Control Technology Analysis Addendum for the WTP Effluent Management Facility*).

1.2 Facility Function

The purpose of the WTP is to convert high-level radioactive mixed liquid waste to a solid vitrified form (borosilicate glass) for final disposal. Underground storage tanks located at the Hanford Site are single- and double-shelled tanks (DST) managed by the DOE Office of River Protection. The tank contents will be transferred to the WTP. The WTP will have a nominal lifetime of approximately 40 years, and is designed to produce a maximum of 30 metric tons of immobilized low-activity waste and 7.5 metric tons of immobilized high-level waste per day (refer to DOE Contract DE-AC27-01RV14136 [WTP Contract] [DOE 2000], Section C).

To facilitate the processing of tank waste into glass at the earliest possible date, the EMF is being constructed to support the operation scenario of directly feeding to the Low-Activity Waste (LAW)

Facility (referred to as the "Direct Feed LAW" operating scenario). In this scenario, the LAW Facility and Analytical Laboratory (Lab) will be commissioned to operate while the Pretreatment (PT) and High-Level Waste (HLW) facilities are completed. The purpose of the EMF is to process secondary waste streams associated with the LAW melter offgas (i.e., submerged bed scrubber [SBS] condensate, wet electrostatic precipitator [WESP] drains, and caustic scrubber effluent) and line flushes/drains during Direct Feed LAW operation. An evaporator is used to concentrate the secondary waste streams from the LAW melter offgas and recycle back to the LAW Facility to incorporate into the glass. The EMF will have a nominal lifetime of approximately 40 years, and is designed to work in concert with the LAW Facility and Lab.

1.3 Facility Location

The WTP is located near the center of the DOE Hanford Site, which covers approximately 560 square miles of semi-arid land in southeastern Washington State. The site is located northwest of Richland, Washington. The WTP is being built at the eastern end of the 200 East Area of the Hanford Site, near the former Grout Treatment Facility, 241-AP Tank Farms Complex, and Plutonium/Uranium Extraction Plant (PUREX). The EMF (buildings 25, 26, and 27) is to be added within the WTP site. Figure 1-1 shows the WTP location within the Hanford Site, and Figure 1-2 shows the EMF location within the WTP site.

1.4 Methodology

The five basic steps of EPA's and the Washington State Department of Ecology's (Ecology) "top-down" T-BACT process for evaluation of air toxics emission control technologies are presented in the following subsections, along with a brief description of each step. A flowchart showing the T-BACT process methodology used during the development of this report is provided in Figure 1-3.

1.4.1 Step 1, Define Facility Process Variables

The first step in the top-down T-BACT analysis is to describe the facility's physical and chemical processes, including estimated emissions of each organic and inorganic COPC. The unabated offgas stream constituents used in this T-BACT analysis are based on calculation 24590-BOF-M4C-DEP-00001, *DFLAW Effluent Management Facility Air Emissions Estimate*, which provides estimated emission rates for 408 organic, inorganic, and radionuclide COPCs from the EMF. Appendix A includes the emissions estimates for constituents applicable to this T-BACT demonstration.

1.4.2 Step 2, Identify Available Control Technologies

The second step in the top-down T-BACT analysis is to identify commercially available toxic air emission control options. This step involves a search for available technologies that can reduce the emission levels for the toxic contaminants of concern selected in step 1. Technologies required under previously completed lowest achievable emission rate (LAER) determinations are available for T-BACT purposes and are also included as control alternatives. They usually represent the "top" alternative because they represent the highest emission reduction.

The informational sources used to identify control technologies include the following:

- The US Environmental Protection Agency's (EPA) reasonably available control technology (RACT) / best available control technology (BACT) / LAER Clearinghouse reviews
- Previous T-BACT demonstrations

- Regulatory authorities
- Federal, state, and local new source review permits
- Control technology vendors
- Literature searches
- Internet searches
- Similar commercial and government applications

1.4.3 Step 3, Determine Technical Feasibility

The third step of the top-down T-BACT methodology is to determine the technical feasibility of the control technologies. This process eliminates options that are technically infeasible. The determination of feasibility is based on evaluating vendor specifications and commercial or government application experience data for available control technologies identified in step 2. Control options determined to be technically infeasible will be eliminated from further consideration in the T-BACT analysis.

1.4.4 Step 4, Rank Feasible Technologies by Removal Efficiency

In the fourth step, the remaining control alternatives that were not eliminated are ranked in order of effectiveness for the pollutant under review, either gases or particulate matter (PM) and aerosols. The most effective control technology is ranked at the top.

1.4.5 Step 5, Evaluate the Environmental, Energy, and Economic Impacts

The fifth step, evaluating the most effective controls, begins with the most effective control option. The option is analyzed with respect to the following three factors (at minimum):

- Energy impacts
- Environmental impacts (includes significant or unusual impacts on other media, water, or solid waste)
- Economic impacts (cost and operational effectiveness)

For this analysis, the energy benefits or penalties are determined based on the energy cost per ton of pollutant removed. Determination of adverse environmental impact is based on waste generation (e.g., hazardous waste), water pollution, emission of unregulated pollutants, and health and safety impact to workers and the general public. Economic impacts are based on average and incremental cost effectiveness, expressed as cost per ton of pollutant removed. Other factors can include adverse or beneficial impacts on other process operations, including other control technologies.

In this analysis, the control technology with the highest control efficiency is evaluated first. If this technology is found to have acceptable energy, environmental, or economic impacts, it is then proposed as T-BACT and no further analysis is necessary. If the top technology is shown to be inappropriate, based on energy, environmental, or economic impacts, the applicant must fully document the justification for this conclusion. Then the next most effective control technology in the list becomes the new candidate and is similarly evaluated. This process continues until the technology under consideration cannot be eliminated due to energy, environmental, or economic impacts, which would demonstrate the technology to be appropriate as T-BACT.

Figure 1-1 Hanford Tank Waste Treatment and Immobilization Plant Location at the Hanford Site

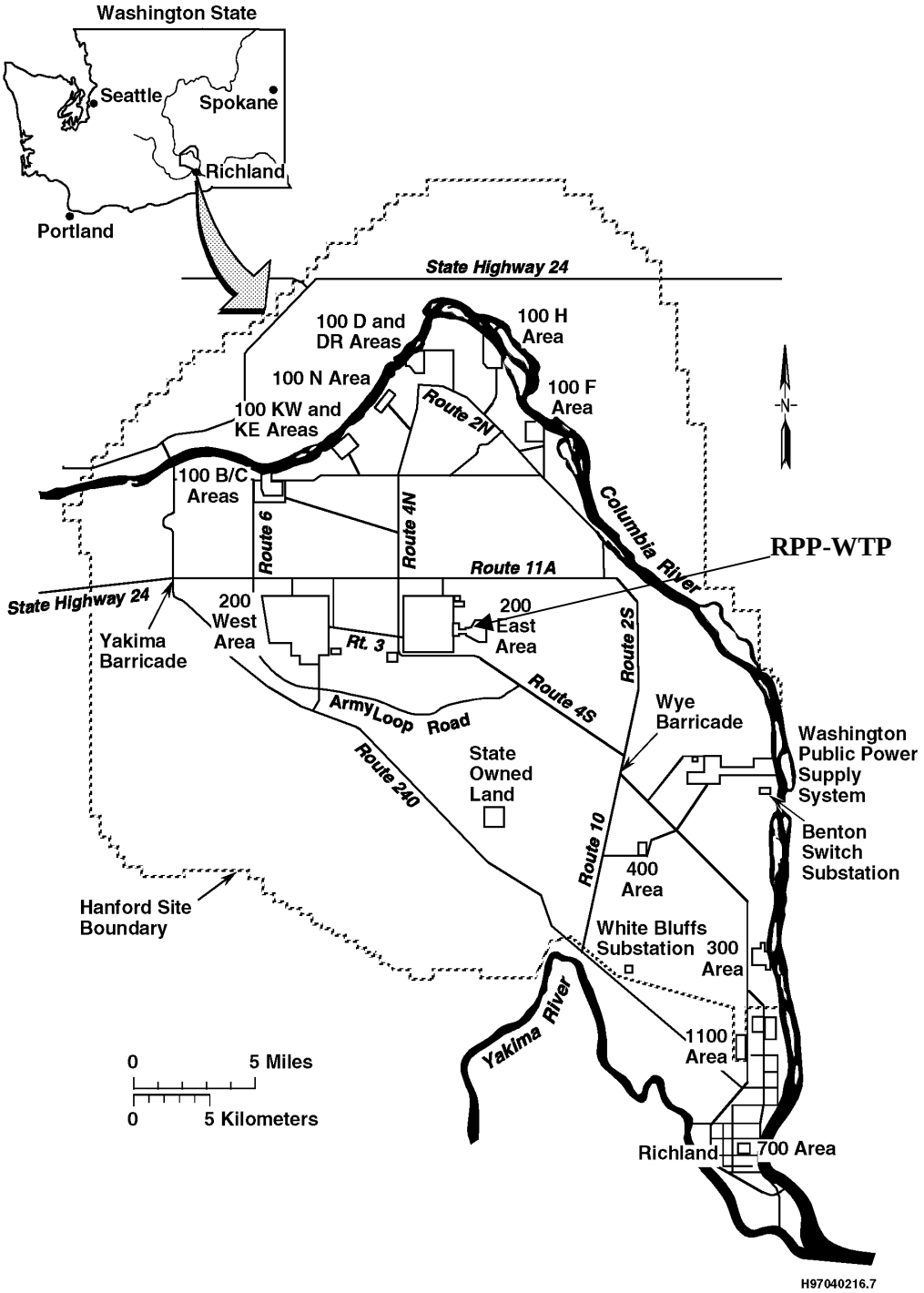

Figure 1-2 Effluent Management Facility Location at the Hanford Tank Waste Treatment and Immobilization Plant Site

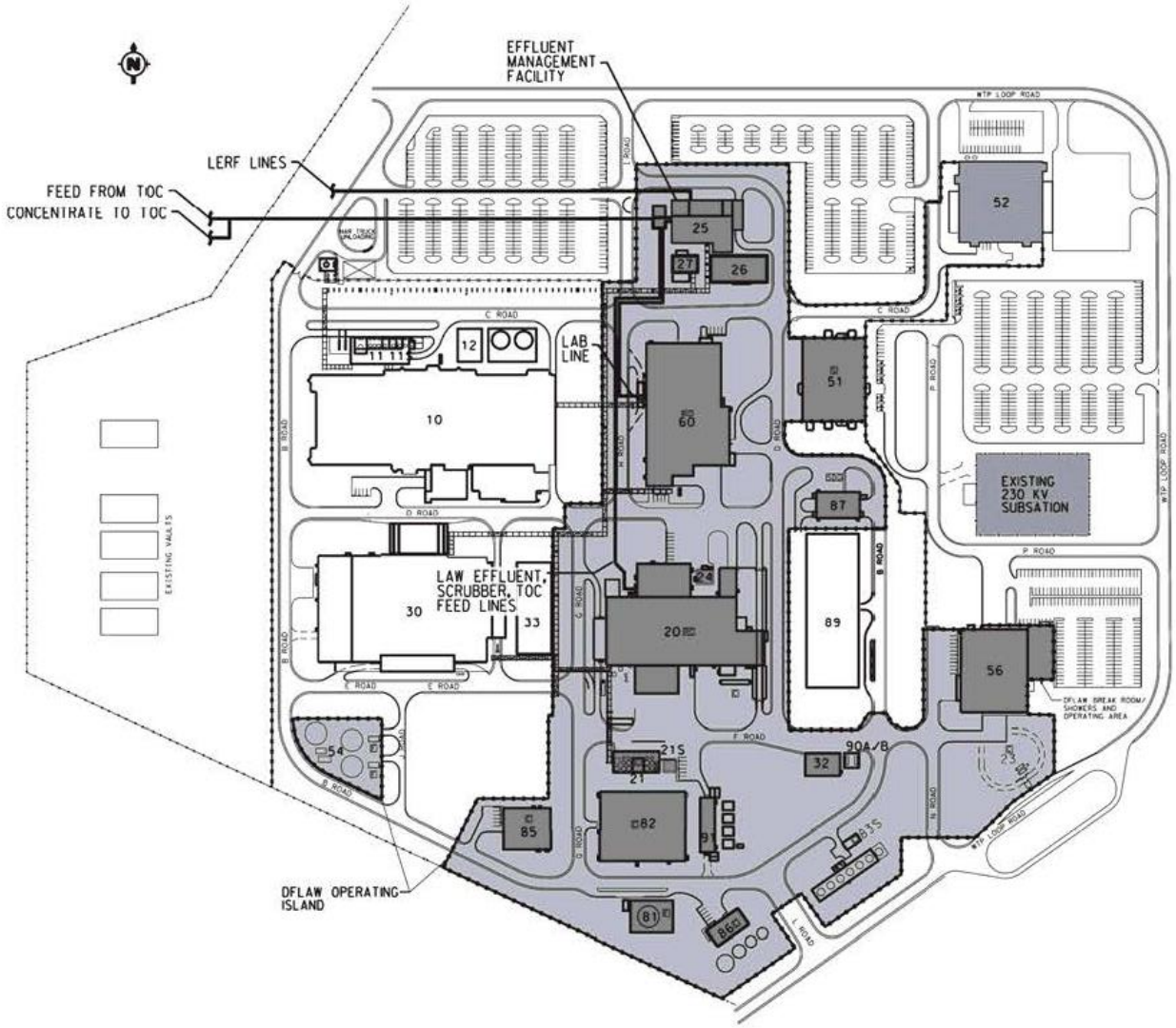

(**Source:** 24590-LAW-PDACP-NS-15-0002, *DF LAW Update for LAW and Addition of the Effluent Management Facility and Transfer Lines*)

Figure 1-3 Best Available Control Technology for Toxic Air Pollutants Process Methodology

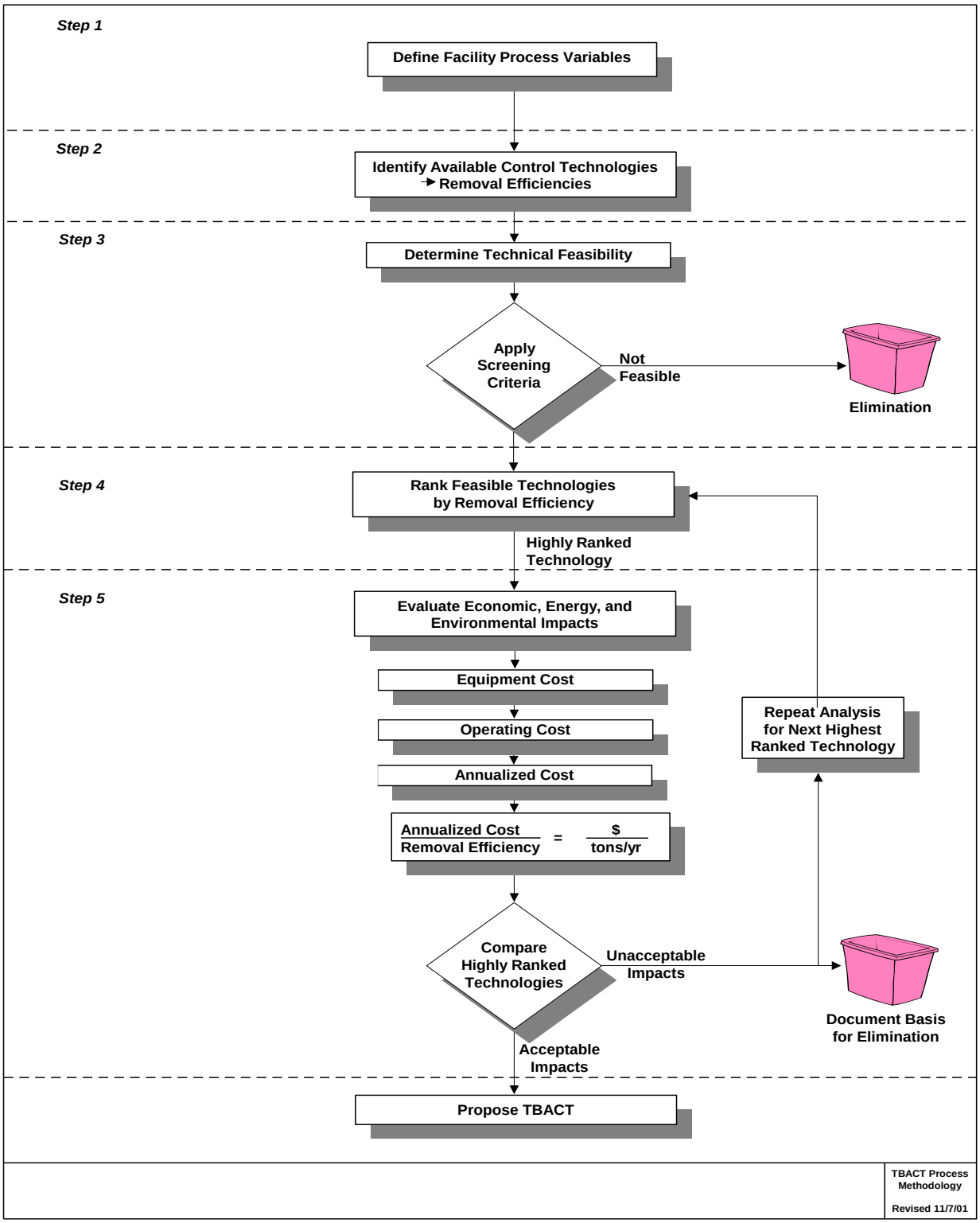

2 Regulatory Requirements and Guidance

This section reviews the regulatory requirements and guidance pertaining to toxic air emissions that may apply to the EMF at WTP.

In Washington State, Ecology is responsible for establishing air quality standards to protect the public health and the environment, according to RCW 70.94, *Washington Clean Air Act*. In addition, Ecology has the authority to regulate toxic air emissions in Washington State through the promulgation of WAC 173-460.

The TAP new source review requirements supplement the new source review requirements codified at WAC 173-400-110, *General Regulations for Air Pollution Sources – New Source Review (NSR) for Sources and Portable Sources*. Ecology requires new sources that emit TAPs to apply for a notice of construction approval (WAC 173-460-040). Ecology also requires that T-BACT be used whenever a source of TAP emissions is established (WAC 173-460-040(3)(a)). Because the EMF is a new source of TAP emissions, a T-BACT demonstration is required. This analysis is intended to satisfy the requirement to propose T-BACT for EMF emission sources that may emit TAPs.

3 Process Description

3.1 Effluent Management Facility Process Overview

Offgas generated by the LAW vitrification processes will be treated in independent offgas treatment systems (refer to 24590-WTP-RPT-ENV-01-005). The function of the EMF is to treat radioactive, dangerous liquid effluent derived from secondary waste streams resulting from treatment of the LAW melter offgas streams. These secondary waste streams include SBS condensate, caustic scrubber effluent, WESP drains, flushing/draining of transfer lines to and from Tank Farms, and decontamination of miscellaneous equipment involved with operations related to the direct transfer of Hanford tank waste to the LAW Facility. In addition, liquid wastes will be generated by the Lab in order to support Direct Feed LAW operations. Compatible Lab wastes may be transferred to the EMF until the High-Level Waste Facility or the PT Facility begins hot commissioning.

The effluents from LAW and Lab operations will be collected in the EMF. The EMF will blend together the effluent streams, with the exception of the caustic scrubber effluent from the LAW secondary offgas/vessel vent process system (LVP). The EMF will concentrate the blended effluent in an evaporator to reduce the total volume to be returned to either the LAW Facility or Tank Farms. Due to the fact that caustic scrubber effluent will, by design, contain virtually no radionuclides or toxics, this stream will be combined with the evaporator condensate and sent to the 200 Area Liquid Effluent Retention Facility / Effluent Treatment Facility.

The Direct Feed LAW Effluent Management Facility Process System (DEP) concentrates the liquid effluent from LAW and Lab via evaporation. Some salt species are volatile in the LAW melter and are not fully captured in the glass. Recycling those volatile salt species captured by the SBS or WESP will cause buildup in the recycle loop until steady-state conditions are achieved. Note that this approach is consistent with the baseline design which recycled LAW effluents to the treated LAW evaporation process system (TLP) evaporator in the PT Facility. The DEP evaporator condensate and LVP caustic scrubber effluent are blended and transferred to the Liquid Effluent Retention Facility / Effluent Treatment Facility after qualification.

The EMF process consists of two interfacing systems: the DEP system and the Direct Feed LAW Effluent Management Facility Vessel Vent Process System (DVP). The DEP system consists of the main processing equipment in the EMF, including the liquid storage vessels, the DEP evaporator unit, and related transfer pumps. The DVP system comprises the ventilation system that evacuates the headspaces from within the DEP process vessels and also vents minute quantities of noncondensables from the DEP evaporator aftercondenser vent. These emissions combine into a single process stream, numbered DEP15, before being treated. Stream DEP18 represents the treated process vessel ventilation and evaporator noncondensables (treated DEP15), which is subsequently exhausted to the EMF stack. Refer to Figure 3-1 for a simplified flow diagram of the EMF process.

3.2 Effluent Management Facility Ventilation Overview

The ventilation system that serves the EMF is referred to as the Active Confinement Ventilation System (ACV). The ACV system uses the cascade principle with the direction of airflow from areas of low or no contamination to areas of higher potential contamination. Conditioned air supplied to the EMF cascades through the area of potential contamination and exits via the ACV exhaust system's filtered

exhaust. The vessels, piping, and vessel ventilation act as the primary confinement, while the ACV system provides secondary confinement for the EMF. No TAPs are expected to be in the ACV system.

3.3 Effluent Management Facility Emission Unit

The EMF has a single emission unit: EM-1. Emission unit EM-1 is the combination of the ACV exhaust and the DVP system exhaust. The ACV system does not emit toxic particulates, aerosols, gases, or volatile organic compounds (VOC) / semivolatile organic compounds (SVOC); therefore, the system is not addressed in this T-BACT demonstration. Only toxic emission contributions originating from the DVP system exhaust are assessed in this T-BACT demonstration. Figure 3-2 depicts the emission unit addressed in this T-BACT demonstration.

3.4 Effluent Management Facility Emissions Estimate Results and Stream Descriptions

Table 3-2 provides a summary of the estimated total unabated toxic emissions from the EMF. More detailed information on emission estimates can be found in Appendix A, Table A-1 and Table A-2 or calculation 24590-BOF-M4C-DEP-00001.

Stream DEP15 is the stream containing unabated airborne effluents from the DVP system exhaust. This stream has a relatively low volumetric and mass flow. This stream will contain, in relatively minute amounts, PM and aerosols, inorganic gases, and VOC/SVOCs. Figure 3-2 provides a graphic representation of emission stream from the EMF and associated EMF emission units. Figure 3-1 shows the overall EMF process and associated emission sources. The stream numbers provided in the figures are consistent with the process streams numbers presented in calculation 24590-BOF-M4C-DEP-00001. Table 3-1 provides the crosswalk between the stream number, emission source, and the emission unit.

Table 3-1 Emission Units and Associated Stream Number

Facility	Emissions Unit	Stream Number	Description
EMF	EM-1	DEP15	DVP system exhaust - EMF vessel ventilation and evaporator extraction exhaust (unabated)

Table 3-2 Estimated Total Unabated Emissions

Unabated Offgas Stream		Total Particulates/Aerosols (Inorganic + Organic)	Inorganic Gases	Organic Gases (VOCs & SVOCs)
DEP15	**g/sec**	3.43×10^{-3}	1.01×10^{-1}	2.33×10^{-3}
	lb/yr	238	7022	162

Figure 3-1 Process Schematic of the Effluent Management Facility

Note: Streams labeled "vent header" combine in a single header that feeds to the proposed T-BACT before release.

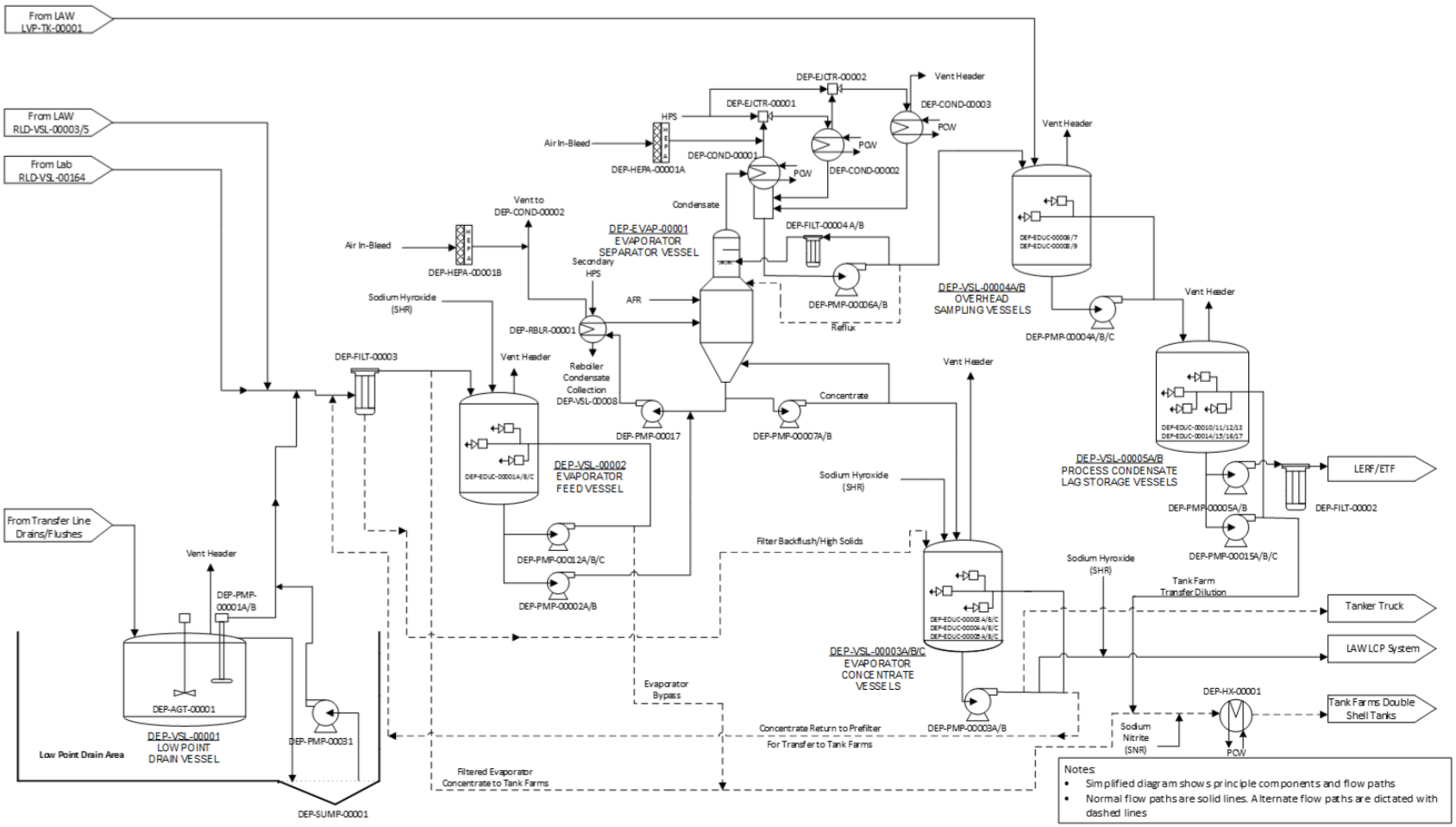

Figure 3-2 Effluent Management Facility Emissions Unit for T-BACT Analysis

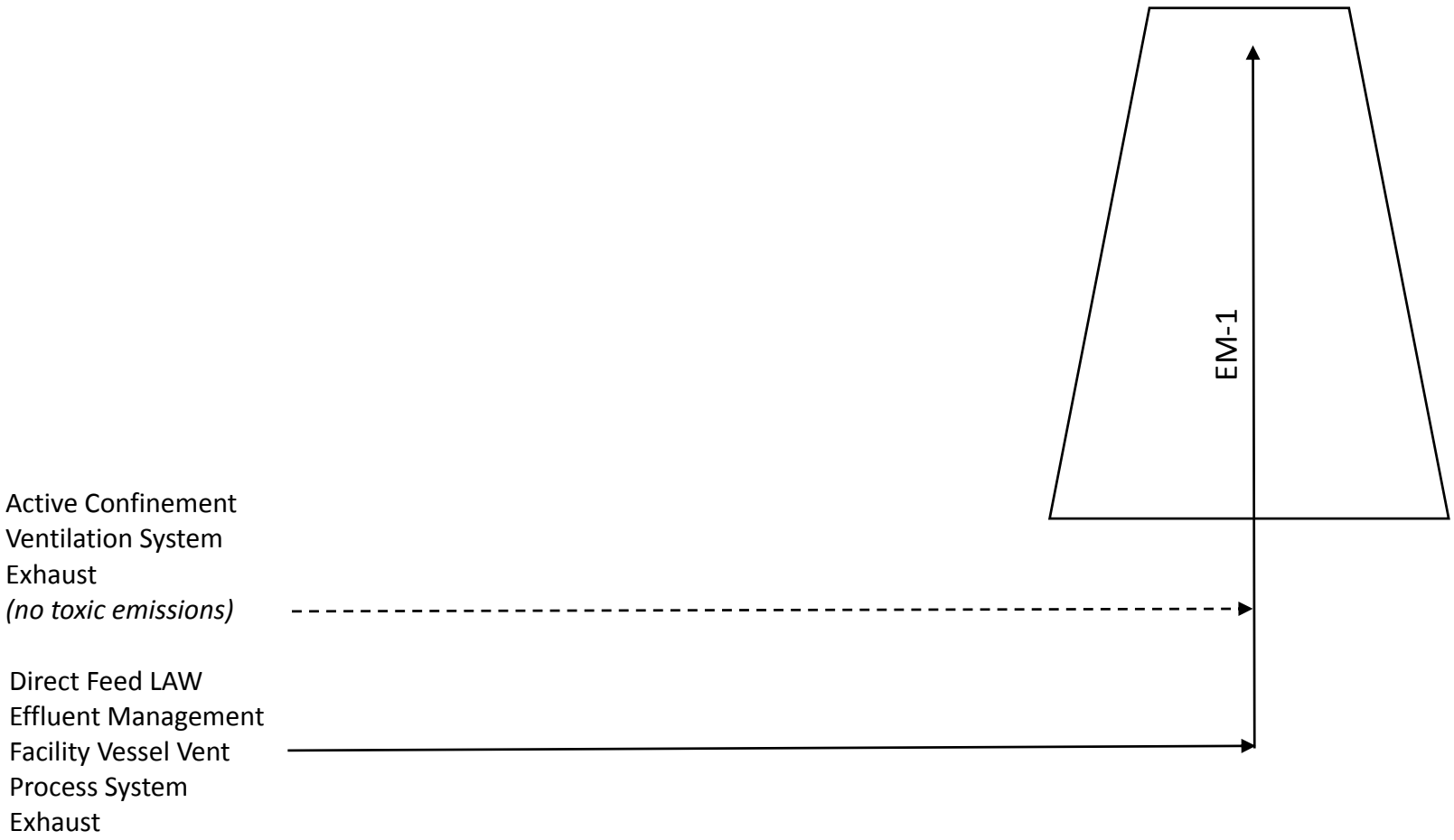

4 Particulate Material and Aerosols

4.1 Particulate and Aerosol Emissions from the Effluent Management Facility

The first step of the T-BACT process is to define the facility process variables. The unabated offgas stream constituents used in the T-BACT analysis are based on values from calculation 24590-BOF-M4C-DEP-00001. Appendix A provides the emissions estimates of all unabated offgas stream COPCs used in this T-BACT analysis. The EMF emissions estimate has identified PM and aerosols of both inorganic (primarily metallic) and organic types, summarized below in Table 4-1.

Table 4-1 Summary of Organic and Inorganic Particulate and Aerosol Emissions

Emissions Type	Unabated Emissions Rate	
	g/sec	lb/yr
Total Inorganic Particulates and Aerosols	3.43×10^{-3}	238
Total Organic Particulates and Aerosols	1.32×10^{-7}	9.18×10^{-3}
Total Particulates and Aerosols	**3.43×10^{-3}**	**238**

4.2 Identification of Control Technologies

Information regarding available control technologies for particulates and aerosols is provided in this section. Information was obtained from the following sources:

- EPA RACT/BACT/LAER Clearinghouse reviews
- Previous T-BACT demonstrations
- Regulatory authorities
- Literature searches
- Information from technology vendors
- Research and development reports
- Similar commercial and government applications (West Valley Demonstration Project, Savannah River Defense Waste Processing Facility, and Oak Ridge Toxic Substances Control Act Incinerator)

Available control options are those air pollution control technologies which have a practical potential for application to the process emissions and which are available from a vendor. Control technologies include not only equipment to remove or treat releases, they also include measures to prevent or reduce emissions. This section discusses the literature search that was performed and provides a description of each technology available for the control of particulates and aerosols.

4.2.1 RACT/BACT/LAER Clearinghouse Review and Literature Search

Section 8 contains a list of references, including those from a RACT/BACT/LAER Clearinghouse review and literature search performed for technologies pertaining to the control of particulate and aerosol emissions. Information was also gathered from Internet searches of DOE and EPA websites. Resources used from these databases include publications from DOE national laboratories and EPA programs, and proceedings of DOE nuclear air cleaning conferences. Existing references from previous Hanford

T-BACT analyses were also used. Additional information was obtained from publicly available documents from existing nuclear facilities in the United States and other countries.

4.2.2 Descriptions of the Control Technologies for Particulates and Aerosols

The following subsections describe the major types of equipment for control of particulate and aerosol emissions. The control technologies are categorized as separators, electrostatic precipitators (ESP), filters, mist eliminators, and scrubbers.

4.2.2.1 Separators

Cyclones and Multicyclones

Cyclones use inertia to remove particles from the gas stream. The cyclone imparts centrifugal force on the gas stream, usually within a conical-shaped chamber. Cyclones operate by creating a double vortex inside the cyclone body. The incoming gas is forced into a circular motion down the cyclone near the inner surface of the cyclone tube. At the bottom of the cyclone, the gas turns and spirals up through the center of the tube and out of the top of the cyclone. Particles in the gas stream are forced toward the cyclone walls by the centrifugal force of the spinning gas but are opposed by the fluid drag force of the gas traveling through and out of the cyclone. For large particles, inertial momentum overcomes the fluid drag force so that the particles reach the cyclone walls and are collected. For small particles, the fluid drag force overwhelms the inertial momentum and causes these particles to leave the cyclone with the exiting gas. Gravity also causes the larger particles that reach the cyclone walls to travel down into a bottom hopper. Although they rely on the same separation mechanism as momentum separators, cyclones are more effective because they have a more complex gas flow pattern. Refer to Figure 4-1 for an illustration of a cyclone.

Cyclones are generally classified into four types, which depend on how the gas stream is introduced into the device and how the collected dust is discharged. The four types include (1) tangential inlet with axial discharge, (2) axial inlet with axial discharge, (3) tangential inlet with peripheral discharge, and (4) axial inlet with peripheral discharge. The first two types are the most common.

Pressure drop is an important parameter because it relates directly to operating costs and control efficiency. Higher control efficiencies for a given cyclone can be obtained by higher inlet velocities, but this also increases the pressure drop. In general, 60 ft/sec is considered the best operating velocity. Common ranges of pressure drops for cyclones are 0.07 to 0.14 psi for low-efficiency units (high throughput), 0.14 to 0.2 psi for medium-efficiency units (conventional), and 0.3 to 0.36 psi for high-efficiency units.

When high-efficiency (which requires small cyclone diameter) and large throughput are both desired, a number of cyclones can be operated in parallel. In a multiple tube cyclone, the housing contains a large number of tubes that have a common gas inlet and outlet in the chamber. The gas enters the tubes through axial inlet vanes, which impart a circular motion.

Cyclones are used to control particulates—primarily particulates greater than 10 µm in aerodynamic diameter. However, there are high-efficiency cyclones designed to be effective for particulates less than or equal to 10 µm and less than or equal to 2.5 µm in aerodynamic diameter (PM_{10} and $PM_{2.5}$). Although cyclones may be used to collect particles larger than 200 µm, gravity settling chambers or simple momentum separators are usually satisfactory and less subject to abrasion.

The collection efficiency of cyclones varies as a function of particle size and cyclone design. Cyclone efficiency generally increases with particle size and (or)density, inlet duct velocity, cyclone body length, number of gas revolutions in the cyclone, ratio of cyclone body diameter to gas exit diameter, dust loading, and smoothness of the cyclone inner wall. Cyclone efficiency will decrease with increases in gas viscosity, body diameter, gas exit diameter, gas inlet duct area, and gas density. A common factor contributing to decreased control efficiencies in cyclones is air leakage into the dust outlet.

Control efficiency ranges for single cyclones are often based on three classifications of cyclone: (1) conventional, (2) high-efficiency, and (3) high-throughput. The control efficiency range for conventional single cyclones is estimated to be 30 to 90% for PM_{10} and 0 to 40% for $PM_{2.5}$.

High-efficiency single cyclones are designed to achieve higher control of smaller particles than conventional cyclones. High-efficiency single cyclones can remove 5 µm particles at up to 90% efficiency, with higher efficiencies achievable for larger particles. The control efficiency ranges for high-efficiency single cyclones are 60 to 95% for PM_{10} and 20 to 70% for $PM_{2.5}$. High-efficiency cyclones come with higher pressure drops, which require higher energy costs to move the waste gas through the cyclone. Cyclone design is generally driven by a specified pressure-drop limitation, rather than by meeting a specified control efficiency.

High-throughput cyclones are only guaranteed to remove particles greater than 20 µm, although collection of smaller particles does occur to some extent. The control efficiency ranges for high-throughput cyclones are 10 to 40% for PM_{10} and 0 to 10% for $PM_{2.5}$. Multicyclones are reported to achieve from 80 to 95% collection efficiency for 5 µm particles.

Typical gas flow rates for a single cyclone unit are 18 to 420 scf/sec. Flows at the high end of this range and higher (up to approximately 1800 scf/sec) use multiple cyclones in parallel. There are single cyclone units employed for specialized applications which have flow rates of up to approximately 1060 scf/sec and as low as 0.02 scf/sec. Inlet gas temperatures are only limited by the materials of construction of the cyclone, and cyclones have been operated at temperatures as high as 1000°F. Waste gas pollutant loadings typically range from 1×10^{-4} to 0.01 lb/scf. For specialized applications, loadings can be as high as 1 lb/scf and as low as 6×10^{-5} lb/scf. Cyclones perform more efficiently with higher pollutant loadings, provided that the device does not become choked. Higher pollutant loadings are generally associated with higher flow designs.

A multiple cyclone separator consists of a number of small-diameter cyclones operating in parallel to each other and having a common gas inlet and outlet. The flow pattern differs from that of a conventional cyclone; the gas enters at the top of the collecting tube and has a swirling action imparted to it by a stationary vane positioned in its path. The diameters of the collecting tubes are typically 9 to 12 in. Removal efficiencies range from 80 to 95% for 5 µm particles. These cyclones are useful for high gas flows, have simple designs, and low initial costs. High-humidity gases can cause condensation and agglomeration/plugging. (Refer to EPA-452/F-03-005, *Air Pollution Control Technology Fact Sheet – Cyclones* [EPA 2003a].)

4.2.2.2 Electrostatic Precipitators

Electrostatic precipitators (ESPs) are particulate control devices that use electrical forces to move particles entrained within an exhaust stream onto collection surfaces. The entrained particles are given an electrical charge when they pass through a corona, a region where gaseous ions flow. Electrodes in the

center of the flow lane are maintained at a high voltage and generate the electrical field that forces the particles to the collector walls. The separated particles are then removed for treatment or disposal.

Dry Electrostatic Precipitator

In a wire-pipe ESP, also called a tubular ESP, the exhaust gas flows vertically through conductive tubes, generally with many tubes operating in parallel. The tubes may be formed as a circular, square, or hexagonal honeycomb. Square and hexagonal pipes can be packed closer together than cylindrical pipes, reducing wasted space. Pipes are generally 3 to 12 in. in diameter and 3 to 12 ft in length. The high voltage electrodes are long wires or rigid "masts" suspended from a frame in the upper part of the ESP that run through the axis of each tube. Both an upper and lower frame support rigid electrodes. In modern designs, sharp points are added to the electrodes to provide additional ionization sites either at the entrance to a tube or along the entire length in the form of stars.

In the wire-plate ESP, the exhaust gas flows horizontally and parallel to vertical plates of sheet metal. Plate spacing is typically between 9 to 18 in. The high-voltage electrodes are weighted, long wires that hang between the plates. Some later designs use rigid electrodes (hollow pipes approximately 1 to 1.6 in. in diameter) in place of wire. Within each flow path, gas flow must pass each wire in sequence as it flows through the unit. The flow areas between the plates are called ducts. Duct heights are typically 20 to 45 ft.

In dry ESPs, the collectors are knocked, or "rapped," by various mechanical means to dislodge the particulates, which slide downward into a hopper where they are collected. Some newer dry wire-pipe ESPs are cleaned acoustically with sonic horns. The horns, typically cast-metal horn bells, are usually powered by compressed air, and a vibrating metal plate that periodically interrupts the airflow introduces acoustic vibration. As with a rapping system, the collected particulates slide downward into the hopper. The hopper is evacuated periodically as it becomes full. Dust is removed through a valve into a dust-handling system, such as a pneumatic conveyor, and is then disposed of in an appropriate manner.

Typical new equipment design efficiencies are between 99 and 99.9% for PM_{10} and $PM_{2.5}$. Older existing equipment has a range of actual operating efficiencies of 90 to 99.9%. Although several factors determine ESP collection efficiency, ESP size is most important. Size determines treatment time; the longer a particle spends in the ESP, the greater its chance of being collected. Maximizing electric field strength will maximize ESP collection efficiency. Collection efficiency is also affected by dust resistivity, gas temperature, chemical composition (of the dust and the gas), and particle size distribution. Typical gas flow rates for dry wire-pipe ESPs are 17 to 1700 scf/sec. Dry wire-pipe ESPs can operate at very high temperatures, up to 1300°F (705°C). Operating gas temperature and chemical composition of the dust are key factors influencing dust resistivity and must be carefully considered in the design of an ESP. Typical inlet concentrations to a wire-pipe ESP are 6×10^{-5} to 6×10^{-4} lb/scf. It is common to pretreat a waste stream, usually with a wet spray or scrubber, to bring the stream temperature and pollutant loading into a manageable range. Highly toxic flows with concentrations well below 6×10^{-5} lb/scf are sometimes controlled with ESPs.

In general, dry ESPs operate most efficiently with dust resistivities between 2×10^{3} and 8×10^{9} ohm-in. In general, the most difficult particles to collect are those with aerodynamic diameters between 0.1 and 1.0 μm. Particles between 0.2 and 0.4 μm usually show the most penetration. This is most likely a result of the transition region between field and diffusion charging.

When much of the pollutant loading consists of relatively large particles, mechanical collectors such as cyclones or spray coolers may be used to reduce the load on the ESP, especially at high inlet

concentrations. Gas conditioning equipment to improve ESP performance by changing dust resistivity is occasionally used as part of the original design, but more frequently it is used to upgrade existing ESPs. The equipment injects an agent into the gas stream ahead of the ESP. Usually, the agent mixes with the particles and alters their resistivity to promote higher migration velocity, and thus higher collection efficiency. (Refer to EPA-452/F-03-027, *Air Pollution Control Technology Fact Sheet – Dry Electrostatic Precipitator (ESP) – Wire-Pipe Type* [EPA 2003b]; and EPA-452/F-03-028, *Air Pollution Control Technology Fact Sheet – Dry Electrostatic Precipitator (ESP) – Wire-Plate Type* [EPA 2003c].)

Wet Electrostatic Precipitator

Wet electrostatic precipitators (WESPs) function similarly to dry ESPs, with the exception that WESPs use a continuous or intermittent washwater stream to remove the collected particles, rather than a mechanical or acoustic agitation system. This washwater particle removal system does not re-entrain particles, as the mechanical or acoustic agitation systems tend to do in the dry ESPs. WESPs are very effective at removing aerosols and particles with very high resistivities. As with dry ESPs, typical new equipment design efficiencies for WESPs are between 99 and 99.9% for PM_{10} and $PM_{2.5}$. Typical gas flow rates for wire-pipe WESPs are 17 to 1700 scf/sec. Typical gas flow rates for wire-plate WESPs are 1700 to 8300 scf/sec. Most small plate-type WESPs (1700 to 3500 scf/sec) use flat plates instead of wires for the high-voltage electrodes. Both wire-pipe and wire-plate WESPs are limited to operating at temperatures lower than approximately 170 to 190°F (75 to 90°C). Typical inlet concentrations to a wire-pipe WESP are 6×10^{-5} to 6×10^{-4} lb/scf. Typical inlet concentrations to a wire-plate WESP are 1×10^{-4} to 7×10^{-3} lb/scf. It is common to pretreat a waste stream, usually with a wet spray or scrubber, to bring the stream temperature and pollutant loading into a manageable range. Highly toxic flows with concentrations well below 6×10^{-5} lb/scf are also sometimes controlled with ESPs. Dust resistivity is not a factor for WESPs because of the high humidity atmosphere, which lowers the resistivity of most materials. Particle size is much less of a factor for WESPs compared to dry ESPs. Due to the lack of resistivity concerns and the reduced re-entrainment, WESPs can efficiently collect much smaller particles. When the pollutant loading is exceptionally high or consists of relatively large particles (larger than 2 μm), venturi scrubbers or spray chambers may be used to reduce the load on the WESP. Much larger particles (larger than 10 μm) are controlled with mechanical collectors such as cyclones. Gas conditioning equipment to reduce both inlet concentration and gas temperature is occasionally used as part of the original design of a WESP. (Refer to EPA-452/F-03-029, *Air Pollution Control Technology Fact Sheet – Wet Electrostatic Precipitator (ESP) – Wire-Pipe Type* [EPA 2003d]; and EPA-452/F-03-030, *Air Pollution Control Technology Fact Sheet – Wet Electrostatic Precipitator (ESP) – Wire-Plate Type* [EPA 2003e].)

4.2.2.3 Filters

Baghouse (Fabric) Filters

In a fabric filter, a particulate loaded gas stream is passed through a tightly woven or felted fabric, causing PM in the flue gas to be collected on the fabric by sieving and other mechanisms. Fabric filters may be in the form of sheets, cartridges, or bags, with a number of the individual fabric filter units housed together in a group. Bags are the most common type of fabric filter. Bags may be 20 ft to 30 ft long and 5 inches to 12 inches in diameter. See Figure 4-2 for an illustration of bag house filters.

Baghouse filters are separated into two groups, standard and custom, which are further separated into low, medium, and high capacity. Standard baghouse filters are factory-built, off-the-shelf units. They may handle up to 1800 scf/sec. Custom baghouse filters are designed for specific applications and are built to

the specifications prescribed by the customer. These units are generally much larger than standard units (i.e., from 1800 to more than 18,000 scf/sec).

Gas temperatures up to about 500°F (260°C), with surges to about 550°F (290°C), typically can be accommodated with the appropriate fabric material. Some fabrics (e.g., polyolefins, nylons, acrylics, and polyesters) are useful only at relatively low temperatures of 200 to 300°F (95 to 150°C). For high-temperature flue gas streams, more thermally stable fabrics (e.g., fiberglass, Teflon, or Nomex) must be used. Spray coolers or dilution air can be used to lower the temperature of the pollutant stream. This prevents the temperature limits of the fabric from being exceeded. Lowering the temperature, however, increases the humidity of the pollutant stream. Therefore, the minimum temperature of the pollutant stream must remain above the dewpoint of any condensable in the stream. The baghouse and associated ductwork should be insulated and possibly heated if condensation may occur.

Typical inlet concentrations to baghouses are 6×10^{-5} to 1×10^{-3} lb/scf; but in extreme cases, inlet conditions may vary between 6×10^{-6} to more than 1×10^{-2} lb/scf. Moisture and corrosives content are the major gas stream characteristics requiring design consideration. Standard fabric filters can be used in pressure and vacuum service, but only within the range of about +/−25 in. of water column. Well-designed and operated baghouses have been shown to be capable of reducing overall particulate emissions to less than 3×10^{-6} lb/scf, and in a number of cases, to as low as 1×10^{-7} to 7×10^{-7} lb/scf. Typical new equipment design efficiencies are between 99 and 99.9%. (Refer to EPA-452/F-03-024, *Air Pollution Control Technology Fact Sheet – Fabric Filter – Mechanical Shaker Cleaned Type* [EPA 2003f]).

<u>Prefilters (Roughing Filters)</u>

Prefilters can be classified as either low-efficiency (Group I), moderate-efficiency (Group II), or high-efficiency (Group III) filters. Group I panel filters are shallow, tray-like assemblies of coarse fibers or crimped metal mesh enclosed in a steel or cardboard casing and have a 10 to 35% efficiency. Group II and III filters are extended media, dry-type units. The medium is pleated or formed as bags to increase the surface area. Group II filters are effective in removing 5+ μm particles, while Group III filters can filter even smaller particles. Filter media can be chosen to minimize damage from corrosion. Prefilters have a high dust-loading capacity, but they can create relatively high pressure drops and the spent filters must be handled as solid waste. Group II filters are rated for 20 to 80% removal efficiency, and Group III filters are rated for 85 to 95% removal efficiency. (Refer to DOE-HDBK-1169-2003, *Nuclear Air Cleaning Handbook*, 4th Edition [DOE 2003], Section 3.4; and 24590-WTP-M6-50-00002, *P&ID Symbols and Legend Sheet 2 of 8*).

<u>High-Efficiency Metal Fiber Filters</u>

High-efficiency metal fiber (HEMF) filters are composed of stainless steel fibers sintered together into a mat, giving the filter a high loading capacity, high strength, and a low pressure drop. Removal efficiencies of up to 99.97% can be achieved for particles greater than 0.3 μm. HEMF filters can tolerate high temperatures and wet conditions, though their removal efficiency can be quite low when wet. In addition, free liquids with dissolved acid gases negatively affect the metal-type filters. The filters can be welded into steel housings or frames, eliminating the need for gaskets and adhesives. Although only recently used in low flow rate streams in the nuclear industry, HEMF filters have been commercially available for about 14 years. These filters can be cleaned in place or removed and cleaned. The duration between cleanings depends on the particle loading and the number of filters used. Figure 4-3 provides an illustration of a HEMF filter. (Refer to CCN 020413, *HEMF Filter Evaluation*; and NUREG/CP-0130, CONF-9020823,

Vol. 2, *Proceedings of the 22nd DOE/NRC Nuclear Air Cleaning Conference: Sessions 9-16*, Session 10, Filters and Filter Performance [DOE 1993].)

High-Efficiency Particulate Air and Ultra-Low Penetration Air Filters

High-efficiency particulate air (HEPA) and ultra-low penetration air (ULPA) filters consist of fine fibers or a series of pleated or folded strips. Materials vary, but generally these are made of synthetic fibrous materials. The principle of this type of filtration is not to restrict the passage of particulates by the gap between fibers, but to alter the airflow streamlines. The airflow will slip around the fiber, but any higher-density aerosols or PM will not change direction as rapidly, and as a result of their inertia (velocity), will tend to impact the fiber. Once attached, most particulates will not be re-entrained in the air stream. Figure 4-4 provides an illustration of a HEPA filter.

HEPA and ULPA filters are classified by their minimum collection efficiency. Many international standards and classes currently exist for high-efficiency filters. In general, HEPA and ULPA filters are defined as having the following minimum efficiency ratings for a single stage:

HEPA	99.97% efficiency (based on in-place testing) for the removal of 0.3 μm diameter or larger particulates
ULPA	99.9995% efficiency for the removal of 0.12 μm diameter or larger particulates.

Dual stage HEPA filters provide 99.9995% collection efficiency. The first HEPA filter is credited for a decontamination factor of 2000, and the second a decontamination factor of 100. Dual-stage HEPA filters, as opposed to single-stage HEPA, are to be considered as one of the control technologies for this T-BACT analysis. Dual-stage HEPA filters are used ubiquitously throughout the WTP for control of airborne particulate and aerosol emissions. (Refer to 24590-WTP-RPT-ENV-01-005.)

Some extended media filters are capable of much higher efficiencies. Commercially available filters can control particulates with 0.01 μm diameter at efficiencies of 99.99+% and particulates with 0.1 μm diameter at efficiencies of 99.9999+%. Several factors determine HEPA and ULPA filter collection efficiency. These include gas filtration velocity, particle characteristics, and filter media characteristics. In general, the collection efficiency increases with increasing velocity and particle size. In addition, the collection efficiency increases as the dust cake thickness and density increases on the filter.

HEPA and ULPA filters are currently limited to low capacity airflow applications. Standard filter packs are factory-built, off-the-shelf units. They may handle from less than 4 up to 35 standard cubic ft per second. HEPA filtration systems designed for nuclear applications require higher capacities. For these applications, filter banks, or modules are ducted together in parallel to increase airflow capacity. Commercially available modular systems can accommodate airflow rates up to 670 scf/sec.

Airflow capacity is a function of the resistance, or pressure drop across the filter and particle loading. As the dust cake forms on the filter, the resistance increases, and therefore the airflow rate decreases. Because the filter is not cleaned, the airflow rate continues to decrease as the system operates. After the pressure drop across the filter reaches a point that prevents adequate airflow, the filter must be replaced and disposed. For these reasons, HEPA and ULPA filters are used in applications that have low airflow rates or have low concentrations of particulates.

Temperatures are limited by the type of filter media and sealant used in the filter packs. Standard cartridges can accommodate gas temperatures up to about 200°F (95°C). With the appropriate construction materials, commercial HEPA filters can accept temperatures of up to 400°F (205°C). HEPA filters with ceramic or glass packing mechanical seals can accept temperatures up to 1000°F (540°C).

Spray coolers or dilution air can be used to lower the temperature of the pollutant stream. This prevents the temperature limits of the filter from being exceeded. However, lowering the temperature increases the humidity of the pollutant stream. HEPA and ULPA filters can tolerate some humidity. However, humidity higher than 95% can cause the filter media to plug, resulting in failure. Therefore, the minimum temperature of the pollutant stream must remain above the dewpoint of any condensable in the stream. The filter and associated ductwork should be insulated and possibly heated if condensation may occur.

Typical pollutant loading ranges from 6×10^{-5} to 2×10^{-3} lb/scf. Dust holding capacity compares the weight gain of the filter to the rise in pressure drop during a specific period of time (airflow volume). Typical inlet dust holding capacities range from 1 to 2 lb per 1000 scfm. HEPA and ULPA filters are best used in applications that have low concentrations of particulates or prohibit cleaning of the filter. ULPA filters require more frequent replacement than HEPA filters, due to the former's tendency to load more quickly. Moisture and corrosives content are the major gas stream characteristics requiring design consideration. As discussed previously, humidity up to 95% is acceptable with the proper filter media, coatings, and filter construction. Filters are available that can accommodate corrosive gas streams with concentrations up to several percent. These filters are constructed of special materials and are generally more expensive. (Refer to EPA-452/F-03-023, *Air Pollution Control Technology Fact Sheet – Fabric Filter – HEPA and ULPA Type* [EPA 2003g].)

Safe-change HEPA filter housings are designed and installed to facilitate changing filters while maintaining emissions and worker exposure to "as low as reasonably achievable" levels. Safe-change is a term used by WTP to describe a process to change HEPA filters, also known as a bag-in, bag-out filter change method. The process involves removing a spent filter into a plastic bag that has been secured to a filter housing access opening. The spent filter is moved to the bottom of the bag and the bag is cut to remove the spent filter for disposal. A new filter is installed using a similar process where a new filter is placed inside a new bag. This bag is placed over the same housing opening and the remnant of the first bag. Upon completing installation of the new filter, a bag remains in place (behind the filter housing door) to support the next filter change task. (Refer to 24590-WTP-RPT-ENV-01-005.)

<u>Deep-Bed Sand and Glass Fiber Filters</u>

Filters employed for removing small amounts of particles from large volumes of gas may be classified into two types: thin-bed and deep-bed. Thin-bed filters are units employing media such as paper, wool felt, and thin glass mats. Deep-bed filters, on the other hand, involve packings of granular or fibrous materials that are up to 9 ft deep. In this service, the total aerosol concentration is usually on the order of or less-than-normal atmospheric dust concentrations. Deep-bed aerosol filters have been used for many years in nuclear reprocessing industry. When an aerosol is passed through a packing, the suspended particles are caused to deposit on the surface of the packing by one of a number of mechanisms, which include interception based on size and inertia, diffusional migration, gravity settling, electrostatic attraction, and migration due to thermal gradient. In sand filters, which normally operate at superficial velocities approximately 5 ft/min and employ granules graded from as large as 3.5-inch diameter down to 50 mesh, the deposition mechanisms are primarily those of diffusion and gravity settling. Collection efficiency increases appreciably as superficial velocity is reduced. With fibrous filters, interception (both direct and inertial) may be a controlling factor, depending on the fiber sizes. Filters with fibers larger than

100 μm in diameter normally operate at superficial velocities in excess of 30 ft/min and generally show improved collection efficiency as the velocity is increased. Beds of fine fibers are usually operated at velocities of 5 to 50 ft/min and show a reduction of efficiency as velocity is increased. The factors that must be considered in the design of a deep-bed filter are collection efficiency or penetration, pressure drop, filter size and life, and available packing media. Removal efficiencies for sand filters up to 99.98% for aerosols have been reported under test conditions. Those for fiber filters are 91.5% (3 μm) to 99.999% (0.5 μm). Deep-bed sand filters tend to have higher pressure drops, lower removal efficiencies, require significantly more space than glass-bed fiber filters, and may present a remediation concern at their end of life. (Refer to 24590-WTP-RPT-ENV-01-005; and DOE-HDBK-1169-2003 [DOE 2003].)

4.2.2.4 Mist Eliminators

Mist eliminators consist of a packed fiber bed between two concentric screens or two flat parallel screens. Mist eliminators can also consist of baffled or zigzag blade modules, tailored for either vertical or horizontal flow installations. High-efficiency mist eliminators (HEME) claim removal efficiencies up to 99% for liquid particles as small as 1 μm, with specialized designs capable of removing submicron liquid particles. Features of mist eliminators include high collection efficiency, low installed cost, low pressure drop, and ready availability (off-the-shelf item). Mist eliminators are available in a variety of materials—including metal alloys, plastics, and fiber-reinforced plastic for the housing; and glass, ceramic, polypropylene, polytrafluoroethylene, and polyester for the packing or mesh pad. (Refer to Bulletin MELLC-02, Rev 3, *Mist Elimination Liquid-Liquid Coalescing* [Koch-Glitsch 2015]; and *Mist Eliminators* [Vanaire].)

4.2.2.5 Scrubbers

<u>Venturi Scrubber</u>

A venturi scrubber accelerates the waste gas stream to atomize the scrubbing liquid and to improve gas-liquid contact. In a venturi scrubber, a “throat” section is built into the duct that forces the gas stream to accelerate as the duct narrows and then expands. As the gas enters the venturi throat, gas velocity and turbulence increase. Depending upon the scrubber design, the scrubbing liquid is sprayed into the gas stream before the gas encounters the venturi throat, or into the throat, or upwards against the gas flow in the throat. The scrubbing liquid is then atomized into small droplets by the turbulence in the throat, and droplet-particle interaction is increased. Some designs use supplemental hydraulically or pneumatically atomized sprays to augment droplet creation. The disadvantage of these designs is that clean liquid feed is required to avoid clogging. After the throat section, the mixture decelerates, and further impacts occur, causing the droplets to agglomerate. When the particles have been captured by the liquid, the wetted particulates and excess liquid droplets are separated from the gas stream by an entrainment section, which usually consists of a cyclonic separator and (or) a mist eliminator. Current designs for venturi scrubbers generally use the vertical downflow of gas through the venturi throat and incorporate three features: (1) a “wet-approach” or “flooded-wall” entry section to avoid a dust buildup at a wet-dry junction; (2) an adjustable throat for the venturi throat to provide for adjustment of the gas velocity and the pressure drop; and (3) a “flooded” elbow located below the venturi and ahead of the entrainment separator to reduce wear by abrasive particles. The venturi throat is sometimes fitted with a refractory lining to resist abrasion by dust particles.

Venturi scrubbers are primarily used to control PM_{10}. Venturi scrubber collection efficiencies for particulates range from 70 to greater than 99%, depending upon the application. Collection efficiencies are generally higher for particulates with aerodynamic diameters of approximately 0.5 to 5 μm. Some

venturi scrubbers are designed with an adjustable throat to control the velocity of the gas stream and the pressure drop. Increasing the venturi scrubber efficiency requires increasing the pressure drop, which in turn increases the energy consumption.

Venturi scrubbers have been applied to control particulate emissions from utility, industrial, commercial, and institutional boilers fired with coal, oil, wood, and liquid waste. They have also been applied to control emission sources in the chemical, mineral products, wood, pulp and paper, rock products, and asphalt manufacturing industries; lead, aluminum, iron and steel, and gray iron production industries; and municipal solid waste incinerators. Typically, venturi scrubbers are applied where it is necessary to obtain high collection efficiencies for fine particulates. Thus, they are applicable to controlling emission sources with high concentrations of submicron particulates. Typical gas flow rates for a single-throat venturi scrubber unit are 8 to 1700 scf/sec. Flows higher than this use either multiple venturi scrubbers in parallel or a multiple throated venturi. Inlet gas temperatures are usually in the range of 40 to 750°F (4 to 400°C). Waste gas pollutant loadings can range from 6×10^{-5} to 7×10^{-3} lb/scf. In situations where waste gas contains both particulates and gases, venturi scrubbers are sometimes used as a pretreatment device to remove particulates. This is to prevent clogging of a downstream device, such as a packed bed scrubber, which is designed to collect primarily gaseous pollutants. (Refer to EPA-452/F-03-017, *Air Pollution Control Technology Fact Sheet – Venturi Scrubber* [EPA 2003h].)

Hydrosonic Atomized Scrubbers (Air and Steam)

An air and steam atomized scrubber is a wet scrubbing system in which the energy for treating and pumping the offgas is provided by the flow of compressed air or steam from a supersonic ejector nozzle. The offgas stream is drawn into the device by the ejector nozzle, which is fitted with a water injector ring. The air or steam jet causes a violent shattering of the water droplets and subsequent turbulent mixing of the gas and water in a converging section of piping. By this means, extremely fine particulates are captured on the droplets. The gas then flows through a mixing tube where the droplets agglomerate. Separation of the cleaned gas from the entrained liquid is accomplished in a low-pressure cyclone, with liquid removed by gravity at the bottom. The removal efficiencies are approximately 99% for 0.1 to 10 μm particulates. Removal efficiencies can be limited by re-entrainment or stripping from the reservoir solution. Liquid is recirculated by a high-pressure pump with an attached filter required to prevent particles from blocking the nozzle. There are no moving parts to the scrubber, which can be used in series for higher removal efficiencies. Pressure drop across the scrubber is approximately 9 in. of water column. The scrubbers require periodic maintenance, and a high solids concentration in the water or scrubbing solution can cause plugging. The scrubbers are reliable and effective and have been extensively used in commercial applications and also at Savannah River's Defense Waste Processing Facility. (Refer to 24590-WTP-RPT-ENV-01-005; RPT-W375-EN00007, *Best Available Radionuclide Control Technology for the RPP-WTP*; and WHC-MR-0398, *Hanford Waste Vitrification Plant Technical Background Document for Toxics Best Available Control Technology Demonstration* [Westinghouse 1992].)

Impingement-Plate / Tray-Tower Scrubbers

An impingement-plate scrubber is a vertical chamber with plates mounted horizontally inside a hollow shell. Impingement-plate scrubbers operate as countercurrent PM collection devices. The scrubbing liquid flows down the tower while the gas stream flows upward. Contact between the liquid and the

particle-laden gas occurs on the plates. The plates are equipped with openings that allow the gas to pass through. Some plates are perforated or slotted, while more complex plates have valve-like openings.

The simplest impingement-plate scrubber is the sieve plate, which has round perforations. In this type of scrubber, the scrubbing liquid flows over the plates and the gas flows up through the holes. The gas velocity prevents the liquid from flowing down through the perforations. Gas-liquid-particle contact is achieved within the froth generated by the gas passing through the liquid layer. Complex plates, such as bubble cap or baffle plates, introduce an additional means of collecting particulates. The bubble caps and baffles placed above the plate perforations force the gas to turn before escaping the layer of liquid. While the gas turns to avoid the obstacles, most particulates cannot and are collected by impaction on the caps or baffles. Bubble caps and the like also prevent liquid from flowing down the perforations if the gas flow is reduced.

In all types of impingement-plate scrubbers, the scrubbing liquid flows across each plate and down the inside of the tower onto the plate below. After the bottom plate, the liquid and collected particulates flow out of the bottom of the tower. Impingement-plate scrubbers are usually designed to provide operator access to each tray, making them relatively easy to clean and maintain. Consequently, impingement-plate scrubbers are more suitable for PM collection than packed-bed scrubbers. Particles larger than 1 µm in aerodynamic diameter can be collected effectively by impingement-plate scrubbers, but many particles smaller than 1 µm in aerodynamic diameter will penetrate these devices.

Water is the most common solvent used to remove inorganic contaminants, though a caustic is used for acid-gas absorption. Removal efficiencies for particulates range from 50 to 99%. Typical gas flow rates for a single impingement-plate scrubber unit are 17 to 1250 scf/sec. Inlet gas temperature is limited to 40 to 700°F (4 to 370°C) for PM control. For gaseous pollutant control, the gas temperature ranges between 40 to 100°F (4 to 38°C). In general, the higher the gas temperature, the lower the absorption rate, and vice-versa. Higher temperatures can lead to loss of scrubbing liquid or solvent through evaporation. Impingement-plate scrubbers are easy to clean and maintain and are not subject to fouling, as packed-bed wet scrubbers are; hence, they are more suited to PM control, and there are no practical limits to inlet particulate concentrations. These scrubbers require a constant load and there is a high potential for corrosion problems. Short residence times will lower scrubber efficiency for small particles. Collection efficiencies for small particles (smaller than 1 µm in aerodynamic diameter) are low for these scrubbers; hence, they are not recommended for fine particulate control. (Refer to EPA-452/F-03-012, *Air Pollution Control Technology Fact Sheet – Impingement-Plate/Tray-Tower Scrubber* [EPA 2003i].)

<u>Mechanically Aided Scrubbers</u>

Mechanical scrubbers are devices in which a power-driven rotor produces the fine spray and the contacting of gas and liquid. As in other types of scrubbers, the droplets are the principal collecting bodies for the dust particles. The rotor acts as a turbulence producer. An entrainment separator must be used to prevent carry-over of spray. The simplest commercial devices of this type are essentially fans upon which water is sprayed. Mechanically aided scrubber collection efficiencies range from 80 to 99% for particles down to 1 µm, depending upon the application. This type of scrubber relies almost exclusively on inertial interception for particulate collection, and is capable of high collection efficiencies, but only with commensurate high energy consumption.

Typical gas flow rates for a mechanically-aided scrubber units are 17 to 850 scf/sec. In general, mechanically-aided scrubbers can operate at temperatures up to approximately 300°F (150°C). Mechanically aided scrubbers can accept waste flows with particulate loadings up to 3×10^{-4} lb/scf;

however, higher loadings are possible with precleaning. Dust buildup on rotors can lead to imbalances, and there are typically higher maintenance requirements for these scrubbers. Mechanically aided scrubbers are usually preceded by a cyclone or other precleaner to remove coarse dust and larger debris. (Refer to EPA-452/F-03-013, *Air Pollution Control Technology Fact Sheet – Mechanically-Aided Scrubber* [EPA 2003j].)

Packed-Bed / Packed-Tower Scrubber

Packed-bed scrubbers consist of vertical towers filled with packing material. The packing material provides a large surface area for the offgas to contact the scrubbing solution. The scrubbing solution (typically water, caustic, or lime slurry) trickles down from the top of the tower through the packing, while the offgas moves countercurrently. Figure 4-5 provides an illustration of a packed-bed / packed-tower scrubber.

Moving-bed scrubbers and ionizing wet scrubbers are two subsets of the packed-bed scrubber. Moving-bed scrubbers incorporate a zone of movable packing where the gas and liquid can intimately mix. This type of scrubber uses packing consisting of low-density polyethylene or polypropylene spheres about 1.5 in. diameter, kept in continuous motion between the upper and lower retaining grids. This action keeps the spheres continually cleaned and considerably reduces the likelihood of bed plugging. Ionizing wet scrubbers use a high voltage to electrostatically charge particles in the gas stream. The particles then enter the packed scrubber section, where they are removed by attraction to neutral surfaces.

Although used primarily for acid gas control, removal efficiencies for PM as small as 2.5 µm range from 50 to 95% (refer to EPA-452/F-03-015, *Air Pollution Control Technology Fact Sheet – Packed-Bed/Packed-Tower Scrubber* [EPA 2003k]). The equipment can handle corrosive gases or aerosols and offers relatively low pressure drops and small space requirements. The process has high maintenance requirements, can be sensitive to temperature fluctuations, and is generally limited to gas streams with relatively low grain loadings. An ionizing wet scrubber has been used at the DOE Toxic Substances Control Act Incinerator in Oak Ridge to process uranium-contaminated hazardous organic wastes. (Refer to 24590-WTP-RPT-ENV-01-005.)

Spray-Chamber / Spray-Tower Scrubber

Spray scrubbers consist of empty cylindrical or rectangular chambers in which the gas stream is contacted with liquid droplets generated by spray nozzles. A common form is a spray tower, in which the gas flows upward through a bank or successive banks of spray nozzles. Similar arrangements are sometimes used in spray chambers with horizontal gas flow. Such devices have very low gas pressure drops, and all but a small part of the contacting power is derived from the liquid stream. The required contacting power is obtained from an appropriate combination of liquid pressure and flow rate. Physical absorption depends on properties of the gas stream and liquid solvent, such as density and viscosity, as well as specific characteristics of the pollutant(s) in the gas and the liquid stream (e.g., diffusivity, equilibrium solubility). These properties are temperature dependent, and lower temperatures generally favor absorption of gases by the solvent. Absorption is also enhanced by greater contacting surface, higher liquid-gas ratios, and higher concentrations in the gas stream. Chemical absorption may be limited by the rate of reaction, although the rate-limiting step is typically the physical absorption rate, not the chemical reaction rate. Figure 4-6 provides an illustration of a spray-chamber / spray-tower scrubber.

Spray tower scrubbers generally are not used for fine PM applications because high liquid-to-gas ratios (22.4 gal/1,000ft^3) are required. Overall, collection efficiencies range from 70 to greater than 99%,

depending upon the application. The most efficient spray towers typically employ cyclonic techniques to enhance removal efficiency.

Typical gas flow rates for spray tower wet scrubbers are 25 to 1700 scf/sec. In general, the higher the gas temperature, the lower the absorption rate, and vice-versa. Excessively high gas temperatures also can lead to significant solvent or scrubbing liquid loss through evaporation. For waste gases in which the particulates are to be controlled, the temperature range is generally 40 to 700°F (5 to 370°C), and for gas absorption applications, 40 to 100°F (5 to 40°C). Typical gaseous pollutant concentrations range from 250 to 10,000 ppmv. Spray tower wet scrubbers are not as prone to fouling as other wet scrubber designs, but very high liquid-to-gas ratios may be necessary to capture fine particulates. (Refer to EPA-452/F-03-016, *Air Pollution Control Technology Fact Sheet – Spray-Tower Scrubber* [EPA 2003l].)

Submerged Bed Scrubber

In an SBS, hot process offgas is passed through a bed of ceramic spheres or packing. A water spray with optional caustic injection floods the SBS to cool the offgas and scrub any particulates and acid gases present. The SBSs provide offgas cooling, condensation of steam and other condensables, removal of PM, and acid gas removal. The basic SBS equipment consists of a packed bed submerged in a process vessel containing scrubbing liquid. Gas to be cleaned enters at the bottom of the bed. Buoyancy drives liquid recirculation in concurrent flow with the gas as the system blowers pull the gas upward, with the gas exiting at the top of the scrubber. Condensate is continuously removed from the scrubber through an overflow line at the top of the liquid surface. The temperature of the scrubbing liquid is maintained by cooling coils located in the outer portion of the vessel and a cooling jacket. A large volume of cooled scrubbing solution acts as a heat sink so that the system can handle surges of hot offgas. Noncondensable material passes through. Captured aerosols are continuously removed from the system through an overflow line that also maintains the water level at a specified height. Figure 4-7 provides an illustration of an SBS.

Due to the internal circulation of the scrubbing liquid, no external pump or internal agitator is required. The scrubber tolerates variable operating conditions and has minimal maintenance requirements. There is a high pressure drop across the scrubber and the low circulation rate requires a large heat transfer surface area. The scrubbers are reliable and effective and have been extensively used in commercial applications and also at the West Valley Demonstration Project by West Valley Nuclear Services Company, Inc. Experiments performed on the behalf of DOE have shown that particulate removal efficiency can reach as high as 98% for particles in the range of 0.3 to 0.7 µm. (Refer to 24590-101-TSA-W000-0009-177-00001, *Final Report – Summary of DM1200 SBS History and Performance*; and PNL-6036, *Design Procedure for Sizing a Submerged-Bed Scrubber for Airborne Particulate Removal* [Battelle 1987]).

Cyclonic Wet Scrubbers

Cyclonic wet scrubbers work much like dry cyclones, with the exception that water is introduced into the cyclone. Particle-laden gas is introduced into the device where it is contacted by water sprays and the resulting droplets are impacted by centrifugal force onto the cyclone walls. The scrubbing liquid and the captured particles run down the walls and out the bottom of the scrubber. Particulate removal efficiencies reach as high as 95% for particles greater than 5 µm and from 60 to 75% for submicron particles.
The pressure drop across the scrubber ranges from 2 to 8 in. water column. Gas flow rates range from 25 to 1700 scf/sec and power input for a cyclonic scrubber is generally 1 to 3.5 hp per 1000 cfm. Cyclonic wet scrubbers can handle high temperatures and high moisture gases and require minimal maintenance. Drawbacks to using these scrubbers are high operating costs and production of a liquid waste stream.

These scrubbers are generally used as a precleaning device and for various process applications where high removal efficiencies are not required. (Refer to 24590-WTP-RPT-ENV-01-005; and EPA/452/B-02-001, *EPA Air Pollution Control Cost Manual* [EPA 2002].)

4.3 Elimination of Technically Infeasible Options

Step 3 of the T-BACT process is to determine the technical feasibility of control technology options and to eliminate infeasible technologies from further consideration.

4.3.1 Qualitative Criteria for Control Technology Screening

Qualitative screening and elimination criteria were developed for the selective elimination of control technologies evaluated to be technically infeasible or not applicable for treatment of EMF emissions. The screening criteria were applied for the suite of control technologies documented in the report.

The screening criteria were based on TD8831N481990 (EPA 1990). If a control technology has been installed and operated successfully on emissions with similar chemical and physical characteristics to those from EMF processes, it is demonstrated and is technically feasible. An undemonstrated technology is also determined to be feasible if it is "available" and "applicable." A technology is considered "available" if it can be obtained commercially. A technology is considered "applicable" if it can be reasonably installed and operated for control of EMF process emissions. A technology is considered technically infeasible if there are unresolvable technical difficulties in applying the control (e.g., size of the unit, location of the proposed site, and operating problems related to specific circumstances of the EMF process emissions).

The screening criteria developed for application to the suite of control technologies are as follows:

- The control technology has not been demonstrated at the appropriate scale (too small or too large) for application to the EMF process offgases.
- The control technology introduces additional hazards above and beyond the primary control hazard.
- The control technology uses materials of construction that are unsuitable in a radiation field anticipated during operations and where no suitable alternative materials can be substituted.
- The control technology would be very difficult to modify for applicable operations and maintenance activities anticipated during operations.
- The control technology requires testability requirements where extraordinary measures would be required to ensure operational performance.

4.3.2 Development of Technology Short List

Using the qualitative criteria for control technology screening described in Section 4.3.1, the list of potential control technologies for application to EMF emissions was evaluated. Table 4-1 shows the potential toxic particulate and aerosol control technologies considered and the screening results.
It includes whether each technology was determined to be applicable or not, and provides comments on why certain technologies were eliminated. Redundant technologies were eliminated. Only one of two control technologies that were essentially the same was retained as being applicable (e.g., spray-chamber / spray-tower wet scrubber was retained as being applicable, and spray tower scrubber was eliminated as being redundant).

The other primary reasons for elimination of technologies included not being proven at a scale applicable to the small flow requirements of the DVP system. The technologies eliminated due to unresolvable technical difficulties or poor compatibility with the scale of the EMF ventilation are described in the following paragraphs.

Baghouse (Fabric) Filters

Baghouse (fabric) filters were eliminated from further consideration. Baghouses consist of a large array of multiple filter bags necessary to provide sufficient control efficiency. These bags must be changed out frequently in order to maintain efficiency. Due to the small flow requirements of the DVP system, baghouse filters are eliminated.

High-Efficiency Metal Fiber Filter

HEMF filters were eliminated from further consideration. Disposal of a contaminated HEMF filter at the end of its usable life poses a challenge. Space requirements for disposal of spent HEMF filters is an issue especially when compared with traditional HEPA filters, which can be compacted upon disposal.

Ultra-Low Penetration Air Filters

ULPA filters were also eliminated from further consideration. These filters are primarily used for applications in the medical and electronic industries (i.e., clean rooms). They are used for offgas streams with very low particulate loadings, and they load up readily and require frequent replacement to maintain their efficiency. Excessive changeout requirements eliminate these filters from further consideration.

Deep-Bed Sand Filters

Deep-bed sand filters were eliminated from further consideration. Deep beds of sand can be used to provide particulate and aerosol control. Such beds are sized to accommodate the offgas flow and can be as large as a swimming pool. A separate large vault filled with filter media (sand and gravel) could be used. However, if any decrease in efficiency occurred due to channeling in the bed, the filter media would need to be changed out. The time to change out the large volume of filter media would greatly impact operations. End-of-life decommissioning of a vault containing large quantities of radioactively contaminated filter media would also present significant difficulties. Due to the small flow requirements of the DVP system, deep-bed sand filters are eliminated.

Impingement-Plate / Tray-Tower scrubbers and Mechanically Aided Scrubbers

Impingement-plate / tray-tower scrubbers and mechanically aided scrubbers were eliminated from further consideration. These scrubbers are not effective for removing submicron sized particles. In addition, mechanically aided scrubbers use a power-driven rotor to produce turbulence and increase contact between the offgas and the scrubbing solution. Moving parts wear and break down, requiring frequent maintenance to maintain their operational effectiveness; therefore, this control technology is not favorable compared to passive control technologies.

Table 4-2 provides a short list of control technologies for further T-BACT analysis. For control of particulates and aerosols, the following technologies were selected for further analysis: prefilter (roughing filter), HEMF filter, HEPA filter, deep-bed glass fiber filter, HEME, dry ESP, WESP, ejector venturi

scrubber, hydrosonic scrubber (HSS), packed-bed / packed-tower wet scrubber, spray-chamber / spray-tower wet scrubber, SBS, cyclonic wet scrubber, cyclone collector, and multicyclone.

4.4 Ranking of Remaining Control Technologies

Step 4 of the T-BACT process is to rank feasible control technologies by order of effectiveness. Effectiveness is defined by the ability of the control technology to reduce the post-treatment emission rate for toxic particulates and aerosols. An average removal efficiency was determined from documented ranges of removal efficiencies. Table 4-3 lists the control technologies for toxic particulates and aerosols in order of effectiveness. Technologies analyzed for the removal of toxic particulates and aerosols had removal efficiencies ranging from 72.5 to 99.9995%.

4.5 Evaluation of the Most Effective Control Technologies

Step 5 of the T-BACT process is evaluation of the most effective control technologies. The following section provides the methodology used to evaluate the most effective control technologies, taking into account the environmental, energy, and economic impacts.

4.5.1 Environmental, Energy and Economic Impacts

Step 5 of the T-BACT process is to evaluate the environmental, energy, and economic impacts of the potential control options, beginning with the most effective. Appendix B of 24590-WTP-RPT-ENV-01-005 provides data on the environmental, energy, and economic impacts for highly ranked applicable technologies for each unabated offgas stream analyzed during the previously completed T-BACT demonstration for the WTP. The results of the economic analyses are summarized as tables in 24590-WTP-RPT-ENV-01-005, Appendix B, Table B-2. The analyses concluded that HEPA filters, which are likewise the most effective feasible control technology for particulates and aerosols from the EMF, resulted in no unacceptable environmental, energy, or economic impacts. HEPA filters, in fact, tended to result in the least negative impacts of all control technologies proposed. Therefore, the conclusion reached through the analyses already performed for the existing T-BACT will be applied to the T-BACT for the EMF, because HEPA filters were the most efficient feasible control technology in both cases.

The economic analyses included factors for environmental impacts (secondary waste treatment and disposal costs) and energy impacts (utility costs). In addition, impacts on worker health and safety (e.g., potential worker exposures and labor for equipment maintenance) were included. The purpose of the economic evaluations was to compare “cost reasonableness” of the highly ranked technologies to determine whether environmental, energy, and economic impacts were acceptable. The economic evaluations were performed consistently across all technologies, and are rough order of magnitude cost estimates.

The economic analyses included evaluation of direct and indirect capital costs (equipment, installation, etc.), as well as annual operating costs (utilities, labor, and maintenance costs). To estimate the technology equipment costs, the equipment was sized based on the flow of each unabated offgas stream. The equipment cost estimates were based on EPA guidance documents and vendor information. Next, factors for fabrication from corrosion resistant materials and adaptation to hot cell operations and maintenance were applied, as shown in 24590-WTP-RPT-ENV-01-005, Appendix B, Table B-3. (**Note:** Hot cell operations and maintenance are not applicable to the EMF.) The economic analyses also included secondary waste treatment and disposal costs, except for secondary wastes suitable for recycle

within the WTP. The total annualized costs were based on a 40-year facility life and a 10% rate of return on capital investment.

The total annualized costs were then combined with the control efficiency data to provide an annual cost per ton of COPC reduction for each technology for each unabated offgas stream. From a determination of the "cost reasonableness" of these analyses (annual cost per ton of reduction), a determination was made that there were no unacceptable environmental, energy, or economic impact associated with the selection of HEPA filters, which are the control technology with the highest removal efficiency proposed as T-BACT in this analysis. Annual costs per ton of reduction in particulates and aerosols for dual-stage HEPA filtration ranged from $220.00 to $135 million. The cost of HEPA filtration for control of toxic particulates and aerosols is offset by the advantage of treating radionuclides with the same equipment. To maintain consistency with existing WTP facilities that have selected HEPA filters as T-BACT per the results of the previously completed economic analyses, the same conclusions shall be applied to the EMF in consideration to the environmental, energy, and economic impacts.

4.6 Proposed Best Available Control Technology for Toxic Air Pollutants

Dual-stage HEPA filters are the highest ranked proposed T-BACT control on the technology shortlist (Table 4-3) and do not result in any unacceptable environmental, energy, or economic impacts. Therefore, dual-stage HEPA filters are the proposed T-BACT for the control of particulate and aerosol emissions from the EMF. HEPA filters are particularly well suited for mitigation of particulates and aerosol emissions from the EMF process offgas because they are a passive control technology and do not result in any additional secondary liquid waste streams, such as those produced from technologies including wet scrubbers and WESPs. HEPA filters are a cost-effective, technically feasible control technology, and they have been proposed as T-BACT for other WTP process offgas systems in facilities throughout the Hanford Site.

Figure 4-8 provides a depiction of the DVP system exhaust with the proposed T-BACT in place.

Table 4-2 T-BACT Control Technology Screening for Control of Toxic Particulates and Aerosols

		Media (being treated)			
Description	**Category**	**Liquid**	**Solid**	**Screening Results**	**Comments**
Baghouse (Fabric) Filter	Filter		PM	Eliminated	Not applicable for low flow vessel vent system; large space requirement (multiple filter bags); frequent bag changeout to maintain efficiency
Prefilter (Roughing Filter)	Filter		PM	Applicable	
HEMF Filter	Filter	Aerosol	PM	Eliminated	No existing long-term, large-scale applications; free liquids with dissolved acid gases must be excluded for contact with the filters; high initial cost; repetitive cleaning efficiency not demonstrated
HEPA Filter	Filter	Aerosol	PM	Applicable	
ULPA Filter	Filter		PM	Eliminated	Not applicable for EMF emissions; frequent changing of filter media necessary to maintain efficiency; primarily applicable for medical and electronic clean room applications
Deep-Bed Sand Filter	Filter	Aerosol	PM	Eliminated	Not applicable for low flow vessel vent system; very large space requirement; bed channeling can reduce efficiency and require changeout of large quantity of filter media; significant decontamination and disposal impacts for large vault installations
Deep-Bed Glass Fiber Filter	Filter, Mist Eliminator		PM	Applicable	
HEME	Mist Eliminator	Aerosol	PM	Applicable	
Dry ESP	Precipitator		PM	Applicable	
WESP	Precipitator	Aerosol	PM	Applicable	
Ejector Venturi Scrubber	Scrubber	Aerosol	PM	Applicable	

Table 4-2 T-BACT Control Technology Screening for Control of Toxic Particulates and Aerosols

		Media (being treated)			
Description	**Category**	**Liquid**	**Solid**	**Screening Results**	**Comments**
Hydrosonic Air Atomized Scrubber	Scrubber	Aerosol	PM	Eliminated - redundant	Included under HSS
HSS	Scrubber	Aerosol	PM	Applicable	
Hydrosonic Steam Atomized Scrubber	Scrubber	Aerosol	PM	Eliminated - redundant	Included under HSS
Impingement Scrubber	Scrubber		PM	Eliminated - redundant	Included under impingement-plate / tray-tower scrubber
Impingement-Plate / Tray-Tower Scrubber	Scrubber		PM	Eliminated	Difficult due to frequent plugging and corrosion of trays/plates; not effective for submicron particulate removal
Mechanically-Aided Scrubber	Scrubber		PM	Eliminated	Operation difficult due to corrosion and problems with mechanical/moving parts; not effective for submicron particulate removal
Packed-Bed / Packed-Tower Wet Scrubber	Scrubber		PM	Applicable	
Spray Tower	Scrubber		PM	Eliminated - redundant	Included under spray-chamber / spray-tower wet scrubber
Spray-Chamber / Spray-Tower Wet Scrubber	Scrubber		PM	Applicable	
SBS	Scrubber	Aerosol	PM	Applicable	
Tray-Tower Scrubber	Scrubber		PM	Eliminated - redundant	Included under impingement-plate / tray-tower scrubber
Cyclonic Wet Scrubber	Scrubber		PM	Applicable	
Multiple Cyclone (Multicyclone)	Separator		PM	Applicable	
Cyclone Collector	Separator		PM	Applicable	

Table 4-3 T-BACT Technology Ranking by Effectiveness for Control of Toxic Particulates and Aerosols

Rank	Category	Control Technology	Average Removal Efficiency[1]
1	Filter	Dual-Stage HEPA Filter	99.9995%
2	Precipitator	Dry ESP	99.45%
3	Precipitator	WESP	99.45%
4	Mist Eliminator	HEME	99%
5	Scrubber	HSS	99%
6	Scrubber	SBS	98%
7	Filter	Deep Bed Glass Fiber Filter	95.75%
8	Separator	Cyclone Collector	90%
9	Filter	Prefilter (Roughing Filter) (Group III – HIGH)	90%
10	Separator	Multiple Cyclones (Multicyclones)	87.5%
11	Scrubber	Ejector Venturi Scrubber	84.5%
12	Scrubber	Spray-Chamber/Spray-Tower Wet Scrubber	84.5%
13	Scrubber	Cyclonic Wet Scrubbers	78.5%
14	Scrubber	Packed-Bed / Packed-Tower Wet Scrubber	72.5%

[1] Removal efficiencies represent the average of removal efficiencies documented in Section 4.2.2. Refer to Section 8 for a list of the literature sources.

Figure 4-1 Cyclone (Reverse-Flow Type)

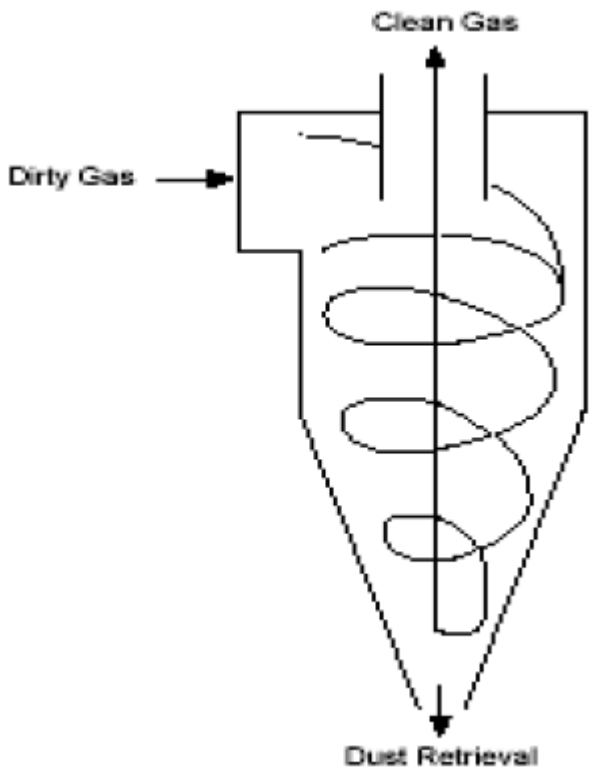

(**Source:** *Schematic of Cyclone* [EPA 2015a])

Figure 4-2 Baghouse Filter

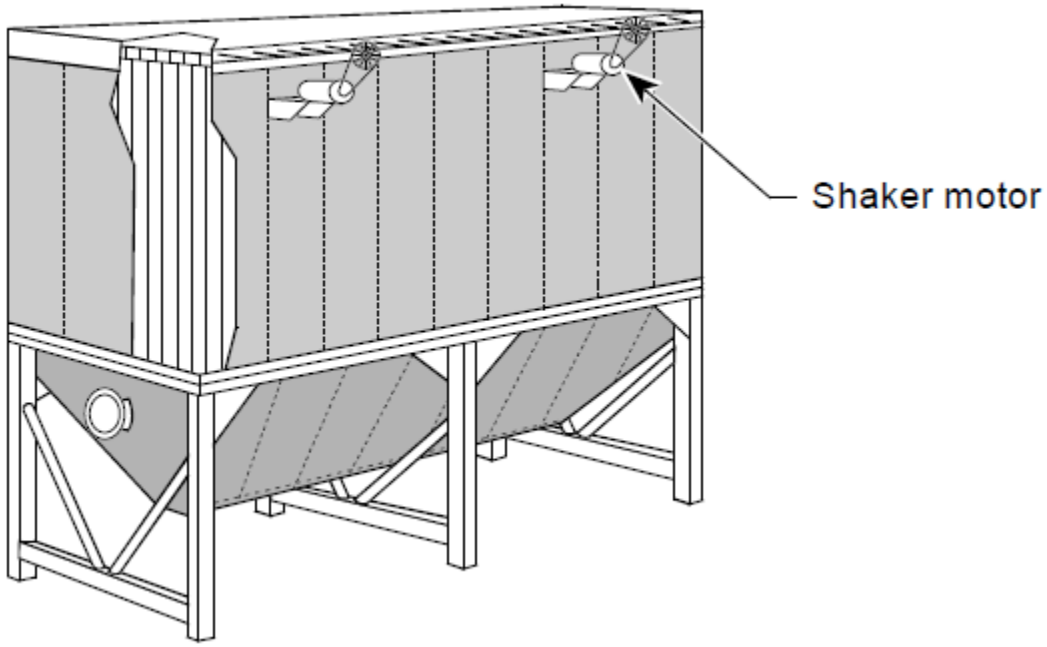

Typical Shaker Baghouse (**Source:** EPA/452/B-02-001 [EPA 2002], p 1-7)

Figure 4-3 High-Efficiency Metal Fiber Filter

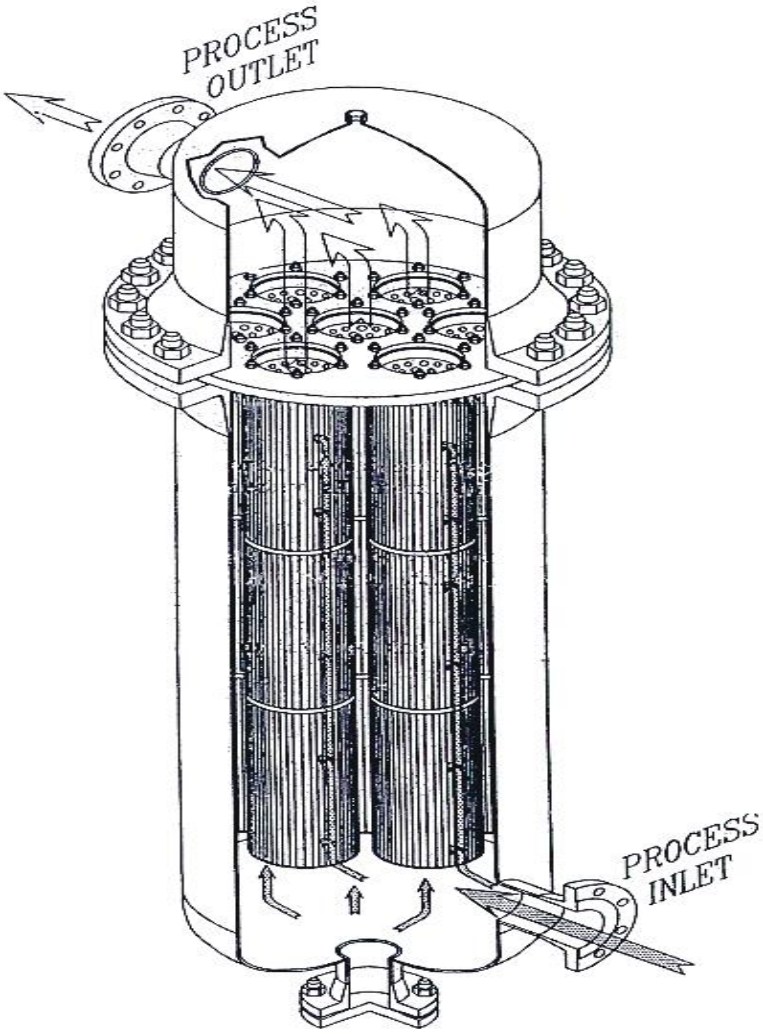

(**Source:** CCN 020413)

Figure 4-4 High-Efficiency Particulate Air Filters

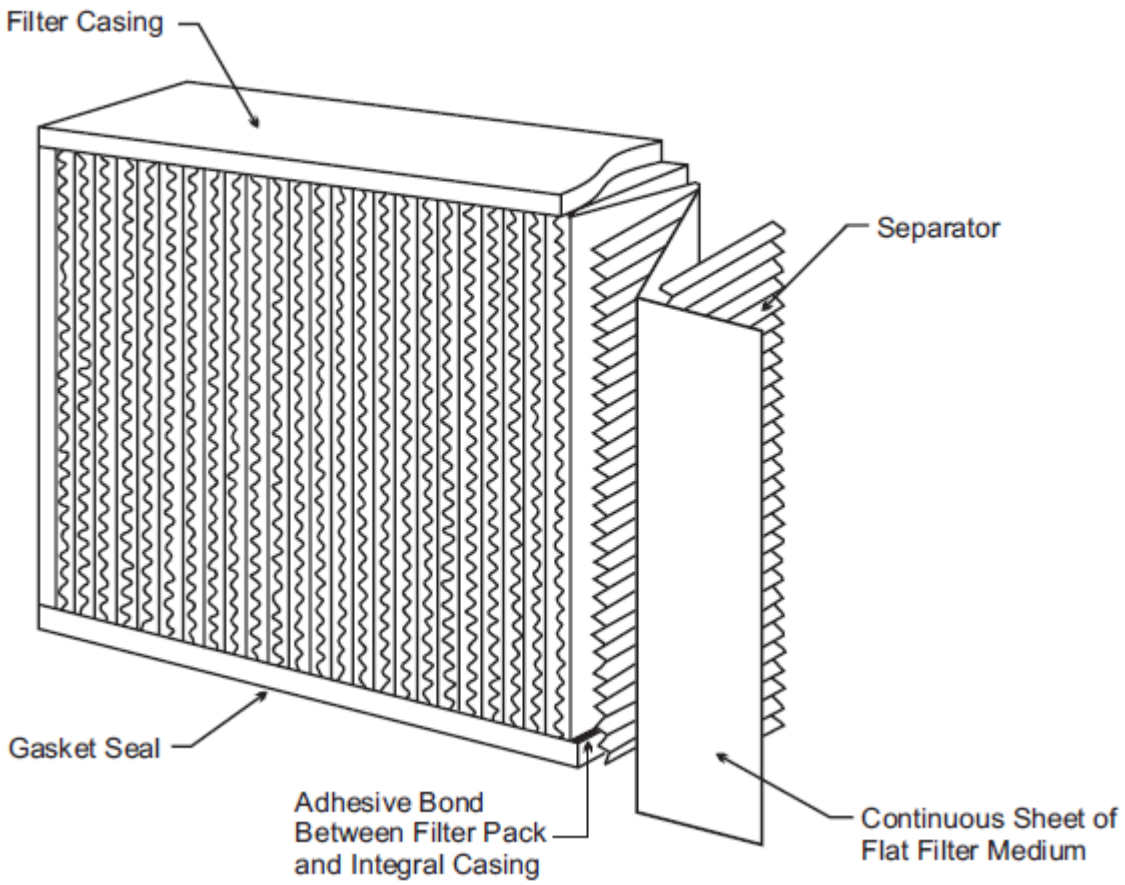

Open-Face, Deep-Pleat HEPA Filter – Type A Filter Pack (**Source:** DOE-HDBK-1169-2003 [DOE 2003], p 3-7)

Figure 4-5 Packed-Bed / Packed-Tower Scrubber

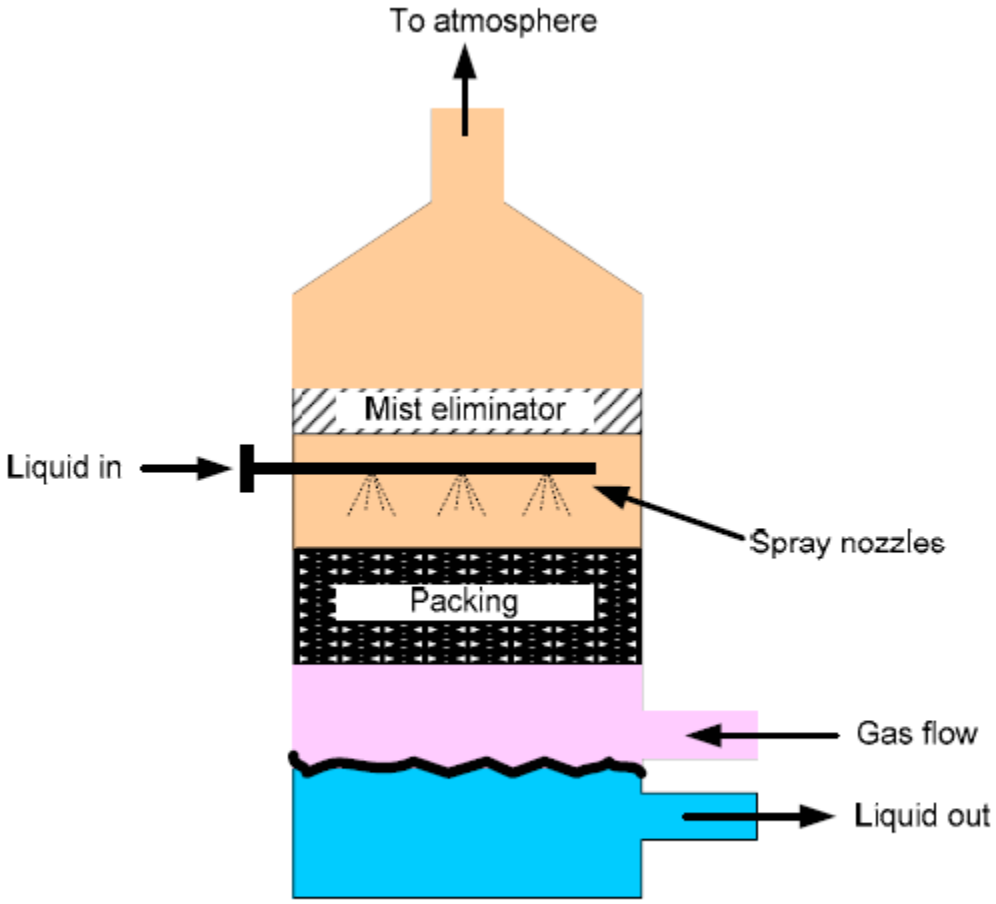

(**Source:** *Schematic of Packed Bed Wet Scrubber* [EPA 2015b])

Figure 4-6 Spray-Chamber / Spray-Tower Scrubber

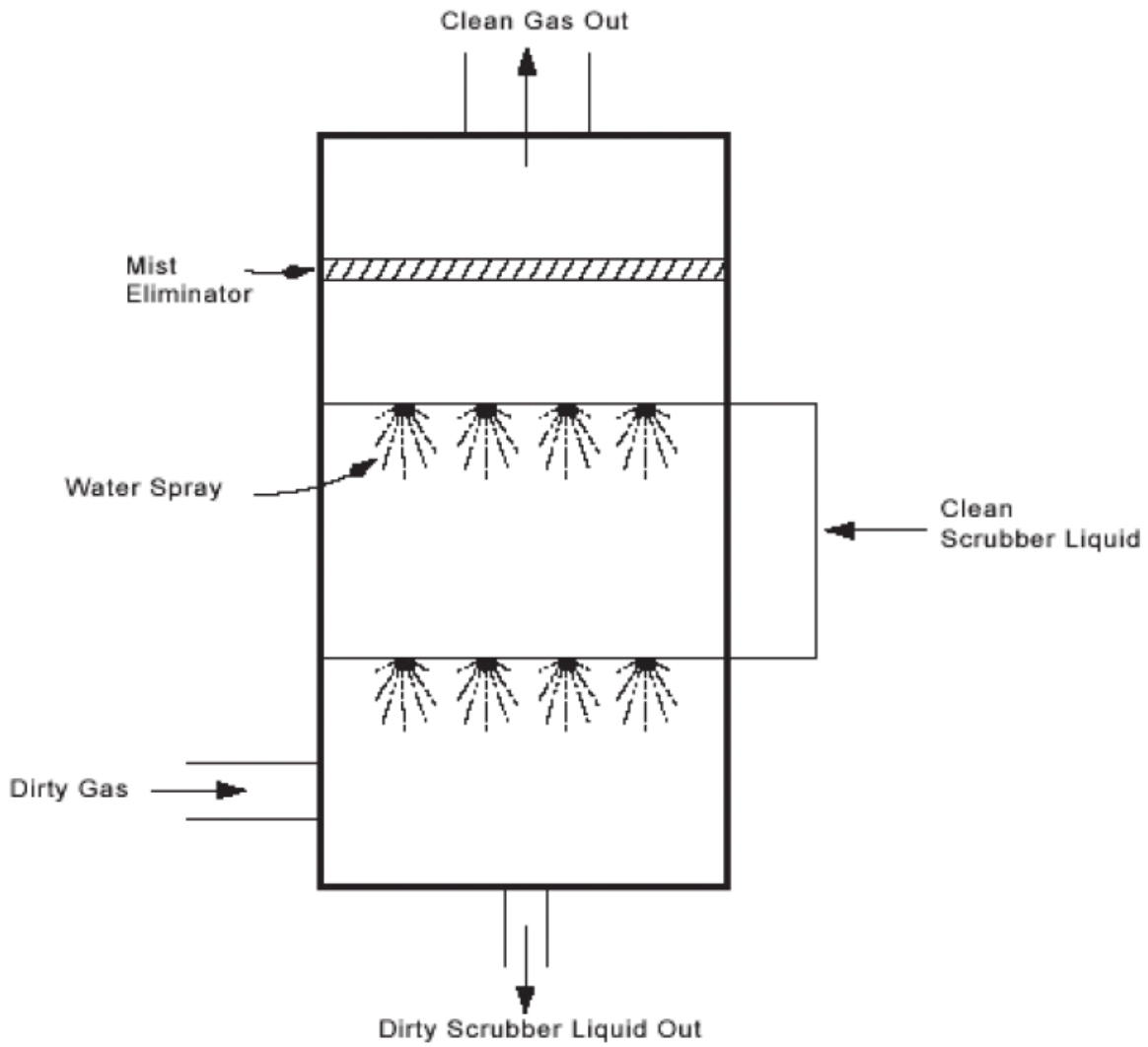

(**Source:** *Schematic of Wet Scrubbers* [EPA 2015c])

Figure 4-7 Submerged Bed Scrubber

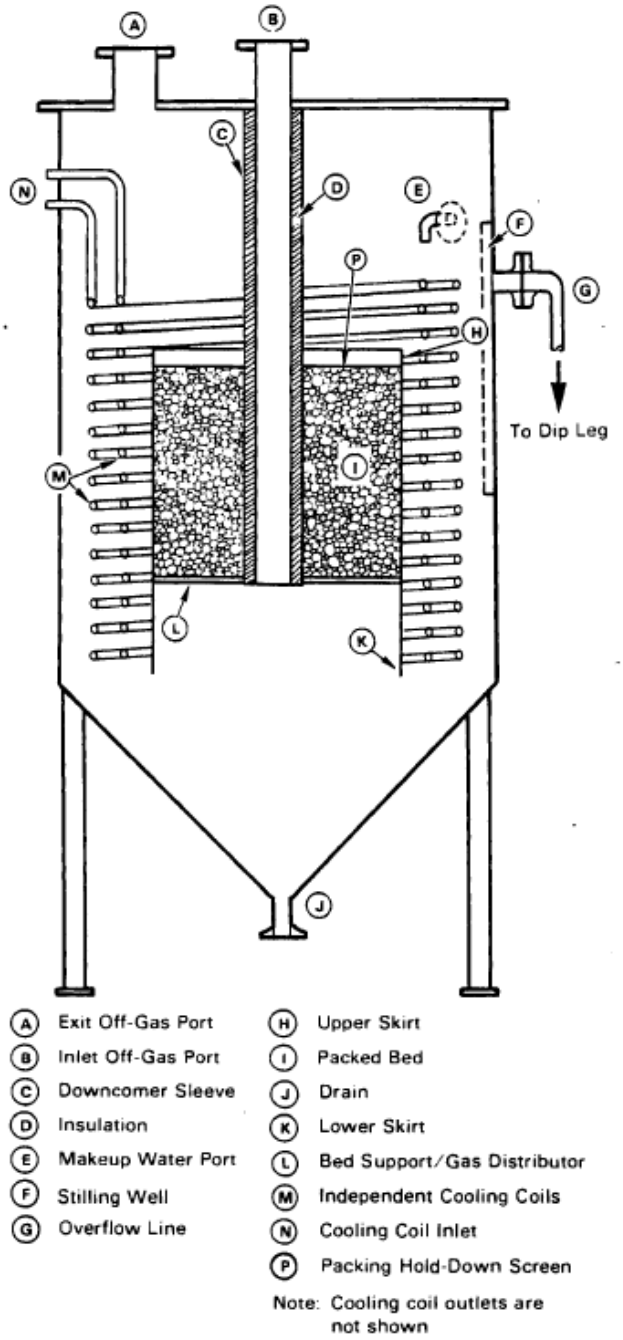

Cross-Sectional View (**Source:** PNL-6036 [Battelle 1987], p 2.3)

Figure 4-8 Direct Feed LAW Effluent Management Facility Vessel Vent Process System Exhaust

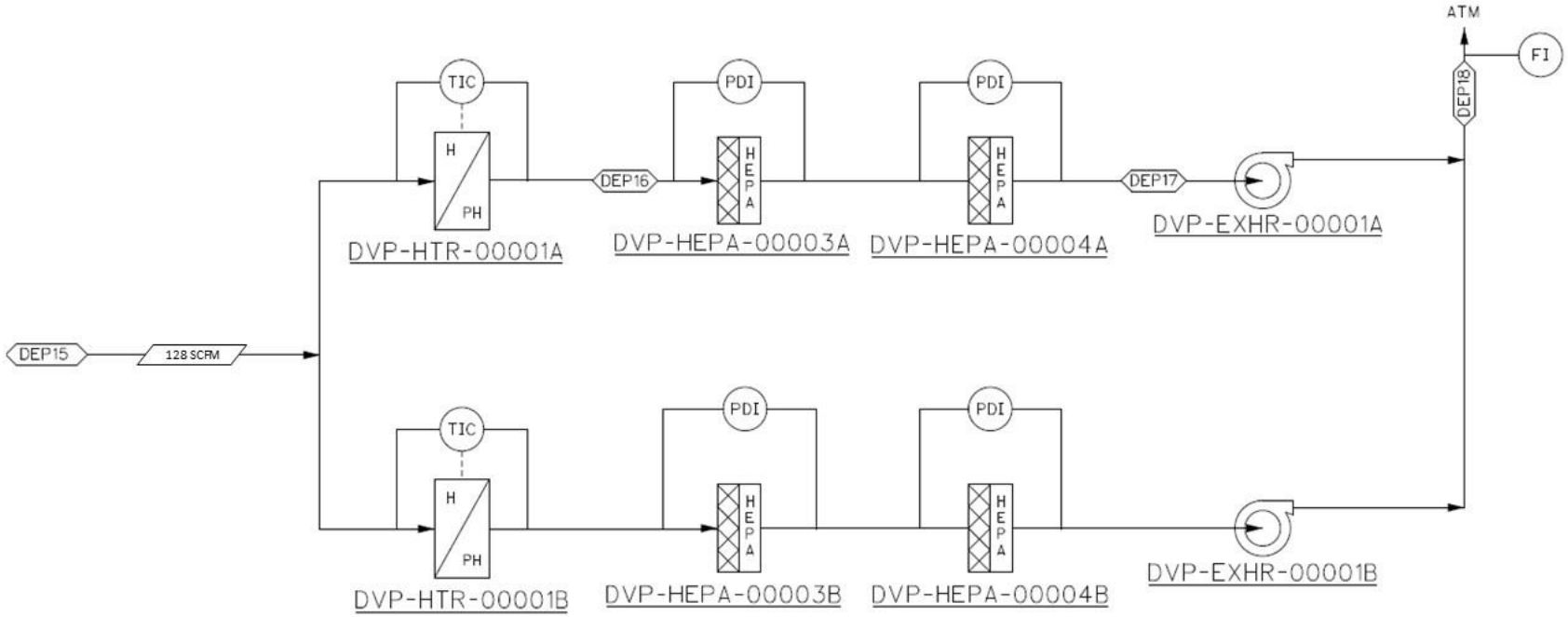

Note: Stream DEP18 is vented to the EMF stack for monitoring prior to release to atmosphere. The EMF stack releases DEP18 and the EMF building ACV exhaust.

5 Inorganic Gases

5.1 Emissions Estimate of Gaseous Inorganic Compounds from the Effluent Management Facility

The emissions estimate for the EMF (24590-BOF-M4C-DEP-00001) has identified two gaseous inorganic compounds emitted from emissions unit EM-1 that are listed as TAPs and are subject to new source review requirements under WAC 173-460. Ammonia and dimethyl mercury are estimated to exceed the de minimis emission thresholds listed under WAC 173-460-150, subjecting these emissions to new source review requirements. Table 5-1 identifies the inorganic gaseous compounds subject to new source review requirements under WAC 173-460. Appendix A, Table A-3 provides a complete table of EMF emissions exceeding de minimis quantities.

Table 5-1 EMF Gaseous Inorganic TAP Emissions versus De Minimis Values

CAS #	COPC	De Minimis Value (lb per averaging period)	Averaging Period	Unabated Emissions (DEP15) Estimate (lb per averaging period)	New Source Review Required
7664-41-7	Ammonia	0.465	24 hours	19.2	Yes
593-74-8	Dimethyl Mercury	1.00×10^{-99}	24 hours	1.01×10^{-4}	Yes

5.2 Unabated Ammonia Emissions from the Effluent Management Facility

At an unabated emissions rate of 19.2 lb/day, the annual estimated emissions of ammonia from the EMF is 3.5 TPY (US tons per year). A recently completed T-BACT analysis performed by Washington River Protection Solutions, for emissions from the Hanford double shell tank farms (DST) primary ventilation systems, conducted an economic evaluation of the best available control technologies for emissions of ammonia vapors. They concluded that, at an estimated rate of 13.12 TPY ammonia, the annual cost of removal exceeded the maximum ceiling cost effectiveness threshold of $105,000 per ton set by Ecology and EPA. The control technologies considered for T-BACT in this economic evaluation were thermal noncatalytic oxidation, activated carbon adsorption, and wet scrubber absorption. Cost of removal (cost per ton) for these technologies were estimated at $223,000, $392,000, and $577,000, respectively (refer to CCN 285552, *Engineering Change Notice - TOC-ENV-NOC-5241*, Table ES-1). Therefore, at an emissions rate of 3.5 TPY ammonia from the EMF—which is approximately one quarter of that estimated from DST operations—the use of BACT for ammonia emissions is determined to be prohibitively expensive.

5.3 Unabated Dimethyl Mercury Emissions from the Effluent Management Facility

At an unabated emissions rate of 1.01×10^{-4} lb/day, the annual estimated emissions of dimethyl mercury from the EMF is 1.84×10^{-5} TPY (0.037 lb/yr). A recently completed T-BACT analysis (performed by Washington River Protection Solutions) for emissions from the Hanford DST primary ventilation systems

conducted an economic evaluation of the BACT for emissions of gaseous dimethyl mercury. They concluded that, at an estimated rate of 2.61×10^{-4} TPY (0.52 lb/yr) dimethyl mercury, the annual cost of removal exceeded the maximum ceiling cost effectiveness threshold of $105,000 per ton set by Ecology and EPA. The BACT considered in this economic evaluation was activated carbon adsorption treated with sulfur or iodine. The estimated cost of removal (cost per ton) using this technology was $352 million (refer to CCN 285552, Table ES-1). Therefore, at an emissions rate of 1.84×10^{-5} TPY of dimethyl mercury from the EMF—which is one order of magnitude less than that estimated from DST operations—the use of the BACT for dimethyl mercury emissions is determined to be prohibitively expensive.

6 Volatile and Semivolatile Organic Compounds

6.1 Emissions Estimate of Volatile and Semivolatile Organic Compounds from the Effluent Management Facility

The emissions estimate for the EMF (24590-BOF-M4C-DEP-00001) has identified VOC/SVOCs emitted from emissions unit EM-1 that are listed as TAPs and are subject to new source review requirements under WAC 173-460. Table A-2 contains the emissions estimates of all organic COPCs from the EMF. Table A-3 contains a list of organic COPCs emitted from the EMF in quantities that exceed de minimis values. The total unabated emissions of all vapor phase organic COPCs from the EMF (including those that are not listed as TAPs under WAC 173-460-150) is 2.33×10^{-3} g/sec or 0.08 TPY. A recently completed T-BACT analysis performed by Washington River Protection Solutions, for emissions from the DST primary ventilation systems, investigated the cost per ton of removal of toxic organic compounds using BACT. The analysis concluded that removing 0.481 TPY toxic organic compounds would exceed the maximum ceiling cost effectiveness threshold ($105,000) set by Ecology and EPA for the Hanford Site as economically justifiable. Thermal noncatalytic oxidation and activated carbon adsorption were the two BACT considered in the aforementioned economic evaluations, each with an anticipated removal efficiency of 99%. The estimated cost of removal (cost per ton) for these technologies were $6.081 million/ton and $1.643 million/ton, respectively (refer to CCN 285552, Table ES-1). Therefore, at an emissions rate of only 0.08 TPY from the EMF, (compared to the 0.481 TPY from DSTs) the use of the BACT for VOC/SVOCs is determined to be prohibitively expensive.

7 Best Available Control Technology for Toxic Air Pollutants Summary and Recommendations

The technology with the highest removal efficiency for toxic constituents was selected as proposed T-BACT for EMF emissions where no unacceptable environmental, energy, or economic impacts were determined.

It should be noted that in addition to this T-BACT report, a complementary best available radioactive control technology report (24590-WTP-RPT-ENV-15-004) was prepared. Requirements to minimize radionuclide air emissions from the EMF were also a major factor in the final selection of the air emissions control technologies to be installed at the EMF.

7.1 Particulates and Aerosols

Dual-stage HEPA filters are proposed as T-BACT for the controls of toxic particulates and aerosols. The T-BACT analysis was based on dual-stage HEPA filtration with a removal efficiency of 99.9995%. According to previous cost estimates conducted in support of 24590-WTP-RPT-ENV-01-005, annual costs per ton of reduction in toxic particulates and aerosols for HEPA filtration ranged from $220.00 to $135 million. The environmental, energy, and economic analyses for HEPA filtration resulted in no unacceptable impacts. The cost of HEPA filtration for control of toxic particulates and aerosols is offset by the advantage of treating radionuclides with the same equipment.

7.2 Toxic Inorganic Gases

Ammonia and dimethyl mercury emissions were estimated to be greater than the de minimis values for TAPs listed under WAC 173-460-150. It was determined that in order to remove these pollutants with best available technologies, the cost per ton to remove these pollutants would exceed the maximum ceiling cost effectiveness threshold of $105,000 per ton previously set by Ecology and EPA (refer to CCN 285552). Therefore, due to the extremely low emissions rates and prohibitive cost per ton to remove these pollutants, no T-BACT is proposed for mitigation of these emissions.

7.3 Volatile Organic Compounds

Total VOC/SVOCs emitted from the EMF are estimated to be 0.08 TPY. It was determined that in order to remove these pollutants with best available technologies, the cost per ton to remove these pollutants would exceed the maximum ceiling cost effectiveness threshold of $105,000 per ton previously set by Ecology and EPA (refer to CCN 285552). Therefore, due to the extremely low emissions rates and prohibitive cost per ton to remove these pollutants, no T-BACT is proposed to mitigate VOC/SVOC emissions.

8 References

8.1 Project References

24590-101-TSA-W000-0009-177-00001, *Final Report – Summary of DM1200 SBS History and Performance* (VSL-06R6410-2). Vitreous State Laboratory, The Catholic University of America, Washington, DC.

24590-BOF-M4C-DEP-00001, *DFLAW Effluent Management Facility Air Emissions Estimate*.

24590-LAW-PDACP-NS-15-0002, *DF LAW Update for LAW and Addition of the Effluent Management Facility and Transfer Lines.*

24590-WTP-M6-50-00002, *P&ID Symbols and Legend Sheet 2 of 8.*

24590-WTP-RPT-ENV-01-005, *Best Available Control Technology Analysis for Toxic Air Pollutants for the WTP*.

24590-WTP-RPT-ENV-15-004, *Best Available Radionuclide Control Technology Analysis Addendum for the WTP Effluent Management Facility.*

CCN 020413, memorandum, *HEMF Filter Evaluation.* 29 May 2001.

CCN 285552, email, *Engineering Change Notice - TOC-ENV-NOC-524*. 19 February 2016.

RPT-W375-EN00007, *Best Available Radionuclide Control Technology for the RPP-WTP*.

8.2 Other References

Battelle. 1987. *Design Procedure for Sizing a Submerged-Bed Scrubber for Airborne Particulate Removal*, PNL-6036. Pacific Northwest Laboratory, Richland, WA.

DOE. 1993. *Proceedings of the 22nd DOE/NRC Nuclear Air Cleaning Conference, Sessions 9-16*, NUREG/CP-0130, CONF-9020823, Vol. 2, Session 10, Filters and Filter Performance. US Department of Energy, Washington, DC.

DOE. 2000. DOE Contract DE-AC27-01RV14136, *Hanford Tank Waste Treatment and Immobilization Plant*, as amended. US Department of Energy, Washington, DC.

DOE. 2003. *Nuclear Air Cleaning Handbook*, DOE-HDBK-1169-2003, 4th Edition. US Department of Energy, Washington, DC.

EPA. 1990. *EPA New Source Review Workshop Manual, Prevention of Significant Deterioration and Nonattainment Area Permitting*, TD8831N481990. US Environmental Protection Agency, Washington, DC.

EPA. 2002. *EPA Air Pollution Control Cost Manual*, EPA/452/B-02-001, Sixth Edition. US Environmental Protection Agency, Washington, DC.

EPA. 2003a. *Air Pollution Control Technology Fact Sheet – Cyclones*, EPA-452/F-03-005. US Environmental Protection Agency, Washington, DC.

EPA. 2003b. *Air Pollution Control Technology Fact Sheet – Dry Electrostatic Precipitator (ESP) – Wire-Pipe Type*, EPA-452/F-03-027. US Environmental Protection Agency, Washington, DC.

EPA. 2003c. *Air Pollution Control Technology Fact Sheet – Dry Electrostatic Precipitator (ESP) – Wire-Plate Type*, EPA-452/F-03-028. US Environmental Protection Agency, Washington, DC.

EPA. 2003d. *Air Pollution Control Technology Fact Sheet – Wet Electrostatic Precipitator (ESP) – Wire-Pipe Type*, EPA-452/F-03-029. US Environmental Protection Agency, Washington, DC.

EPA. 2003e. *Air Pollution Control Technology Fact Sheet – Wet Electrostatic Precipitator (ESP) – Wire-Plate Type*, EPA-452/F-03-030. US Environmental Protection Agency, Washington, DC.

EPA. 2003f. *Air Pollution Control Technology Fact Sheet – Fabric Filter – Mechanical Shaker Cleaned Type*, EPA-452/F-03-024. US Environmental Protection Agency, Washington, DC.

EPA. 2003g. *Air Pollution Control Technology Fact Sheet – Fabric Filter – HEPA and ULPA Type*, EPA-452/F-03-023. US Environmental Protection Agency, Washington, DC.

EPA. 2003h. *Air Pollution Control Technology Fact Sheet – Venturi Scrubber*, EPA-452/F-03-017. US Environmental Protection Agency, Washington, DC.

EPA. 2003i. *Air Pollution Control Technology Fact Sheet – Impingement-Plate/Tray-Tower Scrubber*, EPA-452/F-03-012. US Environmental Protection Agency, Washington, DC.

EPA. 2003j. *Air Pollution Control Technology Fact Sheet – Mechanically-Aided Scrubber*, EPA-452/F-03-013. US Environmental Protection Agency, Washington, DC.

EPA. 2003k. *Air Pollution Control Technology Fact Sheet – Packed-Bed/Packed-Tower Scrubber*, EPA-452/F-03-015. US Environmental Protection Agency, Washington, DC.

EPA. 2003l. *Air Pollution Control Technology Fact Sheet – Spray-Tower Scrubber*, EPA-452/F-03-016. US Environmental Protection Agency, Washington, DC.

EPA. 2015a. *Schematic of Cyclone*. US Environmental Protection Agency, Washington, DC. (http://www3.epa.gov/ttnchie1/mkb/documents/Cyclone.pdf) accessed May 25, 2016.

EPA. 2015b. *Schematic of Packed Bed Wet Scrubber*. US Environmental Protection Agency, Washington, DC. (http://www3.epa.gov/ttnchie1/mkb/documents/Packed%20Bed%20Scrubber_5-5-05.pdf) accessed May 25, 2016.

EPA. 2015c. *Schematic of Wet Scrubbers*. US Environmental Protection Agency, Washington, DC. (http://www3.epa.gov/ttnchie1/mkb/documents/WS.pdf) accessed May 25, 2016.

Koch-Glitsch. 2015. *Mist Elimination Liquid-Liquid Coalescing*, Bulletin MELLC-02, Rev 3. Koch-Glitsch, LP, Wichita, KS.

RCW 70.94. *Washington Clean Air Act*. Revised Code of Washington, Olympia, WA.

Vanaire. *Mist Eliminators*. Vanaire, Louisville, KY. (http://products.vanaire.com/Asset/Mist-Eliminators.pdf) accessed May 25, 2016.

WAC 173-400-110. *General Regulations for Air Pollution Sources – New Source Review (NSR) for Sources and Portable Sources.* Washington Administrative Code, Olympia, WA.

WAC 173-460. 2009. *Control for New Sources of Toxic Air Pollutants*. Washington Administrative Code, Olympia, WA.

Westinghouse. 1992. *Hanford Waste Vitrification Plant Technical Background Document for Toxics Best Available Control Technology Demonstration*, WHC-MR-0398, Appendix C. Westinghouse Hanford Company, Richland, WA.

Appendix A

Constituents of Potential Concern Emissions Estimates for the Effluent Management Facility

Appendix A
Constituents of Potential Concern Emissions Estimates for the Effluent Management Facility

Table A-1 Inorganic COPCs Emissions Estimate from the Direct Feed LAW Effluent Management Facility Vessel Vent Process (DVP) System

CAS #	COPC	Unabated Streams	Abated Streams	Phase
		DEP15	DEP18	
		DVP System	DVP System	
		g/sec	g/sec	
7440-22-4	Ag	1.92E−07	9.59E−13	Particle/Aerosol
7429-90-5	Al	2.12E−04	1.06E−09	Particle/Aerosol
7440-38-2	As	2.64E−07	1.32E−12	Particle/Aerosol
7440-39-3	Ba	4.56E−07	2.28E−12	Particle/Aerosol
7440-41-7	Be	2.39E−08	1.20E−13	Particle/Aerosol
24959-67-9	Br	5.36E−07	2.68E−12	Particle/Aerosol
7440-43-9	Cd	4.06E−07	2.03E−12	Particle/Aerosol
16887-00-6	Cl	2.02E−05	1.01E−10	Particle/Aerosol
57-12-5	CN	1.26E−04	1.26E−04	Vapor
7440-48-4	Co	8.02E−08	4.01E−13	Particle/Aerosol
7440-47-3	Cr	1.44E−05	7.20E−11	Particle/Aerosol
7440-50-8	Cu	1.46E−07	7.28E−13	Particle/Aerosol
16984-48-8	F	3.14E−05	1.57E−10	Particle/Aerosol
7439-89-6	Fe	3.09E−05	1.54E−10	Particle/Aerosol
7439-97-6	Hg	1.48E−07	7.38E−13	Particle/Aerosol
7439-93-2	Li	1.00E−07	5.01E−13	Particle/Aerosol
7439-95-4	Mg	1.13E−06	5.67E−12	Particle/Aerosol
7439-96-5	Mn	4.02E−06	2.01E−11	Particle/Aerosol
7439-98-7	Mo	3.35E−07	1.68E−12	Particle/Aerosol
7440-23-5	Na	1.21E−03	6.04E−09	Particle/Aerosol
7664-41-7	NH_3	1.01E−01	1.01E−01	Vapor
7440-02-0	Ni	2.41E−06	1.20E−11	Particle/Aerosol
14797-65-0	NO_2	2.90E−04	1.45E−09	Particle/Aerosol
14797-55-8	NO_3	1.36E−03	6.81E−09	Particle/Aerosol
7723-14-0	P	0.00E+00	0.00E+00	Particle/Aerosol
7439-92-1	Pb	2.01E−06	1.01E−11	Particle/Aerosol
14265-44-2	PO_4	1.26E−04	6.29E−10	Particle/Aerosol
7440-16-6	Rh	3.02E−07	1.51E−12	Particle/Aerosol
7704-34-9	S	0.00E+00	0.00E+00	Particle/Aerosol

Table A-1 Inorganic COPCs Emissions Estimate from the Direct Feed LAW Effluent Management Facility Vessel Vent Process (DVP) System

CAS #	COPC	Unabated Streams	Abated Streams	Phase
		DEP15	DEP18	
		DVP System	DVP System	
		g/sec	g/sec	
7440-36-0	Sb	2.08E−07	1.04E−12	Particle/Aerosol
7782-49-2	Se	2.94E−07	1.47E−12	Particle/Aerosol
7440-31-5	Sn	2.83E−07	1.41E−12	Particle/Aerosol
14808-79-8	SO_4	9.39E−05	4.69E−10	Particle/Aerosol
7440-24-6	Sr	1.03E−06	5.16E−12	Particle/Aerosol
7440-25-7	Ta	9.83E−08	4.92E−13	Particle/Aerosol
7440-28-0	Tl	7.63E−07	3.81E−12	Particle/Aerosol
7440-61-1	UTOTAL	1.57E−05	7.87E−11	Particle/Aerosol
7440-62-2	V	1.33E−07	6.63E−13	Particle/Aerosol
7440-33-7	W	2.06E−06	1.03E−11	Particle/Aerosol
7440-65-5	Y	8.18E−08	4.09E−13	Particle/Aerosol
7440-66-6	Zn	2.87E−07	1.43E−12	Particle/Aerosol
7440-67-7	Zr	9.97E−06	4.98E−11	Particle/Aerosol
593-74-8	$(CH_3)_2Hg$ (Dimethyl mercury)	5.29E−07	5.29E−07	Vapor
10102-44-0	NO_2	0.00E+00	0.00E+00	Vapor
124-38-9	CO_2	0.00E+00	0.00E+00	Vapor
630-08-0	CO	0.00E+00	0.00E+00	Vapor
10028-15-6	O_3	0.00E+00	0.00E+00	Vapor
7446-09-5	SO_2	0.00E+00	0.00E+00	Vapor
7647-01-0	HCl	0.00E+00	0.00E+00	Vapor
7664-39-3	HF	0.00E+00	0.00E+00	Vapor
7782-41-4	F_2	0.00E+00	0.00E+00	Vapor
7782-50-5	Cl_2	0.00E+00	0.00E+00	Vapor
22967-92-6	CH_3Hg (Methyl mercury)	0.00E+00	0.00E+00	Particle/Aerosol
	Subtotal (Particle/Aerosol)	**3.43E−03**	**1.72E−08**	**Particle/Aerosol**
	Subtotal (Vapor)	**1.01E−01**	**1.01E−01**	**Vapor**
	TOTAL	**1.04E−01**	**1.01E−01**	

Source: 24590-BOF-M4C-DEP-00001

Table A-2 Organic COPCs Emissions Estimate from the Direct Feed LAW Effluent Management Facility Vessel Vent Process (DVP) System

CAS #	COPC (Note 1)	Unabated Streams			Abated Streams		
		DEP15			DEP18		
		DVP System			DVP System		
		Vapor	Particulate	Total	Vapor	Particulate	Total
		g/sec	g/sec	g/sec	g/sec	g/sec	g/sec
630-20-6	1,1,1,2-Tetrachloroethane	1.69E−05	0.00E+00	1.69E−05	1.69E−05	0.00E+00	1.69E−05
71-55-6	1,1,1-Trichloroethane	1.98E−10	0.00E+00	1.98E−10	1.98E−10	0.00E+00	1.98E−10
79-34-5	1,1,2,2-Tetrachloroethane	1.88E−10	0.00E+00	1.88E−10	1.88E−10	0.00E+00	1.88E−10
127-18-4	Tetrachloroethene	1.95E−10	0.00E+00	1.95E−10	1.95E−10	0.00E+00	1.95E−10
79-00-5	1,1,2-Trichloroethane	1.87E−10	0.00E+00	1.87E−10	1.87E−10	0.00E+00	1.87E−10
79-01-6	Trichloroethene	2.13E−10	4.31E−10	6.44E−10	2.13E−10	2.15E−15	2.13E−10
92-52-4	Biphenyl	3.73E−08	0.00E+00	3.73E−08	3.73E−08	0.00E+00	3.73E−08
75-34-3	1,1-Dichloroethane	1.60E−10	0.00E+00	1.60E−10	1.60E−10	0.00E+00	1.60E−10
75-35-4	1,1-Dichloroethene	2.52E−10	0.00E+00	2.52E−10	2.52E−10	0.00E+00	2.52E−10
76-13-1	1,1,2-Trichloro-1,2,2-trifluoroethane	4.89E−10	0.00E+00	4.89E−10	4.89E−10	0.00E+00	4.89E−10
120-82-1	1,2,4-Trichlorobenzene	1.18E−08	0.00E+00	1.18E−08	1.18E−08	0.00E+00	1.18E−08
95-50-1	1,2-Dichlorobenzene	1.54E−07	0.00E+00	1.54E−07	1.54E−07	0.00E+00	1.54E−07
107-06-2	1,2-Dichloroethane	1.87E−10	4.31E−10	6.18E−10	1.87E−10	2.15E−15	1.87E−10
78-87-5	1,2-Dichloropropane	1.60E−10	0.00E+00	1.60E−10	1.60E−10	0.00E+00	1.60E−10
106-88-7	1,2-Epoxybutane	1.69E−05	0.00E+00	1.69E−05	1.69E−05	0.00E+00	1.69E−05
156-60-5	1,2-trans-Dichloroethene	1.69E−05	0.00E+00	1.69E−05	1.69E−05	0.00E+00	1.69E−05
106-99-0	1,3-Butadiene	5.37E−09	0.00E+00	5.37E−09	5.37E−09	0.00E+00	5.37E−09
541-73-1	1,3-Dichlorobenzene	7.76E−09	0.00E+00	7.76E−09	7.76E−09	0.00E+00	7.76E−09
106-46-7	1,4-Dichlorobenzene	1.01E−07	4.31E−10	1.02E−07	1.01E−07	2.15E−15	1.01E−07
123-91-1	1,4-Dioxane	5.91E−09	0.00E+00	5.91E−09	5.91E−09	0.00E+00	5.91E−09
75-01-4	Vinyl chloride	4.05E−10	0.00E+00	4.05E−10	4.05E−10	0.00E+00	4.05E−10
58-90-2	2,3,4,6-Tetrachlorophenol	1.69E−05	0.00E+00	1.69E−05	1.69E−05	0.00E+00	1.69E−05

Table A-2 Organic COPCs Emissions Estimate from the Direct Feed LAW Effluent Management Facility Vessel Vent Process (DVP) System

CAS #	COPC (Note 1)	Unabated Streams			Abated Streams		
		DEP15			DEP18		
		DVP System			DVP System		
		Vapor	Particulate	Total	Vapor	Particulate	Total
		g/sec	g/sec	g/sec	g/sec	g/sec	g/sec
95-95-4	2,4,5-Trichlorophenol	4.87E−05	0.00E+00	4.87E−05	4.87E−05	0.00E+00	4.87E−05
88-06-2	2,4,6-Trichlorophenol	1.68E−06	0.00E+00	1.68E−06	1.68E−06	0.00E+00	1.68E−06
120-83-2	2,4-Dichlorophenol	1.69E−05	0.00E+00	1.69E−05	1.69E−05	0.00E+00	1.69E−05
121-14-2	2,4-Dinitrotoluene	2.27E−08	1.32E−10	2.29E−08	2.27E−08	6.62E−16	2.27E−08
128-37-0	2,6-Bis(1,1-dimethylethyl)-4-methylphenol	2.83E−07	0.00E+00	2.83E−07	2.83E−07	0.00E+00	2.83E−07
78-93-3	2-Butanone	6.40E−08	4.31E−10	6.44E−08	6.40E−08	2.15E−15	6.40E−08
111-76-2	2-Butoxyethanol	1.69E−05	0.00E+00	1.69E−05	1.69E−05	0.00E+00	1.69E−05
91-58-7	2-Chloronaphthalene	1.69E−05	0.00E+00	1.69E−05	1.69E−05	0.00E+00	1.69E−05
95-57-8	2-Chlorophenol	5.36E−05	0.00E+00	5.36E−05	5.36E−05	0.00E+00	5.36E−05
110-80-5	2-Ethoxyethanol	1.13E−04	0.00E+00	1.13E−04	1.13E−04	0.00E+00	1.13E−04
104-76-7	2-Ethyl-1-hexanol	1.69E−05	0.00E+00	1.69E−05	1.69E−05	0.00E+00	1.69E−05
591-78-6	2-Hexanone	2.55E−08	0.00E+00	2.55E−08	2.55E−08	0.00E+00	2.55E−08
126-98-7	2-Methyl-2-propenenitrile	5.91E−09	0.00E+00	5.91E−09	5.91E−09	0.00E+00	5.91E−09
78-83-1	Isobutanol	2.77E−04	0.00E+00	2.77E−04	2.77E−04	0.00E+00	2.77E−04
88-75-5	2-Nitrophenol	5.04E−05	4.31E−10	5.04E−05	5.04E−05	2.15E−15	5.04E−05
79-46-9	2-Nitropropane	3.95E−08	0.00E+00	3.95E−08	3.95E−08	0.00E+00	3.95E−08
67-64-1	Acetone	2.80E−07	4.31E−10	2.81E−07	2.80E−07	2.15E−15	2.80E−07
79-10-7	2-Propenoic acid	1.69E−05	0.00E+00	1.69E−05	1.69E−05	0.00E+00	1.69E−05
67-63-0	Isopropyl alcohol	1.65E−08	0.00E+00	1.65E−08	1.65E−08	0.00E+00	1.65E−08
107-05-1	3-Chloropropene	5.91E−10	0.00E+00	5.91E−10	5.91E−10	0.00E+00	5.91E−10
589-38-8	3-Hexanone	1.69E−05	0.00E+00	1.69E−05	1.69E−05	0.00E+00	1.69E−05
56-49-5	3-Methylcholanthrene	1.69E−05	0.00E+00	1.69E−05	1.69E−05	0.00E+00	1.69E−05

Table A-2 Organic COPCs Emissions Estimate from the Direct Feed LAW Effluent Management Facility Vessel Vent Process (DVP) System

CAS #	COPC (Note 1)	Unabated Streams			Abated Streams		
		DEP15			DEP18		
		DVP System			DVP System		
		Vapor	Particulate	Total	Vapor	Particulate	Total
		g/sec	g/sec	g/sec	g/sec	g/sec	g/sec
72-55-9	4,4-DDE	1.69E−05	0.00E+00	1.69E−05	1.69E−05	0.00E+00	1.69E−05
101-55-3	4-Bromophenylphenyl ether	1.69E−05	0.00E+00	1.69E−05	1.69E−05	0.00E+00	1.69E−05
59-50-7	4-Chloro-3-methylphenol	5.19E−05	0.00E+00	5.19E−05	5.19E−05	0.00E+00	5.19E−05
100-40-3	4-Ethenylcyclohexene	1.69E−05	0.00E+00	1.69E−05	1.69E−05	0.00E+00	1.69E−05
108-10-1	Hexone	2.09E−09	0.00E+00	2.09E−09	2.09E−09	0.00E+00	2.09E−09
3697-24-3	5-Methylchrysene	1.69E−05	0.00E+00	1.69E−05	1.69E−05	0.00E+00	1.69E−05
602-87-9	5-Nitroacenaphthene	1.69E−05	0.00E+00	1.69E−05	1.69E−05	0.00E+00	1.69E−05
83-32-9	Acenaphthene	5.66E−05	4.31E−10	5.66E−05	5.66E−05	2.15E−15	5.66E−05
208-96-8	Acenaphthylene	1.69E−05	4.31E−10	1.69E−05	1.69E−05	2.15E−15	1.69E−05
75-07-0	Acetaldehyde	1.69E−05	0.00E+00	1.69E−05	1.69E−05	0.00E+00	1.69E−05
60-35-5	Acetamide	1.69E−05	0.00E+00	1.69E−05	1.69E−05	0.00E+00	1.69E−05
141-78-6	Ethyl acetate	6.31E−10	0.00E+00	6.31E−10	6.31E−10	0.00E+00	6.31E−10
108-05-4	vinyl acetate	1.69E−05	0.00E+00	1.69E−05	1.69E−05	0.00E+00	1.69E−05
75-05-8	Acetonitrile	1.46E−07	4.31E−10	1.46E−07	1.46E−07	2.15E−15	1.46E−07
98-86-2	Acetophenone	3.73E−08	4.31E−10	3.77E−08	3.73E−08	2.15E−15	3.73E−08
107-02-8	Acrolein	8.68E−09	0.00E+00	8.68E−09	8.68E−09	0.00E+00	8.68E−09
107-13-1	Acrylonitrile	5.91E−09	4.31E−10	6.34E−09	5.91E−09	2.15E−15	5.91E−09
134-32-7	alpha-Naphthylamine	1.69E−05	0.00E+00	1.69E−05	1.69E−05	0.00E+00	1.69E−05
120-12-7	Anthracene	1.69E−05	4.88E−12	1.69E−05	1.69E−05	2.44E−17	1.69E−05
71-43-2	Benzene	5.05E−10	4.31E−10	9.36E−10	5.05E−10	2.15E−15	5.05E−10
50-32-8	Benzo(a)pyrene	6.77E−09	3.86E−11	6.81E−09	6.77E−09	1.93E−16	6.77E−09
191-24-2	Benzo(ghi)perylene	1.69E−05	2.28E−09	1.69E−05	1.69E−05	1.14E−14	1.69E−05

Table A-2 Organic COPCs Emissions Estimate from the Direct Feed LAW Effluent Management Facility Vessel Vent Process (DVP) System

CAS #	COPC (Note 1)	Unabated Streams			Abated Streams		
		DEP15			DEP18		
		DVP System			DVP System		
		Vapor	Particulate	Total	Vapor	Particulate	Total
		g/sec	g/sec	g/sec	g/sec	g/sec	g/sec
117-81-7	Bis(2-ethylhexyl)phthalate	1.69E−05	9.90E−10	1.69E−05	1.69E−05	4.95E−15	1.69E−05
75-27-4	Bromodichloromethane	1.69E−05	0.00E+00	1.69E−05	1.69E−05	0.00E+00	1.69E−05
74-83-9	Bromomethane	3.99E−10	4.31E−10	8.30E−10	3.99E−10	2.15E−15	3.99E−10
123-72-8	Butanal	1.69E−05	0.00E+00	1.69E−05	1.69E−05	0.00E+00	1.69E−05
85-68-7	Butylbenzylphthalate	1.04E−04	1.33E−08	1.04E−04	1.04E−04	6.66E−14	1.04E−04
56-23-5	Carbon tetrachloride	3.05E−10	4.31E−10	7.36E−10	3.05E−10	2.15E−15	3.05E−10
108-90-7	Chlorobenzene	1.93E−10	4.31E−10	6.23E−10	1.93E−10	2.15E−15	1.93E−10
75-45-6	Chlorodifluoromethane	5.91E−10	0.00E+00	5.91E−10	5.91E−10	0.00E+00	5.91E−10
75-00-3	Chloroethane	3.99E−10	0.00E+00	3.99E−10	3.99E−10	0.00E+00	3.99E−10
67-66-3	Chloroform	2.00E−10	4.31E−10	6.31E−10	2.00E−10	2.15E−15	2.00E−10
74-87-3	Chloromethane	7.95E−10	4.31E−10	1.23E−09	7.95E−10	2.15E−15	7.95E−10
10061-01-5	cis-1,3-Dichloropropene	5.91E−10	0.00E+00	5.91E−10	5.91E−10	0.00E+00	5.91E−10
108-39-4	m-Cresol	4.29E−05	0.00E+00	4.29E−05	4.29E−05	0.00E+00	4.29E−05
95-48-7	2-Methylphenol	5.96E−05	0.00E+00	5.96E−05	5.96E−05	0.00E+00	5.96E−05
98-82-8	Isopropylbenzene	1.69E−05	0.00E+00	1.69E−05	1.69E−05	0.00E+00	1.69E−05
110-82-7	Cyclohexane	5.91E−10	0.00E+00	5.91E−10	5.91E−10	0.00E+00	5.91E−10
108-94-1	Cyclohexanone	5.77E−07	0.00E+00	5.77E−07	5.77E−07	0.00E+00	5.77E−07
226-36-8	Dibenz[a,h]acridine	1.69E−05	0.00E+00	1.69E−05	1.69E−05	0.00E+00	1.69E−05
53-70-3	Dibenz[a,h]anthracene	1.45E−09	2.37E−09	3.82E−09	1.45E−09	1.18E−14	1.45E−09
224-42-0	Dibenz[a,j]acridine	1.69E−05	0.00E+00	1.69E−05	1.69E−05	0.00E+00	1.69E−05
191-30-0	Dibenzo(a,l)pyrene	1.69E−05	0.00E+00	1.69E−05	1.69E−05	0.00E+00	1.69E−05
192-65-4	Dibenzo[a,e]pyrene	1.69E−05	0.00E+00	1.69E−05	1.69E−05	0.00E+00	1.69E−05

Table A-2 Organic COPCs Emissions Estimate from the Direct Feed LAW Effluent Management Facility Vessel Vent Process (DVP) System

CAS #	COPC (Note 1)	Unabated Streams			Abated Streams		
		DEP15			DEP18		
		DVP System			DVP System		
		Vapor	Particulate	Total	Vapor	Particulate	Total
		g/sec	g/sec	g/sec	g/sec	g/sec	g/sec
189-64-0	Dibenzo[a,h]pyrene	1.69E−05	0.00E+00	1.69E−05	1.69E−05	0.00E+00	1.69E−05
189-55-9	Dibenzo[a,i]pyrene	1.69E−05	0.00E+00	1.69E−05	1.69E−05	0.00E+00	1.69E−05
75-71-8	Dichlorodifluoromethane	4.95E−10	0.00E+00	4.95E−10	4.95E−10	0.00E+00	4.95E−10
75-09-2	Methylenechloride	1.18E−07	4.31E−10	1.19E−07	1.18E−07	2.15E−15	1.18E−07
84-66-2	Diethylphthalate	1.69E−05	4.31E−10	1.69E−05	1.69E−05	2.15E−15	1.69E−05
84-74-2	Di-n-butylphthalate	3.40E−04	4.79E−09	3.40E−04	3.40E−04	2.39E−14	3.40E−04
117-84-0	Di-n-octylphthalate	5.49E−05	2.22E−08	5.49E−05	5.49E−05	1.11E−13	5.49E−05
100-41-4	Ethylbenzene	3.34E−10	0.00E+00	3.34E−10	3.34E−10	0.00E+00	3.34E−10
60-29-7	Ethyl ether	2.22E−08	0.00E+00	2.22E−08	2.22E−08	0.00E+00	2.22E−08
106-93-4	Ethylene dibromide	1.60E−10	0.00E+00	1.60E−10	1.60E−10	0.00E+00	1.60E−10
75-21-8	Ethylene oxide (Oxirane)	3.44E−08	0.00E+00	3.44E−08	3.44E−08	0.00E+00	3.44E−08
206-44-0	Fluoranthene	5.57E−05	1.06E−09	5.57E−05	5.57E−05	5.32E−15	5.57E−05
86-73-7	Fluorene	1.69E−05	4.31E−10	1.69E−05	1.69E−05	2.15E−15	1.69E−05
75-02-5	Fluoroethene (vinyl fluoride)	1.69E−05	0.00E+00	1.69E−05	1.69E−05	0.00E+00	1.69E−05
50-00-0	Formaldehyde	1.69E−05	0.00E+00	1.69E−05	1.69E−05	0.00E+00	1.69E−05
87-68-3	Hexachlorobutadiene	1.01E−07	0.00E+00	1.01E−07	1.01E−07	0.00E+00	1.01E−07
67-72-1	Hexachloroethane	2.36E−06	0.00E+00	2.36E−06	2.36E−06	0.00E+00	2.36E−06
628-73-9	Hexanenitrile	1.69E−05	0.00E+00	1.69E−05	1.69E−05	0.00E+00	1.69E−05
193-39-5	Indeno(1,2,3-cd)pyrene	1.69E−05	2.43E−09	1.69E−05	1.69E−05	1.21E−14	1.69E−05
67-56-1	Methyl alcohol	1.69E−05	0.00E+00	1.69E−05	1.69E−05	0.00E+00	1.69E−05
1634-04-4	tert-Butyl methyl ether	1.69E−05	0.00E+00	1.69E−05	1.69E−05	0.00E+00	1.69E−05
122-39-4	Diphenyl amine	1.79E−08	0.00E+00	1.79E−08	1.79E−08	0.00E+00	1.79E−08

Table A-2 Organic COPCs Emissions Estimate from the Direct Feed LAW Effluent Management Facility Vessel Vent Process (DVP) System

CAS #	COPC (Note 1)	Unabated Streams			Abated Streams		
		DEP15			DEP18		
		DVP System			DVP System		
		Vapor	Particulate	Total	Vapor	Particulate	Total
		g/sec	g/sec	g/sec	g/sec	g/sec	g/sec
91-20-3	Naphthalene	5.29E−05	4.31E−10	5.29E−05	5.29E−05	2.15E−15	5.29E−05
109-74-0	Butanenitrile	1.69E−05	0.00E+00	1.69E−05	1.69E−05	0.00E+00	1.69E−05
71-36-3	1-Butanol	4.77E−07	0.00E+00	4.77E−07	4.77E−07	0.00E+00	4.77E−07
110-54-3	Hexane	3.12E−08	0.00E+00	3.12E−08	3.12E−08	0.00E+00	3.12E−08
98-95-3	Nitrobenzene	1.30E−07	4.31E−10	1.31E−07	1.30E−07	2.15E−15	1.30E−07
621-64-7	N-Nitroso-di-n-propylamine	4.89E−07	0.00E+00	4.89E−07	4.89E−07	0.00E+00	4.89E−07
10595-95-6	N-Nitrosomethylethylamine	1.69E−05	0.00E+00	1.69E−05	1.69E−05	0.00E+00	1.69E−05
59-89-2	Morpholine, 4-Nitroso-	1.21E−08	0.00E+00	1.21E−08	1.21E−08	0.00E+00	1.21E−08
62-75-9	N-Nitrosodimethylamine	2.10E−09	0.00E+00	2.10E−09	2.10E−09	0.00E+00	2.10E−09
87-86-5	Pentachlorophenol	9.76E−08	2.27E−13	9.76E−08	9.76E−08	1.14E−18	9.76E−08
110-59-8	Pentanenitrile	1.69E−05	0.00E+00	1.69E−05	1.69E−05	0.00E+00	1.69E−05
85-01-8	Phenanthrene	1.69E−05	0.00E+00	1.69E−05	1.69E−05	0.00E+00	1.69E−05
108-95-2	Phenol	1.34E−07	4.31E−10	1.34E−07	1.34E−07	2.15E−15	1.34E−07
100-21-0	Phthalic acid	1.69E−05	0.00E+00	1.69E−05	1.69E−05	0.00E+00	1.69E−05
100-02-7	4-Nitrophenol	4.92E−05	1.17E−10	4.92E−05	4.92E−05	5.85E−16	4.92E−05
1336-36-3	Aroclors (Total PCB)	2.59E−05	0.00E+00	2.59E−05	2.59E−05	0.00E+00	2.59E−05
107-12-0	Propionitrile	5.42E−08	0.00E+00	5.42E−08	5.42E−08	0.00E+00	5.42E−08
129-00-0	Pyrene	5.56E−05	7.95E−10	5.56E−05	5.56E−05	3.98E−15	5.56E−05
110-86-1	Pyridine	1.39E−07	0.00E+00	1.39E−07	1.39E−07	0.00E+00	1.39E−07
100-42-5	Styrene	1.60E−10	4.31E−10	5.91E−10	1.60E−10	2.15E−15	1.60E−10
108-88-3	Toluene	8.34E−10	4.31E−10	1.26E−09	8.34E−10	2.15E−15	8.34E−10
10061-02-6	trans-1,3-Dichloropropene	6.17E−10	0.00E+00	6.17E−10	6.17E−10	0.00E+00	6.17E−10

Table A-2 Organic COPCs Emissions Estimate from the Direct Feed LAW Effluent Management Facility Vessel Vent Process (DVP) System

CAS #	COPC (Note 1)	Unabated Streams			Abated Streams		
		DEP15			DEP18		
		DVP System			DVP System		
		Vapor	Particulate	Total	Vapor	Particulate	Total
		g/sec	g/sec	g/sec	g/sec	g/sec	g/sec
126-73-8	Tributyl phosphate	1.68E−05	1.57E−10	1.68E−05	1.68E−05	7.84E−16	1.68E−05
27154-33-2	Trichlorofluoroethane	1.69E−05	0.00E+00	1.69E−05	1.69E−05	0.00E+00	1.69E−05
75-69-4	Trichlorofluoromethane	4.86E−10	0.00E+00	4.86E−10	4.86E−10	0.00E+00	4.86E−10
75-50-3	Trimethylamine	1.69E−05	0.00E+00	1.69E−05	1.69E−05	0.00E+00	1.69E−05
1330-20-7	Xylenes (total)	5.71E−08	4.31E−10	5.75E−08	5.71E−08	2.15E−15	5.71E−08
75-15-0	Carbon Disulfide	2.92E−07	4.31E−10	2.93E−07	2.92E−07	2.15E−15	2.92E−07
100-25-4	1,4-Dinitrobenzene	0.00E+00	2.44E−12	2.44E−12	0.00E+00	1.22E−17	1.22E−17
100-44-7	Benzyl chloride	0.00E+00	4.31E−10	4.31E−10	0.00E+00	2.15E−15	2.15E−15
100-47-0	Benzonitrile	0.00E+00	4.31E−10	4.31E−10	0.00E+00	2.15E−15	2.15E−15
100-51-6	Benzyl alcohol	0.00E+00	4.31E−10	4.31E−10	0.00E+00	2.15E−15	2.15E−15
100-52-7	Benzaldehyde	0.00E+00	4.31E−10	4.31E−10	0.00E+00	2.15E−15	2.15E−15
101-77-9	4,4-Methylenedianiline	0.00E+00	4.31E−10	4.31E−10	0.00E+00	2.15E−15	2.15E−15
103-33-3	Azobenzene	0.00E+00	4.31E−10	4.31E−10	0.00E+00	2.15E−15	2.15E−15
103-65-1	n-Propyl benzene (Isocumene)	0.00E+00	4.31E−10	4.31E−10	0.00E+00	2.15E−15	2.15E−15
104-51-8	n-Butylbenzene	0.00E+00	4.31E−10	4.31E−10	0.00E+00	2.15E−15	2.15E−15
106-43-4	4-Chlorotoluene (p-Tolyl chloride)	0.00E+00	4.31E−10	4.31E−10	0.00E+00	2.15E−15	2.15E−15
106-44-5	p-Cresol (4-methyl phenol)	0.00E+00	4.31E−10	4.31E−10	0.00E+00	2.15E−15	2.15E−15
106-47-8	p-Chloroaniline	0.00E+00	4.31E−10	4.31E−10	0.00E+00	2.15E−15	2.15E−15
106-49-0	p-Toluidine	0.00E+00	4.31E−10	4.31E−10	0.00E+00	2.15E−15	2.15E−15
106-51-4	Quinone	0.00E+00	4.31E−10	4.31E−10	0.00E+00	2.15E−15	2.15E−15
106-89-8	Epichlorohydrin (1-chloro-2,3 epoxypropane)	0.00E+00	4.31E−10	4.31E−10	0.00E+00	2.15E−15	2.15E−15

Table A-2 Organic COPCs Emissions Estimate from the Direct Feed LAW Effluent Management Facility Vessel Vent Process (DVP) System

CAS #	COPC (Note 1)	Unabated Streams			Abated Streams		
		DEP15			DEP18		
		DVP System			DVP System		
		Vapor	Particulate	Total	Vapor	Particulate	Total
		g/sec	g/sec	g/sec	g/sec	g/sec	g/sec
107-19-7	Propargyl alcohol	0.00E+00	4.31E−10	4.31E−10	0.00E+00	2.15E−15	2.15E−15
107-21-1	Ethylene glycol (1,2-ethanediol)	0.00E+00	4.31E−10	4.31E−10	0.00E+00	2.15E−15	2.15E−15
107-98-2	Propylene glycol monomethyl ether	0.00E+00	4.31E−10	4.31E−10	0.00E+00	2.15E−15	2.15E−15
108-60-1	bis (2-Chloroisopropyl)ether	0.00E+00	4.31E−10	4.31E−10	0.00E+00	2.15E−15	2.15E−15
108-67-8	1,3,5-Trimethylbenzene	0.00E+00	4.31E−10	4.31E−10	0.00E+00	2.15E−15	2.15E−15
108-86-1	Bromobenzene (Phenyl bromide)	0.00E+00	4.31E−10	4.31E−10	0.00E+00	2.15E−15	2.15E−15
108-87-2	Methylcyclohexane	0.00E+00	4.31E−10	4.31E−10	0.00E+00	2.15E−15	2.15E−15
109-75-1	3-Butenenitrile	0.00E+00	4.31E−10	4.31E−10	0.00E+00	2.15E−15	2.15E−15
109-77-3	Malononitrile	0.00E+00	4.31E−10	4.31E−10	0.00E+00	2.15E−15	2.15E−15
109-86-4	2-Methoxyethanol	0.00E+00	4.31E−10	4.31E−10	0.00E+00	2.15E−15	2.15E−15
109-99-9	Tetrahydrofuran	0.00E+00	4.31E−10	4.31E−10	0.00E+00	2.15E−15	2.15E−15
110-00-9	Furan	0.00E+00	4.31E−10	4.31E−10	0.00E+00	2.15E−15	2.15E−15
110-83-8	Cyclohexene	0.00E+00	4.31E−10	4.31E−10	0.00E+00	2.15E−15	2.15E−15
111-15-9	Ethylene glycol monoethyl ether acetate	0.00E+00	4.31E−10	4.31E−10	0.00E+00	2.15E−15	2.15E−15
111-44-4	Bis(2-chloroethyl)ether	0.00E+00	4.31E−10	4.31E−10	0.00E+00	2.15E−15	2.15E−15
111-65-9	n-Octane	0.00E+00	4.31E−10	4.31E−10	0.00E+00	2.15E−15	2.15E−15
111-84-2	n-Nonane	0.00E+00	4.31E−10	4.31E−10	0.00E+00	2.15E−15	2.15E−15
111-91-1	Bis(2-chloroethoxy)methane	0.00E+00	7.32E−12	7.32E−12	0.00E+00	3.66E−17	3.66E−17
1120-21-4	Undecane	0.00E+00	4.31E−10	4.31E−10	0.00E+00	2.15E−15	2.15E−15
1120-71-4	1,3-Propane sultone	0.00E+00	4.31E−10	4.31E−10	0.00E+00	2.15E−15	2.15E−15
112-30-1	1-Decanol	0.00E+00	4.31E−10	4.31E−10	0.00E+00	2.15E−15	2.15E−15
112-31-2	Decanal	0.00E+00	4.31E−10	4.31E−10	0.00E+00	2.15E−15	2.15E−15

Table A-2 Organic COPCs Emissions Estimate from the Direct Feed LAW Effluent Management Facility Vessel Vent Process (DVP) System

CAS #	COPC (Note 1)	Unabated Streams			Abated Streams		
		DEP15			DEP18		
		DVP System			DVP System		
		Vapor	Particulate	Total	Vapor	Particulate	Total
		g/sec	g/sec	g/sec	g/sec	g/sec	g/sec
112-40-3	Dodecane	0.00E+00	4.31E−10	4.31E−10	0.00E+00	2.15E−15	2.15E−15
118-74-1	Hexachlorobenzene	0.00E+00	4.31E−10	4.31E−10	0.00E+00	2.15E−15	2.15E−15
119-90-4	3,3'-Dimethoxybenzidine	0.00E+00	3.41E−10	3.41E−10	0.00E+00	1.71E−15	1.71E−15
122-66-7	1,2-Diphenylhydrazine	0.00E+00	4.31E−10	4.31E−10	0.00E+00	2.15E−15	2.15E−15
123-33-1	Maleic hydrazide	0.00E+00	4.31E−10	4.31E−10	0.00E+00	2.15E−15	2.15E−15
123-38-6	Propionaldehyde	0.00E+00	4.31E−10	4.31E−10	0.00E+00	2.15E−15	2.15E−15
124-18-5	Decane	0.00E+00	4.31E−10	4.31E−10	0.00E+00	2.15E−15	2.15E−15
124-48-1	Chlorodibromomethane	0.00E+00	4.31E−10	4.31E−10	0.00E+00	2.15E−15	2.15E−15
131-11-3	Dimethyl Phthalate	0.00E+00	4.31E−10	4.31E−10	0.00E+00	2.15E−15	2.15E−15
131-89-5	2-Cycloyhexyl-4,6-dinitrophenol	0.00E+00	1.52E−09	1.52E−09	0.00E+00	7.62E−15	7.62E−15
132-64-9	Dibenzofuran	0.00E+00	8.25E−13	8.25E−13	0.00E+00	4.13E−18	4.13E−18
133-06-2	Captan	0.00E+00	4.31E−10	4.31E−10	0.00E+00	2.15E−15	2.15E−15
135-98-8	sec-Butylbenzene	0.00E+00	4.31E−10	4.31E−10	0.00E+00	2.15E−15	2.15E−15
145-73-3	Endothall	0.00E+00	2.43E−09	2.43E−09	0.00E+00	1.21E−14	1.21E−14
156-59-2	cis-1,2-Dichloroethene	0.00E+00	4.31E−10	4.31E−10	0.00E+00	2.15E−15	2.15E−15
1746-01-6	2,3,7,8-Tetrachlorodibenzo(p)dioxin (TCDD)	0.00E+00	5.65E−17	5.65E−17	0.00E+00	2.82E−22	2.82E−22
192-97-2	Benzo(e)pyrene	0.00E+00	2.61E−10	2.61E−10	0.00E+00	1.30E−15	1.30E−15
19408-74-3	1,2,3,7,8,9-Hexachlorodibenzo(p)dioxin	0.00E+00	4.44E−16	4.44E−16	0.00E+00	2.22E−21	2.22E−21
205-82-3	Benzo[j]fluoranthene	0.00E+00	1.00E−09	1.00E−09	0.00E+00	5.00E−15	5.00E−15
205-99-2	Benzo(b)fluoranthene	0.00E+00	8.29E−11	8.29E−11	0.00E+00	4.15E−16	4.15E−16
207-08-9	Benzo(k)fluoranthene	0.00E+00	1.80E−09	1.80E−09	0.00E+00	9.02E−15	9.02E−15

Table A-2 Organic COPCs Emissions Estimate from the Direct Feed LAW Effluent Management Facility Vessel Vent Process (DVP) System

CAS #	COPC (Note 1)	Unabated Streams			Abated Streams		
		DEP15			DEP18		
		DVP System			DVP System		
		Vapor	Particulate	Total	Vapor	Particulate	Total
		g/sec	g/sec	g/sec	g/sec	g/sec	g/sec
218-01-9	Chrysene	0.00E+00	6.78E−10	6.78E−10	0.00E+00	3.39E−15	3.39E−15
2245-38-7	2,3,5-Trimethylnaphthalene	0.00E+00	4.31E−10	4.31E−10	0.00E+00	2.15E−15	2.15E−15
23950-58-5	Pronamide	0.00E+00	1.24E−10	1.24E−10	0.00E+00	6.22E−16	6.22E−16
31508-00-6	2,3',4,4',5-Pentachlorobiphenyl (PCB 118)	0.00E+00	7.13E−14	7.13E−14	0.00E+00	3.56E−19	3.56E−19
319-84-6	alpha-BHC	0.00E+00	4.31E−10	4.31E−10	0.00E+00	2.15E−15	2.15E−15
319-85-7	beta-BHC	0.00E+00	2.44E−12	2.44E−12	0.00E+00	1.22E−17	1.22E−17
32598-13-3	3,3',4,4'-Tetrachlorobiphenyl (PCB 77)	0.00E+00	5.98E−15	5.98E−15	0.00E+00	2.99E−20	2.99E−20
32598-14-4	2,3,3',4,4'-Pentachlorobiphenyl (PCB 105)	0.00E+00	3.04E−15	3.04E−15	0.00E+00	1.52E−20	1.52E−20
3268-87-9	Octachlorodibenzo(p)dioxin	0.00E+00	8.00E−11	8.00E−11	0.00E+00	4.00E−16	4.00E−16
32774-16-6	3,3',4,4',5,5'-Hexachlorobiphenyl (PCB 169)	0.00E+00	4.06E−17	4.06E−17	0.00E+00	2.03E−22	2.03E−22
35822-46-9	1,2,3,4,6,7,8-Heptachlorodibenzo(p)dioxin	0.00E+00	7.83E−12	7.83E−12	0.00E+00	3.91E−17	3.91E−17
38380-08-4	2,3,3',4,4',5-Hexachlorobiphenyl (PCB 156)	0.00E+00	1.94E−15	1.94E−15	0.00E+00	9.68E−21	9.68E−21
39001-02-0	Octachlorodibenzofuran	0.00E+00	3.41E−11	3.41E−11	0.00E+00	1.70E−16	1.70E−16
39227-28-6	1,2,3,4,7,8-Hexachlorodibenzo(p)dioxin	0.00E+00	1.91E−16	1.91E−16	0.00E+00	9.55E−22	9.55E−22
39635-31-9	2,3,3',4,4',5,5'-Heptachlorobiphenyl (PCB 189)	0.00E+00	5.96E−16	5.96E−16	0.00E+00	2.98E−21	2.98E−21
40321-76-4	1,2,3,7,8-Pentachlorodibenzo(p)dioxin	0.00E+00	1.25E−16	1.25E−16	0.00E+00	6.23E−22	6.23E−22
4170-30-3	Crotonaldehyde (Propylene aldehyde)	0.00E+00	4.31E−10	4.31E−10	0.00E+00	2.15E−15	2.15E−15
41851-50-7	Chlorocyclopentadiene	0.00E+00	4.31E−10	4.31E−10	0.00E+00	2.15E−15	2.15E−15
460-19-5	Cyanogen (oxalonitrile)	0.00E+00	4.31E−10	4.31E−10	0.00E+00	2.15E−15	2.15E−15
4786-20-3	2-Butenenitrile	0.00E+00	4.31E−10	4.31E−10	0.00E+00	2.15E−15	2.15E−15
506-68-3	Cyanogen bromide (bromocyanide)	0.00E+00	4.31E−10	4.31E−10	0.00E+00	2.15E−15	2.15E−15

Table A-2 Organic COPCs Emissions Estimate from the Direct Feed LAW Effluent Management Facility Vessel Vent Process (DVP) System

CAS #	COPC (Note 1)	Unabated Streams			Abated Streams		
		DEP15			DEP18		
		DVP System			DVP System		
		Vapor	Particulate	Total	Vapor	Particulate	Total
		g/sec	g/sec	g/sec	g/sec	g/sec	g/sec
506-77-4	Cyanogen chloride	0.00E+00	4.31E−10	4.31E−10	0.00E+00	2.15E−15	2.15E−15
510-15-6	Chlorobenzilate	0.00E+00	3.29E−10	3.29E−10	0.00E+00	1.65E−15	1.65E−15
51207-31-9	2,3,7,8-Tetrachlorodibenzofuran	0.00E+00	2.67E−11	2.67E−11	0.00E+00	1.34E−16	1.34E−16
51-28-5	2,4-Dinitrophenol	0.00E+00	4.31E−10	4.31E−10	0.00E+00	2.15E−15	2.15E−15
51-79-6	Ethyl carbamate (urethane)	0.00E+00	4.31E−10	4.31E−10	0.00E+00	2.15E−15	2.15E−15
52663-72-6	2,3',4,4',5,5'-Hexachlorobiphenyl (PCB 167)	0.00E+00	1.03E−15	1.03E−15	0.00E+00	5.13E−21	5.13E−21
528-29-0	1,2-Dinitrobenzene (o-Dinitrobenzene)	0.00E+00	2.44E−12	2.44E−12	0.00E+00	1.22E−17	1.22E−17
532-27-4	2-Chloroacetophenone	0.00E+00	4.31E−10	4.31E−10	0.00E+00	2.15E−15	2.15E−15
534-52-1	4,6-Dinitro-o-cresol	0.00E+00	4.31E−10	4.31E−10	0.00E+00	2.15E−15	2.15E−15
5385-75-1	Dibenzo(a,e)fluoranthene	0.00E+00	2.39E−09	2.39E−09	0.00E+00	1.20E−14	1.20E−14
540-59-0	1,2-Dichloroethene (total) (1,2-Dichloroethylene)	0.00E+00	4.31E−10	4.31E−10	0.00E+00	2.15E−15	2.15E−15
540-73-8	1,2-Dimethylhydrazine	0.00E+00	4.31E−10	4.31E−10	0.00E+00	2.15E−15	2.15E−15
540-84-1	2,2,4-Trimethylpentane	0.00E+00	4.31E−10	4.31E−10	0.00E+00	2.15E−15	2.15E−15
542-75-6	1,3-Dichloropropene	0.00E+00	4.31E−10	4.31E−10	0.00E+00	2.15E−15	2.15E−15
542-88-1	Bis(chloromethyl)ether	0.00E+00	4.31E−10	4.31E−10	0.00E+00	2.15E−15	2.15E−15
55673-89-7	1,2,3,4,7,8,9-Heptachlorodibenzofuran	0.00E+00	1.53E−16	1.53E−16	0.00E+00	7.63E−22	7.63E−22
56-55-3	Benzo(a)anthracene	0.00E+00	1.29E−09	1.29E−09	0.00E+00	6.45E−15	6.45E−15
57117-31-4	2,3,4,7,8-Pentachlorodibenzofuran	0.00E+00	2.44E−11	2.44E−11	0.00E+00	1.22E−16	1.22E−16
57117-41-6	1,2,3,7,8-Pentachlorodibenzofuran	0.00E+00	6.67E−11	6.67E−11	0.00E+00	3.33E−16	3.33E−16
57117-44-9	1,2,3,6,7,8-Hexachlorodibenzofuran	0.00E+00	1.02E−11	1.02E−11	0.00E+00	5.09E−17	5.09E−17
57-24-9	Strychnine	0.00E+00	2.42E−09	2.42E−09	0.00E+00	1.21E−14	1.21E−14

Table A-2 Organic COPCs Emissions Estimate from the Direct Feed LAW Effluent Management Facility Vessel Vent Process (DVP) System

CAS #	COPC (Note 1)	Unabated Streams			Abated Streams		
		DEP15			DEP18		
		DVP System			DVP System		
		Vapor	Particulate	Total	Vapor	Particulate	Total
		g/sec	g/sec	g/sec	g/sec	g/sec	g/sec
57465-28-8	3,3',4,4',5-Pentachlorobiphenyl (PCB 126)	0.00E+00	1.35E−16	1.35E−16	0.00E+00	6.73E−22	6.73E−22
57653-85-7	1,2,3,6,7,8,-Hexachlorodibenzo(p)dioxin	0.00E+00	4.20E−16	4.20E−16	0.00E+00	2.10E−21	2.10E−21
57-74-9	Chlordane	0.00E+00	1.71E−11	1.71E−11	0.00E+00	8.54E−17	8.54E−17
581-42-0	2,6-Dimethylnaphthalene	0.00E+00	4.31E−10	4.31E−10	0.00E+00	2.15E−15	2.15E−15
584-84-9	2,4-Toluene diisocyanate	0.00E+00	4.31E−10	4.31E−10	0.00E+00	2.15E−15	2.15E−15
58-89-9	gamma-BHC (Lindane)	0.00E+00	4.31E−10	4.31E−10	0.00E+00	2.15E−15	2.15E−15
591-50-4	Benzene, iodo-	0.00E+00	4.31E−10	4.31E−10	0.00E+00	2.15E−15	2.15E−15
593-60-2	Bromoethene (Vinyl bromide)	0.00E+00	4.31E−10	4.31E−10	0.00E+00	2.15E−15	2.15E−15
60-11-7	Dimethyl aminoazobenzene	0.00E+00	1.12E−09	1.12E−09	0.00E+00	5.61E−15	5.61E−15
606-20-2	2,6-Dinitrotoluene	0.00E+00	4.31E−10	4.31E−10	0.00E+00	2.15E−15	2.15E−15
60851-34-5	2,3,4,6,7,8-Hexachlorodibenzofuran	0.00E+00	1.43E−16	1.43E−16	0.00E+00	7.14E−22	7.14E−22
608-93-5	Pentachlorobenzene	0.00E+00	4.31E−10	4.31E−10	0.00E+00	2.15E−15	2.15E−15
61626-71-9	Dichloropentadiene	0.00E+00	4.31E−10	4.31E−10	0.00E+00	2.15E−15	2.15E−15
624-83-9	Methyl isocyanate	0.00E+00	4.31E−10	4.31E−10	0.00E+00	2.15E−15	2.15E−15
62-50-0	Ethyl methanesulfonate	0.00E+00	4.31E−10	4.31E−10	0.00E+00	2.15E−15	2.15E−15
62-53-3	Aniline	0.00E+00	4.31E−10	4.31E−10	0.00E+00	2.15E−15	2.15E−15
64-18-6	Formic acid (methanoic acid)	0.00E+00	4.31E−10	4.31E−10	0.00E+00	2.15E−15	2.15E−15
65510-44-3	2',3,4,4',5-Pentachlorobiphenyl (PCB 123)	0.00E+00	9.52E−17	9.52E−17	0.00E+00	4.76E−22	4.76E−22
65-85-0	Benzoic acid	0.00E+00	4.31E−10	4.31E−10	0.00E+00	2.15E−15	2.15E−15
67562-39-4	1,2,3,4,6,7,8-Heptachlorodibenzofuran	0.00E+00	2.12E−16	2.12E−16	0.00E+00	1.06E−21	1.06E−21
69782-90-7	2,3,3',4,4',5'-Hexachlorobiphenyl (PCB 157)	0.00E+00	6.16E−16	6.16E−16	0.00E+00	3.08E−21	3.08E−21
70-30-4	Hexachlorophene	0.00E+00	2.42E−09	2.42E−09	0.00E+00	1.21E−14	1.21E−14

Table A-2 Organic COPCs Emissions Estimate from the Direct Feed LAW Effluent Management Facility Vessel Vent Process (DVP) System

CAS #	COPC (Note 1)	Unabated Streams			Abated Streams		
		DEP15			DEP18		
		DVP System			DVP System		
		Vapor	Particulate	Total	Vapor	Particulate	Total
		g/sec	g/sec	g/sec	g/sec	g/sec	g/sec
70362-50-4	3,4,4',5-Tetrachlorobiphenyl (PCB 81)	0.00E+00	7.25E−17	7.25E−17	0.00E+00	3.62E−22	3.62E−22
70648-26-9	1,2,3,4,7,8-Hexachlorodibenzofuran	0.00E+00	4.09E−11	4.09E−11	0.00E+00	2.04E−16	2.04E−16
72-43-5	Methoxychlor	0.00E+00	3.63E−10	3.63E−10	0.00E+00	1.82E−15	1.82E−15
72918-21-9	1,2,3,7,8,9-Hexachlorodibenzofuran	0.00E+00	3.48E−13	3.48E−13	0.00E+00	1.74E−18	1.74E−18
74472-37-0	2,3,4,4',5-Pentachlorobiphenyl (PCB 114)	0.00E+00	1.22E−16	1.22E−16	0.00E+00	6.12E−22	6.12E−22
74-88-4	Iodomethane	0.00E+00	4.31E−10	4.31E−10	0.00E+00	2.15E−15	2.15E−15
74-95-3	Methylene bromide	0.00E+00	4.31E−10	4.31E−10	0.00E+00	2.15E−15	2.15E−15
74-97-5	Bromochloromethane	0.00E+00	4.31E−10	4.31E−10	0.00E+00	2.15E−15	2.15E−15
75-25-2	Bromoform	0.00E+00	4.31E−10	4.31E−10	0.00E+00	2.15E−15	2.15E−15
75-29-6	2-Chloropropane	0.00E+00	4.31E−10	4.31E−10	0.00E+00	2.15E−15	2.15E−15
75-44-5	Phosgene (hydrogen phosphide)	0.00E+00	4.31E−10	4.31E−10	0.00E+00	2.15E−15	2.15E−15
76-01-7	Pentachloroethane	0.00E+00	4.31E−10	4.31E−10	0.00E+00	2.15E−15	2.15E−15
764-41-0	1,4-Dichloro-2-butene	0.00E+00	4.31E−10	4.31E−10	0.00E+00	2.15E−15	2.15E−15
76-44-8	Heptachlor	0.00E+00	4.31E−10	4.31E−10	0.00E+00	2.15E−15	2.15E−15
765-34-4	Glycidylaldehyde	0.00E+00	4.31E−10	4.31E−10	0.00E+00	2.15E−15	2.15E−15
77-47-4	Hexachlorocyclopentadiene	0.00E+00	4.31E−10	4.31E−10	0.00E+00	2.15E−15	2.15E−15
77-78-1	Dimethyl sulfate	0.00E+00	4.31E−10	4.31E−10	0.00E+00	2.15E−15	2.15E−15
80-62-6	Methyl methacrylate	0.00E+00	4.31E−10	4.31E−10	0.00E+00	2.15E−15	2.15E−15
822-06-0	Hexamethylene-1,5-diisocyanate	0.00E+00	4.31E−10	4.31E−10	0.00E+00	2.15E−15	2.15E−15
823-40-5	Toluene-2,6-diamine	0.00E+00	4.31E−10	4.31E−10	0.00E+00	2.15E−15	2.15E−15
82-68-8	Pentachloronitrobenzene (PCNB)	0.00E+00	4.31E−10	4.31E−10	0.00E+00	2.15E−15	2.15E−15
832-69-9	1-Methylphenanthrene	0.00E+00	7.07E−11	7.07E−11	0.00E+00	3.54E−16	3.54E−16

Table A-2 Organic COPCs Emissions Estimate from the Direct Feed LAW Effluent Management Facility Vessel Vent Process (DVP) System

CAS #	COPC (Note 1)	Unabated Streams			Abated Streams		
		DEP15			DEP18		
		DVP System			DVP System		
		Vapor	Particulate	Total	Vapor	Particulate	Total
		g/sec	g/sec	g/sec	g/sec	g/sec	g/sec
85-44-9	Phthalic anhydride (1,2-benzenedicarboxylic anhydride)	0.00E+00	4.31E−10	4.31E−10	0.00E+00	2.15E−15	2.15E−15
87-61-6	1,2,3-Trichlorobenzene	0.00E+00	4.31E−10	4.31E−10	0.00E+00	2.15E−15	2.15E−15
88-74-4	o-Nitroaniline (2-nitroaniline)	0.00E+00	4.31E−10	4.31E−10	0.00E+00	2.15E−15	2.15E−15
90-04-0	o-Anisidine	0.00E+00	4.31E−10	4.31E−10	0.00E+00	2.15E−15	2.15E−15
90-12-0	1-Methylnaphthalene	0.00E+00	4.31E−10	4.31E−10	0.00E+00	2.15E−15	2.15E−15
91-22-5	Quinoline	0.00E+00	4.31E−10	4.31E−10	0.00E+00	2.15E−15	2.15E−15
91-57-6	2-Methylnaphthalene	0.00E+00	4.31E−10	4.31E−10	0.00E+00	2.15E−15	2.15E−15
91-94-1	3,3'-Dichlorobenzidine	0.00E+00	1.26E−09	1.26E−09	0.00E+00	6.29E−15	6.29E−15
924-16-3	N-Nitroso-di-n-Buetylamine	0.00E+00	4.31E−10	4.31E−10	0.00E+00	2.15E−15	2.15E−15
94-59-7	Safrole (5-(2-Propenyl)-1,3-benzodioxole)	0.00E+00	4.31E−10	4.31E−10	0.00E+00	2.15E−15	2.15E−15
94-75-7	2,4-D	0.00E+00	1.24E−10	1.24E−10	0.00E+00	6.22E−16	6.22E−16
95-49-8	o-Chlorotoluene	0.00E+00	4.31E−10	4.31E−10	0.00E+00	2.15E−15	2.15E−15
95-53-4	o-Toluidine	0.00E+00	4.31E−10	4.31E−10	0.00E+00	2.15E−15	2.15E−15
95-63-6	1,2,4-Trimethyl benzene	0.00E+00	4.31E−10	4.31E−10	0.00E+00	2.15E−15	2.15E−15
95-94-3	1,2,4,5-Tetrachlorobenzene	0.00E+00	4.31E−10	4.31E−10	0.00E+00	2.15E−15	2.15E−15
96-12-8	1,2-Dibromo-3-chloropropane	0.00E+00	4.31E−10	4.31E−10	0.00E+00	2.15E−15	2.15E−15
96-18-4	1,2,3-Trichloropropane	0.00E+00	4.31E−10	4.31E−10	0.00E+00	2.15E−15	2.15E−15
96-45-7	Ethylene thiourea	0.00E+00	4.31E−10	4.31E−10	0.00E+00	2.15E−15	2.15E−15
97-63-2	Ethyl methacrylate	0.00E+00	4.31E−10	4.31E−10	0.00E+00	2.15E−15	2.15E−15
98-01-1	Furfural	0.00E+00	4.31E−10	4.31E−10	0.00E+00	2.15E−15	2.15E−15
98-06-6	tert-Butyl benzene	0.00E+00	4.31E−10	4.31E−10	0.00E+00	2.15E−15	2.15E−15

Table A-2 Organic COPCs Emissions Estimate from the Direct Feed LAW Effluent Management Facility Vessel Vent Process (DVP) System

CAS #	COPC (Note 1)	Unabated Streams			Abated Streams		
		DEP15			DEP18		
		DVP System			DVP System		
		Vapor	Particulate	Total	Vapor	Particulate	Total
		g/sec	g/sec	g/sec	g/sec	g/sec	g/sec
98-07-7	Benzotrichloride	0.00E+00	4.31E−10	4.31E−10	0.00E+00	2.15E−15	2.15E−15
98-83-9	Methyl styrene (mixed isomers)	0.00E+00	4.31E−10	4.31E−10	0.00E+00	2.15E−15	2.15E−15
99-35-4	1,3,5-Trinitrobenzene	0.00E+00	1.95E−11	1.95E−11	0.00E+00	9.76E−17	9.76E−17
99-65-0	1,3-Dinitrobenzene	0.00E+00	4.31E−10	4.31E−10	0.00E+00	2.15E−15	2.15E−15
99-87-6	p-Cymene	0.00E+00	4.31E−10	4.31E−10	0.00E+00	2.15E−15	2.15E−15
105-67-9	2,4-Dimethylphenol	0.00E+00	4.31E−10	4.31E−10	0.00E+00	2.15E−15	2.15E−15
	TOTAL	**2.33E−03**	**1.32E−07**	**2.33E−03**	**2.33E−03**	**6.61E−13**	**2.33E−03**

Source: 24590-BOF-M4C-DEP-00001

Note 1: Emissions rates for organic COPCs reported in Table A-2 represent the combined total of feed organic and PIC (product of incomplete combustion) COPCs reported in 24590-BOF-M4C-DEP-00001, Table 8-4 and Table 8-5

Table A-3 Effluent Management Facility Emissions Exceeding De Minimis Quantities

Pollutant	CAS #	Averaging Period	Unabated Emission Rate (lb/averaging period)	De Minimis (lb/averaging period)
Organics				
3-Methylcholanthrene	56-49-5	Annual	1.17E+00	1.53E−03
4,4-DDE	72-55-9	Annual	1.17E+00	9.88E−02
5-Methylchrysene	3697-24-3	Annual	1.17E+00	8.72E−03
5-Nitroacenaphthene	602-87-9	Annual	1.17E+00	2.59E−01
Acetamide	60-35-5	Annual	1.17E+00	4.80E−01
Bis(2-ethylhexyl)phthalate	117-81-7	Annual	1.17E+00	4.00E−01
Bromodichloromethane	75-27-4	Annual	1.17E+00	2.59E−01
Dibenz[a,h]acridine	226-36-8	Annual	1.17E+00	8.72E−02
Dibenz[a,j]acridine	224-42-0	Annual	1.17E+00	8.72E−02
Dibenzo(a,l)pyrene	191-30-0	Annual	1.17E+00	8.72E−04
Dibenzo[a,e]pyrene	192-65-4	Annual	1.17E+00	8.72E−03
Dibenzo[a,h]pyrene	189-64-0	Annual	1.17E+00	8.72E−04
Dibenzo[a,i]pyrene	189-55-9	Annual	1.17E+00	8.72E−04
Indeno(1,2,3-cd)pyrene	193-39-5	Annual	1.17E+00	8.72E−02
Naphthalene	91-20-3	Annual	3.68E+00	2.82E−01
N-Nitroso-di-n-propylamine	621-64-7	Annual	3.40E−02	4.80E−03
N-Nitrosomethylethylamine	10595-95-6	Annual	1.17E+00	1.53E−03
Aroclors (Total PCB)	1336-36-3	Annual	1.80E+00	1.68E−02
2,3,4,7,8-Pentachlorodibenzofuran	57117-31-4	Annual	1.70E−06	5.05E−07
1,2,3,4,7,8-Hexachlorodibenzofuran	70648-26-9	Annual	2.84E−06	2.52E−06
Inorganics				
$(CH_3)_2Hg$ (Dimethyl Mercury)	593-74-8	24-hr	1.01E−04	1.00E−99
Cd	7440-43-9	Annual	2.82E−02	2.28E−03
NH_3	7664-41-7	24-hr	1.92E+01	4.65E−01
Cr (VI) [(1)]	18540-29-9	Annual	1.00E+00	6.40E−05

Note 1: Conservatively assuming all chromium (CAS # 7440-47-3) emitted as more harmful chromium(VI) form.