PART III, OPERATING UNIT GROUP 8
222-S DANGEROUS & MIXED WASTE TREATMENT, STORAGE AND DISPOSAL UNIT
ADDENDUM C

DRAFT

This page intentionally left blank.

DRAFT

PART III, OPERATING UNIT GROUP 8
222-S DANGEROUS & MIXED WASTE TREATMENT, STORAGE AND DISPOSAL UNIT
ADDENDUM C

Contents

C PROCESS INFORMATION 1
C.1 Storage and Treatment 1
C.1.1 Container Storage 2
C.1.2 Tank Treatment and Storage 2
C.2 Containers 3
C.2.1 Container Management 3
C.2.2 Container Management Practices 4
C.2.3 Labeling System 7
C.2.4 Containment Requirements for Storing Containers 8
C.2.5 Prevention of Reaction of Ignitable, Reactive, and Incompatible Wastes in Containers 10
C.3 219-S Tank System 11
C.3.1 Design, Installation, and Assessment of Tank System 13
C.3.2 Secondary Containment Requirements and Release Detection for Tank Systems 17
C.3.3 Variances from Secondary Containment Requirements 18
C.3.4 Tank Management Practices 19
C.3.5 Labels or Signs 22
C.3.6 Management of Ignitable or Reactive Waste in Tank Systems 22
C.3.7 Management of Incompatible Waste in Tank Systems 22
C.4 Air Emissions Control 22
C.4.1 Demonstrating Compliance with Subpart CC Standards 23

Tables and Figures

Figure C.1 General Layout of Storage in the 222-S DMWSA. 24
Figure C.2 General Layout of Room 2-B. 25
Figure C.3 General Layout of Room 4-E. 26
Figure C.4 Typical Routing for the 219-S Tank System and Associated Systems 27
Figure C.5. 222-S Complex Treatment, Storage, and Disposal Unit Configuration 28
Table C.1 Engineering Drawings from Appendix 4A in the Part B Permit Application 29
Table C.2 Listing of 219-S Tank System Ancillary Equipment. 30
Table C.2 Listing of Ancillary Equipment (Continued). 32
Table C.3 Typical Equipment Used in Containerizing Waste for Storage. 33

DRAFT

This page intentionally left blank.

DRAFT

C PROCESS INFORMATION

This chapter discusses the processes and equipment used for treatment and storage of dangerous and mixed waste at the 222-S Operating Unit Group. The 222-S Operating Unit Group can receive, package, repackage, sample, treat, and store dangerous and/or mixed waste from onsite generating units and/or offsite generators (Addendum B). All incoming dangerous and/or mixed waste received at the 222-S Operating Unit Group is managed in accordance with conditions of the Hanford Facility Dangerous Waste Permit.

The following wastes may be managed at the 222-S Operating Unit Group: dangerous or mixed waste that is generated from processes at the Hanford site, or waste that is specifically identified in Section II, paragraph 8 of the Settlement Agreement re: Washington v. Bodman, Civil No. 2:30-cv-05018-AAM, January 6, 2006. No other wastes may be managed at the 222-S unless authorized via a permit modification decision pursuant to Permit Condition I.C.3. Requests for Permit modifications must be accompanied by an evaluation adequate for Ecology to comply with SEPA.

A discussion of run-off and run-on control systems also is presented. All containers of dangerous and/or mixed waste are stored within the locations identified in Figure C.1 through Figure C.3 unless the containers either are being accepted or prepared for transfer from the 222-S Operating Unit Group to another onsite TSD unit, offsite TSD facility, or an appropriately authorized facility. In these cases, containers of dangerous and/or mixed waste can be stored temporarily within the 222-S Operating Unit Group boundary. Also, waste maybe stored in the outdoor storage area if required by other disciplines (e.g., fire protection, etc). Sampling, verification, and repackaging could be conducted at the 222-S Operating Unit Group.

Note that although dangerous waste management units in the 222-S Operating Unit Group (Section C.1) are part of the 222-S Laboratory Complex (see the Permit for general description), the overall 222-S Laboratory Complex is not subject to this permit. Therefore the areas managing dangerous and/or mixed waste that are within the 222-S Laboratory Complex but outside the 222-S Operating Unit Group boundary do so pursuant to the generator requirements [WAC 173-303-200]. These areas that are not subject to this permit but may manage or generate dangerous and/or mixed waste include the 222-S Laboratory, 222-SA Laboratory, 90-day accumulation areas, and satellite accumulation areas.

Areas within the boundary of the 222-S Operating Unit Group that do not manage dangerous and/or mixed waste include specific sections of the 219-S Waste Handling Facility (planning room, change room, and buffer area room) and the southern portion of Room 2-B. These areas are not subject to this permit.

Where information regarding treatment, management, and disposal of the radioactive source, byproduct material, and/or special nuclear components of mixed waste (as defined by the *Atomic Energy Act of 1954*, as amended) is incorporated into this document, it is provided for information purposes only. The information is not incorporated into this document for the purpose of regulating the radiation hazards of such components under the authority of this permit or Chapter 70.105, “Hazardous waste management,” of the Revised Code of Washington and its implementing regulations.

C.1 Storage and Treatment

The 222-S Operating Unit Group consists of the following four dangerous waste management units used for the treatment and storage of solid and/or liquid dangerous and/or mixed waste:

- 222-S Dangerous and Mixed Waste Storage Area (DMWSA)—Container storage of solid and/or liquid dangerous and/or mixed waste (Figure C.1).
- Room 2-B storage area (northern portion of Room 2-B)—Container storage of solid and/or liquid dangerous and/or mixed waste (Figure C.2).
- Room 4-E—Container storage of solid and/or liquid dangerous and/or mixed waste (Figure C.3).

DRAFT

- 219-S Waste Handling Facility—Tank system for treatment and storage of liquid dangerous and/or mixed waste (Figure C.4).

Dangerous waste management units in the 222-S Operating Unit Group provide treatment and storage areas for solid and/or liquid dangerous and/or mixed waste in support of the 222-S Laboratory Complex, Hanford contractor, and offsite missions. Selected engineering drawings for the 222-S Operating Unit Group are listed in Table C.1.

C.1.1 Container Storage

The container storage area in Room 2-B (northern portion of Room 2-B) provides container storage of solid and/or liquid mixed waste and is isolated from the remainder of the room with an accordion gate with physical controls. Access to the container storage dangerous waste management unit portion of the room is controlled and granted by facility management. The remainder of Room 2-B (the southern portion of Room 2-B) is dedicated to sample storage and other analytical processes. The maximum permitted storage capacity in Room 2-B is 2,500 liters. This permitted capacity of storage is based on the space available for container storage, including double-stacking, while maintaining a minimum of 76-centimeter aisle spacing [WAC 173-303-630(5)] and safe emergency egress. Figure C.2 shows a typical container configuration in Room 2-B.

Room 4-E provides container storage of solid and/or liquid mixed waste. The maximum permitted storage capacity in Room 4-E is 1,450 liters. This permitted storage capacity is based on the number of storage cabinets and drums. Drum storage is also limited by the aisle spacing requirement of 76-centimeters. The size and configuration of Room 4-E could allow for more storage capacity, but the quantities will be controlled to the permitted storage capacity. Figure C.3 shows a typical container configuration in Room 4-E.

The 222-S DMWSA is located on the north side of the 222-S Laboratory and consists of two metal storage structures that have been placed on an elevated platform. Each structure is divided into two cells (four total). The maximum process design capacity for container storage in the 222-S DMWSA (Figure C.1) is 24,520 liters. This capacity is based on the available storage area of the DMWSA, allowing for double-stacking of containers and providing a minimum of 76-centimeter aisle spacing [WAC 173-303-630(5)(c)]. Each of the four cells has secondary containment in compliance with WAC 173-303-630(7). If additional segregation is required, containers are stored on separate secondary containment devices. Details on container management and the containment devices are provided in Section C.2.

DOT compliant containers are not required for storage and treatment within 222-S Operating Unit Group.

C.1.2 Tank Treatment and Storage

The 219-S Waste Handling Facility dangerous waste management unit, located northeast of the 222-S Laboratory, includes an operating gallery, sample gallery, and a tank system. The 219-S Tank System contains four waste tanks (Tanks 101, 102, 103, and 104), associated ancillary equipment (Table C.2), and secondary containment vaults. The process design capacity and maximum operating capacity of three tanks is as follows: Tank 101 (15,140 liters), Tank 102 (15,140 liters), and Tank 104 (7,192 liters). The maximum process design capacity for tank storage is 37,472 liters (Part A Form). Tank 103, designed with 6,056 liter capacity, has been pumped, rinsed, disconnected, blanked, and is out of service (Figure C.4) (Addendum H).

This tank system includes the piping from the point of the pipe origin inside the 222-S Laboratory through the 219-S Tank System and associated piping to the exterior wall of the

219-S Tank System vault connecting to the waste lines associated with waste transfer to the tank farms.

Tanks 101 and 102 were installed when the facility was constructed in 1951. Tank 104 was installed and placed into service in 1996. The integrity assessments for the 219-S Tank System was performed as

required by WAC 173-303-640(2) and have been certified by an independent qualified registered professional engineer as required by WAC 173-303-810(13)(a). The tanks are located in a below-ground concrete vault that has been upgraded with stainless-steel liners to comply with secondary containment requirements of WAC-173-303-640(4). Refer to Section C.3 for additional details of the 219-S Tank System.

Liquid mixed waste that meets the 222-S waste acceptance criteria (see Addendum B) for the 219-S Tank System is transferred to the tank system. Introduction points to the 219-S Tank System are shown in Figure C.4. The liquid mixed waste transferred to the 219-S Tank System is normally stored and may be treated in Tanks 101 and 104 in preparation for transfer to the Double Shell Tank System(DST). Some or all of the waste in Tanks 101 and Tank 104 is transferred to Tank 102 for treatment to meet DST waste acceptance criteria. Once waste acceptance criteria are met, transfers from Tank 102 into the DST system (SY Farm) are planned.

Treatment of the waste may occur in Tank 101 or Tank 104 with the transfer of caustic (e.g. sodium hydroxide, calcium hydroxide, etc.) and/or sodium nitrite ($NaNO_2$) to the tanks utilizing the drain lines in Room 2-B or hot cells. Caustic may be added to Tank 101 and Tank 104. The addition of a known volume and concentration of caustic to the tanks provides a buffering solution for the waste entering the tanks from the laboratory for storage. This treatment helps to maintain a nonacid environment in the tank, reducing the chances of tank corrosion. No sampling of the waste in Tank 101 and Tank 104 is conducted to support this treatment since the treatment is not intended to render the waste to meet waste acceptance criteria. Treatment (DEACT) may also occur in Tank 101 and Tank 104 with controlled addition of water (Addendum B).

The liquid mixed waste is treated in Tank 102 with caustic or acid to adjust pH and with $NaNO_2$ to provide corrosion protection. The liquid mixed waste is transferred from Tank 102 of the 219-S Tank System to the DST System, another onsite TSD unit, offsite TSD facility, or an appropriately authorized facility. The interface point between the 219-S Tank System and the DST System is the 'cold face' or outside wall of the 219-S Tank System.

Transfers to another onsite TSD (other than the DST System), an offsite TSD facility, or an appropriately authorized facility, are nonroutine and require special planning and equipment. The 219-S Tank System would require reconfiguration for installation of a pump, jumpers, hoses, venting, and containment devices for transfer of the liquid mixed waste into a tanker truck or other containers. Any temporary system reconfigurations must meet appropriate sections of WAC 173-303-640 for integrity assessment and general operations. Transfers other than through the normal underground waste lines would only be considered if the underground line wastes transfer capability was not available or if the waste does not meet DST System acceptance criteria.

C.2 Containers

Waste is usually generated at 222-S Laboratory but could be received from onsite and offsite generators. All waste accepted for storage at 222-S Operating Unit Group from off-site TSD Units is packaged in approved containers including alternate packages as dictated by the size, shape, form of waste [49 CFR 173], or ALARA concerns. A test for free liquids is not performed unless specific instructions are received due to as low as reasonably achievable (ALARA) concerns. Waste received from other Hanford Site TSD Units or facilities and managed at the 222-S Operating Unit Group can be received in various forms and containers (Table C.3). Other types of containers are also accepted on a case-by-case basis after evaluation.

C.2.1 Container Management

Container management is discussed in the following sections.

DRAFT

C.2.1.1 Description of Containers

Waste is packaged and could be repackaged into various size containers made of approved materials (Table C.3). Waste stored in the 222-S Operating Unit Group are packaged in containers or other approved containers in a double-packaging system or as necessary to meet WAC 173-303-630(4). Liquid dangerous and/or mixed waste is contained in liquid tight bottles while stored in Rooms 4-E and the container storage portion of Room 2-B. Liquid dangerous and/or mixed waste is either placed in lab packs prior to storage in DMWSA or is transferred to the 219-S Tank System. Solid dangerous and/or mixed waste is contained in cardboard, polyethylene, glass, or metal containers.

Containers are chosen based on the compatibility with the waste, consistent with the requirements in WAC 173-303-630(4). Table C.3 lists typical inner containers, sorbent materials, outer containers, and labels used in containerizing the stored waste.

Containers received at the 222-S Operating Unit Group are either in good condition or over-packed to maintain integrity during the storage. Waste containers stored at 222-S Operating Unit Group will have the degree of separation, for compatibility purposes as needed to comply with WAC 173-303-630(9). A storage cabinet, container tray, bin, drum, portable sumps, or drum trays will serve as an outer container or a degree of separation. Inner bags, rigid liners, lab packs, or other approved containers (e.g. glass jars or plastic bottles) are made with materials which will not react with, and are otherwise compatible with wastes to be stored per WAC 173-303-630(4). The inner containment also could consist of a special medium or high performance coating on the inside of the metal container that is compatible with the waste.

Gas generation in containers is controlled to prevent pressurization exceeding 1.5 atmospheres and combustible gas concentrations exceeding the lower explosive limit for up to 20 years of storage. To prevent the potential buildup of gases in containers, vents such as NucFil[3], vent clips, or other devices can be used.

C.2.2 Container Management Practices

Container management practices include storage, packaging, repackaging, or sampling waste in containers, transferring containers to and from the 222-S DMWSA, Room 2-B storage area, and/or Room 4-E, and methods for handling and storage.

Before receipt at the 222-S Operating Unit Group, all off-site shipping containers are closed by the generator by means of a neoprene gasket, steel lid, locking ring, locking ring bolt, and a lock nut torqued tight or by other available methods to meet applicable U.S. Department of Transportation packaging requirements. Containers received from other Hanford Site TSD Units or facilities will be sent by U.S Department of Transportation or other U. S. Department of Energy approved equivalent packaging requirements. On receipt, each container or group of containers is inspected before acceptance. Any discrepancies that have been noted are resolved in accordance with Addendum B.

Each container can be handled individually or as a group. If handled individually, a cart, a hand-truck dolly, a fork-lift truck with 'barrel grabber', a crane with a 'barrel tong', by hand, or other methods could be used that meet the requirements of WAC 173-303-630(5)(b). The containers are placed in storage. Aisle space requirements are provided in Addendum F. The container packaging and handling is designed to maintain containment of the waste, provide retrieval capability of damage-free and contamination-free containers, and limit human exposure to dangerous waste and hazardous materials. In addition, documentation of process knowledge concerning the waste is used to identify any hazards. Appropriate labels are applied to the containers before acceptance for storage at the 222-S Operating Unit Group.

[3] NucFil[3] is a Registered Trademark of the Nuclear Filter Technology, Incorporated.

Waste handling, storage, and transfer methods are designed to ensure that dangerous and/or mixed waste containers remain closed in accordance with WAC 173-303-630(5) during storage and that containers are not opened, handled, or stored in an unsafe manner. Containers will be opened only to add or remove waste, package or repackage waste, or to sample waste. Location of these activities is dependent on space, available equipment, and radiological conditions. Specific actions include, but are not limited to, the following:

- To ensure safety, the storage areas are inspected in accordance with Addendum I, Table I-2. Weekly inspections and inventories are made of the containers in the 222-S DMWSA, Room 2-B storage area, and Room 4-E. These inspections and inventories are conducted by trained personnel, and are performed to ensure that containers are being stored safely and in compliance with requirements of Addendum I of this permit.
- Access to the 222-S DMWSA, Room 2-B storage area, and Room 4-E is controlled at all times. These waste areas can be accessed only by authorized personnel.
- All containers are inspected for signs of damage before being placed in use and as part of the waste acceptance process. Container damage can be such things as dents, distortion, corrosion, or scratched coating. Current operating practices recommend the use of new containers, but reused or reconditioned containers may be used. All damaged or leaking containers are placed in an overpack container. Overpack containers typically are made of steel or polyethylene and the selection for use is based on waste compatibility as described in Addendum B.
- Containers may be overpacked before going into any of the dangerous waste management units, and may occur within the three container storage areas. Smaller containers may be overpacked in or near fume hoods to provide airflow for capture of vapors, if required. Larger containers may be moved from the 222-S Operating Unit Group to rooms within the 222-S Laboratory that have overhead hoists, to the 222-S Crane Pad which also has a hoist, or may be lifted using a mobile crane. Overpacked containers are moved either to an onsite or offsite TSD unit for future management or managed within the 222-S Operating Unit Group.
- Only authorized personnel prepare and complete documents associated with the handling and transferring of dangerous and mixed waste.
- Spilled waste subject to this permit is managed in accordance with the building emergency plan (Permit Condition II.A.). Documentation of these activities is maintained in the 222-S Operating Unit Group operating record.

WAC 173-303-630(8)(b) and WAC 173-303-395(1) requirements are to be met for stored ignitable and reactive waste (Section C.2.5).

Containers are segregated by waste type and compatibility before storage in the 222-S DMWSA, Room 2-B and Room 4-E. Wastes are segregated by DOT hazard class and separated by use of spill pallets, pans (or equivalent devices), and storage locations. All waste containers placed into storage are entered in the operating record. All discrepancies identified on receipt of mixed waste are documented (Addendum B). Discrepancies are resolved with the offeror (Addendum B) of the mixed waste or the transfer/shipment is rejected. Containers that require packaging, repackaging, or sampling are processed in the 222-S DMWSA, Room 2-B storage area, or Room 4-E.

C.2.2.1 Container Labeling

All waste containers are labeled, per WAC 173-303-630(3), to adequately identify the major risk(s) associated with the contents of the containers. Labels are not obscured and must be readable during the course of inspections.

DRAFT

C.2.2.2 Packaging and Transfer of Waste in Containers

Packaging and transfer of waste containers in compliance with WAC 173-303-161 may occur in Room 2-B, Room 4-E, and the DMWSA. Packaging and transfer of waste containers will be documented in the operating record. Documentation regarding the packaging configuration of waste includes a container inventory sheet, a physical and chemical description, type and size of container, sorbent used, labeling and marking requirements, and information on segregation requirements. After all the waste to be packaged has been placed in the container, the lid is fastened on the container and properly closed. The container is weighed and the gross weight is marked on the container. A package identification number is affixed to the outer container. The package identification number is entered in the operating record. Access to the containers is controlled by controlling access to the rooms. Room 2-B storage area, Room 4-E, and the DMWSA have keyed entries and only authorized personnel have access.

C.2.2.3 Storage Configuration within Room 2-B Storage Area

This area will be used as extra storage space for containers of mixed waste. The management of ignitable and reactive mixed waste is discussed in Section C.2.5.1. A volume equal to twelve 208-liter containers (2,500 liters) can be stored within Room 2-B. Space between structures and containers is maintained at all times to allow adequate access for inspection and emergency actions. Containers with incompatible waste are separated spatially and/or by a separate containment system. Figure C.2 shows the layout of equipment and waste handling operations in Room 2-B storage area. More than twelve 208-liter containers can be stored including smaller containers that are stacked on larger containers, provided that the quantity of waste does not exceed 2,500 liters and a minimum of 76-centimeter aisle spacing is maintained.

Within the Room 2-B storage area, the Hood 16 sink drains to the 219-S Tank System. The Hood 16 drain line is ancillary equipment to the 219-S Tank System with a boundary beginning at the Hood 16 sink drain pipe connection to the hood sink (see Figure C.5). This hood and associated sinks are used for waste transfer and decontamination of small equipment. This drain line is used to transfer liquid waste consisting of unused sample portions, unused sample dilutions, expired reagents, liquid waste from sample analysis, standards materials, reagents, decontamination reagents, and other wastes that have been pre-approved as meeting the 219-S Tank System acceptance criteria in accordance with Addendum B. This hood is equipped with a water source which is used in equipment decontamination or used to flush the transfer lines during and after material is transferred.

C.2.2.4 Storage Configuration within Room 4-E Storage Area

This room is used for mixed waste container storage, packaging, repackaging, container sampling, and drum venting. (Drum venting is not required by this permit, but is performed as a best management practice for personnel protection.) The management of ignitable and reactive mixed waste is discussed in Section C.2.5.1. Containers of mixed waste in Room 4-E are stored in cabinets, in/on portable containment systems (e.g., spill pallets, sumps, container trays), or on the floor (if the waste does not contain free liquids). A total of up to six 208-liter containers can be stored within Room 4-E. Space between structures and containers is maintained at all times to allow adequate access for inspection and emergency actions. Containers with incompatible waste are separated spatially and/or by a separate containment system. Figure C.3 shows the general layout of equipment and waste handling operations in Room 4-E. More than six 208-liter containers can be stored including smaller containers that are stacked on larger containers or in cabinets, provided that the quantity of waste does not exceed 1,450 liters, and a minimum of 76-centimeter aisle spacing is maintained. Access to this room is through keyed entry controlled by the management of the 222-S Operating Unit Group.

C.2.2.5 Storage Configuration within the 222-S DMWSA

The 222-S DMWSA is divided into four cells (Figure C.1). This area is used for container storage of mixed waste and dangerous waste. Dangerous waste is typically stored separately from mixed waste. All

DRAFT

incompatible waste is segregated by storing incompatible waste in separate containers and providing separate containment systems. The management of ignitable and reactive mixed waste is discussed in Section C.2.5.1. For example, corrosive waste (acid and caustic waste) is stored in separate containers and is placed in or over separate containment systems. One possible arrangement of waste in the 222-S DMWSA is shown in Figure C.1. The storage configuration in the 222-S DMWSA complies with the aisle space requirements in WAC 173-303-340(3) and -630(5)(c), as well as incompatible waste requirements in -630(9). The quantity of waste stored will not exceed the containment system capacity requirements of WAC 173-303-630(7) or the storage capacity of the DMWSA which is 24,520 liters. Containers can be stacked two-high in limited circumstances (i.e., container weight and limited movement of handling equipment). Smaller containers such as 30-liter or 56-liter drums may be stacked on larger containers such as 208-liter drums.

C.2.2.6 Moving Containers out of the 222-S DMWSA, Room 2-B, and/or Room 4-E Storage Areas to Transfer Vehicle

Trained personnel inspect the containers to ensure containers are labeled properly and are in sound condition before transfer from the 222-S Operating Unit Group to another onsite TSD unit, offsite TSD facility, or an appropriately authorized facility. Containers are removed from the 222-S DMWSA, Room 2-B, and Room 4-E to the transfer vehicle via the methods described in Section C.2.2, thereby complying with the requirements of WAC 173-303-630(5)(b). Containers removed from Rooms 2-B and Room 4-E exit the facility through Door 10 or Door 13 depending on radiological conditions and the need for overhead crane use. Containers removed from the DMWSA will use the loading deck located at the DMWSA or the adjacent truck loading area. Waste transfer pathways are controlled by authorized personnel during movement of waste containers from the 222-S dangerous waste management units to the transport vehicle. Communications and access during waste transfers are controlled by 222-S personnel. The containers are loaded onto the transfer vehicle, continuously maintained in an upright position, and are not stacked during transport. The total load weight is not allowed to exceed truck capacity. The containers are restrained during transport to minimize movement.

C.2.2.7 Transfer Documentation

Waste documentation (i.e., container inventory, chemical data) is completed and accompanies a transfer of mixed or dangerous waste into and from the 222-S waste management units:

219-S Waste Handling Facility, 222-S DMWSA, Room 2-B, and Room 4-E to another onsite or offsite TSD facility, or other appropriately authorized facility. Waste movement and transfers are documented in the 222-S waste tracking system. Transfer of waste from the 222-S Operating Unit Group to an onsite or offsite TSD facility, or other appropriately authorized facility will be documented in accordance with Hanford Facility RCRA Permit Condition II.N.2 as described in WAC 173-303-370. All pipeline transfers are exempt from transfer documentation requirements in Permit Condition II.N.2.

C.2.3 Labeling System

Each outer container is marked with a package identification number that is used for tracking. For containers purchased from onsite stores, a barcode number is affixed prior to receipt and serves as the package identification number. Containers not purchased from onsite are assigned a package identification number when the container is placed in use. A list of these package identification numbers is maintained in the unit operating record. The package identification numbers are recorded on the container inspection checklist. A hazardous waste label is affixed. Each container is labeled with the appropriate major risk(s) such as ‘corrosive’, ‘toxic’. If a label is damaged or information is not legible, the old label is removed, obscured, or destroyed and a new label is affixed containing pertinent information. Inner containers may be added to partially filled outer containers. The container inventory will be updated when inner containers are added. Containers rendered empty in accordance with WAC 173-303-630(3) have labels removed or destroyed.

DRAFT

C.2.4 Containment Requirements for Storing Containers

The 222-S DMWSA consists of two enclosed metal storage structures. Room 2-B and Room 4-E are rooms within the 222-S Laboratory.

C.2.4.1 Containment System Design and Operation

Within the two structures of the 222-S DMWSA are two storage cells separated by a center wall. Each storage cell is provided with its own containment system called a basin. The basins are located beneath the steel platform (floor grating) in the cell. Each basin is 3.4 meters by 4.6 meters by 0.15 meter (deep) and is constructed of 10-gauge carbon steel, which in turn is lined with a chemical resistant epoxy coating for resistance to acids, alkalis, solvents, and salts. Each basin is capable of containing approximately 2,300 liters for a 222-S DMWSA containment system total of approximately 9,200 liters.

In the event of a leak or spill occurring within a cell, the spilled waste would be contained in the respective basin or separate containment system. The basin is sealed to prevent liquids from migrating to the other basin in the structure. The leak or spilled waste would not come in contact with the other contained waste as the floor grating covering each basin only allows liquids to flow down into the basin. All leaked and/or spilled waste will be removed as delineated in Section C.2.4.2.

The container storage areas in Rooms 4-E and 2-B are not designed with containment systems as stated in WAC 173-303-640(7)(c) since the areas are within a building and protected from precipitation. Containers can be placed on portable containment systems or elevated (e.g., pallets, skids), as discussed in Section C.1, to protect the containers from contacting accumulated liquids. Waste that does not contain free liquids or is not ignitable or reactive does not require a containment device as stated in WAC 173-303-630(7)(c) since the areas are within a building and are protected from precipitation.

Waste containing free liquid or waste that exhibits either the characteristic of ignitability or reactivity stored in Room 2-B or 4-E is placed on containment devices [WAC 173-303-630(7)]. These containment devices are of suitable size to contain the volume of the largest container or 10 percent of the volume of all the containers upon that containment device, whichever is greater. Within Room 2-B, reactive waste is segregated by placing waste in separate liquid tight containers and containment system.

C.2.4.1.1 System Design

The 222-S DMWSA consists of two structures that face one another and open onto a common loading platform. Each storage structure measures 9.8 meters long by 3.7 meters wide by 2.7 meters high. Each storage structure (Figure C.5) is divided into two identical separate compartments or cells (a total of four cells). Each cell has a door that opens onto a loading platform that lies between the two storage structures. The loading platform is approximately 3 meters in width. The storage structures and loading platform are elevated approximately 50 centimeters above the existing grade. Inside the 222-S DMWSA, containers rest on a chemical resistant grate above a steel secondary containment basin that is free of cracks and has a chemical resistant coating.

The loading platform, constructed between the two 222-S DMWSA structures, consists of grating that rests on a lattice of steel beams placed between the two structures. A removable protective fence is placed at the north end for operational safety. A lift located on the south end of the 222-S DMWSA is used to lift containers to the loading platform. On the opposite end (north) of the loading platform, containers can be raised manually or mechanically from the asphalt pad to the platform using a forklift. Once the waste containers are placed on the loading platform, the containers are moved in and out of the storage cells by way of carts, drum dollies, hand trucks or similar light equipment.–No heavy equipment, forklifts, etc., are allowed to operate on the loading platform or be used in the storage cells to move the waste containers. A 6-inch layer of concrete on a layer of asphalt is located below the steel grating to prevent the release of material to the environment in the event of a spill. Administrative controls include using equipment to prevent tipping during movement and using authorized, trained personnel.

DRAFT

The containment basins are enclosed and protected from precipitation. Each storage structure has a roof that collects and sheds the precipitation away from the doorways and loading platform. No gutters and/or downspouts are included in the design because of the low annual rainfall (approximately 15 centimeters per year). To prevent any standing water from accumulating beneath the 222-S-DMWSA, the surrounding grade is sloped. See Section C.2.4.1.4 and Section 4.2 of Addendum I for more detail on 'run-on' and 'run-off' management.

C.2.4.1.2 Structural Integrity of Base

The 222-S DMWSA structures rest on a system of footings and are elevated above a concrete pad at the north side of the 222-S Laboratory. The flooring for the structure is formed by placing (in parallel) a set of structural steel I-beams that span the entire length of each storage structure (approximately 9.8 meters). A channel was welded to the ends of the I-beams to form a closed cell. The structures are supported at each corner and are coupled to the concrete slab using approved seismic restraints.

The containment basin rests on top of the I-beams. The grate that forms the flooring in each cell rests on a set of cross channels that in turn rest on the bottom of the sump. The set of cross channels is oriented perpendicular to the set of structural steel I-beams. The floor and sump were constructed to support the weight of the containers or leaked liquids respectively.

The 222-S DMWSA structures were designed, fabricated, and installed in accordance with the requirements of WAC 173-303-630 and the 1997 Uniform Building Code.

C.2.4.1.3 Containment System Capacity

The volume of the containment system is required to be 10 percent of the volume of all containers stored within the system or 100 percent the volume of the largest container whichever is greater. As calculated in Section C.2.4.1, the DMWSA containment storage provided by each sump is approximately 2,300 liters. Based on these calculations and the physical limitation of the storage cell, containment system exceeds the 10 percent requirement.

Because the 222-S DMWSA is a covered storage area, precipitation is prevented from entering the structures and therefore is not included in these calculations. Furthermore, because dry chemicals are used for fire control, no adjustment for use of an automatic sprinkling system

(20 minutes of fire water) is necessary in the containment system capacity calculations.

Section C.1.1 lists the total containment and maximum container storage volumes for each storage location.

C.2.4.1.4 Control of Run-on

The only plausible major run-on events could result from either a thunderstorm or a water main break. No floods are predicted to affect the 222-S Operating Unit Group because the 200 West Area on the Hanford Site is approximately 100 meters above the Columbia River floodplain.

The only major run-on or run-off foreseen would be an event such as a fire sprinkler activation or pipe break. All 222-S Operating Unit Group buildings are roofed structures therefore, run-on is prevented. Containment systems in the 222-S Operating Unit Group are capable of holding various amounts of liquid, as the size of the storage varies. All waste stored in the 222-S Operating Unit Group structures are in closed containers, which limits the detrimental impact of a run-on or run-off situation. In the event that contaminated water is released from the 222-S Operating Unit Group resulting from flooding of a containment system by fire sprinkler activation or a pipe break (Section C.1.3), the incident will be treated as a spill.

The threat to the DMWSA from run-on resulting from either a thunderstorm or water main break is considered highly unlikely because the DMWSA is elevated approximately 48 centimeters above the surrounding grade and 25 centimeters above the concrete pad on which the structures rest. The area is

DRAFT

graded to slope away from the DMWSA, and a storm water drain leading to a catch basin, located to the north, is provided at the low point of the grading.

Room 2-B storage area and Room 4-E are located inside the 222-S Laboratory. As a result, no flooding and/or run-on, resulting from either a water main break or a thunderstorm, is included in the design.

C.2.4.2 Removal of Liquids from Containment Systems

Spilled material will be removed from the containment systems in the DMWSA, Room 4-E, and Room 2-B in as timely a manner as necessary to prevent overflow [WAC 173-303-630(7)] and harm to human health and the environment. If the spilled material is unidentified, sampling would be performed in accord with Addendum B, and the waste material stored in container(s) at a 222-S Operating Unit Group location until analytical results were received.

In the event of a spill or release that results in the collection of liquid waste material in the containment system, the following is performed:

- Containers affected are inspected for signs of leakage. Leaking containers are repackaged and identified in the 222-S Operating Unit Group operating record.
- Inspection reports are reviewed to identify any waste releases in the waste storage areas for which remedial actions have not been completed.
- The equipment used for removal of large quantities of liquid normally is typically a hand-held pump, vacuum system, or vacuum truck. Absorbents are typically used for removal of small amounts of liquid. Equipment and removal practices are dependent on the volume and nature of the leak or spill material. The waste material is placed in an approved container.
- Spill material will be managed as waste according to the requirements of WAC 173-303-640(7) and information regarding the event entered in the operating record.

The containerized waste is handled as follows:

- If the waste has been altered during stabilization and cleanup actions (absorbed, mixed, diluted, etc.), the containerized waste is placed in storage and managed in accordance with the provisions of Addendum B.
- The 222-S Operating Unit Group tracking system is updated to reflect the changes in waste description, volume, and storage locations.
- If the waste was not altered during stabilization and cleanup activities, the containerized waste is placed in the appropriate storage area, and the 222-S Operating Unit Group tracking system is altered to reflect any changes.

Completion of cleanup is documented in the 222-S Operating Unit Group operating record.

If a spill triggers implementation of the contingency plan (Addendum J), a recovery plan will be developed, as necessary, based on input from the building emergency director and 222-S management.

Records of all spills and releases of hazardous substances in or from the 222-S Operating Unit Group shall be maintained as part of the unit operating record.

C.2.5 Prevention of Reaction of Ignitable, Reactive, and Incompatible Wastes in Containers

A general description of the management of dangerous waste storage containers in the 222-S Operating Unit Group is provided in Sections C.2.2.3, C.2.2.4, and C.2.2.5. Figures C.1, C.2, and C.3 show a typical layout of container storage in each of the storage units. The following sections provide information on the management of reactive, ignitable, and incompatible waste in containers. The 222-S DMWSA has a pre-engineered dry chemical fire protection system designed to protect both

DRAFT

compartments. The suppression system is activated by a nationally recognized testing laboratory (e.g., Underwriters Laboratory, etc.) approved fusible link detection system.

The fire protection system used in Room 2-B and Room 4-E consists of heat activated ceiling sprinklers, smoke detectors, and alarms. Each ceiling sprinkler system is heat activated. Smoke detectors are located in the ceiling panels and are connected to the fire alarms. The heat activated sprinklers also activate the fire alarms that are monitored around-the-clock.

C.2.5.1 Management of Ignitable, Reactive and Incompatible Waste in Containers

The 222-S Laboratory generates and stores waste exhibiting the characteristics of reactivity or ignitability as specified in WAC 173-303-090 and also described in Addendum B of this permit. Incompatible waste includes waste that is unsuitable for mixing with another waste or material because the mixture might produce heat or pressure, fire or explosion, violent reaction, toxic dusts, fumes, mists, or gases, or flammable fumes or gases. Proper precautions are taken to prevent any off-normal situations from occurring. The waste is managed in accordance with WAC 173-303-630(8)(b) and WAC 173-303-395(1). Separate labpack containers are used, and other waste types are not packed with ignitable waste. Ignitable, reactive, or incompatible waste is separated from containers of other waste types in the 222-S DMWSA, Room 2-B, and Room 4-E. Within Room 2-B and Room 4-E, ignitable or reactive wastes are placed on separate containment systems.

Waste is not placed in an unwashed container that previously held an incompatible waste or material. Reactive cyanide- and sulfide-containing waste may be generated at the 222-S Laboratory. If generated, water reactive waste is packed in liquid tight containers.

Ignitable and reactive waste is stored in accordance with the International Fire Code per WAC 173-303-630(8).

Annual inspection of ignitable and reactive waste storage operations will be conducted in accord with WAC 173-303-395(1)(d) requirements described in Addendum I.

C.2.5.2 Design of Areas to Manage Incompatible Waste

Packages containing incompatible waste are not permitted in the same container. Incompatible waste is stored in separate containment systems, or individual spill pallets.

Containers that contain incompatible waste are separated in the 222-S DMWSA in accordance with WAC 173-303-630(9)(c). Personnel inspect the containers for proper packaging, labeling, marking, and waste information forms before transport. Within Room 2-B and Room 4-E, incompatible wastes are placed in separate containment systems.

C.3 219-S Tank System

This section describes the design and operation of the 219-S Tank System for treatment and storage of mixed waste. Major topics discussed in this section include the following:

- Design, installation, and integrity assessment of tanks and ancillary equipment
- Secondary containment system including leak detection
- Tank corrosion and erosion prevention
- Tank management practices
- Ventilation system to control air emissions

This section describes the current equipment and the upgrades to the 219-S Tank System. A general description of the 219-S Tank System is included in this permit. The waste handling and transfer system is shown in Figure C.4.

DRAFT

The piping from the 222-S Laboratory, as ancillary equipment to the 219-S Tank System, originates in several locations throughout the building as shown in Figure C.5. The lines are encased for secondary containment from the point of origin at the laboratory locations to the secondary containment for the waste tanks in compliance with WAC 173-303-640(4). These lines originate from the following locations:

- Room 2-B, hood 16 sinks
- Room 1-J, capped drain
- Room 1-K, capped drain
- Room 1-F, hot cell 1F, floorpan sink.
- Room 1-A, hot cell 1A, floorpan sink
- Room 1-E, hot cell 1E-1, floorpan sink.
- Room 1-E, hot cell 1E-2, floorpan sink
- Room 11-A, hot cells 11-A1A, 11-A1B, 11-A2, 11-A3, 11-A4, 11-A5, and 11-A6 floorpan sinks
- Tunnel T-4, T-4 sump pump
- Tunnel T-7, T-7 sump pump
- Tunnel T-8, T-8 sump pump

Liquid wastes from the above points of origin flow through two drain lines to terminate in Tank 104, except the two drain lines (DR-1 and DR-2) from Room 11-A that terminate in Tank 101 (Section C.3.4.6).

The boundary to the 219-S Tank System within the Room 2-B storage area is the Hood 16 sink drain pipe connection to the hood sink. Hood 16 and associated sinks are used for mixed waste transfers to the 219-S Tank System and decontamination of sampling and sample transport equipment. This drain line is used to transfer liquid waste consisting of unused sample portions, unused sample dilutions, expired reagents, analytical waste from sample analysis or treatability testing, standards materials, decontamination reagents, and other wastes that have been approved as meeting the 219-S Tank System acceptance criteria. This hood is equipped with a water source that can be used to flush the transfer lines and sinks after material is transferred.

The drain lines from Room 1-K and 1-J are capped and nothing is currently connected to these entry points.

The connection of the drain line to each of the hot cell floorpan sinks is the boundary for the 219-S Tank System. The hot cell floorpan sink drains lines from all hot cells (1-A, 1E-1, 1E-2, 1-F, 11-A1A, 11-A1B, 11-A2, 11-A3, 11-A4, 11-A5, and 11-A6) and are used for transfer of liquid waste. This waste consists of unused sample portions, unused sample dilutions, expired reagents, standards materials, decontamination reagents, wastes used for analysis and testing, and other wastes that have been pre-approved as meeting the 219-S Tank System acceptance criteria. These hot cells are equipped with a water source that can be used to flush the transfer lines after material is transferred.

The boundary of the 219-S waste management unit with the T-4, T-7, and T-8 sump drain lines is the point of connection for the discharge of the sump pump to the double-encased drain line. However, the sumps and the sump pumps in Tunnels T-4, T-7 and T-8 are normally only used for emergency purposes in the event that a process water line in one of the tunnels starts leaking. They may also be used for a water spray wash of tunnel areas for cleaning purposes and are not considered a part of the dangerous waste management unit.

Piping associated with the tank system in the concrete vault area is not encased when located in or above a RCRA compliant vault [WAC 173-303-640(4)(e)(ii)]. The secondary containment in the vault area

DRAFT

provides the secondary containment for this piping. The two pipes for transfer to tank farms are encased for secondary containment because they traverse the unlined vault that is not RCRA compliant.

C.3.1 Design, Installation, and Assessment of Tank System

The 219-S Waste Handling Facility was constructed in 1951 with the footprint that currently matches the area designated as part of the 219-S Tank System. The 219-S Tank System includes Tank 101, Tank 102, Tank 103, Tank 104, ancillary piping and equipment (see Table C.2), and a vault area which includes Cells A and B (Figure C.5). Liquid mixed waste flows by gravity from the 222-S Laboratory through a system of double-walled pipelines to the tanks located in the 219-S Tank System.

The 219-S vault area is a below-grade concrete structure with a minimum wall and floor thickness of 0.46 meters. Cell A in the vault area is approximately 3.66 meters wide by 6.40 meters long by 6.40 meters deep. Cell A contains Tank 101 and Tank 102. Cell B is subdivided in two compartments that are approximately 2.13 meters wide by 2.13 meters long by 6.40 meters deep. The northern compartment in Cell B contains Tank 103. Tank 103 is no longer part of the active 219-S Tank System (Section C.3.1.1.2).

In 1994, an upgrade to the facility included the addition of stainless-steel liners to Cell A and the southern compartment of Cell B in the vault area, addition of Tank 104 in the southern compartment of Cell B, and upgrades to the ancillary piping and equipment. The upgrade also added a planning room, change room, and buffer area room to the facility which is not part of the 222-S Operating Unit Group.

The 219-S Waste Handling facility also includes the operating gallery and sample gallery. The 219-S operating gallery contains a below-grade pipe trench which permits piping and electrical connections to the vault area. The operating area of the operating gallery is a slab-on-grade metal-framed structure. The sample gallery is a slab-on-grade concrete floor and wall structure.

C.3.1.1 Design Requirements

The concrete vault area, operating gallery, and sample gallery of the 219-S Tank System were constructed in 1951 in accordance with the 1949 edition of the Uniform Building Code. Completed in 1999, the 219-S Tank System was upgraded using the 1994 Uniform Building Code and WAC 173-303-640 to include the following:

- Double containment pipelines from several locations, as identified in Section C.1.2, within the 222-S Laboratory to the 219-S Tank System.
- Integrity assessments of Tank 101 and Tank 102 and design, installation, and inspection of Tank 104 was performed. Information is available in Sections C.3.12 – C.3.14
- Placement of a stainless-steel liner in each of the two cells in the concrete vault that house the storage and treatment tanks (Tanks 101, 102, and 104).
- Installation of new ancillary equipment including pumps, leak detection, liquid level instrumentation, and cell piping.
- Completion of design, construction, and installation inspections.

C.3.1.1.1 Description of Ancillary Equipment

A total of six waste transfer pipelines connect the 222-S Laboratory to the 219-S Waste Handling Facility. Four of these pipelines currently are operational and two are spare lines. These pipelines are encased to meet secondary containment requirements [WAC 173-303-640(4)] and originate from various locations within the 222-S Laboratory. One of the operational pipelines (WT-5702) originates from equipment in Rooms 2-B, 1-J, 1-K, and hot tunnel sump T-4, with one of the spare lines (WT-5701) running parallel from inside tunnel T-4 to inside 219-S Cell B. Another operational pipeline (WT-5704) originates from hot cells 1-A, 1-E1, 1-E2, 1-F, and hot tunnel sumps T-7 and T-8, with the other spare line (WT-5703) running parallel from inside tunnel T-8 to inside 219-S Cell B. The other two operational pipelines (DR-

1 and DR-2) are from the 11A hot cells. Figure C.4 shows a simplified piping layout and how those connections discharge into the 219-S Waste Handling Facility

The drain pipes for liquid waste that flow from the Hood 16 sinks in Room 2-B have secondary containment. Drains for liquid waste that flow from hot cells in Rooms 1-A, 1-E, 1-F, and 11-A are double-walled piping.

The pipelines from the 222-S Laboratory to the 219-S Waste Handling Facility are installed below grade and are designed to transfer waste using gravity flow. The minimum slope is 1.87 percent to facilitate flow. The pipelines are an encased double-containment design consisting nominally of a 2-inch pipe inside a 4-inch pipe, although a 1-inch pipe encased in a 2-inch pipe was used for some of the hookups. The smaller pipe carries the waste and the larger pipe provides the secondary containment. Both the primary and secondary pipes are fabricated from Schedule 40 304L stainless steel. Leak detection probes for active drain lines are located in the annulus of the piping. The Room 11-A lines (DR-1 and DR-2) have single leak detector locations (LDE-1 and LDE-2, respectively) because the lines are buried directly under the hot cells. The drain lines from T-4 (WT-5702) and from T-8 (WT-5704) have leak detectors (LDE-5 and LDE-6, respectively) that are located on the collection header inside the 222-S Laboratory tunnels where the pipe exits the building. The downgradient leak detector locations (LDE-3 and LDE-4) for WT-5702 and WT-5704, respectively, are located just outside of the concrete vaults where the waste enters the 219-S Tank System. The leak detection probes are connected to remote alarm panels located in both the 219-S Tank System operating galley (instrument panel IP3) and in Room 3-B inside the 222-S Laboratory. The annular secondary containment area of the double-wall pipe drains into the 219- S Tank System.

Inside the 219-S vault area, transfer pumps and associated piping are used to move liquid waste from Tank 101 (Pump-4) and Tank 104 (Pump-2) to Tank 102, from Tank 102 (Pump-1) to DST System tank 241-SY-101 (WT-SNL-5350) or 241-SY-103 (WT-SNL-5351), sump 7 (Pump-7) to Tank 101, and sump 9 (Pump-9) to Tank 104. Liquid from sump 6 (Pump-6), which is not part of the secondary containment or tank system, is transferred to Tank 104.

Leak detection probes (WT-LE-7 and WT-LE-9) are installed in sumps 7 and 9, respectively, within the vault to provide notification of potential leaks in the tanks or water intrusion. The leak detection probes are connected to remote alarm panels located in both the 219-S operating galley (instrument panel IP3) and in Room 3-B inside the 222-S Laboratory.

Liquid level indicators are installed on Tanks 101, 102, and 104. The level indicator readings are transmitted to the 219-S operating gallery chart recorders (instrument panel IP3) which are equipped with alarm setpoint adjustment capabilities. The alarm setpoints for the waste tanks liquid level indicators are set below the tank maximum operating capacity and alarm locally within the 219-S operating gallery and in Room 3-B inside the 222-S Laboratory. Normal operation of the tank system is below the alarm setpoints to prevent overfilling of the tanks.

Within the 219-S vault area is a pipeline from the discharge of pump P1 to the connection to the DST System pipelines at the outside of the west wall of the cell B vault area. This pipeline includes a surge suppressor (WT-ARSR-1), a manual valve (219S-WT-V-5351), two motor-operated valves (219S-WT-5354 and 219S-WT-V-5355), and encased piping beginning downstream of the motor-operated valves to provide secondary containment to transverse over the Tank 103 portion of Cell B. The manual valve (normally open) is used to provide additional isolation of the transfer line for maintenance work associated with the pump and piping system. The motor-operated valves (normally closed) are used to direct a waste transfer to either 241-SY-101 or 241-SY-103 in the DST System and are controlled with key switches in the 219-S operating gallery with only one opened during a waste transfer to the DST System.

Valves associated with the 219-S Tank System are provided for routing or isolation of various

DRAFT

components. There are manual valves (LD-1, LD-2, WT-LD-V-3, WT-LD-V-4, WT-LD-V-5, and WT-LD-V-6) installed on each of the drain line leak detectors (LDE-1, LDE-2, LDE-3, LDE-4, LDE-5, and LDE-6, respectively), which are maintained in the closed position and are used for draining the leak detectors. There are two manual valves on the transfer line from the pump line from Tank 104 which can be configured to pump to Tank 101 (WT-V-T10) (normally closed) or Tank 102 (WT-V-T11) (normally open). The Tank 104 to Tank 101 valve is provided to allow waste transfer to Tank 101 if both Tank 102 and Tank 104 are full. In addition, there is one manual valve and three motor-operated valves in the vault associated with the waste transfer line to the DST System. The other motor-operated valve (219S-HV-305) (normally open) is located on the top of the transfer line to allow the transfer line to drain after completion of a waste transfer to the DST System. This motor-operated valve is only closed during the pumping of Tank 102 to the DST System.

The 219-S operating gallery includes the following:

- Tank 201 (2650 liter), which is used for the product addition of caustic.
- A 208-liter drum for dissolving $NaNO_2$ and/or caustic.
- Raw water service.
- Associated valves and piping to Tank 102 for treatment and flushing.

Tank 201 and the 208 liter drum are used for product addition only, and do not treat, store, or dispose of dangerous/mixed waste and therefore are not part of the 219-S waste management unit and are not subject to this permit.

Ancillary equipment is equipped with secondary containment or is inspected daily with the exception of those portions noted in Section C.3.3. Table C.2 provides a listing of ancillary equipment. Addendum I, Table I-1, identifies the inspection requirements.

C.3.1.1.2 Description of Tanks

Tank 101 and Tank 102 are flat-bottomed steel tanks, 2.74 meters in diameter by 2.74 meters tall. The tanks are constructed of 1.27-centimeter thick niobium stabilized type 347 stainless steel. The tanks were fabricated in 1943, but were not used until installation into the 219-S Tank System in 1951. Tank 101 and Tank 102 each have an approximate volume and maximum operating capacity of 15,140 liters. The maximum operating capacity limits are established to remain within the design capabilities of the liquid level monitoring system and prevent overflows. The tanks are each equipped with a liquid level monitoring system, temperature indication, and an agitator. Tank 101 and Tank 102 are contained in Cell A of the vault. In addition, Tank 102 is equipped with a sampling system, because it is the primary tank for treatment of the liquid waste prior to transfer to the DST System.

Tank 104 was fabricated in 1995 and is 1.83 meters in diameter by 3.05 meters tall. The tank is constructed from 0.79-centimeter-thick 304L stainless steel with a total volume and maximum operating capacity of approximately 7,192 liters. The maximum operating limits are established to remain within the design capabilities of the liquid-level monitoring system and prevent overflows. This tank is equipped with a liquid level measuring system, temperature indication, and an agitator. Tank 104 is located in the southern chamber of Cell B of the vault.

Tank 103 was placed in service in 1951 in the northern chamber of Cell B and used for collection of hot cell waste until it was taken out of service in about 1994. Tank 103 is constructed of 0.25 inch Type 309S-Cb stainless steel with 1,500 gallon capacity. Tank 103 underwent an integrity assessment in 1990 (WHC-SD-CP-ER-030). The report stated that Tank 103 was not leaking, and that the tank system showed little evidence of degradation after 40 years of operating service. However, the assessment determined that the tank supports did not meet seismic qualifications. During the upgrade to the 219-S Tank System for secondary containment, it was determined that it was not feasible to remove the Tank 103. Tank 103 is suspended from a steel plate with a poured-in-place concrete cover block. Tank

DRAFT

penetrations run through the concrete and the steel plate. Tank support members are welded to the tank and to the steel cover plate. Thus, Tank 103 was pumped, rinsed, disconnected, blanked, and taken out of service (Figure C.4). Closure of Tank 103 will be performed as described in Addendum H, Section H.3.3.1.

C.3.1.1.3 Description of Sampling System

The Tank 102 sampling system is a portion of the 219-S Tank System that does not require a double-containment pipe. The sampling system does not meet the definition of ancillary equipment [WAC 173-303-040]. Samples are collected in the sample gallery from a lead (shielded) sample box, which contains a sample riser and a 4-milliliter-sample-cup air jet. Samples are removed from the sample cup with a portable sampler. The balance of the waste is returned to the tank once the sample has been collected in the sample box located in the 219-S Tank System sample gallery room. Any leakage from the sampling system inside the sampling gallery is subject to clean-up and managed as a dangerous or mixed waste.

C.3.1.1.4 Description of Tank Ventilation System

The headspace above the liquid mixed waste in Tanks 101, 102, and 104 is ventilated to the atmosphere through the demister in Tank 105, a high-efficiency particulate air (HEPA) filter, exhaust fan, and up the 296-S-16 exhaust stack. The demister in Tank 105 is a fiberglass mesh which serves as a moisture de-entrainer to condense some of the humidity, which forms in the air in the tank headspace. The removal of the moisture reduces the wetting of the HEPA filter. The HEPA filter removes any particulates that may be exhausted up the ventilation system prior to release out of the stack. The stack is sampled and the system is maintained in accordance with the Hanford Site Air Operating Permit approved by the Washington State Department of Health (WDOH).

C.3.1.2 Integrity Assessments

An initial design integrity assessment of the 219-S Tank System was performed in 1990 (WHC-SD-CP-ER-030, maintained in the 222-S Operating Record). This assessment included a structural analysis on Tanks 101 and 102, which demonstrated that under normal operating conditions the required minimum wall thickness is 0.157 centimeter.

With the completion of tank system upgrades at the 219-S Tank System, a subsequent series of assessments were completed in compliance with WAC 173-303-640(3).

The current 219-S Tank System assessment reports address existing tank system components [WAC 173-303-640(2)] and new tank system components [WAC 173-303-640(3)]. The report for each design and/or installation assessment can be found in the Operating Record.

The development of a schedule for future evaluations, as required by WAC 173-303-640(2)(e) and WAC 173-303-640(3)(b), is addressed in Sections C.3.1.3 and C.3.1.4.

C.3.1.3 Additional Requirements for Existing Tanks

Both visual and ultrasonic tests were performed on Tanks 101 and 102. The wall thickness was measured to be nominally 1.27 centimeters, indicating that the tanks have not experienced any measurable deterioration over 40 years of operation. Based on this information, released in 1999, and the requirement in WAC 173-303-640(2)(e), the tanks were determined to be fit for use with a 20-year interval to the next required integrity assessment. The components of the 219-S Tank System will be reevaluated in 2019, 20 years from the release of the current tank integrity assessment.

C.3.1.4 Additional Requirements for New Tanks

The installation and inspection of Tank 104 was certified by an independent, qualified, registered professional engineer in 1999. Based on this information and the requirements in WAC 173-303-640(3)(b), no reduction in tank wall thickness is anticipated over the planned 20-year interval to the next

DRAFT

required integrity assessment. As a result, the components of the 219-S Tank System will be reevaluated in 20 years (2019).

C.3.2 Secondary Containment Requirements and Release Detection for Tank Systems

This section presents a discussion on containment system design and capacity, control of run-on, and the leak detection system. The secondary containment system consists of structures, equipment, and operating methods designed to prevent the release of mixed waste to the environment. As discussed in this section, the mixed waste treatment and storage tanks are located in a below-grade concrete vault. In addition, leak detection and overfill equipment are fitted in the tanks and vault.

C.3.2.1 Description of 219-S Containment and Leak Detection Systems

Tanks 101, 102, 103, and 104 are contained in a below-grade concrete vault. The vault is divided into two cells, A and B. Tanks 101 and 102 are contained in Cell A, and Tanks 103 and 104 are contained in Cell B. Cell B is divided into two chambers: one chamber containing Tank 103 and the other chamber containing Tank 104. Tank 103 has been pumped, rinsed, and isolated (Section C.3.1.1.2) and is not included as parts of the operational aspects of this permit. Tank 103 will be closed as part of the 219-S Tank System closure (Addendum H).

The concrete vault was constructed in 1951. The vault floor varies from 0.4 to 0.7 meters in thickness. The vault wall varies from 0.5 to 1.1 meters thick. The vault is approximately 6.4 meters deep and is divided into two cell areas, A and B. Cell A is approximately 3.61 meters wide by 6.34 meters long, and Cell B is approximately 2.08 meters wide by 5.64 meters long. Cell B is further divided into two chambers, northern and southern, separated by a 1.1-meters-thick by 3.4-meters-high wall. Tank 101 and Tank 102 were placed in Cell A, and Tank 103 was placed in the northern chamber of Cell B. At the time of construction until the time of upgrade in 1994, the southern chamber of Cell B was vacant.

In 1999 stainless-steel liners were installed in Cell A and the southern chamber in Cell B containing Tank 104. The stainless-steel liners are designed to contain approximately 125 percent of the total tank volumes in each cell.

In Cell A, the nominal size of the liner is 3.61 meters by 6.34 meters by 1.625 meters (averaged). The liner is fabricated from stainless steel with walls 0.95-centimeter thick and the floor 1.27-centimeters thick. An average height is used as the cell is sloped approximately 20 centimeters from south to north towards the sump in the northwest corner. A cubical-shaped sump (sump 7) is located in the northwest corner of Cell A. Grout has been placed between the liner and the existing concrete vault to form a stable foundation for the tanks.

In the southern chamber in Cell B, the nominal size of the liner is 2.09 meters by 2.09 meters by 2.09 meters in height. The liner is fabricated from stainless steel with sidewall and bottom thickness the same as the liner in cell A. The liner is sloped 4 centimeters from back to front. Sump 9 is located in the southwest corner of Cell B. As discussed with Cell A, grout has been installed between the liner and the existing concrete vault.

In addition to the secondary containment system, a process control system is in place to detect leaks from the tank system. All tanks and the 219-S Tank System sumps have level probes, are lighted, and have audible alarms to indicate when the liquid level limit is exceeded. An alarm sounds when the liquid level setpoint in a tank is exceeded, or when enough liquid accumulates in a sump to exceed the liquid level setpoint. Operational test records are maintained in the 222-S Laboratory Complex operating record.

The hot tunnel sumps are located in the hot tunnels T-4, T-7, and T-8 of the 222-S Laboratory. These sumps will collect water leaking from ruptured process water piping that runs through each of the tunnels. Each of these sumps is poured into the concrete floor of the hot tunnels and has approximately a 68-liter capacity. The sumps are equipped with an electrical powered sump pump with a float switch set to automatically turn the pump on before the sump is full which pumps the liquid waste into the 219-S Tank

DRAFT

System. When a sump pump float switch is engaged, an alarm is received in Room S3-D and Room 3-B. The 219-S Tank System begins at the point that the pump line discharges into the 219-S Tank System piping. The 219-S Tank System piping in the hot tunnels is encased to provide secondary containment so the hot tunnels, including these sumps and pumps, are not deemed as secondary containment or ancillary equipment for the 219-S Tank System.

Alarms for the tanks and the 219-S Tank System sumps are located in Room 3-B of the 222-S Laboratory and in the 219-S Tank System operating gallery [WAC 173-303-640(4)(c)]. The 222-S Laboratory is operated to ensure any alarm will be observed and responded to within 24 hours. The leak detection system and associated pumps allow for detection and removal of any accumulated waste within 24 hours. Leaks are responded to according to Permit Condition III.8.P.2.

C.3.2.2 Secondary Containment Volume

The volume of the secondary containment provided by the stainless-steel liners in Cell B is calculated to be approximately 2.09 meters by 2.09 meters by 2.09 meters by 1,000 liters/cubic meters = 9,130 liters based on the size of the liner. The approximate total volume of Tank 104 is calculated to be 7,192 liters. Similarly, the volume of the secondary containment provided by the stainless-steel liner in Cell A is calculated to be approximately 3.61 meters by 6.34 meters by 1.625 meters by 1,000 liters/cubic meters = 37,192 liters. The approximate combined total volume of Tanks 101 and 102 is 30,280 liters. Leak detection instrumentation has been placed in both Cell A and Cell B. The leak detection is designed to detect any liquid that collects in the sumps. Pumps have been installed in both cells to remove liquid that accumulates in the sumps.

C.3.2.3 Run-on

Run-on of precipitation into the 219-S Tank System vault is controlled. The vault area is enclosed under a metal-sided building with removable roof sections. There are no fire suppression systems contained in this structure, and the process water to the tanks in the vault is controlled with valves in the 219-S operating gallery. The concrete walls of the vault extend approximately 15 centimeters above the exterior grading around the facility. The grading is sloped to a storm drain located to the southeast of the vaults. Any precipitation that may enter the vault is collected in either sump 9 in Cell B or sump 7 in Cell A. When the liquid level in the sump reaches the setpoint, an alarm sounds and supervision immediately is notified of the situation. Any moisture collected in the sumps is pumped to the waste tanks according to specified operating methods and in accordance with WAC 173-303-640(7).

A temporary portable berm or secondary containment may also be used to control run-on at the 219-S Waste Handling facility during the pump out to a tanker truck or other containers. A temporary berm will only be utilized when use of a spill pallet or sump is not possible or feasible.

C.3.3 Variances from Secondary Containment Requirements

Variance from the need for secondary containment was requested and approved by Ecology for the following two conditions:

- A request for a waiver from secondary containment on a 2-1/2 inch-long vertical section of pipeline that penetrates the floor of Room 1-J was granted by Ecology (Letter; 99-EAP-446). The section of pipe connects Room 1-J to the pipeline in tunnel T-4. This pipeline is equipped with secondary containment downstream of the section of pipe that penetrates the floor. Upstream from the floor, the pipeline can be inspected. The waiver is subject to change based on future use of the pipeline and/or technological advancement.
- A drain header exists in tunnel T-8 that consists of a valve and a small section of pipe (approximately 2 inches in length). The drain header allows for cleanout of the line in the event that solid material settles out in the line. Although the header does fit the functional definition of ancillary equipment, agreement has been reached that secondary containment is not required

DRAFT

because the drain header does not operate under pressure (Letter; 99-EAP-446) The drain header is sloped upgradient of the direction of flow and therefore under normal operating conditions has limited contact with the liquid waste.

C.3.4 Tank Management Practices

The liquid radiological and mixed waste treated and stored at the 219-S Tank System is corrosive and contains metals and very low concentrations of some organic compounds. Waste acceptance criteria are found in Addendum B of this permit. Liquid mixed waste normally is routed to specific tanks based on configuration controlled piping and jumper configurations. Liquid mixed waste from Room 2-B Hood 16; and hot cells 1-A, 1E-1, 1E-2, and 1-F are routed to Tank 104. Liquid mixed waste from the 11A hot cells is routed to Tank 101. Liquid radiological and mixed waste in Tanks 101 and 104 is transferred to Tank 102. Treatment may occur in Tanks 101 and 104 through the use of NaOH for pH control and deactiviation of ignitable or water reactives through controlled addition of water. Routing of waste to tanks other than normal configuration could occur, with configuration controlled design changes, in instances where a tank becomes temporarily unusable for the specified purpose. These temporary configuration changes would be considered major modifications and would require additional integrity assessments pursuant to WAC 173-303-640(2) and appropriate modification of permit requirements and authorization.

Before the waste can be transferred to the DST System, the pH and the nitrite concentration must meet DST waste acceptance criteria. The pH and nitrite conditions are specified in the DST waste acceptance criteria to slow the rate of corrosion in the DST System. The treatment of the mixed waste for pH and nitrite concentration also reduces the potential for Tank 102 corrosion while stored in the 219-S Tank System awaiting transfer to the DST System. A discussion of the annual volume and waste characteristics treated and stored in the 219-S Tank System is provided in the Part A Form and Addendum B.

Various methods are used to limit the types of solutions routed to the 219-S Tank System. All waste that is transferred to the 219-S Tank System has been reviewed and approved as required by the Addendum B in this permit.

Waste transfer methods are designed to prevent spills and overflows, prevent misrouting of waste, monitor the waste, ensure the safety of operating personnel, and provide records of activities at the 219-S Tank System. Controls to prevent overfilling of tanks include instrumentation within the tanks and operating guidelines to monitor the amount of waste in the tanks to ensure the tanks remain below maximum operating capacity to maintain a margin of safety. Liquid level indicators are installed on all three operating tanks in the 219-S Tank System. The high-level alarms are set below the tank maximum operating capacities and annunciate in the 219-S operating gallery and in Room 3-B of the 222-S Laboratory. In addition to alarms, periodic surveillances are performed and tank liquid levels are recorded. Sump 7 in Cell A and sump 9 in Cell B are also equipped with liquid level alarms that alarm at three different levels to provide an indication of liquid in the sumps and rate of rise. The sump alarms also alarm in the 219-S operating gallery and in Room 3-B.

Prior to transfer to the DST system, waste batches are transferred from Tank 101 and/or Tank 104 to Tank 102. The contents of Tank 101 can be blended with the contents of Tank 104 in Tank 102. Treatment with sodium hydroxide and sodium nitrite occurs in Tank 102 before the transfer of the Tank 102 contents to the DST System. In the event 219-S Tank System mixed waste does not meet the DST System waste acceptance criteria, or will otherwise not be transferred to the DST System, these treatment steps might not be required to meet waste acceptance criteria for a different onsite TSD unit, offsite TSD facility, or an appropriately authorized facility. Waste treatment such as described would only be done to meet waste acceptance criteria for a downstream TSD. The treated waste is sampled and analyzed for receiving unit waste acceptance parameters identified in Addendum B. Treatment of the

DRAFT

waste may occur in Tank 101 or Tank 104 with the transfer of caustic and/or sodium nitrite to the tanks using the drain lines in Room 2-B Hood 16, or hot cells.

C.3.4.1 Tank 101

Waste routed to Tank 101 is normally generated in the 11A hot cells. If Tank 102 is full, waste from Tank 104 may also be routed to Tank 101. The contents of Tank 101 typically are transferred to Tank 102 for treatment. However, treatment may also occur at Tank 101. Treatment of waste in Tank 101for pH with the addition of caustic is a best management practice intended to extend the life of the tank beyond the predicted design life by reducing the corrosion caused by some of the acids in the tank. Deactivation of ignitable or reactive waste through the controlled use of water can also occur in Tank 101. Tank 101 is equipped with an agitator, liquid level indication, and temperature indication.

C.3.4.2 Tank 104

Tank 104 receives liquid mixed waste generated during 222-S Laboratory operations. Wastes transferred to Tank 104 originate from Room 2-B Hood 16; hot cells 1-A, 1E-1, 1E-2, and 1-F; and hot tunnel sumps T-4, T-7, and T-8. Figure C.4 shows the various sources of waste transferred to Tank 104. The contents of Tank 104 are transferred to Tank 102 for treatment, but may be transferred to Tank 101 if Tank 102 is full. Tank 104 is equipped with an agitator, liquid level indication, and temperature indication. Treatment of waste may occur in Tank 104 for pH with the transfer of caustic to the tank via Room 2-B Hood 16 or hot cells. Treatment of the waste in Tank 104 is a best management practice intended to extend the life of the tank beyond the predicted design life by reducing the corrosion caused by some of the acids in the tank. Deactivation of ignitable or reactive waste through the controlled use of water can also occur in Tank 104.

C.3.4.3 Tank 102

Tank 102 is the primary treatment tank for mixed waste being transferred to the DST System or other on-site or off-site facility, or another appropriately authorized facility. Tank 102 receives batches of waste from Tank 101 and/or Tank 104. The volume of waste treated in Tank 102 and the frequency of treatment vary depending on the rate of waste generation. Treatment occurs on a batch basis when sufficient volume has accumulated in Tank 101 and/or Tank 104. Before Tank 102 contents are transferred to the DST System, the laboratory determines the amount of sodium hydroxide needed to achieve a pH that meets the DST waste acceptance criteria and adds the sodium hydroxide. A sample is taken to ensure that the solution is the appropriate pH. The correct amount of sodium nitrite is added.

The tank agitator operates during pH adjustment to prevent spot heating or boiling caused by the addition of large quantities of sodium hydroxide to an acid solution. A Tank 102 transfer record is completed to document the transfer. The information required includes the amount of chemicals added during treatment, transfer time, and the volume of water used for flushing the transfer line. Following treatment, the contents in Tank 102 are transferred to the DST System by way of underground piping, tank trailer, or to other TSD facilities using containers.

C.3.4.4 Transfer of Waste by Underground Piping

A total of six underground waste transfer pipelines connect the 222-S Laboratory to the 219-S Tanks System (Figure C.5). Four of these pipelines currently are operational and two are spare lines. These pipelines originate from various locations within the 222-S Laboratory. One of the operational pipelines (WT-5702) originates from equipment in Rooms 2-B, 1-J, 1-K, and hot tunnel sump T-4, with one of the spare lines (WT-5701) running parallel from inside tunnel T-4 to inside 219-S Cell B. Another operational pipeline (WT-5704) originates from hot cells 1-A, 1-E1, 1-E2, 1-F, and hot tunnel sumps T-7 and T-8, with the other spare line (WT-5703) running parallel from inside tunnel T-8 to inside 219-S Cell B. The other two operational pipelines (DR-1 and DR-2) are from the 11-A hot cells. Origination of each of these lines is discussed in Section C.1.2. Waste meeting the waste acceptance criteria for the 219-

DRAFT

S Tank System is transferred through these pipelines.

Liquid waste from Tank 102 is normally transferred through underground piping to the DST System. Prior to transferring the waste, pre-treatment and post-treatment analyses are conducted on the waste in Tank 102. These analyses are submitted to DST System operations for verification that the waste meets DST System acceptance criteria and for approval to transfer. For transfer to the DST System, the P1 pump is used to transfer the waste out of Tank 102 through one of two transfer lines, 219S-SNL-5350 or 219S-SNL-5351, to either 241-SY-101 or 241-SY-103 in the DST System. The routing of the waste is predetermined by DST System operations. A laboratory waste transfer data sheet is used to initiate the transfer through the underground pipeline. This sheet indicates waste meets the DST System acceptance criteria, records the amount of waste transferred to the DST System, and is retained as an operating record.

C.3.4.5 Tank Trailer or Other Container Transfer

A tank trailer or other containers are occasionally used for the transfer of waste from Tank 102 to the DST System, to an onsite TSD unit, to an offsite TSD facility, or to another appropriately authorized facility. Transfers to another onsite TSD, or to another offsite TSD facility, or to another appropriately authorized facility, are nonroutine requiring special planning and equipment. The 219-S Tank System requires reconfiguration for installation of a pump, jumpers, hoses, venting, and secondary containment for transfer of the liquid mixed waste into a tanker truck or to other containers. Reconfiguration of the 219-S Tank System is done in accordance with applicable sections of WAC 173-303-640. Transfers other than through the normal underground waste lines would only be considered if the underground line transfer capability was not available or if the waste does not meet DST System acceptance criteria. A laboratory waste transfer data sheet is used to initiate the transfer of the contents of Tank 102 to the tank trailer. This data sheet documents the quantity of waste being transferred and whether or not the properties of the waste are within acceptable limits according to the receiving unit's waste acceptance procedure and criteria. Land disposal restriction information is documented before transfer.

The receiving unit's/ facility's waste profile documentation and transfer/shipment requirements will determine the documentation used to transfer/ship the contents of Tank 102 to other containers. Land disposal restriction information is documented before transfer.

Transfer of Tank 102 contents to a tank trailer or other container requires staging of the tank trailer or other containers adjacent to the 219-S Tank System. Although transfer operations are designed to minimize staging time adjacent to the 219-S Tank System, the tank trailer or other containers are staged until the transfer is accomplished to an onsite TSD unit or shipment to an offsite TSD facility, or appropriately authorized facility. Approval to transfer/ship will be obtained from the receiving onsite TSD unit, or offsite TSD facility, or appropriately authorized facility, according to that unit's/facility's waste acceptance procedure and criteria before pumping the tanks.

C.3.4.6 Inspection of Tanks and Surrounding Area

Daily inspections of the 219-S Tank System include but are not limited to evaluation of data gathered from leak detection monitoring (Addendum I). Leak detectors are installed on the secondary containment for all active drain lines and vault areas of the 219-S Tank System. Leak detectors LDE-1 and LDE-2 detect leaks on lines DR-1 and DR-2, respectively (i.e., 11A hot cell drain lines). Leak detectors LDE-3 and LDE-5 detect leaks on the drain line WT-5702 (i.e., drain line exiting the 222-S Laboratory via tunnel T-4). Leak detectors LDE-4 and LDE-6 detect leaks on WT-5704 (i.e., drain line exiting the 222-S Laboratory via tunnel T-8). The drain line leak detectors are capable of detecting less than 1 liter of liquid that may leak to the secondary containment.

Leak detector WT-LE-7 detects leaks into sump 7 which is located in Cell A of the 219-S secondary containment vault. Leak detector WT-LE-9 detects leaks into sump 9 which is located in Cell B of the 219-S secondary containment vault. The sump leak detectors each have three alarm settings that provide

DRAFT

indications of flow rate of a leak and extent of the leak. These detectors are set to alarm at approximately 4.2 liters, 8.4 liters, and 156 liters.

The basis for using leak detectors and daily data review in lieu of physical tank inspections is radiological health concerns inspecting the data gathered from monitoring equipment results and ALARA considerations. Operating staff would be exposed to considerable radiological exposure from the liquid waste stored in the tanks and residual contamination in the drain lines if physical inspections were to occur.

C.3.4.7 Staging of Highly Radioactive Out of Service Piping in the T8 Tunnel Alcove

Piping from 222-S Hot Cells and sinks leading to 219-S Tank was upgraded to comply with WAC-173-303-640(f) as required by HFFACO Milestone M-32-02. The piping, even though rinsed, posed a significant radiological exposure hazard. M-32-02 closure documents (see Addendum H) concluded that it was not feasible to remove the piping from the T8 Tunnel vicinity and that the out-of-service high dose drain piping could be staged within the 222-S Laboratory T8 Tunnel until closure, as described in Addendum H, would occur. Operational requirements for this pipe's staging are:

- Piping is staged in the shielded staging area
- The staging area is posted
- Entry into the staging area is prohibited unless approved by 222-S Laboratory facility manager.
- No material is to be moved into the staging area without the Ecology Project Manager's approval.
- Record of the inventory is kept in the facility operating record and noted on the facility drawings
- The piping inventory is identified in the Annual Hanford Land Disposal Restrictions (LDR) Summary Report submitted under HFFACO Milestone M-26-01.

C.3.5 Labels or Signs

Due to the ALARA concerns associated with the 219-S Tank System, signs identifying the tanks contents and major risks associated with the contents are posted at personnel access points to the 219-S Tank System to meet the requirements of WAC 173-303-640(5) and WAC 173-303-395(6). The tanks within the 219-S Tank System are not labeled. In lieu of tank labels, administrative controls and physical access controls are in place to prevent access to the 219-S Tank System or exposure to wastes managed by the tank system. Warning signs for the 219-S Tank System are described in Addendum I.

C.3.6 Management of Ignitable or Reactive Waste in Tank Systems

Ignitable and reactive waste defined in WAC 173-303-090(7)(a)(i), (ii), (iii), (iv), and (v) can be introduced into the 219-S Tank System ancillary equipment provided that (1) the downstream receiving unit can accept the waste, and (2) compliance with WAC 173-303-395(1) is demonstrated. Ignitable and reactive waste is not introduced into the 219-S Tank System unless the requirements of WAC 173-303-640(9) is met. Additional information concerning the DEACT treatment can be found in Addendum B.

In addition, reactive waste defined in WAC 173-303-090(7)(a)(vi), (vii), and (viii) is prohibited from management in the 219-S Tank System. 219-S Tank System waste acceptance criteria and prohibited waste can be found in Addendum B of this permit.

C.3.7 Management of Incompatible Waste in Tank Systems

Incompatible waste can be introduced into the 219-S Tank System provided that the WAC 173-303-395(1)(b) requirement is met. Additional information concerning incompatible waste can be found in Addendum B of this permit.

C.4 Air Emissions Control

This section addresses the 222-S Operating Unit Group requirements for air emission standards under

DRAFT

WAC 173-303-692 (Subpart CC) for certain hazardous waste managed in the 222-S DMWSA which incorporates by reference, 40 CFR 264, Subpart CC.

The air emission standards of Subpart CC are applicable to containers having a design capacity greater than 0.1 cubic meters. Labpack configurations are not subject to Subpart CC standards because the inner containers are less than 0.1 cubic meter. Subpart CC standards are not applicable to containers and tanks managing mixed waste. Therefore, the 219-S Tank System, Rooms 4-E and 2-B waste management units are not subject to Subpart CC standards.

C.4.1 Demonstrating Compliance with Subpart CC Standards

Containers used to manage dangerous waste at the 222-S Operating Unit Group must conform to 40 CFR 264.1086 (f) container standards. Containers with a design capacity greater than 0.1 cubic meters and less than or equal to 0.46 cubic meters must meet Level 1 container standards for air pollution emissions control. Containers with a design capacity greater than 0.46 cubic meters but not in “light material service” must also meet Level 1 standards. Level 2 standards apply to containers that have a design capacity of more than 0.46 cubic meter of waste and are in “light material service.” Where a container having a design capacity greater than 0.1 m^3 is used for treatment of a hazardous waste by a waste stabilization process, Container Level 3 standards shall be used at those times during the waste stabilization process when the hazardous waste in the container is exposed to the atmosphere.

The monitoring requirements for Level 1 containers include a visual inspection of the container, its cover, and closure device when a container of dangerous waste is received at the DMWSA, and at least once every 12 months when stored onsite for one year or more.

If U.S. Department of Transportation compliant containers are not used at the 222-S Operating Unit Group, alternate container management practices are used that comply with the Level 1standards as applicable. Specifically, Level 1 standards allow for a

> "container equipped with a cover and closure devices that form a continuous barrier over the container openings such that when the cover and closure devices are secured in the closed position there are no visible holes, gaps, or other open spaces into the interior of the container. The cover may be a separate cover installed on the container...or may be an integral part of the container structural design....” [40 CFR 264.1086(c)(1)(ii)].

An organic-vapor-suppressing barrier, such as foam, also may be used [40 CFR 264.1086(c)(1)(iii)]. Section C.2 provides detail on container management practices at the 222-S Laboratory Complex.

The liquid mixed waste managed in the 219-S Tank System is not subject to the requirements for air emission standards contained in WAC 173-303-691 [40 CFR 265 Subpart BB], because the waste does not contain organic concentrations at 10 percent or greater. The headspace air is exhausted through the 296-S-16 stack as described in Section C.3.1.1.4.

DRAFT

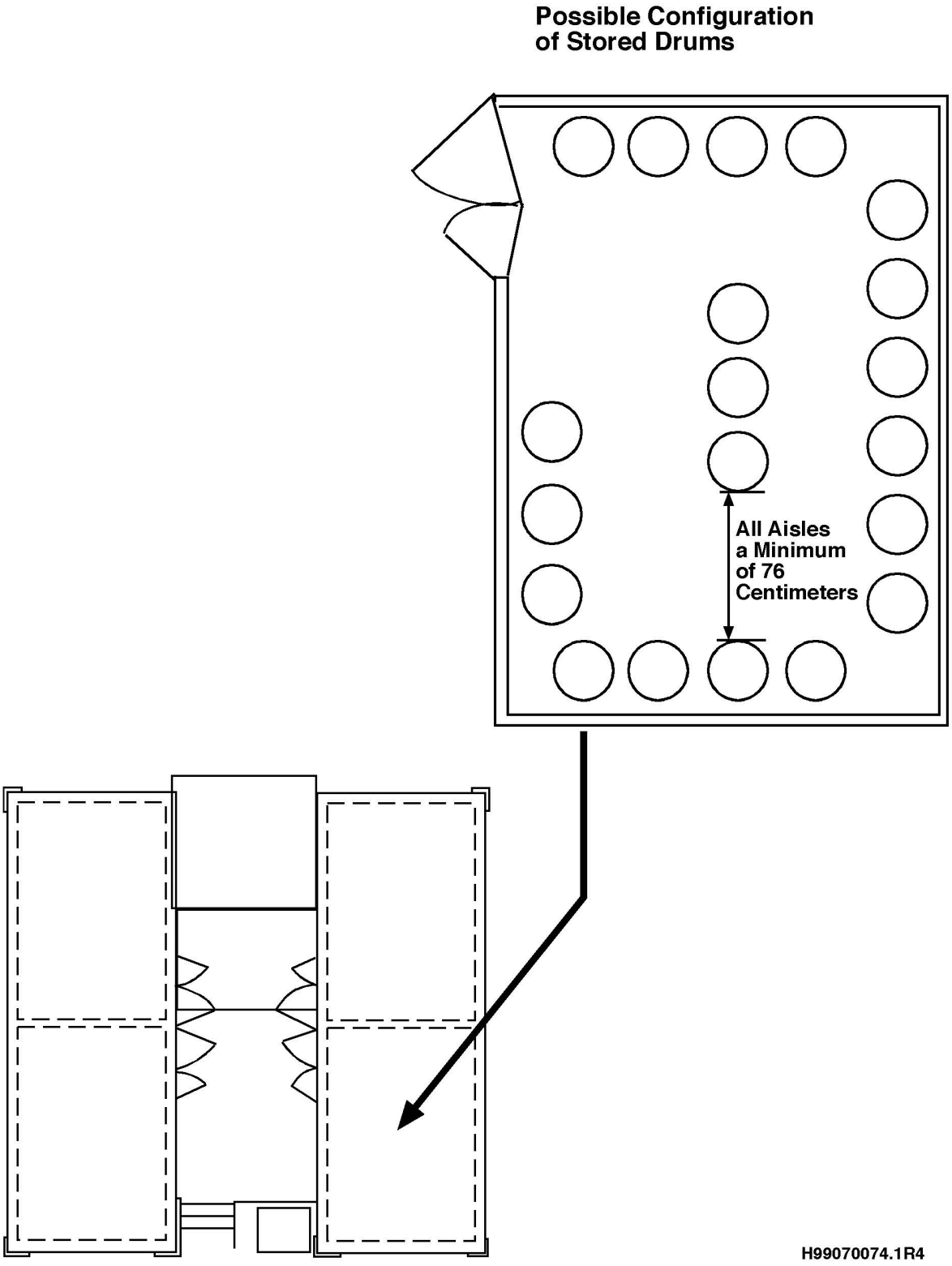

Figure C.1 General Layout of Storage in the 222-S DMWSA.

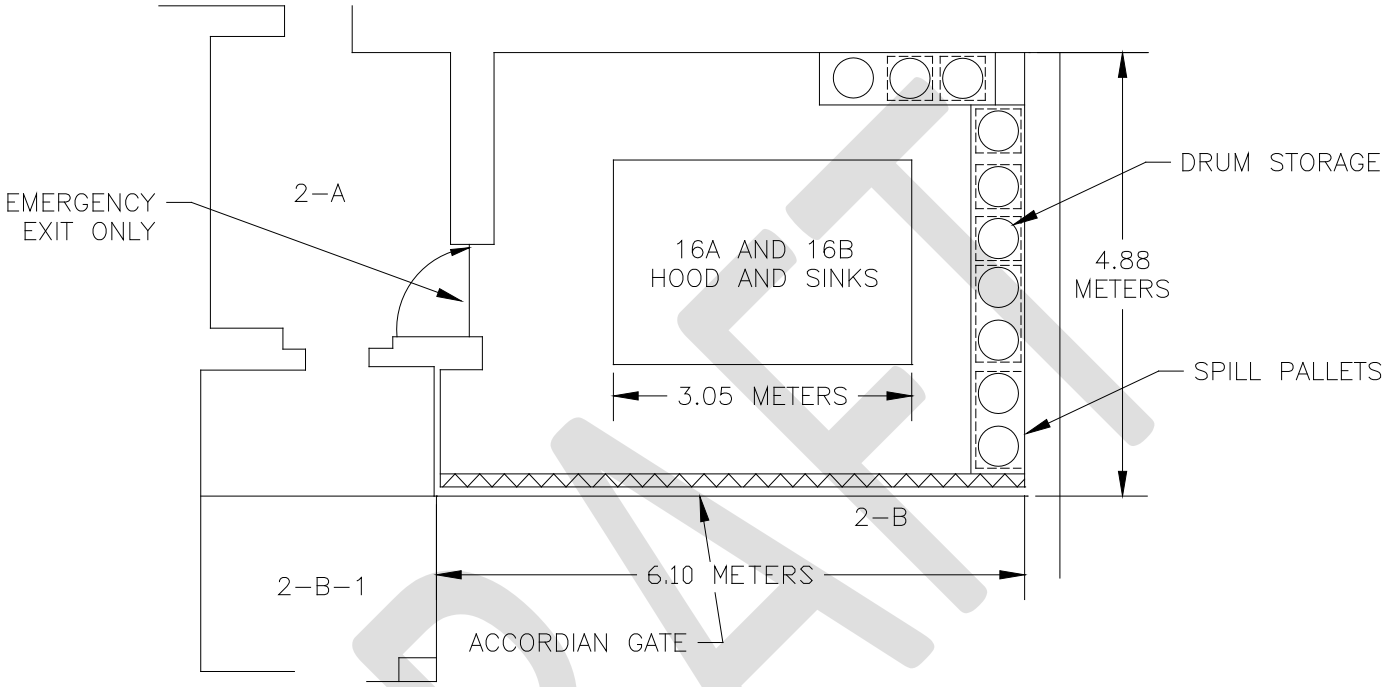

Figure C.2 General Layout of Room 2-B.

DRAFT

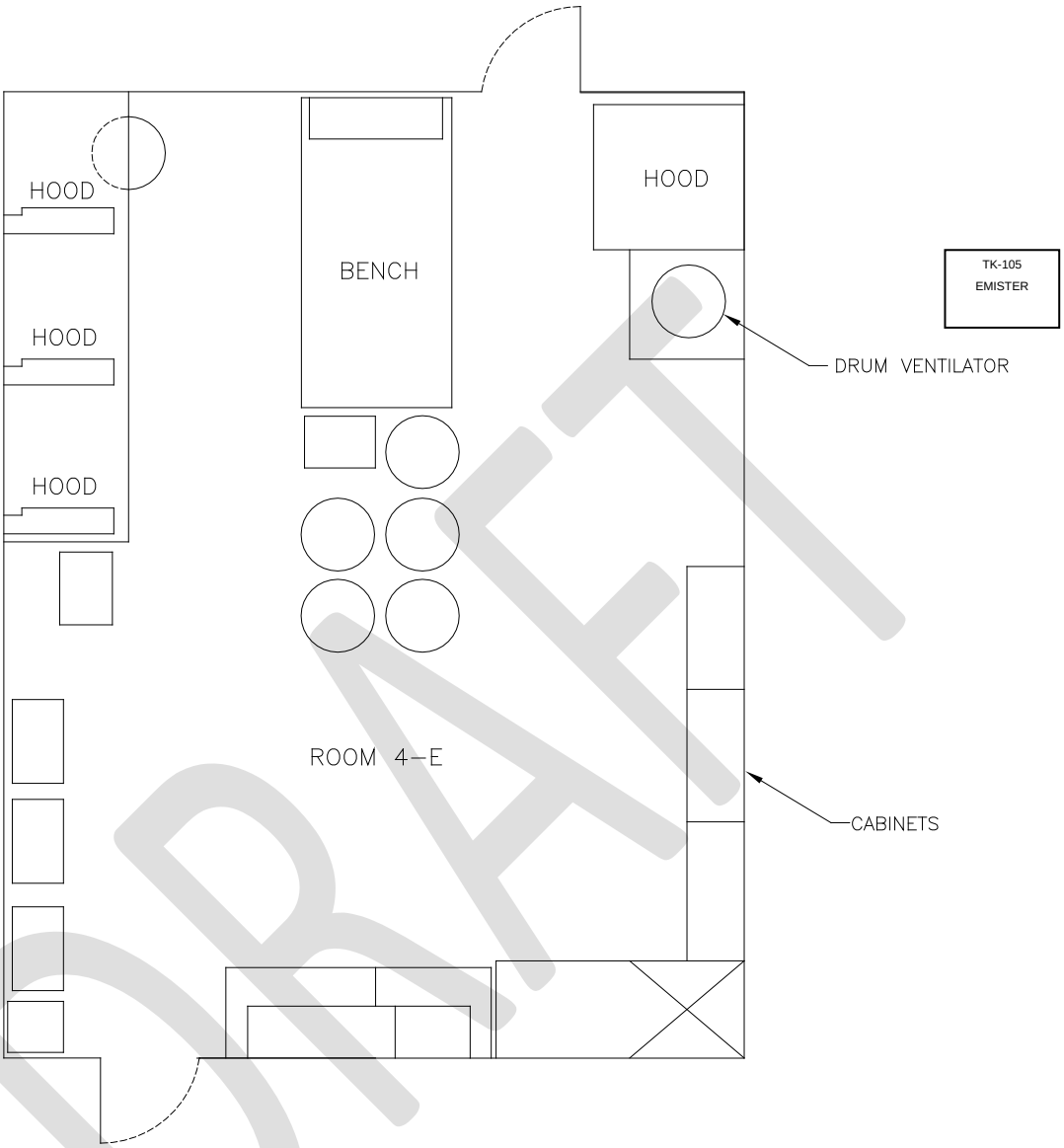

DRAFT

Figure C.3 General Layout of Room 4-E.

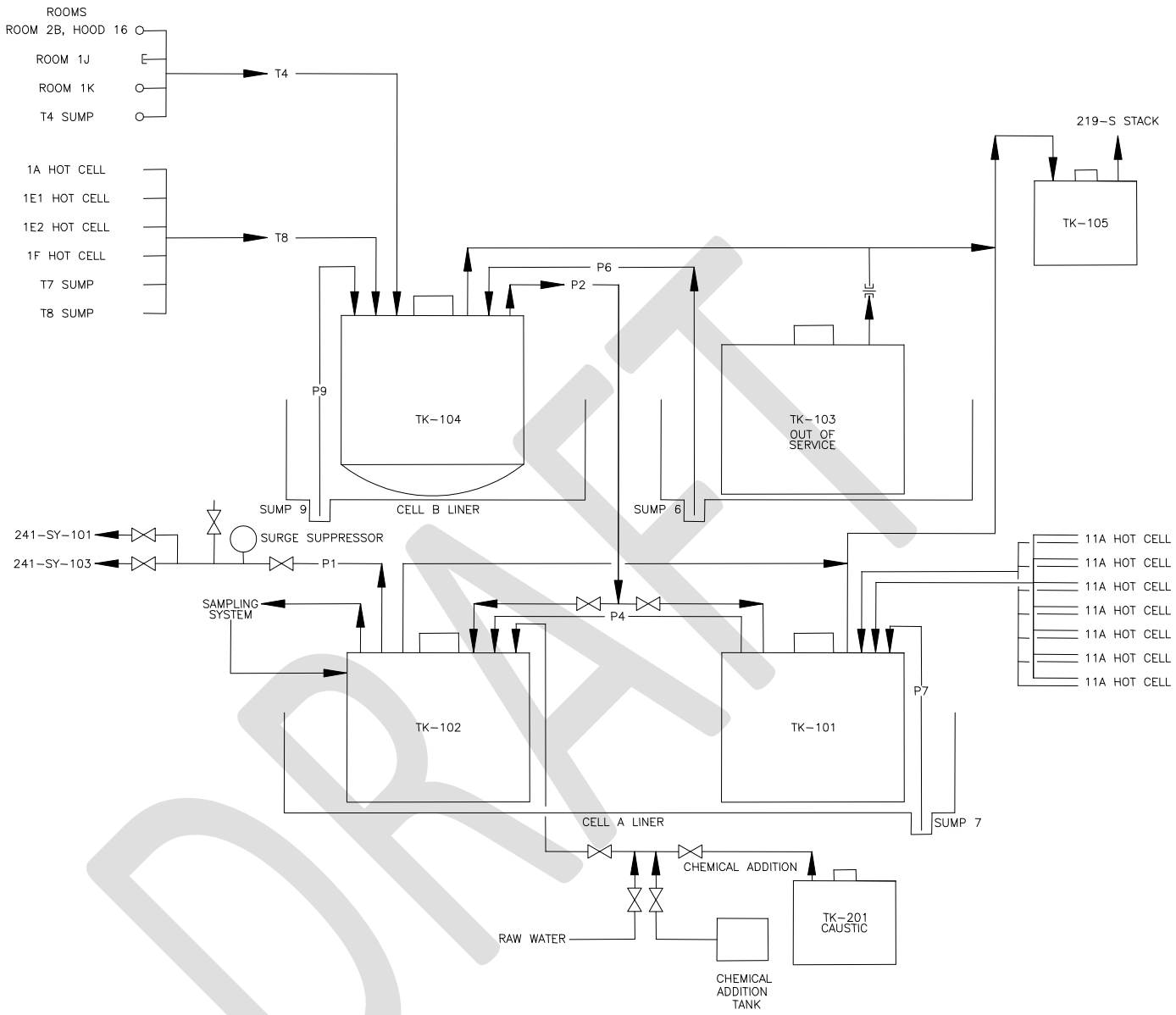

Figure C.4 Typical Routing for the 219-S Tank System and Associated Systems

.

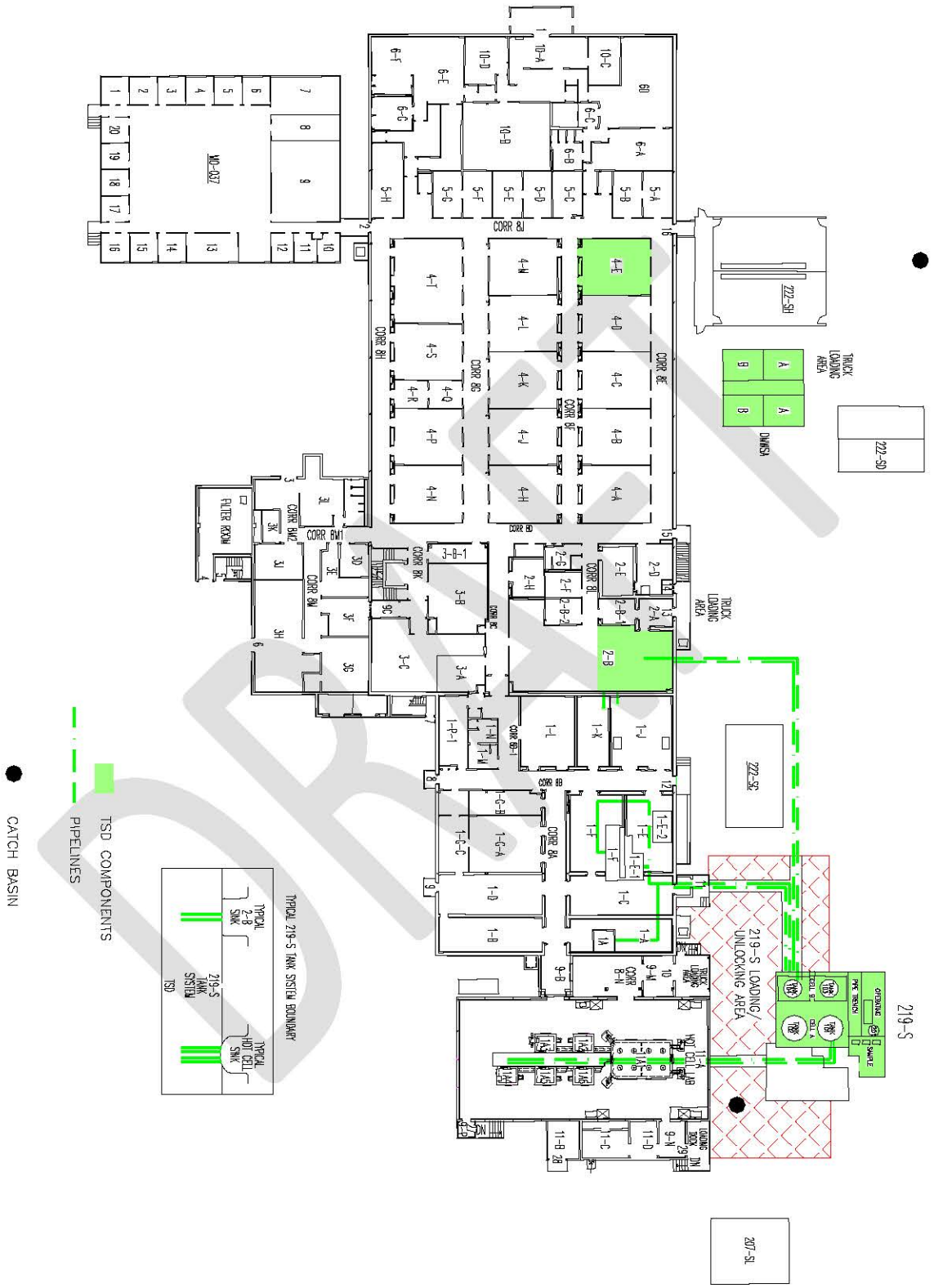

Figure C.5. 222-S Complex Treatment, Storage, and Disposal Unit Configuration.

Table C.1 Engineering Drawings from Appendix 4A in the Part B Permit Application

Drawing number	Drawing name	Location described by the drawing
H-2-78364, Rev 0, Sheet 7	Arch/ Elec Plans, Sections and Details.	DMWSA
H-2-825524, Rev 3, Sheet 1	Structural Liner B Installation Plan Section and Details.	219-S Tank System, Cell B with Tank 104
H-2-829177, Rev 0, Sheet 1	Civil/ Structural Liner Install Cell A Plan, Sect., and Det.	219-S Tank System, Cell A with Tanks 101 and 102
H-2-93451, Rev 9, Sheet 1	Hot Waste Drain System	Rooms 2-B, 1-J, 1-K, 1-F, 1-E, 1-A and 11-A. Sump Pumps T-4, T-7, and T-8. 219-S Tank System

DRAFT

Table C.2 Listing of 219-S Tank System Ancillary Equipment.

Equipment Identification	Description
219S-HV-305	Motor-operated vent valve for drain lines WT-SNL-5750 and WT-SNL-5751
219S-WT-V-1010	Drain line WT-SNL-5750 secondary containment drain valve
219S-WT-V-1011	Drain line WT-SNL-5751 secondary containment drain valve
219S-WT-V-1012	Drain line WT-SNL-5750 secondary containment vent valve
219S-WT-V-1013	Drain line WT-SNL-5751 secondary containment vent valve
219S-WT-V-5351	WT-P-1 transfer line isolation valve
219S-WT-V-5352	219S-HV-305 vent line check valve
219S-WT-V-5354	Motor-operated valve for isolation of drain line WT-SNL-5751
219S-WT-V-5355	Motor-operated valve for isolation of drain line WT-SNL-5750
WT-V-T3	WT-5702 drain line trap drain valve
WT-V-T4	WT-5704 drain line trap drain valve
WT-V-T10	Isolation valve for transfer to Tank 101 from Tank 104
WT-V-T11	Isolation valve for transfer to Tank 102 from Tank 104
WT-V-T12	DR-2 drain line trap drain valve
WT-V-T13	DR-1 drain line trap drain valve
DR-1	Drain line from 11A hot cells
DR-2	Drain line from 11A hot cells.
WT-5701	Spare drain line from tunnel T-4
WT-5702	Active drain line from tunnel T-4
WT-5703	Spare drain line from tunnel T-8
WT-5704	Active drain line from tunnel T-8
219S-SNL-5350	Transfer line from 219-S to 241-SY-101
219S-SNL-5351	Transfer line from 219-S to 241-SY-103

DRAFT

WT-A-101	Tank 101 agitator
WT-A-102	Tank 102 agitator
WT-A-104	Tank 104 agitator
WT-ARSR-1	Transfer line surge suppressor
WT-P-1	Transfer pump P1
WT-P-2	Transfer pump P2
WT-P-4	Transfer pump P4
WT-P-6	Transfer pump P6
WT-P-7	Transfer pump P7
WT-P-9	Transfer pump P9
LDE-1	Leak detector element on drain line DR-1 located outside 219-S vault
LDE-2	Leak detector element on drain line DR-2 located outside 219-S vault
LDE-3	Leak detector element on drain line WT-5702 located outside 219-S vault
LDE-4	Leak detector element on drain line WT-5704 located outside 219-S vault
LDE-5	Leak detector element on drain line WT-5702 located inside tunnel T-4
LDE-6	Leak detector element on drain line WT-5702 located inside tunnel T-8
WT-LE-7	Sump 7 leak detector element
WT-LE-9	Sump 9 leak detector element
LD-1	Drain valve for leak detector LDE-1
LD-2	Drain valve for leak detector LDE-2

DRAFT

Table C.2 Listing of Ancillary Equipment (Continued).

Equipment Identification	Description
WT-LD-V-3	Drain valve for leak detector LDE-3
WT-LD-V-4	Drain valve for leak detector LDE-4
WT-LD-V-5	Drain valve for leak detector LDE-5
WT-LD-V-6	Drain valve for leak detector LDE-6
WT-CV-P1A	Pump P1 diaphragm air bleed check valve
WT-CV-P1B	Pump P1 diaphragm air bleed check valve
WT-SV-6618	Pump P1 diaphragm solenoid air bleed control valve
WT-PT-5356	Transfer line pressure transmitter
Piping	Miscellaneous cell A and cell B piping jumpers

DRAFT

Table C.3 Typical Equipment Used in Containerizing Waste for Storage.

Inner Containers
• Polyethylene bottles with liquid-tight screw-on lids • Glass bottles with liquid-tight screw-on lids • Polyethylene bags • Slip-lid cans • 90-mil polyethylene liners.
Sorbent Materials
• Sorbent pads (for aqueous or organics): polypropylene pads • Sorbent material (for aqueous or organics): alkylstyrene co-polymer beads • Amorphous silicate (for organic or inorganic liquids other than acids) • Fine-grained pillow (for inorganics)
Outer Containers
• DOT UN1A1 steel containers with solid lid, seal ring, locknut, and bolt [49 CFR 178.504] • DOT UN1A2 steel containers with solid lid, seal ring, locknut, and bolt [49 CFR 178.504] • 38-liter steel containers with lids and closures • 114-liter steel containers with lids and closures • DOT 208-liter polyethylene containers [49 CFR 178.509] • Metal Boxes [49 CFR 178.512] • Cardboard containers. [49 CFR 178.516]
Labels
• Bottle identification labels • EPA hazardous waste labels • DOT hazard class diamond-shaped labels (for shipping containers only)

DOT = U.S. Department of Transportation.
EPA = U.S. Environmental Protection Agency

DRAFT

This page intentionally left blank.

DRAFT