ADDENDUM B

WASTE ANALYSIS PLAN

DRAFT

This page intentionally left blank

DRAFT

ADDENDUM B
WASTE ANALYSIS PLAN

Contents

B WASTE ANALYSIS PLAN B.1
B.1 Introduction B.1
B.2 Purpose B.1
B.3 Scope B.1
B.4 242-A Evaporator Process Description B.1
B.5 Waste Feed Identification B.3
B.5.1 General Constituent Description B.3
B.5.2 Classification of Waste B.3
B.5.3 Dangerous Waste Numbers B.4
B.6 Waste Acceptance Process B.4
B.7 Waste Feed Acceptance Process B.5
B.7.1 Identification of Candidate Waste Feed B.6
B.7.2 Candidate Waste Feed Acceptance B.6
B.8 Secondary Waste Sampling and Analysis B.7
B.8.1 Process Condensate Waste Sampling Process B.7
B.9 Process Control Aqueous Waste Sampling and Analysis B.8
B.10 242-A Evaporator Acceptance Criteria B.8
B.10.1 Candidate Feed Tank Waste Acceptance Criteria B.8
B.11 Sample Collection and Analysis B.9
B.11.1 Candidate Feed Tank Sampling and Analysis B.9
B.11.2 Process Condensate Sampling and Analysis B.11
B.11.3 Analyte Selection and Rationale B.12
B.12 Analytical Methods and Quality Assurance and Quality Control B.14
B.12.1 Laboratory Selection B.14
B.12.2 Analytical Methods B.14
B.13 References B.15

DRAFT

Figures and Tables

Figure B.1. 242-A Evaporator Simplified Schematic B.2
Table B.1. Waste Designation for Process Condensate B.4
Figure B.2. 242-A Evaporator Waste Acceptance Process B.5
Table B.2. Candidate Feed Tank Sample Point Selection B.13
Table B.3. Analytes for Candidate Feed Tanks B.13
Table B.4. Analytical Methods for Candidate Feed Tank Stream Analytes B.15

DRAFT

ACRONYMS

ASTM	American Society for Testing and Materials
AWWA	American Water Works Association
CFR	Code of Federal Regulations
C_T	total carbon
DOE	U. S. Department of Energy
DSC	differential scanning calorimeter
DST	Double-Shell Tanks
Ecology	Washington State Department of Ecology
ETF	200 Area Effluent Treatment Facility
GC	gas chromatography
HDPE	high-density polyethylene
IC	Ion Chromatography
IC_T	total inorganic carbon
IR	infrared
LDR	land disposal restriction
LERF	Liquid Effluent Retention Facility
MS	mass spectrometry
N/A	not applicable
QA	quality assurance
QC	quality control
RPD	relative percent difference
TEDF	Treated Effluent Disposal Facility
TCLP	toxicity characteristic leaching procedure
TOC	total organic carbon
TSD	treatment, storage, and/or disposal
VOA	volatile organic analysis
WAC	Washington Administrative Code
WAP	waste analysis plan

DRAFT

METRIC CONVERSION CHART

Into metric units			Out of metric units		
If you know	Multiply by	To get	If you know	Multiply by	To get
Length			**Length**		
inches	25.40	millimeters	millimeters	0.0393	inches
inches	2.54	centimeters	centimeters	0.393	inches
feet	0.3048	meters	meters	3.2808	feet
yards	0.914	meters	meters	1.09	yards
miles	1.609	kilometers	kilometers	0.62	miles
Area			**Area**		
square inches	6.4516	square centimeters	square centimeters	0.155	square inches
square feet	0.092	square meters	square meters	10.7639	square feet
square yards	0.836	square meters	square meters	1.20	square yards
square miles	2.59	square kilometers	square kilometers	0.39	square miles
acres	0.404	hectares	hectares	2.471	acres
Mass (weight)			**Mass (weight)**		
ounces	28.35	grams	grams	0.0352	ounces
pounds	0.453	kilograms	kilograms	2.2046	pounds
short ton	0.907	metric ton	metric ton	1.10	short ton
Volume			**Volume**		
fluid ounces	29.57	milliliters	milliliters	0.03	fluid ounces
quarts	0.95	liters	liters	1.057	quarts
gallons	3.79	liters	liters	0.26	gallons
cubic feet	0.03	cubic meters	cubic meters	35.3147	cubic feet
cubic yards	0.76456	cubic meters	cubic meters	1.308	cubic yards
Temperature			**Temperature**		
Fahrenheit	subtract 32 then multiply by 5/9ths	Celsius	Celsius	multiply by 9/5ths, then add 32	Fahrenheit
Force			**Force**		
pounds per square inch	6.895	kilopascals	kilopascals	1.4504×10^{-1}	pounds per square inch

Source: *Engineering Unit Conversions*, M. R. Lindeburg, P.E., Second Ed., 1990, Professional Publications, Inc., Belmont, California.

DRAFT

B WASTE ANALYSIS PLAN

B.1 Introduction

This waste analysis plan (WAP) addresses analysis and waste acceptance process necessary to accept and manage dangerous/mixed waste in dangerous waste management units at the 242-A Evaporator according to requirements of the *Hanford Facility Dangerous Waste Permit for the Treatment, Storage, and Disposal of Dangerous Waste* WA7 89000 8967 (Permit) (Ecology 2008).

B.2 Purpose

The purpose of the WAP is to ensure waste at the 242-A Evaporator is managed properly in accordance with permit conditions established pursuant to WAC 173-303.

Regulatory and safety issues are addressed in the WAP by establishing decision criteria for waste acceptance and management applicable to waste to be received and treated at the 242-A Evaporator. The decision criteria and associated data quality requirements are set by establishing limits for waste and waste management operational parameters such as reactivity, waste compatibility, and operational requirements of the 242-A Evaporator. Waste that fails these decision criteria are not accepted for management at the 242-A Evaporator. In some cases, individual waste streams that are not acceptable at the 242-A Evaporator may be pre-treated or blended with other compatible waste streams to meet the 242-A waste acceptance criteria. Such pre-treatment or blending, however, would occur at dangerous waste management unit(s) other than the 242-A Evaporator according to requirements of the Hanford Facility Dangerous Waste Permit (Permit).

B.3 Scope

This WAP discusses sampling and analysis of waste necessary for the 242-A evaporation process including acceptance of Double-Shell Tank (DST) feed, process control and characterization of newly generated dangerous waste streams.

Waste Feed Acceptance Process

Determines the acceptability of DST aqueous waste at the 242-A Evaporator and operating capabilities prior to acceptance of the waste at the 242-A Evaporator for treatment. Refer to Permit Addendum B. section B.7.

Secondary Waste Sampling and Analysis

Describes the sampling and analyses used to characterize the secondary waste streams generated from the treatment process and to characterize waste generated from maintenance and operations activities. In addition, the rationale for analyses is included. Characterization and designation of wastes generated from maintenance and operations activities are conducted pursuant to WAC 173-303-170 (generator requirements) and are not subject to the permit requirements of WAC 173-303-800. These descriptions are included in this WAP for purposes of completeness, but are not enforceable under permit authority. Refer to Permit Addendum B, section B.8.

Process Control Aqueous Waste Sampling and Analysis

Describes sampling and analyses used to characterize the waste feed during the evaporation process to ensure proper management of the evaporation process. Refer to Permit Addendum B, section B.8.1.

Analytical Methods and Quality Assurance and Quality Control

Ensures the collection of representative samples and reproducibility, detection limits, accuracy and precision of analysis activities. Refer to Permit Addendum B, section B.12.

B.4 242-A Evaporator Process Description

The 242-A Evaporator, located in the 200 East Area of the Hanford Site, separates the incoming waste from the DST System, Operating Unit Group 4, into two dangerous aqueous waste streams as described

DRAFT

in the following paragraph. The 242-A Evaporator also generates utility waste streams such as cooling water and steam condensate, which do not designate as dangerous waste. Description of the waste processed by the 242-A Evaporator is described in Section B.5.

The 242-A Evaporator process uses a conventional forced-circulation, vacuum evaporation system to concentrate mixed waste solutions from the DST System tanks. The incoming stream is separated by evaporation into two liquid streams: a concentrated slurry stream and a process condensate stream. The slurry contains the majority of the radionuclides and inorganic constituents. After the slurry is concentrated to the desired specific gravity and/or volume, the slurry stream is pumped back to the DST System and stored for further treatment. Vapor from the evaporation process is condensed, producing process condensate, which is primarily water with trace amounts of organic material and radionuclides. The process condensate is transferred to LERF, Operating Unit Group 3, for storage and treatment. Vacuum for the evaporator vessel is provided by two steam jet ejectors, producing a condensate from the steam jet ejectors and a gaseous stream containing non-condensable waste constituents in the evaporator overhead vapor stream. This gaseous stream is combined with gaseous vessel vent stream, and the gaseous process condensate tank exhaust stream. The combined gaseous stream is then exhausted through one emission point referred to as the “vessel vent” exhaust. The 242-A Evaporator vessel vent exhaust is filtered for radionuclide particles and discharged through an exhaust stack. Figure B.1 shows a simplified schematic of the 242-A Evaporator process. A more detailed description of the 242-A Evaporator process is provided in Permit Addendum C, Process Information.

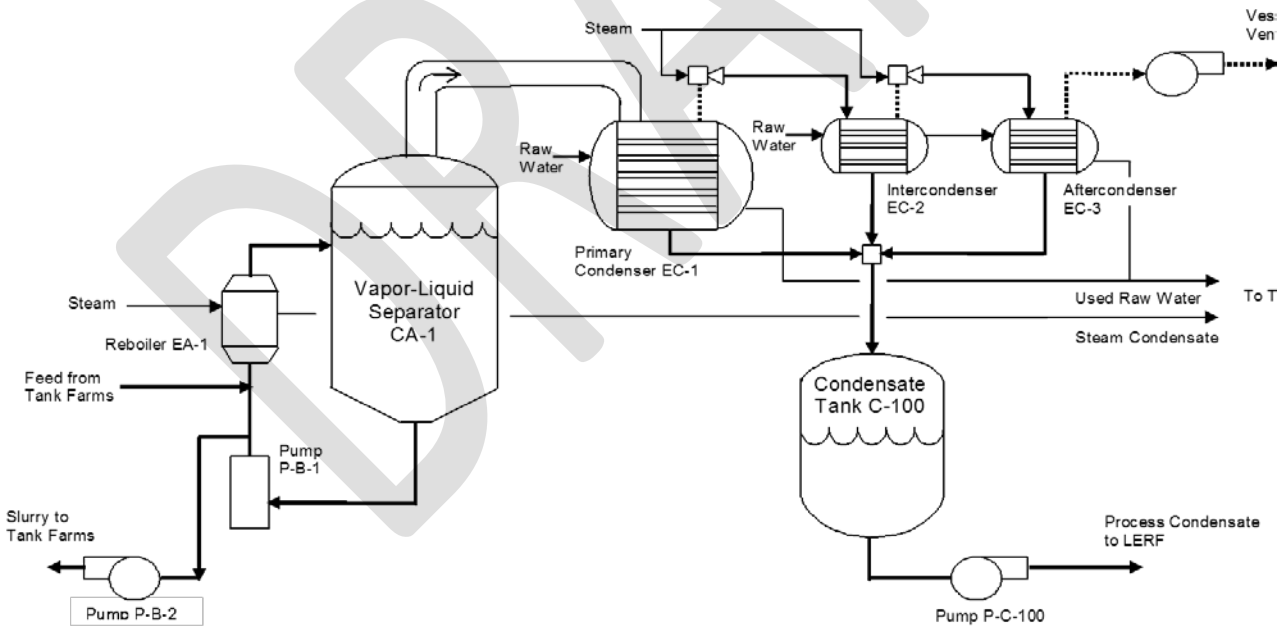

Figure B.1. 242-A Evaporator Simplified Schematic

B.5 Waste Feed Identification

All of the waste accepted by the 242-A Evaporator comes from DST System. The waste in the DST System tanks consists of legacy waste (i.e., wastes generated and in storage as of the effective date of mixed waste regulation in the State of Washington), or is received from onsite generators, which characterize the waste before transfer to the DST System. Selection of candidate feed tanks is outside the scope of this WAP and based on waste management needs within the DST System.

Waste characterization of the identified candidate feed tanks is based on analytical data and/or process knowledge. The data are used for evaluation against 242-A Evaporator waste acceptance criteria and for optimum DST waste management before the final tank selection and waste acceptance decision is made. Candidate tanks are sampled and analyzed for acceptance criteria and campaign process control parameters for the 242-A Evaporator. Two or more candidate tanks may be selected for one 242-A Evaporator campaign and the waste may be blended within the DST System prior to transfer to 242-A Evaporator. In this case sampling and analysis may occur after blending or be based on samples from the candidate tanks before blending. If data are based on samples from candidate tanks before blending, a compatibility/mixing study may be performed to ensure no adverse reactions occur within the DST System. (For further details, see Permit Addendum B, section B. 2.2.2 in the DST System Operating Unit Group 12 WAP).

B.5.1 General Constituent Description

The 242-A Evaporator manages only mixed wastes from the DST System, which consists of mixed waste received from various Hanford Site activities. Liquid wastes managed in the DST tank systems are radioactive aqueous solution containing dissolved inorganic salts such as sodium, potassium, aluminum nitrates and nitrites, and hydroxides. The mixed waste in some tanks has detectable levels of heavy metals such as lead, chromium, and cadmium. The radionuclide content includes fission products such as Sr-90 and Cs-137 and actinide series elements such as uranium and plutonium. Small quantities of ammonia and organics, such as acetone, butanol, and tri-butyl phosphate, could be present. Additionally small incidental amounts of insoluble solids may be transferred to the 242-A Evaporator as the result of waste mixing during the transfer process.

Waste managed in or received by the DST System may be chemically adjusted to ensure the waste is compatible with materials used for construction of the waste tanks and the 242-A Evaporator. In some cases chemical adjustment of pH may occur by the generator prior to transferring waste to the DST System. The physical consistency of the waste in the DST System ranges from liquid supernatant to thick sludge. Waste fed to the 242-A Evaporator is supernatant taken from the DST System. Sludge from the DST System is not processed through the 242-A Evaporator. Refer to Permit Addendum B, section B.2.2.13 and B.3.1 of the Operating Unit Group 12 WAP.

The slurry which results from treatment of DST waste in the 242-A Evaporator is an aqueous solution containing the same radionuclide and hazardous constituents as the feed stream with increased concentrations of non-volatile organics and inorganic constituents. Most of the volatile constituents of the 242-A Evaporator feed are separated into the process condensate. The process condensate is a dilute aqueous solution with ammonia and volatile organics with trace quantities of radionuclides and inorganic constituents. The slurry may also contain an increase in solids due to the liquid volume reduction.

B.5.2 Classification of Waste

The waste processed at the 242-A Evaporator is classified as a mixed waste because it contains radioactive components and a chemical component that designates as a dangerous waste. The waste is designated and carries the appropriate dangerous waste codes for which the wastes designate as documented in the waste analysis plan for Operating Unit Group 12. Refer to Permit Addendum B, section B.3.1.1 (DST Tank Systems).

The secondary waste generated as the result of the 242-A evaporation process includes two waste streams (slurry and process condensate) designated as dangerous waste. The concentrated slurry and process

DRAFT

condensate are mixed waste since they are derived from the treatment of the DST listed dangerous waste. The slurry and process condensate waste streams are listed dangerous wastes, since they are derived from treatment of F001-F005 listed waste from the DST tank systems. They may also exhibit one or more dangerous characteristics. Analysis of utility streams which do not contact mixed waste solutions, such as cooling water and steam condensate, are conducted per the requirements of the 200 Area Treated Effluent Disposal Facility (TEDF), which receives these streams, and the generator designation requirements of WAC 173-303-170. These analyses are not discussed in this plan because these streams are not dangerous waste under WAC 173-303 and any waste sampling and analysis for purposes of designation would be conducted pursuant to WAC 173-303-170, generator requirements, which are not governed by this Permit.

B.5.3 Dangerous Waste Numbers

The 242-A Evaporator is specifically designed to accept DST dangerous waste directly from tank 241-AW-102 from the DST System. Waste acceptable for transfer to the 242-A Evaporator may designate for any of the dangerous waste numbers found in the 242-A waste acceptance criteria.

Table B.1 lists the dangerous waste numbers expected to be applicable to the process condensate. The process condensate is designated with the dangerous waste numbers F001 to F005 because the process condensate is derived from treatment of DST System waste, which was or is generated from sources satisfying the source definitions for F001 through F005 waste listings.

Table B.1. Waste Designation for Process Condensate

Waste number	Characteristic/Source	Basis for designation
F001	Spent halogenated solvents	Derived from F001 waste
F002	Spent halogenated solvents	Derived from F002 waste
F003	Spent non-halogenated solvents	Derived from F003 waste
F004	Spent non-halogenated solvents	Derived from F004 waste
F005	Spent non-halogenated solvents	Derived from F005 waste

The slurry waste stream produced at the 242-A Evaporator is also a dangerous waste and in addition to the F001 – F005 dangerous waste numbers may have one or more applicable characteristic dangerous waste numbers. For further details, see the DST System Operating Unit Group 12, WAP Addendum B, sections B.2.1.2.2 and B.3.1.1.1.

B.6 Waste Acceptance Process

This section describes the actions performed before every campaign to identify candidate waste feeds and to determine if the waste in the candidate waste is acceptable for treatment at the 242-A Evaporator. Because initial acceptance of the process condensate at LERF is based on completion of a waste stream profile using candidate feed tank data, LERF waste acceptance criteria is also considered in the selection of a candidate waste feed (refer to Permit Addendum B, sections B.2 and B.4 of Operating Unit 3). DST wastes are not accepted for treatment in the 242-A Evaporator unless the 242-A Evaporator waste acceptance criteria are satisfied, and the process condensate projected to be generated via treatment in the 242-A Evaporator satisfies the ETF/LERF waste acceptance criteria.

The 242-A operates as a batch treatment system, and feed for each evaporator campaign must follow this waste acceptance process for waste verification and waste acceptance for each evaporator campaign. Therefore, there is no need to periodically re-evaluate any waste stream.

Evaluation of data produced from the sampling and analysis of candidate waste feeds for each campaign are documented in the campaign specific process control plan, process memo and associate engineering calculations. Process control plans are prepared to describe and define the specific controls required for a planned campaign. Each process control plan includes the information described below:

- Waste Feed Description - describes the source, volume, and any potential mixing or blending data.

- Campaign Objectives – details the waste reduction volume limits and specific gravities expected for each campaign.
- Candidate Feed Tank Sampling and Analysis Evaluation– describes the actual sampling and analysis data for each candidate feed tank for each campaign. This evaluation includes review of data to the 242-A waste acceptance criteria, safety basis controls for operation of the 242-A Evaporator, and calculation of the expected process condensate constituents for review to the LERF WAP.
- Process Controls and Campaign Recommendations – describes the limits and conditions for each campaign based on the campaign objectives and candidate feed tank analytical data.

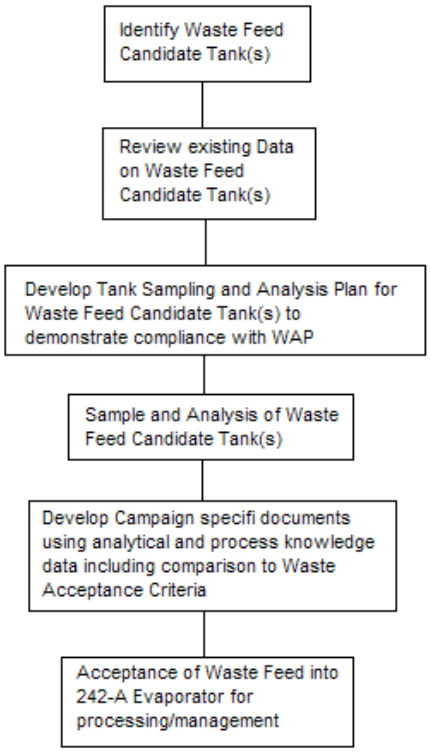

Figure B.2. 242-A Evaporator Waste Acceptance Process

B.7 Waste Feed Acceptance Process

For each 242-A Evaporator campaign, DST System tanks are selected as the source of candidate waste feed, based on process knowledge of chemical properties with respect to waste acceptance criteria (Section B.10). After a candidate tank is selected, the waste in the tank is sampled and analyzed and the data evaluated to confirm waste acceptability for treatment in the 242-A Evaporator, to predict concentrations in the Process Condensate and reviewed for acceptance to the LERF WAP (refer to Permit Addendum B, sections B.2 and B.4 of Operating Unit 3). Every candidate feed tank is sampled and analyzed to confirm the candidate waste feed satisfies the 242-A Evaporator waste acceptance criteria. Waste may be staged for candidate tank sampling in any DST, including tank 241-AW-102.

Once candidate tanks are sampled, the candidate tank is restricted from receiving further waste transfers, with the exception of minor water additions from flushing activities until the campaign is completed or the candidate tank is no longer identified as a candidate tank.

B.7.1 Identification of Candidate Waste Feed

Certain DST System tanks are selected as 'candidates' for waste to be processed in the 242-A Evaporator. Initial determination of possible feed tanks is outside the scope of this WAP and based on waste management within the DST System.

B.7.2 Candidate Waste Feed Acceptance

Once possible feed candidate tanks have been identified the method for determining if the waste in a candidate feed tank is acceptable for processing is followed. This section describes the waste acceptance process.

The following activities are performed to evaluate whether a potential candidate waste feed is likely to meet the 242-A Evaporator waste acceptance criteria.

- Evaluate Potential for Energetics/Uncontrolled Chemical Reactions: There must be no potential exothermic chemical reactions of waste constituents that occur below 168°C (334.4°F), and the ratio of exotherm-to-endotherm energy must be less than 1 (see sections B.10.1.1 and B.10.1.2).
- Evaluate Potential for Separable Organic Phase: Only DST wastes without separable organic phases may be accepted for treatment in the 242-A Evaporator (see sections B.10.1.3).
- Calculate Process Condensate Ammonia and Organic Concentrations: Radionuclide, ammonia, and -volatile organic concentrations are needed for the LERF waste profile sheet (refer to permit conditions applicable to Operating Unit 3 of this permit) (see sections B.8.1 and B.10.1.4).

B.7.2.1 Number of Candidate Feed Tank Samples

Sampling of a candidate waste feed for treatment in the 242-A Evaporator is performed according to the requirements of this WAP. The waste is sampled in the DST tank system, prior to transfer and acceptance at the Evaporator.

Four representative samples of aqueous DST supernatant are adequate to ensure the resulting waste characterization data are of sufficient quality for the data's planned purposes. The data are compared to the 242-A Evaporator waste acceptance criteria, applied to the 242-A Process Control Plan for purposes of predicting process condensate properties, and used for comparison to the Operating Unit Group 3 WAP with respect to LERF liner compatibility. The rationale for this statement is that the estimates of the variability of DST content wastes properties is sufficiently defined and consistent that four samples work. No solid samples are collected.

One surface sample to address the possible existence of a separable organic layer and three subsurface samples are obtained from each waste candidate feed tank or obtained from the tank after the waste is blended. The identified campaign specific candidate tanks or the 242-A Evaporator feed tank 241-AW-102 provide a representative set of data for determining waste acceptance in the 242-A Evaporator. This is in part due to the consistency in the type of feed waste and the source of the waste. Waste in candidate feed tanks must first be accepted into the DST system by meeting the corresponding DST tank system waste acceptance criteria. Waste management in the DST system results in supernatant that is relatively homogeneous within each tank although some concentration gradients may exist vertically within each tank caused by the transfer history and limited mixing actions within the DST. Lateral stratification is not expected since no force exists to cause this.

B.7.2.2 Assessing Candidate Feed Tank Analysis

Candidate feed tank sampling and analysis data and the 242-A Evaporator waste acceptance criteria in Section B.10 are used to determine whether a candidate waste feed is acceptable for treatment in the 242-A Evaporator. Based on the results of this determination, one of four possible actions may be taken.

DRAFT

- The waste is acceptable for processing at the 242-A Evaporator without further actions.
- The waste is unacceptable for processing as a single batch, but is acceptable if blended with other waste to be processed or the waste can be pre-treated as necessary to fully satisfy the 242-A waste acceptance criteria.
- Perform further evaluation to determine if action limit can be protected through mid-campaign monitoring/sampling and/or process adjustments.
- The waste is unacceptable for processing, and no acceptable pre-treatment or blending options can be identified.

If the waste is suitable for evaporation, it will be transferred to the feed tank (241-AW-102) for storage prior to actual processing.

B.8 Secondary Waste Sampling and Analysis

Five waste streams are generated as the result of the 242-A Evaporator process: Process Condensate; concentrated waste slurry; steam condensate; cooling water; and 242-A-81 back flush water.

Sampling of the process condensate is required for confirmation that the waste meets the LERF waste acceptance criteria with respect to the compatibility with the LERF liner and process control of the LERF system. (Refer to permit conditions in Operating Unit Group 3 (LERF/ETF) of this permit)

The 242-A Evaporator steam condensate, cooling water and 242-A-81 back flush water waste streams have been determined to not designate as dangerous waste are not subject to requirements of this permit (Specifically, wastes that do not designate as dangerous wastes pursuant to WAC 173-303-070). Samples from these waste streams are taken for process control for the receiving facility and are not detailed in this WAP.

B.8.1 Process Condensate Waste Sampling Process

Sampling and analysis required by the LERF waste acceptance process in Operating Unit Group 3 of this permit would normally be outside the scope of this WAP. However, confirmation samples of process condensate can be collected at 242-A Evaporator during a campaign or at LERF after the campaign is completed, depending on programmatic needs determined before the start of each campaign.

Before the start of a 242-A Evaporator campaign, the decision whether process condensate sampling will be performed at the 242-A Evaporator or at LERF is documented in the process control plan. Planning for process condensate sampling at the 242-A Evaporator (i.e., number of samples, when samples are taken, etc.) is completed before starting the campaign.

The process control plan and LERF waste stream profile may be used as the method of certification of acceptance to LERF WAP. (Refer to Permit Addendum B, sections B.2 and B.4 of Operating Unit Group 3). Samples are then used to confirm that process condensate satisfies requirements of the LERF WAP during the campaign.

B.8.1.1 Determining the Number of Process Condensate Samples

The purpose of sampling the process condensate stream at the 242-A Evaporator is to confirm that the stream is acceptable for treatment at the ETF. Before starting a 242-A Evaporator campaign where sampling will be performed at the 242-A Evaporator instead of LERF, characterization of the process condensate will be developed based on process knowledge. Process knowledge includes previous process condensate analysis; estimated concentrations based on candidate feed tank analysis, etc and are documented in the process control plan. Dangerous waste sampling of the process condensate stream at the 242-A Evaporator is performed during the campaign to confirm the characterization. Sampling frequency is determined using the following equation:

Number of process condensate = N + 1 samples required (per campaign). Where N is the number of candidate feed tanks to be processed during the campaign.

DRAFT

For example, a campaign processing waste from only one candidate feed tank would require two samples, while a campaign processing waste from three candidate feed tanks would require four samples. Sampling is spread approximately evenly through the campaign, allowing for operational events such as unexpected shutdowns and planned maintenance outages. This sample frequency represents a confirmation rate of about one sample every 5 to 8 days of processing. This is reasonable based on the relatively homogeneous tank waste feed and the more or less steady state of the evaporation operation. Therefore, the process condensate waste stream should also be relatively homogeneous, and multiple samples are not necessary to document or account for waste stream variability. A minimum of two samples is taken to meet the LERF WAP.

B.8.1.2 Assessing Process Condensate Analysis

The process condensate sample results are compared to the LERF waste acceptance criteria specified in Addendum B, Table B.1 of Operating Unit Group 3.

B.9 Process Control Aqueous Waste Sampling and Analysis

For information on process condensate sample collection, including the number and types of sample bottles, sampling QA/QC, etc., refer to this Permit Addendum B, section B.10.2.

B.10 242-A Evaporator Acceptance Criteria

Processing or process control criteria are maximum and/or minimum values of a waste analyte that, if exceeded, alert the operator that management of the waste requires further attention. The rationale for selecting a given analyte for inclusion in this WAP include: waste acceptance criteria, required by WAC 173-303-300, or a process control parameter indicated in this section. The rationale is provided for each test and/or analyte.

Additional analyses (such as specific gravity and radionuclide analysis) of the feed tanks, process condensate, and other streams are performed to ensure that the facility is operating within established parameters.

B.10.1 Candidate Feed Tank Waste Acceptance Criteria

The following sections discuss waste acceptance criteria for candidate feed tanks to be processed in the 242-A Evaporator.

B.10.1.1 Exothermic Reactions

WAC 173-303-395(1), requires waste handling be conducted to prevent an uncontrolled reaction that could damage the tank system structural integrity or threaten human health or the environment. To evaluate the possibility of an uncontrolled reaction at the elevated temperatures in the evaporator vessel, a differential scanning calorimeter (DSC) test is performed on sample of all candidate waste to be processed. DSC measures the amount of heat absorbed or released by a sample as the temperature is increased. Waste exhibiting exotherms below 168°C, (335 ^{o}F) or with an absolute value of the exotherm-to-endotherm ratio greater than one, will not be processed in the 242-A Evaporator without further technical evaluation and any necessary changes to the waste acceptance criteria in this WAP through the permit modification process.

B.10.1.2 Compatibility (Waste mixing)

WAC 173-303-640(10) and WAC 173-303-395 (1), requires waste handling be conducted to prevent an uncontrolled reaction that could damage the tank system structural integrity or threaten human health or the environment. Waste feed is mixed or blended in the DST System prior to transfer to the 242-A Evaporator and controlled under the DST waste compatibility program (see Permit Addendum B, sections B.2.1.2.2 and B.3.1.1). Analysis of waste while in the DST system is made to verify there will be no adverse effects because of the contents of different waste types in the candidate tanks or the 242-A Evaporator feed tank (241-AW-102). This compatibility assessment is performed according to requirements applicable to dangerous waste management units in Operating Unit Group 12 (DST Tank

Systems), Permit Addendum B, sections B.2.1.2.2 and B.3.1.1 and is outside the scope of this WAP. It is described only for completeness. As samples from each of the planned waste sources are mixed, observations are made to note any changes in color, temperature, clarity, or other visually determinable characteristic. This would indicate an unexpected chemical reaction that might have an impact on 242-A Evaporator operations. If such visible changes are observed when mixing samples, the waste would not be processed in the 242-A Evaporator without further technical evaluation and any necessary changes to the waste acceptance criteria in this WAP through the permit modification process.

B.10.1.3 Separable Organics

The waste surface layer sample collected from each candidate feed tank or combined feed in 241-AW-102 is visually inspected and analyzed for %H_2O to determine whether separable organics are present in the waste and requires the waste feed to be rejected for processing or allows waste processing. The % H_2O is required to determine if the whole sample is organic and cannot be discerned visibly. The action limit of 25% water will indicate if the sample is all organic. Results of the visual inspection and testing are used together to determine if the waste can be accepted at the 242-A Evaporator for processing. If there is a separate visible organic layer in the candidate feed tank samples then the waste transfer to 242-A Evaporator must incorporate engineering controls to eliminate (exclude) the organic layer during the transfer.

B.10.1.4 Organic Constituents

Because storage and treatment of the process condensate generated at the 242-A Evaporator is limited to transfer to the LERF surface impoundments (basins), the 242-A Evaporator will not accept waste whose data review does not support treatment and storage in Operating Unit Group 3 (LERF/ETF) dangerous waste management units of the process condensate that will be generated. To predict the concentrations expected in the process condensate, the waste feed is sample and analyzed for organics and the results are then used to predict the concentrations in the campaign specific process condensate. The level of volatile organics in the feed is limited to ensure organic constituents that transfer to the process condensate are compatible with the LERF liner (see Permit Addendum B, Table B.1 of Operating Unit Group 3).

B.10.1.5 Ammonia

Because storage and treatment of the process condensate generated at the 242-A Evaporator is limited to transfer to the LERF surface impoundments (basins), the 242-A Evaporator will not accept waste whose data review does not support treatment and storage of the process condensate that will be generated. To predict the concentrations of ammonia expected, the process condensate is sampled and analyzed for ammonia.

B.11 Sample Collection and Analysis

Samples to support waste processing within the 242-A Evaporator, waste acceptance from DST tank systems and monitoring are performed during each campaign following requirements of this WAP and as applicable to the DST System, Operating Unit Group 12 Addendum B, sections B.2.2.2 and B.3.1.1.

This section discusses sampling and analysis, including sampling procedures, sample collection points, sample quality assurance/quality control (QA/QC), and selection of analytes for sampling and analysis of candidate feed tank and process condensate samples for analyses required under this WAP. Candidate feed tank waste is sampled and analyzed before the start of each 242-A Evaporator campaign to determine waste can be accepted and campaign specific process conditions. Process condensate samples are taken at the 242-A Evaporator only if the decision is made before the start of the campaign that sampling will be done at the 242-A Evaporator instead of LERF.

B.11.1 Candidate Feed Tank Sampling and Analysis

B.11.1.1 Candidate Feed Tank Sample Collection

Sampling of DST wastes using a grab sampling method (e.g. "bottle on a string method," (ASTM E300-86)) is appropriate to assure the resulting samples are representative of the DST tank contents.

The number of lateral sampling locations in candidate feed tanks is limited by the availability of tank risers providing access into the tank. Generally, only a few risers in each tank are actually available for sampling because the risers are dedicated to instrumentation or other uses. Sampling within a vertical column is generally limited only by the depth of supernatant waste in the tank (no solid samples are collected). The criteria in Table B.2 are used when determining the specific sampling locations.

Riser selection is based on accessibility, presence of installed equipment requiring removal and similar cost and ALARA considerations. Previous waste feed tank sampling campaigns used two or more risers, and showed that negligible lateral variability exists in the DST supernatants; therefore, only one riser will be used. Sample depths are determined by dividing the tank supernatant into 3 equal increments and determining depths which meet the criteria given in Table B.2.

B.11.1.2 Candidate Feed Tank Sampling Quality Assurance and Quality Control

For each candidate feed tank sample, a sample solution is drawn from the sample riser using one or more sample bottles. Sample bottles are pre-cleaned, amber-colored glass bottles sealed with Teflon* caps or septum caps. The exceptions to the sample bottle requirements are: a clear bottle is used for the surface sample to determine the existence of separable organics and the bottle for VOA analysis must be sealed with a septum cap.

For candidate feed tank sampling quality control, one field blank, consisting of one or more sample bottles, is taken during the sample event. Field blanks are inserted at least 1-foot into the head space through any one of the sample risers used during the sample event. One trip blank, also consisting of one or more sample bottles, is taken during each sample event. Trip blanks are analyzed as independent samples for VOA. Field and trip blanks use the same types of sample bottles as the actual samples and are filled with reagent-grade water before shipment to the field.

Preservatives are not used with candidate feed tank samples because of concerns with high radiation exposure that would result from additional handling of sample solutions. It is not practical to refrigerate the bulky, shielded sample pigs and shipping containers. Biological activity, generally the largest problem in environmental samples, is unlikely in candidate feed tank samples because of the high salt content, pH, and radioactivity of the samples.

The chain of custody is documented on a data sheet that includes a unique sample number, date and time sample was taken, custody seal number, and signature of the sampler. When possession of the sample is transferred to other persons, such as the shipper or laboratory, the signature of the relinquisher and receiver are recorded, along with date and time of the transfer. The receiver at the laboratory also documents on the data sheet that the sample seal number is correct and the seal is intact. The chain-of-custody data sheets are included in the facility operating record.

B.11.1.3 Deviations from Specified Sampling Practices

The WAP requires ASTM E 300 'bottle on a string procedure' for sampling (ASTM E300-86). Due to high radiation fields, some deviations to the standard have been necessary to implement safely the sampling practices in the field. These deviations are documented below.

- Requirement: The sampling apparatus be filled and allowed to drain before drawing the sample.

  Deviation: Sampling personnel lowers the sampling apparatus to the specified level and collects the sample. To pour the contents out and resample would encourage the spread of radiological contamination and additional whole body and extremity radiation exposure.

- Requirement: Bottles and jars may be made of clear or brown glass or polyethylene with necks shaped to receive glass stopper or a screw cap made of metal or plastic material.

---

*Teflon is a trademark of E.I. DuPont de Nemours & Company

Deviation: Sampling personnel uses clear or amber glass with necks shaped to receive rubber stoppers. Glass stoppers were used at one time but resulted in broken sample bottles during the removal of the glass stoppers from the glass bottles.

- Requirement: Stopper and label bottles immediately after taking the samples and deliver them to the laboratory.

Deviation: Sampling personnel screws on the bottle cap after the sample has been collected. Because of the alkalinity of the tank waste sample labels will not stay on bottles after samples are collected. Therefore, sample bottles are etched with the sample numbers before the samples are collected. The samples are shipped to the laboratory as soon as resources are available, within three days of sample collection.

- Requirement: Select wiping cloths so that lint is not introduced, contaminating the samples.

Deviation: Sampling personnel uses damp cotton towels to wipe down sample bottles after the sample bottles have been capped. The intent is to remove any waste that may have been deposited on the bottle during the sampling event to minimize contamination and personnel exposure.

- Requirement: To prevent the loss of the liquid during shipment and to protect against moisture and dust, cover the closure of the glass bottle with plastic caps, which have been swelled in water, wiped dry, placed over the top of the stoppered bottle, and allowed to shrink tightly in place. Screw-top bottles are recommended. The cap should be lined with material inert to the sample. The screw caps should be secured by use of adhesive tape or similar material.

Deviation: Sampling personnel uses screw caps and 4-mil plastic bags. The cap is Teflon-lined which is inert to the sample. The sample bottle is placed inside a plastic bag, which is placed inside a steel pig (or sample pig). The steel pig is placed inside a shipping pig. The screw cap is not secured with adhesive tape. Securing the sample bottle caps with tape would present the laboratory with difficulty of removing the caps remotely (in the hot cell). If the sample leaks from the sample bottle, it is trapped in the plastic bag. The custody seal is placed on the shipping pig per procedure.

- Requirement: All sampling apparatus and closures shall be clean, dry, free of contaminants, and constructed of materials that are inert to the product to be sampled.

Deviation: Prior to sampling, sampling equipment such as the sample holder shall be cleaned using a procedure that is consistent with SW-846, *Test Methods for the Evaluation of Solid Waste, Physical/Chemical Methods*, sampling equipment cleaning protocol. The bottles with screw caps are washed and certified and are not opened until at the time of the sampling event. The bottles are opened when the previous sample is completed so that only one bottle is opened at the time of sampling to insert the rubber stopper from the sample holder. The stopper and bottles are constructed from materials that are inert to the product to be sampled.

B.11.2 Process Condensate Sampling and Analysis

B.11.2.1 Process Condensate Sample Collection

Process condensate samples, when performed at 242-A Evaporator instead of LERF, are taken from the process condensate transfer line in the condenser room of the 242-A Building. Grab sampling is performed during the campaign at the SAMP-RC3-2 sampler or other sample port by opening a valve and allowing a small volume of process condensate to flush valve and line/piping and then collecting the required volume into the prepared sample bottles using appropriate labeling and chain of custody. Samples of process condensate are collected in a manner to produce a representative sample. Analysis methods used are consistent with SW-846 procedures (EPA 1996) as listed in Table B.3.

DRAFT

B.11.2.2 Process Condensate Sampling Quality Assurance and Quality Control

For information on process condensate sample collection, including the number and types of sample bottles, sampling QA/QC, etc., refer to waste analysis plan requirements for LERF/ETF (refer to this Permit Addendum B, section B.8).

B.11.3 Analyte Selection and Rationale

The candidate feed tanks waste sample analysis required in Table B.3 are established based on requirements of WAC 173-303-300 and must be conducted to satisfy requirements in this WAP. Table B.2 also contains the rationale for these parameters being selected. Section B.6 provides additional detail on the rationale.

For information on process condensate sample analyte selection and rationale, refer to Permit Addendum B, section B.4 of Operating Unit Group 3.

DRAFT

Table B.2. Candidate Feed Tank Sample Point Selection

Number of samples	Location of sample points
Four samples, no layering suspected	One surface sample to address the potential for a separable organic layer and three subsurface samples: one sample each obtained from the upper third (near the half way point), one sample in the middle third and one sample in the lower third (near the lower limit) of the supernatant layer.
Four samples, layering suspected	One sample taken from the waste surface to address the potential for a separable organic layer. Three samples targeting the expected midpoint of the suspected layers. If more than three layers are suspected, The larger layers have sampling priority.

Table B.3. Analytes for Candidate Feed Tanks

Parameter	Test technique	Analyte (CAS #)	Rationale
Exotherm/ Endotherm	Differential scanning calorimeter	Temperature and energy	Verify the waste will not undergo an exothermic reaction (Section B.10.1.1).
Compatibility test	Mixing and compatibility study	Visual physical changes	Verify the waste is chemically compatible (Section B.10.1.2).
Organic compounds	Gas chromatograph/ mass spectrometer	Volatile Organics Analytes(VOAs) and Semi-Volatile Organics Analytes (semi-VOAs) using standard laboratory instrument library	Used in calculations to prevent compatibility problems with the LERF liner (Section B.10.1.4).
TIC/TOC	Carbon coulometric detector	Total carbon, Total inorganic carbon	Used to prevent compatibility problems with the LERF liner (Section B.10.1.4).
Separable organics	Visual inspection	Visual inspection	Process control information needed to evaluate campaign parameters and status. (Section B.10.1.3)
	Thermogravimetric analysis (TGA)	$\%H_2O$	
Ammonia	Ion selective electrode or Ion chromatography	Ammonia (7664-41-7)	To prevent compatibility problems with the LERF liner (Section B.10.1.5).

B.12 Analytical Methods and Quality Assurance and Quality Control

This section provides information on the analytical methods and QA/QC for candidate feed tank samples, including discussions concerning laboratory selection and analytical methods. For information on process condensate analytical methods and QA/QC, refer to Operating Unit Group 3 (LERF/ETF), Addendum C.

B.12.1 Laboratory Selection

Due to the high radiological activity level expected to be associated with waste that will undergo sampling and analysis according to this WAP, all analysis will be conducted at the 222-S laboratory.

B.12.2 Analytical Methods

The analytical methods that must be followed for sampling of the candidate feed tanks pursuant to this WAP are included in Table B.3. Because of the high radioactivity, the analytical method will in some cases deviate from those in national standards such as *Test Methods For Evaluating Solid Waste*, SW-846 (EPA 1996) and *Standard Methods for the Examination of Water and Waste Water* (AWWA 2005). For example using a smaller sample size, or equivalent smaller scale equipment may be required. Performance-based specifications rather than procedure-based specifications are used for determining the appropriate analytical methods. This allows for necessary adjustments to the methods for Hanford Facility-specific issues; related to high radioactivity of the sample matrix, while ensuring acceptable data quality.

<u>Laboratory Quality Assurance and Quality Control</u>

Data from analysis of candidate feed tank samples conducted as part of this plan must satisfy the data quality requirements contained in Table B.4 to be considered acceptable for decision-making purposes. Quality control check samples (i.e., calibration samples and/or laboratory control samples) generally are performed once per sample event (e.g., once for all samples from one candidate feed tank). Matrix spike and duplicate analysis are performed once per sample event for all methods except differential scanning calorimetry (DSC). A duplicate analysis is performed for DSC analysis to determine method precision. Accuracy for DSC is evaluated by using the laboratory control standard.

All analytical data will be defensible and will be traceable to specific, related quality control samples and calibrations.

DRAFT

Table B.4. Analytical Methods for Candidate Feed Tank Stream Analytes

Category	Analyte (CAS #)	Performance-based analytical methods	Method[1]
Organics	VOAs using standard laboratory instrument library	Purge and trap and GC/MS (VOA)	SW-846 Method 8260B
	semi-VOAs using standard laboratory instrument library	Solvent extraction and GC/MS (semi-VOA)	SW-846 Method 3520C and 8270C
Inorganic	Ammonia (7664-41-7)	Mirco-distallation/ ion chromatography or Ion selective electrode	EPA Method 300.7 (IC) or EPA Method 350.3 (ISE)
Other	Total carbon	Combustion with C_T/TOC coulometric detection	ASTM-D4129 or SM 5310B
	Total Inorganic Carbon	Persulfate oxidation with IC_T/TOC coulometric detection	Lab SOP SM 5310C
	Exotherm/Endotherm	Differential scanning calorimeter	N/A
	Compatibility test	Mixing and compatibility study (Lab specific)	N/A
	Visual inspection	Visual inspection (Lab specific)	N/A
	$\%H_2O$	Thermograimetric analysis (TGA) (Lab specific)	N/A

Notes
1. EPA-SW846 methods with the most recent revision are preferred.

B.13 References

ASTM, 1986, *Standard Practice for Sampling Industrial Chemicals*, ASTM E300-86, American Society for Testing and Materials, West Conshohocken, Pennsylvania, updated periodically.

ASTM, 1988, *Total and Organic Carbon in Water by High Temperature Oxidation and Coulometric Detection*, ASTM D4129-88, American Society for Testing and Materials, West Conshohocken, Pennsylvania, updated periodically.

AWWA, 2005, *Standard Methods for the Examination of Water and Wastewater*, 17th edition, American Public Health Association/America Water Works Association, Washington, D.C., updated periodically.

EPA, 1994a, *Waste Analysis at Facilities that Generate, Treat, Store, and Dispose of Hazardous Wastes, A Guidance Manual*, PB94-963603, OSWER 9938.4-03, U.S. Environmental Protection Agency, Washington D.C.

EPA, 1996, Test Methods for Evaluation Solid Waste Physical/Chemical Methods, SW 846, 3rd Edition, as amended by Updates I, IIA, IIB, III, and IV, U.S. Environmental Protection Agency, Washington, D.C.

WAC 173-303, 2007, "Dangerous Waste Regulations," Washington Administrative Code, as amended.

This page intentionally left blank

DRAFT