ISSUED BY
RPP-WTP PDC

R11202140

REMOTE-CHANGE HEPA FILTER HOUSING Data Sheet: 24590-HLW-MAD-PJV-00004

MR No.	24590-QL-MRA-MKH0-00002
Plant Item No.	24590-HLW-MK-PJV-HEPA-00004A
Rev No.	8

1	Project:	RPP-WTP	Bldg./Rm #	HLW / H-0104	Manufacturer:	Flanders/CSC
2	Project No:	24590	Elevation	0'-0"		
3	Site:	DOE Hanford	Supporting Calculations	24590-HLW-MAC-PJV-00002	Manufacturer Part No:	*
4	Safety Class	SS				
5	Seismic Category	SC-III	Associated Drawings	24590-HLW-M6-PJV-00002	Quantity Required	1
6	System No.	PJV			Quality Level	Q
7	System Description	24590-HLW-3YD-PJV-00001		Remote Change Specification	24590-WTP-3PS-MKH0-T0003	
8	Description:	HLW Pulse Vent System - Primary "Active" Housing			Environmental Qualification: MILD See Appendix 1 EQ datasheet	

9 DESIGN CONDITIONS

10	Zone Design Temperature- Summer °F	113		Design/Normal Inlet Air Temp. (see Note 4)	114 / 78	°F
11	Site Storage Conditions - Summer °F	113	DB	N/A WB		
12	Housing Interior Chemical Exposure	See Note 2				
13	Site Storage Conditions - Winter °F	(-)23	DB	Radiological dose rate (Note 2 & 6)	3.54E+04	mRad/hr
14	Indoor Design Temperature - Winter °F	59	DB	Rad dose for 40-yr facility life (Note 2 & 6)	1.24E+07	Rad (total)

15 PERFORMANCE RATING

16	Design Flow Rate (CFM)	10,000	Max. Allow. Leakage (CFM/housing)	10 cfm	
17	Maximum Operating Pressure (in. WC)	(-) 80	Leak Test Pressure (in. WC, initial)	(-)120 init. test pressure	
18	Maximum Design Pressure (in. WC)	(-) 120	Assembly Press. Drop w/ Clean Filters (in. WC)	3.75 (see Note 12)	
19	Total Filter Openings Required	6	Weight with HEPA Filters (pounds)		*
20	No. Filters per Bank	5	Weight without HEPA Filters (pounds)		*

21 CONSTRUCTION

22–25 NOTE: This housing unit is paired with 24590-HLW-MK-PJV-HEPA-00004B (Ref. datasheet 24590-HLW-MAD-PJV-00006), orientation as shown:

AIRFLOW »→

inlet | Housing 24590-HLW-MK-PJV-HEPA-00004B | outlet

inlet | Housing 24590-HLW-MK-PJV-HEPA-00004A | outlet

PLAN VIEW

26	Design Housing Manufacturer:	Flanders/CSC	Design Housing Model Number:	*		
27	Housing Construction Method:	All Welded	Max. Housing Dim. (in.): See Note 8	L = *	H = *	W = *
28	Housing Material :	Type 304L Stainless Steel	Housing Material Gauge:	*		
29	Top Panel Material :	Type 304L Stainless Steel	Top Panel Material Gauge:	*		
30	Structural Frame Material :	Type 304L Stainless Steel	Structural Frame Features:	*		
31	Inlet Plenum Total Volume:	*	Outlet Plenum Total Volume	*		
32	Inlet Position: (Top/Side)	Side	Outlet Position: (Top/Side)	Side		
33	Inlet Nozzle Dimensions (inches):	20 in. Diameter, nominal	Outlet Nozzle Dimensions (inches):	20 in. Diameter, nominal		
34	See Notes 5 & 8	11.6 in. Length	See Notes 5 & 8	8.0 in. Length		
35	Inlet Connection Type:	Welded	Outlet Connection Type:	Welded		
36	Inlet Flange Bolt Required:	N/A	Outlet Flange Bolts Required:	N/A		
37	Inlet Flange Bolt Size:	N/A	Outlet Flange Bolt Size:	N/A		
38	Inlet Flange Bolt Material:	N/A	Outlet Flange Bolt Material:	N/A		
39	Inlet Flange Gasket Material:	N/A	Outlet Flange Gasket Material:	N/A		
40	Paint and Finish Material:	N/A	Paint and Finish Material Minimum Thickness:		N/A	

41 HOUSING ACCESSORIES

42	**Accessory Provided**	Yes	No	Accessory Information	
43	Test w/ Inlet Isolation Damper:		X	Damper Provided By:	N/A
44	**See Note 7**			Inlet Isolation Damper Type:	N/A
45				Inlet Isolation Damper Size:	N/A
46	Inlet Transition Ductwork:		X	Inlet Transition Ductwork	N/A
47				Overall Length: (inches)	
48				Inlet Transition Smallest	N/A
49				Inside Dimension: (inches)	
50				Inlet Transition Largest	N/A
51				Inside Dimension: (inches)	
52	Inlet Aerosol Test Port Criteria:	X		Challenge Aerosol Connection Type:	*
53	**See Note 8**			Challenge Aerosol Connection Size:	*
54				Challenge Aerosol Connection Quantity:	*

REMOTE-CHANGE HEPA FILTER HOUSING Data Sheet: 24590-HLW-MAD-PJV-00004

MR No.	24590-QL-MRA-MKH0-00002
Plant Item No.	24590-HLW-MK-PJV-HEPA-00004A
Rev No.	8

1	Project:	RPP-WTP	Bldg./Rm #	HLW / H-0104	Manufacturer:	Flanders/CSC
2	Project No:	24590	Elevation	0'-0"		
3	Site:	DOE Hanford	Supporting Calculations	24590-HLW-MAC-PJV-00002	Manufacturer Part No: *	
4	Safety Class	SS				
5	Seismic Category	SC-III	Associated Drawings	24590-HLW-M6-PJV-00002	Quantity Required	1
6	System No.	PJV			Quality Level	Q
7	System Description	24590-HLW-3YD-PJV-00001		Remote Change Specification	24590-WTP-3PS-MKH0-T0003	
8	Description:	HLW Pulse Vent System - Primary "Active" Housing			Environmental Qualification: MILD See Appendix 1 EQ datasheet	

9 HOUSING ACCESSORIES (continued)

10	Accessory Provided	Yes	No	Total Number of Viewing Ports Required:	N/A	
11	Inlet Viewing Ports		X	Inlet Viewing Port Type:	N/A	
12				Inlet Viewing Port Locations:	N/A	
13				Inlet Viewing Port	N/A	Width
14				Dimensions: (inches)	N/A	Length
15	Internal Fire Suppression:		X	Fire Suppression System Description:	N/A	
16				Accessory Information	1 per bank	
17	Vacuum-Relief Vent Assembly:	X		Number Required:	*	
18				Vacuum-Relief Vent Assembly Setpoint:	*	
19				Vacuum-Relief Vent Assembly Manufacturer:	*	
20				Vacuum-Relief Vent Model Number:	N/A	
21	Test w/ Outlet Isolation Damper:		X	Damper Provided By:	N/A	
22	**See Note 7**			Outlet Isolation Damper Type:	N/A	
23				Outlet Isolation Damper Size:	N/A	
24	Outlet Transition Ductwork:		X	Outlet Transition Ductwork Overall	N/A	
25				Length (inches):		
26				Outlet Transition Smallest Inside	N/A	
27				Dimension (inches):		
28				Outlet Transition Largest Inside	N/A	
29				Dimension (inches):		
30	Outlet Aerosol Test Port Criteria:	X		Challenge Aerosol Connection Type:	*	
31	**See Note 8**			Challenge Aerosol Connection Size:	*	
32				Challenge Aerosol Connection Quantity:	N/A	
33	Outlet Viewing Ports:		X	Total Number of Viewing Ports Required:	N/A	
34				Outlet Viewing Port Type:	N/A	
35				Outlet Viewing Port Locations:	N/A	Width
36				Outlet Viewing Port	N/A	Length
37				Dimensions: (inches)	N/A	
38	Differential Pressure Taps:	X		Differential Pressure Tap Size: (inches)	1/2 (see Note 3)	
39	Drain Connection:	See Note 9		Drain Connection Size: (inches)	1-1/2 (see Note 9)	
40	Drain Connection Valve:		X	Drain Connection Valve Size: (inches)	N/A	
41				PVC Safe Change Bag Type:	N/A	

42 UTILITY REQUIREMENTS

43	Electrical: (volts/phase/hertz)	N/A	
44	Compressed Air:	N/A	
45	Intrumentation Taps:	*	
46	Pressure/Leak Test Ports	*	
47	Air/Aerosol Mixing Test Ports	*	

48 NOTE: See Appendix 2 for locations of test ports. SELLER to provide aerosol injection and sampling lines from housing penetration to connection
49 point located on Appendix 2 sketches. Aerosol injection and sampling lines shall be stainless steel pipe per specification
50 24590-WTP-3PB-P000-TS11Z, or equal.

REMOTE-CHANGE HEPA FILTER HOUSING Data Sheet: 24590-HLW-MAD-PJV-00004

MR No.	24590-QL-MRA-MKH0-00002
Plant Item No.	24590-HLW-MK-PJV-HEPA-00004A
Rev No.	8

1	Project:	RPP-WTP	Bldg./Rm #	HLW / H-0104	Manufacturer:	Flanders/CSC
2	Project No:	24590	Elevation	0'-0"		
3	Site:	DOE Hanford	Supporting Calculations	24590-HLW-MAC-PJV-00002	Manufacturer Part No:	*
4	Safety Class	SS				
5	Seismic Category	SC-III	Associated Drawings	24590-HLW-M6-PJV-00002	Quantity Required	1
6	System No.	PJV			Quality Level	Q
7	System Description	24590-HLW-3YD-PJV-00001		Remote Change Specification	24590-WTP-3PS-MKH0-T0003	
8	Description:	HLW Pulse Vent System - Primary "Active" Housing			Environmental Qualification: MILD See Appendix 1 EQ datasheet	

9 **Notes:**

10 1.) Vendor to fill in data in cells with (*) asterisk. NA means not applicable.

11 2.) **PJV airstream constituents:** Reference Calc. 24590-WTP-M3C-HOP-00001, Melter OffGas and Liquid Effluent Definition,

12 Run Results. See Table Streams No. HV250, page 21 of 24.

13 The following are the constituents of the offgas:

	Chemical:		Radiological:	
14				Temperature = 16°C (61°F)
15	By Volume%:	Units (mg/m³):	Units (Bq/m³):	Heat Capacity 1.00 kJ/kg-C
16	N_2 = 77.7%	NO_X = 6.37E-18	Alpha = 2.56E+01	Pressure = 991 mbar
17	O_2 = 20.8%	SO_X = 1.41E-19	Beta/Gamma(1) = 2.32E+04	Relative Humidity 30.0%
18	Ar = 0.9%	NH_3 = 3.16E-05	H-3 = 1.01E-02	Density = 1.192 kg/m³
19	CO_2 = 0.0%	Entrained Solids	C-14 = 2.25E-03	Avg. Molecular Wt = 28.9 g/mol
20	H_2O = 0.5%	= 1.77E-02	I-129 = 1.02E-04	Thermal Cond. = 25.13 mW/m-c
				Viscosity = 17.96 µPa-s

21 (1) Beta/Gamma dose excludes Tritium, Carbon-14, and Iodine.

22

23 3.) **Diff. pressure taps:** 1/2-in. socket weld, T-304L SS half coupling. Size of hole penetrating housing pressure boundary at 1/8-in. diam.

24 4.) **Operating Max/Normal Inlet Air Temperatures** from Table 7.3 in: 24590-HLW-M6C-PJV-00003.

25 5.) **The thickness for the nominal 20-in. diam. inlet/outlet connections** on the filter housing and the ductwork supplied between the primary

26 and secondary filter housings shall be **0.25 "** thick (pipe or rolled and welded plate per A240).

27 6) Radiation Dose Rates for HLW R5 room H-0104 (Filter Cave), See **CCN: 152094**, Ref. Calc. 24590-HLW-Z0C-30-00016, Table 7-10.

28 7.) **HEPA Housing** has been credited to perform following a seismic event. Therefore, the design is required to be Seismic Qualification Tested (i.e., shaker

29 table test) in accordance with 24590-WTP-3PS-MKH0-T0001. During shop test, contractor may use a temporary valve or blank -off plate.

30 **Min. Housing Filter System Efficiency:** >/ = 99.97% (inclusive margin) per ASME AG-1 TA-4634, prior to, during and following shake test.

31 Observe and note efficiency reading on photometer during test.

32 **HEPA Filter Seismic Qualification:** ASME AG-1 FK-4300; and Equipment Qualification Datasheet (Appendix 1 and Attachment A).

33 **Pressure Boundary and Filter Sealing Surface Allowable Leakage:** < 0.0005 scfm/cu. ft of test volume following seismic test.

34 8.) Aerosol test ports include injection and sampling at each stage. See vendor submittal 24590-QL-P0A-MKH0-00002-06-00006, -07-00087, 07-00088

35 & -07-00188 for C5V system filter housing configuration and dimensions (similar design to PJV, except for nozzle diameter and orientation).

36 9.) **Drain connections:** 1-1/2-in. NPT pipe nipple with cap, T-304L SS.

37 10.) **Sealing materials and mechanism** shall comply with ASME AG-1.

38 11.) Contents of this document are **"Dangerous Waste Permit Affecting"**.

39 12.) **Design pressure drop** is a "Target" value (2.2 in. WC for Housing and associated ducting plus 1.55 for HEPA Filter to a total of 3.75 in. WC);

40 actual value to be reported by F/CSC in prototype test report, subject to buyer approval.

41 **Remarks:** ALL DIMENSIONAL DATA SHOWN ON THIS DATA SHEET ARE MEANT TO CONVEY BUYER DESIGN PREFERENCES

42 AND MAY BE MODIFIED BY F/CSC. FOR AS-BUILT INFORMATION REFER TO VENDOR SUBMITTALS.

43 Blank data fields are not required to be completed.

44	SAFETY SCREENING/EVALUATION REQUIRED? IF YES PER 24590-WTP-GPP-			YES = X		NO =		
45	SREG-002, E&NS SIGNATURE REQUIRED BELOW							
46	8	4/27/10	Re-configured Appendix 2, per Plant Design nozzle location and orientation and revised minimum filter housing efficiency to 99.97%.	RKRamos	[illegible]	JATuck	[illegible]	Gerard Garcia
47	7	3/1/2010	Added to Note 7, Shaker table test notification. Updated attached EEQ (Attach. A) per latest templates and with revised ISRS data and curves from coupled analysis. HEPA Housing overall dimension per F/CSC. Rev. note 6. Added Appendix 2 for instrument taps nozzle location.	R.K.Ramos	C. Meng	J.Tuck	Pete Shea	W. Lawrence
48 49 50 51 52	6	9/24/2009	Rev. rad. dose level, Safety Class, Quality Level, inlet temp., leakage rate, leak test pressure, and pressure drop; rev. Note 2 service conditions (to replace Att. B); rev. Note 8; added Note 11 per DCN 24590-HLW-MAN-PJV-00001; added notes 3, 4, & 12; added Remarks and Safety Screening note; added EQ datasheet and seismic criteria (App. 1 & Att. 1).	J.Tuck	C. Meng	R.K.Ramos	L.H. Solis	Gerard Garcia
53	0	10/22/2002	Issued for Purchase	David Royer	_	A.C.Tan	_	J. Sanders
54	**Rev**	**Date**	**Description**	**Originator**	**E & NS**	**Checker**	**Reviewer**	**Approver**

APPENDIX 1 **REMOTE CHANGE HEPA FILTER HOUSING** **EQUIPMENT QUALIFICATION Data Sheet:** **24590-HLW-MAD-PJV-00004**	MR No. **24590-QL-MRA-MKH0-00002** Plant Item No. **24590-HLW-MK-PJV-HEPA-00004A**	Rev No. **8**

1	**EQUIPMENT IDENTIFICATION:**		
2	**Full Component Tag Number or BNI Stock Code Number**	**24590-HLW-MK-PJV-HEPA-00004A**	**Safety Classification**
3	**Equipment Datasheet Number**	**24590-HLW-MAD-PJV-00004**	☐ **SC** ☒ **SS**
4			☐ **APC-PAM**
5	**Description**	HLW PJV is a Primary and Secondary HEPA Filter Housing configuration with a remote operated Inlet & Outlet dampers (By Others). Remote change radial flow HEPA filters are used to treat gaseous emissions. The Safety Classification is Safety Significant (SS) to ensure filtration of the emission stream to acceptable level prior to release.	**Seismic Category**
6			☐ **SC-I** ☐ **SC-II**
7			☒ **SC-III** ☐ **SC-IV**
8			☐ **SC-III** Seismic Interaction only
9	**Location (Facility / Building and Room No.)**	HLW PJV Primary HEPA Filter Housing 24590-HLW-MK-PJV-HEPA-00004A is located inside Room **H-104, at EL. 0'-0".**	
10	**Safety Function(s)**	Provide confinement and protection against crush/impact events. Provide Safety Significant filtering of normal operations and as a significant contributor to defense in depth.	
11		Source: 24590-WTP-PSAR-ESH-01-002-04 Section: 4.4.18.	
12			
13	Equipment Safety Function Type	☒ Passive Mechanical ☐ Active Mechanical ☐ Electrical	
14	Seismic Safety Function	Seismic Operability Requirements	
15	☒ Yes ☐ No	☒ During Seismic Event ☒ After Seismic Event ☐ None	
16			
17	**EQUIPMENT ENVIRONMENTAL QUALIFICATION (EEQ)** **(Parameter values stated in this section do not include process conditions or operationally induced conditions)**		
18	Classification of Environment	☒ Mild ☐ Harsh	Qualified Life (years) ☒ 40 ☐ Other

	Parameters Type / Units	Parameter Value	Parameter Duration (number)	Duration Units	WTP Source Document Number
19					
20					
21	**Normal Ambients**				
22	High Temperature (°F)	113	Note 20	40 Years	24590-HLW-U0D-W16T-00001
23	Low Temperature (°F)	59	Note 21	N/A	24590-WTP-DB-ENG-01-001, Table 12-1 (Plant rooms)
24	High Relative Humidity (%RH)	100 Condensing	Note 22	N/A	24590-HLW-U0D-W16T-00001
25	Low Relative Humidity (%RH)	5	Note 22	N/A	24590-HLW-U0D-W16T-00001
26	High Pressure (in.-w.g.)	0	Note 23	N/A	24590-HLW-U0D-W16T-00001
27	Low Pressure (in.-w.g.)	(-)1.4	Note 23	N/A	24590-HLW-U0D-W16T-00001
28	Radiation Dose Rate (mRad/hr)	35,400	40	Years (Note 24- A)	24590-HLW-U0D-W16T-00001 (24590-HLW-Z0C-30-00016, See CCN 152094)
29	Plant / Process Induced Vibration	☐ Yes ☒ No			
30	Additional Normal Information:	None			
31					
32	**Abnormal Ambients**				
33	High Temperature (°F)	126	8	hours/yr	24590-HLW-U0N-W16T-00001 (For Duration See: 24590-HLW-U0D-W16T-00001, 1.4C)
34	Low Temperature (°F)	40	Note 21	N/A	24590-HLW-U0D-W16T-00001
35	High Relative Humidity (%RH)	100 Condensing	Note 22	N/A	24590-HLW-U0D-W16T-00001
36	Low Relative Humidity (%RH)	6	Note 22	N/A	24590-HLW-U0N-W16T-00001
37	High Pressure (in.-w.g.)	4	Note 23	N/A	24590-HLW-U0D-W16T-00001
38	Low Pressure (in.-w.g.)	(-)6.7	Note 23	N/A	24590-HLW-U0D-W16T-00001
39	Radiation Dose Rate (mRad/hr)	35,400	0	Years (Note 24-A)	24590-HLW-U0D-W16T-00001 (24590-HLW-Z0C-30-00016, See CCN 152094)
40	Exposure to Wet Sprinkler System	☐ Yes ☒ No		NA	
41	Additional Abnormal Information:	None			
42					

	APPENDIX 1 **REMOTE CHANGE HEPA FILTER HOUSING** **EQUIPMENT QUALIFICATION Data Sheet:** **24590-HLW-MAD-PJV-00004**				MR No. **24590-QL-MRA-MKH0-00002** Plant Item No. **24590-HLW-MK-PJV-HEPA-00004A** Rev No. **8**
1	**Parameters Type / Units**	**Parameter Value**	**Parameter Duration (number)**	**Duration Units**	**WTP Source Document Number**
2	**Design Basis Events (DBE) Ambients**				
3	High Temperature (°F)	135	1000	hours	24590-HLW-U0N-W16T-00001 (For Duration See: 24590-HLW-U0D-W16T-00001, 1.4D)
4	Low Temperature (°F)	40	Note 21	N/A	24590-HLW-U0D-W16T-00001
5	High Relative Humidity (%RH)	100 Condensing	482	hours	24590-HLW-U0D-W16T-00001
6	Low Relative Humidity (%RH)	6	1000	hours	24590-HLW-U0N-W16T-00001
7	High Pressure (in.-w.g.)	4	1000	hours	24590-HLW-U0D-W16T-00001
8	Low Pressure (in.-w.g.)	(-)6.7	1000	hours	24590-HLW-U0D-W16T-00001
9	Radiation Dose Rate (mRad/hr)	35,400	0	hours	24590-HLW-U0D-W16T-00001 (24590-HLW-Z0C-30-00016, See CCN 152094)
10	Submergence	☐ Yes ☒ No		hours	See Note 16
11	Chemical/Spray Exposure	☐ Yes ☒ No		hours	24590-HLW-U0D-W16T-00001
12	Additional DBE Information	Note 25			
13					
14					
15					
16					
17					
18	**DBE Chemical Exposure Details**				
19	DBE Chemical Types/Concentration		NONE		
20					
21					
22					
23	**Electrical Interfaces Supporting the Safety Function**				
24	Power Supply Voltage (VAC, VDC)		NA		
25	Power Supply Frequency (Hz)		NA		
26	Power Connection Method		NA		
27	I / O Signals to /from Equipment		NA		
28	I / O Connection Method		NA		
29					
30	**Mechanical Interfaces**				
31	Mounting Configuration (orientation)		* Note 13		
32	Mounting Method (bolts, welds, etc)		* Note 13		
33	Auxiliary Devices		* Note 13		
34					
35	**Equipment Seismic Qualification (ESQ)**				
36	**Parameters**	**Title**		**References/Documents Number**	**Version/ Revision**	**Remarks**
37	WTP Seismic Design	Structural Design Loads for Seismic		24590-WTP-3PS-FB01-T0001	4	N/A
38	Specification	Category III & IV Equipment and Tanks				
39	Specified Seismic Load	HLW Filter Cave Coupled Structural Analysis		24590-HLW-S0C-S15T-00108	0B	See Note 18 and
40	Parameters					Attachment A
41						
42						
43						
44						
45						
46						
47						
48						

Equipment Qualification Notes and Additional Information

Notes: Continuation from page 3, Data Sheet:

13. * Data to be provided by SELLER through the submittal process as required on the **G-321-E form.**
14. Note Deleted
15. Note Deleted See Note 24 A & B.
16. Equipment submergence shall reference to the room postulated water depths and the actual equipment elevation from the floor. Remote HEPA Filter Housing are supported by structural steel and elevated above the room flood heights of 1.58 ft.
17. Remote HEPA Filter Housing needs to be qualified for the external (Room H-0104 (R5/C5)) and internal (Off-gas constituents, See Note 2), significant environment differences such as in room temperatures, pressures and radiation dose level (Rad dose could be above 34,500 mRad/hr), that may affect the short term or long term ability of the equipment to perform its safety functions. The interrelationship between external/internal of the Remote HEPA Filter Housing environments has not been analyzed so the difference identified in the EQD represent potential for extreme.
18. Nozzle loads and in-structure response spectra (ISRS) are provided by CSA (see Att.A). ISRS are suitable for seismic qualification of the filter boxes by analysis. They are also provided for testing of the filters, but do not include a 1.4 factor for testing, or any other conservatism. The curves are provided for 4% and 5% damping. ISRS data points are at the bottom support points of the boxes. In the nozzle load data, live loads related to civil structural steel and are not directly involved with ducting or filter housing. The "thermal, normal" case is intended for combination with seismic (if required). The "thermal, off-normal" applies to post-DBE conditions. Nozzle ISRS data point locations are on the nozzle centerline at the filter housing box face. Nozzle loads in Att. A do not include factors for conservatism. Magnitudes are enveloping for all nozzles. Load components in Att. A are defined as follows:

P = Axial	T = Torsion
V2 = Shear along minor axis (vertical)	M2 = Moment about minor axis
V3 = Shear along major axis (horizontal)	M3 = Moment about major axis

19. **DOE Radioactive Materials Disclaimer:**
Please note that source, special nuclear and byproduct materials, as defined in the Atomic Energy Act of 1954 (AEA), are regulated at the US Department of Energy (DOE) facilities exclusively by DOE acting pursuant to its AEA authority. DOE asserts, that pursuant to AEA, it has sole and exclusive responsibility and authority to regulate source, special nuclear, and byproduct materials at DOE-owned nuclear facilities. Information contained herein on radionuclides is provided for process description purposes only.
20. For thermal aging, the high normal temperature shall be assumed to subsist for 40 years less the duration of the high abnormal temperature. For any lesser qualified life, the normal and abnormal condition durations shall be assigned proportionally. The abnormal temperature is stated to subsist for a certain number of hours per year. It shall be taken to subsist for this number of hours for each year of the qualified life.
21. The ability to provide the safety function at the low normal temperature, the low abnormal temperature or the low DBE temperature (whichever be the lowest) shall be established by test, analysis, or operating experience. The thermal aging at these respective low temperatures will be conservatively covered by the thermal aging per note 20 above. Therefore, no duration is assigned for the low temperatures.
22. The ability to provide the safety function at the extremes of the normal and abnormal humidity conditions, taking into consideration the high and low normal, and high and low abnormal, shall be established by test, analysis, or operating experience. No duration is assigned for the normal and abnormal humidity conditions.
23. If the performance of the safety function of the equipment is affected by ambient pressure, the ability to provide the safety function at the extremes of the normal and abnormal pressure conditions, taking into consideration the high and the low normal and the high and low abnormal pressures, shall be established by test, analysis, or operating experience. No duration is assigned to the normal and abnormal pressure conditions.
24
    A. If the abnormal radiation dose rate is the same as the normal radiation dose rate, the normal radiation dose rate shall be assumed to subsist for 40 years, or any lesser qualified life, and the duration of the abnormal radiation dose rate is "0."
    B. If the abnormal radiation dose rate is higher than the normal radiation dose rate, the abnormal radiation dose rate shall be assumed to subsist for 40 years, or any lesser qualified life, and the duration of the normal radiation dose rate is "0."
25. The DBE conditions shall be taken to subsist for the stated number of hours following the qualified life of the equipment.
26. The values stated in this EQD are the ambients and do not include the thermodynamic and radiation conditions imposed by the process fluids, self-heating, etc. The data pertaining to process fluid and service induced parameters are to be taken into account where significant, such as in thermal aging analyses. These data can be obtained from the equipment data sheets or the Equipment Specification.
27. Equipment that is to be installed in inaccessible locations must be qualified to a 40-year life without the need for maintenance or replacement.

ATTACHMENT A REMOTE CHANGE HEPA FILTER HOUSING EQUIPMENT QUALIFICATION Datasheet: 24590-HLW-MAD-PJV-00004	MR No. 24590-QL-MRA-MKH0-00002	
	Plant Item No. 24590-HLW-MK-PJV-HEPA-00004A	Rev No. 8

In-Structure Response Spectra (ISRS) and Nozzle Loads: Based on 24590-HLW-S0C-S15T-00108, Rev. 0B.

System	Load Case	P/kip	V2/kip	V3/kip	T/kip-in.	M2/kip-in.	M3/kip-in.
Nozzle Load for PJV HEPA Housing	DL (dead + live)	0.09	0.78	0.09	4.0	0.6	2.0
	To (thermal, normal)	5.59	3.05	1.12	52.5	2.6	20.9
	Ta (thermal, off-normal & post-DBE)	6.30	3.35	1.61	75.0	4.1	24.1
	E (seismic)	0.45	0.19	0.26	3.7	3.2	1.0

See Note 18 for definition of load components (P, V2, V3, T, M2, & M3), load cases, and conservatism factors.

Filter Box Support ISRS:

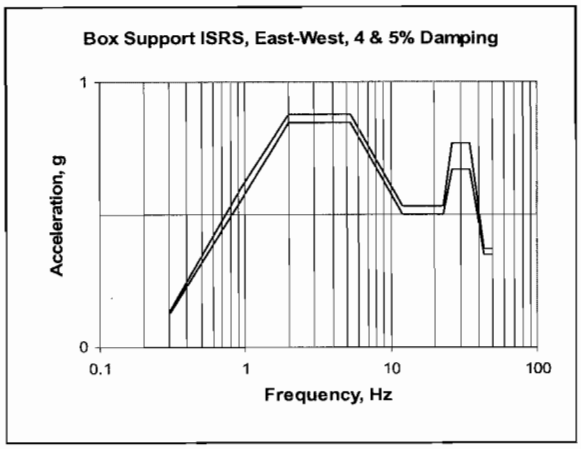

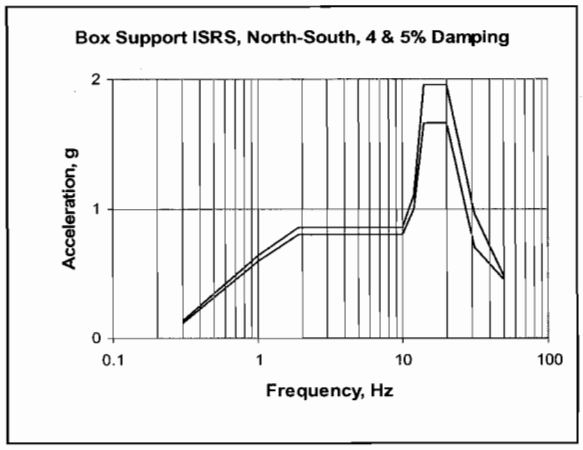

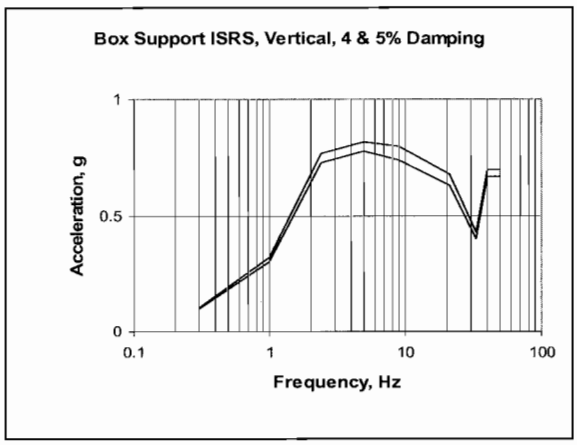

Filter Box Support ISRS Data:

Direction:	EW	EW		NS	NS		Vert	Vert
Damping:	4%	5%		4%	5%		4%	5%
Freq, Hz	Accel, g	Accel, g	Freq, Hz	Accel, g	Accel, g	Freq, Hz	Accel, g	Accel, g
0.30	0.13	0.12	0.30	0.13	0.12	0.30	0.105	0.10
0.94	0.60	0.55	1.00	0.64	0.60	1.00	0.32	0.30
2.00	0.88	0.85	1.90	0.85	0.80	2.40	0.77	0.73
5.30	0.88	0.85	6	0.85	0.80	5	0.82	0.78
12	0.53	0.50	10	0.85	0.80	9	0.80	0.74
23	0.53	0.50	12	1.10	1.00	21	0.68	0.63
26	0.77	0.67	14	1.96	1.66	33	0.43	0.40
35	0.77	0.67	20	1.96	1.66	40	0.70	0.67
43	0.37	0.35	31	0.96	0.70	50	0.70	0.67
50	0.37	0.35	50	0.48	0.45			

APPENDIX 2 REMOTE CHANGE HEPA FILTER HOUSING Nozzle Location Sketch for Datasheet: 24590-HLW-MAD-PJV-00004	MR No. 24590-QL-MRA-MKH0-00002	
	Plant Item No. 24590-HLW-MK-PJV-HEPA-00004A	Rev No. 8

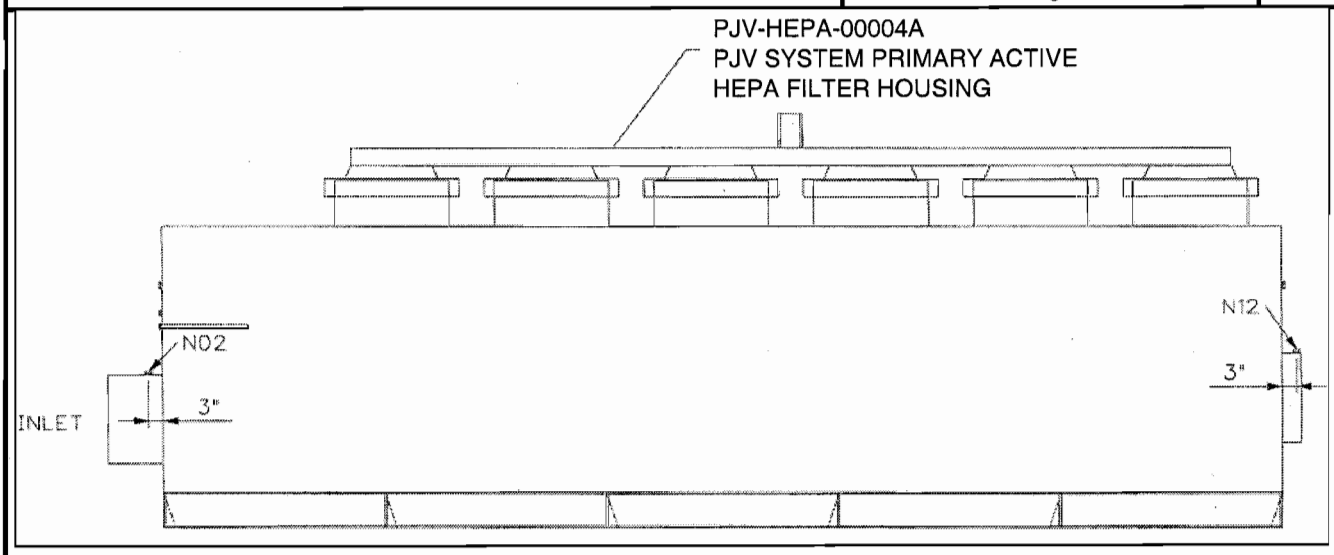

ELEVATION VIEW OF PJV-HEPA-00004A

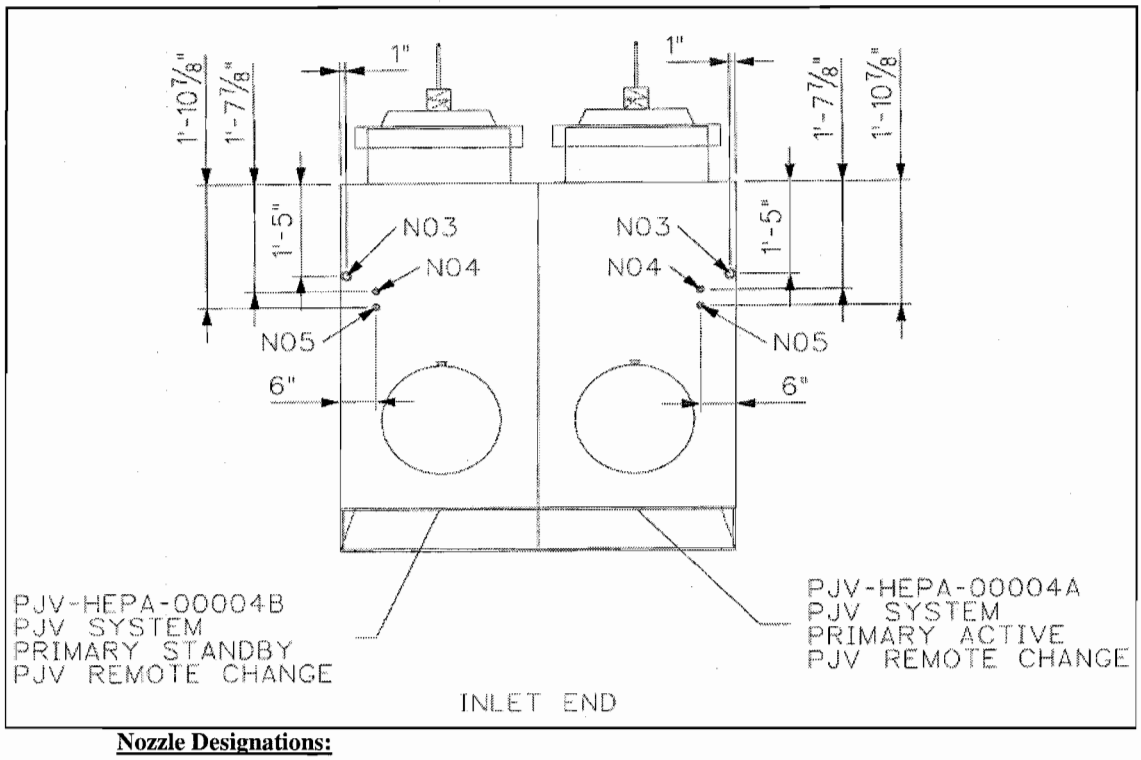

Nozzle Designations:

N01: Housing inlet
N02: Injection port
N03: Upstream sample.
N04: Upstream static pressure
N05: Downstream static press.
N12: Downstream sample