BECHTEL

...ED BY
...TP PDC
12/3/02
DATE

# RIVER PROTECTION PROJECT – WASTE TREATMENT PLANT

## ENGINEERING SPECIFICATION

FOR

## FIELD-ERECTED TANKS DESIGN and FABRICATION

**Content applicable to ALARA?** ☐ **Yes** ☒ **No**

**ADR No.** **Rev**

**DIM No.** 00001 **Rev 0**

24590-WTP-3PI-MTF5-~~T0001~~ 12-3-02

DOE Contract No.
DE-AC27-01RV14136

| | | | | | | |
|---|---|---|---|---|---|---|
| | | | | | | |
| | | | | | | |
| | | | | | | |
| | | | | | | |
| | | | | | | |
| | | | P.Prakash | C.Slater | G.Warner | M.Hoffman |
| 0 | 03DEC2002 | Issued for Purchase | P.Prakash | C.Slater | G.Warner | M.Hoffman |
| **REV** | **DATE** | **REASON FOR REVISION** | **BY** | **CHECK** | **QA** | **APEM/DCE** |

| **SPECIFICATION No.** | **Rev** |
|---|---|
| 24590-WTP-3PS-MTF5-T0001 | 0 |



Processed/Data Entry ☐ Copied/QA ☐ Scanned ☐ Filed
12/3/02 MZ

# Contents

1 Scope ..... 1
1.1 Description and Location ..... 1
1.2 Definitions ..... 1
1.3 Conflicts ..... 1
1.4 Buyer's Responsibilities ..... 1
1.5 Seller's Responsibilities ..... 1
2 Applicable Documents ..... 2
2.1 Codes and Industry Standards ..... 2
2.2 Related Documents ..... 3
2.3 Project Documents ..... 3
3 Quality Assurance ..... 3
4 Design Requirements ..... 3
4.1 Basic Requirements ..... 3
4.2 Loading ..... 3
4.3 Corrosion Allowance ..... 4
4.4 Corrosion Control ..... 4
4.5 Nozzles and Manways ..... 4
4.6 Nozzle Loading ..... 5
4.7 Nozzle Reinforcement ..... 5
4.8 Internal Components ..... 6
4.9 External Components ..... 6
5 Materials ..... 6
5.1 General ..... 6
5.2 Pipe Fittings ..... 6
6 Fabrication ..... 6
6.1 General ..... 6
6.2 Layout ..... 7
6.3 Welding Requirements ..... 7
7 Tests and Inspections ..... 7
7.1 Non-Destructive Examinations ..... 7
7.2 Hydrotest and Settling Measurement ..... 7
7.3 Cathodic Protection ..... 8
7.4 Final Inspection of Completed Tank ..... 8

8 Preparation for Completion ..... 8
8.1 General ..... 8
9 Documentation and Submittals ..... 8
9.1 General ..... 8

Please note that source, special nuclear, and byproduct materials, as defined in the Atomic Energy Act of 1954 (AEA) are regulated at the U. S. Department of Energy (DOE) facilities exclusively by DOE acting pursuant to its AEA authority. DOE asserts that pursuant to AEA, it has sole and exclusive responsibility and authority to regulate source, special nuclear, and byproduct materials at DOE-owned nuclear facilities. Information contained herein on radionuclides is provided for process description purposes only.

# 1 Scope

## 1.1 Description and Location

1.1.1 This specification together with the subcontract and Drawings covers the requirements for the design, fabrication, and testing of steel tanks for the U.S. Department of Energy, Office of River Protection, River Protection Project – Waste Treatment Plant (RPP-WTP) located at Hanford Site in the southeastern part of Washington State.

1.1.2 This specification covers tanks designed to API Standard 650, AWWA D100, and NFPA 22 standards only.

## 1.2 Definitions

1.2.1 **MDS**: The Buyer's mechanical data sheet.

1.2.2 **Drawings**: The Buyer's Drawings include the tank equipment assembly drawing and any associated standard drawings.

1.2.3 **Quality Level:** Establishes the quality assurance program requirements. For the purposes of this specification, Quality Level also determines radiographic and ultrasonic testing requirements. Buyer assigns Quality Levels on the MDS.

1.2.4 **Seismic Category:** Classification of tanks defining the required condition, status, and operating function during and after a seismic event. The Seismic Category determines the analysis method and acceptance criteria appropriate for the intended service and safety function of the tank. Buyer assigns Seismic Category on the MDS.

1.2.5 **Buyer:**/ Contractor

1.2.6 **Seller:**/ Subcontractor

## 1.3 Conflicts

1.3.1 In cases of conflicts between this specification and other drawings or specifications, the Seller shall call attention to the conflict and request an interpretation by the Buyer.

1.3.2 All deviations from this specification, the subcontract, or the Drawings shall have the written approval of the Buyer.

## 1.4 Buyer's Responsibilities

1.4.1 Process design of the tank for performance, capacity, or configuration is the Buyer's responsibility, and is not part of this specification.

## 1.5 Seller's Responsibilities

1.5.1 Seller shall assume complete responsibility for the design, fabrication, testing, inspection, and documentation as required by the Buyer and detailed in the subcontract.

1.5.2 Buyer's review of the Seller's drawings, or release of the tank by the Buyer's representative, shall in no way relieve the Seller of the responsibility for complying with all the requirements of this specification and the subcontract.

1.5.3 The Seller shall substantiate any necessary changes to the MDS and Drawings and obtain approval from the Buyer.

# 2 Applicable Documents

## 2.1 Codes and Industry Standards

2.1.1 Unless otherwise noted, all codes and standards referenced herein shall be to the latest editions, addenda, and supplements at the time of the issue of the subcontract.

2.1.2 American Petroleum Institute, API Standard 650, "Welded Steel Tanks for Oil Storage."

2.1.3 American Petroleum Institute, API Standard 653, "Tank Inspection, Repair, Alteration, and Reconstruction."

2.1.4 American Water Works Association, AWWA D100, "Welded Steel Tanks for Water Storage."

2.1.5 National Fire Protection Association, NFPA 22, "Standard for Water Tanks for Private Fire Protection."

2.1.6 American Society of Civil Engineers, ASCE 7-98, "Minimum Design Loads for Buildings and Other Structures."

2.1.7 American Society for Nondestructive Testing, Inc., Recommended Practice No. SNT-TC-1A, 1980 Edition.

2.1.8 Occupational Safety and Health Administration Regulations, OSHA 29 CFR Part 1910, "Walking-Working Surfaces."

2.1.9 American Society of Mechanical Engineers, ASME B16.5, "Pipe Flanges and Flange Fittings NPS 1/2 through NPS 24."

2.1.10 National Fire Protection Association, NFPA 70, "National Electrical Code"

2.1.11 National Fire Protection Association, NFPA 780, "Standard for Installation of Lightning Protection Systems"

2.1.12 Underwriters Laboratories Inc., UL 96, "Lightning Protection Components"

2.1.13 NACE International Recommended Practices, RP0196, "Galvanic Anode Cathodic Protection of Internal Submerged Surfaces of Steel Water Storage Tanks"

2.1.14 NACE International Recommended Practices, RP0193, "External Cathodic Protection of On-Grade Carbon Steel Storage Tank Bottom

### 2.2 Related Documents

2.2.1 Other project specifications, standards, and standard details as listed or referenced in Exhibits E and F of the subcontract shall be used as applicable for the design and fabrication of the tanks.

### 2.3 Project Documents

2.3.1 RPP-WTP Specification for Tank Welding, 24590-WTP-3PS-MTSS-T0001.

2.3.2 RPP-WTP Engineering Specification for Coating and Lining of Field Erected Tanks, 24590-WTP-3PS-AFPS-T0005.

2.3.3 RPP-WTP Specification for Instrumentation for Packaged Systems, 24590-WTP-3PS-JQ07-T0001.

2.3.4 RPP-WTP Engineering Specification for Hot and Anti-Sweat Thermal Insulation, 24590-WTP-3PS-NN00-T0001.

2.3.5 RPP-WTP General Specification for Supplier Quality Assurance Program Requirements, 24590-WTP-3PS-G000-T0001.

# 3 Quality Assurance

3.1 Section 9 of the material requisition or Exhibit J of the subcontract and the *RPP-WTP General Specification for Supplier Quality Assurance Program Requirements* covers quality assurance requirements. Refer to the MDS for the quality level specified for the tank.

# 4 Design Requirements

### 4.1 Basic Requirements

4.1.1 Unless otherwise specified, all tanks shall be designed and fabricated in accordance with the Drawings, design standard identified on the MDS, and any additional requirements of this specification, MDS, and the referenced Drawings.

4.1.2 Seller shall consider design details and material thickness shown on Drawings and MDS as the minimum requirements.

4.1.3 Seller shall not scale Drawings.

### 4.2 Loading

4.2.1 Seismic analysis shall be performed per the requirements of the seismic design standard identified on the MDS.

4.2.2 If wind, snow, or other loadings are specified on the MDS, the design for such loadings shall be based on the requirements of the *ASCE 7-98*, using the loading parameters identified on the MDS.

## 4.3 Corrosion Allowance

4.3.1 Corrosion allowance is specified on the MDS and shall be applied to each surface exposed to process vapor or liquid. Internal piping shall have the specified corrosion allowance applied to both internal and external surfaces.

4.3.2 Unless otherwise specified, corrosion allowance shall not be applied to external tank surfaces.

## 4.4 Corrosion Control

4.4.1 If specified on the MDS, the cathodic protection system shall be designed according to NACE RP0196, RP0193.. The system, along with protective coating, shall protect the interior of the tank along with the bottom in contact with the earth.

## 4.5 Nozzles and Manways

4.5.1 All nozzles shall be set-in type or through type with full penetration welds. All inside nozzle neck edges shall be rounded to 1/8-inch minimum radius. Set-in type nozzles shall be flush with the inside wall of the shell or roof.

4.5.2 Flanges shall be weld neck or slip-on per *ASME B16.5*.

4.5.3 Flange bolt holes shall straddle plant north-south orientations.

4.5.4 The following illustrate acceptable and unacceptable nozzle configurations and welding:

**Acceptable Nozzle Connections**

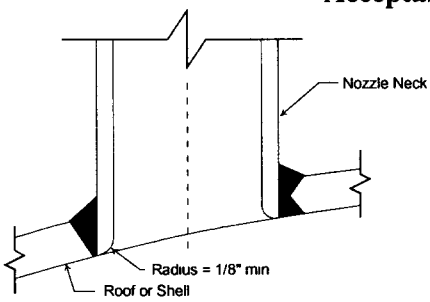


**Set-in Nozzle with Full Penetration Weld**

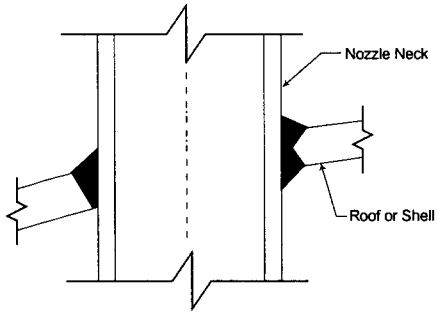


**Through Nozzle with Full Penetration Weld**

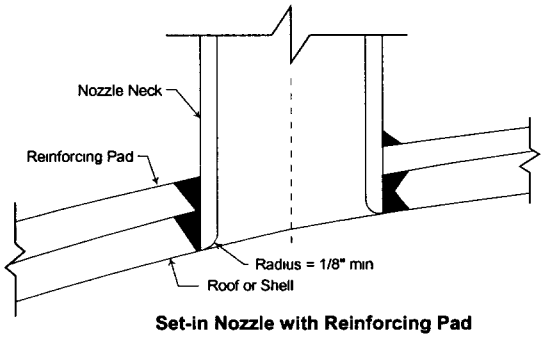


**Set-in Nozzle with Reinforcing Pad**

**Unacceptable Nozzle Connections**

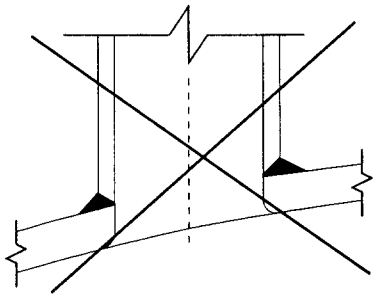

**Set-on Nozzle with Full Penetration Weld**

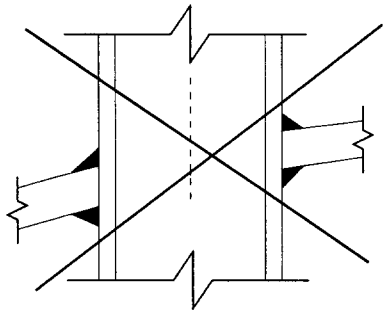

**Through Nozzle with Double Fillet Weld**

## 4.6 Nozzle Loading

4.6.1 Seller shall reinforce nozzles as required to limit deflections given the piping loads and deflection limits determined by the Buyer.

## 4.7 Nozzle Reinforcement

4.7.1 Nozzle reinforcing pads shall have one-piece construction. Pad thickness shall be the same as the penetrated shell and have one 1/8 inch NPT telltale hole for testing purposes. On completion of all fabrication activities, the hole shall be fitted with a screwed plug of the same material as the reinforcement plate.

### 4.8 Internal Components

4.8.1 Design and layout of support members for tank internals shall be the responsibility of the Seller.

### 4.9 External Components

4.9.1 If the MDS specifies insulation, the Seller shall design the insulation systems and supports for the insulation function designated on the MDS and according to the requirements of *RPP-WTP Engineering Specification for Hot and Anti-Sweat Thermal Insulation.*

4.9.2 If specified on the Drawings, Seller shall provide and install pipe support clips. The material of the clip or reinforcing pad shall match the material of the shell.

4.9.3 Stainless steel grounding lugs shall be installed on all tanks as indicated on the Drawings.

4.9.4 All tanks shall have a nameplate of Type 300 stainless steel attached securely on a bracket welded to the tank at the location indicated on the Drawings. Bracket shall be the same material type as the adjoining tank shell. The nameplate shall include the Equipment Number in addition to all markings mandated by the tank design standard.

4.9.5 All ladders, platforms, landings and cages shall be designed and fabricated per *OSHA 29 CFR Part 1910.*

4.9.6 Heaters, grounding lugs, and instrumentation shall conform to NFPA 70, NFPA 780, and UL 96.

# 5 Materials

### 5.1 General

5.1.1 Materials shall be new, and free from defects. Material shall be furnished to the specification and grade shown on the MDS. The Seller shall not substitute materials without written approval from the Buyer. The Seller shall furnish certificates of compliance that the material meets the required specification.

### 5.2 Pipe Fittings

5.2.1 Pipe fittings shall conform to the appropriate ASME and ANSI standards for materials and dimensions unless otherwise stated in the subcontract.

# 6 Fabrication

### 6.1 General

6.1.1 Fabrication tolerances shall be in accordance with the tank design standard indicated on the MDS.

6.1.2 All stamps used for identification reference markings shall be of the low stress type. Stampings shall not be located near discontinuities.

6.1.3 When rolling any austenitic stainless plate, care shall be taken to prevent carbon pickup or contamination of rolled material. The work area shall be free of carbon steel grindings and general cleanliness shall be maintained to preclude carbon contamination.

6.1.4 Only stainless steel brushes, clean iron-free sand, ceramic or stainless steel grit shall be used for cleaning stainless steel or non-ferrous alloy surfaces. Cleaning tools or materials shall not have been previously used on carbon steel.

### 6.2 Layout

6.2.1 The longitudinal seams of adjacent shell courses shall be staggered by a minimum length (measured from the toe of the welds) of 5 times the plate thickness, or 4 inches whichever is greater.

6.2.2 Plate layouts shall be arranged so that longitudinal and circumferential weld seams clear all nozzles, manways, and their reinforcing pads to the maximum extent possible. A minimum clearance of eight times the plate thickness from the toes of the welds is required.

### 6.3 Welding Requirements

6.3.1 Seller shall comply with the *RPP-WTP Specification for Tank Welding.*

6.3.2 All welding shall be continuous. Stitch welding is prohibited.

## 7 Tests and Inspections

### 7.1 Non-Destructive Examinations

7.1.1 The NDE work must be performed by an inspector certified to the requirements of *SNT-TC-1A*. Either Level II or Level III inspectors certified to SNT-TC-1A shall interpret the results.

### 7.2 Hydrotest and Settling Measurement

7.2.1 All tanks shall be hydro-tested and measured for settlement according to the requirements of *API Standard 653*. In addition, the following sequence for hydro-testing shall be followed: The tanks shall be filled with water at a constant rate. The water shall be held for 24 hours during which the settlement of foundation shall be measured. If settlement is observed, measurements shall be taken every 24 hours until settlement stops. All settlement measurements shall be recorded. After settlement stops, the water shall be held for 7 days. After obtaining clearance from Buyer, the tanks shall be drained and dried thoroughly.

7.2.2 Tanks made of austenitic stainless steel materials shall be hydro-tested with potable water containing no more than 50 PPM chloride.

### 7.3 Cathodic Protection

7.3.1 Cathodic protection systems shall be tested to show compliance with NACE RP-0196-1996, RP0193-2001..

### 7.4 Final Inspection of Completed Tank

7.4.1 All external and internal examinations will be carried out by the Buyer's representative, unless otherwise agreed to in the approved quality assurance program. The finished dimensions and cleanliness of the tank shall comply with the relevant drawings and specifications after completion of all tests.

# 8 Preparation for Completion

### 8.1 General

8.1.1 Machined carbon steel surfaces, which are not protected by blind flanges, shall be coated with rust preventative.

8.1.2 All flanged openings, which are not provided with a cover, shall be protected by an *ASME B16.5* carbon steel blind flange of the same rating as the flange, a full-faced rubber gasket with a minimum thickness of 1/8 inch and carbon steel bolts with stainless steel washers.

# 9 Documentation and Submittals

### 9.1 General

9.1.1 Seller shall comply with the requirements of Exhibit I, Attachments A and B of the subcontract, as applicable. Furnish all applicable drawings, design calculations, reports of special analyses, welding procedures with procedure qualification records, test procedures, test reports, certificates of compliance, operating manuals, installation manuals, maintenance manuals and all other required documents.

9.1.2 Design calculations shall include relevant design standard formulas and source paragraph references, values used in the formulas, and calculated results with comparison to acceptable values. Where calculations are based on other than the specified design standard formulas, the source of the formulas shall be referenced. Where a computer program is used for calculations, a brief program description shall be given, including name and version of the program. If the program is not commercially available to industry, Seller shall maintain and provide, upon request, program documentation. Calculations shall include, but not be limited to:

- Design standard calculations
- Seismic calculations
- Support calculations
- Nozzle load analysis for local and gross effect, when required
- Design of attachments, both internal and external

- Cathodic protection design calculations.

9.1.3 Seller shall make a complete set of Buyer approved drawings and other documents available to the Buyer's representative at the time the quality surveillance activities are being conducted.

9.1.4 All records pertaining to the non-destructive examinations, base materials, filler materials, fabrication, and inspection shall be traceable to the area and part inspected and be accessible for Buyer's examination.

9.1.5 Seller shall provide certified copies of the test reports as required by Exhibit I of the subcontract.