R10757015

ISSUED BY
RPP-WTP PDC

RIVER PROTECTION PROJECT – WASTE TREATMENT PLANT

ENGINEERING SPECIFICATION

FOR

Forced Circulation Vacuum Evaporator System

Content applicable to ALARA? ☒ **Yes** ☐ **No**

ADR No.
24590-PTF-ADR-M-03-003

Rev
0

Quality Level
Q
DOE Contract No. DE-AC27-01RV14136

NOTE: Contents of this document are Dangerous Waste Permit affecting.

2	2/21/07	E. Le	L. Donovan	B. Makadia/ J. Julyk	M.O. Gibson	M. Ehlinger	R. Voke
1	03/24/05	E. Le	S. Crow	J. Julyk	N/A	G. Warner	R. Smith
0	04/24/03	E. Le	G. Butt	J. Julyk	N/A	G. Warner	S. Grabowski
REV	**DATE**	**BY**	**CHECK**	**REVIEW**	**E&NS**	**QA**	**DPEM**

SPECIFICATION No.
24590-PTF-3PS-MEVV-T0001

Rev
2

Best Available Copy

Revision History

Revision	Reason for Revision
0	Issued for Procurement
1	Incorporated Design Changes: 24590-PTF-3PN-MEVV-00001 24590-PTF-3PN-MEVV-00004 (which incorporated 24590-WTP-SDDR-PROC-04-00104) 24590-PTF-3PN-MEVV-00005 24590-PTF-3PN-MEVV-00006 with the following revisions: 1. Revised section 1.2.1 to delete duplicate information regarding internal deentrainment separation system for FEP & TLP separator vessels. 2. Revised section 1.2.1 to group support structure with their associated separator vessels. 3. Revised section 1.2.1 to provide more descriptive steam conditioning assembly of FEP & TLP evaporators for clarification. 4. Revised section 1.2.1 to add reboiler steam condensate transfer stations for FEP & TLP evaporators for Seller's additional scope of supply. 5. Revised section 1.2.1 to change "mechanical seal" to "pump seal" 6. Revised section 3.19.5 to delete "following by vertical up-ending" at the end of the 1st sentence 7. Revised section 3.20.3.5 to delete "assemblies" in the 1st sentence 24590-PTF-3PN-MEVV-00007 24590-PTF-3PN-MEVV-00009 1. Incorporated 24590-WTP-SDDR-PROC-04-00994, 24590-WTP-SDDR-PROC-04-00995, 24590-WTP-SDDR-PROC-04-01193, 24590-WTP-SDDR-PROC-04-01194, 24590-WTP-SDDR-PROC-04-01270, 24590-WTP-SDDR-PROC-04-01271, 24590-WTP-SDDR-PROC-04-01272, 24590-WTP-SDDR-PROC-04-01278 and 24590-WTP-SDDR-PROC-05-00181 2. Revised section 2.1.2 for clarifications 3. Revised wording in section 4.2.12 for clarification 4. Revised section 8.18 to delete "for off-gas piping pieces" from the 1st sentence 24590-WTP-SDDR-PROC-05-00208. Revised Appendix E to include reboiler steam condensate transfer stations. Revised Appendix P to add drawings for reboiler nozzle locations. Added Appendix T to provide design evaluation inputs
2	Incorporated Design Changes: 24590-PTF-3PN-MEVV-00012 with revision of section 3.4.3.3 for clarification 24590-PTF-3PN-MEVV-00014 with the following revisions 1. Revised section V8b of appendix V to remove digitized data verification requirement that is no longer applicable 2. Revised section V5.2 of appendix V to add "or greater" at the end of the sentence for clarification. 24590-PTF-3PN-MEVV-00019

Revision	Reason for Revision
	24590-WTP-SDDR-M-05-00438
	24590-WTP-SDDR-MS-07-00029
	Deleted Appendix R – outdated In-Structure Response Spectra (ISRS) curves
	Revised section 3.19.15 to add "following by vertical up-ending" from 24590-PTF-3PN-MEVV-00006 which was erroneously deleted in revision 1 of this specification
	Revised section 3.20.3.5 to add "assemblies" to the 1st sentence from 24590-PTF-3PN-MEVV-00006 which was erroneously deleted in revision 1 of this specification
	Revised section 4.2.12 to correct typos
	Revised section 8.1.8 to add "off-gas piping pieces" from 4590-PTF-3PN-MEVV-00009 which was erroneously deleted in revision 1 of this specification
	Revised sections 1.2.6, 3.4.3.2, and 3.9.13 to remove low-pressure steam information which is no longer applicable
	Revised section 1.2.12 to indicate that seismic information is provided in Appendix V.
	Revised section 1.2.14 to correct steam supply information
	Deleted section 1.3.29 to correct Buyer's scope of work
	Revised section 1.4.9 to delete outdated acceleration values
	Revised sections 1.4.11, 1.4.13, 1.4.15, 1.4.16, 1.4.18, 1.4.25, 1.4.26, 1.4.29, 1.4.30, and 1.4.32 to correct definitions
	Revised sections 2.2.6, 2.2.15, and 2.2.16 to be consistent with SRD
	Add sections 2.2.34, 2.2.35, and 2.2.36 for references.
	Revised section 3.1.17 to add "gpm" at the end of 2nd bullet.
	Added section 3.14.20 to incorporate 2" drain nozzle inlet to reboiler steam condensate vessel from desuperheater.
	Revised Appendix L to provide the location of 2" inlet drain nozzle.
	Revised section 3.16.3 to provide seismic analysis requirements in the Appendix V.
	Revised section 4.2.8 to clarify that threaded flanges and fittings are not allowed only in the balck cells.
	Revised section 6.6.3 to clarify the weld acceptance criteria
	Revised section 7.2 to clarify the stimulant test using non-radioactive cesium is not required.
	Revised section 11.2 to clarify design stress/seismic report submittal requirements.
	Revised sections 3.1.9, 3.9.2, 3.10.2, 3.11.4, 3.12.3 to clarify nozzle loading requirements
	Revised sections 2.4.60 and 2.4.61 to correct typos
	Revised Appendices A, B, and C to remove outdated references.
	Revised Appendix D to correct steam supply conditions.
	Revised Appendix E to add a note for clarification regarding QL-1 and QL-2 used by Seller.

Contents

1 Scope 5
1.1 Project Description and Location 5
1.2 Equipment, Material, and Services Required 5
1.3 Work by Others 12
1.4 Definitions 14
1.5 Mechanical Data Sheets 18
1.6 Safety/Quality/Seismic Classifications 18
2 Applicable Documents 18
2.1 General 18
2.2 Codes and Industry Standards 19
2.3 Reference Documents 21
2.4 Reference Drawings / Data Sheets 22
3 Design Requirements 27
3.1 General 27
3.2 Basic Function 30
3.3 Performance 31
3.4 Design Conditions 32
3.5 Environmental Conditions 33
3.6 Feed Pumps 34
3.7 Recirculation Pumps 36
3.8 Concentrate Pumps 37
3.9 Reboilers 38
3.10 Evaporator Separator Vessels 39
3.11 Primary Condensers 40
3.12 Secondary Condenser System 41
3.13 Evaporator Process Condensate Vessels & Pumps 42
3.14 Antifoam Skid and FEP/TLP Reboiler Condensate Transfer Stations 44
3.15 Mechanical Handling Requirements 45
3.16 Loadings 46
3.17 Electrical Requirements 47
3.18 Instrumentation and Control Requirements 47
3.19 Lifting Requirements 48
3.20 Accessibility and Maintenance 49

Contents

4 Materials 51
4.1 Positive Material Identification 51
4.2 Construction 51
4.3 Vessels 52
4.4 Pipework 53
4.5 Prohibited Materials 53
4.6 Storage of Special Materials (e.g., stainless steel) prior to work 53
5 Fabrication 53
5.1 General 53
5.2 Welding 54
6 Inspections and Examinations 54
6.1 Nondestructive Examinations 54
6.2 Dimensional Inspections 55
6.3 Visual Weld Inspections 55
6.4 Liquid Penetrant Test 56
6.5 Radiography 56
6.6 Magnetic Particle Examination 57
6.7 Final Inspection 57
6.8 Inspection and Test Status 57
6.9 Control of Nonconforming Items 57
7 Testing 57
7.1 Shop Tests 57
7.2 Integrated Acceptance Tests 58
8 Preparation for Shipment 59
8.1 General Requirements 59
8.2 Painting 60
8.3 Tagging 62
9 Quality Assurance 63
9.1 General Commercial Designation (CM) Requirements 63
9.2 Quality Level (QL) Requirements 63
10 Configuration Management 64
11 Documentation and Submittals 64
11.1 General 64

Contents

11.2 Calculations **65**
11.2.1 ANSI/AISC N690 Steel Frame / Support Designs 65
11.2.2 ASME VIII, Div 2, Appendix 4, Vessel including internal supports/components 65
11.2.3 ASME B31.3 Piping Design 65

11.3 As-Built Drawings **66**

11.4 Dimensional Record Drawings **66**

11.5 Project Start **66**

11.6 30 % Design Review **66**

11.7 60 % Design Review **67**

11.8 90 % Design Review **68**

11.9 Final Design Review **73**

Appendices

A Waste Feed Evaporator Stream Data A-1

B Treated LAW Evaporator Stream Data B-1

C Predicted Maximum Radionuclide C-1

D Evaporator Process Data D-1

E Quality Level and Seismic Category for Evaporator Equipment E-1

F Separator Vessel Skid Support Layout F-1

G Hot Cell Remote Impact Wrench G-1

H Deleted H-1

I FEP Evaporator Equipment Skids Location and Layout Sketches I-1

J TLP Evaporator Equipment Skids Location and Layout Sketches J-1

K Antifoam Equipment Skid Location and Layout Sketches K-1

L Reboiler Steam Condensate Transfer Station Location and Layout Sketches L-1

M Deleted M-1

N Deleted N-1

O Nondestructive Examination (NDE) of Fabricated Pipe Welds O-1

P Reboiler Skids and Preliminary Nozzle Loads at Grayloc Connections P-1

Q Reboilers and Recirculation Pumps Layout Q-1

R Deleted R-1

S Manufacturers Standard Coating Data Sheet S-1

T Design Evolution Inputs T-1

U Deleted U-1

V FEP/TLP Evaporator Systems Composite Analyses V-1

1 Scope

1.1 Project Description and Location

The Hanford Tank Waste Treatment and Immobilization Plant (WTP) is a complex of waste treatment facilities where the US Department of Energy (DOE) Hanford Site tank waste will be pretreated and immobilized into stable glass form via vitrification. The WTP Contractor will design, build, and startup the WTP pretreatment and vitrification facilities for the DOE Office of River Protection (ORP). The waste treatment facilities will pretreat and immobilize the low-activity waste (LAW) and high-level waste (HLW) currently stored in underground storage tanks at the Hanford Site.

The Hanford Site occupies an area of about 560 square miles and is located along the Columbia River, north of Richland, WA in the U.S.A. The WTP Facility will be constructed at the east end of the 200 East Area of the Hanford Site. The counties of Benton, Franklin, and Grant surround the Hanford Site.

1.2 Equipment, Material, and Services Required

This specification provides the requirements for the design, analysis, fabrication, quality assurance, inspection, testing, qualification, and labeling of three (3) forced circulation vacuum evaporator systems for use in the WTP Pretreatment Facility. This specification also provides the requirements for the supply of services, manuals, instructions, procedures, and other associated documentation.

The scope of work for the Seller includes all work defined in this specification and its addenda and attachments. Work shall include, but is not limited to, the following:

1.2.1 Provide fully detailed designs, drawings, diagrams, supporting calculations, supporting analyses, procedures, installation instructions, and all labor, materials, equipment, and services necessary to manufacture, test, inspect, label and package for shipment three (3) sets of the forced circulation vacuum evaporator system hardware, including handling and servicing equipment, all fabricated to appropriate NQA-1 requirements in accordance with all specification requirements, with the deliverables being reports, calculations, procedures, data sheets, drawings and diagrams as outlined in this specification and the Material Requisition (MR). Refer to tables below for what shall be included as part of evaporator systems to be provided.

Waste Feed Evaporator (FEP) Systems

Equipment	Tag
Two (2) FEP Separator Vessels. Each vessel with support structure, three layers of de-entrainment trays, two layers of mesh pads and sprays.	FEP-SEP-00001A FEP-SEP-00001B
Two (2) FEP Reboilers with Graylocs and PUREX nozzles installed in accordance with this specification and stainless steel structural support frames.	FEP-RBLR-00001A FEP-RBLR-00001B
Two (2) FEP Recirculation Pumps. Each pump includes motor, pump seals, and adjustable speed drive. The pump inlet and outlet pipe ends prepared for butt welding.	FEP-PMP-00009A FEP-PMP-00009B
Two (2) FEP Condenser skid. Each skid consisting of Primary Condenser, 1st stage steam ejector, Intercondenser, 2nd stage steam ejector, Aftercondenser and interconnecting piping.	FEP-COND-00001A FEP-COND-00002A FEP-COND-00003A FEP-EJCTR-00040 FEP-EJCTR-00041 FEP-COND-00001B FEP-COND-00002B FEP-COND-00003B FEP-EJCTR-00042 FEP-EJCTR-00043
One (1) FEP Condensate Vessel for both FEP systems. Vessel includes skirt and support ring.	FEP-VSL-00005
Two (2) FEP Condensate Pumps include base plate, motor, variable speed drive, and mechanical seal mounted on common skid.	FEP-PMP-00006A FEP-PMP-00006B
One (1) Antifoam Vessel serves the FEP and TLP separators. Vessel includes skirt.	AFR-TK-00001
Three (3) Antifoam Pumps (common for FEP and TLP systems) with base plate and motor mounted on common skid.	AFR-PMP-00006 AFR-PMP-00007 AFR-PMP-00008
Two (2) sets of FEP offgas piping 30" diameter from separator to Primary condenser. Piping includes pipe hangers.	"Note 1"
Two (2) FEP Steam Conditioning Assembly consisting of a steam supply flow control valve, desuperheater and flow element.	FEP-SKID-00006A FEP-SKID-00006B
Four (4) lifting yokes. One lifting yoke for three (3) separator vessels, two lifting yokes for three (3) reboiler and support frame assemblies, and one lifting yoke for three (3) recirculation pumps	"Note 1"
Two (2) FEP Reboiler Steam Condensate Transfer Stations including level tank, transfer pump and condensate recycle pump.	FEP-VSL-00021 FEP-PMP-00010A FEP-PMP-00010B FEP-VSL-00022 FEP-PMP-00011A FEP-PMP-00011B

Note 1: Stainless steel or plastic tags (foil strip is not acceptable) shall be firmly attached by stainless steel wire or stainless steel screws to each separate item. Each tag shall be stamped with, as a minimum: (1) Purchase Order Number, (2) Purchase Order item number, and (3) Equipment/Instrument Tag number.

Treated LAW Evaporator (TLP) System

Equipment	Tag
One (1) TLP Separator Vessel with support structure, three layers of de-entrainment trays, two layers of mesh pads and sprays.	TLP-SEP-00001
One (1) TLP Reboiler with Graylocs and PUREX nozzles installed in accordance with this specification and stainless steel structural support frame.	TLP-RBLR-00001
One (1) TLP Recirculation Pump including motor, pump seals, and adjustable speed drive. The pump inlet and outlet pipe ends prepared for butt welding.	TLP-PMP-00001
Two (2) LAW SBS Feed Pumps with base plate, motor, pump seals, and adustable speed drive.	TLP-PMP-00005A TLP-PMP-00005B
Two (2) TLP Concentrate Pumps with base plate, motor, pump seals, and adjustable speed drive.	TLP-PMP-00011A TLP-PMP-00011B
One (1) TLP Condenser skid consisting of Primary Condenser, 1st stage steam ejector, Intercondenser, 2nd stage steam ejector, Aftercondenser and interconnecting piping.	TLP-COND-00001 TLP-COND-00002 TLP-COND-00003 TLP-EJCTR-00064 TLP-EJCTR-00067
One (1) TLP Condensate Vessel with support.	TLP-VSL-00002
Two (2) Condensate Pumps include base plate, motor, variable speed drive, and mechanical seal mounted on common skid.	TLP-PMP-00002A TLP-PMP-00002B
One (1) set of offgas piping 30" diameter from Separator to Primary Condenser with pipe hangers.	"Note 1"
One (1) TLP steam conditioning Assembly consisting of a steam supply flow control valve, a desuperheater and flow element..	TLP-SKID-00008
One (1) TLP Reboiler Steam Condensate Transfer Station including level tank, transfer pump and condensate recycle pump.	TLP-VSL-00047 TLP-PMP-00012A TLP-PMP-00012B

Note 1: Stainless steel or plastic tags (foil strip is not acceptable) shall be firmly attached by stainless steel wire or stainless steel screws to each separate item. Each tag shall be stamped with, as a minimum: (1) Purchase Order Number, (2) Purchase Order item number, and (3) Equipment/Instrument Tag number.

1.2.2 Provide a guarantee that all equipment listed in section 1.2.1 will perform in accordance with the requirements of this specification and all referenced codes, standards, and documentation in section 2 of this specification. Process warranty shall include demonstration of compliance of the Seller's provided evaporator system during testing per section 7.2 of this specification with the boil-off and decontamination factor requirements. The process warranty is provided with the following conditions: (1) the evaporator systems are operated per Seller's instructions within mutually agreed parameters and chemical analytes that are representative of waste and process conditions, and (2) mutual agreement that foaming within the Separator Vessel is adequately controlled by the Buyer-supplied antifoaming reagent.

1.2.3 Perform sizing calculations and process performance modeling to ensure that each component of the evaporator systems is properly specified to ensure desired performance.

1.2.4 Provide the following nonreplaceable components/equipment which shall attain a 40-year life:

- Separator vessels and all their internal parts (exception made for demister pad life).
- Section of separator offgas pipework located inside the R5/C5 black cells.

1.2.5 Deleted.

1.2.6 Provide three (3) steam conditioning equipment necessary to reduce plant pressure steam to Seller's provided optimal saturated steam condition for reboiler operation. Provide specifications (i.e pipe diameter, associated equipment and layout) for reboiler shell vacuum/vent line.

1.2.7 Provide specifications and data sheets during contract performance for Buyer to procure the following equipment/components.

- FEP feed pumps (FEP-PMP-00007A/B)
- FEP concentrate pumps (FEP-PMP-00008A/B)

1.2.8 Provide evaporator skids, equipment, components, and structural supports with the materials of construction as specified per this specification and on the attached data sheets in section 2 of the MR. The structural supports for evaporator equipment shall match with Buyer's provided embed layout.

1.2.9 Provide evaporator systems that accommodate the wall penetrations, piping layout, equipment dimension envelopes, and equipment locations as specified in Appendices H, I, and J.

1.2.10 Provide stainless steel skid framing to match Buyer embed plates for all three separator vessels. The vessel skid shall conform to the proposed skid layout dimensions shown in the Appendix F.

1.2.11 Provide below-the-hook lifting devices for installation, commissioning, and operation/maintenance of the demister pads assembly, reboiler, and recirculation pump. These will include lifting yokes, beams, fixtures, etc., according to Buyer design constraints for remote handling, which will be provided in 30 % design review stage. Seller is also to provide all special lifting equipment required for installation and maintenance of the evaporator systems.

1.2.12 Provide seismic analysis for evaporator structures, systems, and components. Seismic analysis shall also be performed for reboiler and support frame assemblies. Seismic model shall include: (1) vessel/equipment, (2) skid frames, and (3) supporting posts. For post/embeds locations and details, see drawings 24590-PTF-DD-S13T-00023 thru -0030, 24590-PTF-DD-S13T-00049, 24590-PTF-SS-S15T-00311 thru -00318, 24590-PTF-SS-S15T-00352, and 24590-PTF-SS-S15T-00354. The seismic response spectra and damping values for the performance of the seismic analysis **are provided in the Appendix V.**

1.2.13 Provide the thermal and static stress analyses for the evaporator structures, systems, and components. Seller shall also provide fatigue analysis to support a

40 year design life for the evaporator system. The fatigue analysis shall include all calculations and all supporting data. Buyer will provide the necessary cyclic data for Seller to perform an assessment regarding the fatigue life of the equipment. However, Seller will be responsible for confirmation that the cyclic data has been accurately interpreted before proceeding with the component fatigue analysis.

1.2.14 Identify all interfaces and requirements for external connections with equipment and services supplied by the Buyer. The interface system data parameters for use in each of the evaporator systems shall include, as a minimum, the following:

Inlet Conditions:

- Feed (flow rate @ 77 °F)
- High pressure steam **(see section 3.4.3.3)**
- Service Water (flow rate)
- Antifoam (flow rate)
- Instrument air (flow rate @ pressure)
- Cooling water (flow rate @ 75 °F)
- Operating electrical (kW)
- Installed electrical (kW)

Outlet Conditions:

- Steam Condensate (volumetric flow rate & temperature)
- Process Condensate (volumetric flow rate & temperature)
- Vent System (mass flow rate & temperature)
- Concentrate waste (volumetric flow rate & temperature)

1.2.15 Provide completed Instrument and Mechanical data sheets for all instruments and equipment in the 60 % design review package, utilizing Buyer's supplied instrument data sheet samples attached in the section 2 of the MR as templates. Buyer will procure the required instruments as detailed by the Seller's control philosophy documents (data sheets) for installation by others. Instrumentation shall conform to 24590-WTP-3PS-JQ07-T0001.

1.2.16 Provide the following for instrumentation and controls of Seller's supplied evaporator systems, equipment, and components to support Seller's software development. Any effect that the evaporator control strategy has on equipment operating parameters (i.e., pump flow rates, line flushes, feed and concentrate takeoff strategies, temperature, or pressure) will be mutually agreed upon prior to being implemented into the design.

- P&IDs
- Instrument data sheets
- Instrument loop diagrams
- Instrument location diagrams
- Control philosophies
- Functional descriptions
- Installation details
- Instrument index which includes functional test and operational set points
- Control and sequencing requirements

- Instrumentation and controls for the FEP evaporator feed and concentrate systems.

1.2.17 Provide a reliability analysis and documentation for each of the three (3) evaporator systems in accordance with the following:

1.2.17.1 A complete Failure Modes and Effects Analysis (FMEA) shall be performed on all the equipment that falls within Seller's scope of supply. This shall include associated components such as vessels, remote handling equipment, pumps have associated valves, (for isolation, for maintenance, for cross-ties, etc.) that have electronic control system which are used for process variability (e.g., flow rate). All support systems (e.g., power, air, water, steam, etc.) will be assumed to be 100 % reliable and will not be considered in the FMEA. Structural failure modes will be limited to seismic events, based on whatever seismic analyses have been performed to support the design. The FMEA shall follow in MIL-STD-1629A as close as possible. The equivalent standard actually used to perform the FMEA shall be provided as a reference (including version and year) at the 60 % design review. Also, an explanation shall be included to demonstrate how the standard has been applied. Failure modes for a reboiler are at least as follows: (1) pin hole, (2) crack, and (3) tube rupture. In addition, Seller shall indicate the possibility of the reboiler tube rupture without precursor of pin hole or crack. Determination of the possibility of reboiler tube rupture without a precursor of a pin hole or crack can be made with a qualitative argument based on fracture mechanics. No stress analysis or fracture mechanics calculations will be required to support the qualitative assessment. Failure modes for the remaining components covered by the FMEA shall be as determined by the Seller; however, the basis for the failure mode shall be specified.

1.2.17.2 Failure rate data for the purposes of an availability assessment (performed by Seller) will be derived using the following hierarchy:

- Supplier In-Service Data
- In-Service Data of similar equipment, preferably in similar applications
- Generic Documented Failure Rate Data – data taken from recognized data sources, e.g., Dexter & Perkins, NPRD 1995, etc.

The specific data source shall be provided at the 60 % design review

1.2.17.3 A maintainability analysis will be undertaken in concert with the Buyer. The analysis will address preventative and corrective maintenance activities and estimate the required maintenance for the reboiler and appurtenances.

1.2.17.4 A recommended spare parts list, operations manuals, and maintenance manuals shall be provided.

1.2.17.5 Assume operations are 8,760 operating hours per year.

1.2.18 Provide an analysis of operating life for separator vessel, including its internal demister pads, separation trays, and feed distribution, reboiler, and recirculation pump. Justify all assumptions and references.

1.2.19 Provide structural support requirements and recommended support locations for recirculation pumps (i.e., load points, weight distribution, and maximum weight, geometry of equipment, and location of center gravity). In addition, identify areas that cannot be used as load points. Equipment support locations shall be mutually agreed with the Buyer due to remote handling requirements in the hot cell.

1.2.20 Provide design and fabrication of three support frames for reboilers. The support frame shall be welded to the reboiler and designed to force the thermal expansion of all nozzles (PUREX and remote clamp connectors) upward. Upper support points can be maintained for a lateral guide support. The structural supports for reboiler shall meet BNI remoteability requirements such as weight, remotely removable, airlock sizing, crane and impact wrench specified in this document.

1.2.21 Nozzles shall be located to ± 1/4 inch diametric tolerance by the hole in support frame as relative to the master dowel of the reboiler and support frame assembly. Nozzles shall be perpendicular / parallel within 0.5 degree or 1/4 inch whichever is smaller relative to the datum formed by the lower base plate of the reboiler and support frame assembly.

1.2.22 For reboiler nozzle locations, see Appendix P. Nozzles shall be located in accordance with 1.2.21.

1.2.23 Provide demonstration and recorded VHS format video tape for demister pad removal and replacement in Seller shop test. Buyer shall be notified prior to demonstration.

1.2.24 Provide radiographic film with technique and reader sheets. Exposed film must be sent, along with a copy of the technique and reader sheets in accordance with section 3 of the MR. Film must be suitably packaged to preclude moisture and handling damage.

1.2.25 Provide any necessary special remote repair tools for the reboiler and support frame assemblies and recirculation pumps. Special tools shall not include tools readily available in the commercial market. Also, provide a list of commercially available tools needed.

1.2.26 Provide final inspection of completed vessels. Buyer will not be designating a representative to carry out final inspections of the vessels as described per Buyer specification 24590-WTP-3PS-MV00-T0001, *Pressure Vessel Design and Fabrication.*

1.2.27 Provide personnel to perform dimensional measurements for reboiler and support frame assembly, and recirculation pumps at the Seller's shop.

1.2.28 Provide certified reports for all components subject to any heat treatment during manufacture.

1.2.29 Provide procedures suggesting how the integrated testing of evaporator system functionality be conducted by Buyer at the Hanford jobsite per section 7.2 of this specification. Technical support for installation, testing and commissioning will be under a separate contract.

1.2.30 Provide design documents in progressively complete package form. Design reviews at 30 %, 60 %, 90 % and Final Design to resolve all outstanding issues are planned to include face-to-face discussions between Buyer's personnel and Seller's personnel at Buyer's location. Future meetings will be arranged after Design Review Package Materials have been reviewed and meeting agenda have been established. The discussions are intended to help establish/clarify interface points in system requirements, review design/design progress, design documents, exchange ideas/information, provide design direction. See G-321-E Form for document submittal requirements.

1.2.31 Perform a coupled seismic response spectra dynamic analysis that will qualify the recirculation piping, offgas piping, and provide vessel nozzle loads & nozzle loads at the Grayloc connection on each jumper. See Appendix V for requirement details on coupled dynamic analysis.

1.2.32 Perform detailed FEA uncoupled seismic response spectra dynamic analysis of all SC-I/SC-II evaporator components (including the individual components' internals and frames). See Appendix V for requirement details on FEA uncoupled analysis. Equipment static method is not permitted.

1.3 Work by Others

Any item not specifically listed as being supplied by the Buyer shall be provided by the Seller.

1.3.1 Provide installation labor.

1.3.2 Provide equipment shipment, unloading and storage at Buyer's site.

1.3.3 Provide Instrumentation and controls (including installation). Provide Buyer internal standards for digital control system equipment and will specify and procure the control system equipment based on the necessary I/O requirements detailed by Seller.

1.3.4 Instrument location information for instrument location drawings.

1.3.5 Generate control logic in Buyer standard format using the final control loop definitions, system interlocks and alarms, system control philosophies, and control and sequencing requirements provided by Seller.

1.3.6 Procure the digital control system components. Buyer will provide the "Device" and "I/O" address of the serial communications link for each instrument for inclusion in the Instrument Index.

1.3.7 Perform the inspection of dimensional measurement activities for separator vessels, reboilers, and recirculation pumps.

1.3.8 Perform remote handling verification test for reboilers and support frame assemblies, recirculation pumps, and recirculation pipework jumper functionality at Buyer site. Lift tests shall be performed per section 3.19.8 by Seller prior to shipment.

1.3.9 Provide the appropriate seismic response spectra and damping values for Seller to perform the evaporator equipment skid (including reboiler and support frame assemblies) seismic analyses.

1.3.10 Provide video/camera systems for the Seller's provided demister pad removal systems.

1.3.11 Provide heat tracing, seismic review, and any necessary uninterruptible power supplies.

1.3.12 Provide all the piping, instrumentation and controls for the antifoam systems per Seller design and specification.

1.3.13 Provide all valves (including control valves) located in the jumpers for remote maintenance in the R5/C5 hot cell.

1.3.14 Provide design and fabrication for all piping, jumpers, and connectors for the recirculation pipework. This includes the piping connecting the separator vessel to the recirculation pump, the recirculation pump to the reboiler nozzle, and the reboiler nozzle to the separator vessel for two FEP evaporator systems and the TLP evaporator system.

1.3.15 Provide structural supports per Seller's structural support requirements for three recirculation pumps (FEP-PMP-00009A/B and TLP-PMP-00001) and recirculation piping/jumpers.

1.3.16 Provide hot cell process equipment platform (PEP) for all reboiler and support frame assemblies and recirculation pumps.

1.3.17 Provide the necessary cyclic data for Seller to perform an assessment regarding the fatigue life of the equipment. However, Seller will be responsible for confirmation that the cyclic data has been accurately interpreted before proceeding with the component fatigue analysis.

1.3.18 Provide remote handling verification test for reboiler and support frame assemblies, recirculation pumps, and recirculation pipework jumper functionality.

1.3.19 Provide all jumpers, jumper mounted equipment, and pipework connections to the separator vessel (excluding the separator offgas pipework) within the black cell.

1.3.20 Provide all pipework between Seller's provided skids (excluding the evaporator separator offgas pipework and piping connecting condenser skids and steam ejectors).

1.3.21 Provide specification of process and utility piping jumper interfaces and their locations.

1.3.22 Provide Jumper stack-up tolerance study.

1.3.23 Provide shielding for penetrations through the walls and floors.

1.3.24 Provide hot cell remote handling equipment (including impact wrenches and standard lifting equipment).

1.3.25 Provide specification for antifoam reagents.

1.3.26 Provide feed vessels (FEP-VSL-00017A/B and TLP-VSL-00009A/B).

1.3.27 Provide concentrate receipt vessels (UFP-VSL-00001A/B and TCP-VSL-00001).

1.3.28 Provide Vessel Vent system.

1.3.29 **Deleted**

1.3.30 Provide FEP feed pumps (FEP-PMP-00007A/B) and concentrate pumps (FEP-PMP-00008A/B) (refer to 1.2.7).

1.3.31 Provide utility (i.e., air, steam, cooling water) supply systems. However, Seller is responsible to provide steam condition skids for reboiler operation.

1.3.32 Interface drawings for evaporator equipment skids.

1.4 Definitions

1.4.1 *Skid:* A skid is a group of components that can be manufactured and installed as a unit. These skid units are structurally self-supporting, allowing the skid to be handled by crane. Whenever practical, skids will contain all the equipment associated with the process, including vessels, piping, and supports.

1.4.2 *ALARA:* As Low As Reasonably Achievable (ALARA) documentation requirements apply to systems, structures, and components (SSCs) that have the potential to affect radiation doses, contamination levels, or releases to the environment.

1.4.3 *Buyer's Representative(s)*: The Buyer's designee(s), who shall witness onsite operations at the Seller and sub-seller sites and perform onsite inspections and surveillances.

1.4.4 *Black Cell (R5/C5)*: is a sealed concrete structure containing very high radiation and contamination where human access is prohibited during the normal operating lifetime of the cell and maintenance is not performed in the cell.

1.4.5 *C1:* Uncontrolled Area.

1.4.6 C2: Controlled area. Personnel must be verified free of contamination prior to exit.

1.4.7 *C3:* Contamination classification for plant areas that are ordinarily free of contamination, but have the potential of being contaminated.

1.4.8 *C5:* Contamination classification for plant areas that are considered high contamination areas. Access to C5 areas is not permitted.

1.4.9 *Design Basis Earthquake (DBE):* A specification of the ground motion at the site.

1.4.10 *Hot Cell (R5/C5):* A room that is restricted from personnel due to high radiation. A hot cell is constructed with thick concrete walls usually lined internally with stainless steel sheet. Process equipment located in the hot cell is connected to wall nozzles using jumpers. Process equipment in the hot cell is skid mounted and designed for either remote maintenance using crane-mounted services or, preferably, no maintenance over the 40 year design life of the WTP.

1.4.11 *Important to Safety (ITS):* SSCs that serve to provide reasonable assurance that the facility can be operated without undue risk to the health and safety of the workers and the public. ITS encompasses the broad class of facility features addressed (not necessarily explicitly) in the top-level radiological, nuclear, and process safety standards and principles that contribute to the safe operation and protection of workers and the public during all phases and aspects of facility operations (i.e., normal operation as well as accident mitigation). ITS includes SSCs designated as Safety Class (SC), Safety Significant (SS), and **additional protection class (APC)**

1.4.12 *Jumper:* A remotely removable section of pipework usually incorporating connector heads and some items of process equipment (i.e., valves, instruments, etc.).

1.4.13 *Commercial Material (CM)*: SC items and associated services (those that are not designated as SC or SS) that are manufactured using standard commercial practices.

1.4.14 *Paragraph*: When a paragraph of this specification, referenced documents, referenced codes, or referenced standards is referenced in this specification, the paragraph referenced and all subparagraphs and sub-subparagraphs of the paragraph referenced shall be considered inclusive.

1.4.15 *Quality (Q):* SC **and SS** items. NQA-1 (1989) compliance is required. **QL-1 and QL-2 designations are used by the Seller to comply with other referenced specification requirements (i.e weld, design). These designations meet NQA-1 (Q) requirements and are not necessarily reflected in their associated Buyer's P&IDs.**

1.4.16 ***Deleted***

1.4.17 *Rad*: A unit of energy absorbed from ionizing radiation, equal to 100 ergs per gram or 0.01 joules per kilogram of irradiated material.

1.4.18 ***Additional Protection Class***: **APC** are ITS SSCs that are neither SC nor SS.

1.4.19 *R1*: Unrestricted area.

1.4.20 *R2*: Radiation controlled area.

1.4.21 *R3:* Radiation classification for plant areas considered average. Contamination area requiring anti-contamination clothing for entry. At early design stages, when insufficient information is available regarding worker occupancy, an initial target radiation level of 2.5 mRad/hr is to be used for the R3 classification.

1.4.22 *R4:* Radiation area (maximum).

1.4.23 *R5:* Radiation classification for areas considered to be high or very high radiation areas.

1.4.24 Reboiler and support frame assembly: Reboiler and pipe work up to and including PUREX nozzles, remote clamp connector hubs, and all permanently attached frame work.

1.4.25 *Safety Class (SC):* SSCs that, by performing their specified safety function, prevent workers or the maximally exposed member of the public from receiving a radiological exposure that exceeds the accident exposure standards defined in the Safety Requirements Document (SRD). SC also applies to those features that, by functioning, prevent the worker or maximally exposed member of the public from receiving a chemical exposure that exceeds the ERPG-2 (AIHA 1988) chemical release standard. Those features credited for the prevention of a criticality event are also designated as SC.

1.4.26 *Safety Significant (SS)*: SSCs needed to achieve compliance with the radiological or chemical exposure standards for the public and workers during normal operation; and SCs that can, if they fail or malfunction, place frequent demands on or adversely affect the function of SC SSCs.

1.4.27 *Seismic Category I (SC-I):* Equipment/tanks important to safety, which have a seismic safety function. For the design of Seismic Category I equipment/tanks, no credit for inelastic energy absorption is allowed. Seismic Category I equipment/tanks shall be functional during and after a Design Basis Earthquake (DBE).

1.4.28 *Seismic Category II (SC-II):* Equipment/tanks important to safety whose failure during a seismic event could prevent a Seismic Category I structure, system, or component (SSC) from performing its seismic safety function. For the design of Seismic Category II equipment/tanks, credit for inelastic energy absorption is allowed. Seismic Category II equipment/tanks shall maintain control and confinement of hazardous materials during and after a Design Basis Earthquake (DBE), but do not need to be functional.

1.4.29 *Seismic Category III Equipment (SC-III):* (a) SC and SS SSCs that do not have a natural phenomena hazard (NPH) safety function. (b) SCs that have a seismic safety function solely because they protect workers and members of the public from exposure to chemical hazards. (c) **APC** SSCs that provide primary

confinement of significant inventories of radioactive materials, but in amounts less than quantities that require an SC or SS designation.

1.4.30 *Seismic Category IV (SC-IV)*: **APC** SSCs that have been designated as **APC** do not provide primary confinement of significant inventories of radioactive materials.

1.4.31 *Special Tools:* Any tooling which is not commercially available required to perform maintenance on the evaporator system.

1.4.32 *Acronyms*

- ALARA As Low As Reasonably Achievable
- AISC American Institute of Steel Construction
- ANSI American National Standards Institute
- **APC** **Additional Protection Class**
- ASD Adjustable Speed Drive
- ASD Manual of Steel Construction (Allowable Stress Design)
- ASME American Society of Mechanical Engineers
- ASNT American Society of Nondestructive Testing
- ASTM American Society for Testing and Materials
- AWS American Welding Society
- CFR Code of Federal Regulations
- CM Commercial grade
- DBE Design Basis Earthquake
- DOE US Department of Energy
- DOT Department of Transportation
- **FEA** **Finite Element Analysis**
- FEP Waste Feed Evaporator Process System
- GPM Gallons per minute
- ITS Important to Safety
- LAW Low-Activity Waste
- M Molarity
- MDS Material Data Sheet
- MR Material Requisition
- MSDS Material Safety Data Sheet
- NDE Nondestructive Evaluation/Examination
- NPS Nominal Pipe Size
- NQA Nuclear Quality Assurance
- OBE Operating Basis Earthquake
- ORP DOE Office of River Protection
- PEP Process Equipment Platform
- PMI Positive Material Identification
- P&ID Piping and Instrumentation Diagram
- PTF Pretreatment Facility
- QA Quality Assurance
- QAP Quality Assurance Program
- QAM Quality Assurance Manual
- QL Quality Level

- SBS Submerged Bed Scrubber
- SC Safety Class
- SS Safety Significant
- SC Seismic Category
- SSCs Structures, Systems, and Components
- SSPC The Society for Protective Coating
- RPP-WTP River Protection Project-Waste Treatment Plant
- TID Total Integrated Dose
- TLP Treated LAW Evaporator Process System
- SC Seismic Categor
- SDDR Supplier Deviation Disposition Request
- SG Specific Gravity
- UBC Uniform Building Code
- WT % Weight percent
- WTP Hanford Tank Waste Treatment and Immobilization Plant

1.5 Mechanical Data Sheets

Specific design parameters and requirements for evaporator components will be shown on the individual Mechanical Data Sheet (MDS) in section 2 of the MR. The data shall be considered as preliminary. Seller shall verify thermal, hydraulic, mechanical and process designs. Where necessary, the Seller shall change the data in order to furnish complete thermal, hydraulic, mechanical, and process guarantees. Any difference between Seller's final design and Buyer's preliminary data shall be brought to Buyer's attention for resolution and approval. Seller shall supply evaporator components that meet specified materials of construction, quality level, and seismic category as described on the MDS. The nominal feed chemistries used for the design should be based on Appendix A and B of this specification. Process design of the evaporator system is given in Appendix D of this specification.

1.6 Safety/Quality/Seismic Classifications

1.6.1 The quality level (QL) and seismic category (SC) of the major components of the evaporator system are specified on the data sheets in section 2 of the MR and Appendix E of this specification.

1.6.2 Seismic category (SC) classification requirements are specified in 24590-WTP-3PS-SS90-T0001, Specification for Seismic Qualification of Seismic Category I/II Equipment and Tanks and 24590-WTP-3PS-FB01-T0001, Specification for Seismic Qualification for Seismic Category III/IV Equipment and Tanks.

2 Applicable Documents

2.1 General

2.1.1 Work shall be done in accordance with the referenced codes, standards, and documents listed below, which are an integral part of this specification.

2.1.2 When specific chapters, sections, parts, or paragraphs are listed following a code, industry standard, or reference document, only those chapters, sections, parts, or paragraphs of the document are applicable and shall be applied. If a date or revision is not listed, the latest issue, including addenda, at the time of award shall apply. Pre-approved acceptable alternate editions are listed in section 4.2.12. For codes and standards listed below, the specific revision or effective date of codes and standards that they incorporate by reference (daughter codes and standards), shall be followed. When more than one code, standard, or referenced document covers the same topic, the requirements for all must be met with the most stringent governing. For commercial grade quality items, Seller may use any year of the ASME or ASTM standards for materials.

2.2 Codes and Industry Standards

2.2.1 ASME B31.3-1996, Process Piping

2.2.2 ASME B16.5-1988, Pipe Flanges and Flanged Fittings NPS 1/2 Through NPS 24 Addend A

2.2.3 ASME B16.47-1990, Large Diameter Steel Flanges NPS 26 through NPS 60 Addenda A

2.2.4 ASME B18.15-1985, Forged Eye Bolts

2.2.5 ASME Boiler and Pressure Vessel Code, Section VIII, Div. 1, Rules for Construction of Pressure Vessel

2.2.6 ASME Boiler and Pressure Vessel Code, Section IX-**1995 or later**, Welding and Brazing Qualifications

2.2.7 ASME NQA-1-1989, Quality Assurance Program Requirements for Nuclear Facility Applications

2.2.8 ASME Y14.100, Engineering Drawing Practices

2.2.9 AISC ASD, 9th Edition, Manual of Steel Construction, Allowable Stress Design

2.2.10 AISC N690-1994, Specification for the Design, Fabrication, and Erection of Steel Safety-Related Structures for Nuclear Facilities

2.2.11 ANSI N14.6, For Radioactive Materials-Special Lifting Devices for Shipping Containers Weighing 10,000 Pounds (4500 kg) or More

2.2.12 ASTM F593, Standard Specification for Stainless Steel Bolts, Hex Cap Screws, and Studs

2.2.13 ASTM F594, Standard Specification for Stainless Steel Nuts

2.2.14 AWS D1.6, Structural Welding Code-Stainless Steel

2.2.15 AWS D9.1-**1984 or later**, Sheet Metal Welding Code

2.2.16 IEEE Std 1023-**1988**, IEEE Guide for the Application of Human Factors Engineering to Systems, Equipment, and Facilities of Nuclear Power Generating Stations

2.2.17 MIL-STD-1629A, Military Standard, Procedures for Performing A Failure Mode, Effects and Criticality Analysis

2.2.18 UBC-1997, Uniform Building Code

2.2.19 10 CFR 835, Occupational Radiation Protection

2.2.20 49 CFR 173, General Requirements for Shipments and Packaging. Code of Federal Regulations. U.S. Department of Transportation, Washington, D.C.

2.2.21 29 CFR 1910, Occupational Safety and Health Standards

2.2.22 NFPA 101, Code for Safety to Life from Fire in Buildings and Structures

2.2.23 NFPA 70 -1999, National Electric Code

2.2.24 SSPC-SP10, Near White Metal Blast Cleaning

2.2.25 SSPC-SP11, Power Tool Cleaning to Bare Metal

2.2.26 WAC 296-24, General Safety and Health Standards

2.2.27 595, Colors Used in Government Procurement

2.2.28 E 709, Standard Test Method for Magnetic Particle Examination

2.2.29 ASCE 4-98, Seismic Analysis of Safety-Related Nuclear Structures and Commentary.

2.2.30 ASTM A193 Editions 1991 through 2005 Standard Specification for Alloy-Steel and Stainless Steel Bolting Materials for High-Temperature Service

2.2.31 ASTM A194 Edition 1991 through 2005a, Standard Specification for Carbon and Alloy Steel Nuts for Bolts for High Pressure or High Temperature Service

2.2.32 ASTM A582, Any Year, Standard Specification for Free-Machining Stainless and Heat-Resisting Steel Bars, Hot-Rolled and Cold Finished.

2.2.33 ASTM A564 Editions 1988b, 1989, 1991, 1992, 1992a, 1994, 1995, 1997, 1999, 2001, 2002, 2002a, 2004, Standard Specification for Hot Rolled and Cold-Finished Age-Hardening Stainless Steel Bars and Shapes

2.2.34 SSPC-SP10, Near White Metal Blast Cleaning

2.2.35 SSPC-SP11, Power Tool Cleaning to Bare Metal

2.2.36 API 610-1995 Centrifugal Pumps for General Refinery Service

2.3 Reference Documents

2.3.1 Interfacing References

2.3.1.1 24590-WTP-3PS-G000-T0001,General Specification for Supplier Quality Assurance Program Requirements

2.3.1.2 24590-WTP-3PS-G000-T0002, Specification for Positive Material Identification (PMI)

2.3.1.3 24590-WTP-3PS-G000-T0003, General Specification for Packaging, Shipping, Handling, and Storage Requirements

2.3.1.4 24590-WTP-3PS-NWP0-T0001, Engineering Specification for General Welding and NDE Requirements for Supplier Fabricated Piping

2.3.1.5 24590-WTP-3PS-P000-T0001, Engineering Specification for Piping Material Classes General Description and Summary

2.3.1.6 24590-WTP-3PS-SS00-T0002, Engineering Specification for Welding of Structural Stainless Steel and Welding of Structural Carbon Steel to Structural Stainless Steel

2.3.1.7 24590-WTP-3PS-SS90-T0001, Specification for Seismic Qualification of Seismic Category I/II Equipment and Tanks

2.3.1.8 24590-WTP-3PS-FB01-T0001, Engineering Specification for Structural Design Loads for Seismic Category III & IV Equipment and Tanks

2.3.1.9 24590-WTP-3PS-EVV1-T0001, Specification for Low Voltage Adjustable Speed Drives

2.3.1.10 24590-WTP-3PS-MUMI-T0002, Specification for Low Voltage Induction Motors

2.3.1.11 24590-WTP-3PS-MPC0-T0002, Engineering Specification for General Centrifugal Pumps to Meet Requirements of ASME B73.1M-1991 and ASME B73.2M-1991 for Commercial (CM) Components

2.3.1.12 24590-WTP-3PS-M000-T0002, General Specification for Mechanical Handling Equipment Design and Manufacture

2.3.1.13 24590-WTP-3PS-MJJ0-T0001, Engineering Specification for Lifting Beams for Mechanical Handling Equipment Important to Safety Quality Level II

2.3.1.14 24590-WTP-3PS-MV00-T0001, Engineering Specification for Pressure Vessel Design and Fabrication

2.3.1.15 24590-WTP-3PS-MV00-T0002, Engineering Specification for Seismic Qualification Criteria for Pressure Vessels

2.3.1.16 24590-WTP-3PS-MES0-T0001, Engineering Specification for Shell and Tube Heat Exchangers

2.3.1.17 24590-WTP-3PS-MVB2-T0001, Engineering Specification for Welding of Pressure Vessels, Heat Exchangers, and Boilers

2.3.1.18 24590-WTP-3PS-JQ07-T0001, Engineering Specification for Instrumentation for Package Systems

2.3.1.19 24590-WTP-3PS-PS02-T0001, Engineering Specification for Shop Fabrication of Piping

2.3.1.20 24590-WTP-3PS-SS00-T0001, Engineering Specification for Welding of Carbon Structural Steel.

2.3.1.21 24590-WTP-3PS-EKP0-T0001, Engineering Specification for Electrical Requirements for Packaged Equipment

2.3.1.22 24590-WTP-3PS-PP00-T0002, Engineering Specification for Dimensional Record Program.

2.3.2 Developmental References

2.3.2.1 24590-PTF-3YD-FEP-00001, System Description for Waste Feed Evaporation Process (FEP)

2.3.2.2 24590-PTF-3YD-TLP-00001, System Description for Treated LAW Evaporation Process (TLP)

2.3.2.3 24590-WTP-3PS-MV00-T0003, Engineering Specification for Pressure Vessel Fatigue Analysis

2.4 Reference Drawings / Data Sheets

2.4.1 24590-WTP-MV-M59T-00001, Pressure Vessel Tolerances Standard Details

2.4.2 24590-WTP-MV-M59T-00007, Thermowell Connection Standard Details

2.4.3 24590-WTP-MV-M59T-00009, Lifting Lugs Standard Details

2.4.4 24590-WTP-MV-M59T-00010, Tailing Lug Standard Details

2.4.5 24590-WTP-MV-M59T-00011, Wash Rings Standard Details

2.4.6 24590-WTP-MV-M59T-00012, Grounding Lug Standard Details

2.4.7 24590-WTP-MV-M59T-00016001, Vessel Connections Standard Details Sheet 1 of 3

2.4.8 24590-WTP-MV-M59T-00016002, Vessel Connections Standard Details Sheet 2 of 3

2.4.9 24590-WTP-MV-M59T-00016003, Vessel Connections Standard Details Sheet 3 of 3

2.4.10 24590-WTP-MV-M59T-00017, Vessel Inspection Manway Standard Details

2.4.11 24590-WTP-MV-M59T-00018, Vessel Name Plate Standard Details

2.4.12 24590-WTP-MV-M59T-00026, Anchor Bolt Chair Details for Vertical Vessels

2.4.13 24590-WTP-M0-M10T-00004, HLW & PTF Vitrification Systems HSH, RWH, PFH, PIH Design Proposal Drawing 3 Ton Capacity Lifting Hook

2.4.14 24590-WTP-M6-50-00001, P&ID Symbol and Legend Sheet 1 of 6

2.4.15 24590-WTP -M6-50-00002, P&ID Symbol and Legend Sheet 2 of 6

2.4.16 24590-WTP -M6-50-00003, P&ID Symbol and Legend Sheet 3 of 6

2.4.17 24590-WTP -M6-50-00004, P&ID Symbol and Legend Sheet 4 of 6

2.4.18 24590-WTP -M6-50-00005, P&ID Symbol and Legend Sheet 5 of 6

2.4.19 24590-WTP -M6-50-00006, P&ID Symbol and Legend Sheet 6 of 6

2.4.20 24590-PTF-P1-P01T-00001, Pretreatment Building General Arrangement Plan at El. 0'-0"

2.4.21 24590-PTF-P1-P01T-00002, Pretreatment Building General Arrangement Plan at El. 28'-0"

2.4.22 24590-PTF-P1-P01T-00007, Pretreatment Building General Arrangement Section A-A

2.4.23 24590-PTF-P1-P01T-00008, Pretreatment Building General Arrangement Section B-B

2.4.24 24590-PTF-P1-P01T-00009, Pretreatment Building General Arrangement Section C-C

2.4.25 24590-PTF-P1-P01T-00010, Pretreatment Building General Arrangement Section D-D

2.4.26 24590-PTF-P1-P01T-00011, Pretreatment Building General Arrangement Section E-E

2.4.27 24590-PTF-P1-P01T-00012, Pretreatment Building General Arrangement Sect. F-F and Sect. G-G

2.4.28 24590-PTF-P1-P01T-00013, Pretreatment Building General Arrangement Sect. H-H and Sect. J-J

2.4.29 24590-PTF-P1-P01T-00014, Pretreatment Building General Arrangement Sect. K-K and Sect. L-L

2.4.30 24590-PTF-P1-P01T-00015, Pretreatment Building General Arrangement Sect. M-M and Sect. N-N

2.4.31 24590-PTF-P1-P01T-00016, Pretreatment Building General Arrangement Sect. P-P and Sect. Q-Q

2.4.32 24590-PTF-P1-P01T-00017, Pretreatment Building General Arrangement Sect. R-R

2.4.33 24590-PTF-DD-S13T-00022, Pretreatment Facility Structural Concrete Embedments Key Plan Elevation 0 ft – 0 in

2.4.34 24590-PTF-DD-S13T-00023, Pretreatment Facility Structural Concrete Embedments Key Plan Elevation 0 ft – 0 in Sh 1

2.4.35 24590-PTF-DD-S13T-00025, Pretreatment Facility Structural Concrete Embedments Plan El 0 ft – 0 in Sh 3

2.4.36 24590-PTF-DD-S13T-00026, Pretreatment Facility Structural Concrete Embedments Plan El 0 ft – 0 in Sh 4

2.4.37 24590-PTF-DD-S13T-00027, Pretreatment Facility Structural Concrete Embedments Plan Elevation 0 ft – 0 in Sh 5

2.4.38 24590-PTF-DD-S13T-00028, Pretreatment Facility Structural Concrete Embedments Plan Elevation 0 ft – 0 in Sh 6

2.4.39 224590-PTF-DD-S13T-00029, Pretreatment Facility Structural Concrete Embedments Plan El. 0'-0" Sh 7

2.4.40 24590-PTF-DD-S13T-00030, Pretreatment Facility Structural Concrete Embedments Plan El. 0'-0" Sh 8

2.4.41 24590-PTF-DD-S13T-00031, Pretreatment Facility Structural Concrete Embedments Plan El. 0'-0" Sh 9

2.4.42 24590-PTF-DD-S13T-00036, Pretreatment Facility Structural Concrete Embedments EL 0 ft – 0 in Vessels Sh 1

2.4.43 24590-PTF-DD-S13T-00039, Pretreatment Facility Structural Concrete Embedments EL 0 ft – 0 in Vessels Sh 2

2.4.44 24590-PTF-DD-S13T-00042, Pretreatment Facility Structural Concrete Embedment Details EL 0 ft – 0 in Vessels Sh 1

2.4.45 24590-PTF-DD-S13T-00043, Pretreatment Facility Structural Concrete Embedment Details EL 0 ft – 0 in Vessels Sh 2

2.4.46 24590-PTF-DD-S13T-00044, Pretreatment Facility Structural Concrete Embedment Details EL 0 ft – 0 in Vessels Sh 3

2.4.47 24590-PTF-DD-S13T-00047, Pretreatment Facility Structural Concrete Embedment EL 0 ft – 0 in Misc Sh1

2.4.48 24590-PTF-DD-S13T-00049, Pretreatment Facility Structural Concrete Embedment EL 0 ft – 0 in Misc Sh 3

2.4.49 24590-PTF-MJD-PIH-00001, Mechanical Handling Data Sheet for Overhead Mast Power Manipulator

2.4.50 24590-PTF-M0-PIH-00008, Pretreatment System PIH Design Proposal Drawing 30 Ton Capacity Lifting Hook

2.4.51 24590-WTP-M61-P23T-00056, WTP Details Lower Holder Bottom Outlet Electrical Connector 2"

2.4.52 24590-PTF-SS-S15T-00311, Pretreatment Facility Structural Misc Support Steel El. 0'-0" Plan Sh 1

2.4.53 24590-PTF-SS-S15T-00312, Pretreatment Facility Structural Misc Support Steel El. 0'-0" Plan Sh 2

2.4.54 24590-PTF-SS-S15T-00313, Pretreatment Facility Structural Misc Support Steel El. 0'-0" Plan Sh 3

2.4.55 24590-PTF-SS-S15T-00314, Pretreatment Facility Structural Misc Support Steel El. 0'-0" Plan Sh 4

2.4.56 24590-PTF-SS-S15T-00315, Pretreatment Facility Structural Misc Support Steel El. 0'-0" Plan Sh 5

2.4.57 24590-PTF-SS-S15T-00316, Pretreatment Facility Structural Misc Support Steel El. 0'-0" Plan Sh 6

2.4.58 24590-PTF-SS-S15T-00317, Pretreatment Facility Structural Misc Support Steel El. 0'-0" Plan Sh 7

2.4.59 24590-PTF-SS-S15T-00318, Pretreatment Facility Structural Misc Support Steel El. 0'-0" Plan Sh 8

2.4.60 24590-PTF-SS-S15T-00352, Pretreatment Facility Structural Misc Support Steel Details Sh 3

2.4.61 24590-PTF-SS-S15T-00354, Pretreatment Facility Structural Misc Support Steel Details Sh 5

2.4.62 24590-WTP-M61-P23T-00056, WTP Details Lower Holder Bottom Outlet Electrical Connector 2".

2.4.63 24590-WTP-M61-P23T-00057, WTP Assembly Lower Holder Electrical Connector 2 Inch.

2.4.64 24590-WTP-M61-P23T-00005, WTP Details - Nozzles PUREX Male Connector 1", 2", 3", 4"

2.4.65 24590-WTP-M61N-P23T-00006, Nozzles PUREX Connector 1", 2", 3", 4"

2.4.66 24590-WTP-M61-P23T-00040, WTP Details - Kickoff Plates PUREX Connector 1", 2", 3", 4"

2.4.67 24590-WTP-M61-P23T-00057, WTP Assembly Lower Holder Electrical Connector 2 Inch.

2.4.68 24590-WTP-P61-P27T-00001, WTP Standard Jumper Details

2.4.69 24590-PTF-M6-FEP-00001, P&ID - PTF Waste Feed Evaporation Process System Evaporator Feed Vessels FEP-VSL-00017A/B.

2.4.70 24590-PTF-M6-FEP-00002, P&ID - PTF Waste Feed Evaporation Process System Separator FEP-SEP-00001A.

2.4.71 24590-PTF-M6-FEP-00003, P&ID - PTF Waste Feed Evaporation Process System Condensers & Condensate Collection FEP-VSL-00005.

2.4.72 24590-PTF-M6-FEP-00004, P&ID - PTF Waste Feed Evaporation Process System Separator FEP-SEP-00001B.

2.4.73 24590-PTF-M6-FEP-00005, P&ID - PTF Waste Feed Evaporation Process System Condensers.

2.4.74 24590-PTF-M6-TLP-00001, P&ID - PTF Treated LAW Evaporation Process System LAW SBS Condensate Receipt TLP-VSL-00009A & 9B.

2.4.75 24590-PTF-M6-TLP-00002, P&ID - PTF Treated LAW Evaporation Process System Condensate Collection TLP-VSL-00002.

2.4.76 24590-PTF-M6-TLP-00003, P&ID - PTF Treated LAW Evaporation Process System Separator TLP-SEP-00001.

2.4.77 24590-PTF-M6-STR-00001, P&ID - PTF Strontium Nitrate, Sodium Permanganate, and Anti-foam Reagent Distribution (CM).

3 Design Requirements

3.1 General

3.1.1 As Low As Reasonably Achievable (ALARA) principles shall be factored into the design and maintenance of the evaporator systems per 10 CFR 835, *Occupational Radiation Protection.*

3.1.2 Unless otherwise specified, the evaporator systems shall be designed and fabricated per applicable documents listed in section 2.0 of this specification, and the data sheets in section 2 of the MR. No changes, substitutions, or deviations shall be made without Buyer's concurrence.

3.1.3 The evaporator system design shall comply with the requirements stipulated in this specification. Seller shall conform with Buyer's requirements for hot cell wall penetrations, recirculation piping/jumper configuration, layout, dimension, location as shown in the Appendices I, J, and K. Seller shall confirm locations for all evaporator equipment are adequate for system functionality. Seller shall submit any variances to these requirements during design review stage for concurrence.

3.1.4 The evaporator piping and instrumentation sketches provided in the Appendix L of this specification illustrate the conceptual piping and instrument control of the evaporator systems. All evaporator systems or components shall have adequate control features to bring evaporator operations to a safe and stable 'shutdown' condition during an abnormal event. Seller's control design philosophy can differ from Buyer's conceptual control; however, the Seller's control system design shall conform to Buyer's specification 24590-WTP-3PS-JQ07-T0001.

3.1.5 General Arrangement drawings should be used to convey approximate equipment locations for skids. Equipment locations shown in the Appendices I, J, and K shall be maintained unless the design dictates an alternate location.

3.1.6 The Seller shall be responsible for the evaporator system design including component specification such as design parameters, sizing, pipe support loads, pipe hangers, anchors, pipe slopes and environmental protection (temperature, humidity, etc.) as required.

3.1.7 A means shall be provided to avoid accumulation of settled solids (e.g., sparging or removal of separator contents) in event of recirculation pump failure.

3.1.8 All heat exchangers including reboilers and condensers shall comply with ASME section VIII and TEMA standard, Class B. "Code Stamp" shall be provided for all Seller's provided heat exchangers.

3.1.9 Seller shall comply with nozzle loading requirements specified in **Appendix V for SC-I and SC-II vessels/equipment.**

3.1.10 Gusset plates cannot be utilized to accommodate the required nozzle loading on safety class vessels and heat exchangers.

3.1.11 The equipment shall be designed such that personnel sound level exposure outside of R5/C5 area shall not exceed 85 dBA. Seller shall clearly state how the specified sound level limit will be met.

3.1.12 All calculations, modeling, analyses, drawings, and documentation shall utilize U.S. customary units.

3.1.13 Design of the evaporator systems shall incorporate the latest and best proven technology, components, and materials for the required service conditions and performance.

3.1.14 The evaporator system model analysis, thermal analysis, design analysis, and seismic analysis shall be verified such that the final system, equipment and component design meet the requirements of this specification as well as its addenda and attachments.

3.1.15 Evaporator system equipment shall be furnished as discrete skid mounted units that are ready to integrate with the Buyer's structures, systems, and components.

3.1.16 The evaporator systems shall be identical in component count, capacity, and mode of operation and shall utilize common component types and equipment manufacturers.

3.1.17 The FEP and TLP Evaporator systems shall be designed in accordance with following feed conditions:

- Design FEP feed flow of 50 gpm
- Design TLP feed flow of 38 **gpm**
- Design feed temperature of 77 °F
- Waste feed pH of 11 – 14
- LAW SBS pH of 6.8

3.1.18 Normal design cooling water temperature of 75 °F with a peak summer maximum of 83 °F shall be used for designing/sizing all condensers. The cooling water temperature of 75 °F is valid for 85 % of the time through a year. During 15 % of the time when cooling water temperature is above 75 °F, the TLP evaporator system can be operated at a higher temperatures (i.e., 1.2 psia, 127 °F – 131 °F). This operating strategy is for short term operation and is to minimize cooling water flow.

3.1.19 Evaporator systems and components should be designed to prevent the migration of contamination into the utility / reagent systems.

3.1.20 Human factors and ergonomics shall be designed into all evaporator equipment requiring manual operations per IEEE Std 1023, *IEEE Guide for the Application of Human Factors Engineering to Systems, Equipment, and Facilities of Nuclear Power Generating Stations*.

3.1.21 Quality level, seismic category, materials of construction, design pressure, and design temperature shall be in accordance with the data sheets in section 2 of the MR and Appendix E of this specification. If a change to the requirements for

materials and/or the equipment types to be used during the execution of the contract is dictated because of design analyses, then the Seller is required to provide Buyer its recommendation for review and concurrence prior to incorporation into the design of the evaporator systems.

3.1.22 All equipment in evaporator systems requiring maintenance or removal shall have flushing and draining capability to facilitate decontamination. Design features shall minimize the need for decontamination by including sloping features, replacing sharp bends with gradual bends, etc. where practical, consistent with ALARA practices.

3.1.23 Provision for temperature instrumentation shall be jumper nozzles incorporating the required thermowell details.

3.1.24 Nozzle and flange alignment shall be within ± 0.5 degrees of design specifications.

3.1.25 Jumper nozzle connections shall be included in the evaporator systems to interface with the Buyer supplied jumpers. Location and details of the connections shall be per Appendix P.

3.1.26 The reboiler support frame detail sketches provided in the Appendix P of this specification illustrate the conceptual design to support remoteability.

3.1.27 Seller's reboiler frame design shall not protrude into the crane path as specified in Appendix P.

3.1.28 The hub type (remote clamp) connectors and PUREX nozzles are the only government-furnished equipment, which will be sent to Seller for installation. Buyer will provide Seller hydro test blanks for the remote clamp connectors (Grayloc) and the remote PUREX and other connectors for installation on the axial flow pumps and reboilers.

3.1.29 Nozzles for reboiler and support frame assemblies are to be designed to maintain positional tolerance during operational loading conditions and maintain structural integrity during and after a DBE. Preliminary loading information for the nozzle loads at Grayloc connections on the reboilers are provided in Appendix P.

3.1.30 All adjustable speed drives for pumps can be designed for non-radiation environment.

3.1.31 Seller's fabrication drawings shall be used as the document of record for fabrication of the components. Seller's specification drawings are not required to be revised and maintained in total agreement with approved fabrication drawings.

3.1.32 Regarding Buyer's specification 24590-WTP-3PS-G000-T0003, *Engineering Specification for Packing, Handling, and Storage requirements,* the center of gravity and sling points are not needed for off-gas piping pieces and separator vessel support towers because they are awkward hollow parts that do not allow a meaningful center of gravity to be determined or designed. Multiple sling

configurations are possible to affect a successful lift and should be at the discretion of site construction supervisor.

3.1.33 Seller shall provide evaporator systems in the skids for ease of transportation, installation, and replacement. Seller is responsible for equipment skid sizing and layout to fit Buyer's facility. For the baseline design, each evaporator system will comprise the following skids:

- Separator vessel skids
- Reboiler and support frame assemblies.
- TLP feed pumps skid
- TLP concentrate pumps skid
- Primary condenser skids
- Secondary condenser skids which includes inter-condenser, after-condenser, and steam ejector
- Process condensate skids which includes vessel and pump
- Steam conditioning system which includes a pressure reducing valve and control and a desuperheater
- Antifoam skids which include vessel and pumps

3.2 Basic Function

The evaporator systems employ forced circulation and vacuum evaporation. The Waste Feed Process (FEP) evaporator system consists of two (2) identical evaporators which will be installed at the west end of the pretreatment facility (PTF). The Treated Low Activity Waste Process (TLP) evaporator system will be installed at the east end of the PTF.

Each evaporator will be designed to process 100 % of the design feed flow (50 gpm for each FEP system and 39 gpm for TLP system) with an evaporation feed rate of 30 gpm and to operate independent of each other. Normal operation of the FEP evaporator system consists of one evaporator operating at a time but simultaneous operation is possible. The FEP evaporators partially evaporate Waste Feed from the Department of Energy (DOE) and various recycle streams from within the pretreatment process. The Waste Feed is evaporated in order to optimize the operation of downstream unit operations. The Waste Feed flow is varied in order to control the level in the FEP separator. The FEP evaporator shall be designed to achieve a sodium concentration of 5 to 6M.

The LAW Submerged Bed Scrubber (SBS) condensate and treated LAW are fed to the TLP evaporator simultaneously. The treated LAW feed is fed continuously and at a constant rate while the flow of SBS condensate is varied in order to control the level in the TLP separator vessel. The TLP evaporator shall be designed to achieve a sodium concentration of 8 to 10M.

The feed stream is introduced into the recirculation loop on the suction side of the recirculation pump. The recirculation pump circulates the liquor at a rate of approximately 11,000 gpm. The pump discharges liquor through evaporator reboiler, which raises the temperature of the liquor by approximately 2 to 4 °F using 2.5 psig steam throttled from 40 psig low pressure steam supply to the building. This small temperature rise is necessary to prevent the liquor from boiling (fouling) in the tubes before it reaches the separator vessel. Sufficient hydrostatic head is maintained to suppress boiling inside the reboiler. When the

recirculating liquor reaches the separator vessel, flash evaporation occurs due to the reduced pressure in the vessel. The vapor flows through a series of separation trays and a removable demister pad section which are internal parts of the separator vessel. The vapor then flows to the primary condenser where the majority of the vapor is condensed. The noncondensables and a small amount of moisture are vented to the ejector/condenser vacuum system. The secondary condenser system consists of primary ejector, secondary ejector, inter-condenser, and after-condenser. The humid noncondensables from the primary condenser flow to the suction side of the primary ejector which discharges to the inter-condenser. The vent from the inter-condenser flows to the suction side of the secondary ejector which discharges into the after-condenser. The vent from the after-condenser flows to the facility vessel vent system. The secondary condenser system is designed to achieve a pressure of 1.0 to 1.3 psia in the separator vessel during normal operating conditions. The operating pressure is automatically controlled by an air in-bleed into the suction line of the primary ejector. This operating pressure lowers the boiling point of the liquor to approximately 122 °F which reduces potential corrosion of the evaporator by chlorides. Condensate from the condensers flows by gravity to the condensate vessel. Some of the condensate is drawn off and used to wash the demister pads in the separator vessel. Because of the foaming tendencies of evaporator feed chemistry, when foaming is anticipated in the separator vessel, antifoam will be continuously added.

3.3 Performance

3.3.1 All three (3) evaporator systems shall be capable of continuous operation while achieving a feed evaporation rate ranging from 10 to 30 gpm. The design feed evaporator rate shall exclude all water/fluid addition to demister pads spray, separation trays, and antifoam injection.

3.3.2 Each evaporator system shall operate independently.

3.3.3 Each evaporator system shall have the ability to be placed on "total reflux" mode.

3.3.4 A minimum decontamination factor of 8.0E+06 shall be achieved as defined in section 7.2.1, function test requirements, with consideration to achieving the evaporator stream operating conditions described in subsection 3.4 and the ALARA general design condition in subsection 3.1.

3.3.5 Evaporator system operating parameters shall minimize reboiler fouling by using low differential temperature and high tube velocity to the extent practical in the design.

3.3.6 The FEP evaporator systems shall produce waste concentration of 5 to 6M sodium (1.23 to 1.50 SG).

3.3.7 The TLP evaporator system shall produce waste concentration of 8 to 10M sodium (1.33 to 1.57 SG).

3.3.8 All evaporator system components within the R5/C5 black cell (except the demister pads) shall be nonreplaceable components with a design life of 40 years. Reboilers and recirculation pumps in the R5/C5 hot cell shall be remotely replaceable.

3.4 Design Conditions

3.4.1 General

3.4.1.1 For nominal conditions refer to Appendix A and Appendix B for the FEP evaporator and TLP evaporator stream data, respectively. The data defines the system performance operating conditions and requirements. For predicted maximum radionuclides, refer to Appendix C.

3.4.1.2 All equipment skids shall meet applicable Department of Transportation (DOT) requirements for road transportation per 49 CFR 173.

3.4.2 Physical Constraints/Interfaces

3.4.2.1 The FEP evaporator separator vessels (FEP-SEP-00001A/B) with demister pads shall be located in the R5/C5 black cell, room P-0106 on the 0-ft floor elevation. The TLP evaporator separator vessel (TLP-SEP-00001) shall be located in the R5/C5 black cell, room P-0117 on the 0-ft floor elevation. Demister pad assemblies shall be accessed through a sealed, shielded aperture in the 56 ft floor (10-ft diameter maximum). Refer to Appendices I and J for their locations and layout.

3.4.2.2 All Reboiler and support frame assemblies and recirculation pumps shall be located in the R5/C5 hot cell, room P-0123 on the 0-ft floor elevation. Each reboiler and support frame assemblies shall not weigh more than 27.5 tons including all lifting fixtures and lifting beams. The available space for each reboiler (excluding nozzles) has dimensions of 6 ft diameter by 15 ft high. All equipment assembly must fit through a 13 ft by 13 ft air lock door and shall not exceed 21 ft length. Assume air lock transportation cart is 3 ft high. The space envelope limitation of 6 feet diameter shall be used for mounting of remote connectors and seal flush reservoir on the recirculation pump assembly. Refer to Appendix P for location of reboiler and recirculation pump.

3.4.2.3 FEP evaporator primary condensers (FEP-COND-00001A/B) and secondary condenser system (FEP-COND-00002A/B, -00003A/B, and FEP-EJCTR-00040, -00041, -00042, -00043) shall be designed to fit in room P-0304 on the 56-ft floor elevation. TLP evaporator primary condenser (TLP-COND-00001) and secondary condenser system (TLP-COND-00002, -00003, and TLP-EJCTR-00064, -00067) shall be designed to fit in room P-0311 on the 56-ft floor elevation. Refer to Appendices I and J for locations and layout.

3.4.2.4 FEP evaporator condensate vessel and pump system (FEP-VSL-00005 and FEP-PMP-00006A/B) shall be designed to fit in room P-0105B (R2/C3) on the 0-ft floor elevation. TLP evaporator

condensate vessel and pump system (TLP-VSL-00002 and TLP-PMP-00002A/B) shall be designed to fit in room P-0118 (R2/C3) on the 0-ft floor elevation. Refer to Appendices I and J for locations and layout.

3.4.2.5 Antifoam vessel and pump system (AFR-TK-00001 and AFR-PMP-00006, -00007, -00008) shall be designed to fit in room P-0429 on the 77-ft floor elevation (R2/C2). Refer to Appendix K for locations and layout.

3.4.3 Buyer Supplied Utilities

Values for all utility supply pressures and temperatures are nominal values.

3.4.3.1 Plant service air and instrument air will be supplied at approximately 100 psig and 65 °F.

3.4.3.2 **Deleted**

3.4.3.3 **High pressure steam supply conditions:**

3.4.3.3.1 Minimum operating condition: 110 psig @ 344°F

3.4.3.3.2 Normal operating condition: 118 psig @ 349°F

3.4.3.3.3 Maximum operating condition: 135 psig @ 358°F

3.4.3.3.4 Design condition: 163 psig @ 372°F

3.4.3.4 Cooling water will be supplied at approximately 45 psig and 75 °F with a peak summer maximum of 83 °F. The cooling water temperature of 75 °F is valid for 85 % of the time through a year.

3.4.3.5 Demineralized water will be supplied at approximately 72.5 psig and 75 °F for demister pad and separation tray spray in the event that sufficient process condensate is unavailable.

3.4.3.6 Water, 5 M nitric acid at approximately 75 psig and 77 °F, or 50 % wt caustic at approximately 75 psig and 77 °F can be supplied for the Seller's flushing system.

3.5 Environmental Conditions

Environmental qualification is not applicable per Buyer's equipment qualification design guide.

3.5.1 Storage

Prior to installation, the evaporator systems may be stored outdoors at ambient temperature extremes ranging from –30 °F dry-bulb to 117 °F dry-bulb and with a relative humidity of 0-100 %.

3.5.2 Evaporator Separator Vessels

The separator vessels (FEP-SEP-00001A/B and TLP-SEP-00001) will be installed indoors in an R5/C5 black cell maintained between 59 to 113 °F dry-bulb temperature during normal operation. Radiation exposure for the FEP separator vessels (FEP-SEP-00001A/B) will be 1,000 – 1,800 Rad/hr. Radiation exposure for the TLP separator vessel (TLP-SEP-00001) will be 0.5 Rad/hr.

3.5.3 Reboilers and Recirculation Pumps

The reboilers (FEP-RBLR-00001A/B and TLP-RBLR-00001) and recirculation pumps (FEP-PMP-00009A/B and TLP-PMP-00001) will be installed indoors in an R5/C5 hot cell maintained between 59 to 113 °F dry-bulb temperature during normal operation. Radiation exposure will be 1,000 Rad/hr.

3.5.4 Primary and secondary condensers

The FEP primary condensers (FEP-COND-00001A/B) and FEP secondary condensers (FEP-COND-00002A/B, -00003A/B, and FEP-EJCTR-00040, -00041, -00042, -00043) will be installed indoors in an R5/R3/C3 area maintained between 59 to 113 °F dry-bulb temperature during normal operation. The TLP primary condenser (TLP-COND-00001) and TLP secondary condensers (TLP-COND-00002, -0003, and TLP-EJCTR-00064, -00067) will be installed indoors in an R3/C3 area maintained between 59 to 113 °F dry-bulb temperature. Radiation exposure will be 10 mRad/hr during normal operation.

3.5.5 Condensate Vessels, Antifoam Vessel, Condensate Pumps, Antifoam Pumps, FEP Feed Pumps, FEP Concentrate pumps, and FEP/TLP Reboiler Steam Condensate Transfer Stations

The condensate vessels (FEP-VSL-00005 and TLP-VSL-00002), condensate pumps (FEP-PMP-00006A/B and TLP-PMP-00002A/B), and FEP/TLP reboiler steam condensate transfer stations (FEP-VSL-00021, FEP-PMP-00010A/B, FEP-VSL-00022, FEP-PMP-00011A/B, TLP-VSL-00047, TLP-PMP-00012A/B) will be installed indoors in an R2/C3 area. The antifoam vessel (AFR-TK-00001) and antifoam pumps (AFR-PMP-00006, -00007, and -00008) will be installed indoors in an R2/C2 area. The R2/C3 and R2/C2 areas are maintained between 59 to 113 °F dry-bulb temperature during normal operation. Radiation exposure will be 0.5 mRad/hr.

3.6 Feed Pumps

3.6.1 For feed pump requirements, refer to individual MDS in section 2 of the MR and equipment sketches in Appendices I and J of this specification.

3.6.2 Two TLP feed pumps (TLP-PMP-00005A/B) shall be supplied by the Seller in accordance with Buyer's specification *24590-WTP-3PS-MPC0-T0002, Engineering Specification for General Centrifugal Pumps to Meet Requirements of ASME B73.1M-1991 and ASME B73.2M-1991 for Commercial (CM) Components.*

3.6.3 The TLP feed pumps shall be centrifugal type. Each pump shall be provided with a pump motor mounted on a common base plate for contact maintenance. The pumps are plumbed together for operational flexibility. Seal flush plan to API 7353.

3.6.4 Each TLP feed pump shall be provided with an adjustable speed drive (ASD). The ASD shall be compliant with specification *24590-WTP-3PS-EVV1-T0001, Engineering Specification for Low Voltage Adjustable Speed Drives* and specification *24590-WTP-3PS-MUMI-T0002, Engineering Specification for Low Voltage Induction Motors.*

3.6.5 LAW SBS Condensate feed pumps (TLP-PMP-00005A/B) for the TLP evaporator system shall be supplied by the Seller. These pumps shall be designed for contact maintenance and designed for the following operating conditions. All fluid properties are referenced at 77 °F.

- 10 to 38 gpm
- 1.0 to 16.3 cP
- 1.0 to 1.41 SG
- 68 to 167 °F
- less than 3 wt % feed solids.

3.6.6 For FEP feed pumps (FEP-PMP-00007A/B), the sections for liquid property and operating conditions on the Mechanical Data Sheets (section 2 of the MR) shall be specified by the Seller. The Buyer will procure pumps which meet these criteria unless otherwise directed by the Seller as described in section 1.2.16. The following operating conditions shall apply. All fluid properties are referenced at 77 °F.

- 20 to 50 gpm
- 4.2 to 12 cP
- 1.0 to 1.29 SG
- 59 to 122 °F
- 0 to 10 wt % suspended solids

3.6.7 Treated LAW Collection vessel feed pump (CXP-PMP-00002A/B) for the Treated LAW evaporator system will be specified and provided by the Buyer for the following operating conditions. All fluid properties are referenced at 77 °F.

- 22 to 34 gpm
- 0.6 to 5.0 cP
- 1.0 to 1.26 SG
- 59 to 113 °F
- 0 wt % suspended solids

3.6.8 The feed pump flow rate shall be controlled by the separator vessel liquid level.

3.6.9 All waste feeds shall be transferred by the feed pump into the recirculation line on the suction side of the recirculation pump.

3.6.10 Deleted

3.7 Recirculation Pumps

3.7.1 For recirculation pump requirements, refer to individual MDS in section 2 of the MR and equipment sketches in Appendices I and J of this specification.

3.7.2 The recirculation pumps shall be axial-flow type mounted vertically in an elbow of the recirculation loop. Structural support requirements for the recirculation pump shall be provided by the Seller with provision to transfer loads from the pump to the structural base rather than the pump nozzles or pump shaft/impeller.

3.7.3 Each recirculation pump shall be provided with a pump motor and an adjustable speed drive (ASD). Motors shall be provided with radiation resistant insulation, rated for 10^9 TID rad (gamma). The ASD shall be compliant with specification *24590-WTP-3PS-EVV1-T0001, Engineering Specification for Low Voltage Adjustable Speed Drives* and specification *24590-WTP-3PS-MUMI-T0002, Engineering Specification for Low Voltage Induction Motors.*

3.7.4 The recirculating pumps shall have dual mechanical seals that will be lubricated/flushed with water. Flush piping will be based on API Plan 53. Seller shall coordinate with Buyer for details.

3.7.5 Inlet and outlet pipe ends of the recirculation pumps shall be prepared for butt welding.

3.7.6 Seller shall comply with API 610 nozzle loading requirements .

3.7.7 The recirculation pump nozzle locations shall be within (±) 1/4 inch tolerance. However, the tolerance measurement device shall have a minimum of 1/1000 inch accuracy.

3.7.8 The recirculation pump remote flange mating surface shall be approximately at 12 ft-11 inches plant elevation. The pump and motor withdrawal length shall not be greater than 6 ft-1 inch. The dowel pins shall be 2 in diameter with the master being 1 ft-3 3/4 inches and the secondary being 1ft-3/4 inch. The bolts shall be 1-1/4 inch ACME studs with 2 inches nuts.

3.7.9 The recirculation pumps shall be designed with the following features to ensure ease of process operating with a long expected mechanical lifetime:

- Low operating speed, high flow, and low head process conditions.
- Low casing fluid velocity to minimize wear on the casing.
- Top mounted motor and vertical removal design for easy crane access.
- The recirculation pump motor, impeller, shafting, and seals shall be remotely removable as one unit by using a single crane hook and crane mounted impact wrench with CCTV cameras.

3.7.10 FEP recirculation pumps (FEP-PMP-00009A/B) shall be designed for the following operating conditions. All fluid properties are referenced at 77 °F.

- 11,000 gpm
- 5.5 to 12 cP
- 1.23 to 1.50 SG
- 59 to 140 °F
- 1 to 20 wt % suspended solids

3.7.11 TLP recirculation pump (TLP-PMP-00001) shall be designed for the following operating conditions. All fluid properties are referenced at 77 °F.

- 11,000 gpm
- 0.68 to 30 cP
- 1.33 to 1.57 SG
- 77 to 145 °F
- less than 4 wt % suspended solids

3.8 Concentrate Pumps

3.8.1 For concentrate pump requirements, refer to individual MDS in section 2 of the MR and equipment sketches in Appendices I and J of this specification.

3.8.2 Two TLP concentrate pumps (TLP-PMP-00011A/B) shall be supplied by the Seller in accordance with Buyer's specification *24590-WTP-3PS-MPC0-T0002, Engineering Specification for General Centrifugal Pumps to Meet Requirements of ASME B73.1M-1991 and ASME B73.2M-1991 for Commercial (CM) Components.*

3.8.3 Deleted

3.8.4 The TLP concentrate pumps shall be centrifugal type. Each pump shall be provided with a pump motor mounted on a common base plate for contact maintenance. The pumps are plumbed together for operational flexibility. Seal flush plan to API 7353.

3.8.5 Each TLP concentrate pump shall be provided with an adjustable speed drive (ASD). The ASD shall be compliant with specification *24590-WTP-3PS-EVV1-T0001, Engineering Specification for LAW Voltage Adjustable Speed Drives* and specification *24590-WTP-3PS-MUMI-T0002, Engineering Specification for Low Voltage Induction Motors.*

3.8.6 The concentrate pump flow rate shall be controlled by the specific gravity of the waste concentrate in the evaporator separator vessel.

3.8.7 For FEP concentrate pumps (FEP-PMP-00008A/B), the sections for liquid property and operating conditions on the Mechanical Data Sheets (section 2 of the MR) shall be specified by the Seller. The Buyer will procure pumps which meet these criteria unless otherwise directed by the Seller as described in section

1.2.16. The following operating conditions shall apply. All fluid properties are referenced at 77 °F.

- 3 to 34 gpm
- 5.5 to 12 cP
- 1.23 to 1.50 SG
- 59 to 140 °F
- 1 to 20 wt % suspended solids

3.8.8 The TLP concentrate pumps (TLP-PMP-00011A/B) shall be supplied by the Seller. The pumps shall be designed for contact maintenance and designed for the following operating conditions. All fluid properties are referenced at 77 °F.

- 5 to 14 gpm
- 0.68 to 30 cP
- 1.4 to 1.57 SG
- 68 to 145 °F
- less than 4 wt % suspended solids

3.9 Reboilers

3.9.1 For reboiler requirements, refer to individual MDS in section 2 of the MR and equipment sketches in Appendices I and J of this specification.

3.9.2 The reboilers shall be designed in accordance with Buyer's specification 24590-WTP-3PS-MES0-T0001, *Specification for Shell and Tube Heat Exchangers*. **Seller shall comply with nozzle loading requirements specified in Appendix V of this specification.**

3.9.3 The reboilers (FEP-RBLR-00001A/B and TLP-RBLR-00001) shall be of all welded construction on both tube and shell sides.

3.9.4 Reboiler tubes shall be seamless and welded to the tubesheet(s) with full strength welds. The tubes shall include a corrosion allowance of 0.04 inch for the process side.

3.9.5 The reboilers shall be capable of sustaining a water evaporation rate of 10 to 30 gpm based on a final SG of 1.50 for the FEP evaporator systems and 1.57 for the TLP evaporator system.

3.9.6 Reboiler process fluid velocity shall be greater than 4.0 ft/sec for solid suspension and not exceed 10 ft/sec velocities for minimal erosion effects.

3.9.7 The reboiler and support frame assemblies shall be designed for remote installation and replacement as one unit.

3.9.8 The reboiler and support frame assemblies shall be designed for horizontal transportation as one unit within the hot cell but for vertical installation with integral tailing features.

3.9.9 The maximum dimensions for a reboiler shall be 6 ft diameter and 15 ft height. The reboiler design shall be either multi-pass or U-tube heat exchanger with side bottom process fluid inlet and outlet.

3.9.10 The reboiler process fluid inlet and outlet nozzles shall be sized not greater than 24 inch diameter. Inlet and outlet pipe ends of the reboiler shall be prepared for butt welding.

3.9.11 Seller shall supply as-built dimensions for the nozzle locations upon completion of fabrication. Measurements shall be taken to the nearest 0.001 inch measuring equipment accuracy shall be within ± 0.006 inch.

3.9.12 Deleted

3.9.13 Pressure steam will be provided by Buyer. The Seller is responsible for providing steam conditioning skids. Each skid will include a pressure reducing valve and control and a desuperheater to produce Seller's specified saturated pressure steam for reboiler operation.

3.9.14 Seller shall provide specifications for steam condensate removal system. The steam condensate will travel from the reboiler through approximately 100 lateral feet and 2 vertical feet of pipe to the steam condensate vessel.

3.9.15 The reboiler shall be designed such that the static pressure of the process fluid above the reboiler is sufficient to suppress the boiling in the reboiler tubes. Boiling shall occur only near or at the liquid surface in the evaporator separator vessel.

3.9.16 The temperature rise of the process fluid as it passes through the reboiler shall be approximately 2 – 4 °F design basis to minimize the potential for tube fouling.

3.9.17 Reboiler will be installed without insulation. Reboiler duty and steam demand calculations shall include heat loss from all reboiler surfaces without insulation.

3.10 Evaporator Separator Vessels

3.10.1 For separator vessel requirements, refer to individual MDS in section 2 of the MR and equipment sketches in Appendices I and J of this specification.

3.10.2 The separator vessels shall be designed in accordance with Buyer's specification 24590-WTP-3PS-MV00-T0001, *Specification for Pressure Vessel Design and Fabrication*. **Seller shall comply with nozzle loading requirements specified in Appendix V of this specification.**

3.10.3 The separator vessels shall be designed to maximize liquid – vapor separation and to achieve a 30 gpm feed evaporation rate.

3.10.4 The separator vessels shall incorporate nozzle connections for temperature (including thermowells), pressure, level, and density instrumentation as required. The Seller shall propose reliable measurement instrumentation for Buyer to review.

3.10.5 Deleted.

3.10.6 The top section of the separator vessel shall incorporate lateral guides to the 56 ft floor to minimize horizontal forces and base overturning moments during a seismic event.

3.10.7 The centerline elevation of the separator vessel offgas nozzles shall be no higher than 47 ft-0 inch plant elevation.

3.10.8 The separator vessel heads shall be removable for access to the demister pads section, which contains two layers of 12 inch thick Inconel 625 fine mesh.

3.10.9 The separator vessel shall incorporate a 2 inch inlet nozzle to supply sufficient dilution air to negate hydrogen buildup.

3.10.10 The separator vessel shall incorporate a series of three internal separation trays and an internal two-layer demister pads section to deentrain the steam droplets and remove solids from the vapor.

3.10.11 Spray nozzles shall be provided to allow nitric acid cleaning of the demister mesh and separation trays. The placement of spray nozzles shall accommodate demister section removal and not hinder maintenance operations.

3.10.12 A spray pipe with nozzles located below the lower demister pad shall be provided to spray demin water or recycled condensate into the steam flow to assist in mesh performance.

3.10.13 To improve demister efficiency and facilitate decontamination, the demister pads shall be sprayed from above and below with recycled condensate or 5 M nitric acid from a spray control system located at the 56 ft elevation. Sections of the demister pads shall be able to be sprayed either individually or collectively.

3.10.14 Differential pressure across a series of separation trays and the demisters pad section shall not significantly elevate boiling point.

3.10.15 All nozzle connection points shall be provided clear and below any surrounding floor structural steel at 56 ft plant elevation.

3.10.16 The antifoam nozzles of the evaporator separator vessel shall be located above the uppermost liquid level.

3.11 Primary Condensers

3.11.1 For primary condenser requirements, refer to individual MDS in section 2 of the MR and equipment sketches in Appendices I and J of this specification

3.11.2 Primary condensers shall be designed in accordance with Buyer's specification 24590-WTP-3PS-MES0-T0001, *Specification for Shell and Tube Heat Exchangers*.

3.11.3 The primary condensers (FEP-COND-00001A/B and TLP-COND-00001) shall be of all welded construction on the process fluid side. Tubes shall be welded to the tubesheets(s) with full strength welds.

3.11.4 Seller shall comply with nozzle loading requirements specified in **Appendix V of this specification.**

3.11.5 Condensers shall be designed with hinged bonnets to allow isolation of leaking tubes utilizing contact maintenance techniques.

3.11.6 Condensers shall be designed for retubing as part of the maintenance strategy.

3.11.7 Condensers shall be designed to maximize vapor condensation from the offgas streams at a nominal rate of 30 gpm.

3.11.8 Average cooling water temperature rise of 18 °F shall be used for condenser design.

3.11.9 Cooling water (tube side) pressure must exceed the process vapor (shell side) pressure.

3.11.10 The primary condensers shall be compatible with process condensate that has a pH of 7 to10, a temperature of 122 °F, and a 0 to 300 ppm ammonium ion concentration. They shall also be compatible with 5M nitric acid used for separator vessel decontamination.

3.11.11 Primary condenser will be installed without insulation. Primary condenser duty and cooling water demand calculations shall include heat loss from all primary condenser surfaces without insulation.

3.12 Secondary Condenser System

3.12.1 The secondary condenser system shall consist of inter-condenser, after-condenser, and two steam ejectors. For secondary condenser system requirements, refer to individual MDS in section 2 of the MR and equipment sketches in Appendices I and J of this specification.

3.12.2 Inter-condensers and after-condensers shall be designed in accordance with Buyer's specification 24590-WTP-3PS-MES0-T0001, *Specification for Shell and Tube Heat Exchangers*.

3.12.3 Seller shall comply with nozzle loading requirements specified in **Appendix V of this specification.**

3.12.4 Inter-condensers and after-condensers shall be of all welded construction on the process fluid side. Tubes shall be welded to the tubesheets(s) with full strength welds.

3.12.5 The boiling point elevation range of the evaporator concentrate for the FEP evaporator system is approximately 11 to 18 °F and for TLP evaporator system is approximately 17 to 24 °F.

3.12.6 The evaporator separator vessel pressure shall be maintained by a two-stage vacuum ejector system. The first stage shall maintain a vacuum on the primary condenser and consists of a steam ejector, air in-bleed control valve, and an inter-condenser. The vapor discharged from the inter-condenser enters the second stage of the vacuum system. The second stage shall consist of a second steam ejector and an after-condenser.

3.12.7 The secondary condenser systems shall provide capability for operating at a vacuum as low as practicably achievable.

3.12.8 The two-stage vacuum ejector system shall be designed to control the separator vessel pressures at between 1.0 and 1.3 psia.

3.12.9 The desired vacuum within the separator vessel shall be obtained by automatically controlling the air in-bleed into the suction side of the first-stage vacuum ejectors.

3.12.10 Process condensate from each condenser shall be individually routed to the process condensate vessel.

3.12.11 All components of secondary condenser skid will be installed without insulation. The duty, cooling water demand, and steam demand calculations shall include heat loss from all surfaces without insulation.

3.12.12 Cooling water pressure must exceed the process vapor pressure.

3.13 Evaporator Process Condensate Vessels & Pumps

3.13.1 For process condensate vessel and pump requirements, refer to individual MDS in section 2 of the MR and equipment sketches in Appendices I and J of this specification

3.13.2 The evaporator process condensate vessels shall be designed in accordance with Buyer's specification 24590-WTP-3PS-MV00-T0001, *Specification for Pressure Vessel Design and Fabrication.*

3.13.3 Seller shall comply with nozzle loading requirements for vessels specified in Buyer's specification 24590-WTP-3PS-MV00-T0001, *Specification for Pressure Vessel Design and Fabrication.*

3.13.4 The FEP evaporator process condensate vessel (FEP-VSL-00005) shall be designed for an operating volume of 4144 gallons (911-gallon batch).

3.13.5 The support frame shall be made such that the overflow nozzle centerline for the FEP evaporator process condensate vessel shall be at or above 15 ft-5 3/8 inches plant elevation.

3.13.6 The TLP evaporator process condensate vessel (TLP-VSL-00002) shall be designed for an operating volume of 2304 gallons (375-gallon batch).

3.13.7 The support frame shall be made such that the overflow nozzle centerline for the TLP evaporator process condensate vessel shall be at or above 17 ft-5 7/8 inches in plant elevation.

3.13.8 The evaporator process condensate vessels shall be equipped with interior wash rings to facilitate decontamination per standard drawing 24590-WTP-MV-M59T-00011.

3.13.9 Evaporator process condensate vessels and pumps shall be designed for contact maintenance.

3.13.10 Process condensate pumps shall be in accordance with Buyer's specification 24590-WTP-3PS-MPC0-T0002, *Engineering Specification for General Centrifugal Pumps to Meet Requirements of ASME B73.1M-1991 and ASME B73.2M-1991 for Commercial (CM) Components.*

3.13.11 Each process condensate pump shall be provided with an adjustable speed drive (ASD). The ASD shall be compliant with specification *24590-WTP-3PS-EVV1-T0001, Engineering Specification for Low Voltage Adjustable Speed Drives* and specification *24590-WTP-3PS-MUMI-T0002, Engineering Specification for Low Voltage Induction Motors.*

3.13.12 The process condensate pumps (FEP-PMP-00006A/B and TLP-MPM-00002A/B) shall be centrifugal type. Each pump shall be provided with a pump motor mounted on a common base plate for contact maintenance. The pumps are plumbed together for operational flexibility.

3.13.13 The FEP evaporator process condensate pumps (FEP-PMP-00006A/B) shall be designed for the maximum feed evaporation rate of 60 gpm (30 gpm per FEP evaporator) and maximum steam ejector demands. The TLP Evaporator condensate pumps (TLP-PMP-00002A/B) shall be designed for the maximum feed evaporation rate of 30 gpm and maximum steam ejector demands.

3.13.14 The process condensate vessels and pumps shall be compatible with process condensate that has a pH of 7 to10, a temperature of 68 to 145 °F, and a 0 to 300 ppm ammonium ion concentration. They shall also be compatible with 5M nitric acid used for separator vessel decontamination.

3.13.15 The process condensate pumps shall have the ability to supply adequate condensate to the separation trays and demister pad sprays in the separator vessels.

3.13.16 Single mechanical seals shall be incorporated in each process condensate pump in accordance with American Petroleum Institute (API) Plan 11.

3.13.17 The process condensate pumps shall be designed to comply with pump nozzle loading requirements specified in API 610.

3.14 Antifoam Skid and FEP/TLP Reboiler Condensate Transfer Stations

3.14.1 For antifoam vessel and pump requirements, refer to individual MDS in section 2 of the MR and equipment sketches in Appendix K of this specification.

3.14.2 The antifoam vessel and reboiler condensate vessels shall be designed in accordance with Specification 24590-WTP-3PS-MV00-T0001, *Specification for Pressure Vessel Design and Fabrication*.

3.14.3 Seller shall comply with nozzle loading requirements specified Buyer's specification 24590-WTP-3PS-MV00-T0001, *Specification for Pressure Vessel Design and Fabrication*.

3.14.4 One (1) antifoam system composed of a vessel (AFR-TK-00001) with three metering pumps (AFR-PMP-00006, -00007, -00008) shall supply antifoam reagent to both FEP and TLP evaporator systems.

3.14.5 The antifoam vessel (AFR-TK-00001) shall be designed for a maximum operating volume of 1500 gallons.

3.14.6 Deleted.

3.14.7 Each antifoam vessel shall be equipped with the following:

- Reagent inlet nozzle
- Demineralized water inlet nozzle
- Level instrumentation nozzle
- Agitator to provide homogeneous antifoam solutions

3.14.8 The antifoam pumps shall be positive displacement metering types. The metering pump design shall include an internal relief valve or an internal bypass valve that automatically stops the pumping action when the line pressure gets above a setpoint.

3.14.9 Antifoam vessels and pumps shall be designed for contact maintenance.

3.14.10 Seller shall supply three (3) identical transfer stations, which collect steam condensate drained from the reboilers.

3.14.11 The transfer stations shall be designed to support continuous steady state operation in maintaining nominal operating level while receiving and supplying steam condensate to steam conditioning desuperheater and to a general condensate receiver.

3.14.12 The condensate transfer vessel design and configuration shall support installation of pressure-differential level instrumentation and associated flanged "direct connect diaphragm seal pressure transmitters.

3.14.13 The condensate transfer vessel shall be a vertical oriented vessel constructed of 304L stainless steel with a capacity of 225 gallons.

3.14.14 Each condensate transfer vessel shall be designed to be attached to a mounting ring which will be installed using anchor bolts.

3.14.15 The condensate transfer vessel shall be designed to support a minimum operating volume of 80 gallons.

3.14.16 The condensate transfer pumps shall be vertical turbine pumps with a by-pass valve to limit the pump discharge pressure preventing the motor to become overloaded. The pumps along with their motors shall be mounted on the transfer stations.

3.14.17 Single mechanical seals shall be incorporated in each condensate transfer pump in accordance with American Petroleum Institute (API) Plan 11.

3.14.18 The condensate transfer pumps shall be designed to comply with pump nozzle loading requirements specified in API 610.

3.14.19 The condensate transfer pumps and accessories shall be made of 300 series stainless steel. The pump materials of construction for wetted arts shall be cast high alloy steel 316 SS.

3.14.20 A 2-inch nozzle on the side of each reboiler steam condensate vessel shall be provided for an additional condensate drain from the reboiler steam conditioning system desuperheater to function. Location of the 2-inch inlet drain nozzle is provided in Appendix L.

3.15 Mechanical Handling Requirements

3.15.1 Equipment located in the R5/C5 hot cell shall be designed in accordance with Buyer's specification 24590-WTP-3PS-M000-T0002, *General Specification for Mechanical Handling Equipment Design & Manufacture.*

3.15.2 Seller designed equipment shall incorporate jumper connector nozzles to facilitate process, utility, instrument, and power connections to the Buyer supplied jumpers and systems.

3.15.3 Equipment skids shall incorporate jumper nozzles for process pipework (e.g., pump suction and discharge connections, utilities, instrumentation, and power, as required).

3.15.4 Seller shall identify all interface points for systems requiring connection to the Buyer's process piping, jumpers, and utility systems.

3.15.5 The nozzle tolerance requirements for reboiler and recirculation pumps in the R5/C5 hot cell shall be ±1/4 inch. The nozzle tolerance measurement device shall have a minimum of ±1/1000 inch accuracy. Jumpers shall be built to as-built dimensions and replaced with equipment as necessary.

3.15.6 Deleted

3.15.7 Deleted

3.16 Loadings

3.16.1 The evaporator equipment assemblies shall be self-supporting, capable of carrying the static loads of components, and capable of handling stresses imposed during shipment, installation, operation and an earthquake.

3.16.2 Loads to be considered for the structural design of evaporator vessel, equipment, and components shall be in accordance with applicable codes, standards, and reference documents listed in section 2 of this specification.

3.16.3 All vessels or equipment with SC-I and SC-II designation shall be seismically analyzed and qualified in accordance with AISC N690 **and requirements specified in the Appendix V**.

3.16.4 All vessels or equipment with SC-III and SC-IV designation shall be seismically analyzed and qualified in accordance with the AISC ASD and UBC zone 2B.

3.16.5 Seller shall complete a seismic analysis of the evaporator package designs, including skids, and skid anchorage, equipment and pressure vessel anchorage, piping anchorage. Loadings shall be calculated in accordance with the appropriate requirements of Buyer's specifications 24590-WTP-3PS-SS90-T0001, Engineering Specification for Seismic Qualification of Seismic Category I/II Equipment and Tanks, and 24590-WTP-3PS-FB01-T0001, Structural Design Loads for Seismic Category III & IV Equipment and Tanks. Analysis shall show that the evaporator system and components are capable of withstanding seismic loadings.

3.16.6 All vessels, heat exchangers, and any other pressure containing vessels or equipment shall be seismically analyzed and qualified by the Seller per Buyer's specification 24590-WTP-3PS-MV00-T0002, *Engineering Specification for Seismic Qualification Criteria for Pressure Vessels,* Buyer's specification 24590-WTP-3PS-MV00-T0001, *Specification for Pressure Vessel Design and Fabrication.*

3.16.7 The Seller shall perform thermal and static stress analyses for all evaporator structures, systems, and components.

3.16.8 Except for reboiler and recirculation pump skids, all equipment skids shall be designed for a maximum floor loading of 160 lbs/ft^2. Refer to drawings 24590-PTF-DD-S13T-00022, 24590-PTF-DD-S13T-00025, 24590-PTF-DD-S13T-00028, 24590-PTF-DD-S13T-00027, 24590-PTF-DD-S13T-00036, 24590-PTF-DD-S13T-00042, 24590-PTF-DD-S13T-00043, and 24590-PTF-DD-S13T-00044 for structural concrete embed details.

3.16.9 The embed location for reboilers are detailed on drawings 24590-PTF-DD-S13T-00025, 24590-PTF-DD-S13T-00027, 24590-PTF-DD-S13T-00028, AND 24590-PTF-DD-S13T-00049. Each embed has a support post which connects to the PEP. To avoid displacement in skid under the heavy reboiler weight, reboiler frame shall rest upon support posts with the embeds underneath. These embeds are type "D" which have been designed for ultimate compressive strength of 100 kips.

The flow meter unit of the steam conditioning skids for the FEP and TLP evaporator systems are SC-III items and may not be qualified at the accelerations defined in the Buyer's specification for Seismic Qualification of Seismic Category I/II Equipment and Tanks, and 24590-WTP-3PS-FB01-T0001. Equivalent test can be performed and considered successful if there is no physical damage to the instrument. For the equivalent test, the flow meter units will undergo a frequency sweep (0 to 500 Hz) to determine their resonant frequency. Once the resonant frequency is determined, the units are tested at 1 g vertical and then 1 g horizontal for a period of twenty minutes each, all while being excited at the resonant frequency.

3.17 Electrical Requirements

3.17.1 The electric motor drive shall conform to the requirements set forth in Buyer's specification 24590-WTP-3PS-EVV1-T0001, *Engineering Specification for Low Voltage Adjustable Speed Drives*.

3.17.2 The pump motor and all other motors in this evaporator package shall conform to the requirements set forth in Buyer's specification 24590-WTP-3PS-MUMI-T0002, *Engineering Specification for Low Voltage Induction Motors*.

3.17.3 Seller shall comply with the requirements set forth in Buyer's specification 24590-WTP-3PS-EKP0-T0001, *Engineering Specification for Electrical Requirements for Packaged Equipment.*

3.18 Instrumentation and Control Requirements

3.18.1 General

3.18.1.1 All controls, control systems, control panels, alarm systems, analyzers, instrumentation, and their installation into the evaporator system shall conform to the requirements set forth in Buyer's specification 24590-WTP-3PS-JQ07-T0001, *Engineering Specification for Instrumentation for Package Systems*.

3.18.1.2 The Seller shall provide instrument data sheets and installation details. The Buyer will use this information for procurement and installation of required instrumentation.

3.18.1.3 The Seller shall provide functional test set points and recommended operating set points with the packaged systems.

3.18.1.4 The Seller shall supply the control requirements, which shall consist of the control loop definitions, system interlocks, alarms, and control philosophy.

3.18.1.5 The Buyer will use the Seller's control requirements to provide the software requirement specification for logic programming and DCS hardware, which will integrate the Seller's control requirements into the Buyer's overall control system.

3.18.1.6 Seller shall comply with NQA-1 1989, 11S-2, for computer program testing.

3.18.1.7 The following table describes the work processes and the division of the responsibilities:

	Buyer's Responsibility	Seller's Responsibility
Blank Instrument Data Sheet	•	
Complete Instrument Data Sheet		•
Instrument Installation Details		•
Instrumentation Procurement	•	
Instrumentation Installation	•	
Functional Test Set Points		•
Operating Set Points		•
Control Requirements		•
Software Requirements Specification	•	
Logic Programming	•	
DCS Hardware	•	

3.18.2 Other

The Seller shall select level, specific gravity, temperature, and pressure instrumentation that shall provide accuracy of the measured range as specified in Buyer's specification 24590-WTP-3PS-JQ07-T0001, *Engineering Specification for Instrumentation for Package Systems*.

3.19 Lifting Requirements

3.19.1 Seller shall identify the weight and center of gravity of each equipment skid.

3.19.2 Seller shall provide yokes for separator vessels, reboiler and support assemblies, and recirculation pumps for installation and remote maintenance. Each part will be made of 304SS. The yokes shall be designed for balanced lifting and handling by a single hook crane. The yokes shall be designed in accordance with ANSI N14.6 and Buyer's specification 24590-WTP-3PS-MJJ0-T0001, *Specification for Lifting Beams for Mechanical Handling Equipment*.

3.19.3 All evaporator equipment and skids shall have lift points and attachment mechanism. Lifting bail design shall comply with proposal hook design shown in Appendix G.

3.19.4 All lifting attachments shall have either a safety factor of three (3), based on the material yield strength, or five (5), based on the material ultimate strength, whichever is more conservative. The lifting points shall have a label clearly identifying its safe working load. If forged bolts are used, they shall be used in accordance with ASME B18.15.

3.19.5 The reboiler and support assemblies shall be designed for horizontal transportation in the hot cell **following by vertical up-ending**. The reboiler and

support assemblies shall have tailing lug and tilt-up features for vertical installation with a 2-ton hoist for tailing operation.

3.19.6 The lifting lugs shall be designed to permit lifting the equipment skid without distortion or damage to the components of the equipment skid.

3.19.7 All lifting points shall be proof tested in situ. Test and examination certificates shall be provided to the Buyer review.

3.19.8 Each reboiler and support frame assembly shall be lift tested by the Seller to demonstrate proper vertical orientation using the Seller-supplied lifting fixture. This testing includes verification of all tilt up features. Each reboiler shall be balanced after fabrication. Actual vertical lift (with vessel empty) shall not more than 1/4 inch from true verticality. Permanent deflection or a change in the assembly alignment is unacceptable. The Seller shall notify the Buyer a minimum of 15 working days in advance of reboiler and support frame assembly lift test. The Buyer may send representatives to witness the inspections or perform an independent inspection.

3.20 Accessibility and Maintenance

3.20.1 General Maintenance Requirements

Accessibility and maintenance requirements shall be per this specification and its addenda and attachments.

3.20.2 R5/C5 Black Cell Equipment Maintenance Requirements

3.20.2.1 No equipment requiring maintenance, with the exception of demister pads, shall be located inside the R5/C5 black cells (rooms P-0106 and P-0117). The nonreplaceable 40-year life components shall include offgas piping, separator vessels and all its internal parts (except demister pads) and their supporting structures/anchorage.

3.20.2.2 Demister pad assembly shall be remotely removable and replaceable through a 10-foot diameter opening from the 56-foot elevation floor, rooms P-0304 and P-0311, which are directly above the black cells P-0106 and P-0117. If the water connections for the spray connections for the spray down mechanism are incorporated into the pad assembly, the connections shall utilize a quick disconnect type connection for the water source. Due to potential radiation and contamination concerns, viewing and removal of the of the demister pad will be accomplished with the top demister pads submerged approximately 6-inch below the water during the maintenance duration. Seller shall demonstrate and record on VHS format video tape demister pad removal and replacement in their shop test.

3.20.3 R5/C5 Hot Cell Equipment Maintenance Requirements

3.20.3.1 Reboiler and support frame assemblies and recirculation pumps in the R5/C5 hot cell shall be designed to be remotely removable and replaceable in accordance with specification 24590-WTP-3PS-M000-T0002, *General Specification for Mechanical Handling Equipment Design and Manufacture*. No components shall require special tools.

3.20.3.2 Reboiler and support frame assemblies and recirculation pumps in R5/C5 hot cell shall be designed in accordance with the requirements stated within this specification.

3.20.3.3 Each reboiler and support frame assembly shall not weigh more than 27.5 tons, including all required lifting fixtures.

3.20.3.4 All fittings, pipe connections, electrical power, and control connections for equipment in R5/C5 hot cell shall be engineered on jumpers suitable for remote operation using a crane hook and crane mounted impact wrench with CCTV cameras.

3.20.3.5 Reboiler and support frame **assemblies** and recirculation pumps shall be made suitable for remote operation utilizing features such as trunnions, guide pins, location dowels, captive bolts, and lead-ins on bolts, and be able to be removed using a crane hook and crane mounted impact wrench with CCTV cameras. Refer to Appendix G for remote impact wrench and drawings nos. 24590-WTP-M0-M10T-00004 and 24590-PTF-M0-PIH-00008 for crane details.

3.20.3.6 The use of shims to position reboiler and support frame assemblies or recirculation pumps in the R5/C5 hot cell is not allowed. All surfaces shall be machined to locate equipment and support remote handling and replaceability.

3.20.3.7 Due to the requirement of a 12-foot reserved path for equipment removal in the hot cell, Seller shall comply with the location requirements for reboiler and support frame assemblies and recirculation pumps as shown in sketches in Appendices I and Q.

3.20.3.8 All services to or from the recirculation pumps shall be provided using jumper connections.

3.20.3.9 The maximum height of any 2-inch hex nut (jumper connector), oriented vertically, is 24 ft-6 inches in plant elevation.

3.20.3.10 The maximum height of any 2-inch hex nut (jumper connector), oriented horizontally, is 25 ft-6 inches in plant elevation.

3.20.3.11 The maximum height of the 2 ton slewing hoist is 28 ft-6 inches.

3.20.3.12 The maximum height and hook approach of the 30 ton hook is distinctly different than the 2 ton hoist. Refer to the crane data sheet, 24590-PTF-MJD-PIH-00001 for details.

3.20.4 Deleted.

4 Materials

4.1 Positive Material Identification

Refer to Buyer's specification 24590-WTP-3PS-G000-T0002, *Specification for Positive Material Identification (PMI)* for PMI requirements. Seller shall submit documentation of all PMI test results which show chemical properties and material classification.

4.2 Construction

4.2.1 Seller shall specify surface finish for all materials and submit to Buyer for review.

4.2.2 Seller shall maintain a record of ASTM numbers, material test reports, and manufacturer material certifications for all materials used for construction of evaporator equipment/skids. Seller shall provide copies to the Buyer.

4.2.3 All stainless steel bolts and studs shall conform to ASTM F593.

4.2.4 All stainless steel nuts shall conform to ASTM F594.

4.2.5 Seller shall provide Material Safety Data Sheets (MSDSs) for all materials installed or used.

4.2.6 Process fluids may contain caustic solutions (50 wt % caustic), however 5 M nitric acid solutions may also be used for decontamination of the pipework, pumps, valves, and instruments/instrument tubing both inside and outside of the pipework assembly.

4.2.7 All flanges and pipe fittings shall conform to ASME B31.3 1996 and be weld-neck and long radius type, respectively, unless otherwise specified. Flanges shall also be in accordance with ASME B16.5, and B16.47 Series A, as applicable.

4.2.8 No threaded flanges or fittings shall be used **in the black cells.**

4.2.9 Certified material test reports shall be supplied for all stainless steel pipe, plate, sheet, and sections.

4.2.10 Selection of materials for threaded components shall minimize galling. Where the Seller determines that potential for galling is present assuming proper removal and reinstallation, designs shall be considered that favor components that are difficult to replace remotely. The Seller shall also consider different material selection, sleeving, etc. where practical.

4.2.11 All materials used in the construction of the evaporator equipment shall be new and unused. Where specific criteria are not provided, material section shall be determined by the Seller and have properties and composition suitable for the specific service conditions and consistent with this specification and its addenda and attachments.

4.2.12 The alternate ASTM and **alternate ASME** standard editions listed below can be used in lieu of the **specified** editions in effect.

Alternate Materials	Specified Materials
ASTM A182-98, A182-01	ASTM A182/A182M-99
ASTM A312-04	ASTM A312/A312M-00c
ASTM A403-95	ASTM A403/A403M-99
ASTM A403-99	ASME Section II Part A, 2001 Edition 2002 Addenda, SA-403 / ASTM A403-95
ASTM A182-98	ASME Section II Part A, 2001 Edition 2002 Addenda, SA-182 / ASTM A182-99
ASME 2001 Edition SA-312, 2003 Addenda SA-312 ASME 1995 Edition SA-312, 1995 Addenda SA-312	ASME Section II Part A, 2001 Edition 2002 Addenda, SA-312 / ASTM A312-00c
ASME 1998 Edition SA-240, 2003 Addenda SA-240 ASME 1997 Addenda SA-240	ASME Section II Part A, 2001 Edition 2002 Addenda, SA-240 / ASTM A240-97a
ASTM A240-00, -02, -03, -03c, - 04a	ASTM A240/A240M-03b
ASME SFA 5.22 Part C - 1995 Edition 1996 Addenda	ASME SFA 5.22, Section II, Part C 2001 Edition 2002 Addenda
ASTM A480-03c	ATM A480-03b
ASTM 554-98, -03	ASTM 554-98el
ASME SFA-5.9, SFA5.22 Sec III, Subsec NB, 1995 Edition, 1996 Addenda	ASME Code, Section II, 2001 Edition with 2002 Addenda (weld wire)
ASME A240-00, -03 /A240-01	ASME A240/A240M-03b

4.3 Vessels

Vessel materials shall conform to individual MDS in section 2 of the MR.

4.4 Pipework

Pipework material shall meet the piping material requirements in Buyer's specification 24590-WTP-3PS-P000-T0001, *Specification for Piping Material Classes.*

4.5 Prohibited Materials

4.5.1 Mercury and other low melting point metals, their alloys, or materials containing such metals as their basic constituents shall not be used in the construction of any components of the evaporator systems.

4.5.2 Molybdenum and halides shall not be used in direct contact with stainless steel.

4.5.3 Asbestos shall not be included in any component of the evaporator systems.

4.5.4 Halide containing materials shall not be used in any component of the evaporator systems.

4.5.5 "Teflon" or compounds thereof must be qualified for use with the radiation levels specified in this specification.

4.6 Storage of Special Materials (e.g., stainless steel) prior to work

4.6.1 The Seller shall meet the storage requirements in Buyer's specification 24590-WTP-3PS-G000-T0003, *General Specification for Packaging, Shipping, Handling, and Storage Requirements.*

4.6.2 Stainless steel is susceptible to corrosion caused by the contact and interaction with incompatible materials. All stainless steel material shall be stored in separate areas away from other materials.

5 Fabrication

The Seller shall obtain written Final Design Review from the Buyer prior to the start of fabrication activities.

5.1 General

5.1.1 Fabrication of vessels shall be performed in accordance with Buyer's specification 24590-WTP-3PS-MV00-T0001, *Specification for Pressure Vessel Design and Fabrication.*

5.1.2 Fabrication of pipework shall be performed in accordance with Buyer's specification 24590WTP-3PS-PS02-T0001, *Specification for Shop Fabrication of Piping.*

5.1.3 Fabrication of mechanical handling equipment shall be performed in accordance with Buyer's specification 24590WTP-3PS-M000-T0002, *General Specification for Mechanical Handling Equipment Design and Manufacture.*

5.1.4 All fabrication shall be performed by personnel qualified in accordance with this specification and applicable documents in section 2 of this specification.

5.2 Welding

5.2.1 Seller shall develop detailed welding, weld inspection, NDE, and weld repair procedures for fabrication of the evaporator vessel, equipment, and structural supports. Seller shall submit them to the Buyer for review prior to fabrication. Procedures shall include acceptance criteria. The procedures shall conform to the following, as applicable:

- Buyer's Specification 24590-WTP-3PS-SS00-T0002
- Buyer's Specification 24590-WTP-3PS-NWP0-T0001
- Buyer's Specification 24590-WTP-3PS-MVB2-T0001
- ASME Boiler and Press Vessel Code, section VIII, Div. 1
- ASME B31.3-1996
- AWS D1.6
- AWS D9.1

5.2.2 Welding, weld inspection, NDE, and weld repair shall be carried out in accordance with the applicable procedures developed per section 5.2.1 above.

5.2.3 Each procedure shall be prepared and qualified in accordance with the requirements of the listed specification and standards in 5.2.1 above or ASME section IX, whichever is more stringent.

5.2.4 Welder qualifications shall be performed in accordance with ASME section IX or AWS as required.

5.2.5 Personnel performing weld inspection shall be qualified in accordance with ASME Boiler and Pressure Vessel Code, section VIII, Div. 1 and Buyer's specification 24590-WTP-3PS-SS00-T0002, *Specification for Welding of Structural Stainless Steel and Welding of Structural Carbon Steel to Structural Stainless Steel.*

5.2.6 Repairs required as a result of weld rejection by either the Buyer's or Seller's final inspection shall be fully documented in accordance with Seller's Quality Assurance Program (QAP). Weld repairs shall be performed in accordance with ASME Boiler and Pressure Vessel Code, section VIII. Weld repair records shall be included with Seller's quality verification document package to be submitted to Buyer.

6 Inspections and Examinations

6.1 Nondestructive Examinations

6.1.1 Unless otherwise specified, all vessel welds shall be inspected in accordance with the requirements outlined in the Buyer's specification 24590-WTP-3PS-MV00-T0001, *Specification for Pressure Vessel Design and Fabrication.*

6.1.2 Unless otherwise specified all pipework welds shall be inspected in accordance with the requirements outlined in Buyer's specification 24590-WTP-3PS-PS02-T0001, *Specification for Shop Fabrication of Piping*. For nondestructive examination (NDE) of fabricated pipe welds. Appendix O of this evaporator specification, 24590-PTF-3PS-MEVV-T0001, shall be used in replacement of Appendix A of specification for Shop Fabrication of Piping, 24590-WTP-3PS-PS02-T0001.

6.2 Dimensional Inspections

6.2.1 Refer to Buyer's specification 24590-WTP-3PS-PP00-T0002, *Specification for Dimensional Record Program*, for final dimensional measurement requirements. Third party validation of special dimensional inspection is not required.

6.2.2 Buyer's specification 24590-WTP-3PS-PP00-T0002, *Specification for Dimensional Record Program*, is applicable only to recirculation pumps and reboiler and support frame assemblies and does not apply to any other components.

6.2.3 For recirculation pumps, a dimensional record is required for remotable pump features that are not part of the process jumper. The process portion of the recirculation pump will be installed in a jumper, and the jumper dimensional record will be performed by the Buyer.

6.2.4 For reboilers, all remote connector nozzles shall be measured to precise as-built dimensions.

6.2.5 Seller shall furnish personnel to perform measurement activities.

6.3 Visual Weld Inspections

6.3.1 The Seller shall develop and implement a procedure to perform visual weld inspections (visual tests, VT) to inspect each weld. The inspection procedure shall be developed in accordance with Buyer's specification 24590-WTP-3PS-MVB2-T0001, *Specification for Welding Pressure Vessels, Heat Exchangers and Boilers* and ASME B31.3 1996, and shall include inspection materials and acceptance criteria.

6.3.2 Acceptance criteria for visual weld inspections for vessels shall be in accordance with Buyer's specification 24590-WTP-3PS-MVB2-T0001, *Specification for Welding Pressure Vessels, Heat Exchangers and Boilers* and for pipework shall be in accordance with ASME B31.3 1996.

6.3.3 The Seller shall prepare a visual weld inspection report for each fabricated item.

6.3.4 Deleted.

6.3.5 Deleted.

6.3.6 The Seller shall notify the Buyer in advance of inspections. The Buyer may send representatives to witness inspections or perform independent inspections.

6.4 Liquid Penetrant Test

6.4.1 The Seller shall develop and implement a procedure to perform a liquid penetrant test (PT) to inspect each weld. The procedure shall be developed in accordance with Buyer's specification 24590-WTP-3PS-MVB2-T0001, *Specification for Welding Pressure Vessels, Heat Exchangers and Boilers* and ASME B31.3 1996, and shall include inspection materials, dwell time for dye and developer, and acceptance criteria.

6.4.2 Acceptance criteria for PT inspection shall be in accordance with Buyer's specification 24590-WTP-3PS-MVB2-T0001, *Specification for Welding Pressure Vessels, Heat Exchangers and Boilers* and for pipework shall be in accordance with ASME B31.3 1996.

6.4.3 The Seller shall prepare a liquid penetrant test report for each weld connection on each fabricated item.

6.4.4 Deleted.

6.4.5 Deleted.

6.4.6 The Seller shall notify the Buyer in advance of testing. The Buyer may send representatives to witness testing or perform independent tests.

6.5 Radiography

6.5.1 Radiographic examinations shall be carried out on all primary containment pipework butt-welds using 100 % radiography for QL components. For all other quality levels, refer to Appendix O of this specification for radiographic examination requirements.

6.5.2 The Seller shall develop and implement a procedure to perform radiographic weld examinations of piping butt-welds. The procedure shall be developed in accordance with ASME B31.3 1996, and shall include examination materials and acceptance criteria.

6.5.3 Deleted.

6.5.4 Deleted.

6.5.5 The Seller shall provide radiographic film with technique and reader sheets. Exposed film must be sent, along with a copy of the technique and reader sheets in accordance with section 3 of the MR. Film must be suitably packaged to preclude moisture and handling damage.

6.5.6 The Seller shall notify the Buyer in advance of examinations. The Buyer may send representatives to witness or perform independent examinations.

6.6 Magnetic Particle Examination

6.6.1 The Seller shall develop and implement a procedure to perform magnetic particle examination. The procedure shall be submitted to the Buyer for review prior to fabrication.

6.6.2 Magnetic particle examination (MT) shall be in accordance with ASTM Specification E709.

6.6.3 **Welds specified under AWS D1.1 will be evaluated and accepted under** criteria **of** AWS **D1.1 Table 6.1**.

6.7 Final Inspection

6.7.1 The Seller shall develop and implement a procedure for final inspection of each fabricated item. The inspections shall be performed after completion of all fabrication, cleaning, and testing, and just prior to final packaging. The inspections shall include inspection of all surfaces for contamination. Visible evidence of contamination is not acceptable.

6.7.2 The Seller shall prepare a final inspection report for each item, which documents the results of the final inspection. The Seller shall include the final inspection report in the documentation package for each piece.

6.8 Inspection and Test Status

The Seller shall maintain a positive system for identifying inspection and testing status of items and systems.

6.9 Control of Nonconforming Items

The Seller shall use the Supplier Deviation Disposition Request per MR section 2 to notify the Buyer of fabricated items and fabrication activities not conforming to the requirements. Any nonconforming work shall be redone by the Seller at Seller's cost.

7 Testing

7.1 Shop Tests

7.1.1 The Buyer reserves the right to witness all shop tests and shall be given a minimum of 10 working days written notice prior to each test date.

7.1.2 All pipework shall be hydrostatically tested in accordance with ASME B31.3 1996. Test water used for hydrostatic testing shall be tested for chlorides. The chloride content of the test water shall not exceed 50 ppm and the water temperature shall not exceed 120 °F. Buyer shall review all test pressures prior to commencement of any testing. The testing results shall be documented and provided to Buyer.

7.1.3 Testing of vessels shall be performed in accordance with Buyer's specification 24590-WTP-3PS-MV00-T0001, *Specification for Pressure Vessel Design and Fabrication.*

7.1.4 Functional tests of evaporator equipment/skids shall be performed by the Seller. **If the antifoam agitator is tested by the fabricator prior to shipment to the vessel shop, then functional test of the antifoam tank/agitator assembly as a unit is not required.**

7.1.5 Seller shall demonstrate and record on VHS format video tape demister pad removal. Test shall be done with equipment representative of what will actually be installed and utilized in the Buyer's facility.

7.1.6 Seller will furnish lifting yokes details for separator vessels, reboiler and support frame assemblies, and recirculation pumps. All Seller supplied lifting yokes shall be load tested to 1.5 times the design load.

7.1.7 Each evaporator equipment skid shall be lift tested by the Seller to demonstrate proper vertical orientation using the Seller-supplied tooling and fixtures. This testing includes verification of all tilt up features. During the lift test the deflection at the midpoint of each skid shall be monitored and recorded to ensure that proper alignment is maintained. The centerline of the evaporator skid shall be within ±1 inch of true vertical when measured from the lift point. Permanent deflection or a change in the evaporator skid alignment is unacceptable.

7.1.8 Seller shall furnish blind flanges or other acceptable closures for the nozzles, as required for hydrotesting. Closures shall be removed after testing, unless they are required for shipment.

7.1.9 Deleted.

7.1.10 All test results shall be documented, certified, and submitted to the Buyer for review.

7.2 Integrated Acceptance Tests

An Integrated Acceptance Test **(stimulant test) using stable (non-radioactive) cesium is not required. The specified requirements provided in this section shall be used only for determining minimum separator decontamination factor.**

7.2.1 Performance

7.2.1.1 Limiting the entrainment of radionuclides from the evaporator to the primary condenser is an important safety function. During cold commissioning, the performance of the evaporator system will be measured using surrogate chemicals to determine the degree of entrainment from the evaporator to the primary condenser. Stable (nonradioactive) cesium will be the surrogate of choice for simulating radionuclide carryover to the condensing system.

7.2.1.2 Steady state operation is defined as:

- Liquid density of the concentrate ranges from 1.22 to 1.25 g/ml at operating temperature.
- Sodium cation and nitrate, hydroxide, chloride anions are the predominate soluble chemical analytes in the concentrate.
- The soluble concentration of stable (nonradioactive) cesium in the evaporator bottoms (concentrate) is no greater than 41.5 milligrams per liter.

7.2.1.3 The following criteria must be met prior to final acceptance of the evaporator system design:

- At steady state operation, the time-average mass rate of stable (nonradioactive) cesium carry-over from the evaporator to the condensing system shall not exceed 1.0 E-04 gram during any 24 hour period.
- At steady state operation, the instantaneous mass rate of stable (nonradioactive) cesium carry-over from the evaporator to the condensing system shall not exceed 1.0 E-03 gram in any one (1) hour period.

7.2.1.4 The performance testing and acceptance criteria shall apply over a boil-off range from 10 gpm to 30 gpm of total condensate, as measured in the condensate receiver vessel.

7.2.1.5 Performance testing shall be corrected for uncertainty in instrument and analytical measurements.

7.2.1.6 Relative performance indicators include:

- The estimated mass distribution ratio (mass rate of cesium removed with the overhead/mass rate of cesium in the feed) at steady state is approximately 1.0E-07.
- The estimated decontamination factor (concentration of cesium in the feed / concentration of cesium in the overheads) at steady state is approximately 8.0E+06.
- The estimated concentration of cesium in the condensate from the condensing system ranges from 6.0E-04 to 1.8E-03 microgram per liter.

7.2.2 A full simulation of abnormal shutdown conditions.

8 Preparation for Shipment

8.1 General Requirements

8.1.1 The evaporator equipment/skids shall be packaged/prepared for shipment, handled, and stored in accordance with the following requirements in

- Section 7 of the MR.
- Buyer's Specification 24590-WTP-3PS-G000-T0003, *General Specification for Packaging, Shipping, Handling, and Storage Requirements.*
- Buyer's Specification 24590-WTP-3PS-PS02-T0001, *Specification for Shop Fabrication of Piping.*
- Buyer's Specification 24590-WTP-MV00-T0001, *Pressure Vessel Design and Fabrication.*

8.1.2 Seller shall ensure that appropriate documentation is prepared and, if required, signed by the appropriate person(s). The shipping documentation shall accurately reflect specific traceability to the items being shipped.

8.1.3 Seller shall ensure that appropriate documentation is prepared for the evaporator equipment/skids. At a minimum, documentation shall include the following information, as applicable:

- Manufacturer name, model number, and serial number.
- Skid number.
- Plant item number.

8.1.4 Solvents and cleaning solutions used on stainless steel shall have a halogen content of less than 200 ppm.

8.1.5 Recirculation pumps will be shipped only in temporary shipping skids not meant for installation. The reboiler and support frame assemblies shall be transported from the Seller site to the Buyer site in the horizontal orientation due to air lock size limits.

8.1.6 Separator vessels will be shipped on temporary shipping skids. The installation skids are shipped separately, each in two pieces because of their height.

8.1.7 Lifting weight shall be clearly marked on both the equipment skid and its shipping documentation.

8.1.8 Regarding Buyer's Specification 24590-WTP-3PS-PS02-T0001, *Specification for Shop Fabrication of Piping,* polyethylene wrap can be used **for off-gas piping pieces** and subsequent blocking using Styrofoam cushioning and equivalent backed by plywood/wood to provide protection against damage or access by elements. Special end caps are not required.

8.2 Painting

8.2.1 Stainless steel shall not have coating applied.

8.2.2 Seller shall submit the information requested on Form H (see appendix S) along with technical data sheet and MSDS. Supplier shall provide Certificate of Conformance verifying application of coating in compliance with coating manufacturer's Technical Product Data Sheet.

8.2.3 All painting and coating shall be applied in accordance with the manufacturer's directions for application.

8.2.4 Exposed carbon steel surface shall be primed and painted with enamel base coating in accordance with the coating manufactures surface and application requirements. All visible oil, grease, dust, dirt, mill scale, rust, coating, oxides, corrosion products and other foreign matter shall be removed prior to application of primer. See section 8.2.14 and 8.2.15 for custom fabricated equipment.

8.2.5 In the absence of standard manufacturer's colors, the finish coat of all carbon steel items and equipment shall be ANSI 70 Gray. Contrasting colors shall be used for fasteners and bails.

8.2.6 Repainting by the Seller, or custom finishing by the manufacturer shall not be required when commercially available components and equipment which are normally mass produced, inventoried, supplied from stock, and have been coated with the manufacturer's standard coating system.

8.2.7 Surfaces exposed to the environment, but inaccessible after assembly, shall be coated prior to assembly.

8.2.8 Painting of interior and enclosed surfaces of the equipment, such as inside a welded box section, is not required.

8.2.9 Machined carbon steel mating surfaces and other surfaces not protected by coating system (such as seal surfaces, threaded surfaces, lifting hooks, hook nuts, wheel treads, gears, shafts, pinions, and couplings), shall be protected with a solvent cutback asphalt temporary preservative (Dauber Chemical Tectyl 891, EF Houghton Chemical Rust Veto 342 or Buyer's accepted equivalent) for shipment and storage. The Seller shall specify which preservatives must be removed and how the preservatives are removed by the Buyer before operation of the equipment.

8.2.10 Welds shall be coated only after completion of the required tests. Required tests include leak tightness, hydrostatic testing or other NDE of the welds.

8.2.11 Filler, sealant, and caulking compounds shall be compatible with the coating system.

8.2.12 The lifting fixtures for separator vessel shall be safety yellow # 13655 in accordance with FEP-STD 595B, *Colors Used in Government Procurement*. The lifting fixtures can be coated with the manufacturer's standard coating systems.

8.2.13 Items covered by 8.2.14 and 8.2.15, shall be surface prepared in accordance with SSPC SP10. For repair, the surfaces shall be prepared in accordance with SPPC SP11.

8.2.14 For support frames for steam conditioning skids and reboiler transporter, Seller shall use two coats (P04) of Epoxy with 4-6 mils per coat. Acceptable coating products for P04 are as follows:

8.2.14.1 Amercoat 385 from Ameron

8.2.14.2 Carboguard 890 from Carbonline

8.2.14.3 224HS from Devoe

8.2.14.4 Protecto-Coat 330 or 300 from Dudick

8.2.14.5 Intergard 475HS from International

8.2.14.6 Macropoxy 646 from Sherwin Williams

8.2.15 For reboiler and recirculation pump lifting beams, Seller shall use three coats with 1st coat (P02) of Epoxy Primer with 3-5 mils and (P06) Epoxy Novolac with 5 - 10 mils for 2nd and 3rd coats. Acceptable coating products for P02 are as follows:

8.2.15.1 Amercoat 68HS from Ameron

8.2.15.2 Carbozinc 859 from Carbonline

8.2.15.3 313 from Devoe

8.2.15.4 Interzinc 52 from International

8.2.15.5 Zinc Clad IV from Sherwin Williams

Acceptable coating products for P06 are as follows:

8.2.15.6 Amercoat 91 from Ameron

8.2.15.7 Phenoline 1205 FR from Carbonline

8.2.15.8 253 from Devoe

8.2.15.9 Protecto-Coat 100XT or EN from Dudick

8.2.15.10 Intertherm 875 HS from International

8.2.15.11 Macropoxy 646 from Sherwin Williams

8.3 Tagging

8.3.1 Tagging of the evaporator component, equipment, and skids shall be per this specification and the applicable documents listed in section 2 of this specification. Plant item numbers for evaporator component/equipment shall be per the data sheets that are in section 2 of the MR.

8.3.2 Instruments shall have nameplates installed per section 8 of Buyer's specification 24590-WTP-3PS-JQ07-T0001, *Engineering Specification for Instrumentation for Package Systems*.

8.3.3 Motors shall have nameplates per section 3 of Buyer's specification 24590-WTP-3PS-MUMI-T0002, *Engineering Specification for Low Voltage Induction Motors*.

8.3.4 Packages shall be suitably marked on the outside to facilitate identification of the purchase order, the procurement specification, the package contents, and any special handling instructions.

8.3.5 Slinging points and orientation for storage shall be clearly marked.

8.3.6 Temporary material such as bolting and shipping material shall have clear identification per sections 3.13 and 3.13.12 of Buyer's specification 24590-WTP-GPP-GCB-00100, *Field Materials Management.*

8.3.7 A stainless steel nameplate shall be rigidly attached to the evaporator equipment skid packages in a prominent position for ease of visibility, and shall include the following:

- Manufacturer's name.
- Shop location.
- Date of manufacture.
- Serial number.
- Skid number.
- Weight of assembly.
- Purchase order number.

9 Quality Assurance

9.1 General Commercial Designation (CM) Requirements

9.1.1 The Seller's Quality Assurance Program (QAP) Requirements are included in 24590-WTP-3PS-G000-T0001, *Supplier Quality Assurance Program.*

9.1.2 Seller's QAP Manual shall be submitted to buyer for review in accordance with 24590-WTP-3PS-G000-T0001, *Supplier Quality Assurance Program.*

9.1.3 Seller's QAP, as a minimum, shall contain the requirements of DOE Order 414.1A as detailed in the Supplier Quality Assurance Program Requirements Data Sheets listed in section 2 of the MR. The very same requirements shall be passed down to any lower tier subcontractor.

9.2 Quality Level (QL) Requirements

9.2.1 Seller shall have in place a QA program meeting the requirements marked as applicable in Supplier Quality Assurance Program Requirements Data Sheet attached to the MR, and Buyer's specification 24590-WTP-3PS-G000-T0001.

9.2.2 Seller shall demonstrate that its quality program is in compliance with the procurement quality requirements listed in the Supplier Quality Assurance Program Requirements Data Sheet. The Supplier shall allow the Buyer, its agent, and DOE access to their facilities and records pertaining to this purchase order for the purpose of QA Audits and Surveillance at mutually agreed times.

9.2.3 All items shall be manufactured in accordance with the Supplier's Quality Assurance Program that has been previously evaluated and accepted by the RPP-WTP Quality Organization. The very same requirements shall be passed down to any lower tier subcontractor.

9.2.4 Seller shall submit their QA program and work plan to Buyer for review prior to commencement of work. The plan shall include documents and procedures to implement the work and include a matrix of essential Quality Assurance elements cross referenced with the documents/procedures.

10 Configuration Management

Equipment and/or components covered by this specification are identified with Plant Item Numbers shown in the attached data sheets in section 2 of the MR. Each item shall be identified in accordance with section 8.3 of this specification.

11 Documentation and Submittals

11.1 General

11.1.1 Seller shall submit to Buyer all detailed designs, drawings, documentation, procedures, instructions, calculations, analyses, manufacturer documentation, manufacturer data, inspection reports, test reports, certifications, certificates, manuals, MSDSs, video tapes, and drawings required per this specification, the applicable codes, standards, and reference documents in section 2 of this specification, and the MR.

11.1.2 All detailed designs, drawings, assembly drawings, shop drawings, final P&IDs, MDSs, supporting calculation, supporting analyses, and all other requirements in the 60 % design stage shall be issued to the Buyer for review prior to fabrication of evaporator vessels and equipment.

11.1.3 Seller shall submit to Buyer Engineering and Quality Verification documents in the forms and quantities shown in Form G-321-E, *Engineering Document Requirements*, and Form G-321-V, *Quality Verification Document Requirements* attached to the MR, section 3.

11.1.4 Seller shall submit a report identifying any deviations and/or conflicts per section 2 of the MR to the Buyer for review.

11.1.5 Each documentation transmittal package shall have a documentation inventory sheet attached listing all documents and the number of pages each.

11.1.6 All documents submitted for review (e.g., General Arrangement, Shop Details, Calculations must contain their own unique NAME AND IDENTIFICATION NUMBER) Example:

Calculations for Item:
Document No: Calc TLP-PMP-00001-0001

11.1.7 Data sheets in section 2 of the MR shall be marked up by the Seller and submitted to the Buyer for review with the detailed design. Seller shall fill in all information that is marked as asterisk or TBD and markup actual overall dimensions for each evaporator component, equipment, and skid based on the detailed design.

11.1.8 All drawings shall be produced per the drawing practices set forth in ASME Y14.100, Engineering Drawing Practices.

11.2 Calculations

All calculations to be provided shall be orderly, complete, and sufficiently clear to permit verification. The body of the calculations shall include:

- A concise statement of the purpose of the calculation.
- Input data, applicable criteria, and stated assumptions.
- A list of references used, including drawings, codes, standards, and computer programs (indicate the version or issue date).
- A discussion of rationale used for design assumption basis.
- Equations used for all computations.
- Numerical calculation including identification of units used.
- A concise statement addressing the calculation results and/or recommendations.
- A table of contents for complex calculations.

Design Stress/Seismic Reports shall provided, as a minimum, the following information

11.2.1 ANSI/AISC N690 Steel Frame / Support Designs

For Finite Element Analysis (FEA) by Computer Program, submit the bases or reference to the bases that supports applicability of the computer program to the specific physical problem being solved. (i.e; application /validation to steel code formulas and allowable stresses)

11.2.2 ASME VIII, Div 2, Appendix 4, Vessel including internal supports/components

For FEA Computer Program analysis, submittal for the bases or reference to the bases supporting application of the computer program to the specific physical problem being solved. (i.e; application/validation to the ASME VIII, Div 2, Appendix 4, Maximum Shear Stress Theory.)

11.2.3 ASME B31.3 Piping Design

For FEA Computer Program analysis, submittal for the bases or reference to the bases supporting application of the computer program to the specific physical problem being solved. [i.e; application/validity to the ASME B31.3 design requirements in accordance with B31.3-96, section 300(c)(3)]

11.3 As-Built Drawings

11.3.1 Progress As-Builts

During construction, the Seller shall keep an updated marked-up set of progress as-built drawings on the jobsite as an accurate record of all deviations between the work, as shown on the Buyer reviewed drawings, and work as fabricated. These drawings shall be available to the Buyer for inspection at any time during regular business hours.

11.3.2 Final As-Builts

Seller shall furnish to Buyer final as-built drawings with AS-BUILT clearly printed on each sheet for all final work left in place. Seller shall accurately and neatly transfer all deviations from progress as-builts to final as-builts.

11.4 Dimensional Record Drawings

See 24590-WTP-3PS-PP00-T0002 for final dimensional measurement requirements. Third party validation of special dimensional inspection is not required. Seller shall furnish to Buyer dimensional record drawings for reboiler and support frame assemblies, and recirculation pumps with all their associated lifting yokes and/or lifting lugs.

11.5 Project Start

Seller shall submit drawing index and detailed schedule of engineering document submittals, material purchases, fabrication, shop test, and ready for shipment. Include bar charts or critical path method diagrams, which detail the chronological sequence of activities.

11.6 30 % Design Review

11.6.1 Provide drawings with outline dimensions, services, foundations, and mounting details of all three (3) evaporator systems. Drawings shall show external envelope, including lugs, centerline(s), location and size for electrical cable, conduit, fluid, other service connections, isometrics, and details related to foundations and mountings.

11.6.2 Provide preliminary dimension, location, and layout for all evaporator component, equipment, and skids.

11.6.3 Provide preliminary design of the demister pads replacement methodology.

11.6.4 Provide preliminary system description. Describe general system functions and basis of design. It shall include a systematic process flow diagram for system operation.

11.6.5 Provide preliminary Piping and Instrumentation Diagrams (P&IDs).

11.6.6 Provide preliminary instrument control requirements. Include system interlocks and control philosophy. Provide flow charts, schematics, logic diagrams, or function diagrams showing the equipment functional controls.

11.6.7 Provide document that describes the proposed equipment skids, including sketches of typical skids indicating skid-to-skid and skid-to-building interfaces, as well as the components included.

11.6.8 Identify all large and heavy items of equipment to ensure lifting capability during construction, maintenance, and decommissioning.

11.6.9 Provide preliminary electrical drawings, schematics, wiring drawings, and motor data sheets per Buyer's specifications 24590-WTP-3PS-MUMI-T0002 and 24590-WTP-3PS-EKP0-T0001.

11.7 60 % Design Review

11.7.1 Provide final P&IDs.

11.7.2 Provide final skid constructability study.

11.7.3 Provide final evaporator component, equipment, skid size, and layout.

11.7.4 Provide assembly drawings.

11.7.5 Provide shop detail drawings with sufficient detail to facilitate fabrication, manufacture, or installation. This includes a complete Bill of Materials (BOM), pipe spool drawings, internal piping and wiring details, cross-section details, and structural details.

11.7.6 Provide wiring diagrams including schematic diagrams, equipment internal wiring diagrams, and interconnection wiring diagrams for electrical items.

11.7.7 Submit completed Instrument and Mechanical data sheets for all instruments and equipment, utilizing Buyer's supplied instrument data sheet samples attached in section 2 of the MR as templates.

11.7.8 Provide functional test setpoints and recommended operating set points for the instrumentation and control packaged systems.

11.7.9 Provide final instrument control requirements including control loop definitions, system interlocks, alarms, and control philosophies. Control and sequencing requirements of the system and its components shall be detailed as described in section 3.5 of 24590-WTP-3PS-JQ07-T0001, *Engineering Specification for Instrumentation for Package Systems*.

11.7.10 Submit all final detailed drawings, calculations, analyses, and information necessary for evaporator vessels and equipment fabrication.

11.7.11 Submit all FMEA documentation.

11.7.12 Provide final electrical drawings, schematics, wiring drawings, motor data sheets, nameplates per Buyer's specifications 24590-WTP-3PS-MUMI-T0002 and 24590-WTP-3PS-EKP0-T0001.

11.8 90 % Design Review

11.8.1 Provide detailed written procedures, instructions, and drawings (including all lifting requirements) for evaporator system erection/installation.

11.8.2 Provide complete remote installation instructions for the utilization of the hot cell existing cranes for the needed reorientation, installation, and extraction of the reboiler.

11.8.3 Provide instrument installation details.

11.8.4 Provide list of required spares.

11.8.5 Provide startup and commissioning spares list, including all components or equipment that may be needed during startup and commissioning.

11.8.6 Provide operation manuals with detailed written instructions describing how the evaporator systems and components should be operated. Manuals shall include specific instructions, procedures, and illustrations for the following:

11.8.6.1 Safety Precautions – List personnel hazards and equipment or product safety precautions for all operating conditions.

11.8.6.2 Operator Prestart – Include requirements to set up and prepare each system for use.

11.8.6.3 Start-up, Shutdown, and Post-shutdown Procedures – Include a control sequence for each of these operations.

11.8.6.4 Normal Operations – Include control diagrams with data to explain operation and control of systems and specific equipment.

11.8.6.5 Emergency Operations – Include emergency procedures for equipment malfunctions to permit a short period of continued operation or to shut down the equipment to prevent further damage to systems and equipment. Include emergency shutdown instructions for fire, over-pressure, spills, or other foreseeable contingencies. Provide guidance on emergency operations of all utility systems including valve locations and portions of systems controlled.

11.8.6.6 Operator Service Requirements – Include instructions for services to be performed by the operator, such as lubrication, adjustments, and inspections.

11.8.6.7 Environmental Conditions – Include a list of environmental conditions (temperature, humidity, and other relevant data) which

are best suited for each product or piece of equipment and describe conditions under which equipment should not be allowed to run.

11.8.6.8 Lay-up Instructions – Include step-by-step instructions for lay-up.

11.8.7 Provide maintenance manuals with detailed written instructions to disassemble, reassemble, and maintain systems or components in an operating condition. Manuals shall include specific instructions, procedures, and illustrations for the following phases of maintenance:

11.8.7.1 Preventive Maintenance - Include the following information for preventive and scheduled maintenance to minimize corrective maintenance and repair:

11.8.7.1.1 Lubrication Data – Include lubrication data, other than instructions for lubrication, in accordance with operator service requirements to be included in operation manuals.

11.8.7.1.2 Preventive Maintenance Plan and Schedule – Include manufacturer's schedule for routine preventive maintenance, inspections, testing, and adjustments required to ensure proper and economical operation and to minimize corrective maintenance and repair. Provide manufacturer's projection of preventive maintenance frequency of work, and hours to complete the task. Provide surveillance and in-service inspection recommendations.

11.8.7.2 Corrective Maintenance – Include manufacturer's schedule for procedures and instructions for correcting problems and making repairs. Include the following information for performing corrective maintenance:

11.8.7.2.1 Troubleshooting Guide and Diagnostic Techniques – Include step-by-step procedures to promptly isolate the cause of typical malfunctions. Describe clearly why the checkout is performed and what conditions are to be sought. Identify tests or inspections and test equipment required to determine whether parts and equipment may be reused or require replacement.

11.8.7.2.2 Wiring Diagrams and Control Diagrams – Wiring diagrams and control diagrams shall be point-to-point drawings of wiring and control circuits including factor-field interfaces. Provide a complete and accurate depiction of the actual job specific wiring and control work. On diagrams, number electrical and electronic wiring and pneumatic control tubing, as well as the terminals for each type, identical to actual installation numbering.

11.8.7.2.3 Maintenance and Repair Procedures – Include instructions and list tools required to restore product or equipment to proper condition or operating standards.

11.8.7.2.4 Removal and Replacement Instructions – Include step-by-step procedures and list required tools and supplies for removal, replacement, disassembly, and assembly of components, assemblies, subassemblies, accessories, and attachments. Provide all tolerances, dimensions, settings, and adjustments required. Instructions shall include a combination of text and illustrations.

11.8.7.2.5 Recommended Spare Parts and Supply Lists – Include list of spare parts and supplies required for maintenance and repair to ensure continued service or operation without unreasonable delays. Include the cost of each item.

11.8.7.2.6 MSDSs – Include MSDSs for all chemicals and hazardous materials supplied as part of the product, system, or equipment. In addition, include MSDSs for all chemicals and hazardous materials required to be added (lubricants, antifreeze, etc.).

11.8.7.2.7 Parts Identification – Provide identification and coverage for all parts of each component, assembly, subassembly, and accessory of the end items subject to replacement. Include special hardware requirements, such as requirement to use high-strength bolts and nuts. Identify parts by make, model, serial number, and source of supply to allow reordering without further identification. Provide clear and legible illustrations, drawings, and exploded views to enable easy identification of the items. When illustrations omit the part numbers and description, both the illustration and separate listing shall show the index, reference, or key number which will cross-reference the illustrated part to the listed part. Parts shown in the listings shall be grouped by components, assemblies, and subassemblies.

11.8.7.2.8 Other than Seller's Commercial Practice – End item manufacturer may add a cross-reference to implement component assemblies and parts requirements when implementation in manual form varies significantly from the style, format, and method of Seller's standard commercial practice.

11.8.7.2.9 Warranty Information – List and explain the various warranties and include the servicing and technical precautions prescribed by the Seller or contract documents to keep warranties in force.

11.8.7.2.10 Personnel Training Requirements – Provide information available from the Seller to use for training designated personnel to operate and maintain the equipment and systems properly.

11.8.7.3 Calibration Testing Equipment and Special Tool Information – Include information on test equipment required to perform specific tests and on special tools needed for the operation, maintenance, and repair of components.

11.8.8 Provide system, component, and instrumentation descriptions as identified below:

11.8.8.1 System Descriptions - Include comprehensive system description describing, in detail, how the overall system functions, and the basic design basis. Include component interfaces and interactions. Provide a systematic process flow diagram for system operation.

11.8.8.2 Component Descriptions – Include comprehensive component descriptions describing, in detail, how each individual process component functions and the basic design basis. Include other component interfaces and interactions. Provide a systematic process flow diagram for component operation.

11.8.8.3 Instrument Descriptions – Include a list or table describing instrument ID number, ID name, location, and basic operating function. Include separately, in systematic descriptive detail, instrument controls and logic that correspond to instrumentation and logic diagrams.

11.8.9 Provide design and operational requirements per the following:

11.8.9.1 Design requirements – Include a list or table describing the maximum design limits and conditions required to safely operate the equipment (i.e., temperatures, pressures, etc.).

11.8.9.2 Operational requirements – Include a list or table describing the normal operating ranges for equipment (i.e., temperatures, pressures, etc.).

11.8.10 Provide analysis and design reports, including analytical data (stress, electrical loading, fluid dynamics, etc.) which demonstrates that an item satisfies all specified requirements.

11.8.11 Provide seismic analysis or test data reports providing data and demonstrating suitability of materials, components, or systems in relation to the conditions imposed by the stated seismic criteria.

11.8.12 Provide thermal stress analysis or test data reports providing data and demonstrating suitability of materials, components, or systems in relation to the conditions imposed by thermal stresses.

11.8.13 Provide site storage and handling manuals including the requirements and time period for lubrication, rotation, heating, lifting, or other handling requirements to prevent damage or deterioration during storage and handling at job site. Include return shipping instructions.

11.8.14 Provide inspection and test plan including detailed descriptions of the inspections and tests planned during the receipt, manufacturing, and conformance verification activities. Include identification of witness and hold points.

11.8.15 Provide welding procedures, specifications, and supporting qualification records required for welding, hard facing, overlaying, brazing, and soldering.

11.8.16 Provide material control procedures including controlling issuance, handling, storage, and traceability of materials such as weld rod.

11.8.17 Provide PMI procedures for performing PMI testing of materials.

11.8.18 Provide repair procedures including controlling material removal and replacement by welding, brazing, etc., subsequent thermal treatments, and final acceptance inspection.

11.8.19 Provide pressure testing procedures including hydro, air, leak, separation, or vacuum test procedures for performing hydrostatic or pneumatic structural integrity and leakage tests.

11.8.20 Provide inspection procedures for the purpose of determining that specified requirements (i.e., dimensions, properties, performance results, etc.) are met.

11.8.21 Provide radiographic testing procedures for identifying the presence and certain characteristics of discontinuities and inclusions in materials by x-ray or gamma ray exposure of photographic film.

11.8.22 Provide liquid penetrant testing procedures for detection of surface discontinuities in materials by application of a penetrating liquid in conjunction with suitable developing techniques.

11.8.23 Provide functional shop test procedures to demonstrate that design function and operational parameters are met (e.g., pump performance data, valve stroking, load, temperature rise, calibration, environment, etc.).

11.8.24 Provide integrated acceptance test requirements document per engineering specifications to demonstrate design function and operational parameters for the complete assembled evaporator systems.

11.8.25 Provide electrical test procedures to demonstrate that design function and operational parameters are met (e.g., impulse, overload, continuity, voltage, temperature rise, calibration, saturation loss, etc.).

11.8.26 Provide shipping preparation procedures for cleaning, packaging, and handling.

11.9 Final Design Review

Provide final design report including all design documents, manuals, and drawings that are specified in this specification. All procedures and instructions shall be completed and submitted to the Buyer a minimum of eight (8) weeks prior to evaporator components, equipment, and skid shipment.

APPENDIX A

WASTE FEED EVAPORATOR STREAM DATA

Stream Description	Evaporator Feed	Evaporator Concentrate	Process Condensate
Specific Gravity	1.050882E+00	1.197295E+00	1.000072E+00
pH	1.227066E+01	1.305375E+01	9.325531E+00
Total Volume (gpm)	1.962454E+01	3.234591E+00	1.710009E+01
Total Mass (lb/hr)	1.030370E+04	1.934908E+03	8.544156E+03
Na Molarity	8.231085E-01	5.000000E+00	3.116202E-05
Activity (Ci/gallon)			
129-I	1.070549E-07	6.456333E-07	7.335298E-10
134-Cs	6.794152E-06	4.120906E-05	2.202542E-09
137-Cs	1.531654E-01	9.292679E-01	1.866905E-09
14-C	4.343208E-06	2.632459E-05	4.923495E-09
126-Sn	3.687065E-07	2.235285E-06	3.195409E-10
233-U	7.147865E-07	4.333113E-06	6.729994E-10
235-U	5.308471E-09	3.218466E-08	4.216552E-12
152-Eu	1.787821E-06	1.083834E-05	1.612622E-09
154-Eu	1.047067E-04	6.347777E-04	9.210747E-08
155-Eu	2.783818E-05	1.688275E-04	1.307200E-08
237-Np	1.743947E-07	1.057294E-06	1.462592E-10
238-Pu	1.558783E-06	9.457271E-06	1.600678E-13
239-Pu	2.427044E-05	1.472509E-04	1.683651E-12
240-Pu	6.791157E-06	4.120253E-05	7.334047E-13
241-Am	1.539731E-04	9.341677E-04	4.075735E-11
243-Am	5.791005E-05	3.513452E-04	7.425120E-12
242-Cm	2.927004E-07	1.774511E-06	2.511805E-10
241-Pu	5.791005E-05	3.513452E-04	7.425120E-12
243-Cm	4.125221E-08	2.501032E-07	3.356803E-11
244-Cm	8.401929E-07	5.093914E-06	6.825013E-10
3-H	1.025165E-05	2.637668E-05	6.775766E-06
60-Co	1.897588E-06	1.150925E-05	6.773841E-10
90-Sr	2.251101E-02	1.365762E-01	1.437153E-09
99-Tc	5.315124E-04	3.223320E-03	2.669563E-07
125-Sb	6.485595E-05	3.931850E-04	1.619373E-07
Specific Mass (wt%)			
Ag+	0.0000851	0.0004528	0.0000000
Al+3	0.1407107	0.7486167	0.0001564
B+3	0.0002618	0.0013935	0.0000002
Ba+2	0.0001225	0.0006518	0.0000001
Bi+3	0.0001670	0.0008883	0.0000002
Ca+2	0.0023604	0.0125596	0.0000022
Cd+2	0.0006340	0.0033758	0.0000000
Cl-	0.0256441	0.1362996	0.0000587
CO3-2	0.3966942	2.1103727	0.0004730
Cr(TOTAL)	0.0140436	0.0747823	0.0000005
Cs+	0.0001128	0.0006007	0.0000000

F-	0.0209444	0.1115277	0.0000010
Fe+3	0.0111118	0.0591522	0.0000045
Hg+2	0.0001399	0.0007446	0.0000001
K+	0.0677068	0.3604479	0.0000230
La+3	0.0004065	0.0021647	0.0000000
Li+	0.0002899	0.0015438	0.0000000
Mg+2	0.0002586	0.0013766	0.0000001
Mn+4	0.0012678	0.0067511	0.0000001
Mo+6	0.0002105	0.0011200	0.0000002
Na+	1.8061286	9.6176128	0.0000717
NH3	0.0163755	0.0051900	0.0185725
Ni+2	0.0023278	0.0023372	0.0022779
NO2-	0.4747226	2.5269331	0.0002360
NO3-	3.5169979	18.6961248	0.0073514
OH(BOUND)	0.1876967	0.9986652	0.0001926
OH-	0.0301822	0.1605662	0.0000360
Pb+2	0.0007719	0.0040181	0.0000209
Phosphor containing components	0.0646907	0.3441493	0.0000768
Se+6	0.0010836	0.0057700	0.0000001
Si+4	0.0121852	0.0648277	0.0000137
SO4-2	0.0669264	0.3561423	0.0000570
Sr+2	0.0000854	0.0004544	0.0000001
Ti+4	0.0000312	0.0001660	0.0000000
TOC	0.0494322	0.2459911	0.0039049
U(TOTAL)	0.0002514	0.0013377	0.0000003
Zn+2	0.0001314	0.0006996	0.0000000
Zr+4	0.0115379	0.0613963	0.0000102
H2O	92.3882691	63.2687429	99.9664571
H+	0.0000000	0.0000000	0.0000000
CO2	0.0000000	0.0000000	0.0000000
Total Dissolved Solids (Na Excluded) (wt%)	5.0601243	26.7981844	0.0334712
Total Suspended Solids (wt%)	0.7454780	0.3154599	0.0000000

APPENDIX B

TREATED LAW EVAPORATOR STREAM DATA

Stream Description	Feed Treated LAW	Feed Neutralized Effluent	Concentrated LAW	Condensate from LAW Evap
Specific Gravity	1.201279E+00	9.960371E-01	1.354830E+00	1.000211E+00
pH	1.400000E+01	1.199980E+01	1.400000E+01	1.108047E+01
Total Volume (gpm)	1.398842E+01	9.800359E+00	8.316158E+00	1.574299E+01
Total Mass (lb/hr)	8.395616E+03	4.877051E+03	5.629209E+03	7.867172E+03
Na Molarity	4.654928E+00	9.564147E-02	8.001080E+00	1.384081E-04
Activity (Ci/gallon)				
129-I	4.749081E-07	0.000000E+00	7.940393E-07	2.531875E-09
134-Cs	1.575297E-08	4.663790E-10	2.703969E-08	4.038980E-12
137-Cs	3.359384E-04	9.978015E-06	5.768332E-04	3.256697E-12
14-C	3.582432E-05	0.000000E+00	6.019971E-05	3.147259E-08
126-Sn	1.430030E-06	0.000000E+00	2.403044E-06	1.256318E-09
233-U	8.109593E-07	0.000000E+00	1.362748E-06	7.124486E-10
235-U	7.044819E-09	0.000000E+00	1.183822E-08	6.189054E-12
152-Eu	1.012468E-05	0.000000E+00	1.701366E-05	8.894794E-09
154-Eu	1.453164E-04	0.000000E+00	2.441918E-04	1.276642E-07
155-Eu	3.750157E-05	0.000000E+00	6.301818E-05	3.294609E-08
237-Np	6.467932E-07	0.000000E+00	1.086881E-06	5.682244E-10
238-Pu	1.128371E-06	0.000000E+00	1.898007E-06	2.681847E-13
239-Pu	2.250086E-05	0.000000E+00	3.784818E-05	5.347876E-12
240-Pu	6.141525E-06	0.000000E+00	1.033052E-05	1.459683E-12
241-Am	1.046161E-04	0.000000E+00	1.759723E-04	6.571346E-11
243-Am	4.604254E-05	0.000000E+00	7.744709E-05	1.094313E-11
242-Cm	3.178432E-07	0.000000E+00	5.341082E-07	2.792334E-10
241-Pu	4.604254E-05	0.000000E+00	7.744709E-05	1.094313E-11
243-Cm	4.969903E-08	0.000000E+00	8.351496E-08	4.366187E-11
244-Cm	9.701220E-07	0.000000E+00	1.630207E-06	8.522771E-10
3-H	4.475971E-05	0.000000E+00	3.012124E-05	2.385981E-05
60-Co	5.350007E-06	0.000000E+00	8.990228E-06	4.700118E-09
90-Sr	1.768254E-02	0.000000E+00	2.974328E-02	6.760816E-08
99-Tc	1.119640E-04	0.000000E+00	1.881459E-04	9.836324E-08
125-Sb	2.554858E-04	0.000000E+00	4.293221E-04	2.244509E-07
Specific Mass (wt%)				
Ag+	0.0001789	0.0000000	0.0002666	0.0000002
Al+3	0.8781368	0.0000000	1.3083917	0.0009266
B+3	0.0011040	0.0000000	0.0016449	0.0000012
Ba+2	0.0003972	0.0000000	0.0005919	0.0000004
Bi+3	0.0009166	0.0000000	0.0013656	0.0000010
Ca+2	0.0036401	0.0000000	0.0054235	0.0000039
Cd+2	0.0001758	0.0000000	0.0002620	0.0000002
Cl-	0.1927241	0.3081970	0.5533995	0.0007536
CO3-2	1.8709695	0.0000000	2.7876764	0.0019741
Cr(TOTAL)	0.0436851	0.0000000	0.0651518	0.0000013

Cs+	0.0000002	0.0000000	0.0000003	0.0000000
F-	0.1369480	0.0311205	0.2312023	0.0000068
Fe+3	0.0051922	0.0000000	0.0077362	0.0000055
Hg+2	0.0002119	0.0017125	0.0002775	0.0000002
K+	0.4371071	0.0000000	0.6517338	0.0001319
La+3	0.0000717	0.0000000	0.0001068	0.0000001
Li+	0.0001031	0.0000000	0.0001537	0.0000001
Mg+2	0.0007039	0.0000000	0.0010487	0.0000007
Mn+4	0.0003630	0.0000000	0.0005408	0.0000004
Mo+6	0.0014914	0.0000000	0.0022221	0.0000016
Na+	8.9124915	0.2205096	13.4830308	0.0003183
NH3	0.0556091	0.0000000	0.0046946	0.0559853
Ni+2	0.0010718	0.0000000	0.0000905	0.0010791
NO2-	3.6214624	0.0000000	5.3989608	0.0015931
NO3-	8.2610982	0.1691503	12.4458561	0.0154626
OH(BOUND)	1.2709676	0.0000000	1.8936954	0.0013410
OH-	1.9297357	0.0170413	2.8899856	0.0020466
Pb+2	0.0022422	0.0000000	0.0032374	0.0000764
Phosphor containing components	0.2305136	0.0000000	0.3434569	0.0002432
Se+6	0.0007265	0.0000000	0.0010825	0.0000008
Si+4	0.0190601	0.0000000	0.0283989	0.0000201
SO4-2	0.4242482	0.0000000	0.6322928	0.0003199
Sr+2	0.0002059	0.0000000	0.0003067	0.0000002
Ti+4	0.0000875	0.0000000	0.0001303	0.0000001
TOC	0.1782369	0.0000016	0.2481087	0.0126807
U(TOTAL)	0.0014123	0.0000000	0.0021042	0.0000015
Zn+2	0.0001606	0.0000000	0.0002393	0.0000002
Zr+4	0.0092074	0.0000000	0.0137187	0.0000097
H2O	71.5070307	98.7871894	55.3633120	99.9050111
H+	0.0000000	0.0000000	0.0000000	0.0000000
CO2	0.0000000	0.0000000	0.0000000	0.0000000
Total Dissolved Solids (Na Excluded) (wt%)	19.5804777	0.5272233	29.5260185	0.0946707
Total Suspended Solids (wt%)	0.0000000	0.4650777	1.6276387	0.0000000

APPENDIX C

Predicted Maximum Radionuclide

Stream Number	Waste Feed Evaporators			Treated LAW Evaporator		
Stream Description	**FEP Feed**	**FEP Concentrate**	**FEP Overhead**	**TLP Feed**	**TLP Concentrate**	**TLP overhead**
Specific Gravity	1.108297E+00	1.291591E+00	1.000111E+00	1.105304E+00	1.278000E+00	1.000163E+00
pH	1.312459E+01	1.389913E+01	1.017151E+01	1.321351E+01	1.386570E+01	1.029492E+01
Total Volume (gpm)	1.921589E+01	3.462492E+00	2.248903E+00	1.074593E+01	2.391253E+00	1.179073E+00
Total Mass (lb/hr)	1.066579E+04	2.239702E+03	8.426084E+03	5.948428E+03	1.530498E+03	4.417929E+03
Na Molarity	1.678973E+00	1.000000E+01	6.235205E-05	2.217504E+00	9.964802E+00	8.915611E-05
Activity (Ci/gallon)						
129-I	1.118972E-06	5.133318E-06	1.657679E-06	6.388461E-07	2.124451E-06	1.513816E-06
134-Cs	1.129467E-04	6.250516E-04	2.728177E-06	2.084563E-08	9.341234E-08	5.370692E-10
137-Cs	4.359059E+00	2.419159E+01	2.232506E-06	4.525083E-04	2.033504E-03	4.407797E-10
14-C	1.530790E-05	8.491637E-05	5.895986E-08	8.056168E-06	3.616737E-05	7.268873E-08
126-Sn	1.923017E-04	1.067222E-03	1.486077E-10	2.043400E-08	9.173655E-08	1.841322E-10
233-U	1.150416E-06	6.384484E-06	1.248818E-11	1.717230E-09	7.709344E-09	1.547408E-11
235-U	6.946466E-07	3.853045E-06	3.162332E-09	4.348219E-07	1.952093E-06	3.918211E-09
152-Eu	6.188336E-04	3.434357E-03	6.581440E-10	9.049626E-08	4.062746E-07	8.154683E-10
154-Eu	6.562753E-02	3.642143E-01	8.345943E-07	1.147543E-04	5.151790E-04	1.034060E-06
155-Eu	3.737761E-02	2.074354E-01	2.034016E-07	2.796783E-05	1.255590E-04	2.520201E-07
237-Np	9.537993E-05	5.293324E-04	2.536272E-10	3.487470E-08	1.565667E-07	3.142584E-10
238-Pu	4.520421E-04	2.508710E-03	2.573295E-11	1.309172E-06	5.883206E-06	3.191544E-11
239-Pu	3.985830E-03	2.212027E-02	5.228669E-11	2.660106E-06	1.195409E-05	6.484898E-11
240-Pu	2.153818E-04	1.195310E-03	4.564062E-11	2.321981E-06	1.043461E-05	5.660605E-11
241-Am	4.833846E-02	2.682652E-01	3.172753E-09	6.111128E-05	2.746230E-04	3.937305E-09
241-Pu	2.838034E-02	1.575032E-01	8.472452E-10	4.310391E-05	1.937020E-04	1.050802E-09
242-Cm	4.706917E-15	2.611634E-14	8.863463E-18	1.212658E-15	5.444115E-15	1.092735E-17
243-Am	1.646951E-06	9.139638E-06	7.551321E-10	1.033137E-07	4.638171E-07	9.309668E-10
243-Cm	1.726031E-04	9.578996E-04	7.809701E-10	1.073837E-07	4.820890E-07	9.676419E-10
244-Cm	3.700041E-03	2.053421E-02	1.637305E-08	2.251301E-06	1.010701E-05	2.028663E-08
3-H	2.663313E-04	8.683912E-04	9.386773E-04	1.255884E-04	2.257503E-04	6.867589E-04
60-Co	1.287961E-02	7.147826E-02	6.882351E-08	9.462625E-06	4.248158E-05	8.526838E-08
90-Sr	1.320134E+01	7.326381E+01	2.292527E-06	7.286412E-03	3.274264E-02	2.857525E-06
99-Tc	3.006068E-02	1.668241E-01	6.876193E-06	2.174950E-04	9.764235E-04	1.959863E-06
125-Sb	4.141097E-02	2.298192E-01	6.367954E-09	8.755757E-07	3.930816E-06	7.889875E-09
Specific Mass (wt%)						
Ag+	0.000000	0.000000	0.000000	0.000000	0.000000	0.000000
Al+3	0.635506	3.025530	0.000224	0.266638	1.035288	0.000355
B+3	0.000135	0.000642	0.000000	0.080263	0.311642	0.000107
Ba+2	0.000074	0.000352	0.000000	0.000044	0.000172	0.000000
Bi+3	0.000068	0.000325	0.000000	0.000001	0.000004	0.000000
Ca+2	0.024647	0.117371	0.000000	0.050340	0.195456	0.000068
Cd+2	0.000067	0.000320	0.000000	0.000159	0.000619	0.000000
Cl-	0.003163	0.015034	0.000008	0.005424	0.021042	0.000014

CO3-2	1.242770	5.913663	0.001220	1.128055	4.379954	0.001504
Cr(TOTAL)	0.035967	0.171277	0.000001	0.030544	0.118710	0.000001
Cs+	0.001630	0.007759	0.000001	0.000000	0.000001	0.000000
F-	0.044968	0.214134	0.000002	0.067028	0.260499	0.000004
Fe+3	0.482484	2.297630	0.000007	0.019977	0.077566	0.000027
Hg+2	0.000456	0.002170	0.000000	0.000000	0.000000	0.000000
K+	1.096415	5.219836	0.000385	1.327461	5.157862	0.000500
La+3	0.010410	0.049572	0.000000	0.000119	0.000464	0.000000
Li+	0.000448	0.002130	0.000001	0.018270	0.070937	0.000024
Mg+2	0.000003	0.000016	0.000000	0.009913	0.038490	0.000013
Mn+4	0.047130	0.224438	0.000000	0.000360	0.001397	0.000000
Mo+6	0.000000	0.000000	0.000000	0.000000	0.000000	0.000000
Na+	3.931713	18.722852	0.000143	4.614350	17.933525	0.000205
NH3	0.011529	0.032152	0.006048	0.000354	0.000000	0.000448
Ni+2	0.021794	0.101921	0.000495	0.000086	0.000020	0.000108
NO2-	1.354414	6.447289	0.000698	1.559829	6.059939	0.000861
NO3-	4.344527	20.654158	0.009333	6.329382	24.557934	0.014488
OH(BOUND)	1.748240	8.324258	0.000297	0.274711	1.066633	0.000366
OH-	0.201424	0.958261	0.000252	0.251582	0.976831	0.000335
Pb+2	0.011534	0.054916	0.000003	0.000091	0.000342	0.000004
Phosphor components	0.040853	0.194443	0.000028	0.026038	0.101099	0.000035
Se+6	0.001869	0.008898	0.000001	0.001729	0.006714	0.000002
Si+4	0.074861	0.356440	0.000016	0.083117	0.322721	0.000111
SO4-2	0.494661	2.353991	0.000441	0.869199	3.375827	0.000831
Sr+2	0.001500	0.007143	0.000000	0.000039	0.000151	0.000000
Ti+4	0.000406	0.001934	0.000000	0.000638	0.002479	0.000001
TOC	2.874880	13.677296	0.003535	3.269664	12.695283	0.004358
U(TOTAL)	0.121728	0.579682	0.000001	0.000868	0.003370	0.000001
Zn+2	0.000235	0.001118	0.000000	0.030679	0.119120	0.000041
Zr+4	0.266983	1.271405	0.000001	0.008245	0.032015	0.000011
H2O	80.763931	8.482255	99.976817	79.669593	21.055761	99.975139
H+	0.000000	0.000000	0.000000	0.000000	0.000000	0.000000
CO2	0.000000	0.000000	0.000000	0.000000	0.000000	0.000000
Total Dissolved Solids (Na Excluded) (wt%)	11.304045	53.744832	0.023039	15.716052	61.010697	0.024656
Total Suspended Solids (wt%)	4.000310	19.050061	0.000000	0.000004	0.000016	0.000000

APPENDIX D

EVAPORATOR PROCESS DATA

PROCESS DATA SHEET: Mechanical Pump

PLANT ITEM No.
24590-PTF-FEP-PMP-00007A

Project:	RPP-WTP		System:		FEP			
Project No:	24590		Description:		Waste Feed Evaporator Feed Pump			
Site:	Hanford		Supporting Calcs No.		24590-PTF-MEC-FEP-00001, Rev. A			
Building No.:	10		Associated Drawings:		24590-PTF-M5-V17T-00004001, Rev. B			
PROCESS DATA	Units	Mode 1 (Note 1)	Mode 2 (Note2)	Mode 3 (Note 3)	Mode 4	ETC.		
Capacity Normal (Note 4)	gpm	50	39	36				
Capacity Rated	gpm	60	N/A	N/A				
Minimum Pumping Temperature	°F	59	59	59				
Normal Pumping Temperature	°F	77	77	77				
Maximum Pumping Temperature	°F	122	122	122				
Density at Normal Pumping Temperature (Note 7)	lb/ft^3	75.9	67.6	68.9				
Sp Gravity at Normal Pumping Temperature (Note 7)		1.23	1.08	1.10				
Viscosity at Normal Pumping Temperature	cP	11.8	11.8	11.8				
Vapor Press at Normal Pumping Temp	psia	0.43	0.44	0.44				
Origin Pressure	psia	14.61	14.61	14.61				
Delivery Pressure	psia	(Note 5)	(Note 5)	(Note 5)				
FLUID COMPOSITION								
Content Code (e.g., Type/Name of Liquid)								
Solids Content	% wt/wt	4	7	2				
Solids Size Range	microns	(Note 6)	(Note 6)	(Note 6)				
Solids Characteristics		(Note 6)	(Note 6)	(Note 6)				

Notes:
1. Mode 1 represents Envelope A waste feed and recycles required to meet production rate of 60 Mt/d LAW glass.
2. Mode 1 represents Envelope B waste feed and recycles required to meet production rate of 60 Mt/d LAW glass.
3. Mode 1 represents Envelope C waste feed and recycles required to meet production rate of 30 Mt/d LAW glass.
4. Minimum flowrate is 20 gpm for Envelope A, 25 gpm for Envelope B, and 23 gpm for Envelope C.
5. Delivery pressure to be determined by waste feed evaporator vendor.
6. Solids size range and characteristics to be determined by R&T.
7. Density and Specific Gravity based on pretreated AW-101 of same molarity. Does not include weight percent solids.

PROCESS DATA SHEET: Mechanical Pump

PLANT ITEM No.
24590-PTF-FEP-PMP-00007B

Project:	RPP-WTP		System:		FEP			
Project No:	24590		Description:		Waste Feed Evaporator Feed Pump			
Site:	Hanford		Supporting Calcs No.		24590-PTF-MEC-FEP-00001, Rev. A			
Building No.:	10		Associated Drawings:		24590-PTF-M5-V17T-00004001, Rev. B			
PROCESS DATA	Units	Mode 1 (Note 1)	Mode 2 (Note2)	Mode 3 (Note 3)	Mode 4	ETC.		
Capacity Normal (Note 4)	gpm	50	39	36				
Capacity Rated	gpm	60	N/A	N/A				
Minimum Pumping Temperature	°F	59	59	59				
Normal Pumping Temperature	°F	77	77	77				
Maximum Pumping Temperature	°F	122	122	122				
Density at Normal Pumping Temperature (Note 7)	lb/ft^3	75.9	67.6	68.9				
Sp Gravity at Normal Pumping Temperature (Note 7)	—	1.23	1.08	1.10				
Viscosity at Normal Pumping Temperature	cP	11.8	11.8	11.8				
Vapor Press at Normal Pumping Temp	psia	0.43	0.44	0.44				
Origin Pressure	psia	14.61	14.61	14.61				
Delivery Pressure	psia	(Note 5)	(Note 5)	(Note 5)				
FLUID COMPOSITION								
Content Code (e.g., Type/Name of Liquid)								
Solids Content	% wt/wt	4	7	2				
Solids Size Range	microns	(Note 6)	(Note 6)	(Note 6)				
Solids Characteristics	—	(Note 6)	(Note 6)	(Note 6)				

Notes:
1. Mode 1 represents Envelope A waste feed and recycles required to meet production rate of 60 Mt/d LAW glass.
2. Mode 1 represents Envelope B waste feed and recycles required to meet production rate of 60 Mt/d LAW glass.
3. Mode 1 represents Envelope C waste feed and recycles required to meet production rate of 30 Mt/d LAW glass.
4. Minimum flowrate is 20 gpm for Envelope A, 25 gpm for Envelope B, and 23 gpm for Envelope C.
5. Delivery pressure to be determined by waste feed evaporator vendor.
6. Solids size range and characteristics to be determined by R&T.
7. Density and Specific Gravity pretreated AW-101 of same molarity. Does not include weight percent solids.

PROCESS DATA SHEET: Mechanical Pump

PLANT ITEM No.
24590-PTF-FEP-PMP-00008A

Project:	RPP-WTP		System:		FEP			
Project No:	24590		Description:		Waste Feed Evaporator Concentrate Pump			
Site:	DOE Hanford		Supporting Calcs No.		24590-PTF-MEC-FEP-00001, Rev. A			
Building No.:	10		Associated Drawings:		24590-PTF-M5-V17T-00004002, Rev. B			
PROCESS DATA	Units	Mode 1 (Note 1)	Mode 2 (Note2)	Mode 3(Note 3)	Mode 4	ETC.		
Capacity Normal (Note 4)	gpm	28	14	14				
Capacity Rated	gpm	34	N/A	N/A				
Minimum Pumping Temperature	°F	59	59	59				
Normal Pumping Temperature	°F	122	122	122				
Maximum Pumping Temperature	°F	122	122	122				
Density at Normal Pumping Temperature (Note 7)	lb/ft^3	75.9	75.9	76.6				
Sp Gravity at Normal Pumping Temperature (Note 7)		1.23	1.23	1.25				
Viscosity at Normal Pumping Temperature	cP	5.5	5.5	5.5				
Vapor Press at Normal Pumping Temp	psia	1.3	1.3	1.2				
Origin Pressure	psia	Note 5	Note 5	Note 5				
Delivery Pressure	psia	14.6	14.6	14.6				
FLUID COMPOSITION								
Content Code (e.g., Type/Name of Liquid)								
Solids Content	% wt/wt	5	15	3				
Solids Size Range	microns	Note 6	Note 6	Note 6				
Solids Characteristics		Note 6	Note 6	Note 6				

Notes:
1. Mode 1 represents Envelope A concentrate required to meet production rate of 60 Mt/d LAW glass.
2. Mode 2 represents Envelope B concentrate required to meet production rate of 60 Mt/d LAW glass.
3. Mode 3 represents Envelope C concentrate required to meet production rate of 30 Mt/d LAW glass.
4. Minimum flowrate is 12 gpm for Envelope A, 4 gpm for Envelope B, and 3 gpm for Envelope C.
5. Origin pressure to be determined by treated LAW evaporator vendor.
6. Solids size range and characteristics to be determined by R&T.
7. Density and Specific Gravity based on pretreated AW-101 solutions of same molarity. Does not include weight percent solids.

PROCESS DATA SHEET: Mechanical Pump

PLANT ITEM No.
24590-PTF-FEP-PMP-00008B

Project:	RPP-WTP		System:		FEP			
Project No:	24590		Description:		Waste Feed Evaporator Concentrate Pump			
Site:	Hanford		Supporting Calcs No.		24590-PTF-MEC-FEP-00001, Rev. A			
Building No.:	10		Associated Drawings:		24590-PTF-M5-V17T-00004002, Rev. B			
PROCESS DATA	Units	Mode 1 (Note 1)	Mode 2 (Note2)	Mode 3(Note 3)	Mode 4	ETC.		
Capacity Normal (Note 4)	gpm	28	14	14				
Capacity Rated	gpm	34	N/A	N/A				
Minimum Pumping Temperature	°F	59	59	59				
Normal Pumping Temperature	°F	122	122	122				
Maximum Pumping Temperature	°F	122	122	122				
Density at Normal Pumping Temperature (Note 7)	lb/ft^3	75.9	75.9	76.6				
Sp Gravity at Normal Pumping Temperature (Note 7)		1.23	1.23	1.25				
Viscosity at Normal Pumping Temperature	cP	5.5	5.5	5.5				
Vapor Press at Normal Pumping Temp	psia	1.3	1.3	1.2				
Origin Pressure	psia	Note 5	Note 5	Note 5				
Delivery Pressure	psia	14.6	14.6	14.6				
FLUID COMPOSITION								
Content Code (e.g. Type/Name of Liquid)								
Solids Content	% wt/wt	5	15	3				
Solids Size Range	microns	Note 6	Note 6	Note 6				
Solids Characteristics		Note 6	Note 6	Note 6				

Notes:
1. Mode 1 represents Envelope A concentrate required to meet production rate of 60 Mt/d LAW glass.
2. Mode 2 represents Envelope B concentrate required to meet production rate of 60 Mt/d LAW glass.
3. Mode 3 represents Envelope C concentrate required to meet production rate of 30 Mt/d LAW glass.
4. Minimum flowrate is 12 gpm for Envelope A, 4 gpm for Envelope B, and 3 gpm for Envelope C.
5. Origin pressure to be determined by treated LAW evaporator vendor.
6. Solids size range and characteristics to be determined by R&T.
7. Density and Specific Gravity based on pretreated AW-101 solutions of same molarity. Does not include weight percent solids.

PROCESS DATA SHEET: Evaporator

PLANT ITEM No.
24590-PTF-FEP-EVAP-00001A

Project:	RPP-WTP	System:	FEP
Project No:	24590	Description:	Waste Feed Evaporator
Site:	Hanford	Supporting Calcs No.	24590-PTF-MEC-FEP-00001, Rev. B
Building No.:	10	Associated Drawings:	24590-PTF-M5-V17T-00004002, Rev. 0

UTILITIES DATA	Units	Cooling Water Note 1		High Pressure Steam	Instrument Air
Temperature	°F	83			60
Pressure	psig	65			100

PROCESS DATA	Units	Envelope A Feed Minimum Na	Envelope A Feed Maximum Na	Envelope A Concentrate	Envelope A Overheads	Envelope A Condensate	Evaporator Bypass (Envelop A) Feed (Recycles) Minimum Na (Note 14)	Evaporator Bypass (Envelop A) Feed (Recycles) Maximum Na (Note 14)	Evaporator Bypass (Envelop A) Concentrate (Note 14)
					Notes 5,9				
Liquid Flow (Note 4)	lb_m/hr	11,000	27,000	7,000 (Note 7)	N/A	14,900 (Note 8)	14,200	16,300 (Note 13)	14,200
Vapor Flow	lb_m/hr	N/A	N/A	N/A	14,900	N/A	N/A	N/A	N/A
Noncondensables Flow	lb_m/hr	N/A	N/A	N/A	42.7	N/A	N/A	N/A	N/A
Temperature (Note 6)	°F	77	77	122	111	111	77	77	122
Na Molarity		1.4	4	5	N/A	0	0.2	1	5
Density	lb_m/ft^3	67.8	75.9	74.0	0.0039	61.9	63.4	66.6	75.9
Specific Gravity		1.09	1.22	1.23	N/A	1	1.02	1.07	1.23
Viscosity	Cp	11.8	11.8	5.5	0.01	0.7	11.8	11.8	5.5
Specific Heat	BTU/lb_m°F	0.93	0.88	0.68	0.45	1	0.99	0.94	0.68
Thermal Conductivity	BTU/hr ft °F	0.36	0.39	0.39	0.01	0.37	0.353	0.369	0.39

	Units	Envelope B Feed Minimum Na	Envelope B Feed Maximum Na	Envelope B Concentrate	Envelope C Feed Minimum Na	Envelope C Feed Maximum Na	Envelope C Concentrate
Liquid Flow (Note 4)	lb_m/hr	13,000	21,100	8,490 (Note10)	11,900	19,800	8780 (Note 11)
Vapor Flow	lb_m/hr	N/A	N/A	N/A	N/A	N/A	N/A
Non-Condensables Flow	lb_m/hr	N/A	N/A	N/A	N/A	N/A	N/A
Temperature (Note 6)	°F	77	77	122	77	77	122
Na Molarity		0.78	1.81	5	0.77	2.30	6
Density (Note 12)	lbm/ft3	64.9	67.6	74.0	64.9	68.9	76.6
Specific Gravity (Note 12)		1.04	1.08	1.21	1.04	1.10	1.25
Viscosity	cP	11.8	11.8	5.5	11.8	11.8	5.5
Specific Heat	BTU/lbm°F	0.94	0.91	0.68	0.94	0.91	0.68
Thermal Conductivity	BTU/hr ft °F	0.377	0.385	0.39	0.377	0.385	0.39

Notes:
1. Maximum temperature and pressure of cooling water supply.
2. Temperature and pressure of steam supply.
3. Delete.
4. Evaporator to require 50% turndown capability.
5. Evaporator overheads prior to condensate removal.
6. Vacuum system to enable concentration of feed at reduced temperature
7. Maximum transfer rate. Minimum Transfer rate is 7,300 lbs/hr
8. Maximum evaporator overhead condensate production capacity. Envelope A average conditions require 11,800 lbs/hr.
9. Maximum overhead vapor and noncondensable flow. Average vapor flow is 11,800 lbs/hr. Noncondensable flow also applies to average conditions.
10. Maximum transfer rate. Minimum transfer rate is 2430 lbs/hr
11. Maximum transfer rate. Minimum transfer rate is 1880 lbs/hr.
12. Density and Specific Gravity based on sodium hydroxide solutions of same molarity. Does not include weight percent solids.
13. Maximum transfer rate. Minimum transfer rate is 7,300 lbs/hr.
14. Based on evaporator semibatch operation.
15. See sections 3.4, 3.5 for high pressure steam supply conditions.

PROCESS DATA SHEET: Evaporator

PLANT ITEM No.
24590-PTF-FEP-EVAP-00001B

Project:	RPP-WTP	System:	FEP
Project No:	24590	Description:	Waste Feed Evaporator
Site:	Hanford	Supporting Calcs No.	24590-PTF-MEC-FEP-00001, Rev. B
Building No.:	10	Associated Drawings:	24590-PTF-M5-V17T-00004002, Rev. 0

UTILITIES DATA	Units	Cooling Water Note 1		High Pressure Steam	Instrument Air
Temperature	°F	83			60
Pressure	psig	65			100

PROCESS DATA	Units	Envelope A Feed Minimum Na	Envelope A Feed Maximum Na	Envelope A Concentrate	Envelope A Overheads	Envelope A Condensate	Evaporator Bypass (Envelop A) Feed (Recycles) Minimum Na (Note 14)	Evaporator Bypass (Envelop A) Feed (Recycles) Maximum Na (Note 14)	Evaporator Bypass (Envelop A) Concentrate (Note 14)
					Notes 5,9				
Liquid Flow (Note 4)	lb_m/hr	11,000	27,000	7,000 (Note 7)	N/A	14,900 (Note 8)	14,200	16,300 (Note 13)	14,200
Vapor Flow	lb_m/hr	N/A	N/A	N/A	14,900	N/A	N/A	N/A	N/A
Noncondensables Flow	lb_m/hr	N/A	N/A	N/A	42.7	N/A	N/A	N/A	N/A
Temperature (Note 6)	°F	77	77	122	111	111	77	77	122
Na Molarity		1.4	4	5	N/A	0	0.2	1	5
Density	lb_m/ft^3	67.8	75.9	74.0	0.0039	61.9	63.4	66.6	75.9
Specific Gravity		1.09	1.22	1.23	N/A	1	1.02	1.07	1.23
Viscosity	Cp	11.8	11.8	5.5	0.01	0.7	11.8	11.8	5.5
Specific Heat	BTU/lb_m°F	0.93	0.88	0.68	0.45	1	0.99	0.94	0.68
Thermal Conductivity	BTU/hr ft °F	0.38	0.39	0.39	0.01	0.37	0.353	0.369	0.39

	Units	Envelope B Feed Minimum Na	Envelope B Feed Maximum Na	Envelope B Concentrate	Envelope C Feed Minimum Na	Envelope C Feed Maximum Na	Envelope C Concentrate
Liquid Flow (Note 4)	lb_m/hr	13,000	21,100	8,490 (Note10)	11,900	19,800	8780 (Note 11)
Vapor Flow	lb_m/hr	N/A	N/A	N/A	N/A	N/A	N/A
Non-Condensables Flow	lb_m/hr	N/A	N/A	N/A	N/A	N/A	N/A
Temperature (Note 6)	°F	77	77	122	77	77	122
Na Molarity		0.78	1.81	5	0.77	2.30	6
Density (Note 12)	lbm /ft3	64.9	67.6	74.0	64.9	68.9	76.6
Specific Gravity (Note 12)		1.04	1.08	1.21	1.04	1.10	1.25
Viscosity	cP	11.8	11.8	5.5	11.8	11.8	5.5
Specific Heat	BTU/lbm°F	0.94	0.91	0.68	0.94	0.91	0.68
Thermal Conductivity	BTU/hr ft °F	0.377	0.385	0.39	0.377	0.385	0.39

Notes:
1. Maximum temperature and pressure of cooling water supply.
2. Temperature and pressure of steam supply.
3. Delete.
4. Evaporator to require 50% turndown capability.
5. Evaporator overheads prior to condensate removal.
6. Vacuum system to enable concentration of feed at reduced temperature.
7. Maximum transfer rate. Minimum Transfer rate is 7,300 lbs/hr.
8. Maximum evaporator overhead condensate production capacity. Envelope A average conditions require 11,800 lbs/hr.
9. Maximum overhead vapor and noncondensable flow. Average vapor flow is 11,800 lbs/hr. Noncondensable flow also applies to average conditions.
10. Maximum transfer rate. Minimum transfer rate is 2430 lbs/hr.
11. Maximum transfer rate. Minimum transfer rate is 1880 lbs/hr.
12. Density and Specific Gravity based on sodium hydroxide solutions of same molarity. Does not include weight percent solids.
13. Maximum transfer rate. Minimum transfer rate is 7,300 lbs/hr.
14. Based on evaporator semibatch operation.
15. See section 3.4.3.3 for high pressure steam supply conditions.

PROCESS DATA SHEET: VESSEL & PUMPS				**Plant Item No.** 24590-PTF-MV-TLP-VSL-00009A 24590-PTF-MV-TLP-VSL-00009B 24590-PTF-MV-TLP-PMP-00005A 24590-PTF-MV-TLP-PMP-00005B
Project: RPP-WTP				
Project No: 24590	Description: Treated LAW SBS Condensate Receipt Vessels and Pumps			
Site: Hanford				
Building No.: 10	Associated Drawing: 24590-PTF-M5-V17T-00005			
SUMMARY DATA	Units	Minimum	Nominal	Maximum
Batch Volume	Gal	N/A	80,000	N/A
Transfer Rate	gpm	10	13	38
Receipt Rate	gpm	N/A	175	N/A
Fluid Temperature	°F	68	113	167
Specific Gravity	N/A	1.02	1.02	1.02
Viscosity	cP	1	1	1
Internal Pressure	psig	-0.22	-0.14	0
Solids Content	wt %	0.30	0.34	0.41

PROCESS DATA SHEET: SYSTEM TLP				
Project: RPP-WTP				
Project No: 24590		Description: Treated LAW Evaporation - System TLP		
Site: Hanford				
Building No.: 10		Associated Drawing: 24590-PTF-M5-V17T-00005		
SUMMARY DATA	Units	Minimum	Nominal	Maximum
Treated LAW (TXP14)				
Transfer Rate	gpm	11.4	14.3	17.9
Fluid Temperature	°F	59	77	113
Specific Gravity	N/A	1.15	1.20	1.22
Viscosity	cP	2.0	3.3	4.0
LAW SBS Condensate (RLD21)				
Batch Volume	Gal	N/A	80,000	N/A
Transfer Rate	gpm	10	13	38
Receipt Rate	gpm	N/A	175	N/A
Fluid Temperature	°F	68	113	167
Specific Gravity	N/A	1.02	1.02	1.02
Viscosity	cP	1	1	1
Thermal Conductivity	BTU/(hr*ft-°F)	N/A	0.372	N/A
Treated LAW Concentrate (TLP02)				
Transfer Rate	gpm	5.6	9.2	13.7
Fluid Temperature	°F	77	122	150
Specific Gravity	N/A	1.33	1.40	1.57
Viscosity	cP	12.8	12.8	30.0
Vapor Pressure	torr	55	67	77
Thermal Conductivity	BTU/(hr*ft-°F)	N/A	0.397	0.399

APPENDIX E

Quality Level and Seismic Category for Evaporator Equipment

SSC	Description	QL	SC
FEP Separator Vessels	FEP-SEP-00001A/B	**QL-1**	**SC-I**
• Demister Pads	Pad Materials	**CM**	**SC-II**
• Upper Demister Pad Supports	Structural supports	**CM**	**SC-II**
• Lower Demister Pad Supports	Structural supports	**QL-2**	**SC-II**
• Internal Piping/Misc.	Bubble trays, spray rings, dip legs, etc.	**QL-2**	**SC-II**
TLP Separator Vessel	TLP-SEP-00001	**QL-1***	**SC-I***
• Demister Pads	Pad Materials	**CM**	**SC-II**
• Upper Demister Pad Supports	Structural supports	**CM**	**SC-II**
• Lower Demister Pad Supports	Structural supports	**QL-2**	**SC-II**
• Internal Piping/Misc.	Bubble trays, spray rings, dip legs, etc.	**QL-2**	**SC-II**
Reboilers	FEP-RBLR-00001A/B	**QL-1**	**SC-I**
	TLP-RBLR-00001	**QL-1***	**SC-I***
Recirculation Pumps, Motors, Speed Adjustable Drives, and Seal Barrier Systems	FEP-PMP-00009A/B, FEP-MTR-00009A/B	**QL-1**	**SC-I**
	TLP-PMP-00001, TLP-MTR-00001	**QL-1***	**SC-I***
	FEP-ASD-00009A/B, TLP-ASD-00001, and Pump Seal Barrier Systems	**CM**	**SC-III**
Feed Pumps, Motors, and Speed Adjustable Drives	TLP-PMP-00005A/B, TLP-MTR-00005A/B, TLP-ASD-00005A/B	**CM**	**SC-III**
Concentrate Pumps, Motors, and Speed Adjustable Drives	TLP-PMP-00011A/B, TLP-MTR-00011A/B, TLP-ASD-00011A/B	**CM**	**SC-III**
Black Cell Separator Vessel Offgas Pipework	Piping from the top section of the FEP Evaporator separator vessels to the 56' Elev. floor (ceiling of black cell).	**QL-1**	**SC-I***
	Piping from the top section of the TLP Evaporator separator vessel to the 56' Elev. floor (ceiling of black cell).	**QL-1***	**SC-I***
Out-Cell Separator Vessel Offgas Pipework	Piping from 56' Elev. floor to the FEP Evaporator primary condenser in C3 room.	**QL-1**	**SC-I***
	Piping from 56' Elev. floor to the TLP Evaporator primary condenser in C3 room.	**QL-1***	**SC-I***
	FEP-COND-00001A/B FEP-COND-00002A/B FEP-COND-00003A/B FEP-EJCTR-00040, -00041, -00042,and -00043	**QL-1**	**SC-I***
	TLP-COND-00001 TLP-COND-00002 TLP-COND-00003 TLP-EJCTR-000064 and -00067	**QL-1***	**SC-I***
Condensate Collection Vessels	FEP-VSL-00005	**CM**	**SC-III**
	TLP-VSL-00002	**CM**	**SC-III**
Condensate Pumps, Motors, and Speed Adjustable Drives	FEP-PMP-00006A/B, FEP-MTR-00006A/B, FEP-ASD-00006A/B	**CM**	**SC-III**
	TLP-PMP-00002A/B, TLP-MTR-00002A/B, FEP-ASD-00002A/B	**CM**	**SC-III**
Antifoam Vessel	AFR-TK-00001	**CM**	**SC-IV**
Antifoam Pumps	AFR-PMP-00006, -00007, and –00008	**CM**	**SC-IV**

Steam Conditioning Skids	FEP Steam Conditioning Skids	**CM**	**SC-III**
	TLP Steam Conditioning Skid	**CM**	**SC-III**
Reboiler Steam Condensate Transfer Stations	FEP-VSL-00021, FEP-PMP-00010A/B FEP-VSL-00022, FEP-PMP-00011A/B	**CM**	**SC-III**
	TLP-VSL-00047, TLP-PMP-00012A/B	**CM**	**SC-III**

*These quality level and seismic category designations are higher than those required for safety as deemed necessary for commercial reasons. They are consistent with the Buyer's Authorization Basis document because they meet and exceed the minimum safety requirements. These designations are not necessarily reflected in their associated Buyer's P&IDs.

For CM material to the ASME or ASTM standards, any year of the standard is acceptable.

Note: QL-1 and QL-2 designations are used by the Seller to comply with other referenced specification requirements (i.e weld, design). These designations meet NQA-1 (QL) requirements and are not necessarily reflected in their associated Buyer's P&IDs.

APPENDIX F

SEPARATOR VESSEL SKID SUPPORT LAYOUT

SEPARATOR VESSEL, EMBEDDED PLATES & SKID

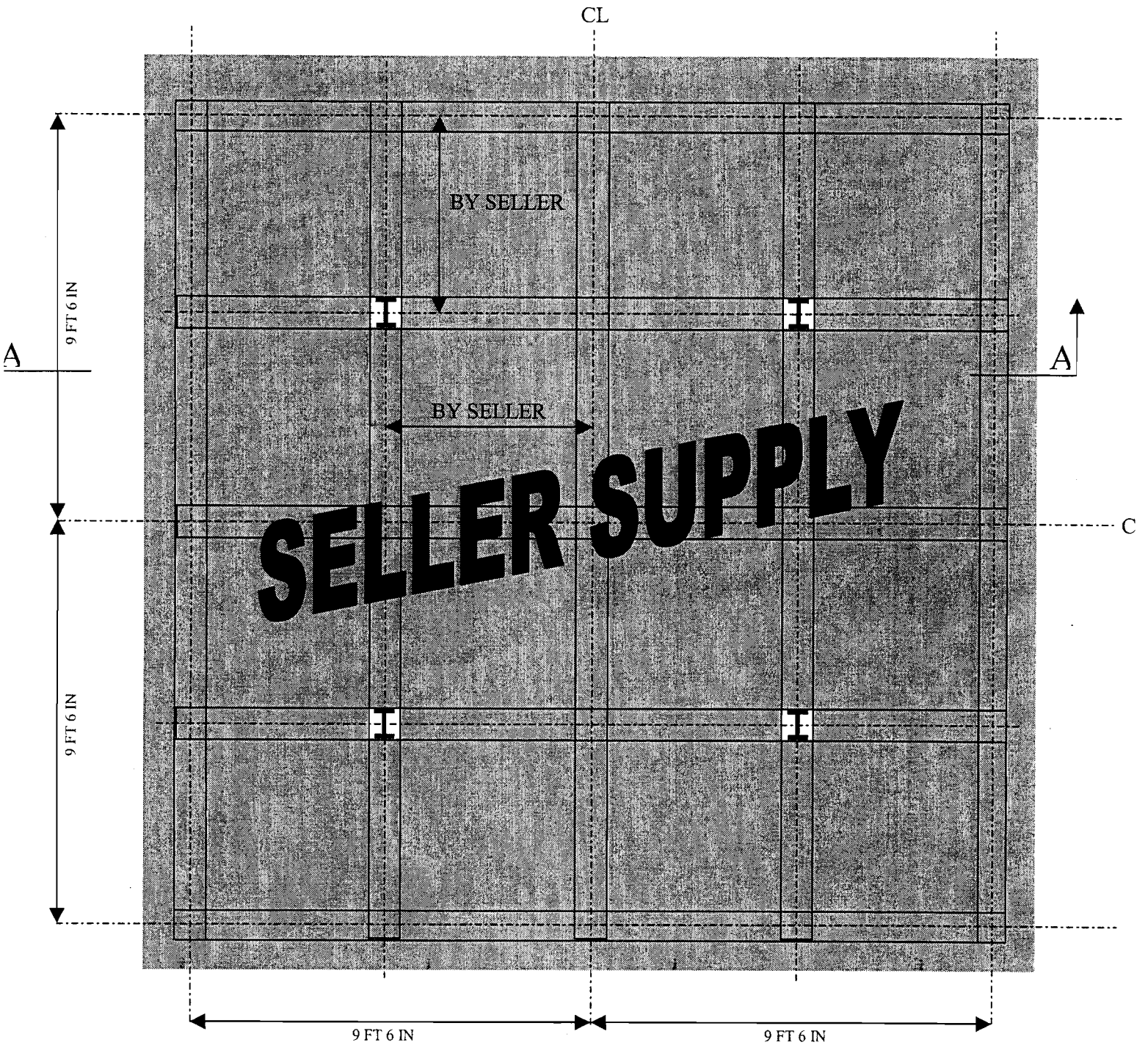

SKID PLAN VIEW

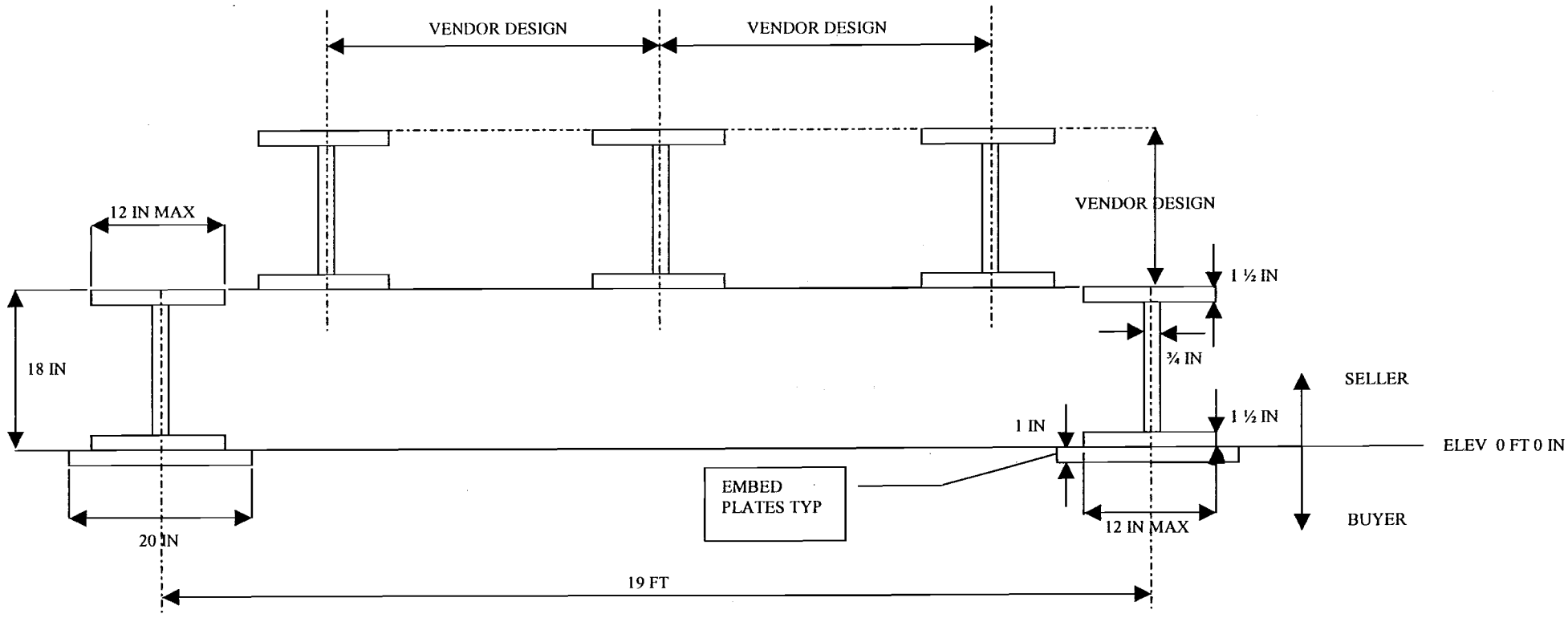
VENDOR DESIGN
VENDOR DESIGN
VENDOR DESIGN
12 IN MAX
18 IN
1 ½ IN
¾ IN
SELLER
1 IN
1 ½ IN
ELEV 0 FT 0 IN
EMBED
PLATES TYP
12 IN MAX
BUYER
20 IN
19 FT

SECTION A

APPENDIX G

HOT CELL REMOTE IMPACT WRENCH

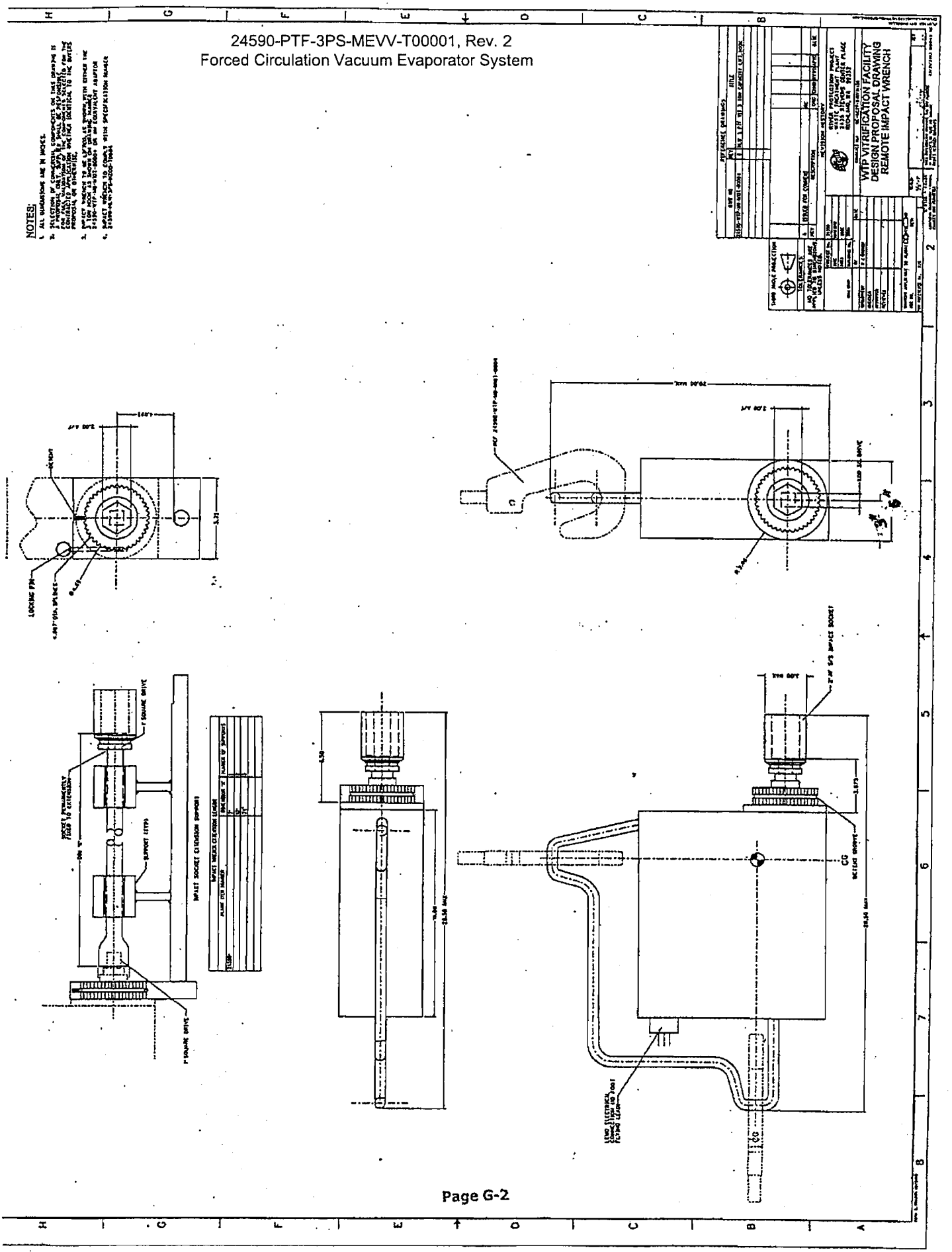
NOTES:
WTP VITRIFICATION FACILITY
DESIGN PROPOSAL DRAWING
REMOTE IMPACT WRENCH
LOCKING PIN
CG

APPENDIX H

Deleted

APPENDIX I

FEP EVAPORATOR EQUIPMENT SKIDS LOCATION AND LAYOUT SKETCHES

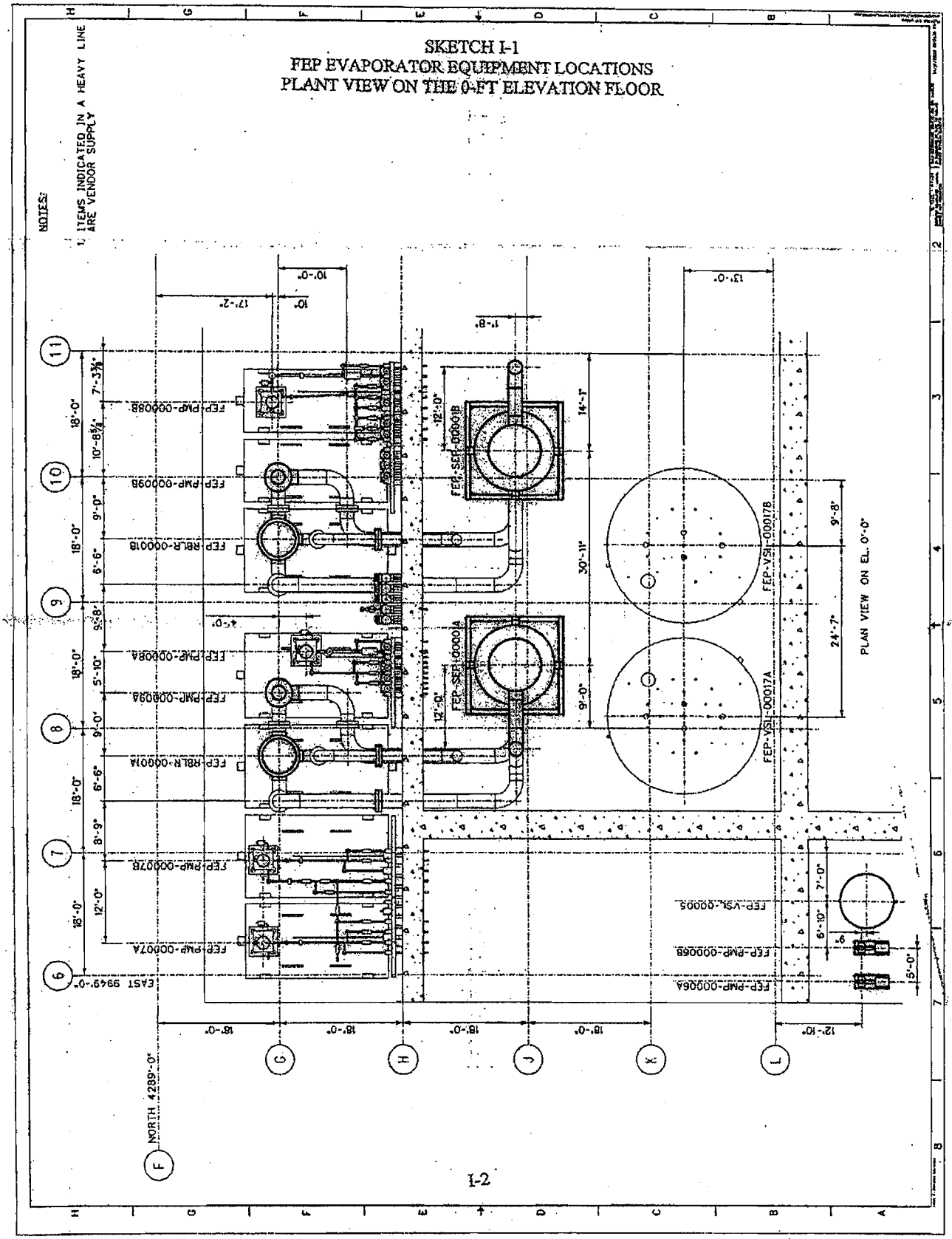
SKETCH I-1
FEP EVAPORATOR EQUIPMENT LOCATIONS
PLANT VIEW ON THE 0-FT ELEVATION FLOOR
NOTES:
1. ITEMS INDICATED IN A HEAVY LINE ARE VENDOR SUPPLY
PLAN VIEW ON EL. 0'-0"
FEP-SEP-00001B
FEP-SEP-00001A
FEP-VSL-00017B
FEP-VSL-00017A
FEP-PMP-00008B
FEP-PMP-00009B
FEP-RBLR-00001B
FEP-PMP-00008A
FEP-PMP-00009A
FEP-RBLR-00001A
FEP-PMP-00007B
FEP-PMP-00007A
FEP-VSL-00005
FEP-PMP-00006B
FEP-PMP-00006A
NORTH 4289'-0"
EAST 9949'-0"

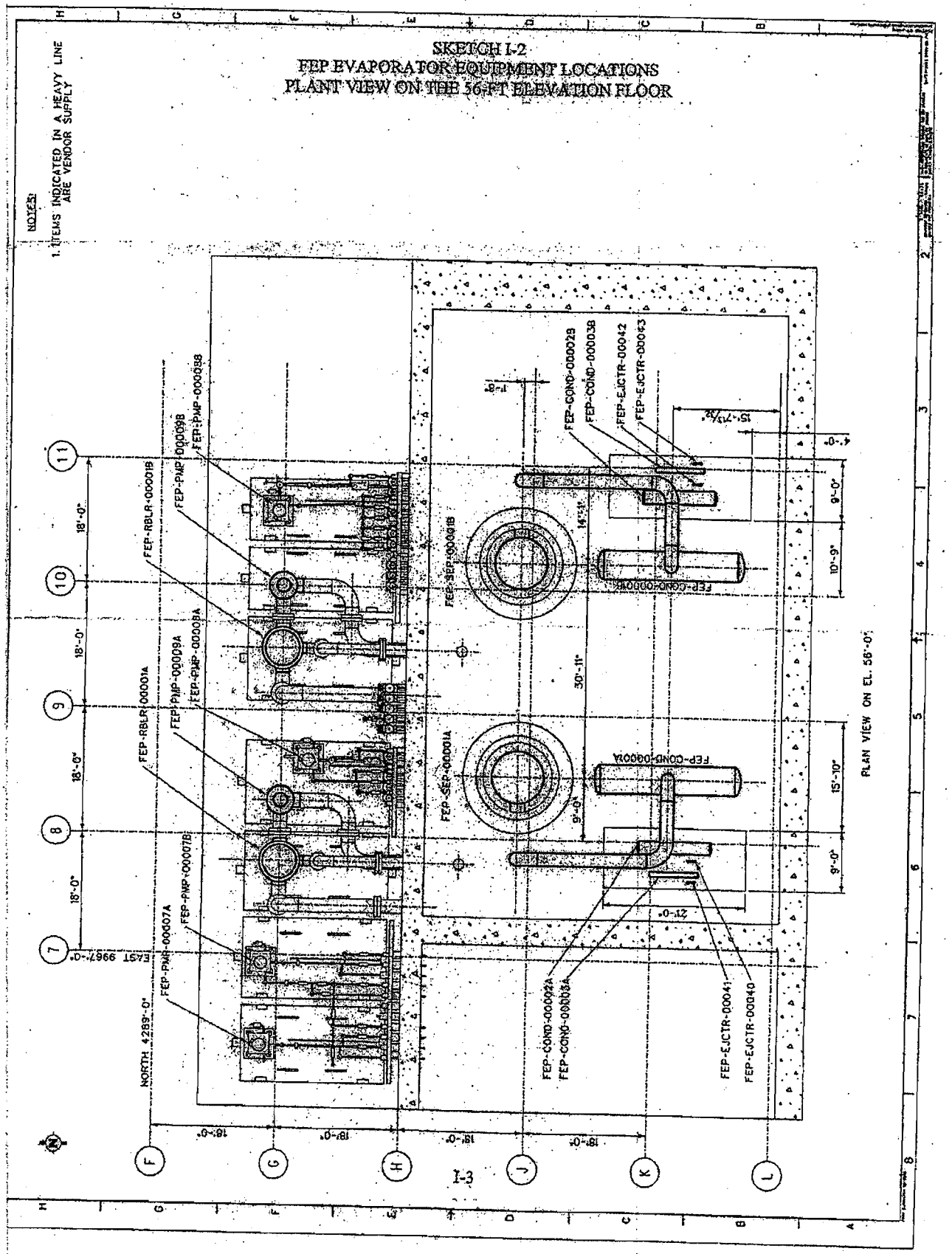
SKETCH I-2
FEP EVAPORATOR EQUIPMENT LOCATIONS
PLANT VIEW ON THE 56-FT ELEVATION FLOOR
NOTES:
1. ITEMS INDICATED IN A HEAVY LINE ARE VENDOR SUPPLY
FEP-RBLR-00001B
FEP-PMP-00009B
FEP-PMP-00008B
FEP-RBLR-00001A
FEP-PMP-00009A
FEP-PMP-00008A
FEP-PMP-00007B
FEP-PMP-00007A
FEP-SEP-00001B
FEP-SEP-00001A
FEP-COND-00002B
FEP-COND-00003B
FEP-EJCTR-00042
FEP-EJCTR-00043
FEP-COND-00001B
FEP-COND-00001A
FEP-COND-00002A
FEP-COND-00003A
FEP-EJCTR-00041
FEP-EJCTR-00040
NORTH 4289'-0"
EAST 9987'-0"
18'-0"
30'-11"
14'-11"
9'-0"
10'-9"
15'-10"
21'-0"
15'-7 1/2"
PLAN VIEW ON EL. 56'-0"

SKETCH I-3
ELEVATION VIEW LOOKING WEST
OF FEP EVAPORATOR EQUIPMENT LOCATIONS

NOTES:
1. ITEMS INDICATED IN A HEAVY LINE ARE VENDOR SUPPLY

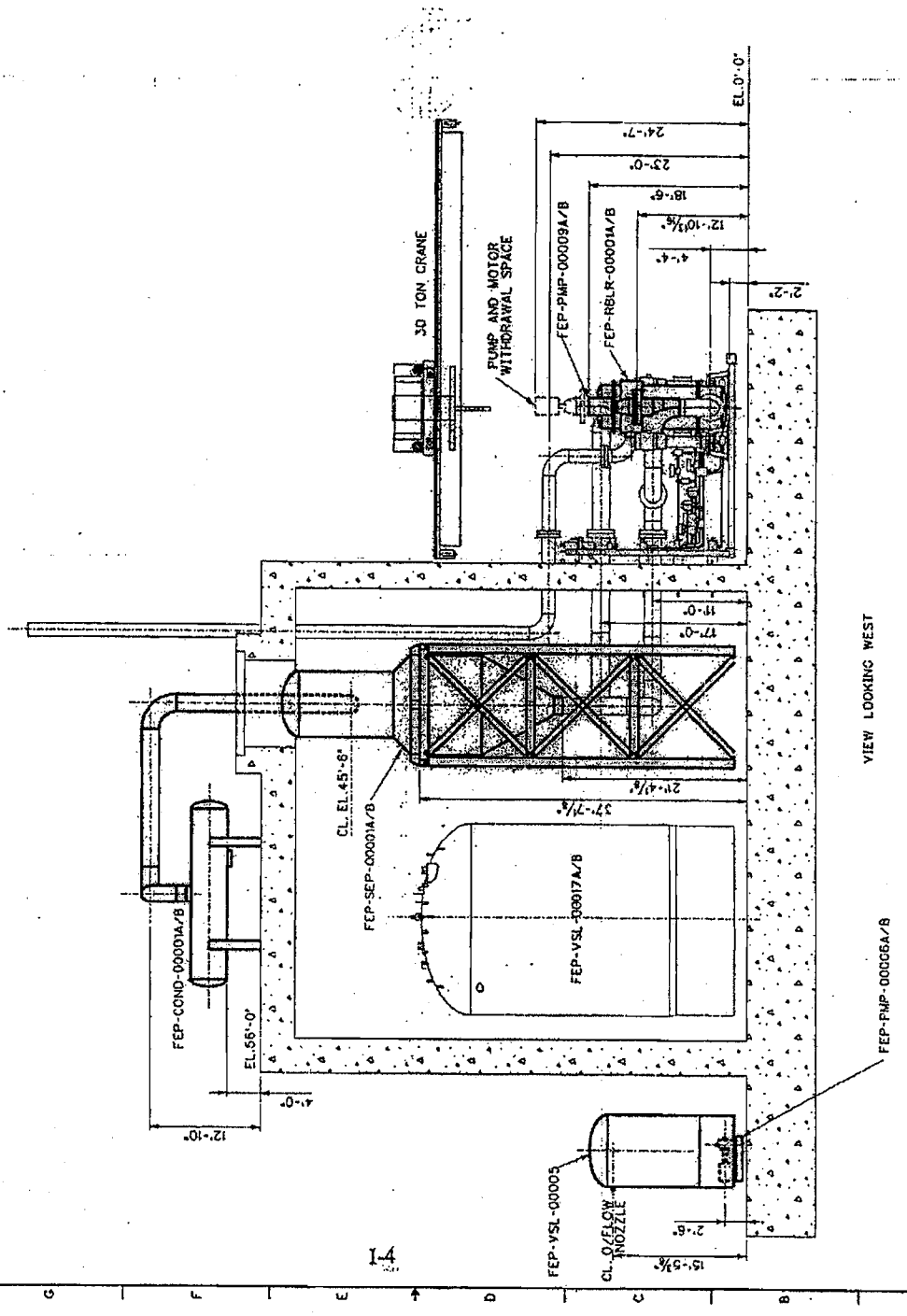

I-4

SKETCH I-4
ELEVATION VIEW LOOKING NORTH
OF FEP EVAPORATOR EQUIPMENT LOCATIONS

NOTES:
1. ITEMS INDICATED IN A HEAVY LINE ARE VENDOR SUPPLY

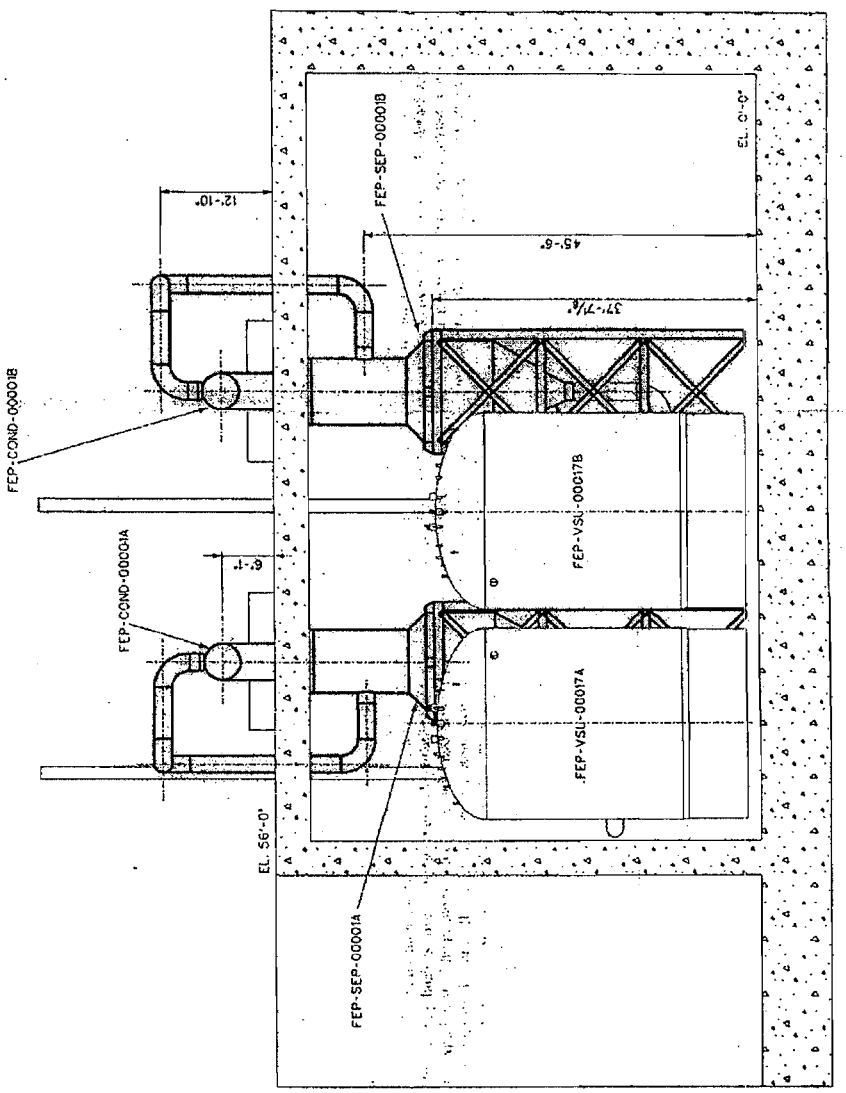

SKETCH I-5
ELEVATION VIEW LOOKING SOUTH
OF FEP EVAPORATOR EQUIPMENT LOCATIONS

NOTES:
1. ITEMS INDICATED IN A HEAVY LINE ARE VENDOR SUPPLY

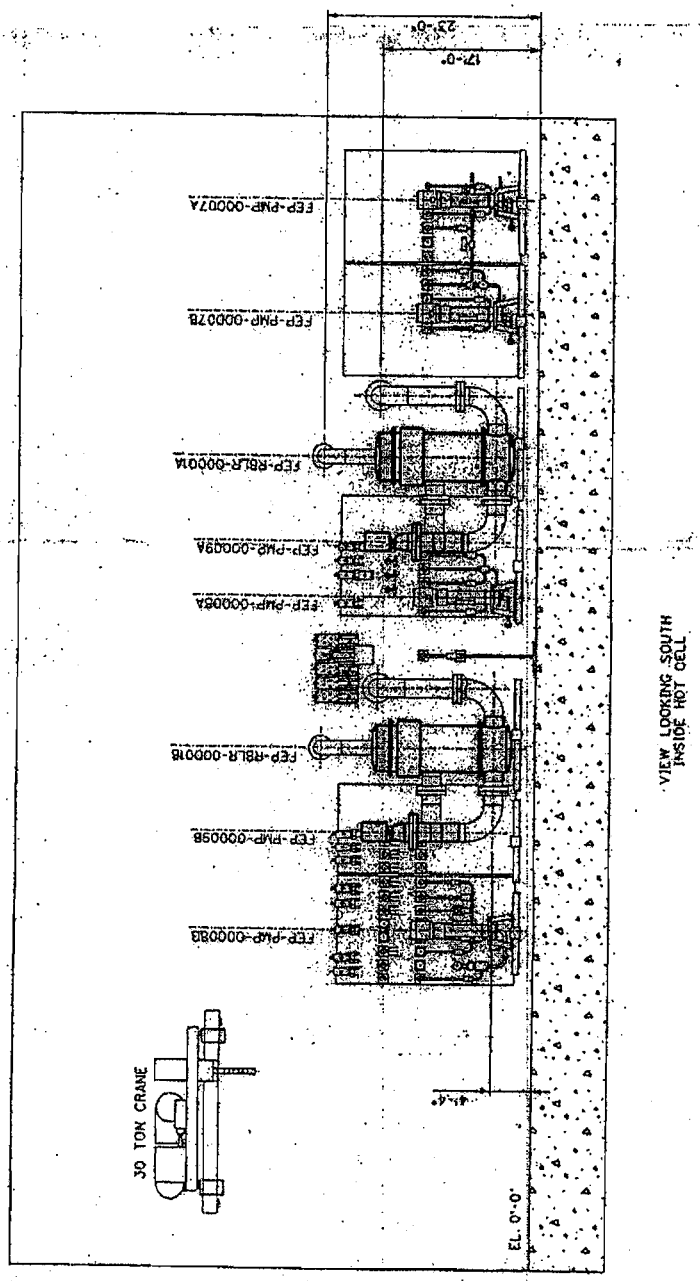

I-6

24590-G04B-F00019 Rev 4 (1/17/2006)

Ref: 24590-WTP-3DP-G04B-00049

SKETCH I-6
ISOMETRIC SKETCH FOR FEF EVAPORATOR FEED
FROM FEED VESSEL TO FEEP PUMP

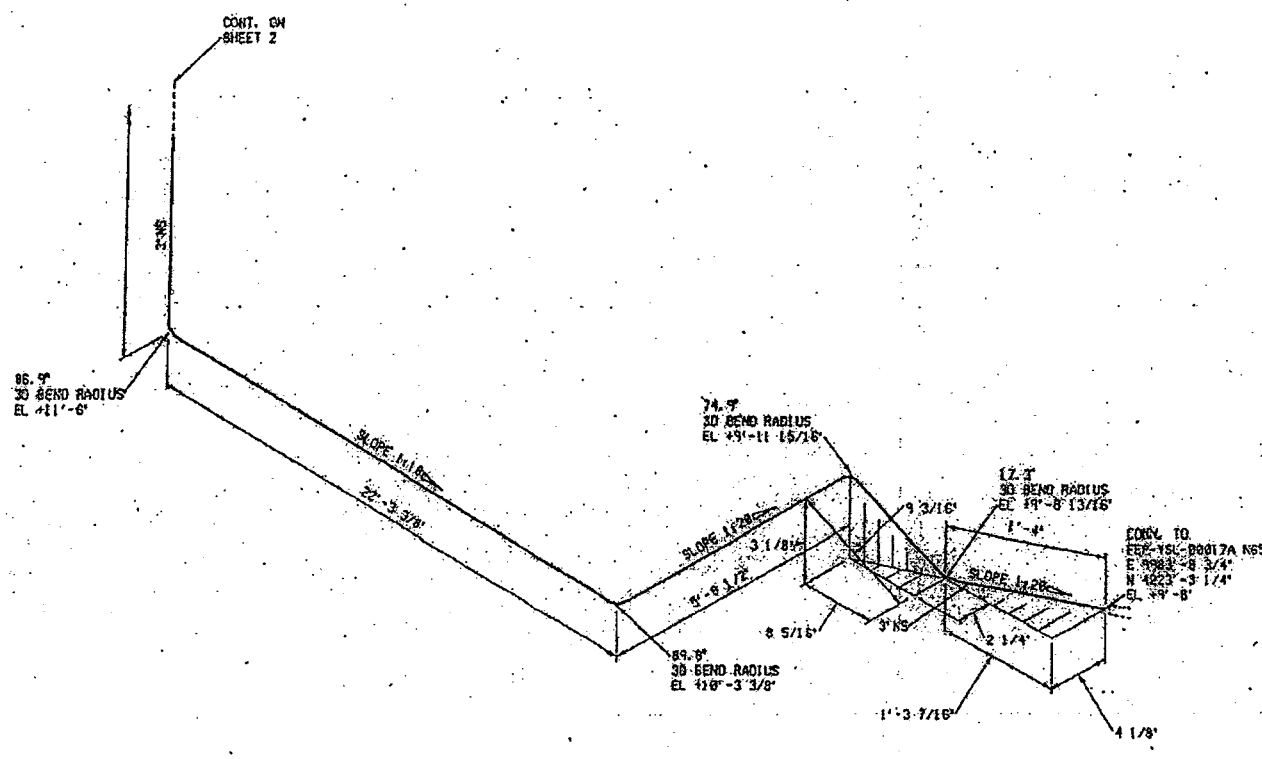

NOTES:

1. FOR GENERAL NOTES AND LEGEND SEE DWG. 24590-PTF-P3-P36T-00000.
2. SEE DWG. 24590-BOF-C2-C12T-00002 FOR CONVERSION FROM PTF FACILITY ELEVATIONS TO SITE ELEVATIONS. PTF FACILITY ELEVATION 0'-0" EQUALS SITE ELEVATION 678'-0" MSL.

SHOP MATERIALS

PART NO	COMPONENT DESCRIPTION	N.S. (INCHES)	QTY	BECHTEL STK CODE
	PIPE			
1	PIPE, A312TP316/316L, SMLS, SCH40S, BBE	3	28'-4"	PPFC0000GX02
2	PIPE, A312TP316/316L, SMLS, SCH40S, BBE	3	3'-7"	PPFC0000GT02

24590-PTF-3PS-MEVV-T0001, Rev. 2
Forced Circulation Vacuum Evaporator System

PRELIMINARY

REV	DATE	DESCRIPTION	DRN	CHKD	STRESS	RVWD	APVD

REVISION HISTORY

RIVER PROTECTION PROJECT
WASTE TREATMENT PLANT
2435 STEVENS CENTER PLACE
RICHLAND, WA 99352

CONTRACT No: DE-AC27-01RV14136

P&ID: NO DATA | CONST. WORK AREA:

PRETREATMENT FACILITY
ISOMETRIC

LINE No. FEP-PZ-00239-S12A-3 | PIPE SPEC: S12A

DWG No. | REV

CONTENT APPLICABLE TO ALARA? ☐ YES ☐ NO
ADR NO. REV.
QUALITY LEVEL | SEISMIC CAT.

I-7

FORM: ISOBRDR.DGN 02/2003 | COMPUTER GENERATED - MANUAL CHANGES NOT PERMITTED | PCF File: FEPP200239 | PLOTTED BY: gridlng | PLOT DATE: 03/22/2003 10:47:22 AM

SKETCH I-7
ISOMETRIC SKETCH FOR FEP EVAPORATOR FEED
FROM FEED VESSEL TO FEEP PUMP (Cont.)

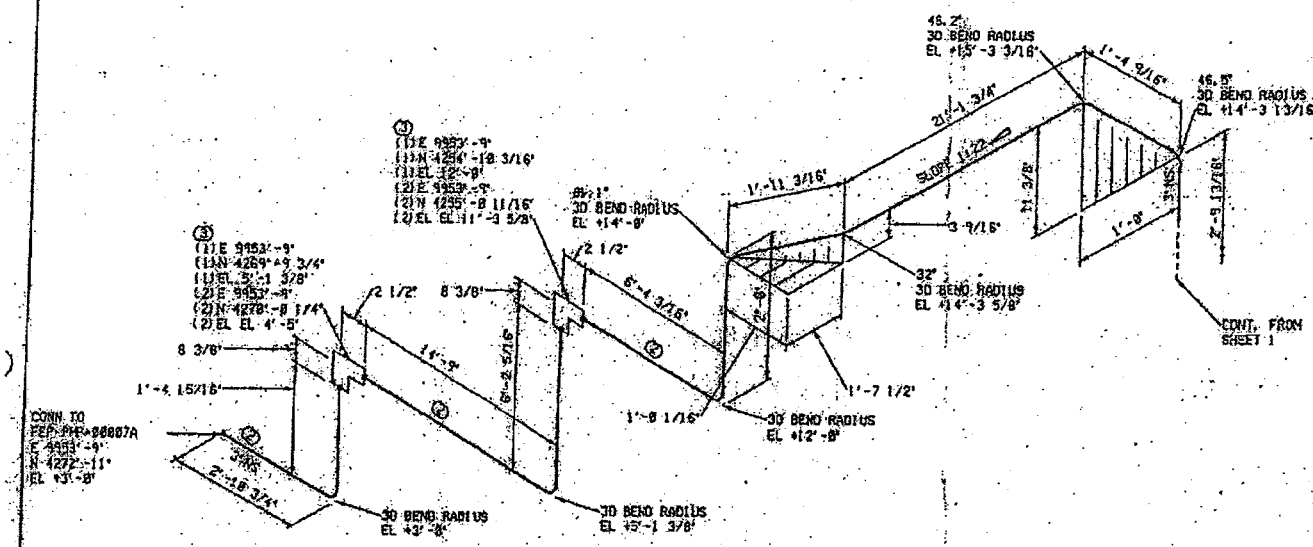

NOTES:

1. FOR GENERAL NOTES AND LEGEND SEE DWG. 24590-PTF-P3-P361-01000.
2. SEE DWG. 24590-BOF-C2-C12T-00002 FOR CONVERSION FROM PTF FACILITY ELEVATIONS TO SITE ELEVATIONS. PTF FACILITY ELEVATION 0'-0" EQUALS SITE ELEVATION 678'-0" MSL.

SHOP MATERIALS

PART NO	COMPONENT DESCRIPTION	N.S. (INCHES)	QTY	BECHTEL STK CODE
	PIPE			
1	PIPE, A312TP316/316L, SMLS, SCH40S, BBE	3	6'5"	PPFC0000X02
2	PIPE, A312TP316/316L, SMLS, SCH40S, BSE	3	50'11"	PPFC0000X02
	INSTRUMENTS			
3	PUREX	3	2	

24590-PTF-3PS-MEVV-T0001, Rev. 2
Forced Circulation Vacuum Evaporator System

PRELIMINARY

REV	DATE	DESCRIPTION	DRN	CHKD	STRESS	RVWD	APVD

REVISION HISTORY

RIVER PROTECTION PROJECT
WASTE TREATMENT PLANT
2435 STEVENS CENTER PLACE
RICHLAND, WA 99352

CONTRACT No: DE-AC27-01RV14136

P&ID: NO DATA | CONST. WORK AREA:

PRETREATMENT FACILITY
ISOMETRIC

LINE No. FEP-PZ-00239-S12A-3 | PIPE SPEC: S12A

DWG No. | REV 2

PLOTTED BY: gridling | PLOT DATE: 03/22/2003 10:50:55 AM

CONTENT APPLICABLE TO ALARA? ☐ YES ☐ NO
ADR NO. REV.
QUALITY LEVEL 4 | SEISMIC CAT. *

NDC-3C-00023 Rev.2

FORM ISOBRDR.DGN 02/2003 COMPUTER GENERATED - MANUAL CHANGES NOT PERMITTED PCF File: FEPP280239

24590-G04B-F00019 Rev 4 (1/17/2006)

Ref: 24590-WTP-3DP-G04B-00049

SKETCH I-8
ISOMETRIC SKETCH FOR FEP EVAPORATOR FEED
FROM FEED VESSEL TO FEEP PUMP (Cont.)

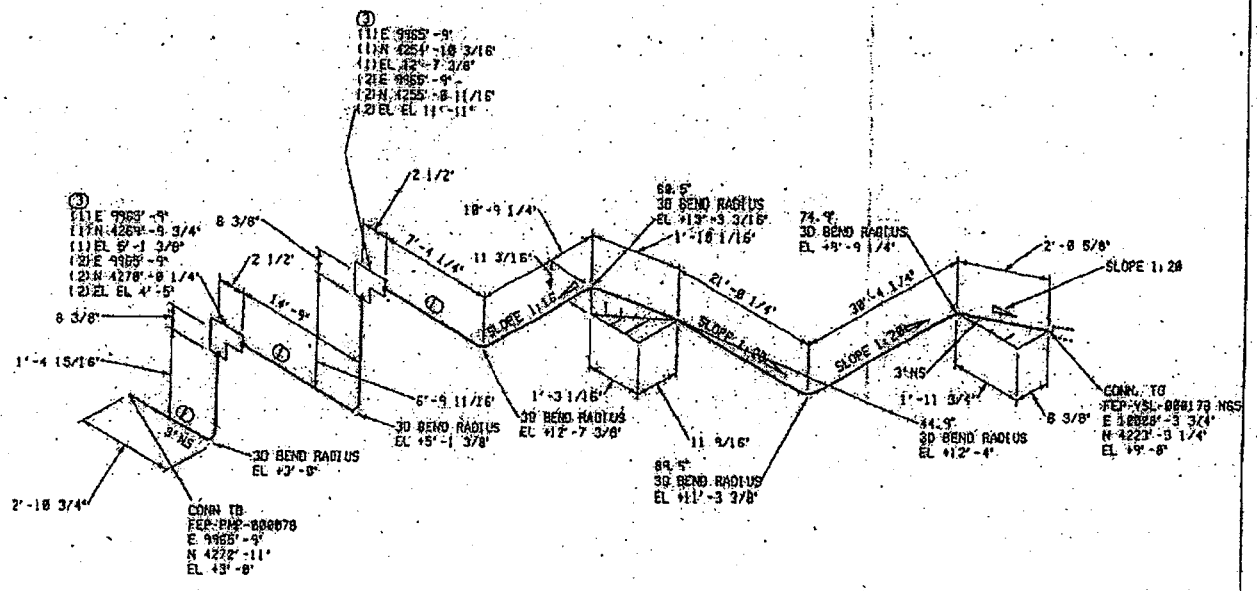

SHOP MATERIALS

PART NO	COMPONENT DESCRIPTION	N.S. (INCHES)	QTY	BECHTEL STK CODE
	PIPE			
1	PIPE, A312TP316/316L, SMLS, SCH40S, BBE	3	98'8"	PPPC000G0X01
2	PIPE, A312TP316/316L, SMLS, SCH40S, BBE	3	7'1"	PPPC000G0X02
	INSTRUMENTS			
3	PUREX	3	2	

24590-PTF-3PS-MEVV-T0001, Rev. 2
Forced Circulation Vacuum Evaporator System

PRELIMINARY

REV	DATE	DESCRIPTION	DRN	CHKD	STRESS	RVWD	APVD

REVISION HISTORY

RIVER PROTECTION PROJECT
WASTE TREATMENT PLANT
2435 STEVENS CENTER PLACE
RICHLAND, WA 99352

CONTRACT No: DE-AC27-01RV14136

P&ID: NO DATA | CONST. WORK AREA:

PRETREATMENT FACILITY
ISOMETRIC

LINE No. FEP-PZ-00009-S12A-3 | PIPE SPEC: S12A

DWG No. 1 | REV

NOTES:

1. FOR GENERAL NOTES AND LEGEND SEE DWG. 24590-PTF-P3-P36T-01000.
2. SEE DWG. 24590-BOF-C2-C12T-00002 FOR CONVERSION FROM PTF FACILITY ELEVATIONS TO SITE ELEVATIONS. PTF FACILITY ELEVATION 0'-0" EQUALS SITE ELEVATION 678'-0" MSL.

CONTENT APPLICABLE TO ALARA? YES NO
ADR NO. REV.
QUALITY LEVEL • SEISMIC CAT. •

FORM ISOBRDR.DGN 02/2003 COMPUTER GENERATED - MANUAL CHANGES NOT PERMITTED PCF File: FEPPZ00009 PLOTTED BY: grding PLOT DATE: 03/22/2003 10:53:46 AM

SKETCH 1-9
HOT CELL WALL PENETRATION LOCATION
SKETCH FOR FEP EVAPORATOR FEED

NOTES:

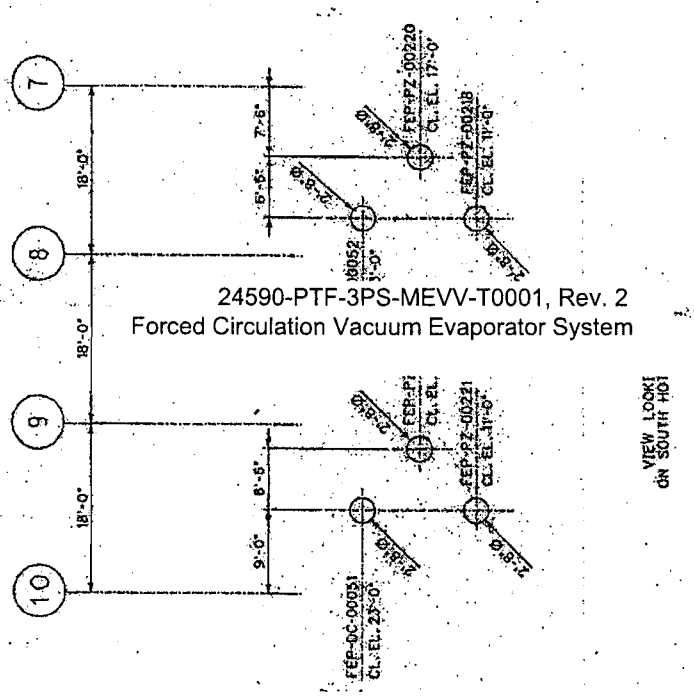

24590-PTF-3PS-MEVV-T0001, Rev. 2
Forced Circulation Vacuum Evaporator System

APPENDIX J

TLP EVAPORATOR EQUIPMENT SKIDS LOCATION AND LAYOUT SKETCHES

SKETCH J-1
TLP EVAPORATOR EQUIPMENT LOCATIONS
PLANT VIEW ON THE 0-FT ELEVATION FLOOR

NOTES:
1. ITEMS INDICATED IN A HEAVY LINE ARE VENDOR SUPPLY

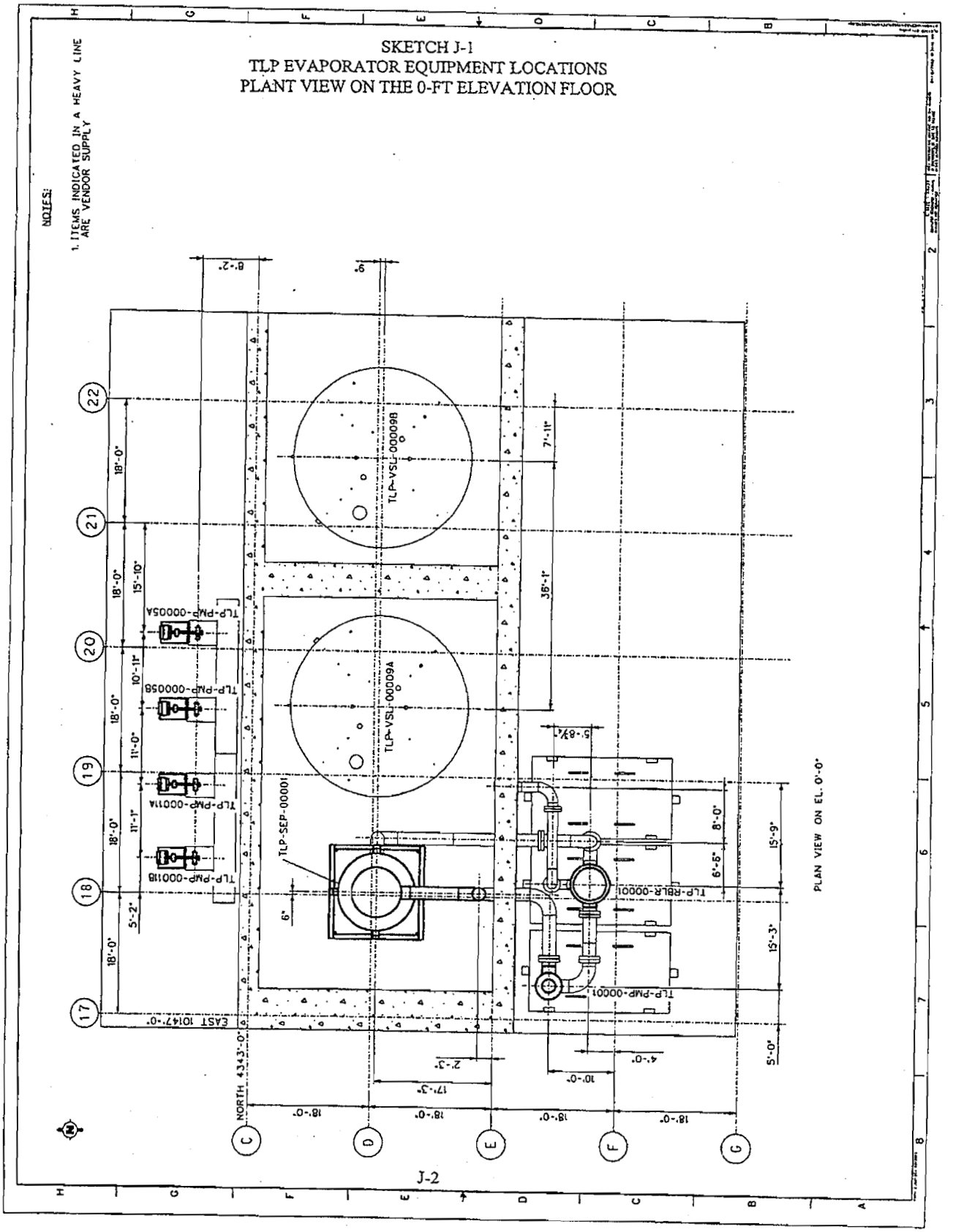

SKETCH J-2
TLP EVAPORATOR EQUIPMENT LOCATIONS
PLANT VIEW ON THE 56-FT ELEVATION FLOOR

NOTES:
1. ITEMS INDICATED IN A HEAVY LINE ARE VENDOR SUPPLY

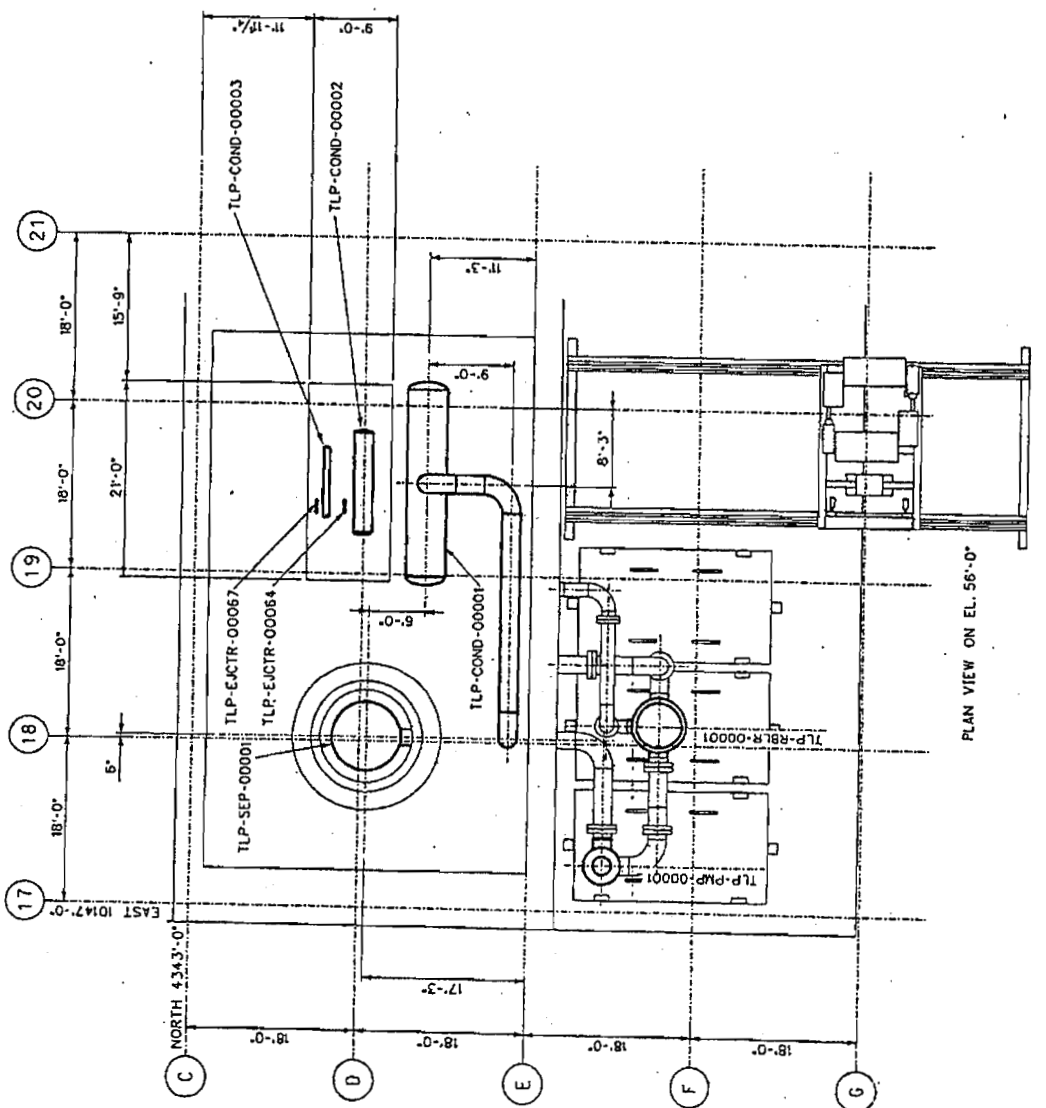

J-3

SKETCH J-3
ELEVATION VIEW LOOKING EAST
OF TLP EVAPORATOR EQUIPMENT LOCATIONS

NOTES:
1. ITEMS INDICATED IN A HEAVY LINE ARE VENDOR SUPPLY

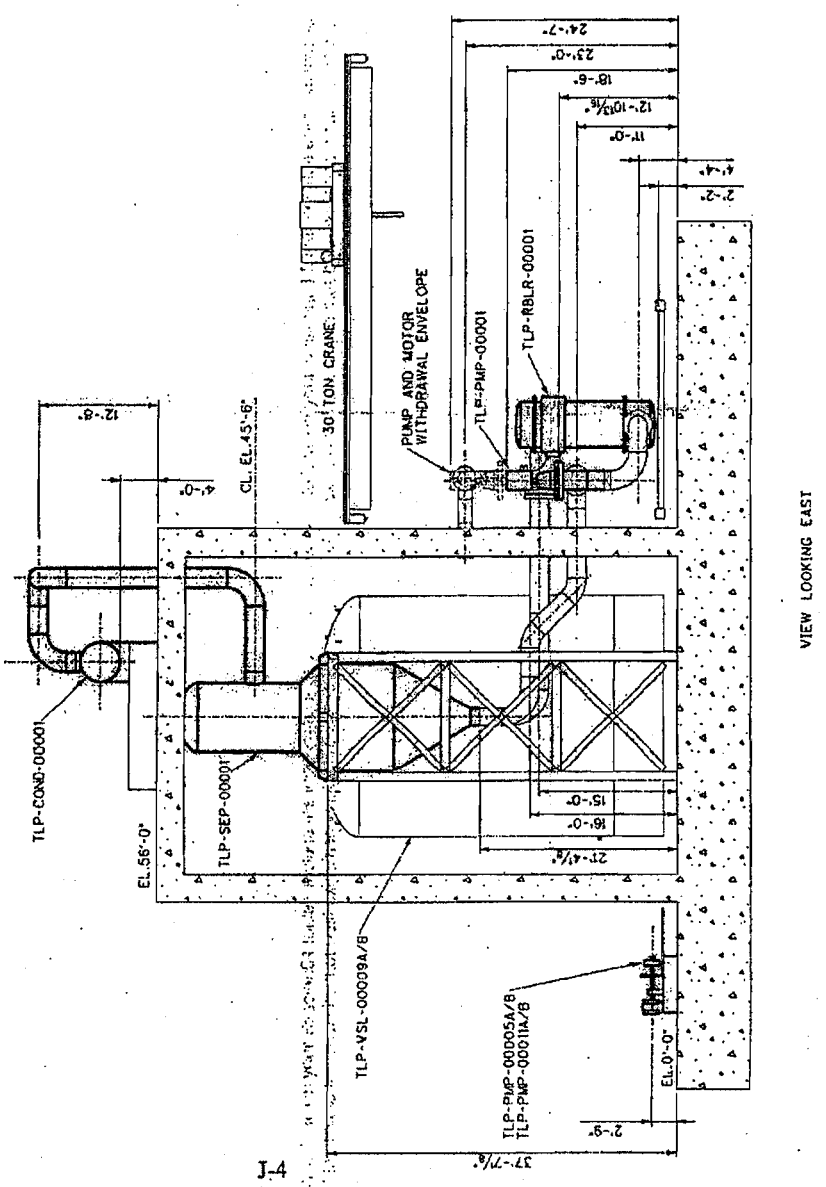

NOTES:
1. ITEMS INDICATED IN A HEAVY LINE ARE VENDOR SUPPLY.

SKETCH J-4
ELEVATION VIEW LOOKING NORTH
OF TLP EVAPORATOR EQUIPMENT LOCATIONS

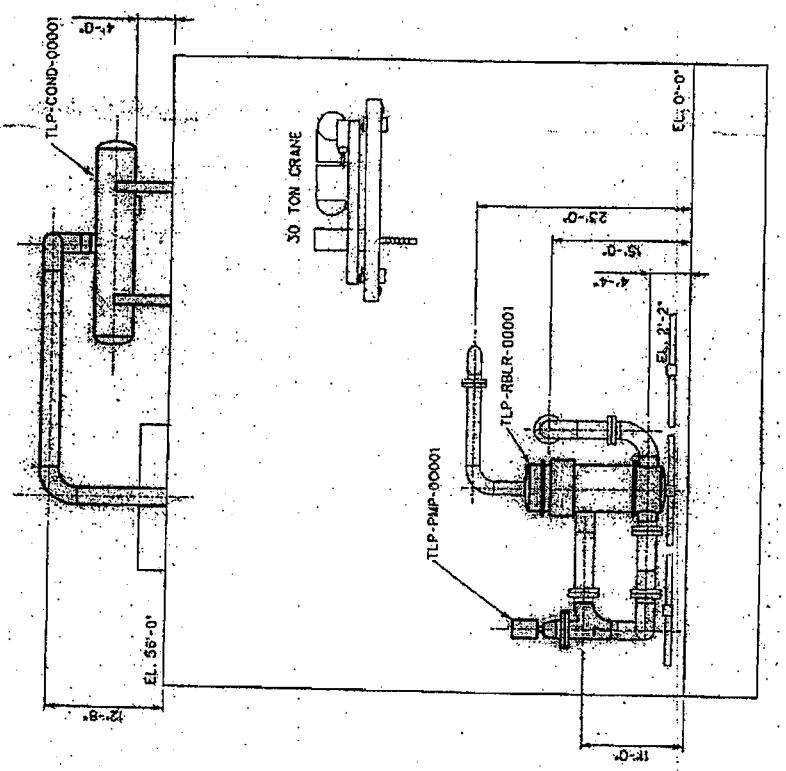

SKETCH J-5
ELEVATION VIEW LOOKING SOUTH
OF TLP EVAPORATOR EQUIPMENT LOCATIONS

NOTES:
1. ITEMS INDICATED IN A HEAVY LINE ARE VENDOR SUPPLY

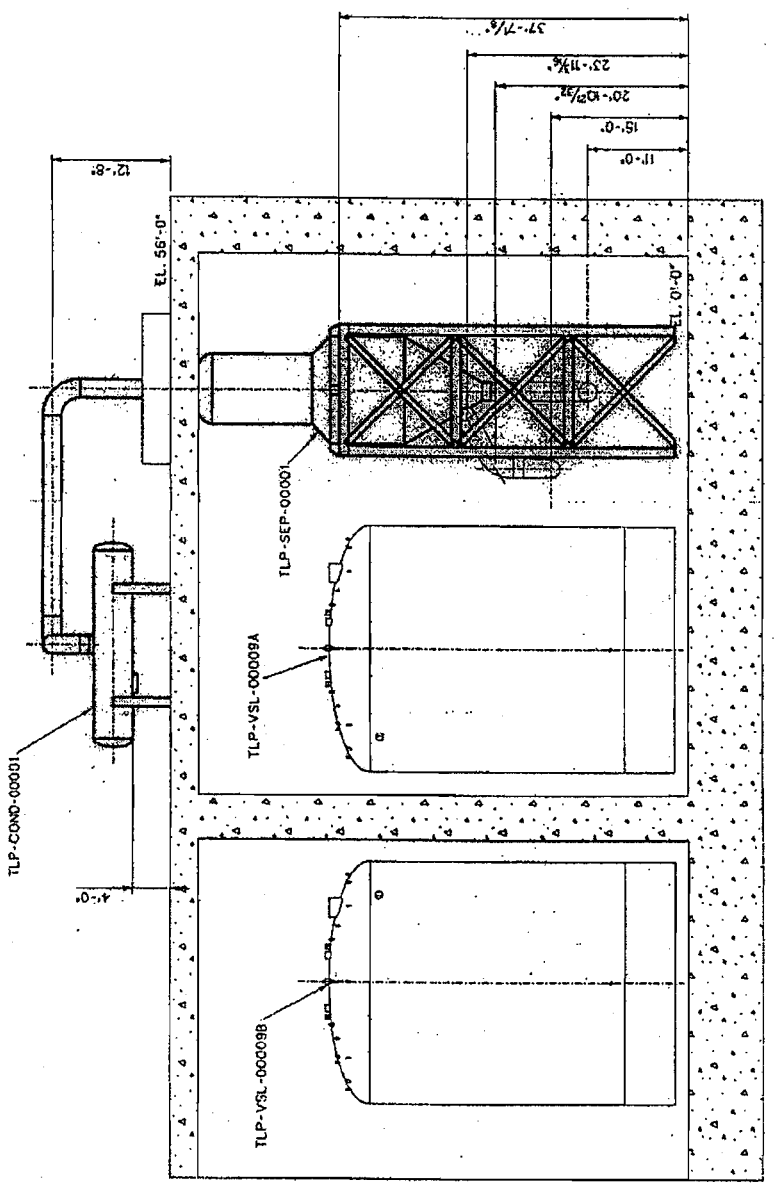

VIEW LOOKING SOUTH
INSIDE BLACK CELL

SKETCH J-6
PLANT VIEW ON THE 0-FT ELEVATION
OF TLP CONDENSATE EQUIPMENT LOCATIONS

NOTES:
1. ITEMS INDICATED IN A HEAVY LINE ARE VENDOR SUPPLY

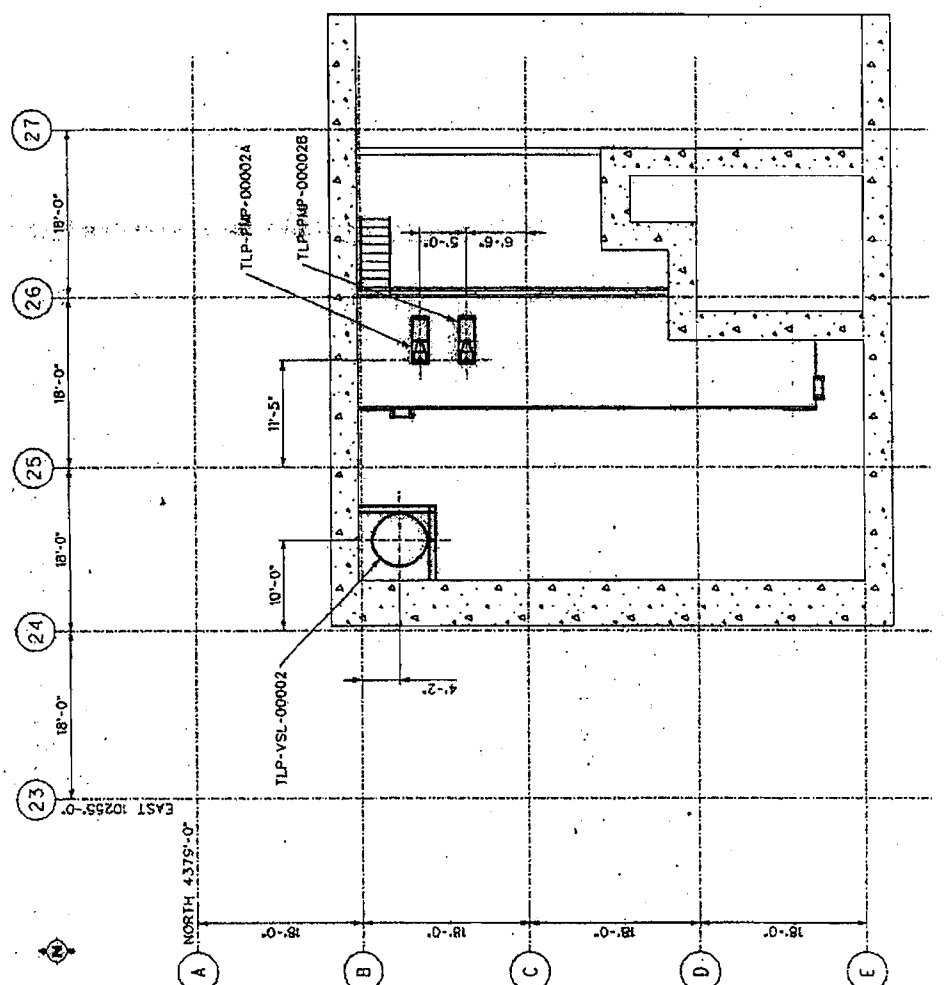

NOTES:

1. ITEMS INDICATED IN A HEAVY LINE ARE VENDOR SUPPLY

SKETCH J-7
ELEVATION VIEW LOOKING NORTH
OF TLP CONDENSATE EQUIPMENT LOCATIONS

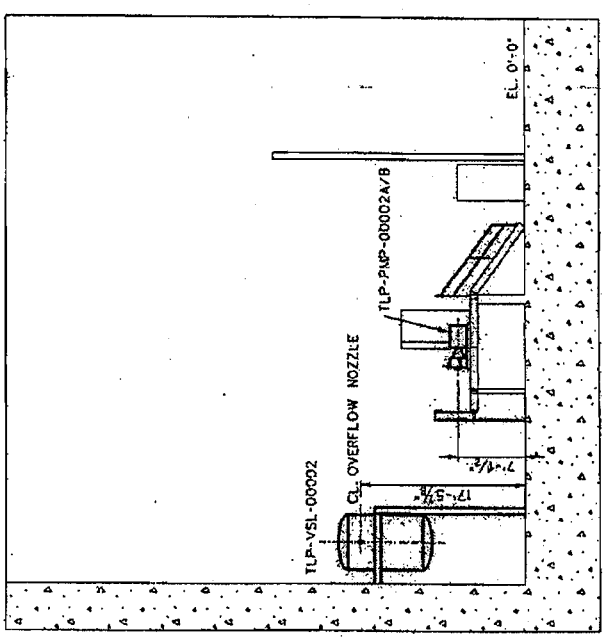

VIEW LOOKING NORTH

24590-G04B-F00019 Rev 4 (1/17/2006)

Ref. 24590-WTP-3DP-G04B-00049

N

SKETCH 1-8
ISOMETRIC SKETCH FOR TLP EVAPORATOR FEED
FROM FEED VESSEL TO FEED PUMP

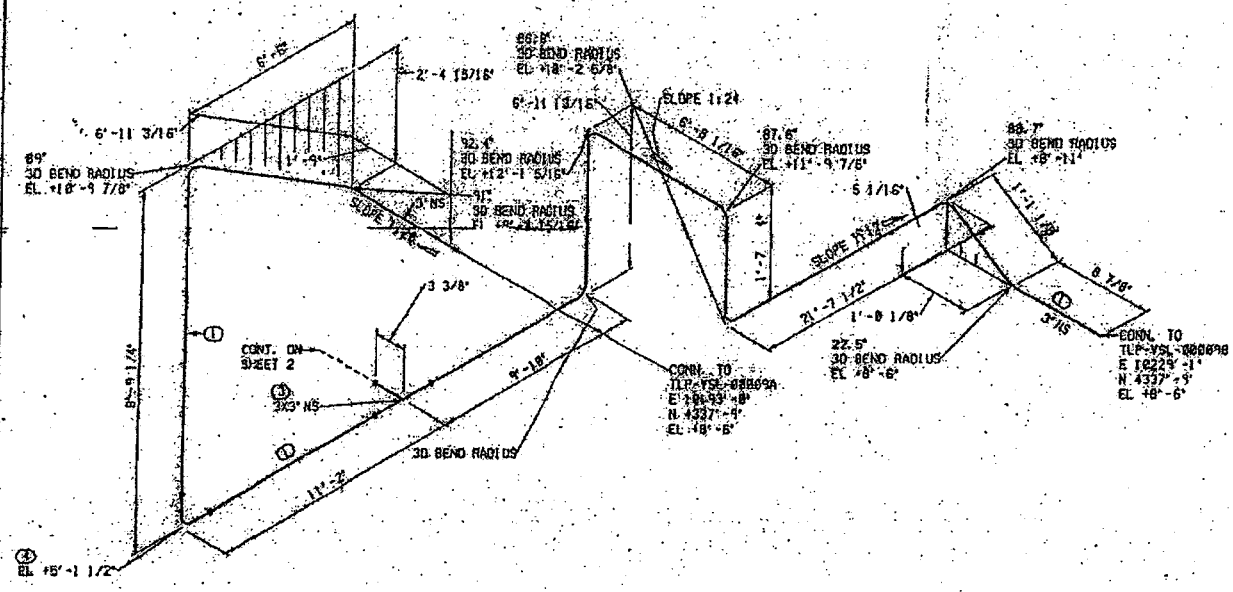

NOTES:

1. FOR GENERAL NOTES AND LEGEND SEE DWG. 24590-PTF-P3-P301-00000.
2. SEE DWG. 24590-BOF-C2-C121-00002 FOR CONVERSION FROM PTF FACILITY ELEVATIONS TO SITE ELEVATIONS. PTF FACILITY ELEVATION 0'-0" EQUALS SITE ELEVATION 678'-0" MSL.

SHOP MATERIALS

PART NO	COMPONENT DESCRIPTION	N.S. (INCHES)	QTY	BECHTEL STK CODE
	PIPE			
1	PIPE, A312TP316/316L, SMLS, SCH40S, BBE	3	6'-1"	PPPC0B0G0X02
2	PIPE, A312TP316/316L, SMLS, SCH40S, BBE	3	8'-6"	PPPC0B0G0X02
	FITTINGS			
3	TE, BW, A403WP316+, SCH40S	3X3	1	FFCTV0G0C0G
4	EE - 90, ER, BW, A403WP316/316L-S, SCH40S	3	1	FFCNV0G0L0G

24590-PTF-3PS-MEVV-T0001, Rev. 2
Forced Circulation Vacuum Evaporator System

PRELIMINARY

REV	DATE	DESCRIPTION	DRN	CHKD	STRESS	APVD	APVD

REVISION HISTORY

RIVER PROTECTION PROJECT
WASTE TREATMENT PLANT
2435 STEVENS CENTER PLACE
RICHLAND, WA 99352

CONTRACT No: DE-AC27-01RV14136

P&ID: 24590-PTF-M5-TLP-00001 | CONST. WORK AREA:

PRETREATMENT FACILITY
ISOMETRIC

LINE No. | PIPE SPEC: S12C

DWG No. 1 | REV

CONTENT APPLICABLE TO ALARA? ☐ YES ☐ NO

ADR NO. | REV.

QUALITY LEVEL: QL-2 | SEISMIC CAT.: SC-II

J-9

FORM: ISOBRDR.DGN 02/2003 | COMPUTER GENERATED - MANUAL CHANGES NOT PERMITTED | PCF File: TLPSUCTION | PLOTTED BY: grinkig | PLOT DATE: 03/24/2003 11:41:27 AM

d:\24590\isometrics\NDG_Isometrics.DGN

24590-G04B-F00019 Rev 4 (1/17/2006)

Ref: 24590-WTP-3DP-G04B-00049

N

SKETCH 7-9
ISOMETRIC SKETCH FOR TLP EVAPORATOR FEED
FROM FEED VESSEL TO FEEP PUMP (Cont.)

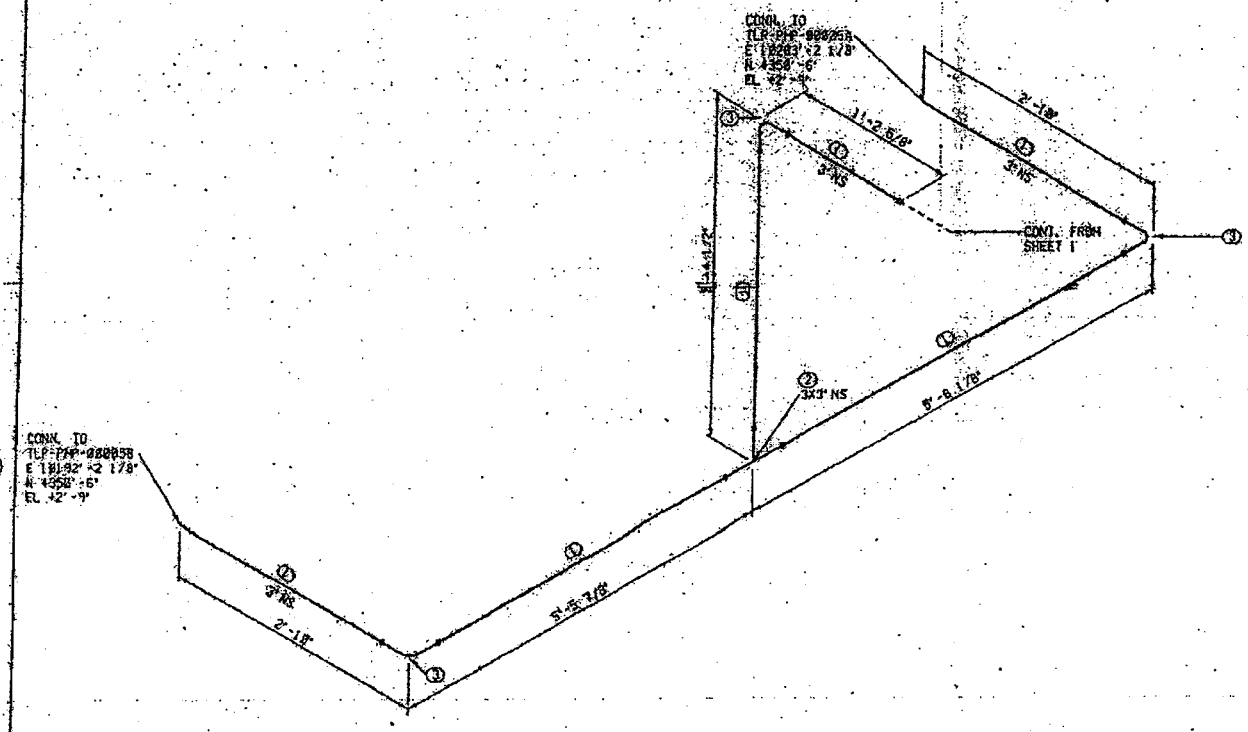

NOTES:

1. FOR GENERAL NOTES AND LEGEND SEE DWG. 24590-PTF-P3-P367-D1000.
2. SEE DWG. 24590-BOF-C2-0127-D0002 FOR CONVERSION FROM PTF FACILITY ELEVATIONS TO SITE ELEVATIONS. PTF FACILITY ELEVATION 0'-0" EQUALS SITE ELEVATION 678'-0" MSL.

SHOP MATERIALS

PART NO	COMPONENT DESCRIPTION	N.S. (INCHES)	QTY	RECEIVED STK CODE
	PIPE			
1	PIPE, A312TP316/316L, SH,S, SCH40S, BSE	3	17' 2"	PPPC080D0X02
	FITTINGS			
2	TEE, BW, A403WP316, SCH40S	3X3	1	PFCTY080D1C00
3	EL - 90, LR, BW, A403WP316/316L-S, SCH40S	3	3	PFONY080L60G

24590-PTF-3PS-MEVV-T0001, Rev. 2
Forced Circulation Vacuum Evaporator System

PRELIMINARY

REV	DATE	DESCRIPTION	DRN	CHKD	STRESS	RVWD	APVD

REVISION HISTORY

RIVER PROTECTION PROJECT
WASTE TREATMENT PLANT
2435 STEVENS CENTER PLACE
RICHLAND, WA 99352

CONTRACT No: DE-AC27-01RV14136

PROJ: 24590-PTF-MC-TLP-00001 | CONST. WORK AREA:

PRETREATMENT FACILITY
ISOMETRIC

LINE No. | PIPE SPEC: S12C

DWG No. 2 | REV

CONTENT APPLICABLE TO ALARA? ☐ YES ☐ NO
ADR NO. | REV.
QUALITY LEVEL: QL-2 | SEISMIC CAT.: SC-II

J-10

FORM: ISOBRDR.DGN 02/2003 | COMPUTER GENERATED - MANUAL CHANGES NOT PERMITTED | PCF File: TLPSUCTION | PLOTTED BY: gridino | PLOT DATE: 03/24/2003, 11:37:20 AM

SKETCH J-10
HOT CELL WALL PENETRATION LOCATION
SKETCH FOR TLP EVAPORATOR FEED

NOTES:

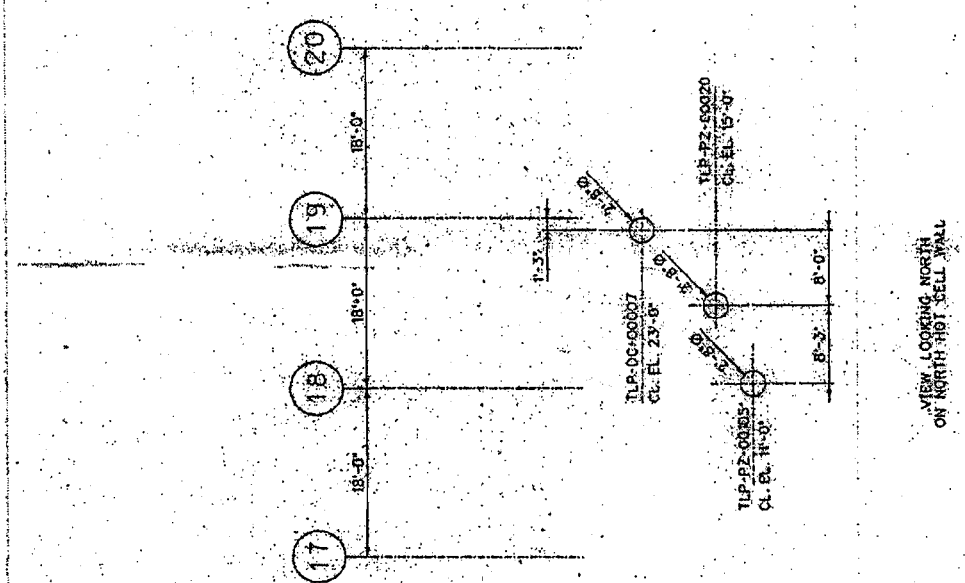

APPENDIX K

ANTIFOAM EQUIPMENT SKIDS LOCATION AND LAYOUT SKETCHES

SKETCH K-1
ANTIFOAM EQUIPMENT LOCATIONS
PLANT VIEW ON THE 77-FT ELEVATION FLOOR

NOTES:
1. ITEMS INDICATED IN A HEAVY LINE ARE VENDOR SUPPLY.

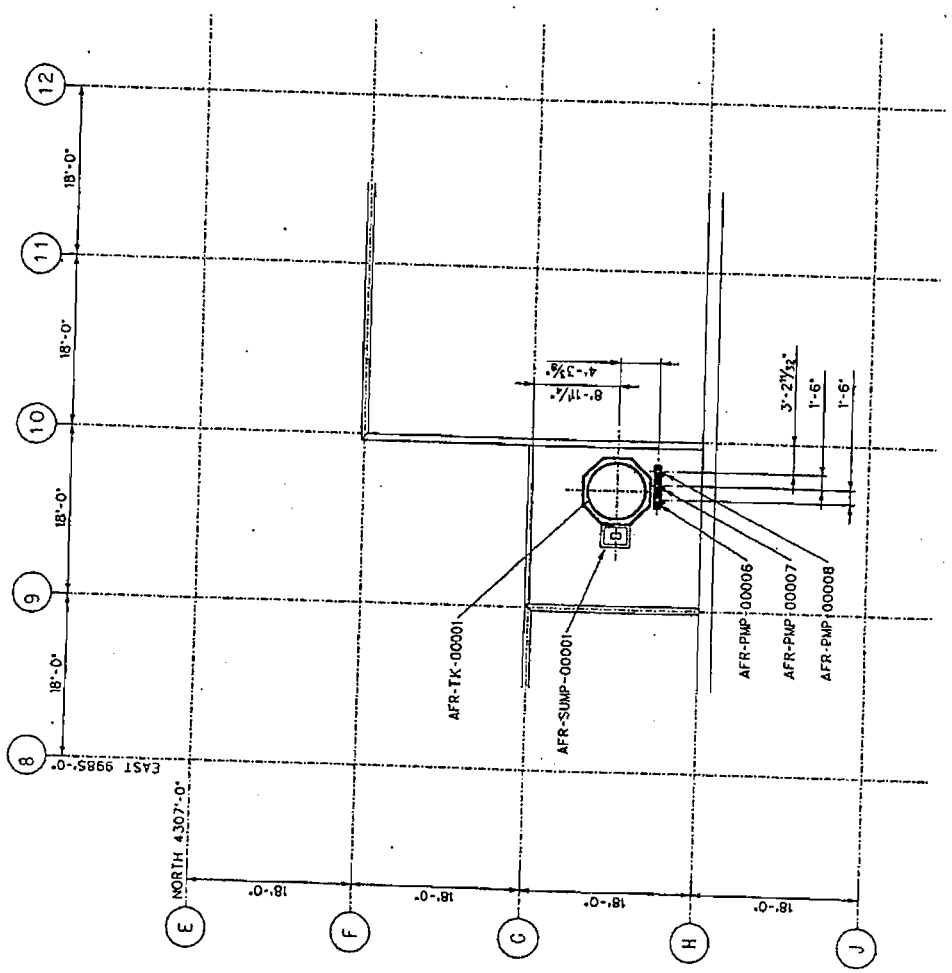

SKETCH K-2
ELEVATION VIEW LOOKING EAST
OF ANTIFOAM EQUIPMENT LOCATIONS

NOTES:
1. ITEMS INDICATED IN A HEAVY LINE ARE VENDOR SUPPLY.

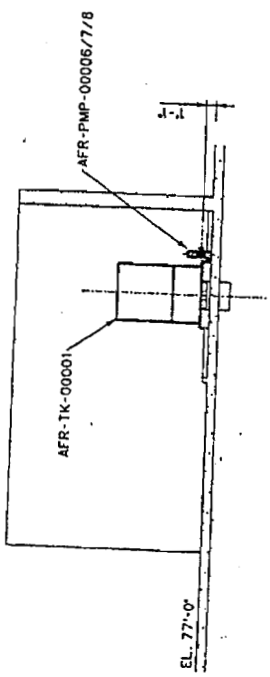

VIEW LOOKING EAST

APPENDIX L

Reboiler Steam Condensate Transfer Stations Location and Layout Sketches

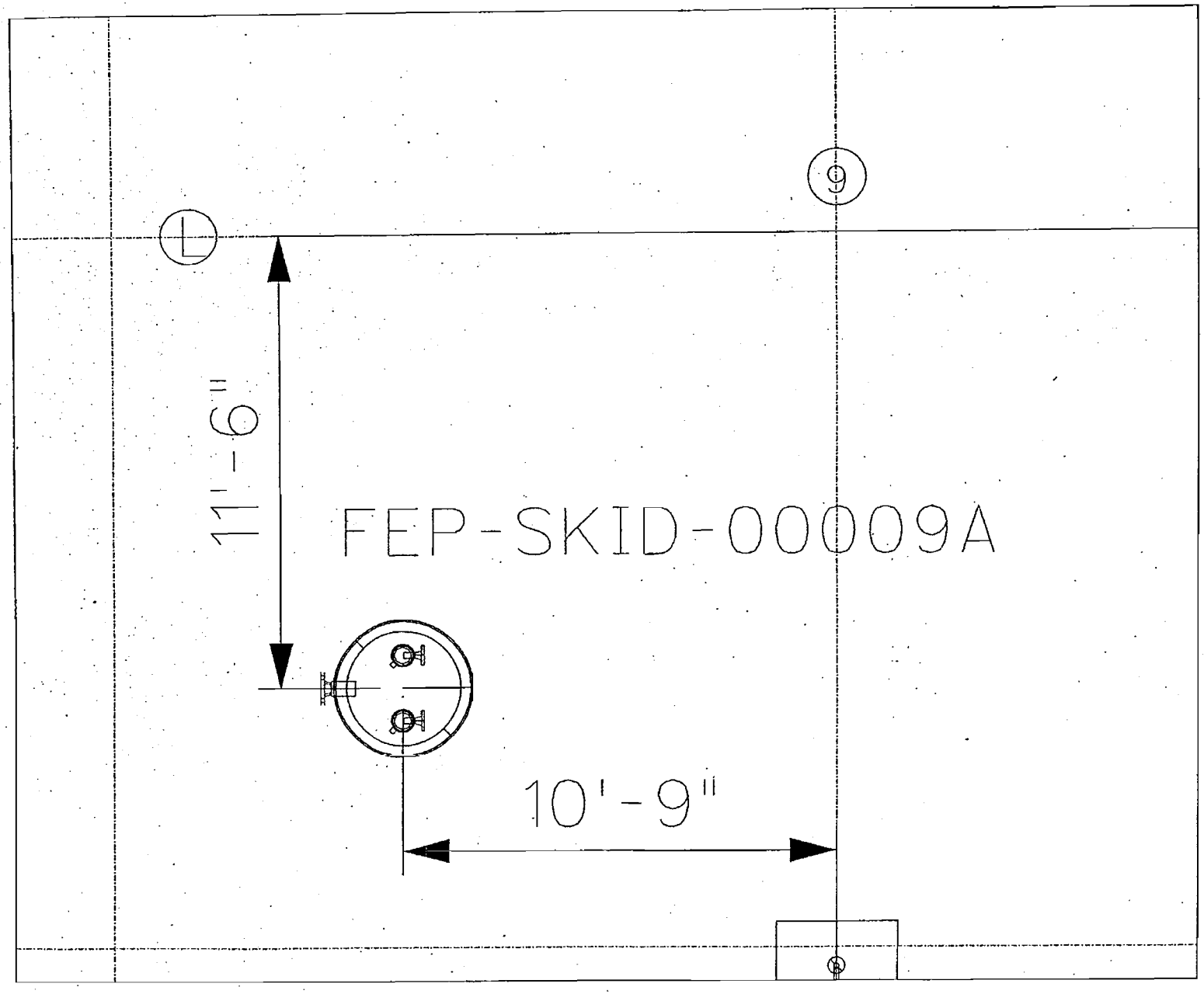

PLAN VIEW
@ 0'-0" Elevation

SKETCH L-2

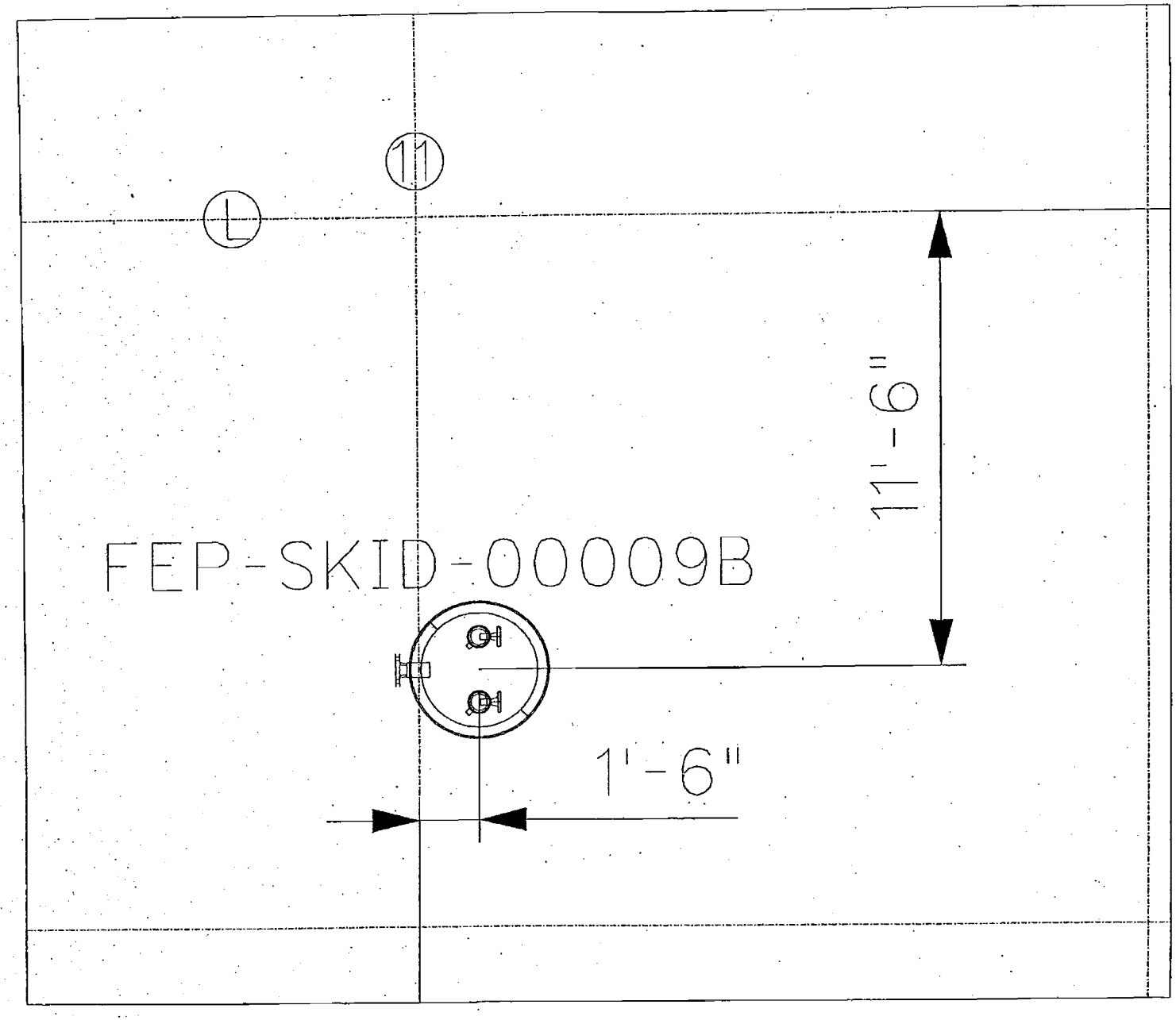

PLAN VIEW
@ 0'-0" Elevation

SKETCH L-3

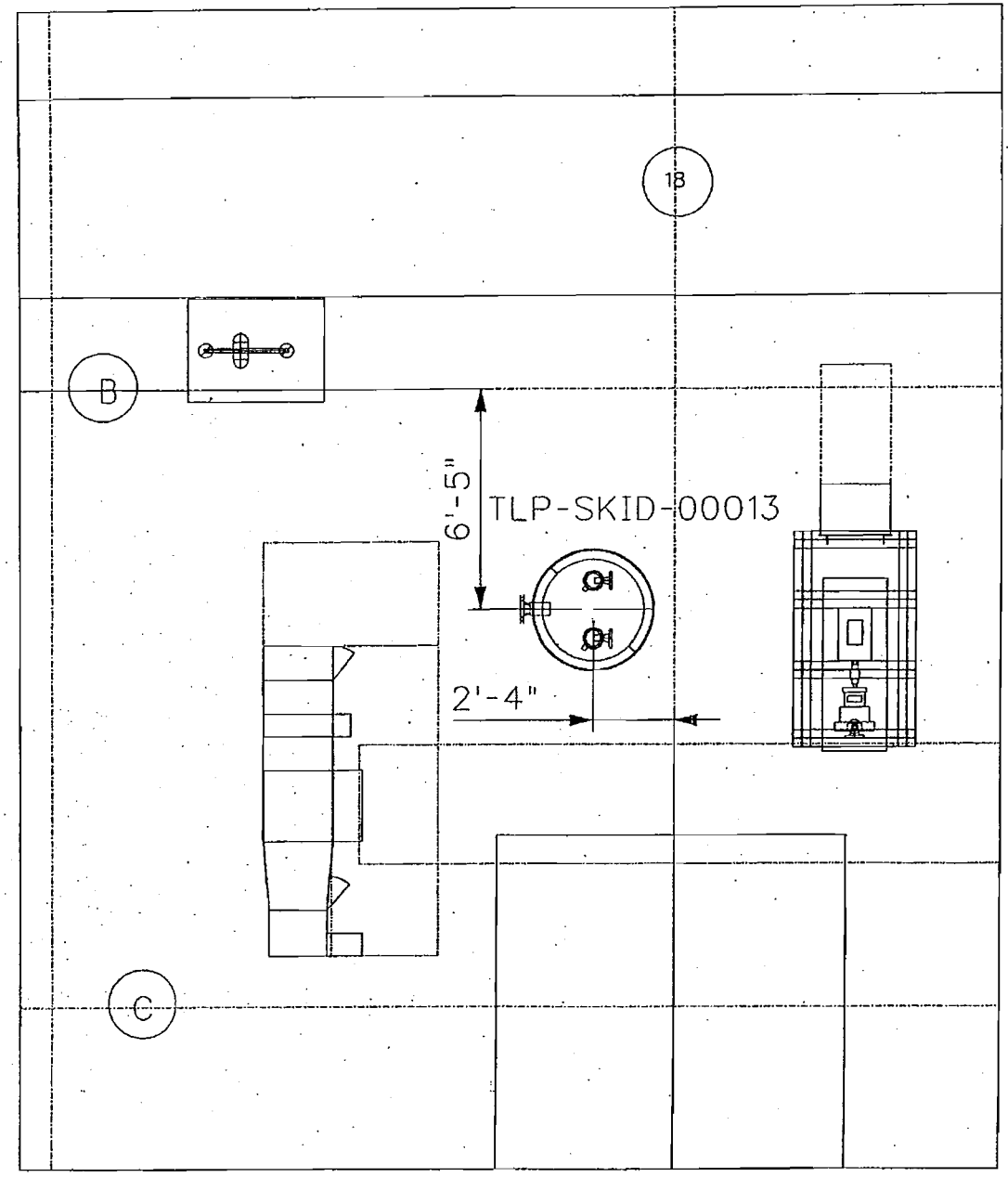

PLAN VIEW
@ 0'-0" Elevation

Sketch L-4
Location of 2”-150# R.F FLG inlet nozzle
on Roth Vessel FEP-VSL-00021 for DSH drain

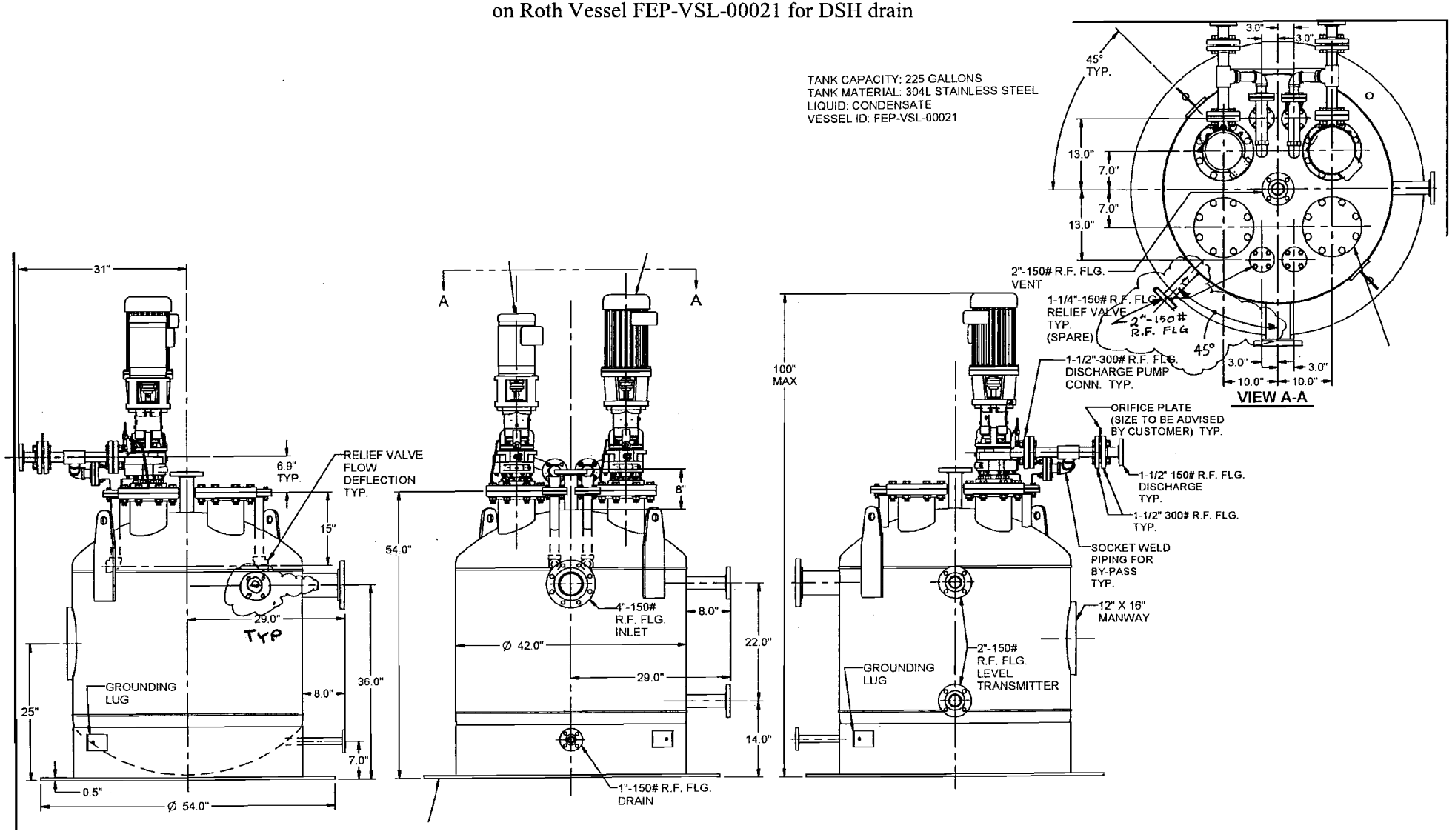

Sketch L-5
Location of 2"-150# R.F FLG inlet nozzle
on Roth Vessel FEP-VSL-00022 for DSH drain

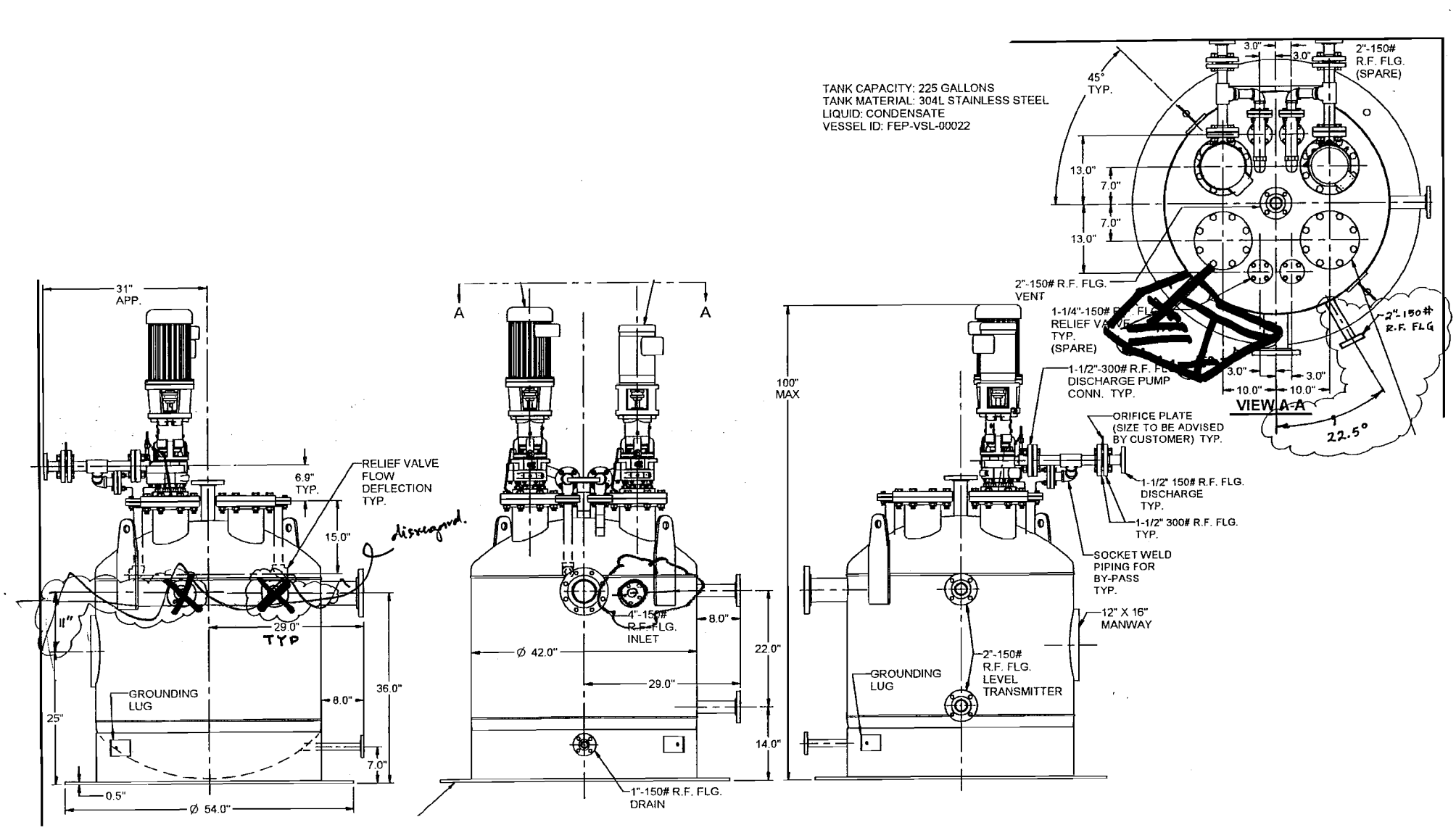

Sketch L-6
Location of 2"-150# R.F FLG inlet nozzle
on Roth Vessel TLP-VSL-00047 for DSH drain

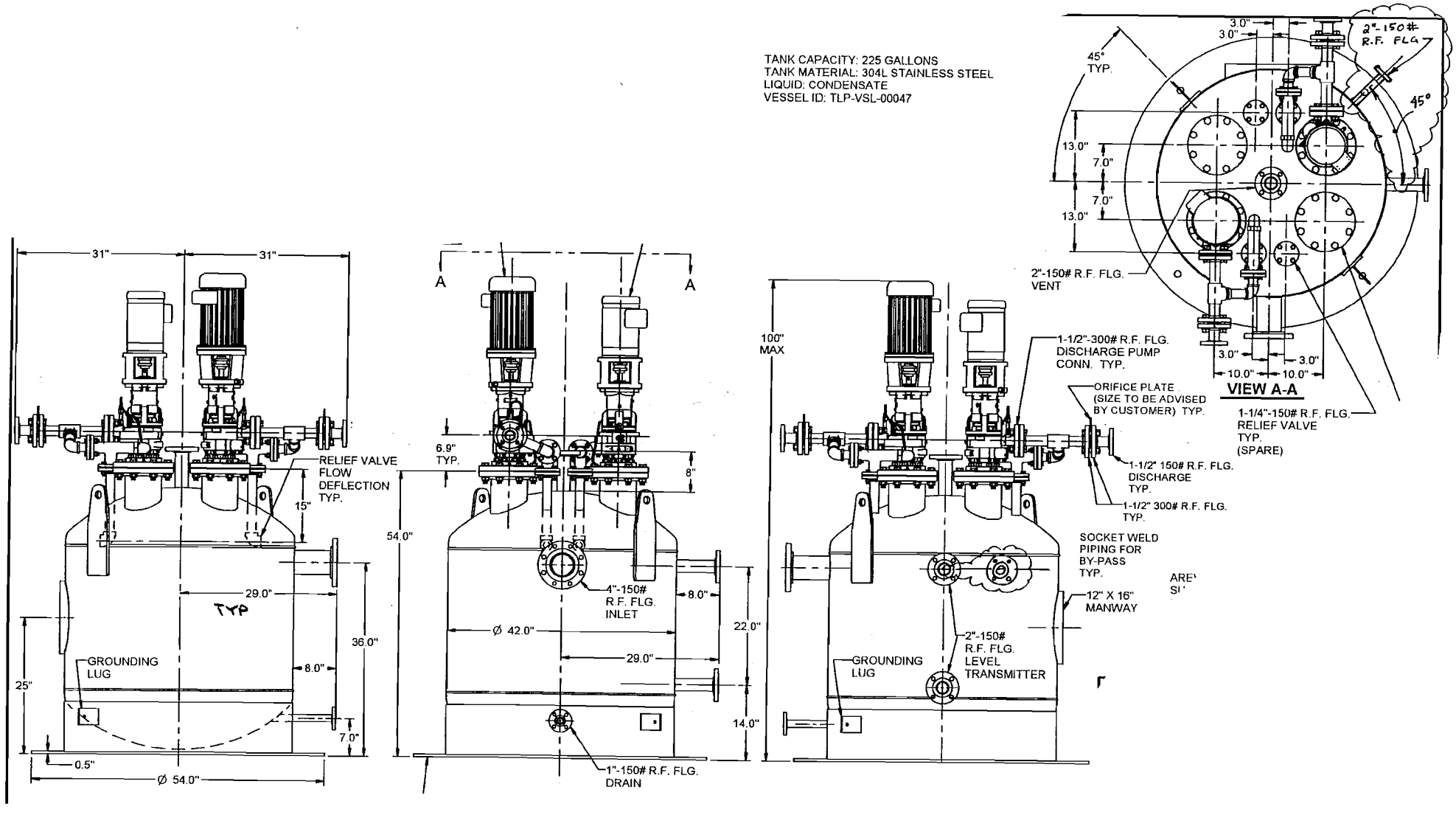

APPENDIX M

DELETED

APPENDIX N

DELETED

APPENDIX O

Nondestructive Examination (NDE) of Fabricated Pipe Welds

Non-Destructive Examination (NDE) of Fabricated Pipe Welds

ASME B31.3 Process Piping							
Type of Weld	Cat. D	Normal Fluid Service Less than Class 1500	Normal Fluid Service Class 1500 and Greater	Cat. M Black Cells	Cat. M Dual Containment Pipe		Cat. M All Others
					Inner Pipe	Jacket	
Girth and Miter Welds	100 % VT	100 % VT 5 % RT	100 % VT 100 % RT	100 % VT & RT (1)	100 % VT & RT (1)	100 % VT 5 % RT (3)	100 % VT 20 % PT/MT
Branch Connection Welds and Fillet Welds including Socket and Attachment Welds for Branch Reinforcement and Support Welds	100 % VT	100 % VT	100 % VT	100 % PT/MT (2)	100 % PT/MT (2)	100 % VT	100 % VT 20 % PT/MT

NOTES:

1. The radiographic acceptance criteria for normal fluid service applies except that incomplete penetration and undercut are not permitted.
2. The penetrant and magnetic particle test acceptance criteria shall be in accordance with B31.3 para. 344.4, except that no cracks are permitted.
3. A 5 % random in-process examination shall be performed in lieu of RT in accordance with ASME B31.3, Para. 341.4.1 & 344.7.
4. Black cells include Rm. No's. P-102, 104, 106, 108, 109, 111, 112, 113, 114 & 116 in the PT Building and Rm. No's. H-B005A, B032, B014, B021, B0005, B005A, B015, H-302 & H-308 in the HLW Building.

LEGEND:

RT – Radiographic Examination, PT/MT – Liquid Penetrant or Magnetic Particle Examination, VT – Visual Examination

APPENDIX P

Reboiler Skids and Preliminary Nozzle Loads At Grayloc Connections

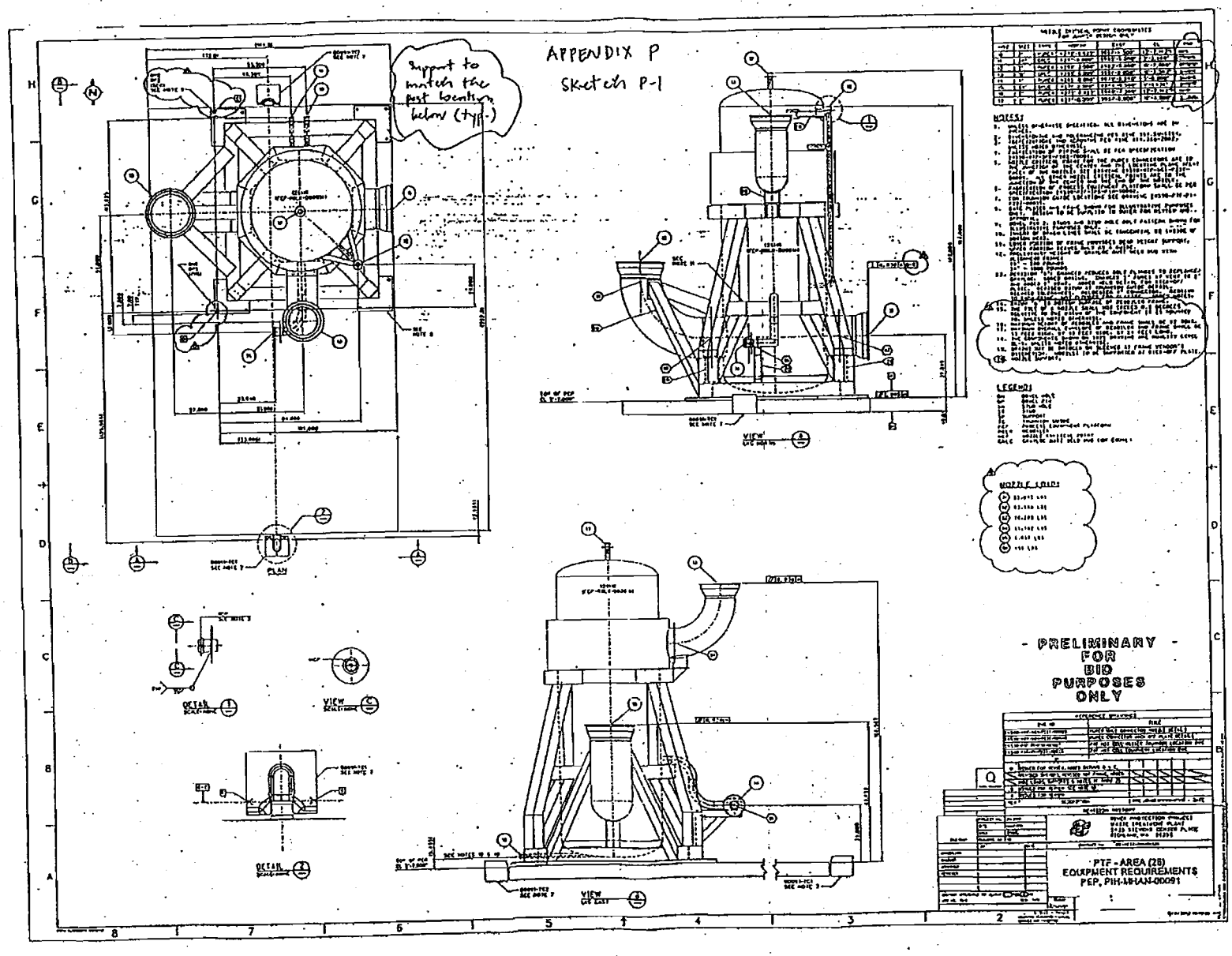
APPENDIX P
Sketch P-1
Support to match the post bearing below (typ.)
PLAN
VIEW
DETAIL
NOTES:
LEGEND:
- PRELIMINARY -
FOR
BID
PURPOSES
ONLY
PTF - AREA (28)
EQUIPMENT REQUIREMENTS
PEP, PIH-MHAN-00091

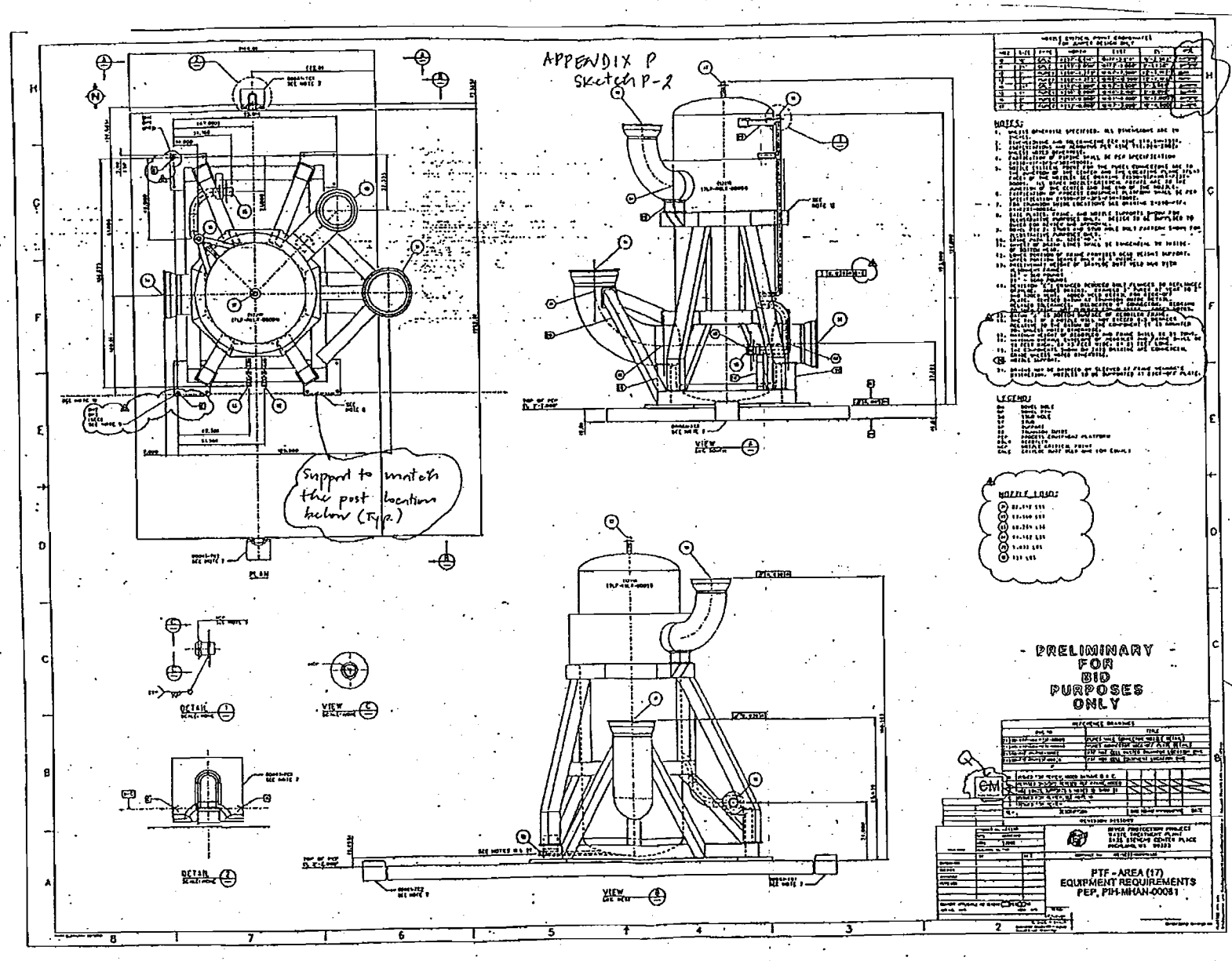
APPENDIX P
Sketch P-2
Support to match the post location below (Typ.)
PLAN
VIEW
DETAIL
NOTES:
LEGEND
NOZZLE LOAD:
- PRELIMINARY -
FOR
BID
PURPOSES
ONLY
PTF - AREA (17)
EQUIPMENT REQUIREMENTS
PEP, PIH-MHAN-00081

APPENDIX P

FEP / TLP Large Bore Reboiler Connector Loads

	System	Force		Moment	
		Axial	Resultant Shear	Torsion	Resultant Bending
		lbf	lbf	ft-lbf	ft-lbf
24-Inch					
AREA_17S	TLP	6400	15400	4300	33900
AREA_17D	TLP	11600	13900	31400	24000
AREA_26S	FEP	2100	8200	17100	30800
AREA_26D	FEP	14600	9900	19100	29300
AREA_27S	FEP	2100	8200	17100	30800
AREA_27D	FEP	14600	9900	19100	29300
18-Inch					
AREA_17ST	TLP	7600	3700	9000	6900
AREA_26ST	FEP	6700	4900	4600	11000
AREA_27ST	FEP	6700	4900	4600	11000

S - Suction D - Discharge ST - Steam

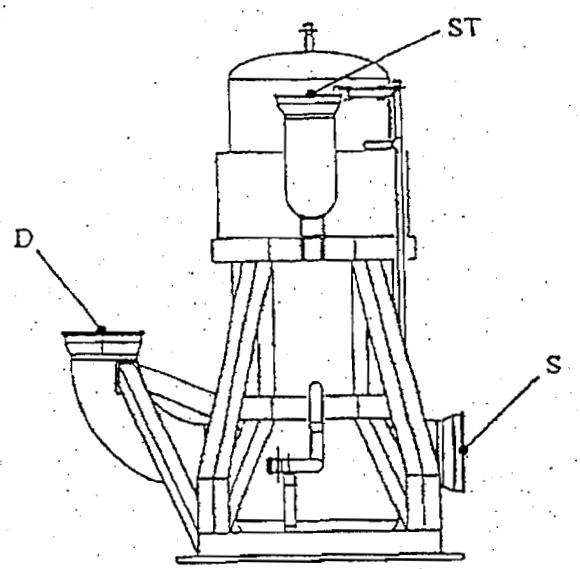

* The loads displayed in the table above are taken from unchecked / preliminary calculations. Loads occur at hub interface as shown in figure above.

APPENDIX P

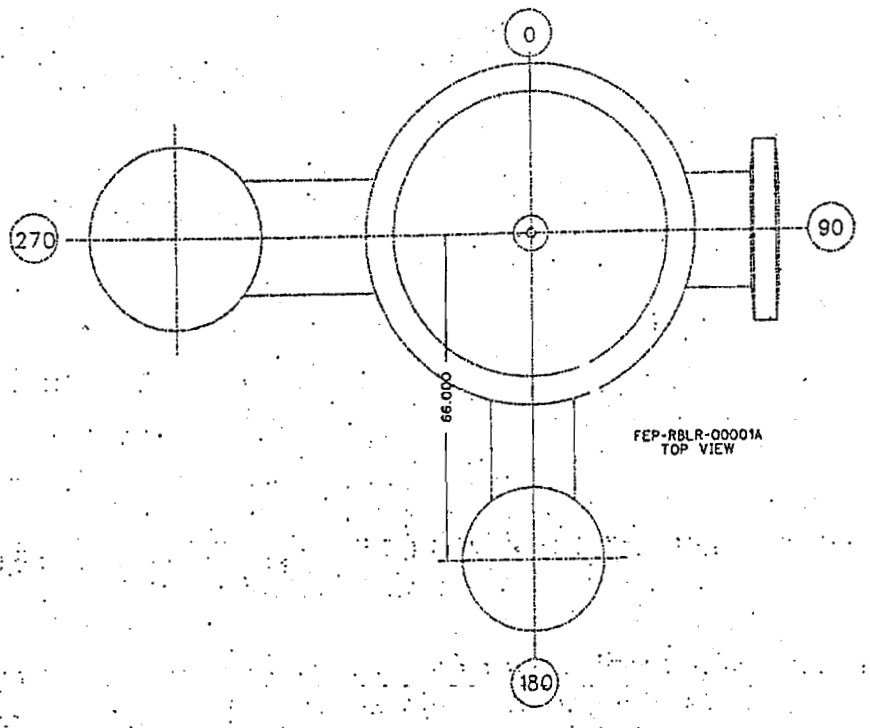

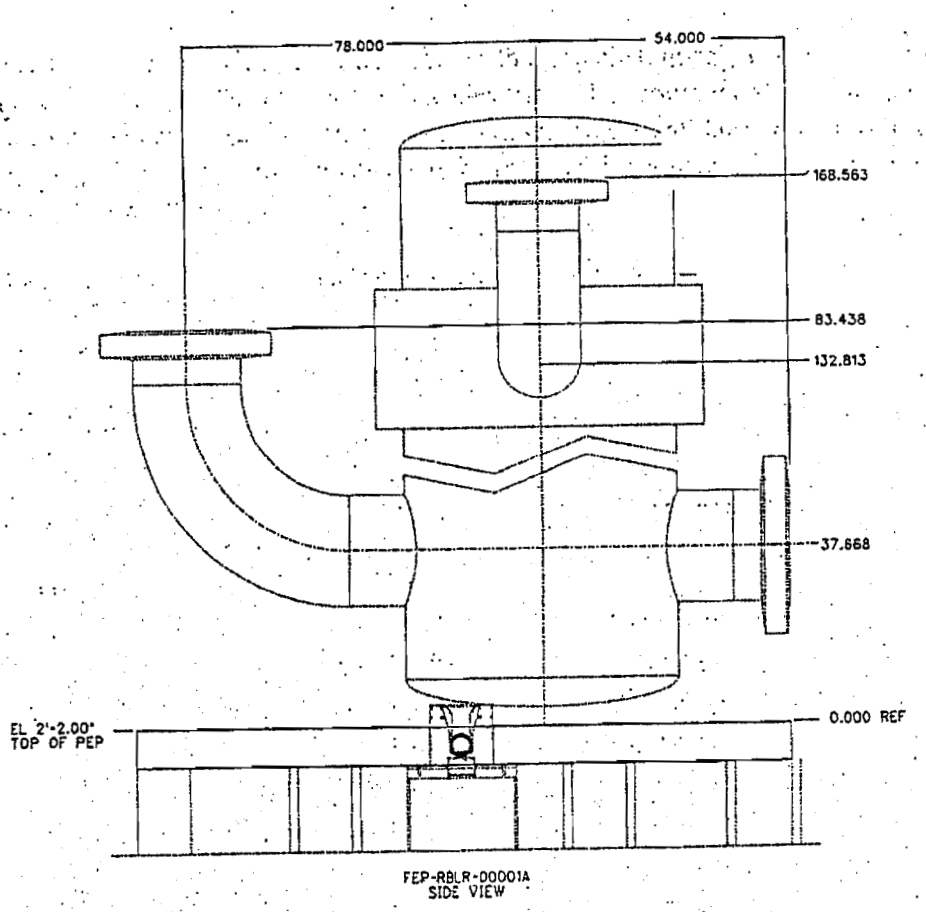

NOZZLE ORIENTATION, ELEVATION, AND DISTANCE FROM CENTERLINE
FEP-RBLR-00001A

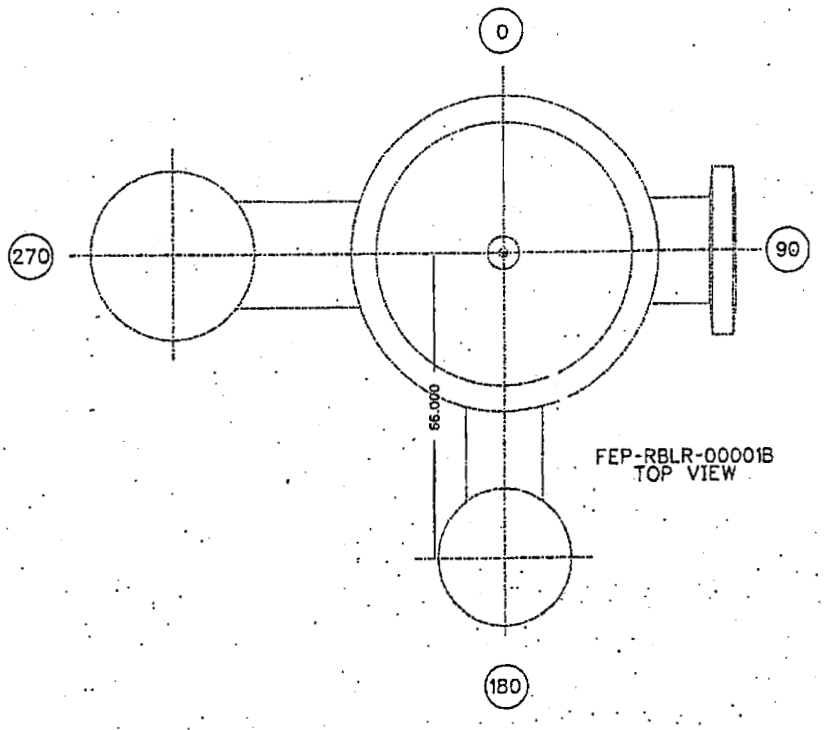

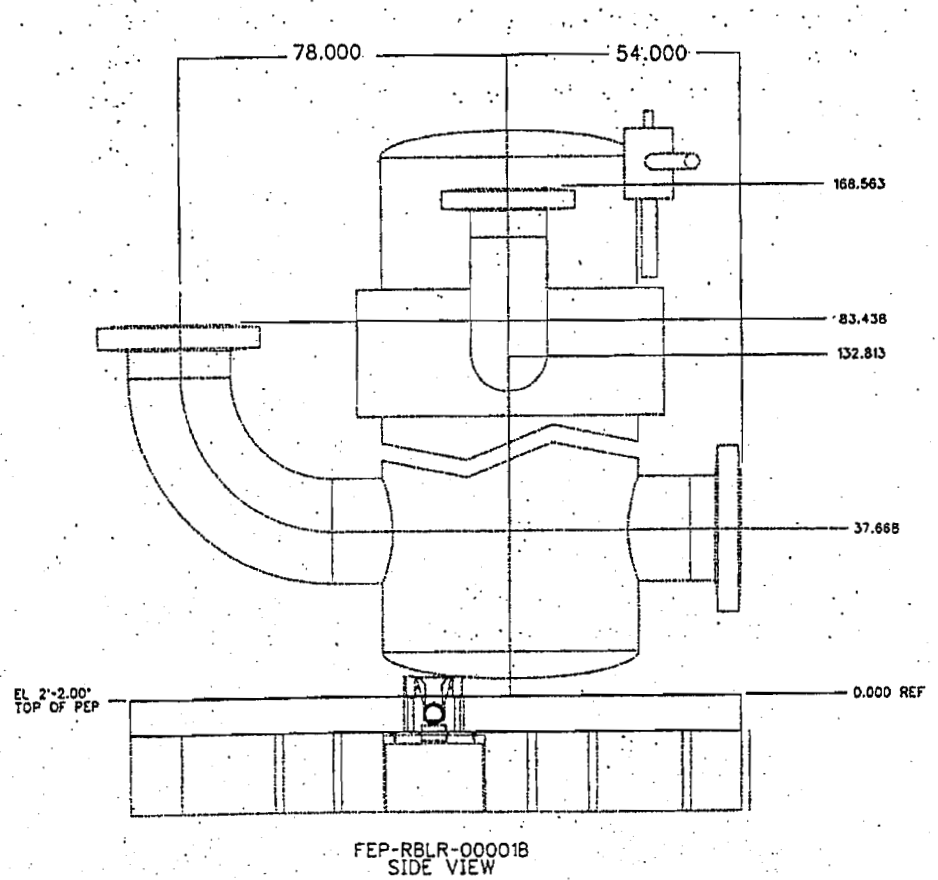

NOZZLE ORIENTATION, ELEVATION, AND DISTANCE FROM CENTERLINE
FEP-RBLR-00001B

APPENDIX P

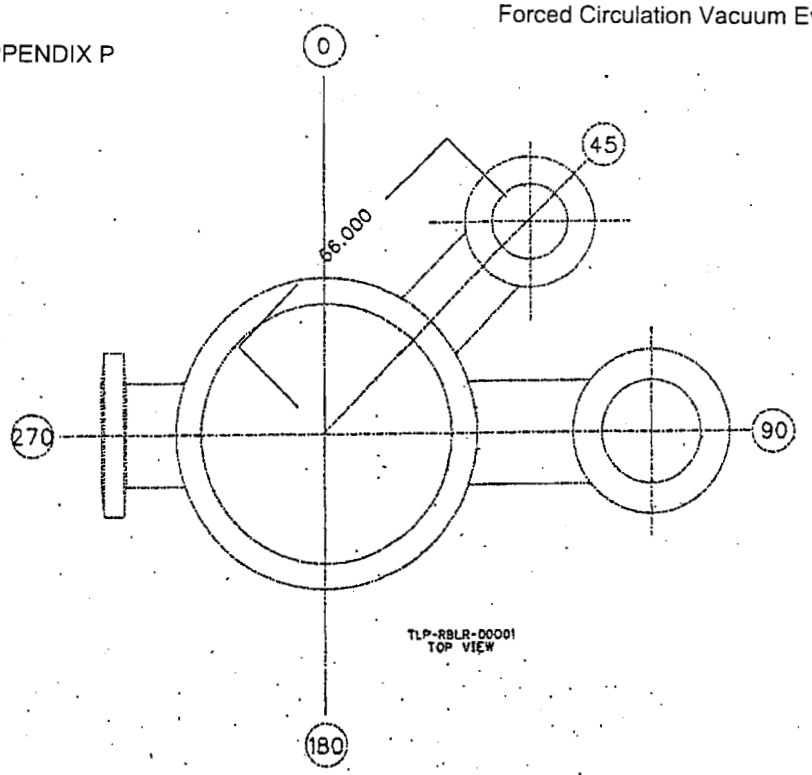

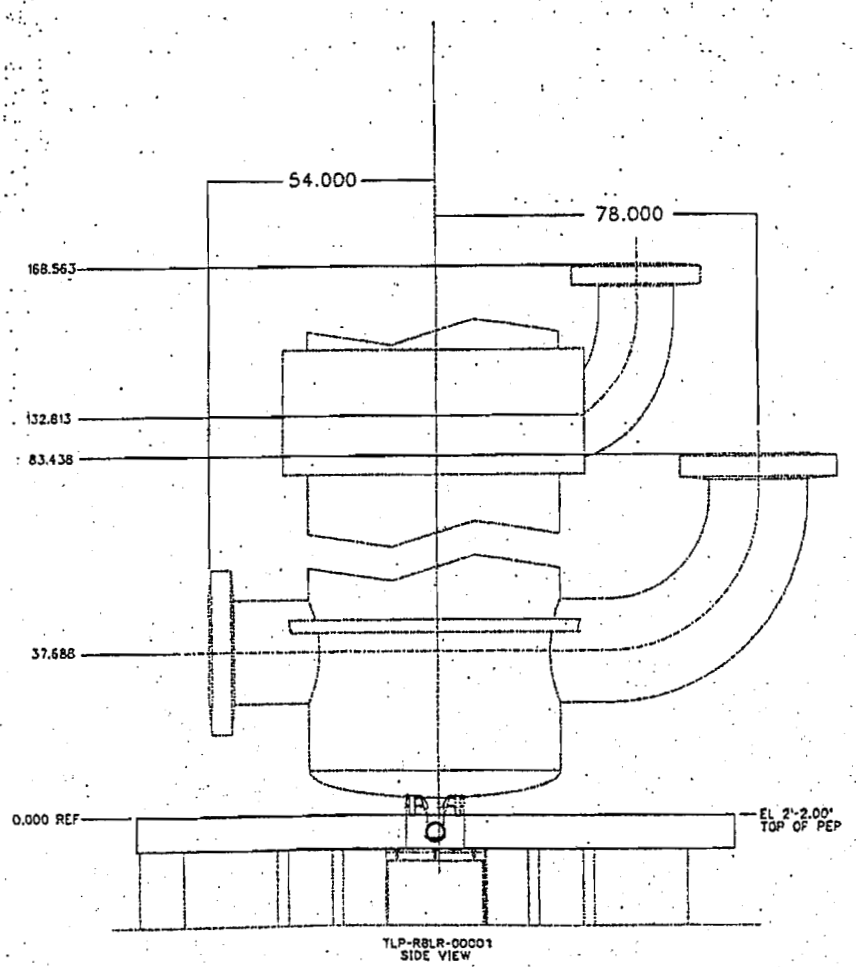

NOZZLE ORIENTATION, ELEVATION, AND DISTANCE FROM CENTERLINE
TLP-RBLR-00001

APPENDIX Q

Reboilers and Recirculation Pumps Layout

APPENDIX Q
SKETCH Q-1

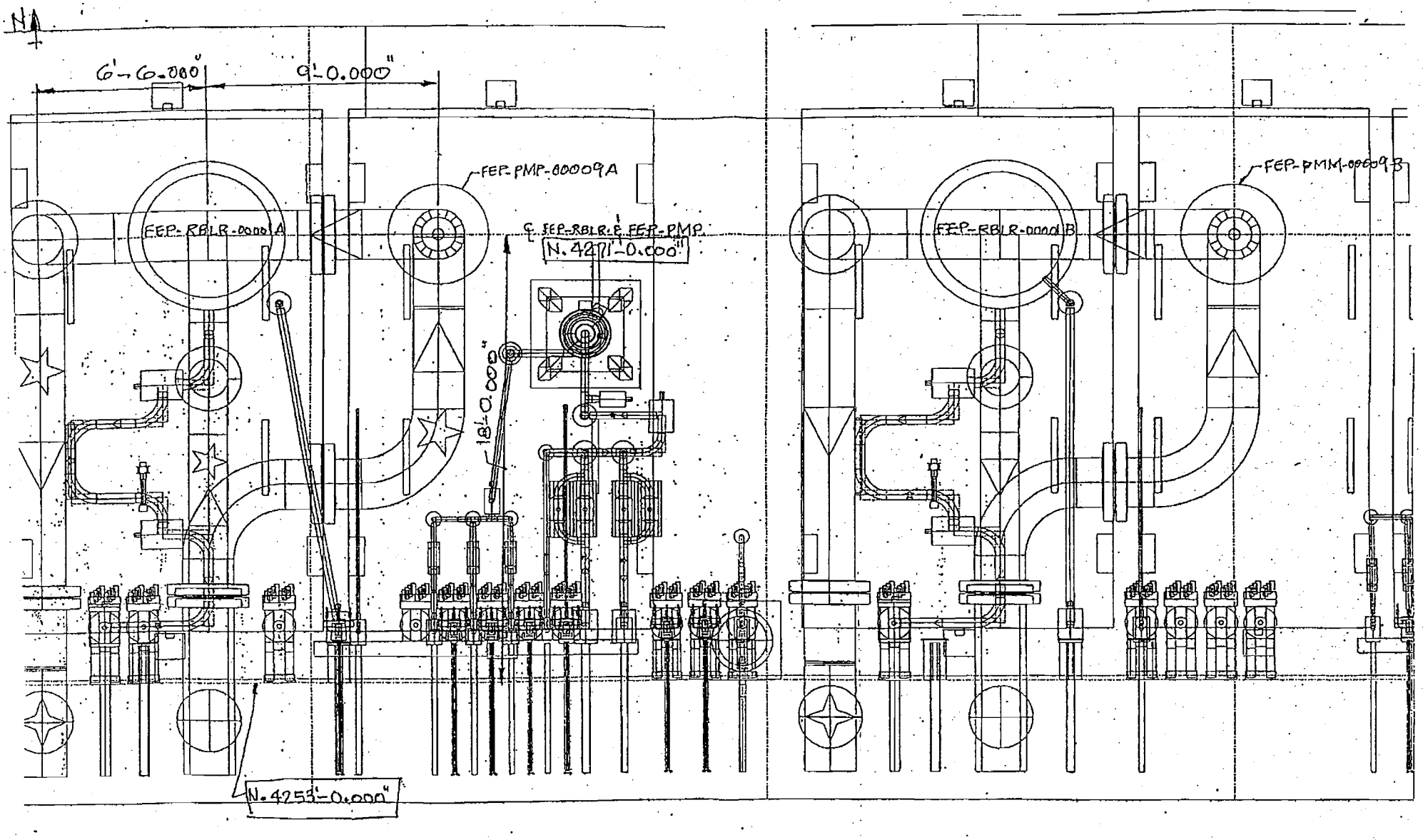

APPENDIX Q
Sketch Q-2

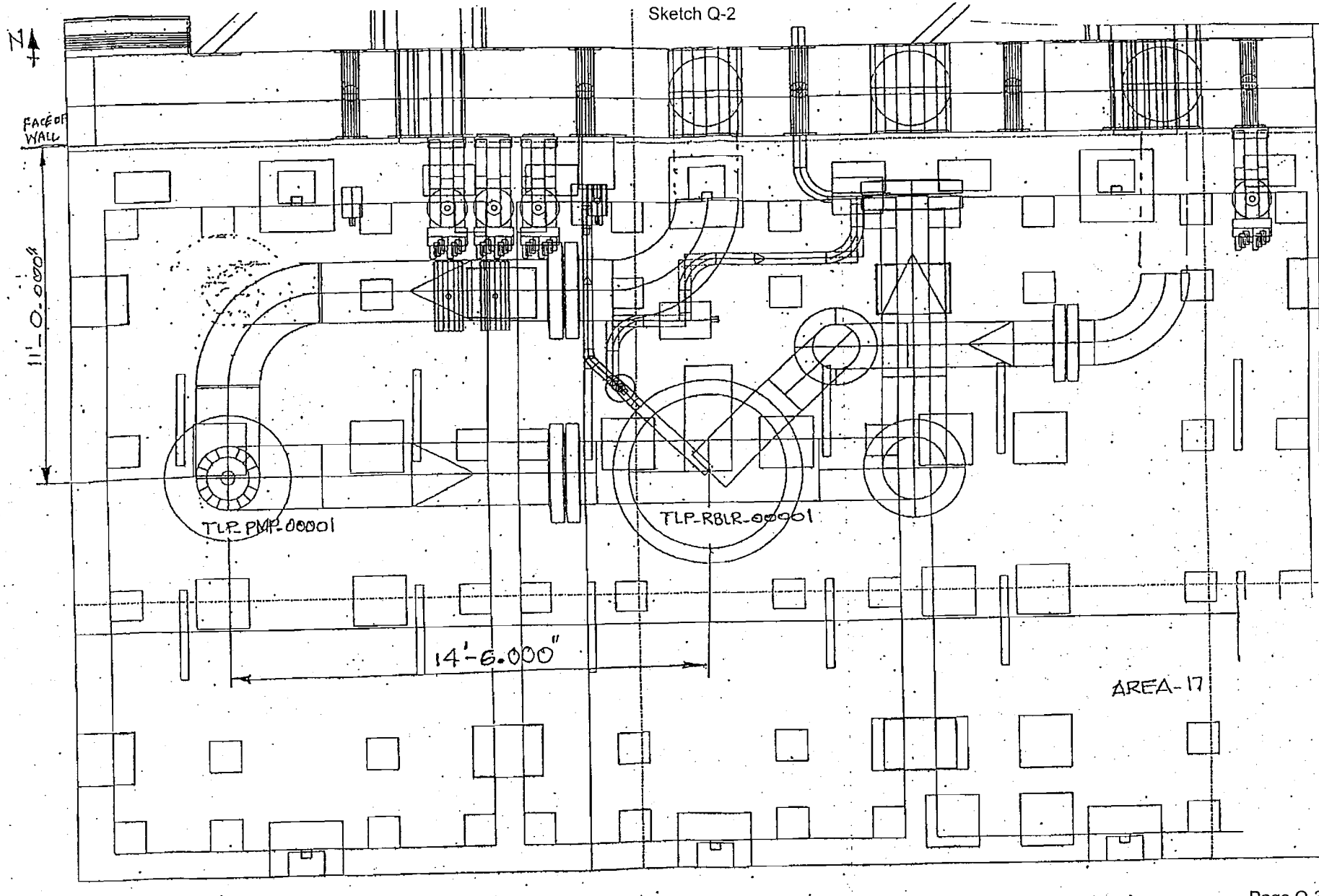

APPENDIX R

Deleted

APPENDIX S

Manufacturers Standard Coating Data Sheet

Manufacturers Standard Coating Data Sheet

The SELLER proposes the following Manufacturers Standard (Mfg. Std.) or alternate coating system that is suitable for the exposure conditions of steel items and equipment in radiation and non-radiation areas.

1. **Equipment Description:** _____
   A. Tag Number _____
   B. Part(s) i.e. skirt, shell, channels, lugs, etc.* _____
   C. Design/Operating Temperatures, designate °F or °C..... ..... _____ °F _____ °C
   D. Does Equipment Receive Steam out (Yes/No), Temperature _____ °F _____ °C
   E. Insulated/Uninsulated _____
   F. Fireproofing (Yes/No) _____
   G. Carbon Steel (CS), Stainless Steel (SS), other (List) _____
2. **Seller:** _____
3. **Surface Preparation:** SSPC No./Profile _____ / _____
4. **Coating System Designation:** (Code)

	First Coat	Second Coat	Third Coat
A. Type of Coating.....			
B. Coating Mfg./No.**			
C. Dry Film Thickness (Min/Max in mils)/(μm) ...			
D. Wet/Film Thickness (Min/Max in mils)/(μm)			
E. Curing Method.....			
F. Color.....			
G. Dry to Recoat			
H. Pot Life.....			
I. Thinner / %			

5. **Total DFT of System:** (Mils/μm)(Min/Max)..... _____ / Min. _____ /Max.
6. **Material Storage:** Temperature Requirements (Min/Max) _____ / _____
7. **Shelf Life:** ..... _____ Months
8. **Application Environmental Limits:**
   A. Temperature Ambient and Surface (Min/Max) ..... _____ / _____ _____ / _____
   B. Humidity (Min/Max)..... _____ / _____
   C. Dew Point ≥5°F above surface temp. (Yes/No)..... _____
9. **Protection of surfaces that will be inaccessible after equipment installation (such as underside of base plates, interior of fans, vessels or equipment housings)** _____
10. **Rust Preventative for machined faces:** (**Mfg./No.) _____
11. **Quantity of touch-up coating supplied:** _____
12. **Additional information:** (attach extra page as necessary) _____

* Use additional copies of this form for each part described in 1 above that requires a different coating system. A completed copy of this data sheet shall be submitted to CONTRACTOR/BUYER with the initial vendor data submittal.

** Include manufacturers technical data sheets and MSDS' for each proposed coating, preservative & solvent

APPENDIX T

Design Evolution Inputs

T.1 Recirculation Pump Remote Connector Design Inputs

Design Input #1: The Hanford connector loads are 2000 lbs resultant force and 2900 ft-lbs resultant moment.

Design Input #2: See attached reference # 2 for Staubli connector drawings. It is recommended to use connector types as shown on drawings S-01162803-A and S-01142503-A for power and signal. Also see sketches provided in this section T.1 for additional design inputs. The Staubli connector force requirement is 400 lbf in any direction.

Design Input #3: For seal water and grease connections, the male plug located on the pump seals which has been called out as a Staubli part number RBE 19.6204/IC will change to Staubli part number N 011 612 04. See sketches # S-01249904-F, # S-00122805-A, # S-00119705-B, and S-111610-04-D provided in this section. The Staubli Fluids Connector shall use Keying #35 for for the seal water and grease connnection.

Design Input #4: Remote impact wrench specification on studs

a) Loosen 750 ft-lbs
b) Tighten 400 ± 25 ft-lbs
c) Range 100 - 400 ft-lbs

Design Input #5: Recirculation pump shall be designed to incorporate remote grease application to thrust bearing.

For power cable (prefer)

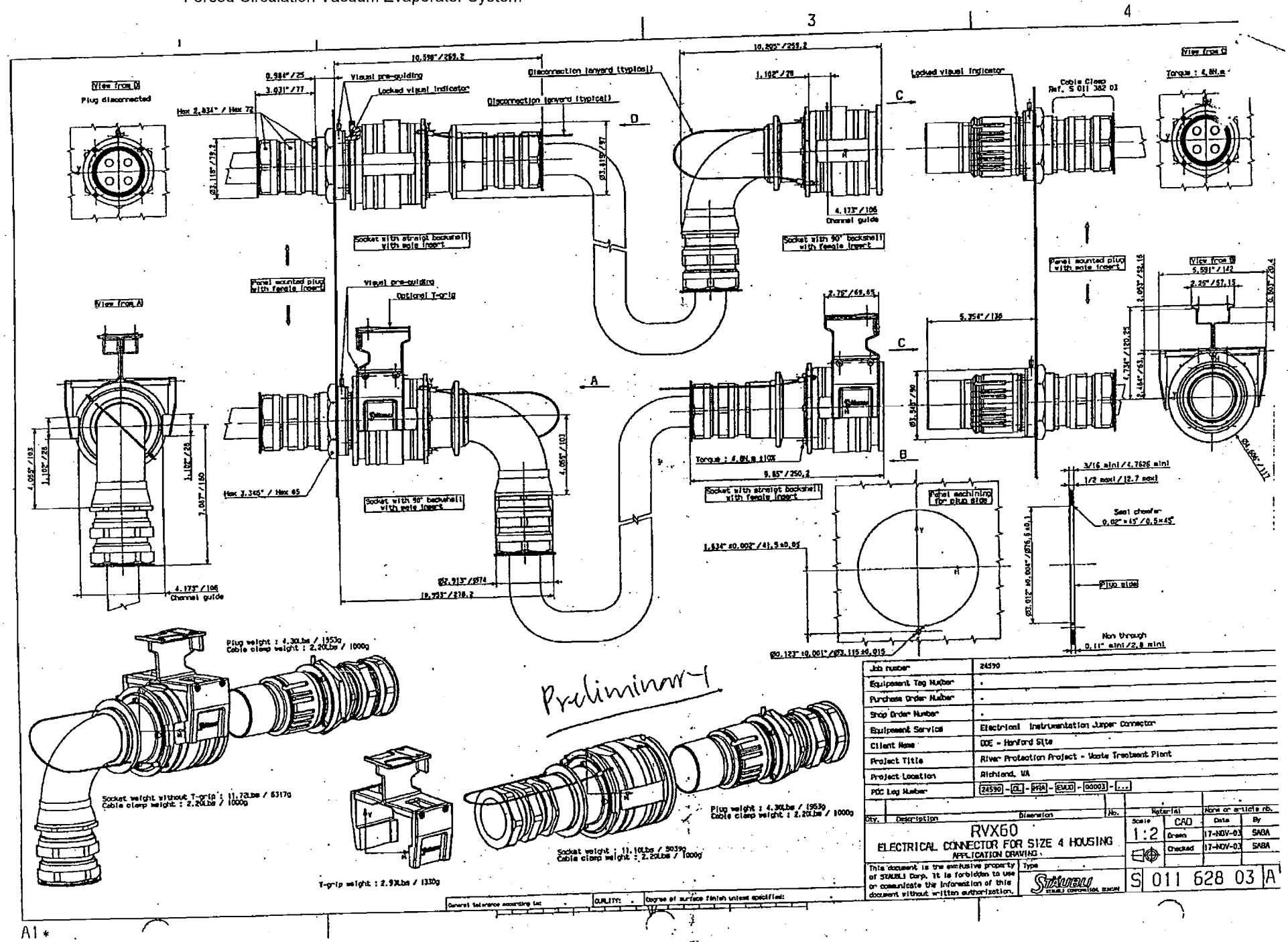

For signal cable (prefer)

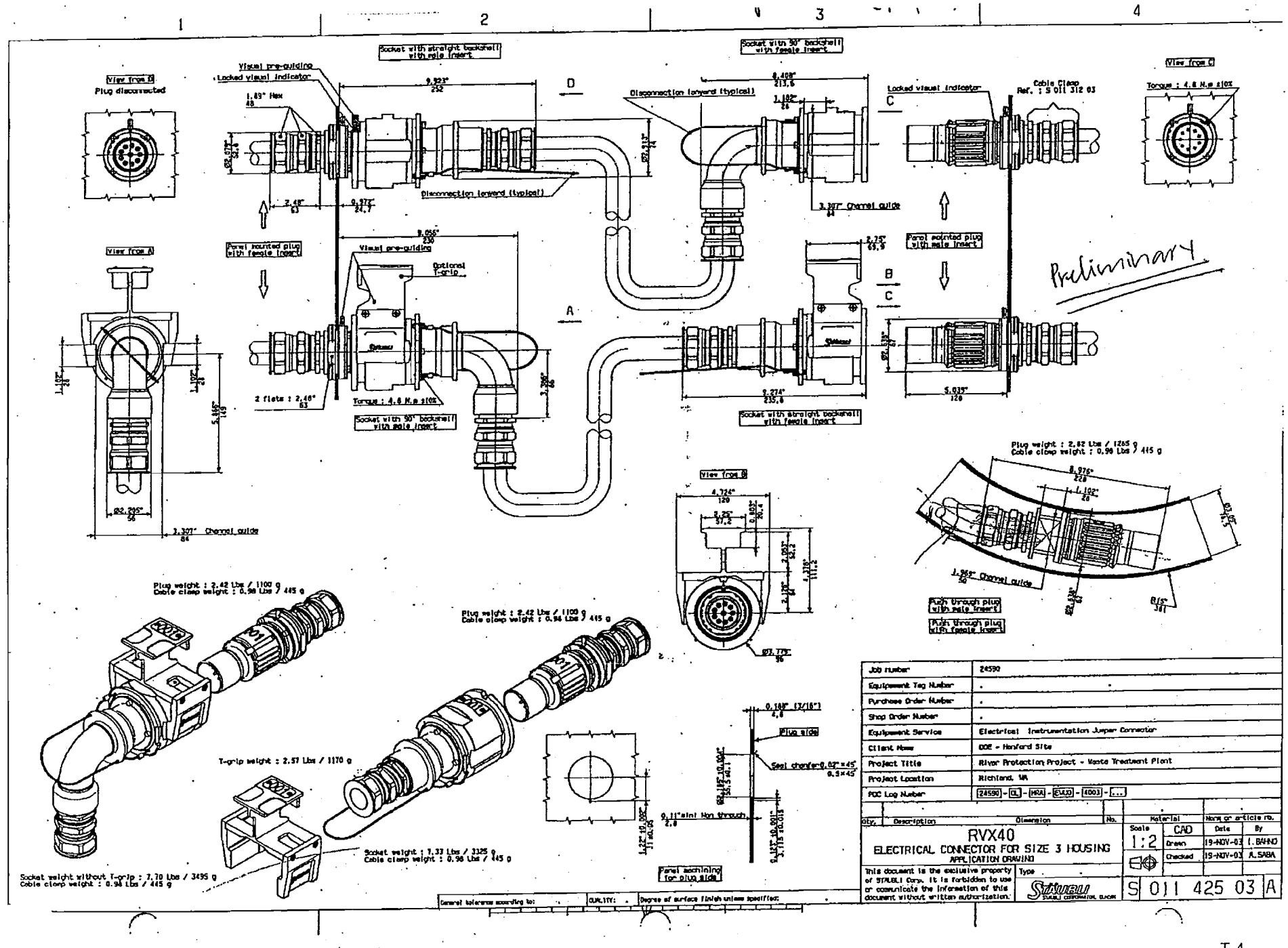

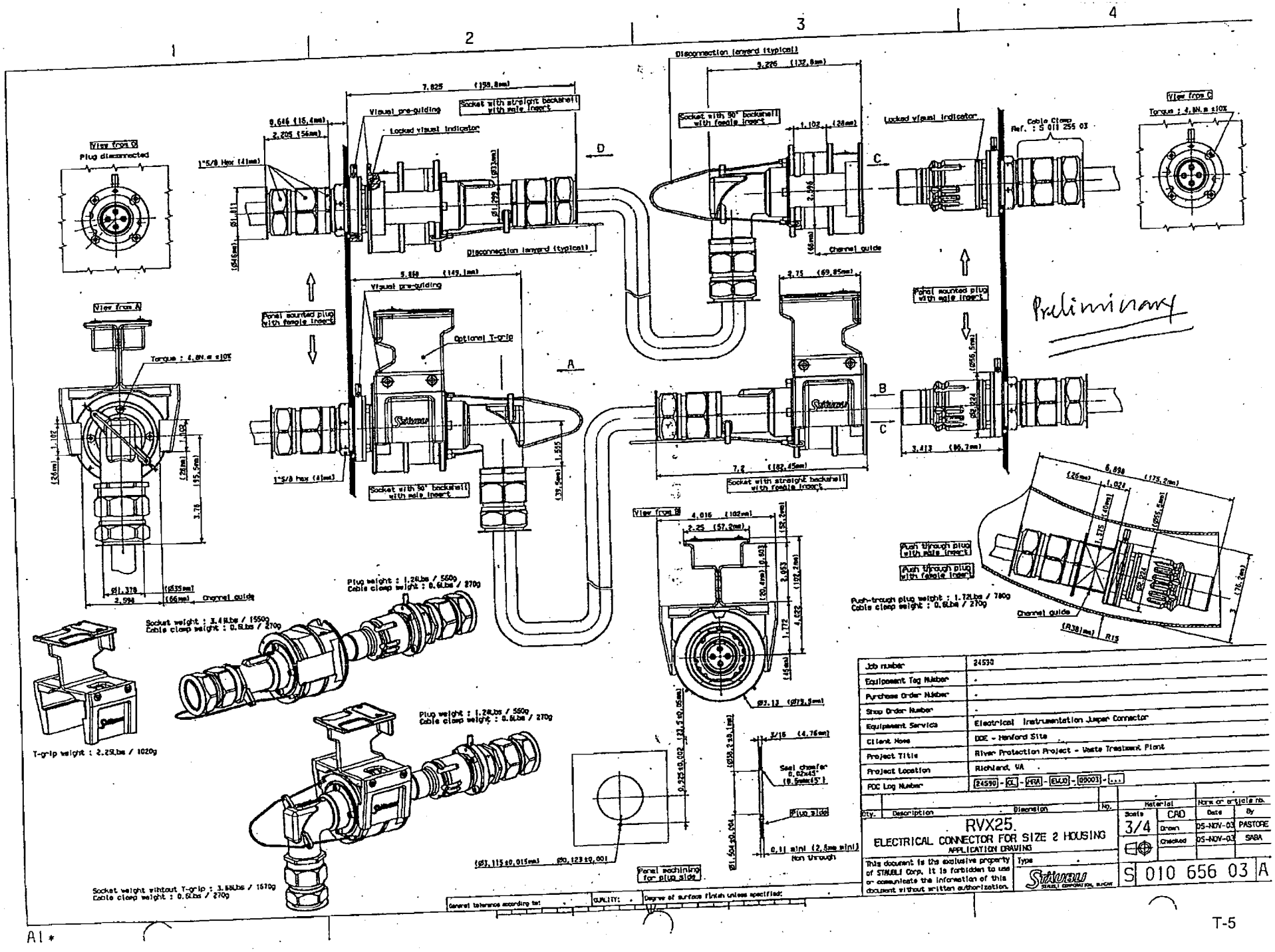
Preliminary
View from D
Plug disconnected
View from A
Torque : 4,8N.m ±10%
View from C
Torque : 4,8N.m ±10%
Disconnection lanyard (typical)
Socket with straight backshell with male insert
Visual pre-guiding
Locked visual indicator
Socket with 90° backshell with female insert
Cable Clamp Ref. : S 011 255 03
Channel guide
Panel mounted plug with female insert
Panel mounted plug with male insert
Optional T-grip
Socket with 90° backshell with male insert
Socket with straight backshell with female insert
Push through plug with male insert
Push through plug with female insert
Plug weight : 1,2Lbs / 560g
Cable clamp weight : 0,6Lbs / 270g
Socket weight : 3,4Lbs / 1550g
Cable clamp weight : 0,6Lbs / 270g
T-grip weight : 2,2Lbs / 1020g
Socket weight without T-grip : 3,8Lbs / 1670g
Cable clamp weight : 0,6Lbs / 270g
Push-trough plug weight : 1,72Lbs / 780g
Cable clamp weight : 0,6Lbs / 270g
Seal chamfer 0,62x45° (0,5mm45°)
Plug side
Panel machining for plug side
Non through
General tolerance according to:
QUALITY:
Degree of surface finish unless specified:
Job number 24590
Equipment Tag Number
Purchase Order Number
Shop Order Number
Equipment Service Electrical Instrumentation Jumper Connector
Client Name DOE - Hanford Site
Project Title River Protection Project - Waste Treatment Plant
Project Location Richland, WA
PDC Log Number 24590 - CL - PER - EWJO - 00003 - ...
RVX25.
ELECTRICAL CONNECTOR FOR SIZE 2 HOUSING
APPLICATION DRAWING
Scale 3/4
CAD
Drawn 05-NOV-03 PASTORE
Checked 05-NOV-03 SABA
S 010 656 03 A
This document is the exclusive property of STAUBLI Corp. It is forbidden to use or communicate the information of this document without written authorization.
STAUBLI

A1 *

T-5

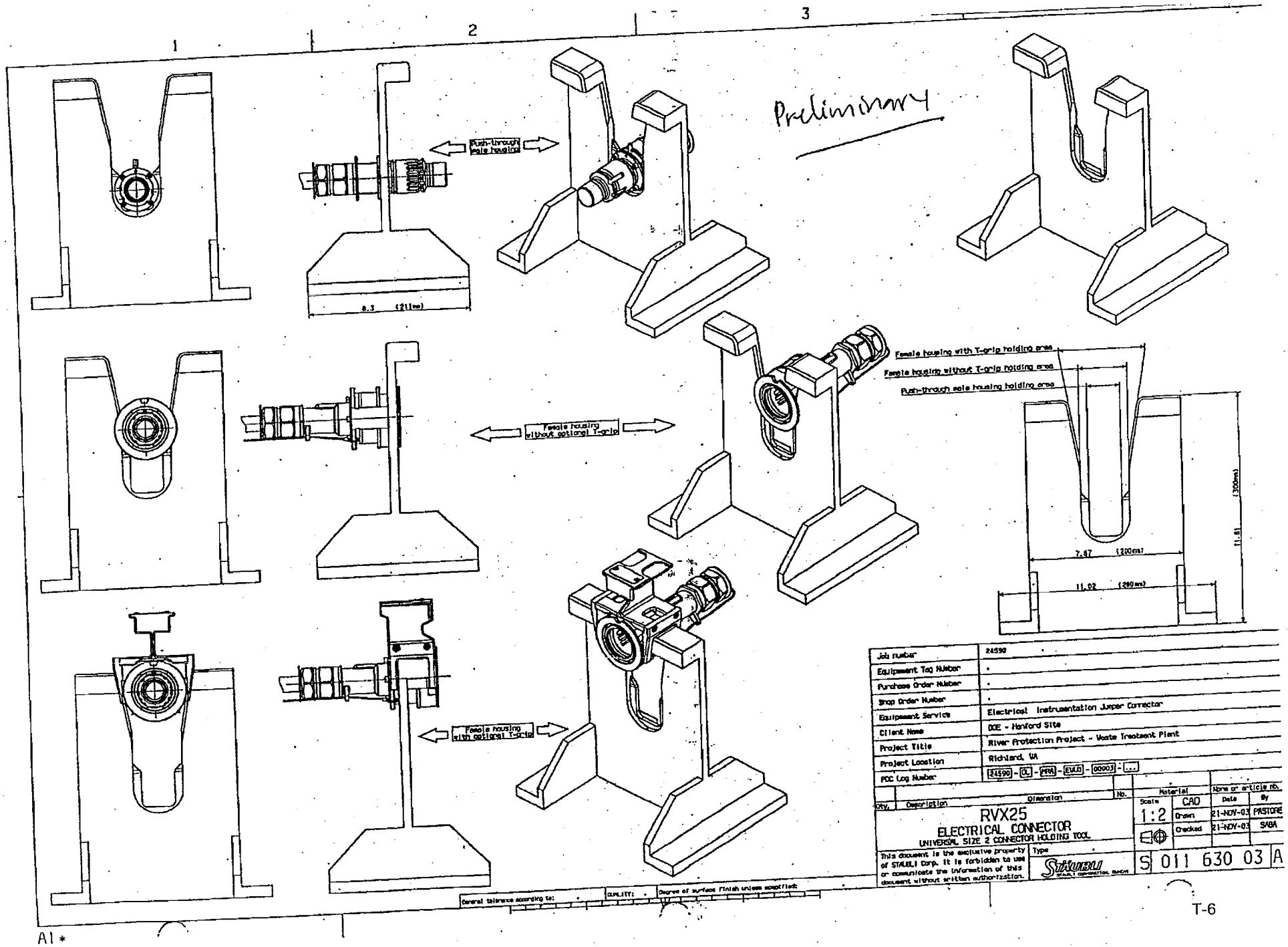
Preliminary
Push-through male housing
8.3 (211mm)
Female housing without optional T-grip
Female housing with optional T-grip
Female housing with T-grip holding area
Female housing without T-grip holding area
Push-through male housing holding area
7.87 (200mm)
11.02 (280mm)
11.81 (300mm)
Job number 24590
Equipment Tag Number
Purchase Order Number
Shop Order Number
Equipment Service Electrical Instrumentation Jumper Connector
Client Name DOE - Hanford Site
Project Title River Protection Project - Waste Treatment Plant
Project Location Richland, WA
PDC Log Number 24590 - OL - MRN - EWLD - 00003 - ...
Qty. Description Dimension No. Material Norm or article no.
RVX25
ELECTRICAL CONNECTOR
UNIVERSAL SIZE 2 CONNECTOR HOLDING TOOL
Scale 1:2
CAD
Drawn 21-NOV-03 PASTORE
Checked 21-NOV-03 SABA
Type
This document is the exclusive property of STAUBLI Corp. It is forbidden to use or communicate the information of this document without written authorization.
S 011 630 03 A
General tolerance according to:
QUALITY:
Degree of surface finish unless specified:

A1 *

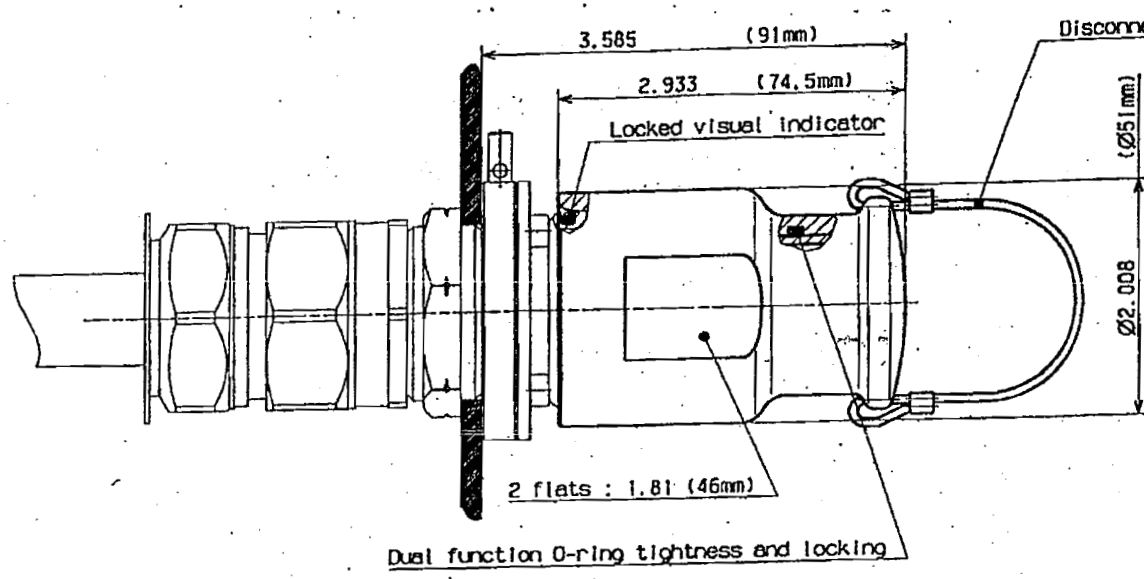

Preliminary

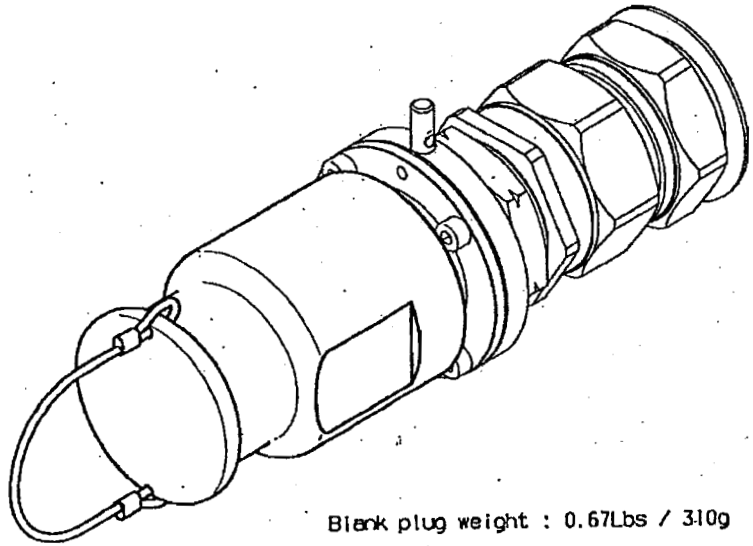

Blank plug weight : 0.67Lbs / 310g

Job number	24590
Equipement Tag Number	.
Purchase Order Number	.
Shop Order Number	.
Equipement Service	Electrical Instrumentation Jumper Connector
Client Name	DOE - Hanford Site
Project Title	River Protection Project - Waste Treatment Plant
Project Location	Richland, WA
POC Log Number	24590 - QL - MRA - EWU0 - 00003 - ...

Qty.	Description	Dimension	No.	Material	Norm or article nb.

RVX25

ELECTRICAL CONNECTOR BLANK PLUG FOR SIZE 2 HOUSING
APPLICATION DRAWING

Scale	CAD	Date	By
1	Drawn	19-NOV-03	PASTORE
	Checked	19-NOV-03	SABA

This document is the exclusive property of STAUBLI Corp. It is forbidden to use or communicate the information of this document without written authorization.

Type

STAUBLI
STAUBLI CORPORATION, DUNCAN

S 011 494 03 A

General tolerance according to: . QUALITY: . Degree of surface finish unless specified : .

A3

T-7

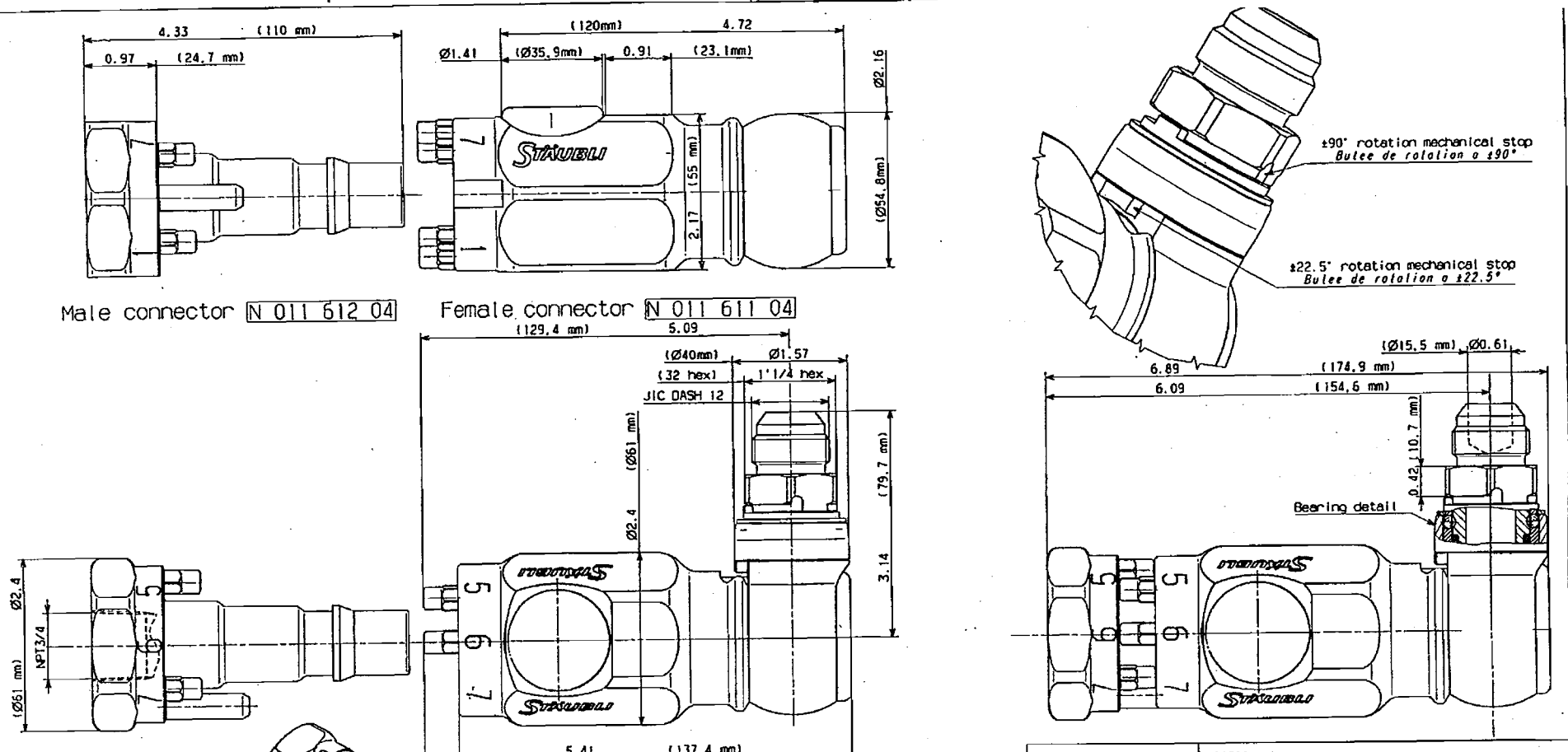

Job number	24590
Equipement Tag Number	.
Purchase Order Number	.
Shop Order Number	.
Equipement Service	Flexible pneumatic / Process Jumper Fabrication
Client Name	DOE - Hanford Site
Project Title	River Protection Project - Waste Treatment Plant
Project Location	Richland, WA
PDC Log Number	24590 - CM - MRA - PF00 - 00003 - ...

Qty.	Description	Dimension	No.	Material	Name or article no.

RBE19CM
PNEUMATIC CONNECTOR
APPLICATION DRAWING

Scale	CAD	Date	By
1	Drawn	28-JAN-05	PASTORE
	Checked	28-JAN-05	CHAPPAZ

This document is the exclusive property of STAUBLI Corp. It is forbidden to use or communicate the information of this document without written authorization.

Type .

STAUBLI CORPORATION, QUICK

S 012 499 04 F

General tolerance according to: . QUALITY: . Degree of surface finish unless specified : .

A2 •

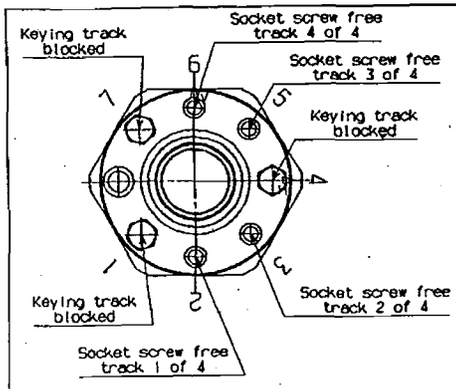

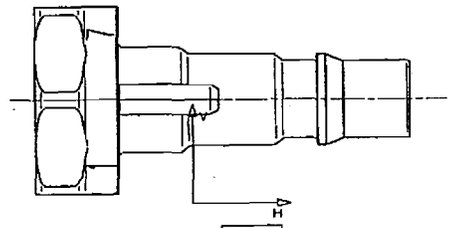

Plug

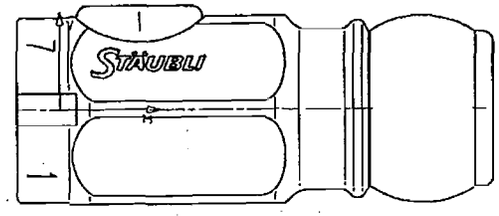

Socket

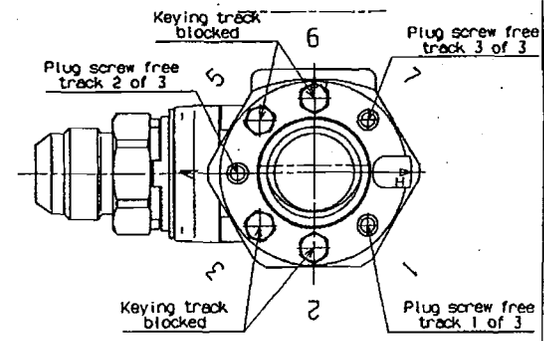

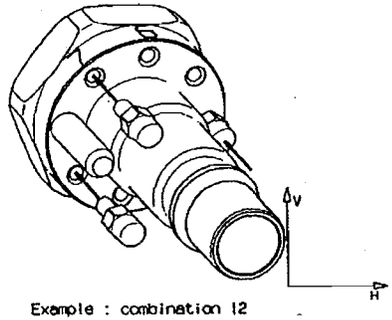

Example : combination 12

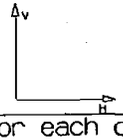

* For each combination the 7 screws must be installed.
* Screws thread lock : Loctite F2432
* Torque : 9.5 N.m

Comb.	Screw 1	Screw 2	Screw 3
01	Track 1	Track 2	Track 3
02	Track 1	Track 2	Track 4
03	Track 1	Track 2	Track 5
04	Track 1	Track 2	Track 6
05	Track 1	Track 2	Track 7
06	Track 1	Track 3	Track 4
07	Track 1	Track 3	Track 5
08	Track 1	Track 3	Track 6
09	Track 1	Track 3	Track 7
10	Track 1	Track 4	Track 5
11	Track 1	Track 4	Track 6
12	Track 1	Track 4	Track 7
13	Track 1	Track 5	Track 6
14	Track 1	Track 5	Track 7
15	Track 1	Track 6	Track 7
16	Track 2	Track 3	Track 4
17	Track 2	Track 3	Track 5
18	Track 2	Track 3	Track 6
19	Track 2	Track 3	Track 7
20	Track 2	Track 4	Track 5
21	Track 2	Track 4	Track 6
22	Track 2	Track 4	Track 7
23	Track 2	Track 5	Track 6
24	Track 2	Track 5	Track 7
25	Track 2	Track 6	Track 7
26	Track 3	Track 4	Track 5
27	Track 3	Track 4	Track 6
28	Track 3	Track 4	Track 7
29	Track 3	Track 5	Track 6
30	Track 3	Track 5	Track 7
31	Track 3	Track 6	Track 7
32	Track 4	Track 5	Track 6
33	Track 4	Track 5	Track 7
34	Track 4	Track 6	Track 7
35	Track 5	Track 6	Track 7

Comb.	Screw 1	Screw 2	Screw 3	Screw 4
01	Track 4	Track 5	Track 6	Track 7
02	Track 3	Track 5	Track 6	Track 7
03	Track 3	Track 4	Track 6	Track 7
04	Track 3	Track 4	Track 5	Track 7
05	Track 3	Track 4	Track 5	Track 6
06	Track 2	Track 5	Track 6	Track 7
07	Track 2	Track 4	Track 6	Track 7
08	Track 2	Track 4	Track 5	Track 7
09	Track 2	Track 4	Track 5	Track 6
10	Track 2	Track 3	Track 6	Track 7
11	Track 2	Track 3	Track 5	Track 7
12	Track 2	Track 3	Track 5	Track 6
13	Track 2	Track 3	Track 4	Track 7
14	Track 2	Track 3	Track 4	Track 6
15	Track 2	Track 3	Track 4	Track 5
16	Track 1	Track 5	Track 6	Track 7
17	Track 1	Track 4	Track 6	Track 7
18	Track 1	Track 4	Track 5	Track 7
19	Track 1	Track 4	Track 5	Track 6
20	Track 1	Track 3	Track 6	Track 7
21	Track 1	Track 3	Track 5	Track 7
22	Track 1	Track 3	Track 5	Track 6
23	Track 1	Track 3	Track 4	Track 7
24	Track 1	Track 3	Track 4	Track 6
25	Track 1	Track 3	Track 4	Track 5
26	Track 1	Track 2	Track 6	Track 7
27	Track 1	Track 2	Track 5	Track 7
28	Track 1	Track 2	Track 5	Track 6
29	Track 1	Track 2	Track 4	Track 7
30	Track 1	Track 2	Track 4	Track 6
31	Track 1	Track 2	Track 4	Track 5
32	Track 1	Track 2	Track 3	Track 7
33	Track 1	Track 2	Track 3	Track 6
34	Track 1	Track 2	Track 3	Track 5
35	Track 1	Track 2	Track 3	Track 4

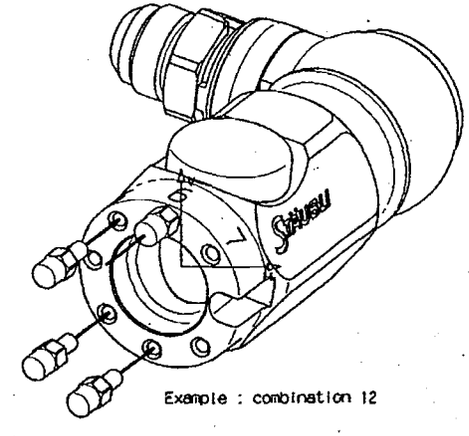

Example : combination 12

Job number	24590
Equipement Tag Number	.
Purchase Order Number	.
Shop Order Number	.
Equipement Service	Flexible pneumatic / Process Jumper Fabrication
Client Name	DOE - Hanford Site
Project Title	River Protection Project - Waste Treatment Plant
Project Location	Richland, WA
POC Log Number	24590 - CM - MRA - PF00 - 00003 - ...

N.bre | Désignation | Dimension | Rep. | Matière | Norme ou N° d'article

RBE19CM

Key combination sheet and assembly instructions

Echelle	CAD	Date	Visa
1	Dessiné	10-JAN-05	PASTORE
	Contrôlé	10-JAN-05	CHAPPAZ

Ce document est la propriété exclusive de STAUBLI FAVERGES . Il est interdit d'en faire usage ou de le communiquer sans son autorisation écrite .

Type

STAUBLI FAVERGES

S 001 228 05 A

Tolérances générales selon : . Qualité: Criticité: . Degré de façonnage sauf indications spéciales: .

A2

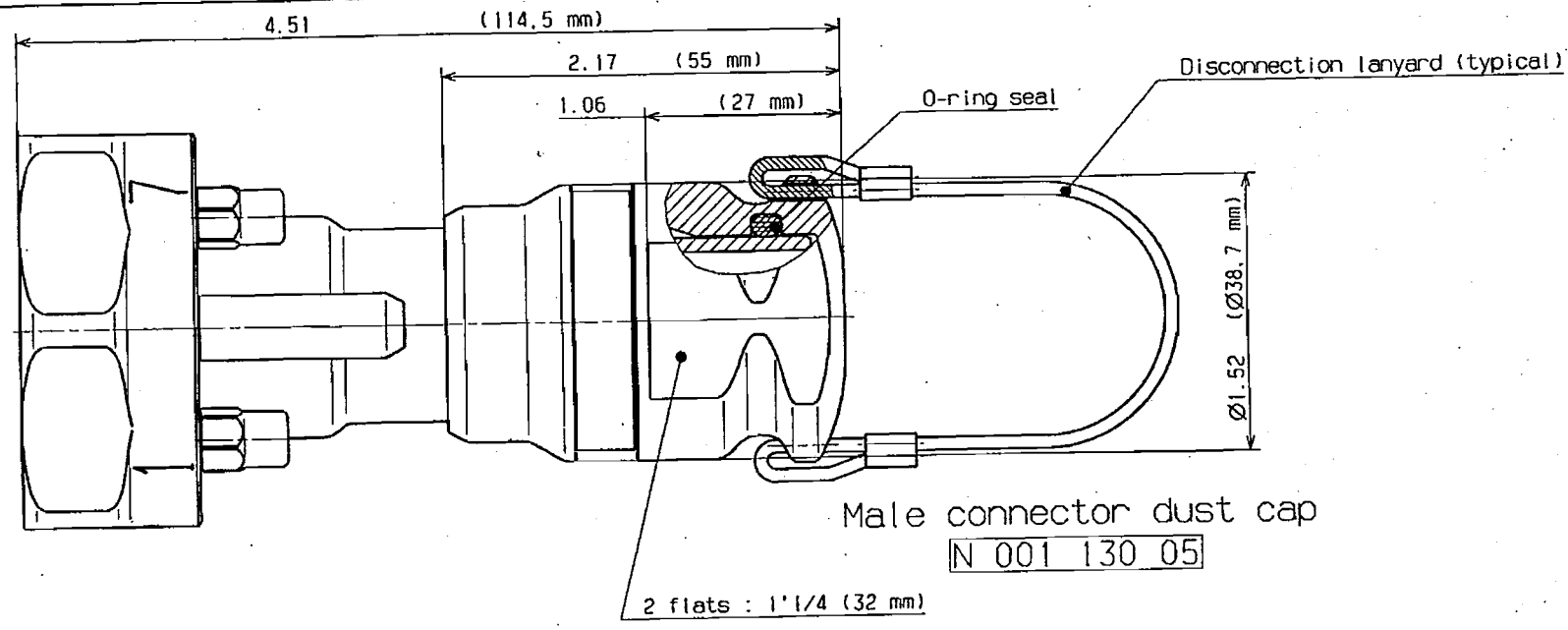

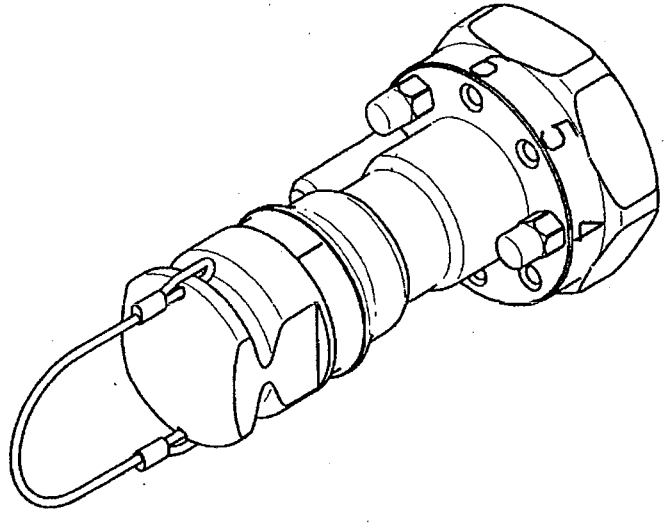

Job number	24590
Equipement Tag Number	.
Purchase Order Number	.
Shop Order Number	.
Equipement Service	Flexible pneumatic / Process Jumper Fabrication
Client Name	DOE - Hanford Site
Project Title	River Protection Project - Waste Treatment Plant
Project Location	Richland, WA
PDC Log Number	24590 - CM - MRA - PF00 - 00003 - ...

Qty.	Description	Dimension	No.	Material	Norm or article nb.

RBE19CM
PNEUMATIC CONNECTOR DUST CAP
APPLICATION DRAWING

Scale	CAD	Date	By
1	Drawn	28-JAN-05	PASTORE
	Checked	28-JAN-05	CHAPPAZ

This document is the exclusive property of STAUBLI Corp. It is forbidden to use or communicate the information of this document without written authorization.

Type

STAUBLI CORPORATION, DUNCAN

S 001 197 05 B

General tolerance according to: . QUALITY: . Degree of surface finish unless specified :

A3 *

PRODUCT APPLICATION SHEET
RBE 19 CM

APPLICATION

Remotely operated fluid connector for radioactive environment designed to allow a high number of keying possibilities set on site.

CONNECTION:

1. The three sets of opposed flats on the female housing allow the manipulator jaws to grab and index the connector during operation.
2. The staged guiding helps in addressing the misalignment between the male and female connector.
3. The visual pre-guiding helps the operator to position the indexation.
4. The indexation operates before the safety keys.
5. The safety keying will then allow connection only if the female connector configuration matches the male one. (***picture 2*** : safety keying, ***picture 3*** : purple screw unmatches the gray one)
6. The connection can now be completed by the automatic locking mechanism (no need to operate the locking mechanism during connection). Once the indexing is made the connectors can be pushed using the flat area located on the elbow.

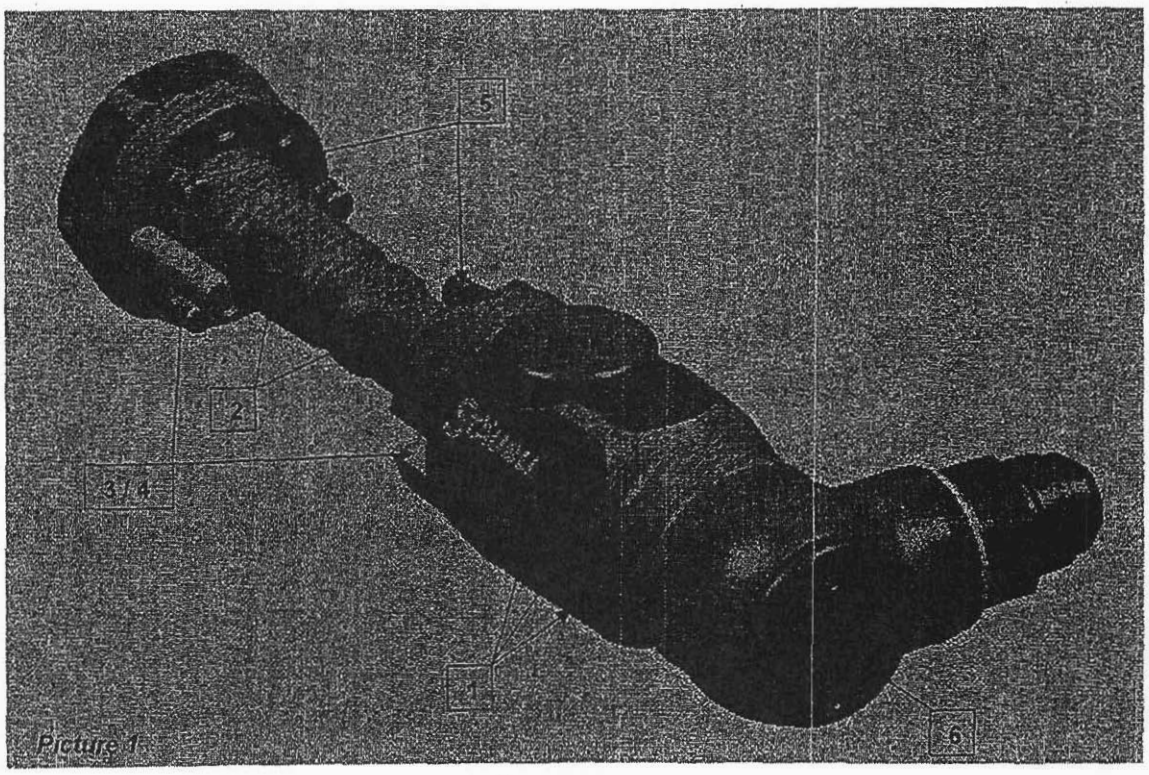

Picture 1

This document is the exclusive property of STAUBLI Corp. It is forbidden to use or comunicate the information of this document without written authorization.

Written : Pastore	Le : 28/01/05	Checked : Chappaz	Le : 28/01/05

STÄUBLI S 111 610 04 D

DISCONNECTION:

Directly push the release button for disconnection.

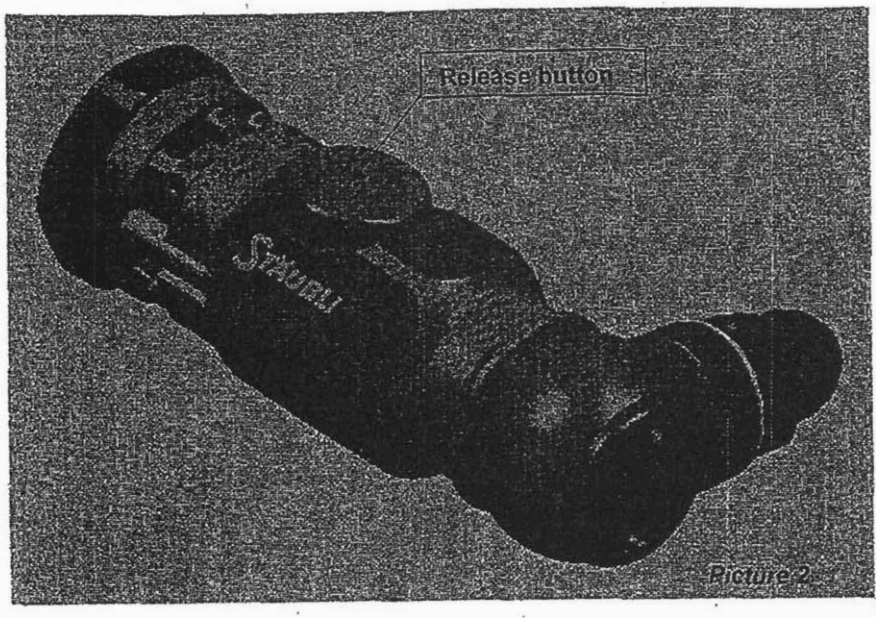

Picture 2

KEYING:

The connector will supply a total number of 35 non-interchangeable keys. The operator assembling the male and female connector sets all keys on site.

- **Male connector** (plug) setting is described on ***picture 1 and 3***. 3 screws take place among 7 possible locations (location number engraved on the body).
- **Female connector** (socket) setting works the opposite way using screws taking place in the remaining locations (location number engraved on the body).

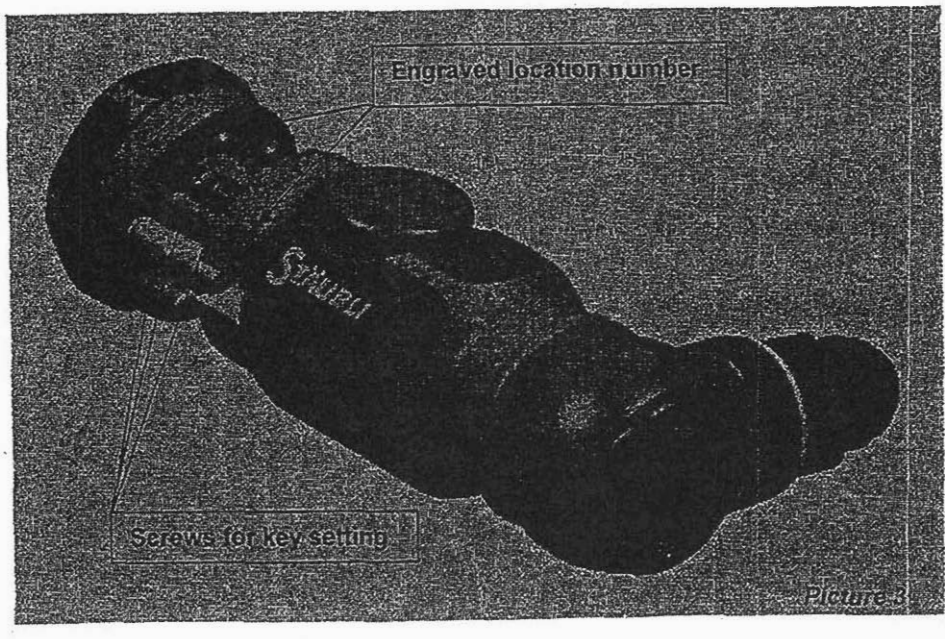

Picture 3

This document is the exclusive property of STAUBLI Corp. It is forbidden to use or comunicate the information of this document without written authorization.

Written : Pastore	Le : 28/01/05	Checked : Chappaz	Le : 28/01/05

STAUBLI | S | 111 610 04 | D

FITTINGS AND MOUNTING:

- **Female connector** (socket) has a male JIC DASH12 threaded end fitting. A rotating 90° backshell assembly allows a free angular positionning according to the 2 rotations axis ***(See picture 4)***
- **Male connector** (plug) has a female threaded connection with a 3/4" NPT.

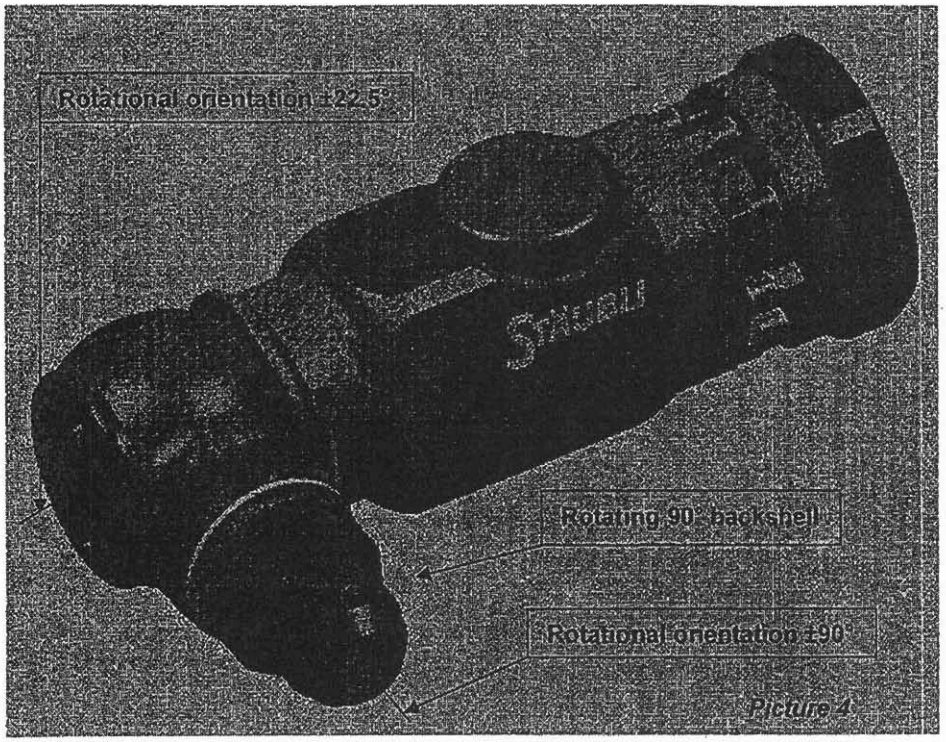

Picture 4

DUST CAP:

Disconnected plug will be protected with a dust cap.

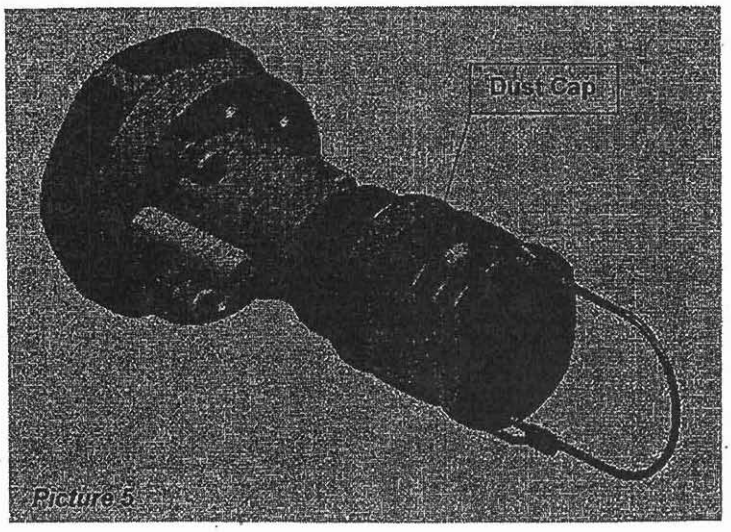

Picture 5

This document is the exclusive property of STAUBLI Corp. It is forbidden to use or comunicate the information of this document without written authorization.

Written : Pastore	Le : 28/01/05	Checked : Chappaz	Le : 28/01/05
STAUBLI	S	111 610 04	D

MATERIALS:

Mechanical connector is 316L stainless steel with ethylene propylene soft O-ring seals.

TECHNICAL FEATURES

• Working temperature	-25°C + 150°C (-4°F up to 302°F)
• Socket valving	unvalved
• Plug valving	unvalved (straight through bore)
• Seals lubrication	STÄUBLI G 0 lubricant (validated for use in nuclear environment by E.D.F)
• Plug weight	0.550 Kg (1.25 Lb)
• Socket weight	1.800Kg (3.97 Lb)
• Dust cap weight	0.300 Kg (0.66 Lb)
• Connection strength	80N (without pressure)
• Disconnection strength	90N (without pressure)
• Identification	Manufacturer's name, part number and week and year of manufacturing engraved on male and female connectors
• Packaging	Single unit in sealed plastic bag.

PARTNUMBERS

Part number	Description
N 011 611 04	Female connector
N 011 612 04	Male connector
N 001 130 05	Male connector dust cap

Stäubli reserves the right to modify product without prior notice.
This technical data sheet has been issue for a given job; therefore this document cannot be reproduced nor disclosed without Stäubli's written authorization.

This document is the exclusive property of STAUBLI Corp. It is forbidden to use or comunicate the information of this document without written authorization.

Written : Pastore	Le : 28/01/05	Checked : Chappaz	Le : 28/01/05

STÄUBLI S 111 610 04 D

T.2 Reboiler Grayloc Backing Plate

Design Input: It is acceptable design that the Grayloc backing plates for the 24" diameter process inlet of the reboilers FEP-RBLR-00001A/1B and TLP-RBLR-00001 can be installed after reboiler has after reboiler has been transported through airlock (inside hotcell). Furthermore, the Grayloc backing plate for the 18" diameter steam inlet of the reboiler TLP-RBLR-00001 can also be installed after the TLP reboiler has been through airlock.

T.3 Floor loading

Design Input: The uniform load is defined as floor loading transmitted by the skid to the floor without spreading of the load out through the supporting concrete slab. The floor loadings listed in the table below has been determined to be acceptable.

Allowable Uniform Floor Loading Directly Under Skid Footprint

Equipment	Location	Weight (Operating + Skid) (lbs)	Skid Foot Print Floor Area (ft^2)	Uniform Load (Operating) (lbs/ft^2)
FEP-SEP-00001A	J : 8-9 (0'-0")	134,500	400	**336**
FEP-SEP-00001B	J : 10-11 (0'-0")	134,500	400	**336**
TLP-SEP-00001	D : 18 (0'-0")	134,500	400	**336**
FEP Condenser Skid A	K-L : 8 (56'-0")	70,000	179	**391**
FEP Condenser Skid B	K-L : 10-11 (56'-0")	70,000	179	**391**
TLP Condenser Skid	D-E : 19-20 (56'-0")	70,000	179	**391**
FEP-VSL-00005	M : 7-8 (0'-0")	45,100	66	**683**
TLP-VSL-00002	B : 24-25 (0'-0")	24,000/4	1	**6000**
AFR-TK-00001	G-H : 9-10 (77'-0")	24,000	40	**600**
AFR Pump Skid	G-H : 9-10 (77'-0")	415	12	**35**

Note: Uniform load (lbs/ft^2) = Total Equipment Weight (lbs) / Foot Print Area (ft^2)

T.4 Surface Finish for Equipment in the Hot Cell

Design Input #1: A surface finish of 125 micro-inches is required for non-rotating parts such as reboiler, support stands, recirculation pump, recirculation piping, and lifting yokes. The surface finish of 125 micro inches shall be applied to machined surfaces not all surfaces

Design Input #2: A surface finish of 63 micro-inches is required for rotating parts such as pump shaft and impeller.

T.5 Manipulator Capability for Separator Vessel Head Crane

Design Input: There will be no manipulator capability for the crane on the 56-ft elevation for separator vessel head removal. The current plan is to install a monorail and hoist when there is a need to replace separator demister pads.

T.6 Axial Flow Pump ASDs

Design Input: The ASDs for FEP-PMP-00009A/9B will be installed in the MCC room P-417 on the 77'-0" elevation and the ASD for TLP-PMP-00009 will be installed in the MCC room P-0315 on the 56'-0" elevation. These MCC rooms are designed as R2/C2 as shown on the drawings 24590-PTF-P01T-00003 and 24590-PTF-P01T-00004. The temperature range for these MCC rooms is between 59-113 °F and the humidity range of 5 - 85 %.

T.7 Instrumentation

Design Input #1 - Final Instrument Location Drawings:

Seller is no longer required to provide instrument location and mounting information on the datasheet. Instrument location and mounting information will be completed by Buyer as required on the data sheets.

Design Input #2 - BNI Instrument Details:

Seller is no longer required to provide loop drawings that include schematic and wiring information. BNI will use Set Route and Intools for wiring information. For the 60% design stage, Seller is not required to provide environmental criteria, manufacturer or manufacturer's model number since they will be addressed at the 90% design milestone. Seller shall provide the following I&C information at 60% design:

1) An Instrument Index that includes the type of instrument, service description, calibration range, tag number, signal type, P&ID number and data sheet number.

2) Data Sheets as supplied with the contract package completed with as much information as is available, including tag numbers, calibration range, instrument range and specific process parameters, etc.

3) Logic diagrams which complement the system description.

T.8 Off-gas piping Condenser Intra-Skid Piping

Design Input: No insulation is required for off-gas piping and condenser intra-skid piping. These pipes are in restrictive rooms where no personnel enter during evaporator system operations.

T.9 Separator Vessels

Design Input #1: Separator Vessel Lower Frame:

No internal components are allowed except the use of Nelson studs on the lower ten inches of the inside surface. Seller shall provide minimum amount of grouting requirements to provide adequate stiffness for the lower frame of solid ring of 18-inches high and 19-feet square

Design Input #2: External Ring for Spray Nozzles:

Seller shall design and provide external rings for both the upper and lower demister pad spray nozzles. These external rings shall be connected together to provide an accessible connection at approximately 48'-0" plant elevation.

T.10 FEP Condensate vessel

Design Input: Seller shall provide a separate FEP condensate vessel support ring plate to interface properly with floor embeds. The ring plate will be field welded to embedded plates on both sides. Vessel skirt will be filed welded to ring plate at exterior face only with partial penetration and fillet welds.

T.11 Equivalent Lengths for Centrifugal Pumps

The piping equivalent length is provided on the table below for pump sizing calculation. Please be advised that the bounding values have incorporated the line size changes. However, the flow resistance due to flow restriction orifice, backpressure control valve, discharge spray nozzle has not incorporated into the bounding values because they are to be sized by Seller. Seller shall include these flow resistance in their pump sizing calculation.

For discharge lines from pumps TLP-PMP-00002A/B to separator vessel (TLP-SEP-00001) and from pumps FEP-PMP-00006A/B, FANP shall also add a flow resistance of 5 psi due to Millipore filter in the calculation. For discharge line from TLP-PMP-00005A/B to sampler, Seller shall also include sample delivery pressure of 5 psig.

	Description	From	To	Straight Runs	Elevation Change	Elbows (LR 90)	Eq. Length	Tees	Eq. Length	Valves	Eq. Length	Exits	Eq. Length	Entrances	Eq. Length	Other	Totals (ft) (EQ.L.)	Totals (ft) (ΔEL.)	Bounding Values (ft) (EQ.L.)	Bounding Values (ft) (ΔEL.)	Notes
TLP-PMP-00002A/B	Suction	TLP-VSL-00002	*Pump*	30	2	*5*	33	*1*	20	*4*	20	*0*	0	*1*	9	0	112	2	150	2	
	Discharge	*Pump*	TLP-VSL-00002	40	15	*5*	25	2	30	*4*	15	*1*	13	*0*	0	50	173	15	250	20	*1*
			RLD-TK-00006A/B	250	60	*25*	125	*4*	60	*8*	30	*1*	13	*0*	0	50	528	60	625	65	2
			TLP-VSL-00009A/B	250	60	*25*	125	*4*	60	*8*	30	*1*	13	*0*	0	50	528	60	625	65	2
			TLP-SEP-00001	250	60	*25*	125	3	45	*10*	38	*0*	0	*0*	0	50	508	60	600	65	*3, 4*
TLP-PMP-00011A/B	Suction	TLP-SEP-00001	*Pump*	100	5	*5*	25	*1*	15	*3*	11	*0*	0	*1*	7	0	158	5	250	5	
	Discharge	*Pump*	TCP-VSL-00002	300	60	*15*	50	*1*	10	*3*	8	*1*	9	*0*	0	0	376	60	450	65	
TLP-PMP-00005A/B	Suction	TLP-VSL-00009A/B	*Pump*	80	4	*8*	40	2	30	*5*	13	*0*	0	*1*	7	0	169	4	200	4	
	Discharge	*Pump*	TLP-SEP-00001	125	15	*15*	38	*3*	22.5	2	4	*1*	7	*0*	0	0	195	10	250	15	
			SAMPLER	180	70	*15*	50	2	20	3	8	*0*	0	*0*	0	0	258	70	300	70	*5*
FEP-PMP-00006A/B	Suction	FEP-VSL-00005	*Pump*	15	2	*5*	33	*1*	20	3	15	*0*	0	*1*	9	0	92	2	125	2	
	Discharge	*Pump*	FEP-VSL-00005	25	20	*7*	35	*2*	30	5	19	*1*	13	*0*	0	50	172	20	250	25	*1*
			RLD-TK-00006A/B	1100	60	*50*	250	*6*	90	*8*	30	*1*	13	*0*	0	50	1533	60	1750	65	*2*
			FEP-VSL-00017A/B	550	60	*35*	175	*4*	60	*6*	23	*1*	13	*0*	0	50	871	60	1000	65	*2*
			FEP-SEP-00001A/B	600	60	*35*	175	3	45	*10*	38	0	0	*0*	0	50	908	60	1100	65	*3, 4*

Notes: Framatome Needs to also consider flow resistances due to...
1. Flow Restriction Orifice (sized by FANP)
2. Back Pressure Control valve (sized by FANP)
3. Milli-pore filter (max dP = 5 psi)
4. Disharge spray nozzle pressure (specified by FANP)
5. Sample Delivery pressure of 5 psig.

T.12 Equivalent Lengths for Roth Transfer Station Pump

The equivalent length is provided in the table below:

Description	From	To	Bounding values (ft)	
			EQ. L	ΔEL
Discharge	FEP A SKID 9A Pump	SCW Storage Tank	2200	60
Discharge	FEP A SKID 9A Pump	Steam Cond. Skid 6A	600	80
Discharge	FEP B SKID 9B Pump	SCW Storage Tank	2000	60
Discharge	FEP B SKID 9A Pump	Steam Cond. Skid 6B	700	80
Discharge	TLP SKID Pump	SCW Storage Tank	720	60
Discharge	FEP B SKID 9A Pump	Steam Cond. Skid 8	1130	100

T.13 Standard Kick-Off Plate

Design Input: Buyer will provide Seller 2" and 4" PUREX nozzle with square standard kick-off plate per drawing 24590-WTP-M61-P23T-00040 for FEP/TLP reboilers.

APPENDIX U

Deleted

APPENDIX V

FEP/TLP EVAPORATOR SYSTEM COMPOSITE ANALYSES

V1. Seller shall perform a coupled dynamic analysis of each evaporator system (using stick models to represent all components, including the piping/process jumper, vessels, frames and pumps) to qualify the recirculation piping/process jumper, and offgas piping. Seller shall provide vessel nozzle loads, Grayloc loads, and all piping/jumper support interface loads. The evaporator system model shall include the separator vessel on its frames, reboiler in its frame, recirculation pump on its frame, all interconnecting large bore piping/jumpers but excluding branch piping, offgas piping, primary condenser and condenser frame (not including the vacuum system and other attachments).

V2. The coupled dynamic analysis shall be performed using the revised ISRS curves (provided in this appendix) and shall account for the seismic differential movement between 0' floor, 56' floor, and 77' floor (provided in this appendix). Requirements for determining the percent critical damping for the couple dynamic analysis is provided in ASCE Std 4 Section 3.1.5 "Modeling of Damping".

V3. All piping dimensions, weights (including grayloc/guide assemblies), and support locations (including fixity) for each evaporator system are provided on the Isometric drawings included in this appendix shall be used as the design inputs for the coupled dynamic analysis.

V4. Although Seller has provided estimated process temperatures for various system condition and components, Seller shall define and use the maximum operating temperature in lieu of design temperature for each evaporator system.

V5. See attachment #5 for FEP/TLP recirculation pump frame conceptual designs. Seller is responsible for qualifying all support structures above 1'-4" in elevation, including all interface plates, bolts, nuts, and dowel pins for reboiler support frame and pump support frame. Seller is responsible for providing all final frame member sizes and configuration, all weld and joint designs, dowel / bolting configuration, quantity of bolts /nuts, and frame calculations to be submitted to Buyer for review. Location of dowels and location / quantity of bolts shall be provided to Buyer for review and permission to proceed.

V5.1 Top of concrete filled steel frame elevation will be 1'-4"

V5.2 Concrete filled steel frame will be rigid, e.g. 33 hz or greater

V5.3 Top of sole plate shall be 2'-2" in plant elevation for pump support. Top of sole plate for reboiler shall be 2'-2 5/16". Bottom of pump support and reboiler support frame shall be designed to interface with the corresponding sole plate without the use of shims.

V5.4 Seller shall qualify structural steel between 1'-4" and 2'-2" or 2'-2 5/16". Seller must design all weld joints and provide all weld details to Buyer. Buyer will be responsible for remotability interface and fabrication drawings.

V5.5 There will be two 4" diameter Dowel Pins per frame (opposing corners) as shown on drawings which will take the shear loads. The 4" diameter dowel pin is an assumption. Seller is responsible to verify and size the dowel pin diameter with actual loads. All Dowel pin material shall be ASTM A582 Type 416.

V5.6 Seller shall qualify all plates, structural steel, dowel pins, the bolting interface, and all weld joint designs.

V5.7 Initial assumption, there are two bolts per plate. Bolts shall be 1 1/4" - 8 ACME - 2G. Stud material shall be ASTM A564 Type 630 condition H1150 and Nut material shall be ASTM A194 Grade GR 8S. Seller is to determine quantity and configuration for studs. Stud location shall be submitted to Buyer for review and permission to proceed. Note: Tightening torque from impact wrench is 400 ft-lbs ± 25%. Loosening torque from impact wrench is 700 ft-lbs ± 25%. Tightening and loosening torques are not adjustable, or variable over time.

V5.8 Seller shall qualify recirculation pump frame. Seller must design all weld joints and provide all weld details to Buyer. Seller shall provide detail design of the frame in the form of a drawing that includes member sizes, configuration and weld design. The drawing shall be sufficient for Buyer to solicit a fabricator who can generate fabrication drawings. Buyer will be responsible for remotability interface for pump frame.

V6. Seller shall perform detailed Finite Element Analysis uncoupled dynamic analysis using revised ISRS curves (provided in this appendix) of individual SC-I/SC-II vessel/equipment (including recirculation pumps) of each evaporator system. Internal components, supports, and piping systems shall be analyzed the same as the parent vessel/equipment.

V7. The report(s) shall be officially submitted to Bechtel for review per G321-E Category 8.0. The report(s) shall include pipe/jumper stress, nozzle loads, Grayloc loads, all piping/jumper support interface loads, pipe support design recommendations, and results of the coupled dynamic analysis of each evaporator system and FEA dynamic analyses for individual SC-I/SC-II components. Seller shall use the "SC-I/II Seismic Analysis Qualification and FEA Report Check List" provided in attachment #6 to document required data in their reports.

V8. Listed below are design inputs to be used

V8a. See Attachment #3 for 24" grayloc/guide assemblies design inputs provided on the isometric sketches.

V8b. Revised In-Structure Response Spectra curves (see Attachment #1)

- **RGM ISRS Figures 37, 38, 67, 68, and 24E for separator vessel (FEP-SEP-00001A/B &TLP-SEP-00001)**
- **RGM ISRS Figures 37, 38, and 121 for FEP condenser skids (FEP-SKID-00001A/B)**
- **RGM ISRS Figures 37, 38, 40, 41, and 115 for TLP condenser skid (TLP-SKID-00001)**
- **RGM ISRS Figures 21E, 22E, and 24E for reboilers (FEP-RBL-00001A/B & TLP-RBLR-00001). If the equipment support is not rigid, it shall be simulated or duplicated in the equipment seismic analysis model.**
- **RGM ISRS Figures 21E, 22E, and 24E for recirculation pumps (FEP-PMP-00009A/B & TLP-PMP-00001). If the equipment support is not rigid, it shall be simulated or duplicated in the equipment seismic analysis model.**

- **RGM ISRS Figures 6E, 7E, and 149 for off-gas piping FEP-PU-00001 and FEP-PU-00005 support hangers.**
- **RGM ISRS Figures 6E, 7E, and 137 for off-gas piping TLP-PU-00002 support hangers**

V8c. BNI TLP Coupled Structural Analysis Draft Report (See Attachment #2)

V8d. FEP/TLP Evaporator recirculation Isometrics and Mid Roller details (see Attachment #3)

V8e. Nozzle loading for separator vessels shall be based on actual values as listed in tables 1, 2, and 3 of Attachment #4. The Seller shall use the actual nozzle load values instead of the values shown in the table in Appendix A of the Pressure Vessel Design and Fabrication Specification, 24590-WTP-3PS-MV00-T0001. The thermal reduction factor found in 24590-WTP-3PS-MV00-T0001, Section 3.7.4, shall not be applied. The nozzle load for separator vessel offgas outlet nozzle (N04), discharge nozzle (N10) and inlet nozzle (N11) shall be per Seller's design & qualification using the results of the coupled FEA. Nozzle loads for separator vessel bubblers (N01, N02, N03, N08, N09, N21, N27, and N28) due to hydrogen accumulation are not available and will be provided later.

V8f. Nozzle loading for condenser vessels (FEP-COND-00001A/1B/2A/2B/3A/3B and TLP-COND-00001/2/3) shall be based on nozzle design loads for non-black cell vessels provided in table 4 of Attachment #4. The Seller shall use these nozzle load values instead of the values shown in the table in Appendix A of the Pressure Vessel Design and Fabrication Specification, 24590-WTP-3PS-MV00-T0001. The thermal reduction factor found in 24590-WTP-3PS-MV00-T0001, Section 3.7.4, shall not be applied. The primary condenser offgas inlet nozzle (N01) shall be per Seller's design and qualification using the results of the coupled FEA.

V8g. Nozzle loading for reboiler vessels (FEP-RBLR-00001A/1B and TLP-RBLR-00001) shall be based on nozzle design loads for non-black cell vessels provided in Table 4 and Table 5 (for steam nozzle NO3) of Attachment #4. The Seller shall use these nozzle load values instead of the values shown in the table in Appendix A of the Pressure Vessel Design and Fabrication Specification, 24590-WTP-3PS-MV00-T0001. The thermal reduction factor found in 24590-WTP-3PS-MV00-T0001, Section 3.7.4, shall not be applied. The reboiler process inlet nozzle (N01) and outlet nozzle (N02) shall be per Seller's design and qualification using the results of the coupled FEA.

V8h. Nozzle loads for recirculation pumps shall be per Seller's design & qualification using the results of the coupled FEA.

V8i. For TLP-SEP-00001,

a. The relative floor movement at location Row D/Column 18 at elevation 0' to location Row D/Column 18 at elevation 56' is: 0.06" EW; 0.23" NS, and 0.03" vertical

b. The relative floor movement at location Row D/Column 18 at elevation 77' to location Row D/Column 18 at elevation 56' is: 0.04" EW; 0.12" NS, and 0.12" vertical

V8j. For FEP-SEP-00001A,

a. The relative floor movement at location Row J/Column 8.8 at elevation 0' to location Row J/Column 8.8 at elevation 56' is: 0.06" EW; 0.20" NS, and 0.08" vertical

b. The relative floor movement at location Row J/Column 8.8 at elevation 77' to location Row J/Column 8.8 at elevation 56' is: 0.04" EW; 0.08" NS, and 0.12" vertical

V8k. For FEP-SEP-00001B

a. The relative floor movement at location Row J/Column 10.5 at elevation 0' to location Row J/Column 10.5 at elevation 56' is: 0.06" EW; 0.21" NS, and 0.05" vertical

b. The relative floor movement at location Row J/Column 10.5 at elevation 77' to location Row J/Column 10.5 at elevation 56' is: 0.05" EW; 0.09" NS, and 0.11" vertical

V8L. FEP/TLP recirculation pump frame conceptual design (See attachment #5).

ATTACHMENT #1

Revised ISRS Curves
(Ref. CCN 128490 and CCN 138088)

RPP-WTP Pretreatment Facility ISRS
Calc No.: 24590-PTF-S0C-S15T-00005, Rev. 0B

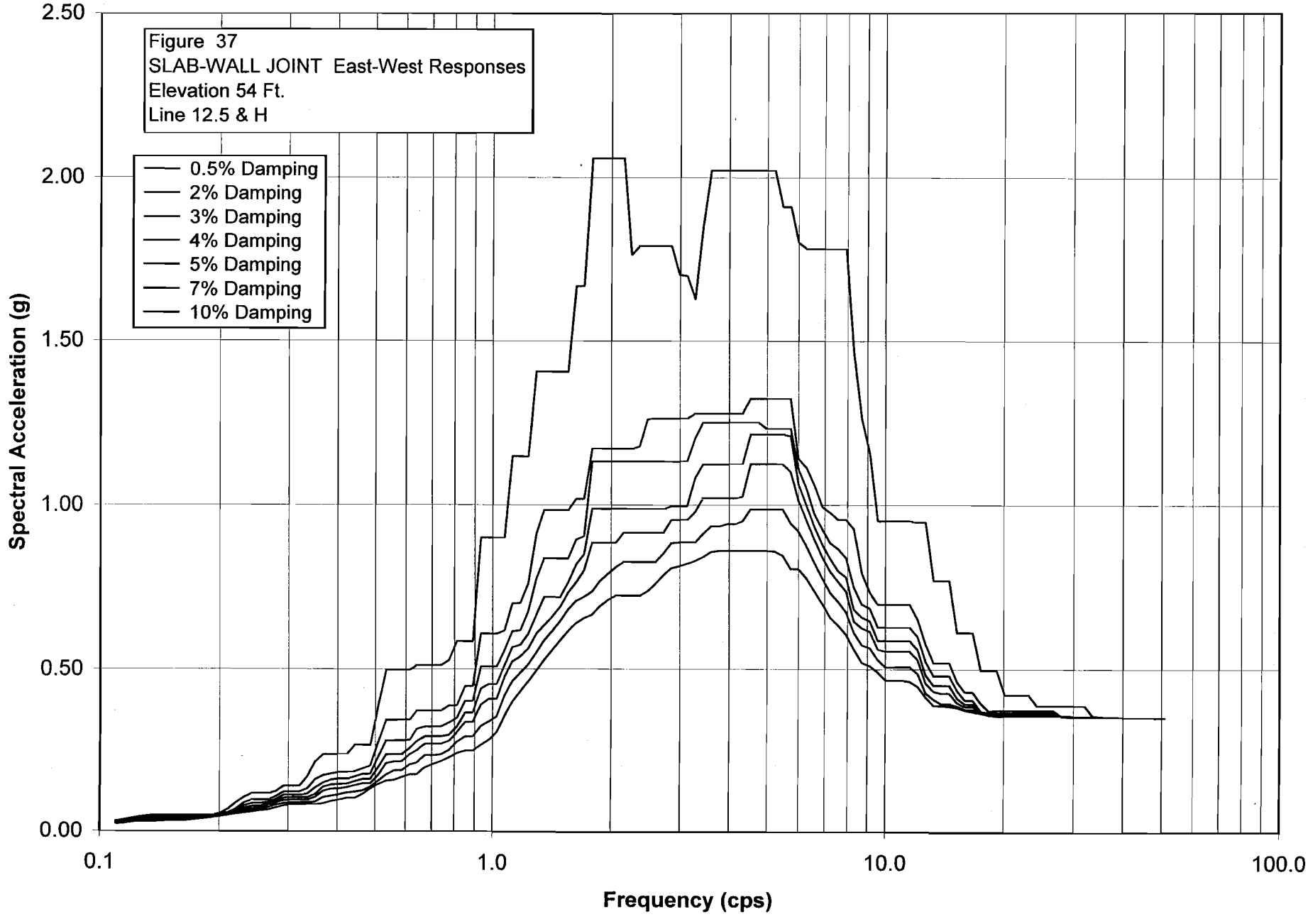

S_PTWW037.grf
RPP-WTP Pretreatment Facility ISRS
Calc No.: 24590-PTF-S0C-S15T-00005, Rev. 0B
Frequency (cps)
Spectral Acceleration (g)
Figure 37
SLAB-WALL JOINT East-West Responses
Elevation 54 Ft.
Line 12.5 & H

Damping	0.50%	Damping	2%	Damping	3%	Damping	4%	Damping	5%	Damping	7%	Damping	10%
Freq.	Accel.	Freq.	Accel.	Freq.	Accel.	Freq.	Accel.	Freq.	Accel.	Freq.	Accel.	Freq.	Accel.
0.1098	0.0314	0.1098	0.0288	0.1098	0.0276	0.1098	0.0268	0.1098	0.0261	0.1098	0.0248	0.1098	0.0232
0.115	0.0359	0.115	0.0331	0.115	0.0315	0.115	0.0301	0.115	0.029	0.115	0.0275	0.115	0.0254
0.1204	0.041	0.1204	0.0383	0.1204	0.0367	0.1204	0.0353	0.1204	0.034	0.1204	0.0316	0.1204	0.0288
0.1262	0.046	0.1262	0.0427	0.1262	0.0408	0.1262	0.0389	0.1262	0.0373	0.1262	0.0344	0.1262	0.0312
0.1322	0.0489	0.1322	0.0443	0.1322	0.0422	0.1322	0.0403	0.1322	0.0386	0.1322	0.0356	0.1322	0.0321
0.1385	0.0518	0.1385	0.0463	0.1385	0.0431	0.1385	0.0403	0.1385	0.0386	0.1385	0.0356	0.1385	0.0321
0.1451	0.0518	0.1451	0.0463	0.1451	0.0431	0.1451	0.0403	0.1451	0.0386	0.1451	0.0356	0.1451	0.0321
0.152	0.0518	0.152	0.0463	0.152	0.0431	0.152	0.0403	0.152	0.0386	0.152	0.0356	0.152	0.0321
0.1592	0.0518	0.1592	0.0463	0.1592	0.0431	0.1592	0.0403	0.1592	0.0386	0.1592	0.0356	0.1592	0.0324
0.1668	0.0518	0.1668	0.0463	0.1668	0.0431	0.1668	0.0403	0.1668	0.0384	0.1668	0.0362	0.1668	0.0351
0.1748	0.0518	0.1748	0.0463	0.1748	0.0431	0.1748	0.0409	0.1748	0.0404	0.1748	0.0394	0.1748	0.0379
0.1831	0.0518	0.1831	0.0463	0.1831	0.0454	0.1831	0.0447	0.1831	0.044	0.1831	0.0426	0.1831	0.0405
0.1918	0.0521	0.1918	0.0505	0.1918	0.0495	0.1918	0.0485	0.1918	0.0476	0.1918	0.0458	0.1918	0.0437
0.2009	0.0569	0.2009	0.0549	0.2009	0.0536	0.2009	0.0525	0.2009	0.0514	0.2009	0.0497	0.2009	0.0474
0.2105	0.0708	0.2105	0.0601	0.2105	0.0587	0.2105	0.0574	0.2105	0.0562	0.2105	0.054	0.2105	0.0517
0.2205	0.091	0.2205	0.0714	0.2205	0.0643	0.2205	0.0624	0.2205	0.061	0.2205	0.0586	0.2205	0.0558
0.231	0.1079	0.231	0.0908	0.231	0.0814	0.231	0.0735	0.231	0.0672	0.231	0.0631	0.231	0.0594
0.242	0.1195	0.242	0.0993	0.242	0.0884	0.242	0.0793	0.242	0.0716	0.242	0.0666	0.242	0.062
0.2535	0.1204	0.2535	0.0993	0.2535	0.0884	0.2535	0.0797	0.2535	0.0755	0.2535	0.0695	0.2535	0.0658
0.2656	0.1204	0.2656	0.0993	0.2656	0.0923	0.2656	0.088	0.2656	0.084	0.2656	0.0769	0.2656	0.0687
0.2783	0.1255	0.2783	0.1097	0.2783	0.1008	0.2783	0.095	0.2783	0.0907	0.2783	0.0836	0.2783	0.0755
0.2915	0.1424	0.2915	0.1248	0.2915	0.1148	0.2915	0.106	0.2915	0.0982	0.2915	0.0888	0.2915	0.0813
0.3054	0.1424	0.3054	0.1248	0.3054	0.1152	0.3054	0.1069	0.3054	0.0996	0.3054	0.091	0.3054	0.0842
0.3199	0.1424	0.3199	0.1248	0.3199	0.1152	0.3199	0.1069	0.3199	0.0996	0.3199	0.091	0.3199	0.0847
0.3352	0.1711	0.3352	0.1346	0.3352	0.1186	0.3352	0.1069	0.3352	0.0996	0.3352	0.091	0.3352	0.0847
0.3511	0.2174	0.3511	0.1631	0.3511	0.137	0.3511	0.1169	0.3511	0.1078	0.3511	0.0932	0.3511	0.0847
0.3678	0.2401	0.3678	0.1757	0.3678	0.1532	0.3678	0.1396	0.3678	0.1277	0.3678	0.108	0.3678	0.0887

S_PTWW037.grf

0.3853	0.2401	0.3853	0.1802	0.3853	0.1621	0.3853	0.1466	0.3853	0.1334	0.3853	0.1123	0.3853	0.0951
0.4037	0.2401	0.4037	0.1853	0.4037	0.165	0.4037	0.1482	0.4037	0.1342	0.4037	0.1165	0.4037	0.0995
0.4229	0.2401	0.4229	0.1853	0.4229	0.165	0.4229	0.1498	0.4229	0.1383	0.4229	0.122	0.4229	0.1052
0.4431	0.2697	0.4431	0.1872	0.4431	0.1712	0.4431	0.1571	0.4431	0.1446	0.4431	0.1243	0.4431	0.1052
0.4642	0.2697	0.4642	0.1964	0.4642	0.1791	0.4642	0.1638	0.4642	0.1504	0.4642	0.128	0.4642	0.1176
0.4863	0.2697	0.4863	0.2048	0.4863	0.1795	0.4863	0.1638	0.4863	0.1504	0.4863	0.1397	0.4863	0.1335
0.5094	0.3933	0.5094	0.2804	0.5094	0.2338	0.5094	0.2006	0.5094	0.1758	0.5094	0.1597	0.5094	0.1485
0.5337	0.498	0.5337	0.3467	0.5337	0.2831	0.5337	0.2392	0.5337	0.2125	0.5337	0.1765	0.5337	0.159
0.5591	0.498	0.5591	0.3467	0.5591	0.2831	0.5591	0.2392	0.5591	0.2173	0.5591	0.1897	0.5591	0.1607
0.5857	0.498	0.5857	0.3467	0.5857	0.2831	0.5857	0.2392	0.5857	0.2173	0.5857	0.1897	0.5857	0.1683
0.6136	0.498	0.6136	0.3467	0.6136	0.2856	0.6136	0.2598	0.6136	0.2393	0.6136	0.2082	0.6136	0.1768
0.6428	0.5114	0.6428	0.3731	0.6428	0.3181	0.6428	0.2803	0.6428	0.2522	0.6428	0.2127	0.6428	0.1768
0.6734	0.5114	0.6734	0.3731	0.6734	0.3249	0.6734	0.296	0.6734	0.2724	0.6734	0.236	0.6734	0.1983
0.7055	0.5114	0.7055	0.3731	0.7055	0.3249	0.7055	0.296	0.7055	0.2724	0.7055	0.236	0.7055	0.2086
0.7391	0.5114	0.7391	0.3731	0.7391	0.3249	0.7391	0.296	0.7391	0.2724	0.7391	0.239	0.7391	0.2174
0.7743	0.528	0.7743	0.3894	0.7743	0.3374	0.7743	0.3002	0.7743	0.2812	0.7743	0.2527	0.7743	0.2293
0.8111	0.5842	0.8111	0.3894	0.8111	0.3513	0.8111	0.3253	0.8111	0.3078	0.8111	0.2783	0.8111	0.2431
0.8497	0.5842	0.8497	0.4479	0.8497	0.4022	0.8497	0.367	0.8497	0.3388	0.8497	0.2955	0.8497	0.2503
0.8902	0.5842	0.8902	0.4479	0.8902	0.4022	0.8902	0.367	0.8902	0.3388	0.8902	0.2955	0.8902	0.2503
0.9326	0.8989	0.9326	0.6071	0.9326	0.5073	0.9326	0.4398	0.9326	0.3912	0.9326	0.3262	0.9326	0.2684
0.977	0.8989	0.977	0.6071	0.977	0.5073	0.977	0.4541	0.977	0.4086	0.977	0.3405	0.977	0.2839
1.0235	0.8989	1.0235	0.6071	1.0235	0.5073	1.0235	0.4541	1.0235	0.4086	1.0235	0.3559	1.0235	0.3074
1.0723	0.8989	1.0723	0.6169	1.0723	0.5578	1.0723	0.512	1.0723	0.4768	1.0723	0.4199	1.0723	0.3581
1.1233	1.1502	1.1233	0.6991	1.1233	0.614	1.1233	0.5663	1.1233	0.5238	1.1233	0.4629	1.1233	0.4004
1.1768	1.1502	1.1768	0.7013	1.1768	0.6178	1.1768	0.574	1.1768	0.5383	1.1768	0.4888	1.1768	0.4326
1.2328	1.1502	1.2328	0.7596	1.2328	0.6754	1.2328	0.6064	1.2328	0.5615	1.2328	0.5147	1.2328	0.4624
1.2916	1.4068	1.2916	0.9098	1.2916	0.7736	1.2916	0.6645	1.2916	0.6073	1.2916	0.5502	1.2916	0.4952
1.353	1.4068	1.353	0.9837	1.353	0.8352	1.353	0.7185	1.353	0.6331	1.353	0.5866	1.353	0.5279
1.4175	1.4068	1.4175	0.9837	1.4175	0.8352	1.4175	0.7185	1.4175	0.6595	1.4175	0.6157	1.4175	0.5573
1.485	1.4068	1.485	0.9837	1.485	0.8352	1.485	0.7185	1.485	0.6887	1.485	0.6451	1.485	0.5868
1.5557	1.4068	1.5557	0.9837	1.5557	0.8352	1.5557	0.7621	1.5557	0.7323	1.5557	0.6811	1.5557	0.6154
1.6298	1.6671	1.6298	1.0185	1.6298	0.8939	1.6298	0.8172	1.6298	0.764	1.6298	0.7078	1.6298	0.6397
1.7074	1.6671	1.7074	1.0185	1.7074	0.9033	1.7074	0.8484	1.7074	0.8	1.7074	0.7196	1.7074	0.6548
1.7887	2.06	1.7887	1.175	1.7887	1.1351	1.7887	0.9877	1.7887	0.8836	1.7887	0.7359	1.7887	0.6657
1.8738	2.06	1.8738	1.175	1.8738	1.1351	1.8738	0.9877	1.8738	0.8836	1.8738	0.767	1.8738	0.691
1.963	2.06	1.963	1.175	1.963	1.1351	1.963	0.9877	1.963	0.8836	1.963	0.7893	1.963	0.7111
2.0565	2.06	2.0565	1.175	2.0565	1.1351	2.0565	0.9877	2.0565	0.8836	2.0565	0.809	2.0565	0.7233
2.1544	2.06	2.1544	1.175	2.1544	1.1351	2.1544	0.9877	2.1544	0.9145	2.1544	0.8248	2.1544	0.7233
2.257	1.7633	2.257	1.175	2.257	1.1351	2.257	0.9877	2.257	0.9145	2.257	0.8248	2.257	0.7233

S_PTWW037.grf

2.3645	1.7905	2.3645	1.1812	2.3645	1.1351	2.3645	0.9877	2.3645	0.9145	2.3645	0.8248	2.3645	0.7233
2.4771	1.7905	2.4771	1.2641	2.4771	1.1351	2.4771	0.9877	2.4771	0.9145	2.4771	0.8248	2.4771	0.7363
2.595	1.7905	2.595	1.2669	2.595	1.1351	2.595	0.9877	2.595	0.9145	2.595	0.8248	2.595	0.7588
2.7186	1.7905	2.7186	1.2669	2.7186	1.1351	2.7186	0.9877	2.7186	0.9145	2.7186	0.8512	2.7186	0.7851
2.848	1.7905	2.848	1.2669	2.848	1.1351	2.848	0.9964	2.848	0.9535	2.848	0.8827	2.848	0.8066
2.9836	1.7027	2.9836	1.2669	2.9836	1.1351	2.9836	0.9964	2.9836	0.9535	2.9836	0.8849	2.9836	0.8127
3.1257	1.6996	3.1257	1.2669	3.1257	1.1351	3.1257	0.9964	3.1257	0.9535	3.1257	0.8849	3.1257	0.8201
3.2745	1.6283	3.2745	1.2808	3.2745	1.2073	3.2745	1.0843	3.2745	0.9787	3.2745	0.885	3.2745	0.8282
3.4305	1.8505	3.4305	1.2808	3.4305	1.2545	3.4305	1.1266	3.4305	1.0213	3.4305	0.9111	3.4305	0.8401
3.5938	2.0228	3.5938	1.2808	3.5938	1.2545	3.5938	1.1266	3.5938	1.0213	3.5938	0.9346	3.5938	0.8563
3.7649	2.0228	3.7649	1.2808	3.7649	1.2545	3.7649	1.1266	3.7649	1.0213	3.7649	0.9346	3.7649	0.8595
3.9442	2.0228	3.9442	1.2808	3.9442	1.2545	3.9442	1.1266	3.9442	1.0213	3.9442	0.9409	3.9442	0.8595
4.132	2.0228	4.132	1.2808	4.132	1.2545	4.132	1.1266	4.132	1.0213	4.132	0.9409	4.132	0.8598
4.3288	2.0228	4.3288	1.2808	4.3288	1.2545	4.3288	1.1266	4.3288	1.0265	4.3288	0.9503	4.3288	0.8598
4.5349	2.0228	4.5349	1.3256	4.5349	1.2545	4.5349	1.2184	4.5349	1.1271	4.5349	0.987	4.5349	0.8598
4.7508	2.0228	4.7508	1.3256	4.7508	1.2545	4.7508	1.2184	4.7508	1.1271	4.7508	0.987	4.7508	0.8598
4.977	2.0228	4.977	1.3256	4.977	1.2365	4.977	1.2184	4.977	1.1271	4.977	0.987	4.977	0.8598
5.214	2.0228	5.214	1.3256	5.214	1.2365	5.214	1.2184	5.214	1.1271	5.214	0.987	5.214	0.8574
5.4623	1.9118	5.4623	1.3256	5.4623	1.2365	5.4623	1.2184	5.4623	1.1271	5.4623	0.987	5.4623	0.8452
5.7224	1.9118	5.7224	1.3256	5.7224	1.2365	5.7224	1.2141	5.7224	1.103	5.7224	0.944	5.7224	0.8044
5.9948	1.8019	5.9948	1.1437	5.9948	1.1117	5.9948	1.0649	5.9948	1.0143	5.9948	0.919	5.9948	0.8044
6.2803	1.7825	6.2803	1.1158	6.2803	1.0505	6.2803	0.9983	6.2803	0.9528	6.2803	0.8733	6.2803	0.7753
6.5793	1.7825	6.5793	1.0616	6.5793	0.9721	6.5793	0.9326	6.5793	0.8937	6.5793	0.8232	6.5793	0.7371
6.8926	1.7825	6.8926	0.9948	6.8926	0.9254	6.8926	0.8781	6.8926	0.8395	6.8926	0.7757	6.8926	0.6988
7.2208	1.7825	7.2208	0.9766	7.2208	0.8836	7.2208	0.8362	7.2208	0.7973	7.2208	0.7333	7.2208	0.6574
7.5646	1.7825	7.5646	0.9553	7.5646	0.8653	7.5646	0.7978	7.5646	0.7657	7.5646	0.7059	7.5646	0.6333
7.9248	1.7825	7.9248	0.9553	7.9248	0.8374	7.9248	0.7789	7.9248	0.7357	7.9248	0.6724	7.9248	0.6047
8.3022	1.467	8.3022	0.9256	8.3022	0.7482	8.3022	0.6811	8.3022	0.6451	8.3022	0.6114	8.3022	0.5606
8.6975	1.2634	8.6975	0.7906	8.6975	0.6976	8.6975	0.6577	8.6975	0.6254	8.6975	0.5739	8.6975	0.5206
9.1116	1.1614	9.1116	0.734	9.1116	0.6851	9.1116	0.6466	9.1116	0.6147	9.1116	0.5644	9.1116	0.5109
9.5455	0.9513	9.5455	0.6972	9.5455	0.6272	9.5455	0.5869	9.5455	0.5603	9.5455	0.5292	9.5455	0.4915
10	0.9513	10	0.6972	10	0.6272	10	0.5869	10	0.5545	10	0.5075	10	0.4672
10.4762	0.9513	10.4762	0.6972	10.4762	0.6272	10.4762	0.5869	10.4762	0.5545	10.4762	0.5075	10.4762	0.4672
10.975	0.9513	10.975	0.6972	10.975	0.6272	10.975	0.5869	10.975	0.5545	10.975	0.5075	10.975	0.4672
11.4976	0.9513	11.4976	0.6972	11.4976	0.6272	11.4976	0.5869	11.4976	0.5545	11.4976	0.5075	11.4976	0.4637
12.045	0.9476	12.045	0.6512	12.045	0.5986	12.045	0.559	12.045	0.529	12.045	0.4872	12.045	0.4481
12.6186	0.9476	12.6186	0.5757	12.6186	0.5238	12.6186	0.4831	12.6186	0.4585	12.6186	0.4288	12.6186	0.4166
13.2194	0.7684	13.2194	0.5197	13.2194	0.4807	13.2194	0.452	13.2194	0.4333	13.2194	0.4097	13.2194	0.3907
13.8489	0.7684	13.8489	0.5197	13.8489	0.4807	13.8489	0.4508	13.8489	0.4275	13.8489	0.3956	13.8489	0.39

S_PTWW037.grf

14.5083	0.7684	14.5083	0.5197	14.5083	0.4807	14.5083	0.4508	14.5083	0.4275	14.5083	0.3953	14.5083	0.3877
15.1991	0.6109	15.1991	0.462	15.1991	0.4357	15.1991	0.4127	15.1991	0.3986	15.1991	0.389	15.1991	0.3834
15.9228	0.6109	15.9228	0.4312	15.9228	0.4068	15.9228	0.3944	15.9228	0.3869	15.9228	0.3787	15.9228	0.3756
16.681	0.6109	16.681	0.4312	16.681	0.4068	16.681	0.3944	16.681	0.3869	16.681	0.3781	16.681	0.371
17.4753	0.4963	17.4753	0.3971	17.4753	0.3731	17.4753	0.3731	17.4753	0.3729	17.4753	0.3709	17.4753	0.367
18.3074	0.4963	18.3074	0.3731	18.3074	0.3686	18.3074	0.3667	18.3074	0.3656	18.3074	0.3639	18.3074	0.3615
19.1791	0.4963	19.1791	0.3752	19.1791	0.3678	19.1791	0.3639	19.1791	0.3615	19.1791	0.3592	19.1791	0.3588
20.0923	0.4216	20.0923	0.3752	20.0923	0.3678	20.0923	0.3639	20.0923	0.3615	20.0923	0.3593	20.0923	0.3585
21.049	0.4216	21.049	0.3752	21.049	0.3678	21.049	0.3639	21.049	0.362	21.049	0.3611	21.049	0.3597
22.0513	0.4216	22.0513	0.3757	22.0513	0.3701	22.0513	0.3666	22.0513	0.3643	22.0513	0.3616	22.0513	0.3597
23.1013	0.4216	23.1013	0.3757	23.1013	0.3701	23.1013	0.3666	23.1013	0.3643	23.1013	0.3616	23.1013	0.3597
24.2013	0.3898	24.2013	0.3757	24.2013	0.3701	24.2013	0.3666	24.2013	0.3643	24.2013	0.3616	24.2013	0.3597
25.3536	0.3898	25.3536	0.3757	25.3536	0.3701	25.3536	0.3666	25.3536	0.3643	25.3536	0.3616	25.3536	0.3597
26.5609	0.3898	26.5609	0.3757	26.5609	0.3701	26.5609	0.3666	26.5609	0.3643	26.5609	0.3616	26.5609	0.3596
27.8256	0.3898	27.8256	0.3593	27.8256	0.357	27.8256	0.358	27.8256	0.3585	27.8256	0.3585	27.8256	0.3579
29.1505	0.3898	29.1505	0.3593	29.1505	0.357	29.1505	0.3561	29.1505	0.3559	29.1505	0.3559	29.1505	0.3561
30.5386	0.3898	30.5386	0.3564	30.5386	0.356	30.5386	0.3557	30.5386	0.3555	30.5386	0.3552	30.5386	0.3549
31.9927	0.3898	31.9927	0.3564	31.9927	0.356	31.9927	0.3557	31.9927	0.3555	31.9927	0.3552	31.9927	0.3549
33.516	0.3588	33.516	0.3564	33.516	0.356	33.516	0.3557	33.516	0.3555	33.516	0.3552	33.516	0.3549
35.1119	0.3567	35.1119	0.3563	35.1119	0.356	35.1119	0.3557	35.1119	0.3555	35.1119	0.3552	35.1119	0.3549
36.7838	0.3557	36.7838	0.3556	36.7838	0.3555	36.7838	0.3553	36.7838	0.3552	36.7838	0.355	36.7838	0.3548
38.5353	0.3551	38.5353	0.355	38.5353	0.3549	38.5353	0.3549	38.5353	0.3548	38.5353	0.3547	38.5353	0.3546
40.3702	0.3546	40.3702	0.3545	40.3702	0.3545	40.3702	0.3544	40.3702	0.3544	40.3702	0.3543	40.3702	0.3543
42.2924	0.3541	42.2924	0.3541	42.2924	0.3541	42.2924	0.354	42.2924	0.354	42.2924	0.354	42.2924	0.3539
44.3062	0.3537	44.3062	0.3537	44.3062	0.3537	44.3062	0.3537	44.3062	0.3537	44.3062	0.3537	44.3062	0.3536
46.4159	0.3534	46.4159	0.3534	46.4159	0.3534	46.4159	0.3534	46.4159	0.3534	46.4159	0.3534	46.4159	0.3533
48.626	0.3531	48.626	0.3531	48.626	0.3531	48.626	0.353	48.626	0.353	48.626	0.353	48.626	0.3531
50.9414	0.3528	50.9414	0.3528	50.9414	0.3528	50.9414	0.3528	50.9414	0.3528	50.9414	0.3528	50.9414	0.3528

RPP-WTP Pretreatment Facility ISRS
Calc No.: 24590-PTF-S0C-S15T-00005, Rev. 0B

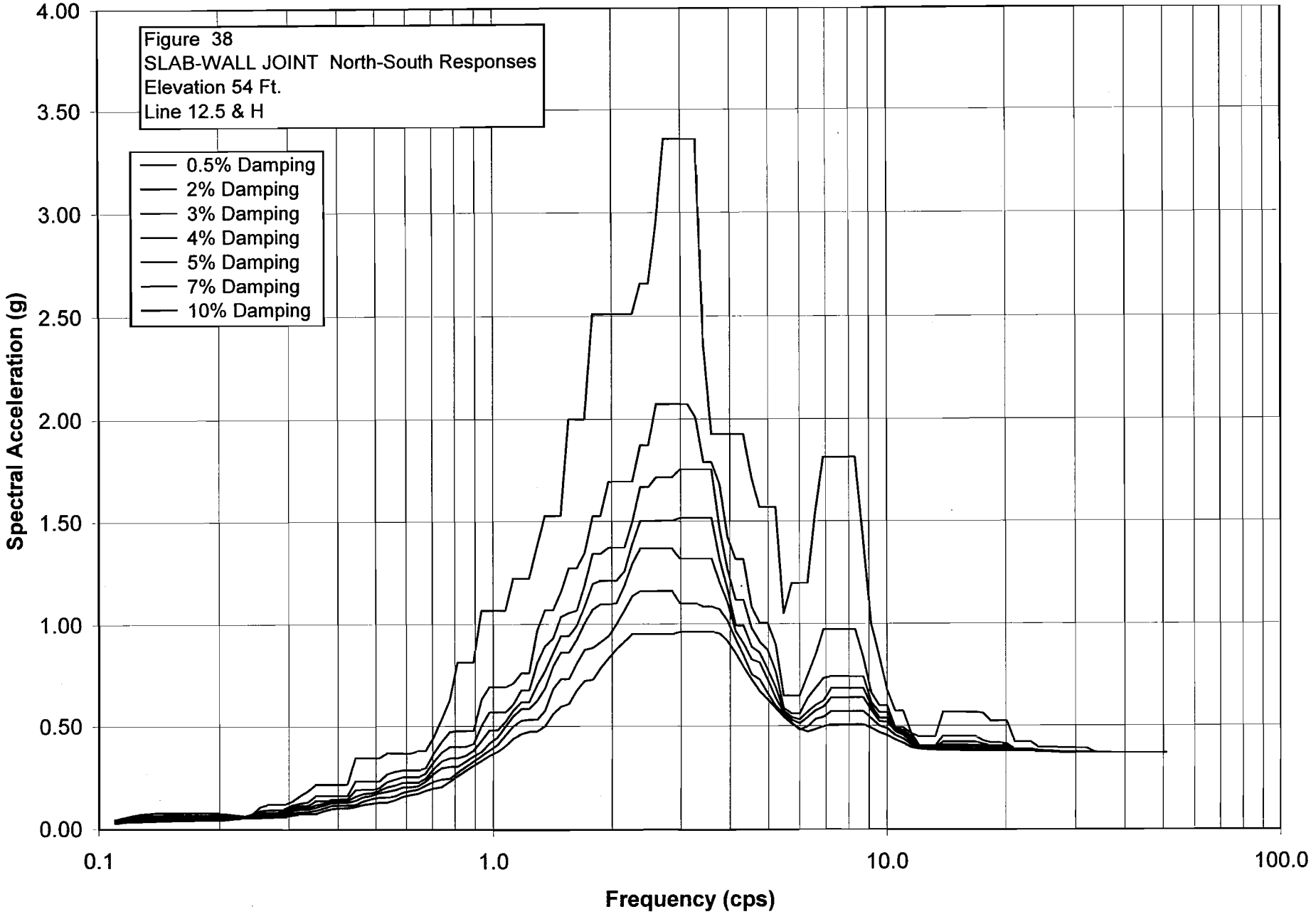

S_PTWW038.grf
RPP-WTP Pretreatment Facility ISRS
Calc No.: 24590-PTF-S0C-S15T-00005, Rev. 0B
Frequency (cps)
Spectral Acceleration (g)
Figure 38
SLAB-WALL JOINT North-South Responses
Elevation 54 Ft.
Line 12.5 & H

Damping	0.50%	Damping	2%	Damping	3%	Damping	4%	Damping	5%	Damping	7%	Damping	10%
Freq.	Accel.	Freq.	Accel.	Freq.	Accel.	Freq.	Accel.	Freq.	Accel.	Freq.	Accel.	Freq.	Accel.
0.1098	0.0457	0.1098	0.0394	0.1098	0.0365	0.1098	0.0345	0.1098	0.0331	0.1098	0.0312	0.1098	0.0286
0.115	0.0556	0.115	0.0494	0.115	0.0467	0.115	0.0443	0.115	0.0422	0.115	0.0384	0.115	0.0338
0.1204	0.0648	0.1204	0.0583	0.1204	0.0546	0.1204	0.0512	0.1204	0.0481	0.1204	0.0428	0.1204	0.0365
0.1262	0.072	0.1262	0.0618	0.1262	0.0572	0.1262	0.0533	0.1262	0.0498	0.1262	0.0438	0.1262	0.0384
0.1322	0.0763	0.1322	0.0653	0.1322	0.0604	0.1322	0.0565	0.1322	0.053	0.1322	0.0471	0.1322	0.0404
0.1385	0.0786	0.1385	0.0673	0.1385	0.0609	0.1385	0.0565	0.1385	0.053	0.1385	0.0471	0.1385	0.0404
0.1451	0.0789	0.1451	0.0675	0.1451	0.0612	0.1451	0.0565	0.1451	0.053	0.1451	0.0471	0.1451	0.0412
0.152	0.0789	0.152	0.0675	0.152	0.0612	0.152	0.0568	0.152	0.0538	0.152	0.0487	0.152	0.0434
0.1592	0.0789	0.1592	0.0675	0.1592	0.0612	0.1592	0.0568	0.1592	0.0538	0.1592	0.049	0.1592	0.0442
0.1668	0.0789	0.1668	0.0675	0.1668	0.0612	0.1668	0.0568	0.1668	0.0538	0.1668	0.049	0.1668	0.0442
0.1748	0.0789	0.1748	0.0675	0.1748	0.0612	0.1748	0.0568	0.1748	0.0538	0.1748	0.049	0.1748	0.0442
0.1831	0.0789	0.1831	0.0675	0.1831	0.0612	0.1831	0.0568	0.1831	0.0538	0.1831	0.049	0.1831	0.0442
0.1918	0.0789	0.1918	0.0675	0.1918	0.0612	0.1918	0.0564	0.1918	0.0535	0.1918	0.049	0.1918	0.0442
0.2009	0.0789	0.2009	0.0675	0.2009	0.0612	0.2009	0.0564	0.2009	0.0534	0.2009	0.0483	0.2009	0.0442
0.2105	0.0737	0.2105	0.0634	0.2105	0.0597	0.2105	0.0564	0.2105	0.0534	0.2105	0.0495	0.2105	0.0481
0.2205	0.0686	0.2205	0.0626	0.2205	0.0591	0.2205	0.0563	0.2205	0.0553	0.2205	0.0536	0.2205	0.0518
0.231	0.0653	0.231	0.063	0.231	0.0616	0.231	0.0604	0.231	0.0592	0.231	0.0573	0.231	0.0552
0.242	0.0765	0.242	0.0692	0.242	0.0652	0.242	0.0639	0.242	0.0627	0.242	0.0606	0.242	0.0581
0.2535	0.1105	0.2535	0.092	0.2535	0.0827	0.2535	0.0753	0.2535	0.0694	0.2535	0.0632	0.2535	0.0604
0.2656	0.1221	0.2656	0.0955	0.2656	0.083	0.2656	0.0753	0.2656	0.0694	0.2656	0.0652	0.2656	0.0619
0.2783	0.1221	0.2783	0.0955	0.2783	0.0836	0.2783	0.0789	0.2783	0.0748	0.2783	0.0679	0.2783	0.0626
0.2915	0.1221	0.2915	0.1011	0.2915	0.0941	0.2915	0.0879	0.2915	0.0824	0.2915	0.0732	0.2915	0.0631
0.3054	0.1371	0.3054	0.1191	0.3054	0.1092	0.3054	0.1006	0.3054	0.0931	0.3054	0.0811	0.3054	0.0706
0.3199	0.1652	0.3199	0.1286	0.3199	0.1172	0.3199	0.1073	0.3199	0.0989	0.3199	0.0856	0.3199	0.0757
0.3352	0.1878	0.3352	0.1337	0.3352	0.1172	0.3352	0.1073	0.3352	0.0989	0.3352	0.0865	0.3352	0.0771
0.3511	0.2181	0.3511	0.1647	0.3511	0.1395	0.3511	0.12	0.3511	0.1078	0.3511	0.0935	0.3511	0.0785
0.3678	0.2181	0.3678	0.1647	0.3678	0.1397	0.3678	0.1283	0.3678	0.1183	0.3678	0.1047	0.3678	0.0915

0.3853	0.2181	0.3853	0.1647	0.3853	0.147	0.3853	0.138	0.3853	0.13	0.3853	0.1166	0.3853	0.1017
0.4037	0.2181	0.4037	0.1647	0.4037	0.1478	0.4037	0.1391	0.4037	0.1314	0.4037	0.1186	0.4037	0.1044
0.4229	0.2189	0.4229	0.1647	0.4229	0.1478	0.4229	0.1391	0.4229	0.1314	0.4229	0.1186	0.4229	0.1044
0.4431	0.3472	0.4431	0.2355	0.4431	0.1923	0.4431	0.1615	0.4431	0.1413	0.4431	0.1213	0.4431	0.1119
0.4642	0.3472	0.4642	0.2355	0.4642	0.1951	0.4642	0.1751	0.4642	0.1594	0.4642	0.1384	0.4642	0.1214
0.4863	0.3472	0.4863	0.2355	0.4863	0.1951	0.4863	0.1781	0.4863	0.1665	0.4863	0.1492	0.4863	0.1273
0.5094	0.3472	0.5094	0.2355	0.5094	0.2018	0.5094	0.1893	0.5094	0.178	0.5094	0.1574	0.5094	0.133
0.5337	0.3695	0.5337	0.2689	0.5337	0.232	0.5337	0.2061	0.5337	0.1852	0.5337	0.1574	0.5337	0.133
0.5591	0.3695	0.5591	0.281	0.5591	0.2442	0.5591	0.2148	0.5591	0.193	0.5591	0.1633	0.5591	0.1435
0.5857	0.3695	0.5857	0.2873	0.5857	0.2546	0.5857	0.228	0.5857	0.2062	0.5857	0.1801	0.5857	0.1608
0.6136	0.3695	0.6136	0.2873	0.6136	0.2546	0.6136	0.228	0.6136	0.2069	0.6136	0.1894	0.6136	0.1692
0.6428	0.3817	0.6428	0.2873	0.6428	0.2546	0.6428	0.2298	0.6428	0.2121	0.6428	0.1961	0.6428	0.1762
0.6734	0.3817	0.6734	0.2976	0.6734	0.2715	0.6734	0.2487	0.6734	0.2338	0.6734	0.2138	0.6734	0.1889
0.7055	0.4491	0.7055	0.37	0.7055	0.3283	0.7055	0.2935	0.7055	0.2706	0.7055	0.2341	0.7055	0.2005
0.7391	0.5365	0.7391	0.4265	0.7391	0.3742	0.7391	0.3318	0.7391	0.2971	0.7391	0.2451	0.7391	0.2071
0.7743	0.628	0.7743	0.4729	0.7743	0.4012	0.7743	0.3465	0.7743	0.3042	0.7743	0.2469	0.7743	0.2325
0.8111	0.813	0.8111	0.4774	0.8111	0.4012	0.8111	0.3465	0.8111	0.3042	0.8111	0.2755	0.8111	0.2586
0.8497	0.813	0.8497	0.4774	0.8497	0.4012	0.8497	0.3574	0.8497	0.3295	0.8497	0.3025	0.8497	0.2836
0.8902	0.813	0.8902	0.4774	0.8902	0.4159	0.8902	0.3821	0.8902	0.3545	0.8902	0.3296	0.8902	0.3085
0.9326	1.0682	0.9326	0.63	0.9326	0.502	0.9326	0.4299	0.9326	0.3762	0.9326	0.3568	0.9326	0.3336
0.977	1.0682	0.977	0.6921	0.977	0.5678	0.977	0.4802	0.977	0.4166	0.977	0.3823	0.977	0.3564
1.0235	1.0682	1.0235	0.6921	1.0235	0.5678	1.0235	0.4802	1.0235	0.4461	1.0235	0.4083	1.0235	0.3759
1.0723	1.0682	1.0723	0.6921	1.0723	0.5678	1.0723	0.5223	1.0723	0.499	1.0723	0.457	1.0723	0.4039
1.1233	1.2235	1.1233	0.7093	1.1233	0.6072	1.1233	0.5774	1.1233	0.5491	1.1233	0.5	1.1233	0.4397
1.1768	1.2235	1.1768	0.7609	1.1768	0.6761	1.1768	0.6181	1.1768	0.5844	1.1768	0.5279	1.1768	0.4629
1.2328	1.2235	1.2328	0.7609	1.2328	0.6761	1.2328	0.6181	1.2328	0.5848	1.2328	0.5319	1.2328	0.4733
1.2916	1.38	1.2916	0.9702	1.2916	0.8115	1.2916	0.7038	1.2916	0.6261	1.2916	0.5319	1.2916	0.4757
1.353	1.5277	1.353	1.0704	1.353	0.893	1.353	0.7708	1.353	0.6847	1.353	0.5767	1.353	0.5012
1.4175	1.5277	1.4175	1.0704	1.4175	0.9317	1.4175	0.8594	1.4175	0.7938	1.4175	0.6823	1.4175	0.5606
1.485	1.5277	1.485	1.1558	1.485	1.036	1.485	0.9419	1.485	0.8621	1.485	0.7311	1.485	0.5961
1.5557	1.9994	1.5557	1.2739	1.5557	1.0575	1.5557	0.9419	1.5557	0.8621	1.5557	0.7311	1.5557	0.6097
1.6298	1.9994	1.6298	1.2739	1.6298	1.0685	1.6298	0.9942	1.6298	0.9258	1.6298	0.8095	1.6298	0.6757
1.7074	1.9994	1.7074	1.3467	1.7074	1.1921	1.7074	1.0891	1.7074	1.0073	1.7074	0.8754	1.7074	0.7234
1.7887	2.5094	1.7887	1.5259	1.7887	1.3435	1.7887	1.198	1.7887	1.0737	1.7887	0.8849	1.7887	0.7284
1.8738	2.5094	1.8738	1.5259	1.8738	1.3435	1.8738	1.2126	1.8738	1.0986	1.8738	0.9122	1.8738	0.7848
1.963	2.5094	1.963	1.6919	1.963	1.3738	1.963	1.2126	1.963	1.0986	1.963	0.9419	1.963	0.8346
2.0565	2.5094	2.0565	1.6919	2.0565	1.3738	2.0565	1.2126	2.0565	1.1043	2.0565	1.0014	2.0565	0.8791
2.1544	2.5094	2.1544	1.6919	2.1544	1.3738	2.1544	1.2586	2.1544	1.1906	2.1544	1.0705	2.1544	0.9161
2.257	2.5118	2.257	1.6919	2.257	1.4972	2.257	1.3913	2.257	1.2957	2.257	1.1384	2.257	0.9527

2.3645	2.6594	2.3645	1.8721	2.3645	1.6678	2.3645	1.5032	2.3645	1.3686	2.3645	1.1626	2.3645	0.9527
2.4771	2.6594	2.4771	1.8721	2.4771	1.6678	2.4771	1.5032	2.4771	1.3686	2.4771	1.1626	2.4771	0.9527
2.595	2.9473	2.595	2.0725	2.595	1.7153	2.595	1.5032	2.595	1.3686	2.595	1.1626	2.595	0.9527
2.7186	3.3563	2.7186	2.0725	2.7186	1.7153	2.7186	1.5032	2.7186	1.3686	2.7186	1.1626	2.7186	0.9527
2.848	3.3563	2.848	2.0725	2.848	1.7153	2.848	1.5032	2.848	1.3686	2.848	1.1626	2.848	0.9527
2.9836	3.3563	2.9836	2.0725	2.9836	1.7536	2.9836	1.5166	2.9836	1.3191	2.9836	1.1021	2.9836	0.9624
3.1257	3.3563	3.1257	2.0725	3.1257	1.7536	3.1257	1.5166	3.1257	1.3191	3.1257	1.1021	3.1257	0.9624
3.2745	3.3563	3.2745	2.0076	3.2745	1.7536	3.2745	1.5166	3.2745	1.3191	3.2745	1.1021	3.2745	0.9624
3.4305	2.3492	3.4305	1.7893	3.4305	1.7536	3.4305	1.5166	3.4305	1.3191	3.4305	1.0863	3.4305	0.9624
3.5938	1.9258	3.5938	1.7893	3.5938	1.7536	3.5938	1.5166	3.5938	1.3191	3.5938	1.0863	3.5938	0.9624
3.7649	1.9258	3.7649	1.6814	3.7649	1.4648	3.7649	1.3142	3.7649	1.2046	3.7649	1.0723	3.7649	0.9532
3.9442	1.9258	3.9442	1.4249	3.9442	1.266	3.9442	1.1716	3.9442	1.1062	3.9442	1.0158	3.9442	0.9161
4.132	1.9258	4.132	1.3151	4.132	1.1186	4.132	0.9925	4.132	0.9639	4.132	0.9241	4.132	0.8565
4.3288	1.9258	4.3288	1.3151	4.3288	1.1186	4.3288	0.9925	4.3288	0.9036	4.3288	0.8451	4.3288	0.7892
4.5349	1.7138	4.5349	1.0833	4.5349	0.9804	4.5349	0.8879	4.5349	0.8266	4.5349	0.7534	4.5349	0.726
4.7508	1.5698	4.7508	1.006	4.7508	0.9133	4.7508	0.8601	4.7508	0.8104	4.7508	0.727	4.7508	0.671
4.977	1.5698	4.977	1.006	4.977	0.8727	4.977	0.7769	4.977	0.7266	4.977	0.659	4.977	0.6299
5.214	1.5698	5.214	0.8976	5.214	0.7649	5.214	0.6877	5.214	0.636	5.214	0.5985	5.214	0.5865
5.4623	1.0521	5.4623	0.6474	5.4623	0.5881	5.4623	0.5734	5.4623	0.5654	5.4623	0.5556	5.4623	0.546
5.7224	1.2	5.7224	0.6474	5.7224	0.5602	5.7224	0.5421	5.7224	0.5301	5.7224	0.5147	5.7224	0.5117
5.9948	1.2	5.9948	0.6474	5.9948	0.5599	5.9948	0.5327	5.9948	0.512	5.9948	0.4821	5.9948	0.4861
6.2803	1.2	6.2803	0.7482	6.2803	0.6357	6.2803	0.5707	6.2803	0.5436	6.2803	0.4982	6.2803	0.4735
6.5793	1.5424	6.5793	0.8479	6.5793	0.6847	6.5793	0.6018	6.5793	0.5757	6.5793	0.5344	6.5793	0.4848
6.8926	1.8136	6.8926	0.974	6.8926	0.7343	6.8926	0.6233	6.8926	0.5933	6.8926	0.5446	6.8926	0.4987
7.2208	1.8136	7.2208	0.974	7.2208	0.7423	7.2208	0.684	7.2208	0.6378	7.2208	0.5711	7.2208	0.5069
7.5646	1.8136	7.5646	0.974	7.5646	0.7423	7.5646	0.684	7.5646	0.6378	7.5646	0.5711	7.5646	0.5069
7.9248	1.8136	7.9248	0.974	7.9248	0.7423	7.9248	0.684	7.9248	0.6378	7.9248	0.5711	7.9248	0.5069
8.3022	1.8136	8.3022	0.974	8.3022	0.7423	8.3022	0.684	8.3022	0.6378	8.3022	0.5711	8.3022	0.5069
8.6975	1.4099	8.6975	0.8352	8.6975	0.7423	8.6975	0.684	8.6975	0.6378	8.6975	0.5711	8.6975	0.5069
9.1116	1.001	9.1116	0.6622	9.1116	0.6162	9.1116	0.5977	9.1116	0.5769	9.1116	0.5373	9.1116	0.4896
9.5455	0.8404	9.5455	0.5998	9.5455	0.5657	9.5455	0.5394	9.5455	0.5225	9.5455	0.5005	9.5455	0.4689
10	0.6745	10	0.5998	10	0.5657	10	0.5394	10	0.5187	10	0.4877	10	0.4553
10.4762	0.572	10.4762	0.4915	10.4762	0.487	10.4762	0.4816	10.4762	0.4736	10.4762	0.4556	10.4762	0.433
10.975	0.572	10.975	0.4915	10.975	0.4781	10.975	0.4658	10.975	0.4552	10.975	0.4378	10.975	0.4175
11.4976	0.4636	11.4976	0.4648	11.4976	0.4484	11.4976	0.4337	11.4976	0.4218	11.4976	0.4094	11.4976	0.3962
12.045	0.4491	12.045	0.4045	12.045	0.3965	12.045	0.3945	12.045	0.393	12.045	0.3913	12.045	0.3895
12.6186	0.4491	12.6186	0.4045	12.6186	0.3957	12.6186	0.392	12.6186	0.3903	12.6186	0.3885	12.6186	0.3869
13.2194	0.4491	13.2194	0.4045	13.2194	0.3957	13.2194	0.3907	13.2194	0.3882	13.2194	0.3853	13.2194	0.3846
13.8489	0.5669	13.8489	0.4508	13.8489	0.4226	13.8489	0.4077	13.8489	0.3984	13.8489	0.3876	13.8489	0.3834

14.5083	0.5669	14.5083	0.4508	14.5083	0.4226	14.5083	0.4077	14.5083	0.3984	14.5083	0.3876	14.5083	0.3822
15.1991	0.5669	15.1991	0.4508	15.1991	0.4226	15.1991	0.4077	15.1991	0.3984	15.1991	0.3876	15.1991	0.3805
15.9228	0.5669	15.9228	0.4508	15.9228	0.4226	15.9228	0.4077	15.9228	0.3984	15.9228	0.3876	15.9228	0.3804
16.681	0.5669	16.681	0.4508	16.681	0.4226	16.681	0.4077	16.681	0.3984	16.681	0.3876	16.681	0.3793
17.4753	0.5622	17.4753	0.4284	17.4753	0.4129	17.4753	0.4035	17.4753	0.3964	17.4753	0.3864	17.4753	0.3788
18.3074	0.5236	18.3074	0.4191	18.3074	0.4041	18.3074	0.397	18.3074	0.3916	18.3074	0.3843	18.3074	0.3788
19.1791	0.5236	19.1791	0.4191	19.1791	0.4041	19.1791	0.397	19.1791	0.3916	19.1791	0.3843	19.1791	0.3788
20.0923	0.5236	20.0923	0.4128	20.0923	0.4041	20.0923	0.397	20.0923	0.3916	20.0923	0.3843	20.0923	0.3788
21.049	0.4235	21.049	0.3889	21.049	0.3847	21.049	0.3848	21.049	0.3841	21.049	0.382	21.049	0.3788
22.0513	0.4235	22.0513	0.3889	22.0513	0.384	22.0513	0.3822	22.0513	0.3809	22.0513	0.3798	22.0513	0.3777
23.1013	0.4235	23.1013	0.3889	23.1013	0.384	23.1013	0.3822	23.1013	0.3807	23.1013	0.3785	23.1013	0.3762
24.2013	0.396	24.2013	0.3804	24.2013	0.3791	24.2013	0.3781	24.2013	0.3771	24.2013	0.3754	24.2013	0.3738
25.3536	0.396	25.3536	0.3788	25.3536	0.3776	25.3536	0.3766	25.3536	0.3757	25.3536	0.3743	25.3536	0.3729
26.5609	0.396	26.5609	0.3769	26.5609	0.3743	26.5609	0.3732	26.5609	0.3726	26.5609	0.372	26.5609	0.3715
27.8256	0.3933	27.8256	0.3748	27.8256	0.3724	27.8256	0.3717	27.8256	0.3711	27.8256	0.3703	27.8256	0.3703
29.1505	0.3933	29.1505	0.3735	29.1505	0.3724	29.1505	0.3717	29.1505	0.3711	29.1505	0.3703	29.1505	0.3699
30.5386	0.3933	30.5386	0.3735	30.5386	0.3724	30.5386	0.3717	30.5386	0.3711	30.5386	0.3702	30.5386	0.3695
31.9927	0.3933	31.9927	0.3729	31.9927	0.3707	31.9927	0.3699	31.9927	0.3693	31.9927	0.3687	31.9927	0.3687
33.516	0.3733	33.516	0.3719	33.516	0.3707	33.516	0.3699	33.516	0.3693	33.516	0.3685	33.516	0.3684
35.1119	0.3694	35.1119	0.3692	35.1119	0.3689	35.1119	0.3687	35.1119	0.3685	35.1119	0.3685	35.1119	0.3684
36.7838	0.3686	36.7838	0.3686	36.7838	0.3685	36.7838	0.3685	36.7838	0.3685	36.7838	0.3685	36.7838	0.3684
38.5353	0.3686	38.5353	0.3686	38.5353	0.3685	38.5353	0.3685	38.5353	0.3685	38.5353	0.3685	38.5353	0.3684
40.3702	0.3686	40.3702	0.3686	40.3702	0.3685	40.3702	0.3685	40.3702	0.3685	40.3702	0.3685	40.3702	0.3684
42.2924	0.3685	42.2924	0.3685	42.2924	0.3685	42.2924	0.3685	42.2924	0.3685	42.2924	0.3684	42.2924	0.3684
44.3062	0.3685	44.3062	0.3684	44.3062	0.3684	44.3062	0.3684	44.3062	0.3684	44.3062	0.3684	44.3062	0.3684
46.4159	0.3684	46.4159	0.3684	46.4159	0.3684	46.4159	0.3683	46.4159	0.3683	46.4159	0.3683	46.4159	0.3683
48.626	0.3683	48.626	0.3683	48.626	0.3683	48.626	0.3683	48.626	0.3683	48.626	0.3683	48.626	0.3683
50.9414	0.3682	50.9414	0.3682	50.9414	0.3682	50.9414	0.3682	50.9414	0.3682	50.9414	0.3682	50.9414	0.3682

RPP-WTP Pretreatment Facility ISRS
Calc No.: 24590-PTF-S0C-S15T-00005, Rev. 0B

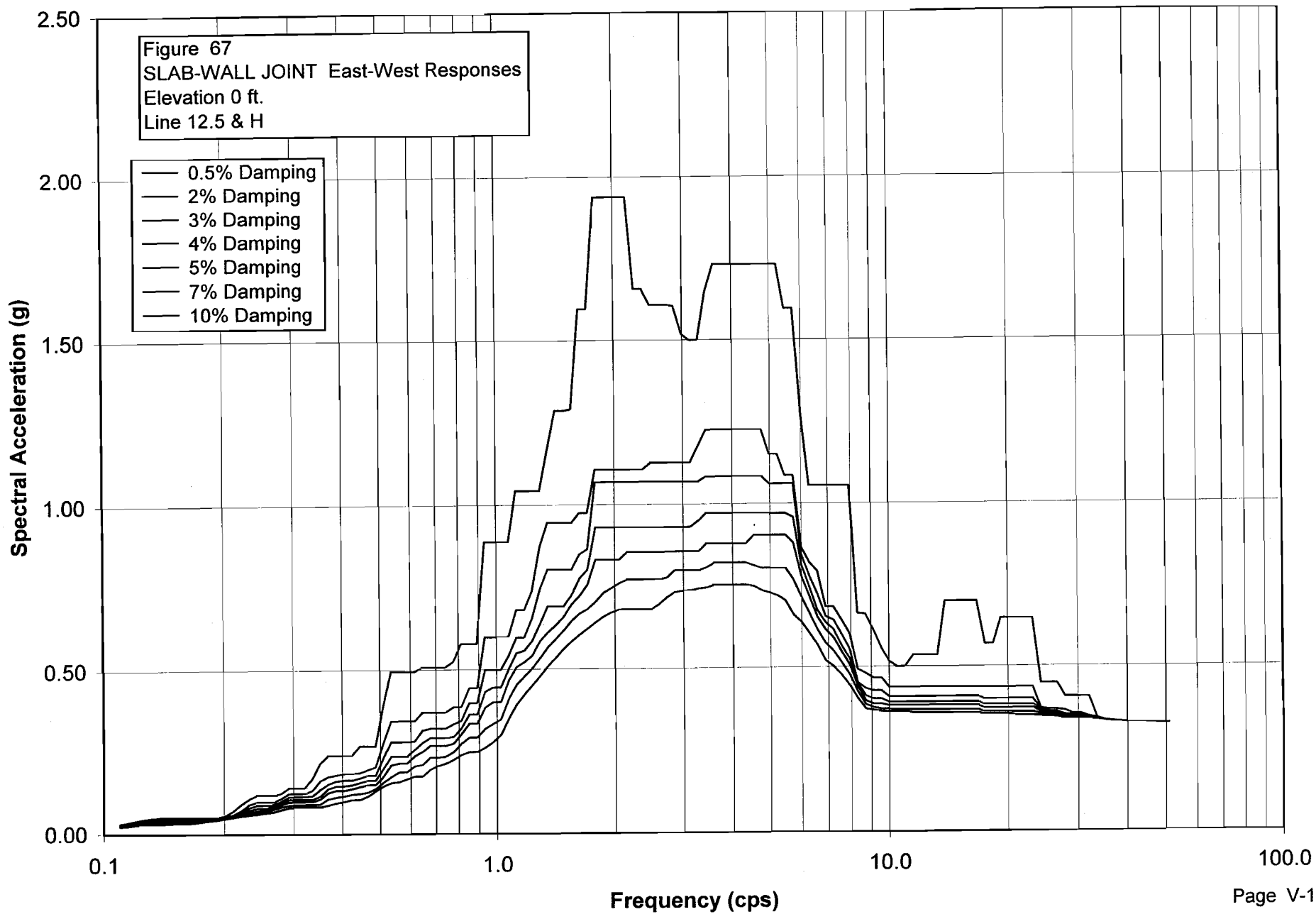

S_PTWW067.grf
RPP-WTP Pretreatment Facility ISRS
Calc No.: 24590-PTF-S0C-S15T-00005, Rev. 0B
Frequency (cps)
Spectral Acceleration (g)
Figure 67
SLAB-WALL JOINT East-West Responses
Elevation 0 ft.
Line 12.5 & H

Damping	0.50%	Damping	2%	Damping	3%	Damping	4%	Damping	5%	Damping	7%	Damping	10%
Freq.	Accel.	Freq.	Accel.	Freq.	Accel.	Freq.	Accel.	Freq.	Accel.	Freq.	Accel.	Freq.	Accel.
0.1098	0.0314	0.1098	0.0288	0.1098	0.0275	0.1098	0.0267	0.1098	0.026	0.1098	0.0247	0.1098	0.0231
0.115	0.0358	0.115	0.033	0.115	0.0314	0.115	0.03	0.115	0.0289	0.115	0.0273	0.115	0.0253
0.1204	0.041	0.1204	0.0382	0.1204	0.0366	0.1204	0.0352	0.1204	0.0339	0.1204	0.0316	0.1204	0.0287
0.1262	0.0459	0.1262	0.0426	0.1262	0.0406	0.1262	0.0389	0.1262	0.0372	0.1262	0.0344	0.1262	0.0311
0.1322	0.0488	0.1322	0.0442	0.1322	0.0421	0.1322	0.0402	0.1322	0.0385	0.1322	0.0355	0.1322	0.032
0.1385	0.0518	0.1385	0.0463	0.1385	0.0431	0.1385	0.0402	0.1385	0.0385	0.1385	0.0355	0.1385	0.032
0.1451	0.0518	0.1451	0.0463	0.1451	0.0431	0.1451	0.0402	0.1451	0.0385	0.1451	0.0355	0.1451	0.032
0.152	0.0518	0.152	0.0463	0.152	0.0431	0.152	0.0402	0.152	0.0385	0.152	0.0355	0.152	0.032
0.1592	0.0518	0.1592	0.0463	0.1592	0.0431	0.1592	0.0402	0.1592	0.0385	0.1592	0.0355	0.1592	0.0322
0.1668	0.0518	0.1668	0.0463	0.1668	0.0431	0.1668	0.0402	0.1668	0.0385	0.1668	0.0361	0.1668	0.0348
0.1748	0.0518	0.1748	0.0463	0.1748	0.0431	0.1748	0.041	0.1748	0.0403	0.1748	0.0392	0.1748	0.0375
0.1831	0.0518	0.1831	0.0463	0.1831	0.0454	0.1831	0.0446	0.1831	0.0438	0.1831	0.0424	0.1831	0.0402
0.1918	0.0521	0.1918	0.0504	0.1918	0.0494	0.1918	0.0484	0.1918	0.0474	0.1918	0.0455	0.1918	0.0433
0.2009	0.0569	0.2009	0.0549	0.2009	0.0536	0.2009	0.0524	0.2009	0.0513	0.2009	0.0494	0.2009	0.0471
0.2105	0.0707	0.2105	0.06	0.2105	0.0585	0.2105	0.0572	0.2105	0.056	0.2105	0.0538	0.2105	0.0513
0.2205	0.0909	0.2205	0.0714	0.2205	0.0642	0.2205	0.0623	0.2205	0.0608	0.2205	0.0584	0.2205	0.0554
0.231	0.1078	0.231	0.0906	0.231	0.0813	0.231	0.0735	0.231	0.0671	0.231	0.0628	0.231	0.0589
0.242	0.1194	0.242	0.0991	0.242	0.0883	0.242	0.0791	0.242	0.0714	0.242	0.0663	0.242	0.0617
0.2535	0.12	0.2535	0.0991	0.2535	0.0883	0.2535	0.0796	0.2535	0.0755	0.2535	0.069	0.2535	0.0654
0.2656	0.12	0.2656	0.0991	0.2656	0.0922	0.2656	0.0879	0.2656	0.0839	0.2656	0.0769	0.2656	0.0684
0.2783	0.1252	0.2783	0.1094	0.2783	0.1006	0.2783	0.0949	0.2783	0.0907	0.2783	0.0832	0.2783	0.0751
0.2915	0.1421	0.2915	0.1244	0.2915	0.1145	0.2915	0.1057	0.2915	0.0979	0.2915	0.0883	0.2915	0.0805
0.3054	0.1421	0.3054	0.1244	0.3054	0.115	0.3054	0.1067	0.3054	0.0994	0.3054	0.0903	0.3054	0.0832
0.3199	0.1421	0.3199	0.1244	0.3199	0.115	0.3199	0.1067	0.3199	0.0994	0.3199	0.0903	0.3199	0.0837
0.3352	0.1707	0.3352	0.1342	0.3352	0.1178	0.3352	0.1067	0.3352	0.0994	0.3352	0.0903	0.3352	0.0837
0.3511	0.2169	0.3511	0.1627	0.3511	0.1366	0.3511	0.1164	0.3511	0.107	0.3511	0.0922	0.3511	0.0837
0.3678	0.2396	0.3678	0.1754	0.3678	0.1523	0.3678	0.1387	0.3678	0.1269	0.3678	0.1073	0.3678	0.0882

0.3853	0.2396	0.3853	0.1799	0.3853	0.1618	0.3853	0.1463	0.3853	0.1331	0.3853	0.112	0.3853	0.0944
0.4037	0.2396	0.4037	0.1842	0.4037	0.164	0.4037	0.1472	0.4037	0.1332	0.4037	0.1155	0.4037	0.0992
0.4229	0.2396	0.4229	0.1842	0.4229	0.164	0.4229	0.1495	0.4229	0.1381	0.4229	0.1214	0.4229	0.1046
0.4431	0.2688	0.4431	0.1868	0.4431	0.1709	0.4431	0.1568	0.4431	0.1442	0.4431	0.1234	0.4431	0.1046
0.4642	0.2688	0.4642	0.1954	0.4642	0.1781	0.4642	0.1629	0.4642	0.1495	0.4642	0.1272	0.4642	0.1151
0.4863	0.2688	0.4863	0.2037	0.4863	0.1784	0.4863	0.1629	0.4863	0.1495	0.4863	0.1378	0.4863	0.1308
0.5094	0.3911	0.5094	0.2791	0.5094	0.2331	0.5094	0.2001	0.5094	0.1754	0.5094	0.1572	0.5094	0.1456
0.5337	0.4951	0.5337	0.3445	0.5337	0.2811	0.5337	0.237	0.5337	0.2102	0.5337	0.174	0.5337	0.1562
0.5591	0.4951	0.5591	0.3445	0.5591	0.2811	0.5591	0.237	0.5591	0.2161	0.5591	0.1886	0.5591	0.1586
0.5857	0.4951	0.5857	0.3445	0.5857	0.2811	0.5857	0.237	0.5857	0.2161	0.5857	0.1886	0.5857	0.1672
0.6136	0.4951	0.6136	0.3445	0.6136	0.2835	0.6136	0.2579	0.6136	0.2376	0.6136	0.2068	0.6136	0.1755
0.6428	0.5081	0.6428	0.3704	0.6428	0.3158	0.6428	0.2788	0.6428	0.2506	0.6428	0.2109	0.6428	0.1755
0.6734	0.5081	0.6734	0.3704	0.6734	0.3214	0.6734	0.2929	0.6734	0.2694	0.6734	0.2332	0.6734	0.1957
0.7055	0.5081	0.7055	0.3704	0.7055	0.3214	0.7055	0.2929	0.7055	0.2694	0.7055	0.2332	0.7055	0.2068
0.7391	0.5081	0.7391	0.3704	0.7391	0.3214	0.7391	0.2929	0.7391	0.2694	0.7391	0.2359	0.7391	0.2145
0.7743	0.5246	0.7743	0.3867	0.7743	0.3352	0.7743	0.2967	0.7743	0.2757	0.7743	0.2494	0.7743	0.2264
0.8111	0.5776	0.8111	0.3867	0.8111	0.3456	0.8111	0.3215	0.8111	0.3045	0.8111	0.2755	0.8111	0.2408
0.8497	0.5776	0.8497	0.444	0.8497	0.3988	0.8497	0.3642	0.8497	0.3363	0.8497	0.2936	0.8497	0.2491
0.8902	0.5776	0.8902	0.444	0.8902	0.3988	0.8902	0.3642	0.8902	0.3363	0.8902	0.2936	0.8902	0.2491
0.9326	0.8877	0.9326	0.5975	0.9326	0.4991	0.9326	0.4325	0.9326	0.3845	0.9326	0.3203	0.9326	0.2634
0.977	0.8877	0.977	0.5975	0.977	0.4991	0.977	0.4459	0.977	0.4011	0.977	0.3342	0.977	0.2792
1.0235	0.8877	1.0235	0.5975	1.0235	0.4991	1.0235	0.4459	1.0235	0.4011	1.0235	0.3491	1.0235	0.3012
1.0723	0.8877	1.0723	0.6	1.0723	0.5421	1.0723	0.5019	1.0723	0.4672	1.0723	0.4115	1.0723	0.3515
1.1233	1.0436	1.1233	0.6796	1.1233	0.5961	1.1233	0.5493	1.1233	0.5076	1.1233	0.454	1.1233	0.393
1.1768	1.0436	1.1768	0.6796	1.1768	0.5966	1.1768	0.5564	1.1768	0.5218	1.1768	0.4787	1.1768	0.424
1.2328	1.0436	1.2328	0.7363	1.2328	0.6543	1.2328	0.5857	1.2328	0.5418	1.2328	0.503	1.2328	0.452
1.2916	1.0436	1.2916	0.8733	1.2916	0.7423	1.2916	0.6374	1.2916	0.5853	1.2916	0.5346	1.2916	0.4807
1.353	1.1657	1.353	0.9454	1.353	0.8025	1.353	0.6903	1.353	0.6111	1.353	0.5663	1.353	0.5097
1.4175	1.2899	1.4175	0.9454	1.4175	0.8025	1.4175	0.6903	1.4175	0.6337	1.4175	0.5919	1.4175	0.5357
1.485	1.2899	1.485	0.9454	1.485	0.8025	1.485	0.6903	1.485	0.6584	1.485	0.617	1.485	0.5609
1.5557	1.2945	1.5557	0.9454	1.5557	0.8025	1.5557	0.7243	1.5557	0.696	1.5557	0.6469	1.5557	0.584
1.6298	1.5963	1.6298	0.9746	1.6298	0.8489	1.6298	0.7751	1.6298	0.7218	1.6298	0.6683	1.6298	0.604
1.7074	1.5963	1.7074	0.9746	1.7074	0.8647	1.7074	0.8015	1.7074	0.7551	1.7074	0.6813	1.7074	0.6226
1.7887	1.939	1.7887	1.1073	1.7887	1.0689	1.7887	0.93	1.7887	0.8319	1.7887	0.7035	1.7887	0.6419
1.8738	1.939	1.8738	1.1073	1.8738	1.0689	1.8738	0.93	1.8738	0.8319	1.8738	0.7304	1.8738	0.6589
1.963	1.939	1.963	1.1073	1.963	1.0689	1.963	0.93	1.963	0.8319	1.963	0.7451	1.963	0.671
2.0565	1.939	2.0565	1.1073	2.0565	1.0689	2.0565	0.93	2.0565	0.8319	2.0565	0.7593	2.0565	0.6798
2.1544	1.939	2.1544	1.1073	2.1544	1.0689	2.1544	0.93	2.1544	0.8543	2.1544	0.771	2.1544	0.6798
2.257	1.6562	2.257	1.1073	2.257	1.0689	2.257	0.93	2.257	0.8543	2.257	0.771	2.257	0.6798

2.3645	1.6562	2.3645	1.1073	2.3645	1.0689	2.3645	0.93	2.3645	0.8543	2.3645	0.771	2.3645	0.6798
2.4771	1.6073	2.4771	1.127	2.4771	1.0689	2.4771	0.93	2.4771	0.8543	2.4771	0.771	2.4771	0.6798
2.595	1.6073	2.595	1.127	2.595	1.0689	2.595	0.93	2.595	0.8543	2.595	0.771	2.595	0.6948
2.7186	1.6073	2.7186	1.127	2.7186	1.0689	2.7186	0.93	2.7186	0.8543	2.7186	0.775	2.7186	0.7152
2.848	1.6038	2.848	1.127	2.848	1.0689	2.848	0.93	2.848	0.8559	2.848	0.7972	2.848	0.7309
2.9836	1.5188	2.9836	1.127	2.9836	1.0689	2.9836	0.93	2.9836	0.8559	2.9836	0.7972	2.9836	0.7343
3.1257	1.4997	3.1257	1.127	3.1257	1.0689	3.1257	0.93	3.1257	0.8559	3.1257	0.7972	3.1257	0.7358
3.2745	1.4997	3.2745	1.1771	3.2745	1.0689	3.2745	0.9489	3.2745	0.8559	3.2745	0.7972	3.2745	0.7415
3.4305	1.6477	3.4305	1.2287	3.4305	1.0843	3.4305	0.9715	3.4305	0.8786	3.4305	0.8056	3.4305	0.7439
3.5938	1.729	3.5938	1.2287	3.5938	1.0843	3.5938	0.9715	3.5938	0.8786	3.5938	0.8201	3.5938	0.7521
3.7649	1.729	3.7649	1.2287	3.7649	1.0843	3.7649	0.9715	3.7649	0.8786	3.7649	0.8201	3.7649	0.7521
3.9442	1.729	3.9442	1.2287	3.9442	1.0843	3.9442	0.9715	3.9442	0.8786	3.9442	0.8201	3.9442	0.7521
4.132	1.729	4.132	1.2287	4.132	1.0843	4.132	0.9715	4.132	0.8786	4.132	0.8201	4.132	0.7521
4.3288	1.729	4.3288	1.2287	4.3288	1.0843	4.3288	0.9715	4.3288	0.8786	4.3288	0.8201	4.3288	0.7521
4.5349	1.729	4.5349	1.2287	4.5349	1.0843	4.5349	0.9715	4.5349	0.9034	4.5349	0.8114	4.5349	0.7477
4.7508	1.729	4.7508	1.2287	4.7508	1.0843	4.7508	0.9715	4.7508	0.9034	4.7508	0.8028	4.7508	0.7348
4.977	1.729	4.977	1.1517	4.977	1.0607	4.977	0.9698	4.977	0.9034	4.977	0.8028	4.977	0.7272
5.214	1.729	5.214	1.1517	5.214	1.0607	5.214	0.9698	5.214	0.9034	5.214	0.8028	5.214	0.7183
5.4623	1.5947	5.4623	1.0863	5.4623	1.0607	5.4623	0.9698	5.4623	0.9034	5.4623	0.8028	5.4623	0.7033
5.7224	1.5947	5.7224	1.0863	5.7224	1.0607	5.7224	0.9582	5.7224	0.8798	5.7224	0.767	5.7224	0.6597
5.9948	1.2803	5.9948	0.866	5.9948	0.8444	5.9948	0.8127	5.9948	0.7784	5.9948	0.714	5.9948	0.6374
6.2803	1.0548	6.2803	0.8195	6.2803	0.7776	6.2803	0.744	6.2803	0.7149	6.2803	0.6643	6.2803	0.6028
6.5793	1.0548	6.5793	0.7923	6.5793	0.7225	6.5793	0.6735	6.5793	0.6523	6.5793	0.6139	6.5793	0.5669
6.8926	1.0548	6.8926	0.6827	6.8926	0.6543	6.8926	0.635	6.8926	0.6133	6.8926	0.5713	6.8926	0.5194
7.2208	1.0548	7.2208	0.6827	7.2208	0.6434	7.2208	0.6137	7.2208	0.5893	7.2208	0.5492	7.2208	0.5024
7.5646	1.0548	7.5646	0.643	7.5646	0.5993	7.5646	0.5643	7.5646	0.5464	7.5646	0.5145	7.5646	0.476
7.9248	1.0548	7.9248	0.6	7.9248	0.5525	7.9248	0.5251	7.9248	0.5059	7.9248	0.4766	7.9248	0.444
8.3022	0.6638	8.3022	0.4935	8.3022	0.453	8.3022	0.4489	8.3022	0.4419	8.3022	0.4251	8.3022	0.4054
8.6975	0.6605	8.6975	0.4805	8.6975	0.4345	8.6975	0.413	8.6975	0.3975	8.6975	0.3855	8.6975	0.3723
9.1116	0.6123	9.1116	0.4662	9.1116	0.4277	9.1116	0.403	9.1116	0.3873	9.1116	0.3764	9.1116	0.3684
9.5455	0.5564	9.5455	0.4662	9.5455	0.4277	9.5455	0.403	9.5455	0.3873	9.5455	0.3716	9.5455	0.3649
10	0.5166	10	0.4371	10	0.4088	10	0.3922	10	0.3815	10	0.3716	10	0.3633
10.4762	0.4998	10.4762	0.4371	10.4762	0.4088	10.4762	0.3922	10.4762	0.3812	10.4762	0.37	10.4762	0.3633
10.975	0.5011	10.975	0.4371	10.975	0.4088	10.975	0.3922	10.975	0.3812	10.975	0.37	10.975	0.3633
11.4976	0.5346	11.4976	0.4371	11.4976	0.4088	11.4976	0.3922	11.4976	0.3812	11.4976	0.3678	11.4976	0.3593
12.045	0.5346	12.045	0.4371	12.045	0.4088	12.045	0.3922	12.045	0.3812	12.045	0.3678	12.045	0.3575
12.6186	0.5346	12.6186	0.4371	12.6186	0.4088	12.6186	0.3922	12.6186	0.3812	12.6186	0.3678	12.6186	0.3575
13.2194	0.5346	13.2194	0.4371	13.2194	0.4088	13.2194	0.3922	13.2194	0.3812	13.2194	0.3678	13.2194	0.3575
13.8489	0.6983	13.8489	0.4371	13.8489	0.4088	13.8489	0.3922	13.8489	0.3812	13.8489	0.3678	13.8489	0.3575

14.5083	0.6983	14.5083	0.4371	14.5083	0.4088	14.5083	0.3922	14.5083	0.3812	14.5083	0.3678	14.5083	0.3575
15.1991	0.6983	15.1991	0.4371	15.1991	0.4088	15.1991	0.3922	15.1991	0.3812	15.1991	0.3678	15.1991	0.3575
15.9228	0.6983	15.9228	0.4371	15.9228	0.4088	15.9228	0.3922	15.9228	0.3812	15.9228	0.3678	15.9228	0.3575
16.681	0.6983	16.681	0.4371	16.681	0.4088	16.681	0.3922	16.681	0.3812	16.681	0.3678	16.681	0.3575
17.4753	0.5675	17.4753	0.4359	17.4753	0.4009	17.4753	0.3832	17.4753	0.3725	17.4753	0.3623	17.4753	0.3546
18.3074	0.5675	18.3074	0.4359	18.3074	0.4009	18.3074	0.3832	18.3074	0.3725	18.3074	0.3623	18.3074	0.3546
19.1791	0.6461	19.1791	0.4359	19.1791	0.4009	19.1791	0.3832	19.1791	0.3725	19.1791	0.3623	19.1791	0.3546
20.0923	0.6461	20.0923	0.4359	20.0923	0.4009	20.0923	0.3832	20.0923	0.3725	20.0923	0.3623	20.0923	0.3546
21.049	0.6461	21.049	0.4359	21.049	0.4009	21.049	0.3832	21.049	0.3725	21.049	0.3601	21.049	0.3508
22.0513	0.6461	22.0513	0.4359	22.0513	0.4009	22.0513	0.3832	22.0513	0.3725	22.0513	0.3601	22.0513	0.3504
23.1013	0.6461	23.1013	0.4359	23.1013	0.4009	23.1013	0.3832	23.1013	0.3725	23.1013	0.3601	23.1013	0.3504
24.2013	0.4489	24.2013	0.3721	24.2013	0.3669	24.2013	0.3636	24.2013	0.3605	24.2013	0.3546	24.2013	0.3479
25.3536	0.4489	25.3536	0.3675	25.3536	0.3609	25.3536	0.3581	25.3536	0.3561	25.3536	0.3522	25.3536	0.3477
26.5609	0.4489	26.5609	0.3675	26.5609	0.3609	26.5609	0.3565	26.5609	0.3534	26.5609	0.3491	26.5609	0.3452
27.8256	0.4073	27.8256	0.3647	27.8256	0.3523	27.8256	0.3488	27.8256	0.3467	27.8256	0.3435	27.8256	0.3406
29.1505	0.4073	29.1505	0.3548	29.1505	0.3516	29.1505	0.3488	29.1505	0.3467	29.1505	0.3435	29.1505	0.3402
30.5386	0.4073	30.5386	0.3548	30.5386	0.3516	30.5386	0.3488	30.5386	0.3467	30.5386	0.3435	30.5386	0.3402
31.9927	0.4073	31.9927	0.3465	31.9927	0.345	31.9927	0.3447	31.9927	0.3438	31.9927	0.3417	31.9927	0.3392
33.516	0.3423	33.516	0.3426	33.516	0.3419	33.516	0.341	33.516	0.3401	33.516	0.3386	33.516	0.3369
35.1119	0.3337	35.1119	0.3344	35.1119	0.3347	35.1119	0.3349	35.1119	0.3349	35.1119	0.3348	35.1119	0.3343
36.7838	0.3313	36.7838	0.3316	36.7838	0.3318	36.7838	0.3319	36.7838	0.332	36.7838	0.3321	36.7838	0.332
38.5353	0.3298	38.5353	0.3299	38.5353	0.33	38.5353	0.3301	38.5353	0.3302	38.5353	0.3303	38.5353	0.3303
40.3702	0.3286	40.3702	0.3287	40.3702	0.3288	40.3702	0.3289	40.3702	0.3289	40.3702	0.329	40.3702	0.3291
42.2924	0.3277	42.2924	0.3278	42.2924	0.3278	42.2924	0.3279	42.2924	0.3279	42.2924	0.328	42.2924	0.328
44.3062	0.327	44.3062	0.327	44.3062	0.3271	44.3062	0.3271	44.3062	0.3271	44.3062	0.3271	44.3062	0.3272
46.4159	0.3263	46.4159	0.3264	46.4159	0.3264	46.4159	0.3264	46.4159	0.3264	46.4159	0.3264	46.4159	0.3265
48.626	0.3257	48.626	0.3257	48.626	0.3257	48.626	0.3257	48.626	0.3258	48.626	0.3258	48.626	0.3258
50.9414	0.3252	50.9414	0.3252	50.9414	0.3252	50.9414	0.3252	50.9414	0.3252	50.9414	0.3252	50.9414	0.3252

RPP-WTP Pretreatment Facility ISRS
Calc No.: 24590-PTF-S0C-S15T-00005, Rev. 0B

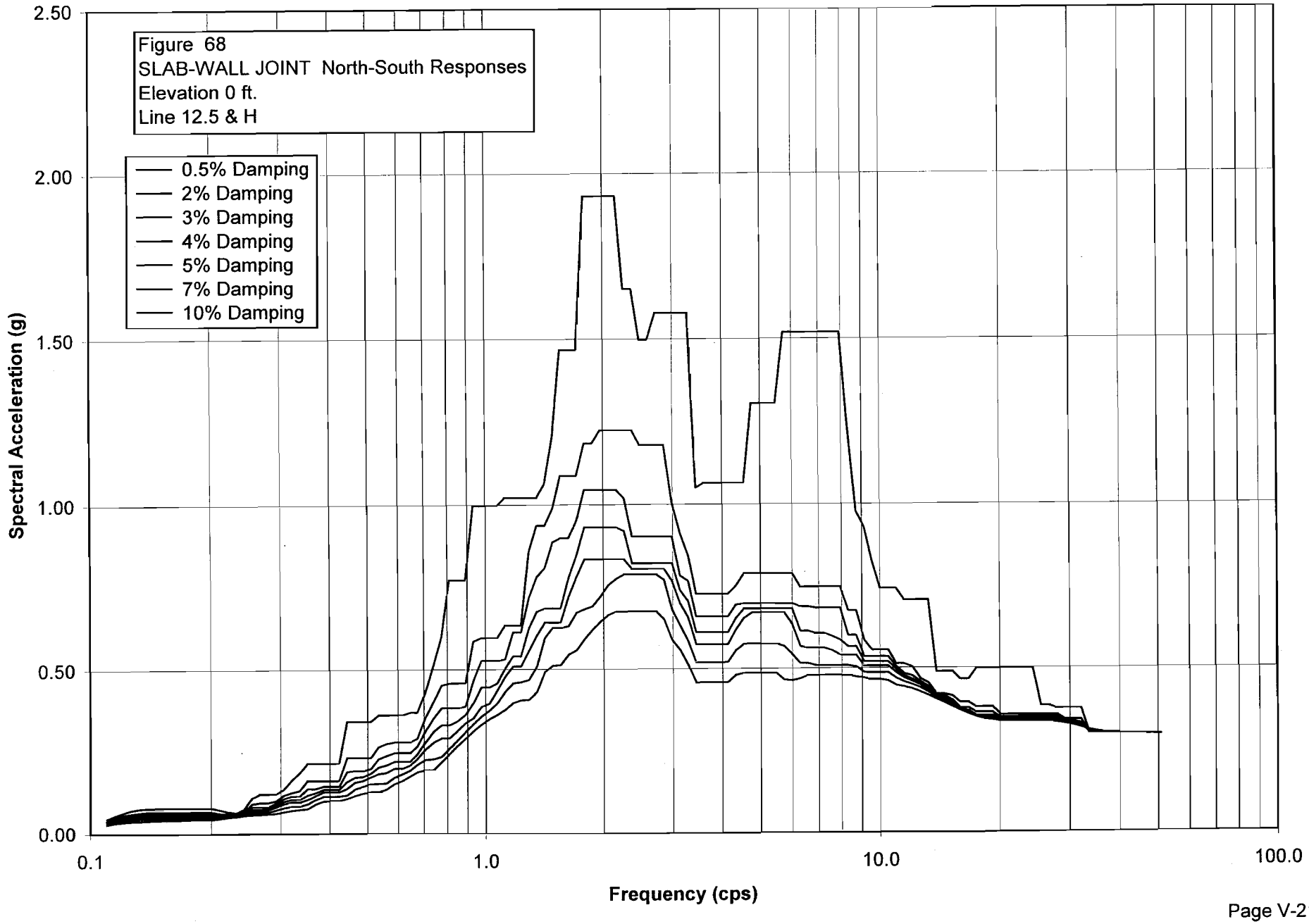

S_PTWW068.grf
RPP-WTP Pretreatment Facility ISRS
Calc No.: 24590-PTF-S0C-S15T-00005, Rev. 0B
Frequency (cps)
Spectral Acceleration (g)
Figure 68
SLAB-WALL JOINT North-South Responses
Elevation 0 ft.
Line 12.5 & H

Damping	0.50%	Damping	2%	Damping	3%	Damping	4%	Damping	5%	Damping	7%	Damping	10%
Freq.	Accel.	Freq.	Accel.	Freq.	Accel.	Freq.	Accel.	Freq.	Accel.	Freq.	Accel.	Freq.	Accel.
0.1098	0.0456	0.1098	0.0394	0.1098	0.0365	0.1098	0.0343	0.1098	0.0327	0.1098	0.0305	0.1098	0.028
0.115	0.0555	0.115	0.0492	0.115	0.0464	0.115	0.0438	0.115	0.0416	0.115	0.0378	0.115	0.0332
0.1204	0.0647	0.1204	0.058	0.1204	0.0542	0.1204	0.0508	0.1204	0.0478	0.1204	0.0424	0.1204	0.036
0.1262	0.0719	0.1262	0.0617	0.1262	0.0571	0.1262	0.0532	0.1262	0.0497	0.1262	0.0437	0.1262	0.0378
0.1322	0.0761	0.1322	0.0652	0.1322	0.06	0.1322	0.0561	0.1322	0.0525	0.1322	0.0466	0.1322	0.0398
0.1385	0.0785	0.1385	0.0671	0.1385	0.0608	0.1385	0.0561	0.1385	0.0525	0.1385	0.0466	0.1385	0.0398
0.1451	0.0789	0.1451	0.0676	0.1451	0.0612	0.1451	0.0561	0.1451	0.0525	0.1451	0.0466	0.1451	0.0407
0.152	0.0789	0.152	0.0676	0.152	0.0612	0.152	0.0564	0.152	0.0534	0.152	0.0482	0.152	0.0426
0.1592	0.0789	0.1592	0.0676	0.1592	0.0612	0.1592	0.0564	0.1592	0.0534	0.1592	0.0482	0.1592	0.0435
0.1668	0.0789	0.1668	0.0676	0.1668	0.0612	0.1668	0.0564	0.1668	0.0534	0.1668	0.0482	0.1668	0.0435
0.1748	0.0789	0.1748	0.0676	0.1748	0.0612	0.1748	0.0564	0.1748	0.0534	0.1748	0.0482	0.1748	0.0435
0.1831	0.0789	0.1831	0.0676	0.1831	0.0612	0.1831	0.0564	0.1831	0.0534	0.1831	0.0482	0.1831	0.0435
0.1918	0.0789	0.1918	0.0676	0.1918	0.0612	0.1918	0.0562	0.1918	0.0532	0.1918	0.048	0.1918	0.0435
0.2009	0.0789	0.2009	0.0676	0.2009	0.0612	0.2009	0.0562	0.2009	0.0532	0.2009	0.0478	0.2009	0.0435
0.2105	0.0734	0.2105	0.0632	0.2105	0.0596	0.2105	0.0562	0.2105	0.0532	0.2105	0.049	0.2105	0.0468
0.2205	0.0683	0.2205	0.0622	0.2205	0.0587	0.2205	0.0559	0.2205	0.0547	0.2205	0.0527	0.2205	0.0501
0.231	0.0647	0.231	0.0623	0.231	0.0609	0.231	0.0595	0.231	0.0583	0.231	0.056	0.231	0.0532
0.242	0.0759	0.242	0.0684	0.242	0.0646	0.242	0.0627	0.242	0.0614	0.242	0.0589	0.242	0.0561
0.2535	0.1097	0.2535	0.0914	0.2535	0.0822	0.2535	0.0748	0.2535	0.069	0.2535	0.0615	0.2535	0.0585
0.2656	0.1215	0.2656	0.0949	0.2656	0.0825	0.2656	0.0748	0.2656	0.069	0.2656	0.0636	0.2656	0.0602
0.2783	0.1215	0.2783	0.0949	0.2783	0.0825	0.2783	0.0776	0.2783	0.0734	0.2783	0.0664	0.2783	0.0612
0.2915	0.1215	0.2915	0.1001	0.2915	0.0932	0.2915	0.0871	0.2915	0.0817	0.2915	0.0726	0.2915	0.0624
0.3054	0.1358	0.3054	0.1179	0.3054	0.1078	0.3054	0.099	0.3054	0.0914	0.3054	0.0795	0.3054	0.0671
0.3199	0.164	0.3199	0.1266	0.3199	0.1152	0.3199	0.1054	0.3199	0.097	0.3199	0.0837	0.3199	0.0716
0.3352	0.1864	0.3352	0.1319	0.3352	0.1152	0.3352	0.1054	0.3352	0.097	0.3352	0.0843	0.3352	0.0745
0.3511	0.2149	0.3511	0.1624	0.3511	0.1375	0.3511	0.1182	0.3511	0.1047	0.3511	0.0907	0.3511	0.0762
0.3678	0.2149	0.3678	0.1624	0.3678	0.1375	0.3678	0.1252	0.3678	0.1164	0.3678	0.104	0.3678	0.09

0.3853	0.2149	0.3853	0.1624	0.3853	0.1446	0.3853	0.1356	0.3853	0.1276	0.3853	0.1141	0.3853	0.0986
0.4037	0.2149	0.4037	0.1624	0.4037	0.1446	0.4037	0.1356	0.4037	0.1276	0.4037	0.1144	0.4037	0.1004
0.4229	0.2162	0.4229	0.1627	0.4229	0.1446	0.4229	0.1356	0.4229	0.1276	0.4229	0.1144	0.4229	0.1004
0.4431	0.3426	0.4431	0.2319	0.4431	0.1895	0.4431	0.1592	0.4431	0.1381	0.4431	0.1184	0.4431	0.1069
0.4642	0.3426	0.4642	0.2319	0.4642	0.1921	0.4642	0.1724	0.4642	0.1573	0.4642	0.1361	0.4642	0.116
0.4863	0.3426	0.4863	0.2319	0.4863	0.1921	0.4863	0.1742	0.4863	0.1618	0.4863	0.1445	0.4863	0.1231
0.5094	0.3426	0.5094	0.2319	0.5094	0.1986	0.5094	0.1844	0.5094	0.1729	0.5094	0.1523	0.5094	0.1276
0.5337	0.3621	0.5337	0.2644	0.5337	0.2284	0.5337	0.2033	0.5337	0.1829	0.5337	0.1523	0.5337	0.1276
0.5591	0.3621	0.5591	0.2742	0.5591	0.238	0.5591	0.2093	0.5591	0.1863	0.5591	0.1548	0.5591	0.1353
0.5857	0.3621	0.5857	0.2791	0.5857	0.2469	0.5857	0.2206	0.5857	0.1991	0.5857	0.1715	0.5857	0.1521
0.6136	0.3621	0.6136	0.2791	0.6136	0.2469	0.6136	0.2206	0.6136	0.1993	0.6136	0.1818	0.6136	0.1615
0.6428	0.3694	0.6428	0.2791	0.6428	0.2469	0.6428	0.2213	0.6428	0.2086	0.6428	0.1933	0.6428	0.1748
0.6734	0.3694	0.6734	0.2906	0.6734	0.2657	0.6734	0.2429	0.6734	0.2288	0.6734	0.2108	0.6734	0.1877
0.7055	0.4317	0.7055	0.3543	0.7055	0.3133	0.7055	0.279	0.7055	0.2569	0.7055	0.2257	0.7055	0.1944
0.7391	0.5134	0.7391	0.4029	0.7391	0.3524	0.7391	0.3115	0.7391	0.278	0.7391	0.2281	0.7391	0.1944
0.7743	0.5998	0.7743	0.4518	0.7743	0.3831	0.7743	0.331	0.7743	0.2909	0.7743	0.2351	0.7743	0.2186
0.8111	0.7728	0.8111	0.458	0.8111	0.3831	0.8111	0.331	0.8111	0.2909	0.8111	0.2586	0.8111	0.2434
0.8497	0.7728	0.8497	0.458	0.8497	0.3831	0.8497	0.3436	0.8497	0.3138	0.8497	0.2842	0.8497	0.2671
0.8902	0.7728	0.8902	0.458	0.8902	0.388	0.8902	0.3627	0.8902	0.3375	0.8902	0.3097	0.8902	0.2901
0.9326	0.9974	0.9326	0.5856	0.9326	0.4664	0.9326	0.3986	0.9326	0.3523	0.9326	0.3345	0.9326	0.3123
0.977	0.9974	0.977	0.5962	0.977	0.5269	0.977	0.4456	0.977	0.3864	0.977	0.3568	0.977	0.3322
1.0235	0.9974	1.0235	0.5962	1.0235	0.5269	1.0235	0.4456	1.0235	0.3963	1.0235	0.375	1.0235	0.3489
1.0723	0.9974	1.0723	0.5962	1.0723	0.5269	1.0723	0.4578	1.0723	0.4362	1.0723	0.3969	1.0723	0.362
1.1233	1.022	1.1233	0.6338	1.1233	0.5306	1.1233	0.5028	1.1233	0.4775	1.1233	0.432	1.1233	0.3768
1.1768	1.022	1.1768	0.6338	1.1768	0.6129	1.1768	0.5399	1.1768	0.5088	1.1768	0.4574	1.1768	0.3977
1.2328	1.022	1.2328	0.6338	1.2328	0.6129	1.2328	0.5399	1.2328	0.5088	1.2328	0.4606	1.2328	0.4062
1.2916	1.022	1.2916	0.8562	1.2916	0.7174	1.2916	0.624	1.2916	0.5564	1.2916	0.4677	1.2916	0.4071
1.353	1.022	1.353	0.9365	1.353	0.781	1.353	0.6757	1.353	0.6023	1.353	0.5084	1.353	0.4311
1.4175	1.0636	1.4175	0.9365	1.4175	0.8087	1.4175	0.6853	1.4175	0.6424	1.4175	0.5953	1.4175	0.4919
1.485	1.2052	1.485	0.988	1.485	0.8866	1.485	0.6853	1.485	0.6424	1.485	0.6264	1.485	0.511
1.5557	1.4673	1.5557	1.0882	1.5557	0.8988	1.5557	0.6853	1.5557	0.6427	1.5557	0.6264	1.5557	0.5133
1.6298	1.4673	1.6298	1.0882	1.6298	0.8988	1.6298	0.7781	1.6298	0.7205	1.6298	0.6315	1.6298	0.5443
1.7074	1.4673	1.7074	1.0882	1.7074	0.9509	1.7074	0.8465	1.7074	0.7818	1.7074	0.6721	1.7074	0.5582
1.7887	1.9337	1.7887	1.1866	1.7887	1.0454	1.7887	0.9314	1.7887	0.8343	1.7887	0.6827	1.7887	0.5914
1.8738	1.9337	1.8738	1.1866	1.8738	1.0454	1.8738	0.9314	1.8738	0.8343	1.8738	0.6909	1.8738	0.6195
1.963	1.9337	1.963	1.2264	1.963	1.0454	1.963	0.9314	1.963	0.8343	1.963	0.7213	1.963	0.6444
2.0565	1.9337	2.0565	1.2264	2.0565	1.0454	2.0565	0.9314	2.0565	0.8343	2.0565	0.7554	2.0565	0.6649
2.1544	1.9337	2.1544	1.2264	2.1544	1.0454	2.1544	0.9314	2.1544	0.8343	2.1544	0.7745	2.1544	0.6753
2.257	1.6526	2.257	1.2264	2.257	1.0189	2.257	0.9197	2.257	0.8328	2.257	0.7876	2.257	0.6753

2.3645	1.6526	2.3645	1.2264	2.3645	0.9027	2.3645	0.8216	2.3645	0.8042	2.3645	0.7876	2.3645	0.6753
2.4771	1.4968	2.4771	1.1813	2.4771	0.9027	2.4771	0.8216	2.4771	0.8042	2.4771	0.7876	2.4771	0.6753
2.595	1.4968	2.595	1.1813	2.595	0.9027	2.595	0.8216	2.595	0.8042	2.595	0.7876	2.595	0.6753
2.7186	1.5785	2.7186	1.1813	2.7186	0.9027	2.7186	0.8216	2.7186	0.8042	2.7186	0.7876	2.7186	0.6751
2.848	1.5785	2.848	1.1813	2.848	0.9027	2.848	0.8216	2.848	0.8042	2.848	0.771	2.848	0.6514
2.9836	1.5785	2.9836	1.0072	2.9836	0.9027	2.9836	0.8216	2.9836	0.7681	2.9836	0.6806	2.9836	0.5889
3.1257	1.5785	3.1257	0.9135	3.1257	0.7834	3.1257	0.7396	3.1257	0.7002	3.1257	0.6334	3.1257	0.5581
3.2745	1.5785	3.2745	0.8453	3.2745	0.7676	3.2745	0.706	3.2745	0.6569	3.2745	0.5846	3.2745	0.5121
3.4305	1.0503	3.4305	0.7273	3.4305	0.6584	3.4305	0.6105	3.4305	0.5739	3.4305	0.5184	3.4305	0.4584
3.5938	1.0648	3.5938	0.7273	3.5938	0.6584	3.5938	0.6105	3.5938	0.5739	3.5938	0.5184	3.5938	0.4584
3.7649	1.0648	3.7649	0.7273	3.7649	0.6584	3.7649	0.6105	3.7649	0.5739	3.7649	0.5184	3.7649	0.4584
3.9442	1.0648	3.9442	0.7273	3.9442	0.6584	3.9442	0.6105	3.9442	0.5739	3.9442	0.5184	3.9442	0.4584
4.132	1.0648	4.132	0.7273	4.132	0.6584	4.132	0.6105	4.132	0.5739	4.132	0.5204	4.132	0.4587
4.3288	1.0648	4.3288	0.7521	4.3288	0.6945	4.3288	0.6539	4.3288	0.6178	4.3288	0.5556	4.3288	0.4808
4.5349	1.0648	4.5349	0.7892	4.5349	0.6979	4.5349	0.6817	4.5349	0.6537	4.5349	0.5747	4.5349	0.4858
4.7508	1.3052	4.7508	0.7892	4.7508	0.6979	4.7508	0.6817	4.7508	0.6702	4.7508	0.5747	4.7508	0.4858
4.977	1.3052	4.977	0.7892	4.977	0.6979	4.977	0.6817	4.977	0.6702	4.977	0.5747	4.977	0.4858
5.214	1.3052	5.214	0.7892	5.214	0.6979	5.214	0.6817	5.214	0.6702	5.214	0.5747	5.214	0.4858
5.4623	1.3052	5.4623	0.7892	5.4623	0.6979	5.4623	0.6817	5.4623	0.6702	5.4623	0.5747	5.4623	0.4858
5.7224	1.5193	5.7224	0.7892	5.7224	0.6979	5.7224	0.6817	5.7224	0.6702	5.7224	0.568	5.7224	0.4651
5.9948	1.5193	5.9948	0.7892	5.9948	0.6979	5.9948	0.6817	5.9948	0.6343	5.9948	0.5423	5.9948	0.4627
6.2803	1.5193	6.2803	0.7477	6.2803	0.6873	6.2803	0.6133	6.2803	0.5671	6.2803	0.5154	6.2803	0.4687
6.5793	1.5193	6.5793	0.7477	6.5793	0.6873	6.5793	0.6133	6.5793	0.5619	6.5793	0.5154	6.5793	0.4777
6.8926	1.5193	6.8926	0.7477	6.8926	0.6832	6.8926	0.6059	6.8926	0.5619	6.8926	0.5081	6.8926	0.4777
7.2208	1.5193	7.2208	0.7477	7.2208	0.6832	7.2208	0.6059	7.2208	0.5619	7.2208	0.5081	7.2208	0.4777
7.5646	1.5193	7.5646	0.7477	7.5646	0.6832	7.5646	0.5969	7.5646	0.5534	7.5646	0.5081	7.5646	0.4777
7.9248	1.5193	7.9248	0.7477	7.9248	0.6832	7.9248	0.5857	7.9248	0.5403	7.9248	0.5081	7.9248	0.4777
8.3022	1.2327	8.3022	0.6751	8.3022	0.5995	8.3022	0.5656	8.3022	0.5394	8.3022	0.508	8.3022	0.4774
8.6975	0.9775	8.6975	0.6751	8.6975	0.5995	8.6975	0.5656	8.6975	0.5394	8.6975	0.5041	8.6975	0.4735
9.1116	0.9295	9.1116	0.5846	9.1116	0.5348	9.1116	0.5193	9.1116	0.5065	9.1116	0.4867	9.1116	0.4695
9.5455	0.823	9.5455	0.5551	9.5455	0.5348	9.5455	0.5193	9.5455	0.5065	9.5455	0.4859	9.5455	0.4651
10	0.742	10	0.5551	10	0.5348	10	0.5193	10	0.5065	10	0.4859	10	0.4651
10.4762	0.742	10.4762	0.5551	10.4762	0.5348	10.4762	0.5193	10.4762	0.5065	10.4762	0.4855	10.4762	0.4609
10.975	0.742	10.975	0.5121	10.975	0.5044	10.975	0.4954	10.975	0.4859	10.975	0.4687	10.975	0.4468
11.4976	0.7067	11.4976	0.5121	11.4976	0.4824	11.4976	0.4755	11.4976	0.4693	11.4976	0.4577	11.4976	0.4423
12.045	0.7067	12.045	0.5026	12.045	0.4753	12.045	0.4651	12.045	0.4586	12.045	0.4489	12.045	0.436
12.6186	0.7067	12.6186	0.4664	12.6186	0.4572	12.6186	0.4527	12.6186	0.4481	12.6186	0.4393	12.6186	0.4274
13.2194	0.7067	13.2194	0.4531	13.2194	0.4433	13.2194	0.4378	13.2194	0.4336	13.2194	0.4263	13.2194	0.4166
13.8489	0.4879	13.8489	0.4205	13.8489	0.4173	13.8489	0.4169	13.8489	0.4158	13.8489	0.412	13.8489	0.4049

14.5083	0.4879	14.5083	0.4205	14.5083	0.4147	14.5083	0.4103	14.5083	0.4068	14.5083	0.4011	14.5083	0.394
15.1991	0.4879	15.1991	0.4145	15.1991	0.4024	15.1991	0.3966	15.1991	0.393	15.1991	0.3882	15.1991	0.3825
15.9228	0.464	15.9228	0.3946	15.9228	0.3783	15.9228	0.3773	15.9228	0.3774	15.9228	0.3753	15.9228	0.3712
16.681	0.464	16.681	0.3946	16.681	0.3783	16.681	0.3694	16.681	0.366	16.681	0.3635	16.681	0.3605
17.4753	0.497	17.4753	0.3813	17.4753	0.3644	17.4753	0.3552	17.4753	0.3513	17.4753	0.352	17.4753	0.3511
18.3074	0.497	18.3074	0.3813	18.3074	0.3644	18.3074	0.3552	18.3074	0.35	18.3074	0.3471	18.3074	0.3445
19.1791	0.497	19.1791	0.3813	19.1791	0.3644	19.1791	0.3552	19.1791	0.35	19.1791	0.3449	19.1791	0.3419
20.0923	0.497	20.0923	0.3574	20.0923	0.3499	20.0923	0.347	20.0923	0.3445	20.0923	0.3407	20.0923	0.3381
21.049	0.497	21.049	0.3574	21.049	0.3499	21.049	0.347	21.049	0.3445	21.049	0.3407	21.049	0.3371
22.0513	0.497	22.0513	0.3574	22.0513	0.3499	22.0513	0.347	22.0513	0.3445	22.0513	0.3407	22.0513	0.3371
23.1013	0.497	23.1013	0.3574	23.1013	0.3521	23.1013	0.3479	23.1013	0.3445	23.1013	0.3407	23.1013	0.3371
24.2013	0.497	24.2013	0.3574	24.2013	0.3521	24.2013	0.3479	24.2013	0.3445	24.2013	0.3407	24.2013	0.3371
25.3536	0.3847	25.3536	0.3574	25.3536	0.3521	25.3536	0.3479	25.3536	0.3445	25.3536	0.3396	25.3536	0.3356
26.5609	0.3847	26.5609	0.3574	26.5609	0.3521	26.5609	0.3479	26.5609	0.3445	26.5609	0.3396	26.5609	0.3356
27.8256	0.3766	27.8256	0.3574	27.8256	0.3521	27.8256	0.3479	27.8256	0.3445	27.8256	0.3393	27.8256	0.334
29.1505	0.3766	29.1505	0.3422	29.1505	0.3374	29.1505	0.335	29.1505	0.3348	29.1505	0.3331	29.1505	0.3297
30.5386	0.3766	30.5386	0.3422	30.5386	0.3374	30.5386	0.3349	30.5386	0.3325	30.5386	0.3287	30.5386	0.3247
31.9927	0.3766	31.9927	0.3422	31.9927	0.3313	31.9927	0.326	31.9927	0.323	31.9927	0.3199	31.9927	0.3178
33.516	0.3014	33.516	0.3015	33.516	0.3016	33.516	0.3036	33.516	0.306	33.516	0.3088	33.516	0.3105
35.1119	0.3014	35.1119	0.3015	35.1119	0.3016	35.1119	0.3019	35.1119	0.3025	35.1119	0.3043	35.1119	0.3061
36.7838	0.3014	36.7838	0.3015	36.7838	0.3016	36.7838	0.3019	36.7838	0.3022	36.7838	0.3029	36.7838	0.3039
38.5353	0.3014	38.5353	0.3015	38.5353	0.3016	38.5353	0.3017	38.5353	0.3018	38.5353	0.3021	38.5353	0.3027
40.3702	0.301	40.3702	0.301	40.3702	0.3011	40.3702	0.3011	40.3702	0.3012	40.3702	0.3014	40.3702	0.3016
42.2924	0.3004	42.2924	0.3004	42.2924	0.3004	42.2924	0.3004	42.2924	0.3005	42.2924	0.3006	42.2924	0.3007
44.3062	0.2996	44.3062	0.2997	44.3062	0.2997	44.3062	0.2997	44.3062	0.2997	44.3062	0.2998	44.3062	0.2999
46.4159	0.2989	46.4159	0.2989	46.4159	0.2989	46.4159	0.2989	46.4159	0.2989	46.4159	0.299	46.4159	0.2991
48.626	0.2982	48.626	0.2982	48.626	0.2982	48.626	0.2982	48.626	0.2982	48.626	0.2982	48.626	0.2983
50.9414	0.2975	50.9414	0.2975	50.9414	0.2975	50.9414	0.2975	50.9414	0.2975	50.9414	0.2975	50.9414	0.2975

RPP-WTP Pretreatment Facility ISRS
Calc No.: 24590-PTF-S0C-S15T-00005, Rev. 0B

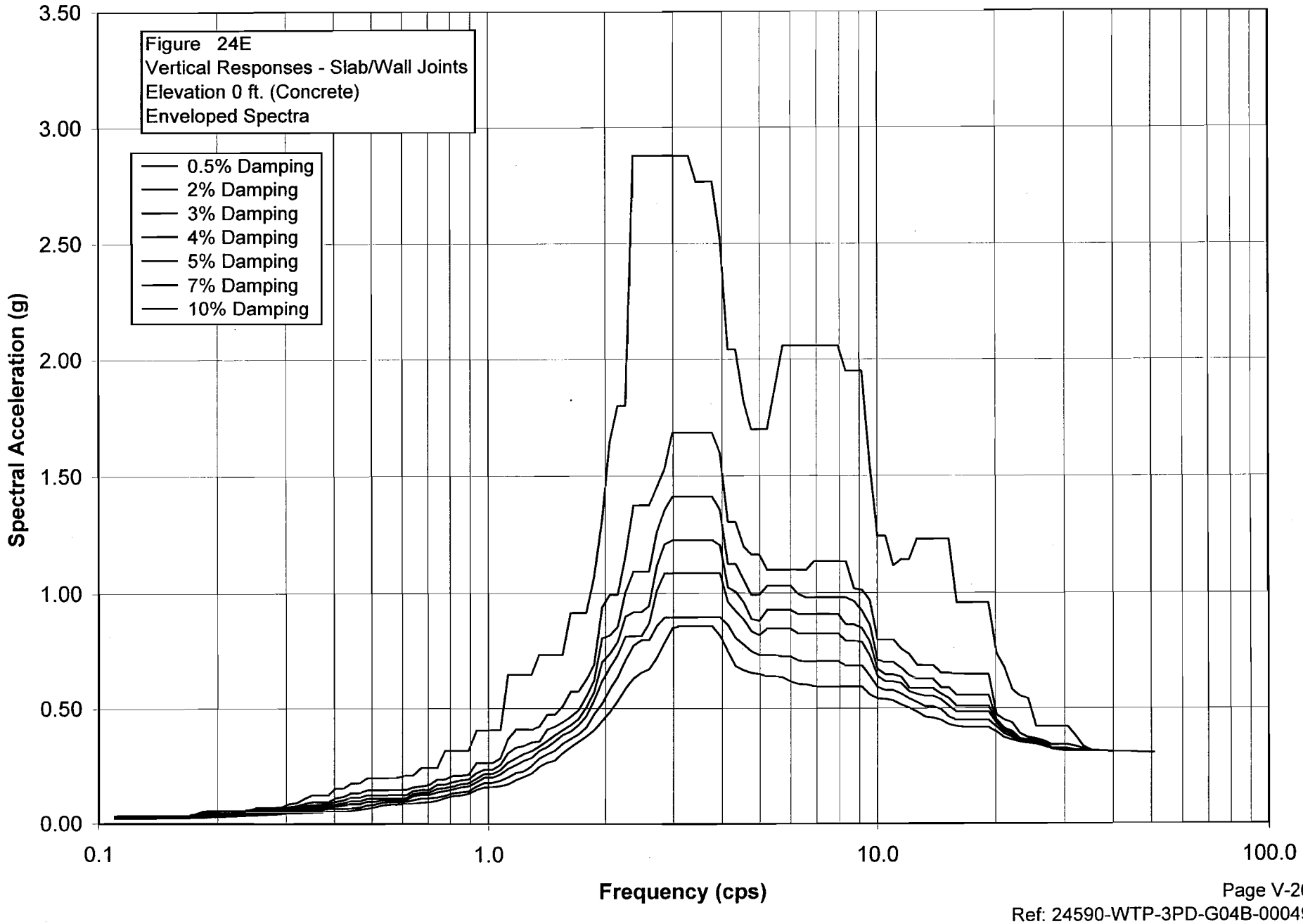

S_PTEE024.grf
RPP-WTP Pretreatment Facility ISRS
Calc No.: 24590-PTF-S0C-S15T-00005, Rev. 0B
Frequency (cps)
Spectral Acceleration (g)
Figure 24E
Vertical Responses - Slab/Wall Joints
Elevation 0 ft. (Concrete)
Enveloped Spectra

Damping	0.50%	Damping	2%	Damping	3%	Damping	4%	Damping	5%	Damping	7%	Damping	10%
Freq.	Accel.	Freq.	Accel.	Freq.	Accel.	Freq.	Accel.	Freq.	Accel.	Freq.	Accel.	Freq.	Accel.
0.1098	0.0329	0.1098	0.0294	0.1098	0.0275	0.1098	0.0263	0.1098	0.0254	0.1098	0.0236	0.1098	0.0217
0.115	0.0347	0.115	0.0311	0.115	0.029	0.115	0.0271	0.115	0.0257	0.115	0.024	0.115	0.022
0.1204	0.0347	0.1204	0.0312	0.1204	0.0291	0.1204	0.0272	0.1204	0.0257	0.1204	0.024	0.1204	0.022
0.1262	0.0349	0.1262	0.0312	0.1262	0.0291	0.1262	0.0272	0.1262	0.0257	0.1262	0.024	0.1262	0.022
0.1322	0.0349	0.1322	0.0312	0.1322	0.0291	0.1322	0.0272	0.1322	0.0257	0.1322	0.024	0.1322	0.0221
0.1385	0.035	0.1385	0.0313	0.1385	0.0292	0.1385	0.0272	0.1385	0.0261	0.1385	0.0243	0.1385	0.0223
0.1451	0.035	0.1451	0.0313	0.1451	0.0292	0.1451	0.0273	0.1451	0.0261	0.1451	0.0243	0.1451	0.0223
0.152	0.0351	0.152	0.0313	0.152	0.0292	0.152	0.0273	0.152	0.0262	0.152	0.0249	0.152	0.0235
0.1592	0.0351	0.1592	0.0313	0.1592	0.0292	0.1592	0.0282	0.1592	0.0275	0.1592	0.0262	0.1592	0.0246
0.1668	0.0351	0.1668	0.0313	0.1668	0.0297	0.1668	0.0289	0.1668	0.0282	0.1668	0.0269	0.1668	0.0252
0.1748	0.0422	0.1748	0.0358	0.1748	0.0323	0.1748	0.0296	0.1748	0.0282	0.1748	0.0269	0.1748	0.0257
0.1831	0.0535	0.1831	0.0445	0.1831	0.0398	0.1831	0.0358	0.1831	0.0324	0.1831	0.0272	0.1831	0.026
0.1918	0.0577	0.1918	0.0478	0.1918	0.0425	0.1918	0.038	0.1918	0.0347	0.1918	0.0319	0.1918	0.0287
0.2009	0.0577	0.2009	0.0478	0.2009	0.0425	0.2009	0.0392	0.2009	0.0373	0.2009	0.034	0.2009	0.0302
0.2105	0.0577	0.2105	0.0478	0.2105	0.0425	0.2105	0.0392	0.2105	0.0374	0.2105	0.0347	0.2105	0.0322
0.2205	0.0577	0.2205	0.0478	0.2205	0.0432	0.2205	0.0416	0.2205	0.0402	0.2205	0.0377	0.2205	0.0346
0.231	0.058	0.231	0.0493	0.231	0.0463	0.231	0.0438	0.231	0.0422	0.231	0.0392	0.231	0.0355
0.242	0.0624	0.242	0.0554	0.242	0.0513	0.242	0.0476	0.242	0.0442	0.242	0.0392	0.242	0.0355
0.2535	0.0713	0.2535	0.0623	0.2535	0.0574	0.2535	0.0532	0.2535	0.0496	0.2535	0.044	0.2535	0.0384
0.2656	0.0713	0.2656	0.0623	0.2656	0.0574	0.2656	0.0532	0.2656	0.0496	0.2656	0.044	0.2656	0.0384
0.2783	0.0713	0.2783	0.0623	0.2783	0.0574	0.2783	0.0532	0.2783	0.0496	0.2783	0.044	0.2783	0.0396
0.2915	0.0743	0.2915	0.0666	0.2915	0.0624	0.2915	0.0587	0.2915	0.0554	0.2915	0.0502	0.2915	0.0442
0.3054	0.0875	0.3054	0.0758	0.3054	0.0693	0.3054	0.0641	0.3054	0.0603	0.3054	0.0539	0.3054	0.0468
0.3199	0.0921	0.3199	0.0797	0.3199	0.0728	0.3199	0.067	0.3199	0.0619	0.3199	0.0539	0.3199	0.0469
0.3352	0.1105	0.3352	0.0889	0.3352	0.0786	0.3352	0.0705	0.3352	0.0642	0.3352	0.0553	0.3352	0.0475
0.3511	0.1251	0.3511	0.0953	0.3511	0.0825	0.3511	0.0725	0.3511	0.0663	0.3511	0.0577	0.3511	0.0492
0.3678	0.1251	0.3678	0.0953	0.3678	0.0848	0.3678	0.0775	0.3678	0.0712	0.3678	0.0613	0.3678	0.0512

0.3853	0.1251	0.3853	0.0957	0.3853	0.0881	0.3853	0.0808	0.3853	0.0753	0.3853	0.0657	0.3853	0.0549
0.4037	0.1549	0.4037	0.1124	0.4037	0.0974	0.4037	0.0858	0.4037	0.0767	0.4037	0.0657	0.4037	0.0549
0.4229	0.1549	0.4229	0.1189	0.4229	0.1035	0.4229	0.0912	0.4229	0.0813	0.4229	0.0671	0.4229	0.0549
0.4431	0.1769	0.4431	0.1354	0.4431	0.1155	0.4431	0.0999	0.4431	0.0876	0.4431	0.0699	0.4431	0.0582
0.4642	0.1769	0.4642	0.1354	0.4642	0.1155	0.4642	0.0999	0.4642	0.0876	0.4642	0.0733	0.4642	0.063
0.4863	0.1981	0.4863	0.1469	0.4863	0.1252	0.4863	0.1094	0.4863	0.0976	0.4863	0.0813	0.4863	0.0674
0.5094	0.1981	0.5094	0.1469	0.5094	0.1252	0.5094	0.1094	0.5094	0.0976	0.5094	0.0854	0.5094	0.0741
0.5337	0.1981	0.5337	0.1469	0.5337	0.1252	0.5337	0.111	0.5337	0.1042	0.5337	0.0936	0.5337	0.0818
0.5591	0.1981	0.5591	0.1469	0.5591	0.1252	0.5591	0.111	0.5591	0.1047	0.5591	0.0963	0.5591	0.0856
0.5857	0.2017	0.5857	0.1489	0.5857	0.1267	0.5857	0.111	0.5857	0.1056	0.5857	0.0968	0.5857	0.086
0.6136	0.2095	0.6136	0.1489	0.6136	0.1267	0.6136	0.1134	0.6136	0.1056	0.6136	0.0968	0.6136	0.086
0.6428	0.2095	0.6428	0.1592	0.6428	0.144	0.6428	0.1315	0.6428	0.1212	0.6428	0.1051	0.6428	0.0888
0.6734	0.2431	0.6734	0.1645	0.6734	0.1488	0.6734	0.1378	0.6734	0.1281	0.6734	0.112	0.6734	0.0942
0.7055	0.2431	0.7055	0.1697	0.7055	0.1488	0.7055	0.1378	0.7055	0.1281	0.7055	0.1134	0.7055	0.0964
0.7391	0.2431	0.7391	0.1929	0.7391	0.1715	0.7391	0.1536	0.7391	0.1387	0.7391	0.1162	0.7391	0.102
0.7743	0.3175	0.7743	0.1939	0.7743	0.1721	0.7743	0.1574	0.7743	0.145	0.7743	0.1247	0.7743	0.1138
0.8111	0.3175	0.8111	0.209	0.8111	0.1824	0.8111	0.1628	0.8111	0.1507	0.8111	0.1354	0.8111	0.1227
0.8497	0.3175	0.8497	0.2096	0.8497	0.1901	0.8497	0.1739	0.8497	0.1602	0.8497	0.1387	0.8497	0.1251
0.8902	0.3175	0.8902	0.2137	0.8902	0.1942	0.8902	0.1779	0.8902	0.1643	0.8902	0.143	0.8902	0.1326
0.9326	0.4048	0.9326	0.2629	0.9326	0.221	0.9326	0.1969	0.9326	0.1816	0.9326	0.1635	0.9326	0.1486
0.977	0.4048	0.977	0.2629	0.977	0.2351	0.977	0.2163	0.977	0.2009	0.977	0.1792	0.977	0.1594
1.0235	0.4048	1.0235	0.2629	1.0235	0.2351	1.0235	0.2163	1.0235	0.2009	1.0235	0.1799	1.0235	0.1605
1.0723	0.4048	1.0723	0.284	1.0723	0.2556	1.0723	0.2329	1.0723	0.2147	1.0723	0.1885	1.0723	0.1656
1.1233	0.6478	1.1233	0.3694	1.1233	0.3066	1.1233	0.2666	1.1233	0.2389	1.1233	0.2034	1.1233	0.1728
1.1768	0.6478	1.1768	0.4092	1.1768	0.3316	1.1768	0.2847	1.1768	0.2551	1.1768	0.2216	1.1768	0.1912
1.2328	0.6478	1.2328	0.4092	1.2328	0.338	1.2328	0.3029	1.2328	0.2737	1.2328	0.2287	1.2328	0.2053
1.2916	0.6478	1.2916	0.4092	1.2916	0.354	1.2916	0.3162	1.2916	0.2852	1.2916	0.251	1.2916	0.2185
1.353	0.7347	1.353	0.4213	1.353	0.3577	1.353	0.336	1.353	0.3164	1.353	0.2841	1.353	0.2475
1.4175	0.7347	1.4175	0.4733	1.4175	0.4091	1.4175	0.3602	1.4175	0.3347	1.4175	0.3026	1.4175	0.2665
1.485	0.7347	1.485	0.4733	1.485	0.4217	1.485	0.3846	1.485	0.3589	1.485	0.318	1.485	0.2749
1.5557	0.7347	1.5557	0.5093	1.5557	0.4416	1.5557	0.4075	1.5557	0.3855	1.5557	0.3483	1.5557	0.3069
1.6298	0.9163	1.6298	0.5735	1.6298	0.4647	1.6298	0.4283	1.6298	0.4013	1.6298	0.3692	1.6298	0.3333
1.7074	0.9163	1.7074	0.5735	1.7074	0.4912	1.7074	0.4549	1.7074	0.4281	1.7074	0.3889	1.7074	0.3565
1.7887	0.9163	1.7887	0.6252	1.7887	0.5523	1.7887	0.5056	1.7887	0.4672	1.7887	0.4188	1.7887	0.3802
1.8738	1.0657	1.8738	0.6899	1.8738	0.6207	1.8738	0.5714	1.8738	0.5353	1.8738	0.4752	1.8738	0.4067
1.963	1.309	1.963	0.9405	1.963	0.8061	1.963	0.7024	1.963	0.6201	1.963	0.5214	1.963	0.447
2.0565	1.6456	2.0565	0.9926	2.0565	0.8189	2.0565	0.7387	2.0565	0.6771	2.0565	0.5832	2.0565	0.4847
2.1544	1.8009	2.1544	0.9926	2.1544	0.8564	2.1544	0.7912	2.1544	0.735	2.1544	0.6387	2.1544	0.5339
2.257	1.8009	2.257	1.1559	2.257	1.0045	2.257	0.9012	2.257	0.8146	2.257	0.7109	2.257	0.5868

2.3645	2.8799	2.3645	1.3727	2.3645	1.0904	2.3645	0.9196	2.3645	0.8166	2.3645	0.7747	2.3645	0.6314
2.4771	2.8799	2.4771	1.3727	2.4771	1.0904	2.4771	0.9196	2.4771	0.8166	2.4771	0.7973	2.4771	0.6564
2.595	2.8799	2.595	1.3727	2.595	1.0904	2.595	0.9452	2.595	0.8693	2.595	0.7973	2.595	0.6706
2.7186	2.8799	2.7186	1.4539	2.7186	1.2603	2.7186	1.1174	2.7186	1.0126	2.7186	0.8596	2.7186	0.723
2.848	2.8799	2.848	1.5317	2.848	1.354	2.848	1.2068	2.848	1.0834	2.848	0.8973	2.848	0.7882
2.9836	2.8799	2.9836	1.6869	2.9836	1.4122	2.9836	1.2244	2.9836	1.0848	2.9836	0.8973	2.9836	0.8498
3.1257	2.8799	3.1257	1.6869	3.1257	1.4122	3.1257	1.2244	3.1257	1.0848	3.1257	0.8973	3.1257	0.8582
3.2745	2.8799	3.2745	1.6869	3.2745	1.4122	3.2745	1.2244	3.2745	1.0848	3.2745	0.8973	3.2745	0.8582
3.4305	2.7652	3.4305	1.6869	3.4305	1.4122	3.4305	1.2244	3.4305	1.0848	3.4305	0.8973	3.4305	0.8582
3.5938	2.7652	3.5938	1.6869	3.5938	1.4122	3.5938	1.2244	3.5938	1.0848	3.5938	0.8973	3.5938	0.8582
3.7649	2.7652	3.7649	1.6869	3.7649	1.4122	3.7649	1.2244	3.7649	1.0848	3.7649	0.8973	3.7649	0.8582
3.9442	2.5281	3.9442	1.5986	3.9442	1.3527	3.9442	1.2028	3.9442	1.0834	3.9442	0.8973	3.9442	0.817
4.132	2.0437	4.132	1.301	4.132	1.1226	4.132	1.0243	4.132	0.9633	4.132	0.8631	4.132	0.7478
4.3288	2.0437	4.3288	1.301	4.3288	1.1226	4.3288	1.0061	4.3288	0.9227	4.3288	0.8061	4.3288	0.6837
4.5349	1.8207	4.5349	1.1967	4.5349	1.0554	4.5349	0.9611	4.5349	0.8876	4.5349	0.7772	4.5349	0.6655
4.7508	1.7008	4.7508	1.1624	4.7508	0.9915	4.7508	0.8891	4.7508	0.8354	4.7508	0.7494	4.7508	0.6545
4.977	1.7008	4.977	1.1624	4.977	0.9915	4.977	0.8809	4.977	0.8192	4.977	0.7321	4.977	0.65
5.214	1.7008	5.214	1.0975	5.214	1.0304	5.214	0.9266	5.214	0.846	5.214	0.7319	5.214	0.6389
5.4623	1.8735	5.4623	1.0975	5.4623	1.0304	5.4623	0.9266	5.4623	0.846	5.4623	0.7319	5.4623	0.6389
5.7224	2.0602	5.7224	1.0975	5.7224	1.0304	5.7224	0.9266	5.7224	0.846	5.7224	0.726	5.7224	0.6355
5.9948	2.0602	5.9948	1.0975	5.9948	1.0304	5.9948	0.9266	5.9948	0.846	5.9948	0.726	5.9948	0.6171
6.2803	2.0602	6.2803	1.0975	6.2803	0.9936	6.2803	0.9089	6.2803	0.8253	6.2803	0.7087	6.2803	0.6055
6.5793	2.0602	6.5793	1.0975	6.5793	0.9797	6.5793	0.9089	6.5793	0.8253	6.5793	0.7045	6.5793	0.6033
6.8926	2.0602	6.8926	1.1327	6.8926	0.9797	6.8926	0.9089	6.8926	0.8253	6.8926	0.7045	6.8926	0.596
7.2208	2.0602	7.2208	1.1327	7.2208	0.9797	7.2208	0.9089	7.2208	0.8253	7.2208	0.7045	7.2208	0.5928
7.5646	2.0602	7.5646	1.1327	7.5646	0.9797	7.5646	0.9089	7.5646	0.8253	7.5646	0.7045	7.5646	0.5938
7.9248	2.0602	7.9248	1.1327	7.9248	0.9797	7.9248	0.9089	7.9248	0.8253	7.9248	0.7045	7.9248	0.5938
8.3022	1.9504	8.3022	1.1327	8.3022	0.9797	8.3022	0.8643	8.3022	0.7929	8.3022	0.6856	8.3022	0.5938
8.6975	1.9504	8.6975	1.0187	8.6975	0.9639	8.6975	0.8643	8.6975	0.7929	8.6975	0.6856	8.6975	0.5938
9.1116	1.9504	9.1116	1.0121	9.1116	0.9236	9.1116	0.8486	9.1116	0.788	9.1116	0.6856	9.1116	0.5938
9.5455	1.5548	9.5455	0.9674	9.5455	0.8614	9.5455	0.7897	9.5455	0.7297	9.5455	0.641	9.5455	0.5601
10	1.2412	10	0.7976	10	0.711	10	0.6704	10	0.6403	10	0.5913	10	0.5423
10.4762	1.2412	10.4762	0.7976	10.4762	0.7005	10.4762	0.6467	10.4762	0.616	10.4762	0.5777	10.4762	0.5402
10.975	1.1134	10.975	0.7976	10.975	0.7005	10.975	0.6467	10.975	0.616	10.975	0.5777	10.975	0.5337
11.4976	1.1405	11.4976	0.7588	11.4976	0.6751	11.4976	0.6377	11.4976	0.6083	11.4976	0.5631	11.4976	0.5155
12.045	1.1405	12.045	0.7357	12.045	0.6444	12.045	0.589	12.045	0.5732	12.045	0.5422	12.045	0.5023
12.6186	1.2275	12.6186	0.6893	12.6186	0.6274	12.6186	0.5862	12.6186	0.5625	12.6186	0.5262	12.6186	0.4844
13.2194	1.2275	13.2194	0.6871	13.2194	0.6274	13.2194	0.5862	13.2194	0.5538	13.2194	0.5083	13.2194	0.4638
13.8489	1.2275	13.8489	0.6871	13.8489	0.6274	13.8489	0.5862	13.8489	0.5538	13.8489	0.5083	13.8489	0.4598

14.5083	1.2275	14.5083	0.6536	14.5083	0.5901	14.5083	0.5632	14.5083	0.5383	14.5083	0.4957	14.5083	0.4501
15.1991	1.2275	15.1991	0.6536	15.1991	0.5893	15.1991	0.5436	15.1991	0.5098	15.1991	0.4637	15.1991	0.431
15.9228	0.9578	15.9228	0.648	15.9228	0.557	15.9228	0.5105	15.9228	0.4847	15.9228	0.45	15.9228	0.4229
16.681	0.9578	16.681	0.648	16.681	0.557	16.681	0.5105	16.681	0.4847	16.681	0.45	16.681	0.4185
17.4753	0.9578	17.4753	0.648	17.4753	0.557	17.4753	0.5105	17.4753	0.4847	17.4753	0.45	17.4753	0.4181
18.3074	0.9578	18.3074	0.648	18.3074	0.557	18.3074	0.5105	18.3074	0.4847	18.3074	0.45	18.3074	0.4181
19.1791	0.9578	19.1791	0.648	19.1791	0.557	19.1791	0.5105	19.1791	0.4847	19.1791	0.45	19.1791	0.4181
20.0923	0.7395	20.0923	0.4726	20.0923	0.4506	20.0923	0.4448	20.0923	0.4372	20.0923	0.4208	20.0923	0.3993
21.049	0.6778	21.049	0.4505	21.049	0.4139	21.049	0.4083	21.049	0.4023	21.049	0.3903	21.049	0.3744
22.0513	0.5811	22.0513	0.4381	22.0513	0.4001	22.0513	0.3907	22.0513	0.3854	22.0513	0.376	22.0513	0.3641
23.1013	0.5542	23.1013	0.392	23.1013	0.3693	23.1013	0.3648	23.1013	0.3627	23.1013	0.3583	23.1013	0.3544
24.2013	0.5425	24.2013	0.3749	24.2013	0.3654	24.2013	0.3619	24.2013	0.3593	24.2013	0.355	24.2013	0.3497
25.3536	0.4219	25.3536	0.3696	25.3536	0.3651	25.3536	0.3607	25.3536	0.3568	25.3536	0.3507	25.3536	0.3446
26.5609	0.4219	26.5609	0.36	26.5609	0.3524	26.5609	0.3478	26.5609	0.3444	26.5609	0.3397	26.5609	0.3359
27.8256	0.4219	27.8256	0.3433	27.8256	0.3297	27.8256	0.3277	27.8256	0.3262	27.8256	0.3247	27.8256	0.3258
29.1505	0.4219	29.1505	0.3433	29.1505	0.3274	29.1505	0.3214	29.1505	0.3202	29.1505	0.3186	29.1505	0.3186
30.5386	0.4219	30.5386	0.3433	30.5386	0.3274	30.5386	0.3214	30.5386	0.3167	30.5386	0.316	30.5386	0.3153
31.9927	0.3814	31.9927	0.3366	31.9927	0.3197	31.9927	0.3172	31.9927	0.3167	31.9927	0.316	31.9927	0.3153
33.516	0.3355	33.516	0.3269	33.516	0.3197	33.516	0.3172	33.516	0.3167	33.516	0.316	33.516	0.3153
35.1119	0.319	35.1119	0.3183	35.1119	0.3177	35.1119	0.3172	35.1119	0.3167	35.1119	0.316	35.1119	0.3153
36.7838	0.3163	36.7838	0.316	36.7838	0.3158	36.7838	0.3157	36.7838	0.3155	36.7838	0.3151	36.7838	0.3146
38.5353	0.3145	38.5353	0.3144	38.5353	0.3143	38.5353	0.3142	38.5353	0.3141	38.5353	0.3139	38.5353	0.3136
40.3702	0.3131	40.3702	0.313	40.3702	0.3129	40.3702	0.3129	40.3702	0.3128	40.3702	0.3128	40.3702	0.3126
42.2924	0.3119	42.2924	0.3118	42.2924	0.3118	42.2924	0.3118	42.2924	0.3117	42.2924	0.3117	42.2924	0.3116
44.3062	0.3108	44.3062	0.3108	44.3062	0.3108	44.3062	0.3108	44.3062	0.3108	44.3062	0.3107	44.3062	0.3107
46.4159	0.3099	46.4159	0.3099	46.4159	0.3099	46.4159	0.3098	46.4159	0.3098	46.4159	0.3098	46.4159	0.3098
48.626	0.309	48.626	0.309	48.626	0.309	48.626	0.309	48.626	0.309	48.626	0.309	48.626	0.309
50.9414	0.3083	50.9414	0.3083	50.9414	0.3083	50.9414	0.3084	50.9414	0.3084	50.9414	0.3084	50.9414	0.3084

RPP-WTP Pretreatment Facility ISRS
Calc No.: 24590-PTF-S0C-S15T-00005, Rev. 0B

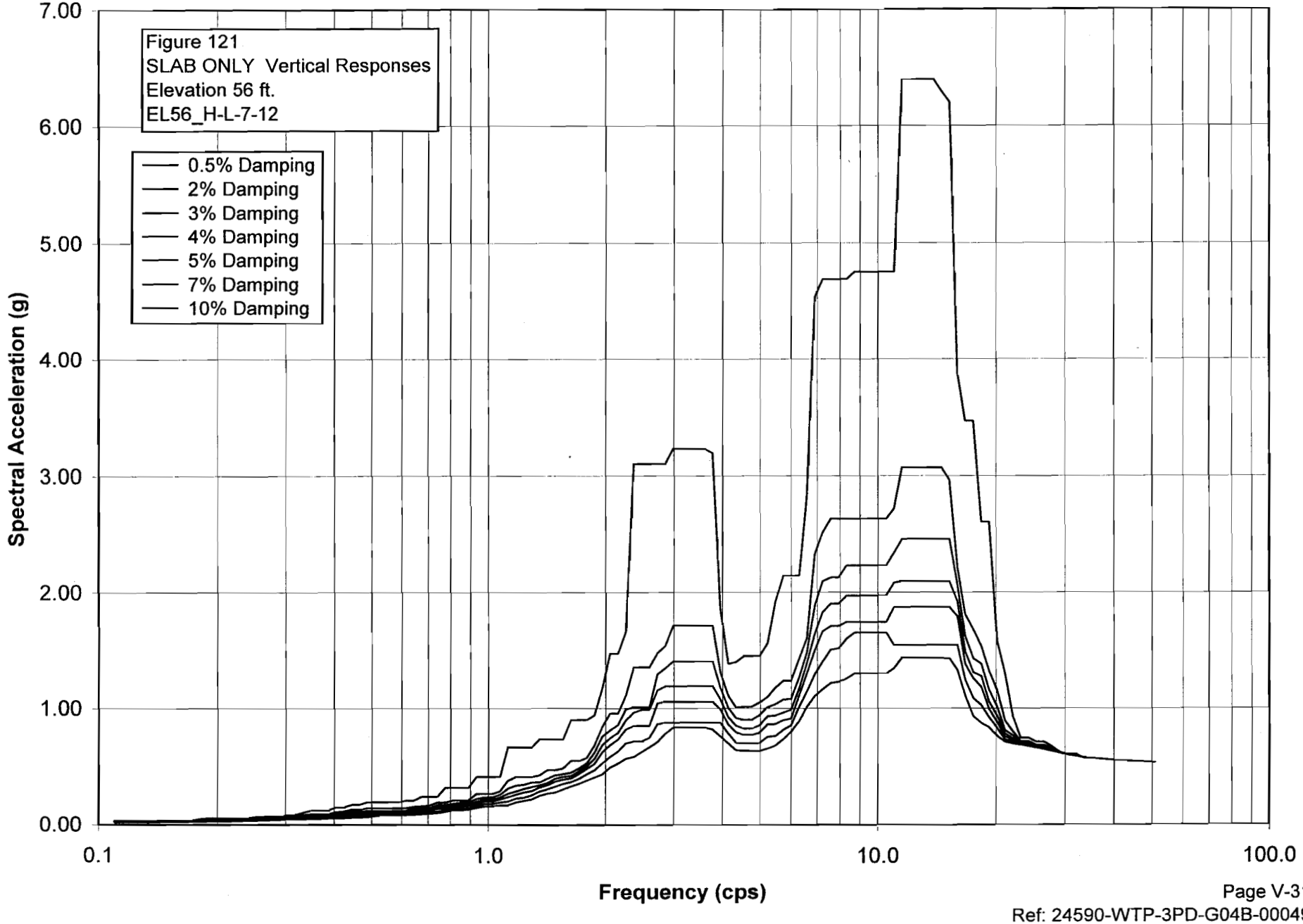

S_PTWW121.grf
RPP-WTP Pretreatment Facility ISRS
Calc No.: 24590-PTF-S0C-S15T-00005, Rev. 0B
Frequency (cps)
Spectral Acceleration (g)
Figure 121
SLAB ONLY Vertical Responses
Elevation 56 ft.
EL56_H-L-7-12

Damping	0.50%	Damping	2%	Damping	3%	Damping	4%	Damping	5%	Damping	7%	Damping	10%
Freq.	Accel.	Freq.	Accel.	Freq.	Accel.	Freq.	Accel.	Freq.	Accel.	Freq.	Accel.	Freq.	Accel.
0.1098	0.033	0.1098	0.0295	0.1098	0.0276	0.1098	0.0264	0.1098	0.0255	0.1098	0.0238	0.1098	0.0219
0.115	0.0348	0.115	0.0311	0.115	0.0291	0.115	0.0272	0.115	0.0258	0.115	0.0241	0.115	0.0223
0.1204	0.0348	0.1204	0.0312	0.1204	0.0291	0.1204	0.0272	0.1204	0.0258	0.1204	0.0241	0.1204	0.0223
0.1262	0.0349	0.1262	0.0312	0.1262	0.0291	0.1262	0.0272	0.1262	0.0258	0.1262	0.0241	0.1262	0.0223
0.1322	0.0349	0.1322	0.0312	0.1322	0.0291	0.1322	0.0272	0.1322	0.0258	0.1322	0.0241	0.1322	0.0223
0.1385	0.0349	0.1385	0.0312	0.1385	0.0291	0.1385	0.0272	0.1385	0.0259	0.1385	0.0242	0.1385	0.0223
0.1451	0.0349	0.1451	0.0312	0.1451	0.0291	0.1451	0.0272	0.1451	0.0259	0.1451	0.0242	0.1451	0.0225
0.152	0.0349	0.152	0.0312	0.152	0.0291	0.152	0.0272	0.152	0.0265	0.152	0.0252	0.152	0.0241
0.1592	0.0349	0.1592	0.0312	0.1592	0.0291	0.1592	0.0284	0.1592	0.0277	0.1592	0.0267	0.1592	0.0254
0.1668	0.0349	0.1668	0.0312	0.1668	0.0298	0.1668	0.0291	0.1668	0.0285	0.1668	0.0274	0.1668	0.0261
0.1748	0.0423	0.1748	0.0358	0.1748	0.0324	0.1748	0.0297	0.1748	0.0285	0.1748	0.0274	0.1748	0.0265
0.1831	0.0536	0.1831	0.0446	0.1831	0.0398	0.1831	0.0358	0.1831	0.0325	0.1831	0.0275	0.1831	0.0268
0.1918	0.0577	0.1918	0.0478	0.1918	0.0425	0.1918	0.0381	0.1918	0.0349	0.1918	0.0321	0.1918	0.0291
0.2009	0.0577	0.2009	0.0478	0.2009	0.0425	0.2009	0.0393	0.2009	0.0375	0.2009	0.0344	0.2009	0.0306
0.2105	0.0577	0.2105	0.0478	0.2105	0.0425	0.2105	0.0397	0.2105	0.038	0.2105	0.0352	0.2105	0.0328
0.2205	0.0577	0.2205	0.0478	0.2205	0.0434	0.2205	0.0419	0.2205	0.0406	0.2205	0.0383	0.2205	0.0353
0.231	0.0581	0.231	0.0495	0.231	0.0465	0.231	0.0443	0.231	0.0427	0.231	0.0397	0.231	0.0362
0.242	0.0625	0.242	0.0555	0.242	0.0514	0.242	0.0477	0.242	0.0444	0.242	0.0397	0.242	0.0362
0.2535	0.0716	0.2535	0.0626	0.2535	0.0577	0.2535	0.0534	0.2535	0.0499	0.2535	0.0445	0.2535	0.0389
0.2656	0.0716	0.2656	0.0626	0.2656	0.0577	0.2656	0.0534	0.2656	0.0499	0.2656	0.0445	0.2656	0.0389
0.2783	0.0716	0.2783	0.0626	0.2783	0.0577	0.2783	0.0534	0.2783	0.0499	0.2783	0.0445	0.2783	0.0401
0.2915	0.0747	0.2915	0.0669	0.2915	0.0624	0.2915	0.0588	0.2915	0.0558	0.2915	0.0508	0.2915	0.0451
0.3054	0.0877	0.3054	0.076	0.3054	0.0697	0.3054	0.0646	0.3054	0.0609	0.3054	0.0546	0.3054	0.0477
0.3199	0.0922	0.3199	0.0798	0.3199	0.073	0.3199	0.0671	0.3199	0.062	0.3199	0.0546	0.3199	0.0477
0.3352	0.111	0.3352	0.0894	0.3352	0.079	0.3352	0.0711	0.3352	0.0649	0.3352	0.0562	0.3352	0.0484
0.3511	0.1257	0.3511	0.0957	0.3511	0.0829	0.3511	0.0729	0.3511	0.067	0.3511	0.0585	0.3511	0.0501
0.3678	0.1257	0.3678	0.0957	0.3678	0.0851	0.3678	0.078	0.3678	0.0719	0.3678	0.062	0.3678	0.0521

0.3853	0.1257	0.3853	0.0961	0.3853	0.0884	0.3853	0.0817	0.3853	0.0762	0.3853	0.0667	0.3853	0.0559
0.4037	0.1552	0.4037	0.113	0.4037	0.0981	0.4037	0.0865	0.4037	0.0773	0.4037	0.0667	0.4037	0.0559
0.4229	0.1552	0.4229	0.1191	0.4229	0.1039	0.4229	0.0918	0.4229	0.082	0.4229	0.0675	0.4229	0.0559
0.4431	0.1777	0.4431	0.1362	0.4431	0.1163	0.4431	0.1007	0.4431	0.0885	0.4431	0.0709	0.4431	0.0607
0.4642	0.1777	0.4642	0.1362	0.4642	0.1163	0.4642	0.1007	0.4642	0.0885	0.4642	0.0743	0.4642	0.0645
0.4863	0.1985	0.4863	0.1471	0.4863	0.1253	0.4863	0.1094	0.4863	0.0974	0.4863	0.0814	0.4863	0.0687
0.5094	0.1985	0.5094	0.1471	0.5094	0.1253	0.5094	0.1094	0.5094	0.0989	0.5094	0.087	0.5094	0.076
0.5337	0.1985	0.5337	0.1471	0.5337	0.1253	0.5337	0.1121	0.5337	0.1057	0.5337	0.0953	0.5337	0.0834
0.5591	0.1985	0.5591	0.1471	0.5591	0.1253	0.5591	0.1121	0.5591	0.1057	0.5591	0.0974	0.5591	0.0867
0.5857	0.2005	0.5857	0.1488	0.5857	0.1268	0.5857	0.1121	0.5857	0.1057	0.5857	0.0974	0.5857	0.0867
0.6136	0.2118	0.6136	0.1488	0.6136	0.1268	0.6136	0.113	0.6136	0.1057	0.6136	0.0974	0.6136	0.0867
0.6428	0.2118	0.6428	0.161	0.6428	0.1458	0.6428	0.1335	0.6428	0.1231	0.6428	0.1073	0.6428	0.0909
0.6734	0.2446	0.6734	0.1647	0.6734	0.1502	0.6734	0.1391	0.6734	0.1296	0.6734	0.1141	0.6734	0.0975
0.7055	0.2446	0.7055	0.1702	0.7055	0.1502	0.7055	0.1391	0.7055	0.1297	0.7055	0.1156	0.7055	0.0986
0.7391	0.2446	0.7391	0.1967	0.7391	0.175	0.7391	0.1569	0.7391	0.1417	0.7391	0.1186	0.7391	0.1045
0.7743	0.3214	0.7743	0.1967	0.7743	0.1771	0.7743	0.1625	0.7743	0.1502	0.7743	0.1301	0.7743	0.1169
0.8111	0.3214	0.8111	0.213	0.8111	0.1859	0.8111	0.1665	0.8111	0.1543	0.8111	0.1391	0.8111	0.1261
0.8497	0.3214	0.8497	0.2135	0.8497	0.1935	0.8497	0.1767	0.8497	0.1633	0.8497	0.1432	0.8497	0.1288
0.8902	0.3214	0.8902	0.2172	0.8902	0.1977	0.8902	0.1814	0.8902	0.1678	0.8902	0.1464	0.8902	0.1364
0.9326	0.4138	0.9326	0.2697	0.9326	0.2279	0.9326	0.2035	0.9326	0.1879	0.9326	0.1688	0.9326	0.1524
0.977	0.4138	0.977	0.2697	0.977	0.2419	0.977	0.2225	0.977	0.2066	0.977	0.1839	0.977	0.1636
1.0235	0.4138	1.0235	0.2697	1.0235	0.2419	1.0235	0.2225	1.0235	0.2066	1.0235	0.1863	1.0235	0.1646
1.0723	0.4138	1.0723	0.2936	1.0723	0.265	1.0723	0.2418	1.0723	0.2238	1.0723	0.1974	1.0723	0.1722
1.1233	0.6656	1.1233	0.3815	1.1233	0.3148	1.1233	0.2725	1.1233	0.2434	1.1233	0.2056	1.1233	0.1743
1.1768	0.6656	1.1768	0.4149	1.1768	0.3396	1.1768	0.292	1.1768	0.2651	1.1768	0.2307	1.1768	0.1986
1.2328	0.6656	1.2328	0.4149	1.2328	0.3472	1.2328	0.3122	1.2328	0.2829	1.2328	0.2384	1.2328	0.2121
1.2916	0.6656	1.2916	0.4154	1.2916	0.3673	1.2916	0.3281	1.2916	0.2961	1.2916	0.258	1.2916	0.2233
1.353	0.7352	1.353	0.4269	1.353	0.3673	1.353	0.3448	1.353	0.3251	1.353	0.2922	1.353	0.2546
1.4175	0.7352	1.4175	0.4722	1.4175	0.4009	1.4175	0.3625	1.4175	0.3436	1.4175	0.3109	1.4175	0.2743
1.485	0.7352	1.485	0.4722	1.485	0.4287	1.485	0.3999	1.485	0.3751	1.485	0.3332	1.485	0.2839
1.5557	0.7352	1.5557	0.4852	1.5557	0.4395	1.5557	0.415	1.5557	0.3934	1.5557	0.3559	1.5557	0.3097
1.6298	0.9015	1.6298	0.5521	1.6298	0.4513	1.6298	0.4238	1.6298	0.4018	1.6298	0.3721	1.6298	0.3337
1.7074	0.9015	1.7074	0.5521	1.7074	0.4862	1.7074	0.4612	1.7074	0.4392	1.7074	0.3978	1.7074	0.3566
1.7887	0.9015	1.7887	0.5762	1.7887	0.5303	1.7887	0.5052	1.7887	0.4812	1.7887	0.4371	1.7887	0.3827
1.8738	0.9435	1.8738	0.683	1.8738	0.6193	1.8738	0.5672	1.8738	0.5244	1.8738	0.4712	1.8738	0.4109
1.963	1.1781	1.963	0.8458	1.963	0.7609	1.963	0.6885	1.963	0.6261	1.963	0.53	1.963	0.4366
2.0565	1.4722	2.0565	0.9587	2.0565	0.8148	2.0565	0.7472	2.0565	0.6869	2.0565	0.5856	2.0565	0.4943
2.1544	1.4722	2.1544	0.9587	2.1544	0.8589	2.1544	0.7934	2.1544	0.7347	2.1544	0.6319	2.1544	0.5285
2.257	1.6581	2.257	1.1094	2.257	0.9923	2.257	0.8986	2.257	0.8226	2.257	0.7018	2.257	0.5689

2.3645	3.1044	2.3645	1.3561	2.3645	1.0122	2.3645	0.9664	2.3645	0.8503	2.3645	0.719	2.3645	0.5849
2.4771	3.1044	2.4771	1.3561	2.4771	1.0122	2.4771	0.9901	2.4771	0.8519	2.4771	0.719	2.4771	0.6283
2.595	3.1044	2.595	1.3561	2.595	1.0122	2.595	0.9901	2.595	0.8519	2.595	0.7497	2.595	0.6688
2.7186	3.1044	2.7186	1.4793	2.7186	1.2977	2.7186	1.1587	2.7186	1.0446	2.7186	0.8675	2.7186	0.7137
2.848	3.1044	2.848	1.5392	2.848	1.349	2.848	1.1927	2.848	1.0583	2.848	0.8783	2.848	0.7856
2.9836	3.2341	2.9836	1.714	2.9836	1.407	2.9836	1.1927	2.9836	1.0583	2.9836	0.8783	2.9836	0.8371
3.1257	3.2341	3.1257	1.714	3.1257	1.407	3.1257	1.1927	3.1257	1.0583	3.1257	0.8783	3.1257	0.8371
3.2745	3.2341	3.2745	1.714	3.2745	1.407	3.2745	1.1927	3.2745	1.0583	3.2745	0.8783	3.2745	0.8371
3.4305	3.2341	3.4305	1.714	3.4305	1.407	3.4305	1.1927	3.4305	1.0583	3.4305	0.8783	3.4305	0.8371
3.5938	3.2341	3.5938	1.714	3.5938	1.407	3.5938	1.1927	3.5938	1.0583	3.5938	0.8783	3.5938	0.8371
3.7649	3.1962	3.7649	1.714	3.7649	1.407	3.7649	1.1927	3.7649	1.0583	3.7649	0.8783	3.7649	0.823
3.9442	1.8572	3.9442	1.3131	3.9442	1.1798	3.9442	1.0801	3.9442	0.9935	3.9442	0.8783	3.9442	0.7625
4.132	1.3859	4.132	1.1101	4.132	1.0059	4.132	0.9267	4.132	0.8638	4.132	0.7879	4.132	0.7016
4.3288	1.4004	4.3288	1.01	4.3288	0.9193	4.3288	0.8523	4.3288	0.7981	4.3288	0.7074	4.3288	0.644
4.5349	1.453	4.5349	1.0165	4.5349	0.9043	4.5349	0.8298	4.5349	0.7728	4.5349	0.702	4.5349	0.6353
4.7508	1.453	4.7508	1.0165	4.7508	0.9043	4.7508	0.8298	4.7508	0.7728	4.7508	0.702	4.7508	0.6353
4.977	1.453	4.977	1.0527	4.977	0.9446	4.977	0.8574	4.977	0.7946	4.977	0.7059	4.977	0.6353
5.214	1.5622	5.214	1.1002	5.214	1.013	5.214	0.934	5.214	0.8657	5.214	0.7586	5.214	0.6576
5.4623	1.9198	5.4623	1.1825	5.4623	1.0375	5.4623	0.9404	5.4623	0.8658	5.4623	0.7636	5.4623	0.6822
5.7224	2.1413	5.7224	1.2391	5.7224	1.0781	5.7224	0.9658	5.7224	0.9004	5.7224	0.8178	5.7224	0.7373
5.9948	2.1413	5.9948	1.2391	5.9948	1.0821	5.9948	0.9888	5.9948	0.9125	5.9948	0.8549	5.9948	0.8006
6.2803	2.1413	6.2803	1.4291	6.2803	1.2694	6.2803	1.1734	6.2803	1.1115	6.2803	1.0135	6.2803	0.8904
6.5793	2.8254	6.5793	1.6044	6.5793	1.4817	6.5793	1.3887	6.5793	1.3019	6.5793	1.1439	6.5793	1.0139
6.8926	4.5401	6.8926	2.3318	6.8926	1.8873	6.8926	1.6445	6.8926	1.502	6.8926	1.2963	6.8926	1.1085
7.2208	4.6887	7.2208	2.5167	7.2208	2.0952	7.2208	1.8287	7.2208	1.663	7.2208	1.4026	7.2208	1.1658
7.5646	4.6887	7.5646	2.633	7.5646	2.1261	7.5646	1.9026	7.5646	1.7092	7.5646	1.5057	7.5646	1.2197
7.9248	4.6887	7.9248	2.633	7.9248	2.1261	7.9248	1.9026	7.9248	1.7092	7.9248	1.5186	7.9248	1.2293
8.3022	4.6887	8.3022	2.633	8.3022	2.2308	8.3022	1.9713	8.3022	1.7431	8.3022	1.5994	8.3022	1.2573
8.6975	4.7522	8.6975	2.633	8.6975	2.2308	8.6975	1.9713	8.6975	1.7431	8.6975	1.6517	8.6975	1.3022
9.1116	4.7522	9.1116	2.633	9.1116	2.2308	9.1116	1.9713	9.1116	1.7431	9.1116	1.6517	9.1116	1.3022
9.5455	4.7522	9.5455	2.633	9.5455	2.2308	9.5455	1.9713	9.5455	1.7431	9.5455	1.6517	9.5455	1.3022
10	4.7522	10	2.633	10	2.2308	10	1.9713	10	1.7431	10	1.6517	10	1.3022
10.4762	4.7522	10.4762	2.633	10.4762	2.2308	10.4762	1.9713	10.4762	1.7431	10.4762	1.6517	10.4762	1.3022
10.975	4.7522	10.975	2.7198	10.975	2.3406	10.975	2.0833	10.975	1.8722	10.975	1.5448	10.975	1.3465
11.4976	6.3932	11.4976	3.0713	11.4976	2.4592	11.4976	2.0954	11.4976	1.8722	11.4976	1.5448	11.4976	1.436
12.045	6.3932	12.045	3.0713	12.045	2.4592	12.045	2.0954	12.045	1.8722	12.045	1.5448	12.045	1.436
12.6186	6.3932	12.6186	3.0713	12.6186	2.4592	12.6186	2.0954	12.6186	1.8722	12.6186	1.5448	12.6186	1.436
13.2194	6.3932	13.2194	3.0713	13.2194	2.4592	13.2194	2.0954	13.2194	1.8722	13.2194	1.5448	13.2194	1.436
13.8489	6.3932	13.8489	3.0713	13.8489	2.4592	13.8489	2.0954	13.8489	1.8722	13.8489	1.5448	13.8489	1.436

14.5083	6.2879	14.5083	3.0713	14.5083	2.4592	14.5083	2.0954	14.5083	1.8722	14.5083	1.5448	14.5083	1.4308
15.1991	6.1979	15.1991	2.9655	15.1991	2.4592	15.1991	2.0954	15.1991	1.8722	15.1991	1.5448	15.1991	1.4308
15.9228	3.8738	15.9228	2.2164	15.9228	2.0644	15.9228	1.922	15.9228	1.7933	15.9228	1.5448	15.9228	1.3311
16.681	3.4691	16.681	1.8084	16.681	1.6216	16.681	1.4892	16.681	1.3822	16.681	1.2458	16.681	1.1088
17.4753	3.4691	17.4753	1.6784	17.4753	1.4303	17.4753	1.3119	17.4753	1.2584	17.4753	1.0884	17.4753	0.932
18.3074	2.6063	18.3074	1.5361	18.3074	1.3831	18.3074	1.2784	18.3074	1.1859	18.3074	1.0285	18.3074	0.874
19.1791	2.6063	19.1791	1.3209	19.1791	1.1588	19.1791	1.0576	19.1791	0.9944	19.1791	0.9231	19.1791	0.8367
20.0923	1.5805	20.0923	1.1546	20.0923	1.0136	20.0923	0.9361	20.0923	0.8832	20.0923	0.8312	20.0923	0.7647
21.049	1.3004	21.049	0.8944	21.049	0.8148	21.049	0.7857	21.049	0.758	21.049	0.7323	21.049	0.7132
22.0513	0.9281	22.0513	0.8029	22.0513	0.7675	22.0513	0.7403	22.0513	0.7306	22.0513	0.7155	22.0513	0.6984
23.1013	0.7455	23.1013	0.7175	23.1013	0.7113	23.1013	0.7103	23.1013	0.7074	23.1013	0.6997	23.1013	0.687
24.2013	0.7455	24.2013	0.7175	24.2013	0.7063	24.2013	0.6988	24.2013	0.6932	24.2013	0.6846	24.2013	0.6737
25.3536	0.7105	25.3536	0.6836	25.3536	0.6748	25.3536	0.6729	25.3536	0.6722	25.3536	0.6681	25.3536	0.6599
26.5609	0.7105	26.5609	0.6836	26.5609	0.6748	26.5609	0.6686	26.5609	0.6637	26.5609	0.656	26.5609	0.6468
27.8256	0.6713	27.8256	0.6593	27.8256	0.654	27.8256	0.6496	27.8256	0.6459	27.8256	0.6395	27.8256	0.632
29.1505	0.6193	29.1505	0.6233	29.1505	0.6233	29.1505	0.6227	29.1505	0.6218	29.1505	0.6196	29.1505	0.6158
30.5386	0.6069	30.5386	0.5987	30.5386	0.601	30.5386	0.602	30.5386	0.6025	30.5386	0.6024	30.5386	0.6011
31.9927	0.6069	31.9927	0.5931	31.9927	0.5907	31.9927	0.5898	31.9927	0.5896	31.9927	0.5894	31.9927	0.589
33.516	0.5732	33.516	0.5757	33.516	0.5772	33.516	0.5781	33.516	0.5787	33.516	0.5792	33.516	0.5793
35.1119	0.5711	35.1119	0.5711	35.1119	0.5711	35.1119	0.5712	35.1119	0.5713	35.1119	0.5715	35.1119	0.5715
36.7838	0.5654	36.7838	0.5653	36.7838	0.5653	36.7838	0.5653	36.7838	0.5652	36.7838	0.5652	36.7838	0.565
38.5353	0.5598	38.5353	0.5598	38.5353	0.5598	38.5353	0.5597	38.5353	0.5597	38.5353	0.5596	38.5353	0.5594
40.3702	0.5548	40.3702	0.5547	40.3702	0.5547	40.3702	0.5546	40.3702	0.5546	40.3702	0.5545	40.3702	0.5544
42.2924	0.5501	42.2924	0.5501	42.2924	0.55	42.2924	0.55	42.2924	0.55	42.2924	0.5499	42.2924	0.5498
44.3062	0.5458	44.3062	0.5458	44.3062	0.5458	44.3062	0.5458	44.3062	0.5458	44.3062	0.5457	44.3062	0.5457
46.4159	0.5419	46.4159	0.5419	46.4159	0.5419	46.4159	0.5419	46.4159	0.5419	46.4159	0.5419	46.4159	0.5419
48.626	0.5382	48.626	0.5382	48.626	0.5382	48.626	0.5382	48.626	0.5383	48.626	0.5383	48.626	0.5384
50.9414	0.5347	50.9414	0.5347	50.9414	0.5348	50.9414	0.5348	50.9414	0.5348	50.9414	0.5349	50.9414	0.5351

RPP-WTP Pretreatment Facility ISRS
Calc No.: 24590-PTF-S0C-S15T-00005, Rev. 0B

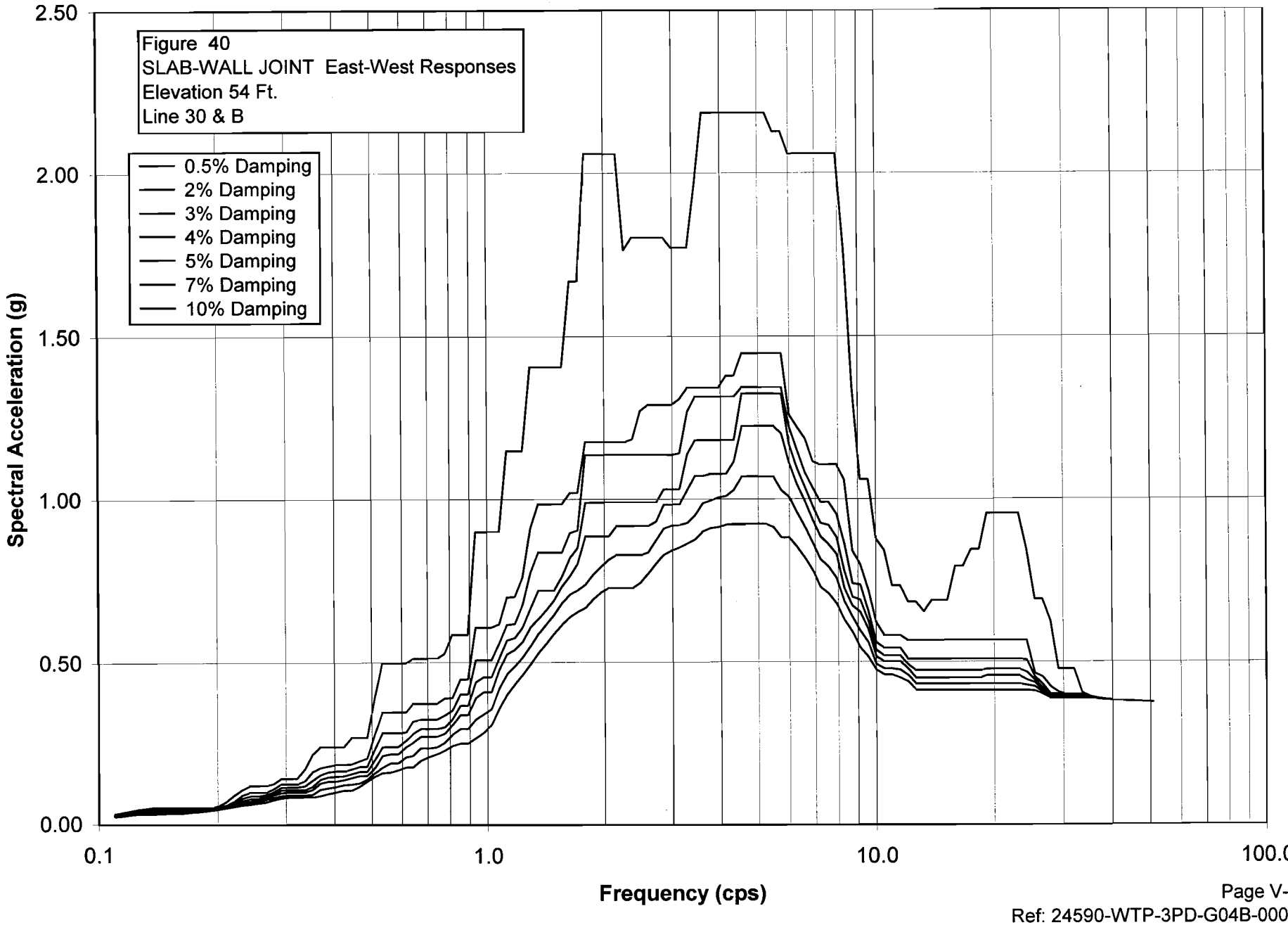

S_PTWW040.grf
RPP-WTP Pretreatment Facility ISRS
Calc No.: 24590-PTF-S0C-S15T-00005, Rev. 0B
Frequency (cps)
Spectral Acceleration (g)
Figure 40
SLAB-WALL JOINT East-West Responses
Elevation 54 Ft.
Line 30 & B

Damping	0.50%	Damping	2%	Damping	3%	Damping	4%	Damping	5%	Damping	7%	Damping	10%
Freq.	Accel.	Freq.	Accel.	Freq.	Accel.	Freq.	Accel.	Freq.	Accel.	Freq.	Accel.	Freq.	Accel.
0.1098	0.0314	0.1098	0.0288	0.1098	0.0276	0.1098	0.0268	0.1098	0.0261	0.1098	0.0248	0.1098	0.0232
0.115	0.0359	0.115	0.033	0.115	0.0315	0.115	0.0301	0.115	0.029	0.115	0.0275	0.115	0.0253
0.1204	0.041	0.1204	0.0383	0.1204	0.0367	0.1204	0.0353	0.1204	0.034	0.1204	0.0316	0.1204	0.0287
0.1262	0.046	0.1262	0.0427	0.1262	0.0407	0.1262	0.0389	0.1262	0.0372	0.1262	0.0344	0.1262	0.0312
0.1322	0.0489	0.1322	0.0442	0.1322	0.0421	0.1322	0.0403	0.1322	0.0385	0.1322	0.0356	0.1322	0.0321
0.1385	0.0518	0.1385	0.0463	0.1385	0.0431	0.1385	0.0403	0.1385	0.0385	0.1385	0.0356	0.1385	0.0321
0.1451	0.0518	0.1451	0.0463	0.1451	0.0431	0.1451	0.0403	0.1451	0.0385	0.1451	0.0356	0.1451	0.0321
0.152	0.0518	0.152	0.0463	0.152	0.0431	0.152	0.0403	0.152	0.0385	0.152	0.0356	0.152	0.0321
0.1592	0.0518	0.1592	0.0463	0.1592	0.0431	0.1592	0.0403	0.1592	0.0385	0.1592	0.0356	0.1592	0.0325
0.1668	0.0518	0.1668	0.0463	0.1668	0.0431	0.1668	0.0403	0.1668	0.0384	0.1668	0.0362	0.1668	0.0352
0.1748	0.0518	0.1748	0.0463	0.1748	0.0431	0.1748	0.041	0.1748	0.0404	0.1748	0.0394	0.1748	0.0379
0.1831	0.0518	0.1831	0.0463	0.1831	0.0455	0.1831	0.0447	0.1831	0.044	0.1831	0.0426	0.1831	0.0406
0.1918	0.0522	0.1918	0.0505	0.1918	0.0496	0.1918	0.0486	0.1918	0.0476	0.1918	0.0458	0.1918	0.0437
0.2009	0.057	0.2009	0.0549	0.2009	0.0536	0.2009	0.0525	0.2009	0.0514	0.2009	0.0497	0.2009	0.0474
0.2105	0.0707	0.2105	0.06	0.2105	0.0586	0.2105	0.0574	0.2105	0.0562	0.2105	0.054	0.2105	0.0516
0.2205	0.0909	0.2205	0.0714	0.2205	0.0643	0.2205	0.0624	0.2205	0.061	0.2205	0.0586	0.2205	0.0558
0.231	0.1079	0.231	0.0907	0.231	0.0814	0.231	0.0735	0.231	0.0674	0.231	0.0631	0.231	0.0595
0.242	0.1196	0.242	0.0993	0.242	0.0884	0.242	0.0793	0.242	0.0715	0.242	0.0667	0.242	0.0622
0.2535	0.1204	0.2535	0.0993	0.2535	0.0884	0.2535	0.0797	0.2535	0.0755	0.2535	0.0695	0.2535	0.0659
0.2656	0.1204	0.2656	0.0993	0.2656	0.0924	0.2656	0.0881	0.2656	0.0841	0.2656	0.0771	0.2656	0.0687
0.2783	0.1255	0.2783	0.1097	0.2783	0.1009	0.2783	0.095	0.2783	0.0907	0.2783	0.0835	0.2783	0.0755
0.2915	0.1425	0.2915	0.1248	0.2915	0.1148	0.2915	0.106	0.2915	0.0982	0.2915	0.0888	0.2915	0.0813
0.3054	0.1425	0.3054	0.1248	0.3054	0.1152	0.3054	0.1069	0.3054	0.0996	0.3054	0.0909	0.3054	0.0841
0.3199	0.1425	0.3199	0.1248	0.3199	0.1152	0.3199	0.1069	0.3199	0.0996	0.3199	0.0909	0.3199	0.0846
0.3352	0.1711	0.3352	0.1346	0.3352	0.1186	0.3352	0.1069	0.3352	0.0996	0.3352	0.0909	0.3352	0.0846
0.3511	0.2173	0.3511	0.163	0.3511	0.137	0.3511	0.117	0.3511	0.1079	0.3511	0.0933	0.3511	0.0846
0.3678	0.2401	0.3678	0.1757	0.3678	0.1531	0.3678	0.1395	0.3678	0.1276	0.3678	0.108	0.3678	0.0887

0.3853	0.2401	0.3853	0.1803	0.3853	0.1622	0.3853	0.1467	0.3853	0.1335	0.3853	0.1124	0.3853	0.0952
0.4037	0.2401	0.4037	0.1853	0.4037	0.1651	0.4037	0.1483	0.4037	0.1343	0.4037	0.1165	0.4037	0.0996
0.4229	0.2401	0.4229	0.1853	0.4229	0.1651	0.4229	0.1497	0.4229	0.1382	0.4229	0.1221	0.4229	0.1054
0.4431	0.2696	0.4431	0.1872	0.4431	0.1712	0.4431	0.1571	0.4431	0.1447	0.4431	0.1242	0.4431	0.1054
0.4642	0.2696	0.4642	0.1963	0.4642	0.179	0.4642	0.1637	0.4642	0.1503	0.4642	0.1279	0.4642	0.1174
0.4863	0.2696	0.4863	0.2048	0.4863	0.1795	0.4863	0.1637	0.4863	0.1503	0.4863	0.1396	0.4863	0.1334
0.5094	0.3933	0.5094	0.2804	0.5094	0.2339	0.5094	0.2007	0.5094	0.1759	0.5094	0.1597	0.5094	0.1486
0.5337	0.498	0.5337	0.3467	0.5337	0.2831	0.5337	0.2394	0.5337	0.2126	0.5337	0.1766	0.5337	0.1593
0.5591	0.498	0.5591	0.3467	0.5591	0.2831	0.5591	0.2394	0.5591	0.2172	0.5591	0.1895	0.5591	0.1611
0.5857	0.498	0.5857	0.3467	0.5857	0.2831	0.5857	0.2394	0.5857	0.2172	0.5857	0.1895	0.5857	0.168
0.6136	0.498	0.6136	0.3467	0.6136	0.2855	0.6136	0.2597	0.6136	0.2392	0.6136	0.2082	0.6136	0.177
0.6428	0.5118	0.6428	0.3731	0.6428	0.3183	0.6428	0.2805	0.6428	0.2523	0.6428	0.2127	0.6428	0.177
0.6734	0.5118	0.6734	0.3731	0.6734	0.3247	0.6734	0.2958	0.6734	0.2722	0.6734	0.2359	0.6734	0.198
0.7055	0.5118	0.7055	0.3731	0.7055	0.3247	0.7055	0.2958	0.7055	0.2722	0.7055	0.2359	0.7055	0.2086
0.7391	0.5118	0.7391	0.3731	0.7391	0.3247	0.7391	0.2958	0.7391	0.2722	0.7391	0.2389	0.7391	0.2175
0.7743	0.5271	0.7743	0.3892	0.7743	0.3374	0.7743	0.3002	0.7743	0.2812	0.7743	0.2528	0.7743	0.2292
0.8111	0.5842	0.8111	0.3905	0.8111	0.3524	0.8111	0.3253	0.8111	0.3077	0.8111	0.2782	0.8111	0.2429
0.8497	0.5842	0.8497	0.4479	0.8497	0.4022	0.8497	0.367	0.8497	0.3388	0.8497	0.2955	0.8497	0.2503
0.8902	0.5842	0.8902	0.4479	0.8902	0.4022	0.8902	0.367	0.8902	0.3388	0.8902	0.2955	0.8902	0.2503
0.9326	0.8993	0.9326	0.6068	0.9326	0.5069	0.9326	0.4394	0.9326	0.3909	0.9326	0.3258	0.9326	0.2677
0.977	0.8993	0.977	0.6068	0.977	0.507	0.977	0.4543	0.977	0.4088	0.977	0.3406	0.977	0.2841
1.0235	0.8993	1.0235	0.6068	1.0235	0.507	1.0235	0.4543	1.0235	0.4088	1.0235	0.3566	1.0235	0.3084
1.0723	0.8993	1.0723	0.6169	1.0723	0.5581	1.0723	0.5126	1.0723	0.4775	1.0723	0.4206	1.0723	0.3593
1.1233	1.1503	1.1233	0.6989	1.1233	0.6146	1.1233	0.567	1.1233	0.5246	1.1233	0.4637	1.1233	0.4009
1.1768	1.1503	1.1768	0.7013	1.1768	0.6177	1.1768	0.5745	1.1768	0.5387	1.1768	0.4887	1.1768	0.4328
1.2328	1.1503	1.2328	0.7602	1.2328	0.676	1.2328	0.6069	1.2328	0.5619	1.2328	0.5151	1.2328	0.4624
1.2916	1.4069	1.2916	0.9112	1.2916	0.7748	1.2916	0.6655	1.2916	0.6075	1.2916	0.5495	1.2916	0.4943
1.353	1.4069	1.353	0.9854	1.353	0.8366	1.353	0.7197	1.353	0.6331	1.353	0.5865	1.353	0.5282
1.4175	1.4069	1.4175	0.9854	1.4175	0.8366	1.4175	0.7197	1.4175	0.6602	1.4175	0.6163	1.4175	0.5576
1.485	1.4069	1.485	0.9854	1.485	0.8366	1.485	0.7197	1.485	0.6898	1.485	0.6458	1.485	0.5873
1.5557	1.4069	1.5557	0.9854	1.5557	0.8366	1.5557	0.7629	1.5557	0.7329	1.5557	0.6815	1.5557	0.6151
1.6298	1.6681	1.6298	1.0205	1.6298	0.8966	1.6298	0.82	1.6298	0.7642	1.6298	0.7076	1.6298	0.6389
1.7074	1.6681	1.7074	1.0205	1.7074	0.9046	1.7074	0.8499	1.7074	0.8016	1.7074	0.7204	1.7074	0.6548
1.7887	2.0604	1.7887	1.1768	1.7887	1.1373	1.7887	0.99	1.7887	0.8859	1.7887	0.7382	1.7887	0.6673
1.8738	2.0604	1.8738	1.1768	1.8738	1.1373	1.8738	0.99	1.8738	0.8859	1.8738	0.7686	1.8738	0.6934
1.963	2.0604	1.963	1.1768	1.963	1.1373	1.963	0.99	1.963	0.8859	1.963	0.7926	1.963	0.7145
2.0565	2.0604	2.0565	1.1768	2.0565	1.1373	2.0565	0.99	2.0565	0.8859	2.0565	0.8132	2.0565	0.7272
2.1544	2.0604	2.1544	1.1768	2.1544	1.1373	2.1544	0.99	2.1544	0.9184	2.1544	0.829	2.1544	0.7272
2.257	1.7622	2.257	1.1768	2.257	1.1373	2.257	0.99	2.257	0.9184	2.257	0.829	2.257	0.7272

2.3645	1.801	2.3645	1.1855	2.3645	1.1373	2.3645	0.99	2.3645	0.9184	2.3645	0.829	2.3645	0.7272
2.4771	1.801	2.4771	1.2722	2.4771	1.1373	2.4771	0.99	2.4771	0.9184	2.4771	0.829	2.4771	0.7436
2.595	1.801	2.595	1.291	2.595	1.1373	2.595	0.99	2.595	0.9184	2.595	0.8354	2.595	0.7711
2.7186	1.801	2.7186	1.291	2.7186	1.1373	2.7186	0.99	2.7186	0.9314	2.7186	0.8739	2.7186	0.802
2.848	1.801	2.848	1.291	2.848	1.1373	2.848	1.0306	2.848	0.9834	2.848	0.9097	2.848	0.8289
2.9836	1.7695	2.9836	1.291	2.9836	1.1373	2.9836	1.0306	2.9836	0.9834	2.9836	0.919	2.9836	0.8422
3.1257	1.7695	3.1257	1.3084	3.1257	1.1422	3.1257	1.0306	3.1257	0.9834	3.1257	0.9212	3.1257	0.8511
3.2745	1.7695	3.2745	1.3427	3.2745	1.2702	3.2745	1.1405	3.2745	1.0295	3.2745	0.9272	3.2745	0.8631
3.4305	1.9605	3.4305	1.3427	3.4305	1.315	3.4305	1.1822	3.4305	1.0726	3.4305	0.9512	3.4305	0.8756
3.5938	2.186	3.5938	1.3427	3.5938	1.315	3.5938	1.1822	3.5938	1.0726	3.5938	0.9875	3.5938	0.9006
3.7649	2.186	3.7649	1.3427	3.7649	1.315	3.7649	1.1822	3.7649	1.0784	3.7649	0.9958	3.7649	0.9115
3.9442	2.186	3.9442	1.3427	3.9442	1.315	3.9442	1.1822	3.9442	1.0784	3.9442	1.0054	3.9442	0.9143
4.132	2.186	4.132	1.3797	4.132	1.315	4.132	1.1822	4.132	1.0784	4.132	1.0098	4.132	0.9215
4.3288	2.186	4.3288	1.3797	4.3288	1.315	4.3288	1.1822	4.3288	1.117	4.3288	1.0287	4.3288	0.9239
4.5349	2.186	4.5349	1.4477	4.5349	1.3442	4.5349	1.3252	4.5349	1.2251	4.5349	1.0703	4.5349	0.9239
4.7508	2.186	4.7508	1.4477	4.7508	1.3442	4.7508	1.3252	4.7508	1.2251	4.7508	1.0703	4.7508	0.9239
4.977	2.186	4.977	1.4477	4.977	1.3442	4.977	1.3252	4.977	1.2251	4.977	1.0703	4.977	0.9239
5.214	2.186	5.214	1.4477	5.214	1.3442	5.214	1.3252	5.214	1.2251	5.214	1.0703	5.214	0.9239
5.4623	2.129	5.4623	1.4477	5.4623	1.3442	5.4623	1.3252	5.4623	1.2251	5.4623	1.0703	5.4623	0.9141
5.7224	2.129	5.7224	1.4477	5.7224	1.3442	5.7224	1.3243	5.7224	1.2019	5.7224	1.0271	5.7224	0.8812
5.9948	2.0602	5.9948	1.2614	5.9948	1.2227	5.9948	1.1692	5.9948	1.1126	5.9948	1.0071	5.9948	0.8812
6.2803	2.0602	6.2803	1.2213	6.2803	1.1509	6.2803	1.0945	6.2803	1.0449	6.2803	0.9577	6.2803	0.8515
6.5793	2.0602	6.5793	1.1878	6.5793	1.0824	6.5793	1.0377	6.5793	0.9937	6.5793	0.9148	6.5793	0.818
6.8926	2.0602	6.8926	1.1162	6.8926	1.0351	6.8926	0.9782	6.8926	0.9346	6.8926	0.8642	6.8926	0.7799
7.2208	2.0602	7.2208	1.107	7.2208	0.9906	7.2208	0.9262	7.2208	0.8836	7.2208	0.813	7.2208	0.7283
7.5646	2.0602	7.5646	1.107	7.5646	0.9906	7.5646	0.9195	7.5646	0.8594	7.5646	0.7912	7.5646	0.7084
7.9248	2.0602	7.9248	1.107	7.9248	0.9536	7.9248	0.8812	7.9248	0.8301	7.9248	0.756	7.9248	0.6785
8.3022	1.7636	8.3022	1.0601	8.3022	0.8626	8.3022	0.7767	8.3022	0.7243	8.3022	0.6848	8.3022	0.6279
8.6975	1.3385	8.6975	0.8395	8.6975	0.7398	8.6975	0.6985	8.6975	0.6715	8.6975	0.6369	8.6975	0.5912
9.1116	1.0611	9.1116	0.798	9.1116	0.7367	9.1116	0.6899	9.1116	0.6522	9.1116	0.5945	9.1116	0.5436
9.5455	1.0611	9.5455	0.7201	9.5455	0.655	9.5455	0.6244	9.5455	0.5998	9.5455	0.5597	9.5455	0.5149
10	0.8759	10	0.6206	10	0.5593	10	0.5358	10	0.516	10	0.493	10	0.4751
10.4762	0.841	10.4762	0.5804	10.4762	0.542	10.4762	0.5187	10.4762	0.5008	10.4762	0.4787	10.4762	0.4612
10.975	0.7327	10.975	0.5804	10.975	0.542	10.975	0.5187	10.975	0.5008	10.975	0.4787	10.975	0.4612
11.4976	0.7327	11.4976	0.5804	11.4976	0.542	11.4976	0.5187	11.4976	0.5008	11.4976	0.4753	11.4976	0.4513
12.045	0.6827	12.045	0.5648	12.045	0.5078	12.045	0.4909	12.045	0.4782	12.045	0.4588	12.045	0.4391
12.6186	0.6827	12.6186	0.5648	12.6186	0.5078	12.6186	0.4736	12.6186	0.4502	12.6186	0.4326	12.6186	0.4147
13.2194	0.6534	13.2194	0.5648	13.2194	0.5078	13.2194	0.4736	13.2194	0.4502	13.2194	0.4326	13.2194	0.414
13.8489	0.6877	13.8489	0.5648	13.8489	0.5078	13.8489	0.4736	13.8489	0.4502	13.8489	0.4326	13.8489	0.414

14.5083	0.6877	14.5083	0.5648	14.5083	0.5078	14.5083	0.4736	14.5083	0.4502	14.5083	0.4326	14.5083	0.414
15.1991	0.6877	15.1991	0.5648	15.1991	0.5078	15.1991	0.4736	15.1991	0.4502	15.1991	0.4326	15.1991	0.414
15.9228	0.7918	15.9228	0.5648	15.9228	0.5078	15.9228	0.4736	15.9228	0.4502	15.9228	0.4326	15.9228	0.414
16.681	0.7918	16.681	0.5648	16.681	0.5078	16.681	0.4736	16.681	0.4502	16.681	0.4326	16.681	0.414
17.4753	0.8433	17.4753	0.5648	17.4753	0.5078	17.4753	0.4736	17.4753	0.4502	17.4753	0.4326	17.4753	0.414
18.3074	0.8433	18.3074	0.5648	18.3074	0.5078	18.3074	0.4736	18.3074	0.4502	18.3074	0.4326	18.3074	0.414
19.1791	0.9548	19.1791	0.5648	19.1791	0.5078	19.1791	0.4778	19.1791	0.4579	19.1791	0.4326	19.1791	0.414
20.0923	0.9548	20.0923	0.5648	20.0923	0.5078	20.0923	0.4778	20.0923	0.4579	20.0923	0.4326	20.0923	0.414
21.049	0.9548	21.049	0.5648	21.049	0.5078	21.049	0.4778	21.049	0.4579	21.049	0.4326	21.049	0.414
22.0513	0.9548	22.0513	0.5648	22.0513	0.5078	22.0513	0.4778	22.0513	0.4579	22.0513	0.4326	22.0513	0.414
23.1013	0.9548	23.1013	0.5648	23.1013	0.5078	23.1013	0.4778	23.1013	0.4579	23.1013	0.4326	23.1013	0.4127
24.2013	0.8433	24.2013	0.5648	24.2013	0.5052	24.2013	0.468	24.2013	0.444	24.2013	0.4282	24.2013	0.4127
25.3536	0.6913	25.3536	0.4652	25.3536	0.4529	25.3536	0.4436	25.3536	0.4358	25.3536	0.4238	25.3536	0.4112
26.5609	0.6913	26.5609	0.4542	26.5609	0.4319	26.5609	0.42	26.5609	0.4138	26.5609	0.4069	26.5609	0.401
27.8256	0.6242	27.8256	0.4234	27.8256	0.4002	27.8256	0.3941	27.8256	0.3925	27.8256	0.3903	27.8256	0.389
29.1505	0.4776	29.1505	0.4074	29.1505	0.4002	29.1505	0.3941	29.1505	0.3925	29.1505	0.3903	29.1505	0.3881
30.5386	0.4776	30.5386	0.3989	30.5386	0.3961	30.5386	0.3941	30.5386	0.3925	30.5386	0.3903	30.5386	0.3881
31.9927	0.4776	31.9927	0.3989	31.9927	0.3961	31.9927	0.3941	31.9927	0.3925	31.9927	0.3903	31.9927	0.3881
33.516	0.4046	33.516	0.3989	33.516	0.3961	33.516	0.3941	33.516	0.3925	33.516	0.3903	33.516	0.3881
35.1119	0.3927	35.1119	0.392	35.1119	0.3914	35.1119	0.3907	35.1119	0.39	35.1119	0.3887	35.1119	0.3871
36.7838	0.3877	36.7838	0.3875	36.7838	0.3873	36.7838	0.3871	36.7838	0.3868	36.7838	0.3862	36.7838	0.3852
38.5353	0.3846	38.5353	0.3845	38.5353	0.3844	38.5353	0.3843	38.5353	0.3842	38.5353	0.3839	38.5353	0.3834
40.3702	0.3824	40.3702	0.3823	40.3702	0.3823	40.3702	0.3822	40.3702	0.3821	40.3702	0.382	40.3702	0.3817
42.2924	0.3807	42.2924	0.3807	42.2924	0.3807	42.2924	0.3806	42.2924	0.3806	42.2924	0.3805	42.2924	0.3803
44.3062	0.3794	44.3062	0.3794	44.3062	0.3793	44.3062	0.3793	44.3062	0.3793	44.3062	0.3792	44.3062	0.3791
46.4159	0.3782	46.4159	0.3782	46.4159	0.3782	46.4159	0.3782	46.4159	0.3782	46.4159	0.3781	46.4159	0.3781
48.626	0.3772	48.626	0.3772	48.626	0.3772	48.626	0.3772	48.626	0.3772	48.626	0.3772	48.626	0.3772
50.9414	0.3762	50.9414	0.3762	50.9414	0.3762	50.9414	0.3762	50.9414	0.3762	50.9414	0.3763	50.9414	0.3763

RPP-WTP Pretreatment Facility ISRS
Calc No.: 24590-PTF-S0C-S15T-00005, Rev. 0B

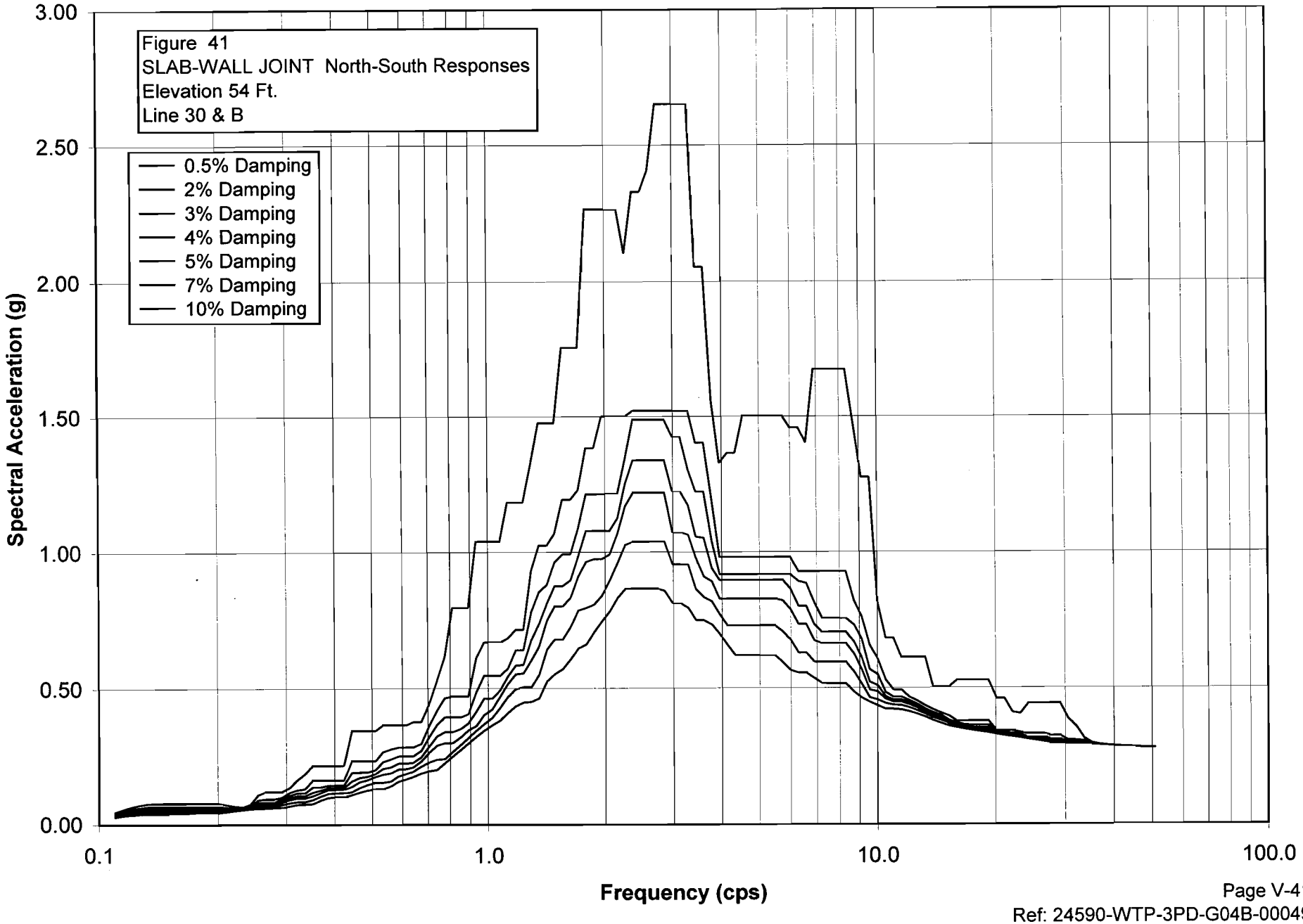

S_PTWW041.grf
RPP-WTP Pretreatment Facility ISRS
Calc No.: 24590-PTF-S0C-S15T-00005, Rev. 0B
Frequency (cps)
Spectral Acceleration (g)
Figure 41
SLAB-WALL JOINT North-South Responses
Elevation 54 Ft.
Line 30 & B

Damping	0.50%	Damping	2%	Damping	3%	Damping	4%	Damping	5%	Damping	7%	Damping	10%
Freq.	Accel.	Freq.	Accel.	Freq.	Accel.	Freq.	Accel.	Freq.	Accel.	Freq.	Accel.	Freq.	Accel.
0.1098	0.0457	0.1098	0.0394	0.1098	0.0365	0.1098	0.0344	0.1098	0.0329	0.1098	0.031	0.1098	0.0285
0.115	0.0556	0.115	0.0493	0.115	0.0465	0.115	0.0441	0.115	0.042	0.115	0.0383	0.115	0.0337
0.1204	0.0648	0.1204	0.0582	0.1204	0.0545	0.1204	0.0512	0.1204	0.0481	0.1204	0.0428	0.1204	0.0364
0.1262	0.0719	0.1262	0.0618	0.1262	0.0572	0.1262	0.0533	0.1262	0.0498	0.1262	0.0438	0.1262	0.0381
0.1322	0.0763	0.1322	0.0654	0.1322	0.0603	0.1322	0.0564	0.1322	0.0528	0.1322	0.0469	0.1322	0.0402
0.1385	0.0787	0.1385	0.0673	0.1385	0.0608	0.1385	0.0564	0.1385	0.0528	0.1385	0.0469	0.1385	0.0402
0.1451	0.079	0.1451	0.0676	0.1451	0.0613	0.1451	0.0564	0.1451	0.0528	0.1451	0.0469	0.1451	0.041
0.152	0.079	0.152	0.0676	0.152	0.0613	0.152	0.0568	0.152	0.0538	0.152	0.0486	0.152	0.043
0.1592	0.079	0.1592	0.0676	0.1592	0.0613	0.1592	0.0568	0.1592	0.0538	0.1592	0.0489	0.1592	0.0439
0.1668	0.079	0.1668	0.0676	0.1668	0.0613	0.1668	0.0568	0.1668	0.0538	0.1668	0.0489	0.1668	0.0439
0.1748	0.079	0.1748	0.0676	0.1748	0.0613	0.1748	0.0568	0.1748	0.0538	0.1748	0.0489	0.1748	0.0439
0.1831	0.0788	0.1831	0.0675	0.1831	0.0612	0.1831	0.0568	0.1831	0.0538	0.1831	0.0489	0.1831	0.0439
0.1918	0.0788	0.1918	0.0675	0.1918	0.0612	0.1918	0.0564	0.1918	0.0533	0.1918	0.0489	0.1918	0.0439
0.2009	0.0788	0.2009	0.0675	0.2009	0.0612	0.2009	0.0564	0.2009	0.0533	0.2009	0.0481	0.2009	0.0439
0.2105	0.0736	0.2105	0.0633	0.2105	0.0597	0.2105	0.0564	0.2105	0.0533	0.2105	0.0493	0.2105	0.0476
0.2205	0.0686	0.2205	0.0625	0.2205	0.0589	0.2205	0.0562	0.2205	0.0551	0.2205	0.053	0.2205	0.0514
0.231	0.065	0.231	0.0626	0.231	0.0612	0.231	0.0599	0.231	0.0587	0.231	0.0568	0.231	0.0549
0.242	0.0761	0.242	0.069	0.242	0.0652	0.242	0.0634	0.242	0.0622	0.242	0.0602	0.242	0.0579
0.2535	0.1102	0.2535	0.0918	0.2535	0.0826	0.2535	0.0754	0.2535	0.0696	0.2535	0.063	0.2535	0.0602
0.2656	0.122	0.2656	0.0953	0.2656	0.0828	0.2656	0.0754	0.2656	0.0696	0.2656	0.0651	0.2656	0.0619
0.2783	0.122	0.2783	0.0953	0.2783	0.083	0.2783	0.0782	0.2783	0.0741	0.2783	0.0673	0.2783	0.0627
0.2915	0.122	0.2915	0.1008	0.2915	0.0938	0.2915	0.0877	0.2915	0.0822	0.2915	0.073	0.2915	0.0628
0.3054	0.1365	0.3054	0.1184	0.3054	0.1084	0.3054	0.0997	0.3054	0.0924	0.3054	0.0806	0.3054	0.0685
0.3199	0.1648	0.3199	0.128	0.3199	0.1165	0.3199	0.1067	0.3199	0.0983	0.3199	0.085	0.3199	0.0741
0.3352	0.1873	0.3352	0.1328	0.3352	0.1165	0.3352	0.1067	0.3352	0.0983	0.3352	0.086	0.3352	0.0763
0.3511	0.2172	0.3511	0.164	0.3511	0.1388	0.3511	0.1193	0.3511	0.1066	0.3511	0.0923	0.3511	0.0773
0.3678	0.2172	0.3678	0.164	0.3678	0.1388	0.3678	0.1271	0.3678	0.1171	0.3678	0.1047	0.3678	0.0905

0.3853	0.2172	0.3853	0.164	0.3853	0.1459	0.3853	0.1368	0.3853	0.1287	0.3853	0.115	0.3853	0.0996
0.4037	0.2172	0.4037	0.164	0.4037	0.1463	0.4037	0.1375	0.4037	0.1298	0.4037	0.117	0.4037	0.1029
0.4229	0.2182	0.4229	0.1641	0.4229	0.1463	0.4229	0.1375	0.4229	0.1298	0.4229	0.117	0.4229	0.1029
0.4431	0.3455	0.4431	0.2344	0.4431	0.1916	0.4431	0.1609	0.4431	0.1405	0.4431	0.1208	0.4431	0.1103
0.4642	0.3455	0.4642	0.2344	0.4642	0.1934	0.4642	0.1736	0.4642	0.1584	0.4642	0.1369	0.4642	0.1193
0.4863	0.3455	0.4863	0.2344	0.4863	0.1934	0.4863	0.177	0.4863	0.1649	0.4863	0.1477	0.4863	0.1262
0.5094	0.3455	0.5094	0.2344	0.5094	0.2012	0.5094	0.1877	0.5094	0.1764	0.5094	0.1559	0.5094	0.1315
0.5337	0.3666	0.5337	0.2671	0.5337	0.2308	0.5337	0.2055	0.5337	0.1848	0.5337	0.1559	0.5337	0.1315
0.5591	0.3666	0.5591	0.2772	0.5591	0.2405	0.5591	0.2113	0.5591	0.1897	0.5591	0.1599	0.5591	0.1423
0.5857	0.3666	0.5857	0.2841	0.5857	0.2515	0.5857	0.225	0.5857	0.2033	0.5857	0.1786	0.5857	0.1594
0.6136	0.3666	0.6136	0.2841	0.6136	0.2515	0.6136	0.225	0.6136	0.2046	0.6136	0.1877	0.6136	0.1676
0.6428	0.3774	0.6428	0.2841	0.6428	0.2515	0.6428	0.2274	0.6428	0.2104	0.6428	0.1953	0.6428	0.176
0.6734	0.3774	0.6734	0.2961	0.6734	0.2703	0.6734	0.247	0.6734	0.2315	0.6734	0.2128	0.6734	0.1884
0.7055	0.4413	0.7055	0.3627	0.7055	0.3214	0.7055	0.2868	0.7055	0.2641	0.7055	0.2285	0.7055	0.1969
0.7391	0.5276	0.7391	0.4178	0.7391	0.3661	0.7391	0.3241	0.7391	0.2898	0.7391	0.2385	0.7391	0.2005
0.7743	0.6173	0.7743	0.4646	0.7743	0.394	0.7743	0.3401	0.7743	0.2988	0.7743	0.2409	0.7743	0.2247
0.8111	0.7973	0.8111	0.4704	0.8111	0.394	0.8111	0.3401	0.8111	0.2988	0.8111	0.2664	0.8111	0.2497
0.8497	0.7973	0.8497	0.4704	0.8497	0.394	0.8497	0.3512	0.8497	0.3205	0.8497	0.2921	0.8497	0.2739
0.8902	0.7973	0.8902	0.4704	0.8902	0.4056	0.8902	0.3726	0.8902	0.3463	0.8902	0.3184	0.8902	0.2984
0.9326	1.0399	0.9326	0.6123	0.9326	0.4865	0.9326	0.4159	0.9326	0.3635	0.9326	0.3454	0.9326	0.323
0.977	1.0399	0.977	0.6684	0.977	0.5476	0.977	0.4627	0.977	0.4028	0.977	0.3702	0.977	0.3455
1.0235	1.0399	1.0235	0.6684	1.0235	0.5476	1.0235	0.4627	1.0235	0.4229	1.0235	0.392	1.0235	0.3654
1.0723	1.0399	1.0723	0.6684	1.0723	0.5476	1.0723	0.4928	1.0723	0.4701	1.0723	0.4292	1.0723	0.3824
1.1233	1.1837	1.1233	0.6849	1.1233	0.5729	1.1233	0.5438	1.1233	0.5167	1.1233	0.4691	1.1233	0.4109
1.1768	1.1837	1.1768	0.7158	1.1768	0.6407	1.1768	0.5849	1.1768	0.5523	1.1768	0.4973	1.1768	0.4345
1.2328	1.1837	1.2328	0.7158	1.2328	0.6407	1.2328	0.5873	1.2328	0.5559	1.2328	0.5047	1.2328	0.4483
1.2916	1.3266	1.2916	0.9325	1.2916	0.7812	1.2916	0.6768	1.2916	0.6028	1.2916	0.5047	1.2916	0.4505
1.353	1.4769	1.353	1.0249	1.353	0.8548	1.353	0.7373	1.353	0.6541	1.353	0.5499	1.353	0.4641
1.4175	1.4769	1.4175	1.0249	1.4175	0.8809	1.4175	0.812	1.4175	0.7486	1.4175	0.6428	1.4175	0.5261
1.485	1.4769	1.485	1.0686	1.485	0.9633	1.485	0.8764	1.485	0.8018	1.485	0.6797	1.485	0.552
1.5557	1.7563	1.5557	1.1934	1.5557	0.9931	1.5557	0.8764	1.5557	0.8018	1.5557	0.6797	1.5557	0.5711
1.6298	1.7563	1.6298	1.1934	1.6298	0.9931	1.6298	0.8977	1.6298	0.8327	1.6298	0.7258	1.6298	0.6071
1.7074	1.7563	1.7074	1.2286	1.7074	1.0877	1.7074	0.9847	1.7074	0.9112	1.7074	0.7864	1.7074	0.6473
1.7887	2.2656	1.7887	1.3832	1.7887	1.2124	1.7887	1.0788	1.7887	0.9652	1.7887	0.7963	1.7887	0.6615
1.8738	2.2656	1.8738	1.3832	1.8738	1.2124	1.8738	1.0788	1.8738	0.9755	1.8738	0.808	1.8738	0.7066
1.963	2.2656	1.963	1.5008	1.963	1.214	1.963	1.0788	1.963	0.9755	1.963	0.841	1.963	0.747
2.0565	2.2656	2.0565	1.5008	2.0565	1.214	2.0565	1.0788	2.0565	0.9919	2.0565	0.8969	2.0565	0.7833
2.1544	2.2656	2.1544	1.5008	2.1544	1.214	2.1544	1.1255	2.1544	1.069	2.1544	0.9614	2.1544	0.8327
2.257	2.1036	2.257	1.5008	2.257	1.3434	2.257	1.2512	2.257	1.1692	2.257	1.0266	2.257	0.866

2.3645	2.329	2.3645	1.5215	2.3645	1.4885	2.3645	1.3388	2.3645	1.2186	2.3645	1.0385	2.3645	0.866
2.4771	2.329	2.4771	1.5215	2.4771	1.4885	2.4771	1.3388	2.4771	1.2186	2.4771	1.0385	2.4771	0.866
2.595	2.4067	2.595	1.5215	2.595	1.4885	2.595	1.3388	2.595	1.2186	2.595	1.0385	2.595	0.866
2.7186	2.6498	2.7186	1.5215	2.7186	1.4885	2.7186	1.3388	2.7186	1.2186	2.7186	1.0385	2.7186	0.866
2.848	2.6498	2.848	1.5215	2.848	1.4885	2.848	1.3388	2.848	1.2186	2.848	1.0385	2.848	0.859
2.9836	2.6498	2.9836	1.5215	2.9836	1.4261	2.9836	1.2238	2.9836	1.0738	2.9836	0.9557	2.9836	0.8126
3.1257	2.6498	3.1257	1.5215	3.1257	1.4261	3.1257	1.2238	3.1257	1.0738	3.1257	0.9557	3.1257	0.8126
3.2745	2.6498	3.2745	1.5215	3.2745	1.3039	3.2745	1.1725	3.2745	1.0646	3.2745	0.9547	3.2745	0.7955
3.4305	2.0528	3.4305	1.4038	3.4305	1.2222	3.4305	1.0569	3.4305	0.9788	3.4305	0.8637	3.4305	0.7503
3.5938	2.0528	3.5938	1.4038	3.5938	1.2222	3.5938	1.0518	3.5938	0.9105	3.5938	0.8342	3.5938	0.75
3.7649	1.5608	3.7649	1.1932	3.7649	1.0412	3.7649	0.9413	3.7649	0.8931	3.7649	0.8185	3.7649	0.734
3.9442	1.3287	3.9442	0.9812	3.9442	0.9181	3.9442	0.8966	3.9442	0.8279	3.9442	0.7711	3.9442	0.6991
4.132	1.3641	4.132	0.9812	4.132	0.9181	4.132	0.8966	4.132	0.8279	4.132	0.7296	4.132	0.6579
4.3288	1.3641	4.3288	0.9812	4.3288	0.9181	4.3288	0.8966	4.3288	0.8279	4.3288	0.7296	4.3288	0.6204
4.5349	1.5022	4.5349	0.9812	4.5349	0.9181	4.5349	0.8966	4.5349	0.8279	4.5349	0.7296	4.5349	0.6209
4.7508	1.5022	4.7508	0.9812	4.7508	0.9181	4.7508	0.8966	4.7508	0.8279	4.7508	0.7296	4.7508	0.6209
4.977	1.5022	4.977	0.9812	4.977	0.9181	4.977	0.8966	4.977	0.8279	4.977	0.7296	4.977	0.6209
5.214	1.5022	5.214	0.9812	5.214	0.9181	5.214	0.8966	5.214	0.8279	5.214	0.7296	5.214	0.6209
5.4623	1.5022	5.4623	0.9812	5.4623	0.9181	5.4623	0.8966	5.4623	0.8279	5.4623	0.7296	5.4623	0.6209
5.7224	1.5022	5.7224	0.9812	5.7224	0.9181	5.7224	0.8966	5.7224	0.8219	5.7224	0.708	5.7224	0.5957
5.9948	1.4583	5.9948	0.9812	5.9948	0.9181	5.9948	0.8652	5.9948	0.7895	5.9948	0.6777	5.9948	0.5667
6.2803	1.4583	6.2803	0.9287	6.2803	0.8928	6.2803	0.8015	6.2803	0.735	6.2803	0.6301	6.2803	0.5563
6.5793	1.4036	6.5793	0.9287	6.5793	0.8853	6.5793	0.8015	6.5793	0.735	6.5793	0.6301	6.5793	0.5563
6.8926	1.6746	6.8926	0.9287	6.8926	0.8143	6.8926	0.7332	6.8926	0.6749	6.8926	0.596	6.8926	0.5361
7.2208	1.6746	7.2208	0.9287	7.2208	0.7566	7.2208	0.7053	7.2208	0.664	7.2208	0.5957	7.2208	0.5178
7.5646	1.6746	7.5646	0.9287	7.5646	0.7566	7.5646	0.7053	7.5646	0.664	7.5646	0.5957	7.5646	0.5164
7.9248	1.6746	7.9248	0.9287	7.9248	0.7566	7.9248	0.7053	7.9248	0.664	7.9248	0.5957	7.9248	0.5164
8.3022	1.6746	8.3022	0.9287	8.3022	0.7566	8.3022	0.7053	8.3022	0.664	8.3022	0.5957	8.3022	0.5164
8.6975	1.4729	8.6975	0.821	8.6975	0.7324	8.6975	0.6697	8.6975	0.6267	8.6975	0.5594	8.6975	0.4859
9.1116	1.274	9.1116	0.7622	9.1116	0.6797	9.1116	0.6114	9.1116	0.568	9.1116	0.5151	9.1116	0.4639
9.5455	1.274	9.5455	0.6572	9.5455	0.5678	9.5455	0.5223	9.5455	0.4931	9.5455	0.4644	9.5455	0.4479
10	0.8156	10	0.6076	10	0.55	10	0.5087	10	0.4868	10	0.4561	10	0.4359
10.4762	0.6827	10.4762	0.5301	10.4762	0.4834	10.4762	0.468	10.4762	0.459	10.4762	0.443	10.4762	0.4225
10.975	0.6827	10.975	0.4925	10.975	0.4664	10.975	0.4557	10.975	0.4481	10.975	0.4376	10.975	0.4225
11.4976	0.6119	11.4976	0.4925	11.4976	0.4664	11.4976	0.4557	11.4976	0.4481	11.4976	0.4355	11.4976	0.4198
12.045	0.6119	12.045	0.4659	12.045	0.4529	12.045	0.4449	12.045	0.4385	12.045	0.4273	12.045	0.413
12.6186	0.6119	12.6186	0.451	12.6186	0.44	12.6186	0.4324	12.6186	0.4264	12.6186	0.4167	12.6186	0.404
13.2194	0.6119	13.2194	0.434	13.2194	0.4222	13.2194	0.4153	13.2194	0.4113	13.2194	0.4038	13.2194	0.393
13.8489	0.5034	13.8489	0.4195	13.8489	0.41	13.8489	0.4038	13.8489	0.3987	13.8489	0.3908	13.8489	0.3809

14.5083	0.5034	14.5083	0.4084	14.5083	0.3993	14.5083	0.3934	14.5083	0.3886	14.5083	0.3804	14.5083	0.3698
15.1991	0.5034	15.1991	0.3967	15.1991	0.3816	15.1991	0.3781	15.1991	0.3753	15.1991	0.3694	15.1991	0.3607
15.9228	0.5283	15.9228	0.3784	15.9228	0.3722	15.9228	0.3691	15.9228	0.3658	15.9228	0.3609	15.9228	0.3552
16.681	0.5283	16.681	0.3784	16.681	0.3648	16.681	0.3604	16.681	0.3576	16.681	0.3537	16.681	0.3491
17.4753	0.5283	17.4753	0.3784	17.4753	0.3631	17.4753	0.354	17.4753	0.3481	17.4753	0.3465	17.4753	0.3438
18.3074	0.5283	18.3074	0.3784	18.3074	0.3631	18.3074	0.354	18.3074	0.3481	18.3074	0.3441	18.3074	0.3401
19.1791	0.5283	19.1791	0.3784	19.1791	0.3631	19.1791	0.354	19.1791	0.3481	19.1791	0.3413	19.1791	0.3359
20.0923	0.4604	20.0923	0.3424	20.0923	0.335	20.0923	0.3322	20.0923	0.3302	20.0923	0.3311	20.0923	0.3297
21.049	0.4604	21.049	0.3424	21.049	0.335	21.049	0.3322	21.049	0.3302	21.049	0.3273	21.049	0.3249
22.0513	0.4108	22.0513	0.3424	22.0513	0.3327	22.0513	0.3298	22.0513	0.3273	22.0513	0.3236	22.0513	0.3204
23.1013	0.4056	23.1013	0.3361	23.1013	0.3298	23.1013	0.3258	23.1013	0.3231	23.1013	0.3195	23.1013	0.3161
24.2013	0.4419	24.2013	0.3316	24.2013	0.317	24.2013	0.3156	24.2013	0.3151	24.2013	0.3135	24.2013	0.3113
25.3536	0.4419	25.3536	0.3316	25.3536	0.317	25.3536	0.3143	25.3536	0.3125	25.3536	0.3096	25.3536	0.3071
26.5609	0.4419	26.5609	0.3316	26.5609	0.317	26.5609	0.31	26.5609	0.3069	26.5609	0.3043	26.5609	0.3027
27.8256	0.4419	27.8256	0.3238	27.8256	0.3108	27.8256	0.3024	27.8256	0.2977	27.8256	0.2969	27.8256	0.298
29.1505	0.4419	29.1505	0.3238	29.1505	0.3108	29.1505	0.3024	29.1505	0.2977	29.1505	0.2963	29.1505	0.2958
30.5386	0.3862	30.5386	0.3077	30.5386	0.3004	30.5386	0.298	30.5386	0.2963	30.5386	0.2943	30.5386	0.2939
31.9927	0.3588	31.9927	0.3077	31.9927	0.3004	31.9927	0.298	31.9927	0.2963	31.9927	0.2943	31.9927	0.2928
33.516	0.3151	33.516	0.3045	33.516	0.3004	33.516	0.298	33.516	0.2963	33.516	0.2943	33.516	0.2928
35.1119	0.2975	35.1119	0.2967	35.1119	0.296	35.1119	0.2953	35.1119	0.2945	35.1119	0.2932	35.1119	0.2918
36.7838	0.2918	36.7838	0.2916	36.7838	0.2915	36.7838	0.2913	36.7838	0.2911	36.7838	0.2906	36.7838	0.2898
38.5353	0.2884	38.5353	0.2884	38.5353	0.2884	38.5353	0.2884	38.5353	0.2883	38.5353	0.2881	38.5353	0.2878
40.3702	0.286	40.3702	0.2861	40.3702	0.2862	40.3702	0.2862	40.3702	0.2861	40.3702	0.2861	40.3702	0.286
42.2924	0.2843	42.2924	0.2843	42.2924	0.2844	42.2924	0.2844	42.2924	0.2844	42.2924	0.2844	42.2924	0.2843
44.3062	0.2828	44.3062	0.2828	44.3062	0.2829	44.3062	0.2829	44.3062	0.2829	44.3062	0.2829	44.3062	0.2829
46.4159	0.2816	46.4159	0.2816	46.4159	0.2816	46.4159	0.2816	46.4159	0.2816	46.4159	0.2816	46.4159	0.2817
48.626	0.2804	48.626	0.2804	48.626	0.2804	48.626	0.2804	48.626	0.2804	48.626	0.2805	48.626	0.2805
50.9414	0.2794	50.9414	0.2794	50.9414	0.2794	50.9414	0.2794	50.9414	0.2794	50.9414	0.2794	50.9414	0.2795

RPP-WTP Pretreatment Facility ISRS
Calc No.: 24590-PTF-S0C-S15T-00005, Rev. 0B

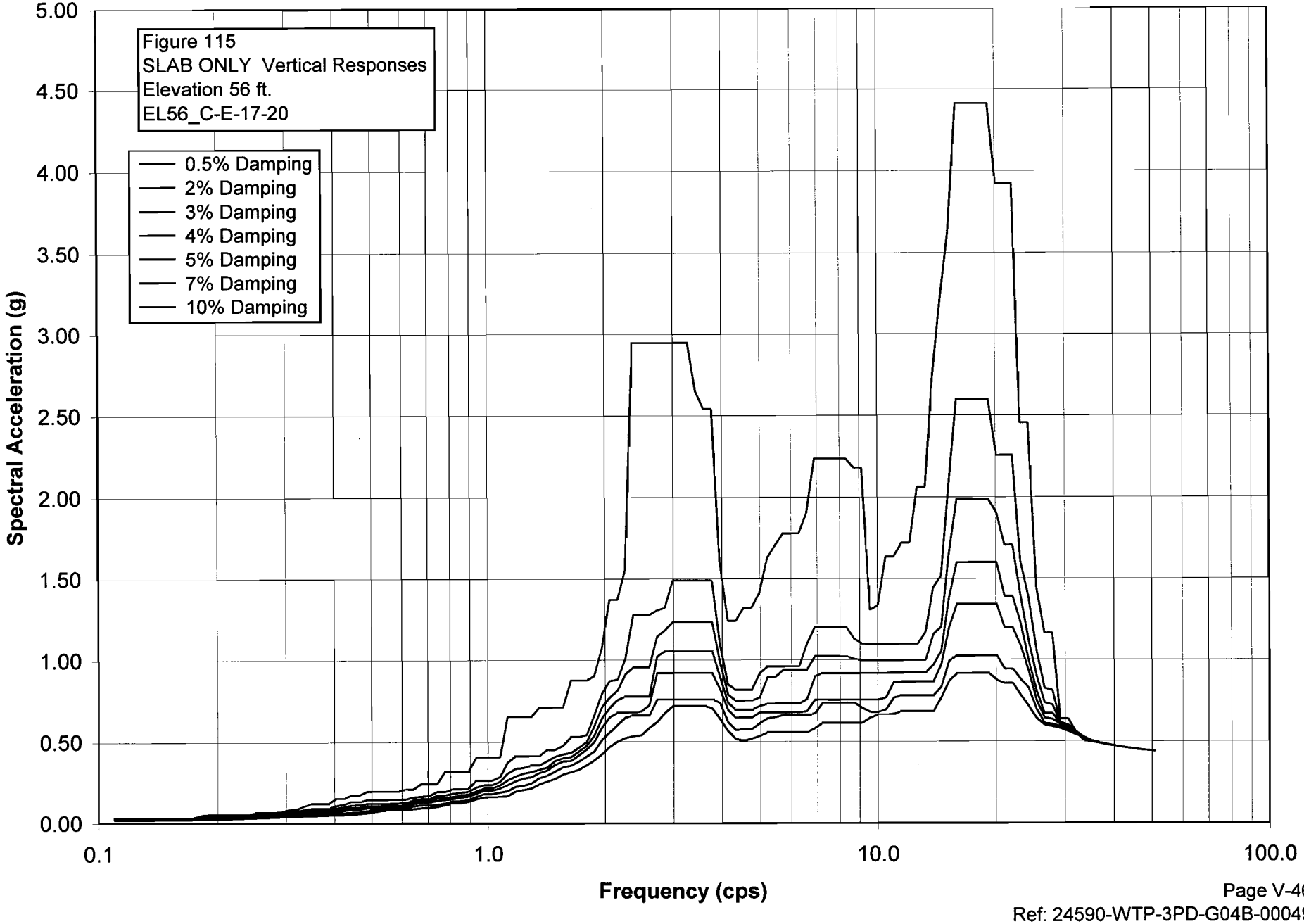

S_PTWW115.grf
RPP-WTP Pretreatment Facility ISRS
Calc No.: 24590-PTF-S0C-S15T-00005, Rev. 0B
Frequency (cps)
Spectral Acceleration (g)
Figure 115
SLAB ONLY Vertical Responses
Elevation 56 ft.
EL56_C-E-17-20

Damping	0.50%	Damping	2%	Damping	3%	Damping	4%	Damping	5%	Damping	7%	Damping	10%
Freq.	Accel.	Freq.	Accel.	Freq.	Accel.	Freq.	Accel.	Freq.	Accel.	Freq.	Accel.	Freq.	Accel.
0.1098	0.0329	0.1098	0.0295	0.1098	0.0275	0.1098	0.0264	0.1098	0.0255	0.1098	0.0237	0.1098	0.0217
0.115	0.0347	0.115	0.0311	0.115	0.029	0.115	0.0271	0.115	0.0257	0.115	0.0239	0.115	0.022
0.1204	0.0348	0.1204	0.0312	0.1204	0.0291	0.1204	0.0273	0.1204	0.0257	0.1204	0.0239	0.1204	0.022
0.1262	0.0349	0.1262	0.0312	0.1262	0.0291	0.1262	0.0273	0.1262	0.0257	0.1262	0.0239	0.1262	0.022
0.1322	0.0349	0.1322	0.0312	0.1322	0.0291	0.1322	0.0273	0.1322	0.0257	0.1322	0.0239	0.1322	0.022
0.1385	0.0349	0.1385	0.0312	0.1385	0.0291	0.1385	0.0273	0.1385	0.0259	0.1385	0.0242	0.1385	0.0222
0.1451	0.0349	0.1451	0.0312	0.1451	0.0291	0.1451	0.0273	0.1451	0.0259	0.1451	0.0242	0.1451	0.0222
0.152	0.0349	0.152	0.0312	0.152	0.0291	0.152	0.0273	0.152	0.0263	0.152	0.025	0.152	0.0236
0.1592	0.0349	0.1592	0.0312	0.1592	0.0291	0.1592	0.0283	0.1592	0.0276	0.1592	0.0264	0.1592	0.0248
0.1668	0.0349	0.1668	0.0312	0.1668	0.0298	0.1668	0.029	0.1668	0.0283	0.1668	0.027	0.1668	0.0253
0.1748	0.0423	0.1748	0.0358	0.1748	0.0324	0.1748	0.0296	0.1748	0.0283	0.1748	0.027	0.1748	0.0258
0.1831	0.0535	0.1831	0.0445	0.1831	0.0398	0.1831	0.0358	0.1831	0.0324	0.1831	0.0273	0.1831	0.0261
0.1918	0.0577	0.1918	0.0478	0.1918	0.0424	0.1918	0.038	0.1918	0.0347	0.1918	0.0317	0.1918	0.0285
0.2009	0.0577	0.2009	0.0478	0.2009	0.0424	0.2009	0.0391	0.2009	0.0372	0.2009	0.034	0.2009	0.0301
0.2105	0.0577	0.2105	0.0478	0.2105	0.0424	0.2105	0.0393	0.2105	0.0376	0.2105	0.0347	0.2105	0.0325
0.2205	0.0577	0.2205	0.0478	0.2205	0.0432	0.2205	0.0417	0.2205	0.0402	0.2205	0.0379	0.2205	0.0351
0.231	0.0579	0.231	0.0494	0.231	0.0465	0.231	0.044	0.231	0.0424	0.231	0.0396	0.231	0.036
0.242	0.0625	0.242	0.0555	0.242	0.0514	0.242	0.0476	0.242	0.0443	0.242	0.0396	0.242	0.036
0.2535	0.0713	0.2535	0.0623	0.2535	0.0573	0.2535	0.0531	0.2535	0.0496	0.2535	0.044	0.2535	0.0386
0.2656	0.0713	0.2656	0.0623	0.2656	0.0573	0.2656	0.0531	0.2656	0.0496	0.2656	0.044	0.2656	0.0386
0.2783	0.0713	0.2783	0.0623	0.2783	0.0573	0.2783	0.0531	0.2783	0.0496	0.2783	0.044	0.2783	0.0395
0.2915	0.0743	0.2915	0.0666	0.2915	0.0623	0.2915	0.0586	0.2915	0.0556	0.2915	0.0504	0.2915	0.0443
0.3054	0.0876	0.3054	0.0757	0.3054	0.0694	0.3054	0.0643	0.3054	0.0605	0.3054	0.0541	0.3054	0.0472
0.3199	0.0921	0.3199	0.0797	0.3199	0.0728	0.3199	0.067	0.3199	0.0619	0.3199	0.0541	0.3199	0.0472
0.3352	0.1104	0.3352	0.0888	0.3352	0.0785	0.3352	0.0706	0.3352	0.0644	0.3352	0.0557	0.3352	0.0481
0.3511	0.1253	0.3511	0.0955	0.3511	0.0827	0.3511	0.0727	0.3511	0.0669	0.3511	0.0584	0.3511	0.05
0.3678	0.1253	0.3678	0.0955	0.3678	0.085	0.3678	0.0776	0.3678	0.0713	0.3678	0.0613	0.3678	0.051

0.3853	0.1253	0.3853	0.0958	0.3853	0.0881	0.3853	0.081	0.3853	0.0755	0.3853	0.0658	0.3853	0.055
0.4037	0.155	0.4037	0.1125	0.4037	0.0976	0.4037	0.086	0.4037	0.0768	0.4037	0.0658	0.4037	0.055
0.4229	0.155	0.4229	0.1189	0.4229	0.1036	0.4229	0.0914	0.4229	0.0814	0.4229	0.0672	0.4229	0.055
0.4431	0.1769	0.4431	0.1356	0.4431	0.1158	0.4431	0.1003	0.4431	0.0882	0.4431	0.0706	0.4431	0.059
0.4642	0.1769	0.4642	0.1356	0.4642	0.1158	0.4642	0.1003	0.4642	0.0882	0.4642	0.0737	0.4642	0.0628
0.4863	0.1983	0.4863	0.1471	0.4863	0.1254	0.4863	0.1095	0.4863	0.0976	0.4863	0.0812	0.4863	0.0672
0.5094	0.1983	0.5094	0.1471	0.5094	0.1254	0.5094	0.1095	0.5094	0.0976	0.5094	0.0855	0.5094	0.0744
0.5337	0.1983	0.5337	0.1471	0.5337	0.1254	0.5337	0.1112	0.5337	0.1045	0.5337	0.0939	0.5337	0.082
0.5591	0.1983	0.5591	0.1471	0.5591	0.1254	0.5591	0.1112	0.5591	0.1045	0.5591	0.0956	0.5591	0.0843
0.5857	0.1998	0.5857	0.1485	0.5857	0.1267	0.5857	0.1112	0.5857	0.1048	0.5857	0.0957	0.5857	0.0843
0.6136	0.2101	0.6136	0.1485	0.6136	0.1267	0.6136	0.1136	0.6136	0.1052	0.6136	0.0957	0.6136	0.0843
0.6428	0.2101	0.6428	0.1594	0.6428	0.1441	0.6428	0.1316	0.6428	0.1212	0.6428	0.1053	0.6428	0.089
0.6734	0.2434	0.6734	0.1649	0.6734	0.1494	0.6734	0.1384	0.6734	0.1287	0.6734	0.1125	0.6734	0.0946
0.7055	0.2434	0.7055	0.17	0.7055	0.1494	0.7055	0.1384	0.7055	0.1287	0.7055	0.1128	0.7055	0.0953
0.7391	0.2434	0.7391	0.1945	0.7391	0.1728	0.7391	0.1548	0.7391	0.1398	0.7391	0.1172	0.7391	0.1021
0.7743	0.3189	0.7743	0.1945	0.7743	0.173	0.7743	0.1583	0.7743	0.1458	0.7743	0.1255	0.7743	0.1139
0.8111	0.3189	0.8111	0.2109	0.8111	0.1831	0.8111	0.1637	0.8111	0.1515	0.8111	0.1361	0.8111	0.1235
0.8497	0.3189	0.8497	0.2109	0.8497	0.1901	0.8497	0.1736	0.8497	0.1596	0.8497	0.1394	0.8497	0.1267
0.8902	0.3189	0.8902	0.2149	0.8902	0.1954	0.8902	0.1792	0.8902	0.1656	0.8902	0.1442	0.8902	0.1342
0.9326	0.4062	0.9326	0.2639	0.9326	0.2222	0.9326	0.1981	0.9326	0.183	0.9326	0.1653	0.9326	0.1501
0.977	0.4062	0.977	0.2639	0.977	0.2359	0.977	0.2171	0.977	0.2018	0.977	0.1798	0.977	0.1597
1.0235	0.4062	1.0235	0.2639	1.0235	0.2359	1.0235	0.2171	1.0235	0.2018	1.0235	0.1805	1.0235	0.1597
1.0723	0.4062	1.0723	0.2856	1.0723	0.2573	1.0723	0.2344	1.0723	0.2163	1.0723	0.1897	1.0723	0.1641
1.1233	0.6546	1.1233	0.3729	1.1233	0.3062	1.1233	0.2648	1.1233	0.2359	1.1233	0.1983	1.1233	0.1679
1.1768	0.6546	1.1768	0.4139	1.1768	0.3354	1.1768	0.2882	1.1768	0.2598	1.1768	0.2262	1.1768	0.1952
1.2328	0.6546	1.2328	0.4139	1.2328	0.342	1.2328	0.3066	1.2328	0.2769	1.2328	0.2314	1.2328	0.2051
1.2916	0.6546	1.2916	0.4139	1.2916	0.3557	1.2916	0.3169	1.2916	0.2849	1.2916	0.2463	1.2916	0.2148
1.353	0.7114	1.353	0.4139	1.353	0.3557	1.353	0.3288	1.353	0.3096	1.353	0.2772	1.353	0.2397
1.4175	0.7114	1.4175	0.451	1.4175	0.3821	1.4175	0.3434	1.4175	0.3251	1.4175	0.2931	1.4175	0.2567
1.485	0.7114	1.485	0.451	1.485	0.409	1.485	0.3828	1.485	0.3591	1.485	0.3192	1.485	0.2738
1.5557	0.7114	1.5557	0.4768	1.5557	0.4231	1.5557	0.4003	1.5557	0.3802	1.5557	0.3446	1.5557	0.3
1.6298	0.8771	1.6298	0.5303	1.6298	0.433	1.6298	0.407	1.6298	0.3829	1.6298	0.3538	1.6298	0.3149
1.7074	0.8771	1.7074	0.5303	1.7074	0.4631	1.7074	0.4398	1.7074	0.4182	1.7074	0.3794	1.7074	0.3287
1.7887	0.8771	1.7887	0.5415	1.7887	0.5002	1.7887	0.4765	1.7887	0.4537	1.7887	0.4108	1.7887	0.3573
1.8738	0.9037	1.8738	0.663	1.8738	0.5967	1.8738	0.5392	1.8738	0.4998	1.8738	0.4412	1.8738	0.3872
1.963	1.0756	1.963	0.7961	1.963	0.7133	1.963	0.6453	1.963	0.589	1.963	0.5131	1.963	0.4247
2.0565	1.3711	2.0565	0.8733	2.0565	0.772	2.0565	0.7084	2.0565	0.6513	2.0565	0.5578	2.0565	0.4693
2.1544	1.3711	2.1544	0.8811	2.1544	0.8161	2.1544	0.7568	2.1544	0.6775	2.1544	0.6051	2.1544	0.503
2.257	1.5546	2.257	1.0086	2.257	0.9138	2.257	0.7768	2.257	0.6775	2.257	0.6481	2.257	0.524

2.3645	2.9466	2.3645	1.2778	2.3645	0.9571	2.3645	0.7768	2.3645	0.6775	2.3645	0.6607	2.3645	0.5351
2.4771	2.9466	2.4771	1.2778	2.4771	0.9571	2.4771	0.7768	2.4771	0.6869	2.4771	0.6607	2.4771	0.5397
2.595	2.9466	2.595	1.2778	2.595	0.9571	2.595	0.7792	2.595	0.7236	2.595	0.6607	2.595	0.5851
2.7186	2.9466	2.7186	1.3059	2.7186	1.1457	2.7186	1.0217	2.7186	0.9201	2.7186	0.7599	2.7186	0.6218
2.848	2.9466	2.848	1.323	2.848	1.1833	2.848	1.0545	2.848	0.9207	2.848	0.7599	2.848	0.6777
2.9836	2.9466	2.9836	1.489	2.9836	1.2361	2.9836	1.0545	2.9836	0.9207	2.9836	0.7599	2.9836	0.7194
3.1257	2.9466	3.1257	1.489	3.1257	1.2361	3.1257	1.0545	3.1257	0.9207	3.1257	0.7599	3.1257	0.7194
3.2745	2.9466	3.2745	1.489	3.2745	1.2361	3.2745	1.0545	3.2745	0.9207	3.2745	0.7599	3.2745	0.7194
3.4305	2.6509	3.4305	1.489	3.4305	1.2361	3.4305	1.0545	3.4305	0.9207	3.4305	0.7599	3.4305	0.7194
3.5938	2.5408	3.5938	1.489	3.5938	1.2361	3.5938	1.0545	3.5938	0.9207	3.5938	0.7599	3.5938	0.7194
3.7649	2.5408	3.7649	1.489	3.7649	1.2361	3.7649	1.0545	3.7649	0.9207	3.7649	0.7599	3.7649	0.704
3.9442	1.6105	3.9442	1.0958	3.9442	0.9858	3.9442	0.8969	3.9442	0.8216	3.9442	0.7368	3.9442	0.6389
4.132	1.2409	4.132	0.8499	4.132	0.7883	4.132	0.7373	4.132	0.6921	4.132	0.6195	4.132	0.5637
4.3288	1.2409	4.3288	0.8174	4.3288	0.7508	4.3288	0.6953	4.3288	0.6474	4.3288	0.5705	4.3288	0.5162
4.5349	1.322	4.5349	0.8174	4.5349	0.7508	4.5349	0.6953	4.5349	0.6474	4.5349	0.5762	4.5349	0.5063
4.7508	1.322	4.7508	0.8174	4.7508	0.7508	4.7508	0.6953	4.7508	0.6474	4.7508	0.5763	4.7508	0.5172
4.977	1.4164	4.977	0.9195	4.977	0.7709	4.977	0.7175	4.977	0.6786	4.977	0.6141	4.977	0.5348
5.214	1.6309	5.214	0.9611	5.214	0.8966	5.214	0.7317	5.214	0.6786	5.214	0.6427	5.214	0.555
5.4623	1.7077	5.4623	0.9611	5.4623	0.8966	5.4623	0.7317	5.4623	0.6786	5.4623	0.6491	5.4623	0.555
5.7224	1.7802	5.7224	0.9611	5.7224	0.9394	5.7224	0.7317	5.7224	0.6786	5.7224	0.6618	5.7224	0.555
5.9948	1.7802	5.9948	0.9611	5.9948	0.9394	5.9948	0.7317	5.9948	0.6786	5.9948	0.6618	5.9948	0.555
6.2803	1.7802	6.2803	0.9611	6.2803	0.9394	6.2803	0.7317	6.2803	0.6786	6.2803	0.6618	6.2803	0.555
6.5793	1.9049	6.5793	1.0978	6.5793	0.9394	6.5793	0.7588	6.5793	0.6857	6.5793	0.6618	6.5793	0.555
6.8926	2.2369	6.8926	1.2019	6.8926	1.0214	6.8926	0.9	6.8926	0.7551	6.8926	0.6724	6.8926	0.581
7.2208	2.2369	7.2208	1.2019	7.2208	1.0214	7.2208	0.9172	7.2208	0.7551	7.2208	0.7362	7.2208	0.6129
7.5646	2.2369	7.5646	1.2019	7.5646	1.0214	7.5646	0.9172	7.5646	0.7551	7.5646	0.7362	7.5646	0.6129
7.9248	2.2369	7.9248	1.2019	7.9248	1.0214	7.9248	0.9172	7.9248	0.7551	7.9248	0.7362	7.9248	0.6129
8.3022	2.2369	8.3022	1.2019	8.3022	1.0214	8.3022	0.9172	8.3022	0.7551	8.3022	0.7362	8.3022	0.6129
8.6975	2.1808	8.6975	1.1297	8.6975	1.0044	8.6975	0.9172	8.6975	0.7551	8.6975	0.7362	8.6975	0.6129
9.1116	2.1808	9.1116	1.0994	9.1116	0.9961	9.1116	0.9172	9.1116	0.7551	9.1116	0.7046	9.1116	0.6129
9.5455	1.3081	9.5455	1.097	9.5455	0.9961	9.5455	0.9172	9.5455	0.7551	9.5455	0.68	9.5455	0.6459
10	1.3354	10	1.097	10	0.9961	10	0.9172	10	0.7551	10	0.68	10	0.6626
10.4762	1.6346	10.4762	1.097	10.4762	0.9961	10.4762	0.9172	10.4762	0.7686	10.4762	0.6957	10.4762	0.6626
10.975	1.6346	10.975	1.097	10.975	0.9961	10.975	0.9233	10.975	0.863	10.975	0.768	10.975	0.6671
11.4976	1.7214	11.4976	1.097	11.4976	0.9961	11.4976	0.9233	11.4976	0.8666	11.4976	0.7814	11.4976	0.6841
12.045	1.7214	12.045	1.097	12.045	0.9961	12.045	0.9233	12.045	0.8666	12.045	0.7814	12.045	0.6841
12.6186	2.0632	12.6186	1.097	12.6186	0.9961	12.6186	0.9233	12.6186	0.8666	12.6186	0.7814	12.6186	0.6841
13.2194	2.0632	13.2194	1.1707	13.2194	0.9961	13.2194	0.9233	13.2194	0.8666	13.2194	0.7814	13.2194	0.6841
13.8489	2.7414	13.8489	1.4457	13.8489	1.1557	13.8489	0.9683	13.8489	0.8666	13.8489	0.7814	13.8489	0.6841

14.5083	3.2128	14.5083	1.5157	14.5083	1.2027	14.5083	1.053	14.5083	0.9721	14.5083	0.8336	14.5083	0.7686
15.1991	3.6191	15.1991	2.0698	15.1991	1.6478	15.1991	1.3781	15.1991	1.196	15.1991	0.9925	15.1991	0.8703
15.9228	4.4132	15.9228	2.5964	15.9228	1.9869	15.9228	1.6011	15.9228	1.342	15.9228	1.0241	15.9228	0.9156
16.681	4.4132	16.681	2.5964	16.681	1.9869	16.681	1.6011	16.681	1.342	16.681	1.0241	16.681	0.9156
17.4753	4.4132	17.4753	2.5964	17.4753	1.9869	17.4753	1.6011	17.4753	1.342	17.4753	1.0241	17.4753	0.9156
18.3074	4.4132	18.3074	2.5964	18.3074	1.9869	18.3074	1.6011	18.3074	1.342	18.3074	1.0241	18.3074	0.9156
19.1791	4.4132	19.1791	2.5964	19.1791	1.9869	19.1791	1.6011	19.1791	1.342	19.1791	1.0241	19.1791	0.9156
20.0923	3.9224	20.0923	2.2551	20.0923	1.905	20.0923	1.6011	20.0923	1.342	20.0923	1.0241	20.0923	0.8746
21.049	3.9224	21.049	2.2551	21.049	1.7069	21.049	1.3911	21.049	1.196	21.049	0.9421	21.049	0.8556
22.0513	3.9224	22.0513	2.2551	22.0513	1.7069	22.0513	1.3911	22.0513	1.196	22.0513	0.9421	22.0513	0.8556
23.1013	2.4554	23.1013	1.6083	23.1013	1.3984	23.1013	1.2275	23.1013	1.0867	23.1013	0.8799	23.1013	0.7832
24.2013	2.4554	24.2013	1.3868	24.2013	1.1176	24.2013	0.9951	24.2013	0.9307	24.2013	0.826	24.2013	0.7129
25.3536	1.443	25.3536	1.0506	25.3536	0.8967	25.3536	0.8057	25.3536	0.7474	25.3536	0.6926	25.3536	0.6385
26.5609	1.1643	26.5609	0.8247	26.5609	0.7362	26.5609	0.6696	26.5609	0.6425	26.5609	0.6098	26.5609	0.5997
27.8256	1.1643	27.8256	0.8126	27.8256	0.7222	27.8256	0.6696	27.8256	0.6345	27.8256	0.6043	27.8256	0.5905
29.1505	0.6352	29.1505	0.6165	29.1505	0.6144	29.1505	0.6094	29.1505	0.6035	29.1505	0.5919	29.1505	0.5777
30.5386	0.6352	30.5386	0.5981	30.5386	0.5888	30.5386	0.5826	30.5386	0.5777	30.5386	0.5696	30.5386	0.5593
31.9927	0.5514	31.9927	0.556	31.9927	0.5544	31.9927	0.5521	31.9927	0.5498	31.9927	0.5454	31.9927	0.539
33.516	0.5022	33.516	0.5192	33.516	0.5227	33.516	0.5236	33.516	0.5235	33.516	0.5222	33.516	0.5194
35.1119	0.4958	35.1119	0.4981	35.1119	0.4996	35.1119	0.5007	35.1119	0.5016	35.1119	0.5026	35.1119	0.5024
36.7838	0.4859	36.7838	0.4867	36.7838	0.4873	36.7838	0.4878	36.7838	0.4882	36.7838	0.4888	36.7838	0.4891
38.5353	0.4766	38.5353	0.4771	38.5353	0.4774	38.5353	0.4777	38.5353	0.4779	38.5353	0.4783	38.5353	0.4785
40.3702	0.4685	40.3702	0.4688	40.3702	0.469	40.3702	0.4691	40.3702	0.4693	40.3702	0.4695	40.3702	0.4697
42.2924	0.4613	42.2924	0.4615	42.2924	0.4616	42.2924	0.4617	42.2924	0.4618	42.2924	0.462	42.2924	0.4622
44.3062	0.4548	44.3062	0.455	44.3062	0.455	44.3062	0.4551	44.3062	0.4552	44.3062	0.4554	44.3062	0.4555
46.4159	0.449	46.4159	0.4491	46.4159	0.4491	46.4159	0.4492	46.4159	0.4493	46.4159	0.4494	46.4159	0.4496
48.626	0.4436	48.626	0.4437	48.626	0.4437	48.626	0.4438	48.626	0.4438	48.626	0.4439	48.626	0.4442
50.9414	0.4386	50.9414	0.4386	50.9414	0.4386	50.9414	0.4387	50.9414	0.4387	50.9414	0.4388	50.9414	0.4391

RPP-WTP Pretreatment Facility ISRS
Calc No.: 24590-PTF-S0C-S15T-00005, Rev. 0B

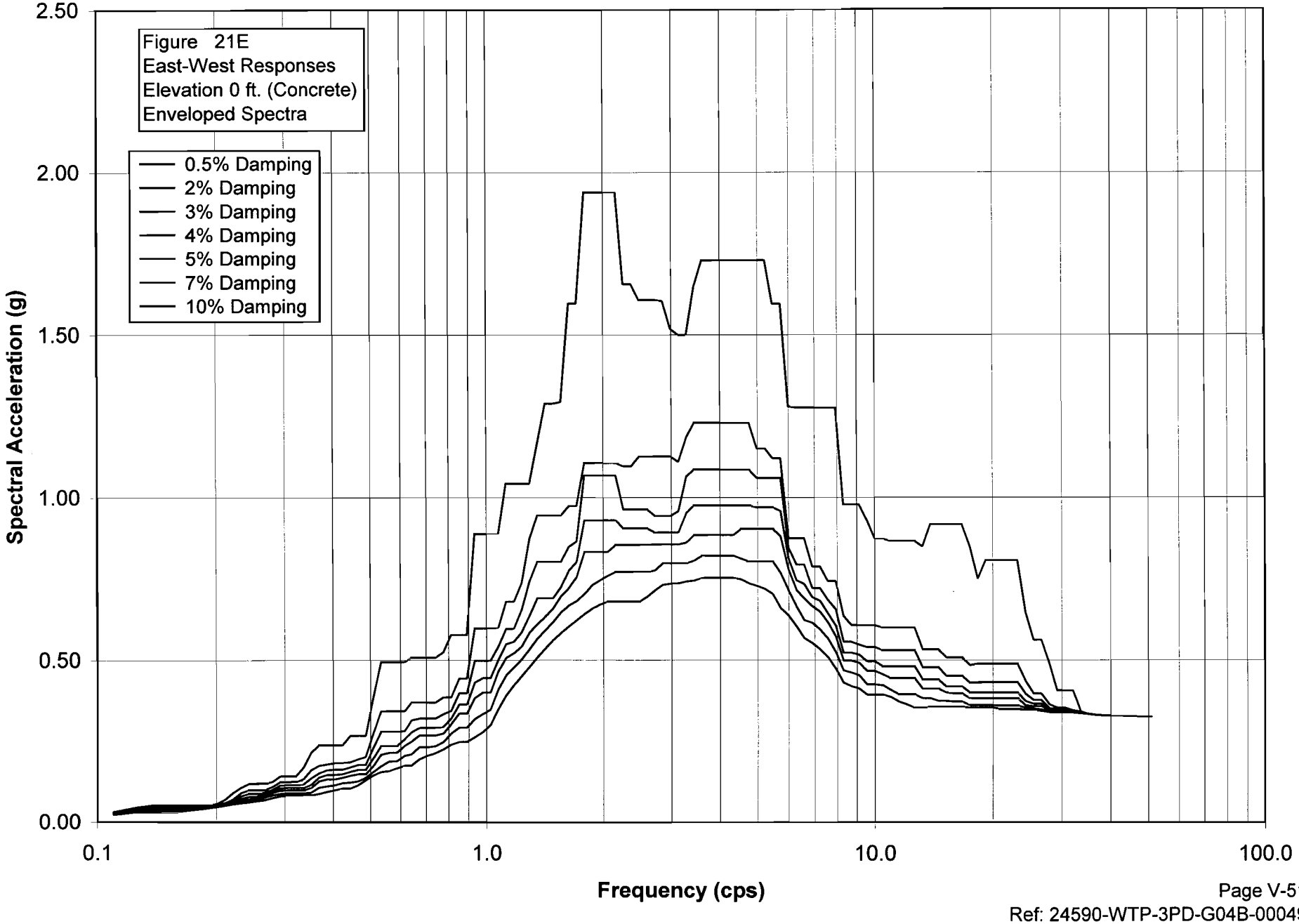

S_PTEE021.grf
RPP-WTP Pretreatment Facility ISRS
Calc No.: 24590-PTF-S0C-S15T-00005, Rev. 0B
Frequency (cps)
Spectral Acceleration (g)
Figure 21E
East-West Responses
Elevation 0 ft. (Concrete)
Enveloped Spectra

Damping	0.50%	Damping	2%	Damping	3%	Damping	4%	Damping	5%	Damping	7%	Damping	10%
Freq.	Accel.	Freq.	Accel.	Freq.	Accel.	Freq.	Accel.	Freq.	Accel.	Freq.	Accel.	Freq.	Accel.
0.1098	0.0314	0.1098	0.0288	0.1098	0.0275	0.1098	0.0267	0.1098	0.026	0.1098	0.0247	0.1098	0.0231
0.115	0.0358	0.115	0.033	0.115	0.0314	0.115	0.03	0.115	0.0289	0.115	0.0274	0.115	0.0254
0.1204	0.041	0.1204	0.0382	0.1204	0.0366	0.1204	0.0352	0.1204	0.0339	0.1204	0.0316	0.1204	0.0287
0.1262	0.0459	0.1262	0.0426	0.1262	0.0407	0.1262	0.0389	0.1262	0.0373	0.1262	0.0344	0.1262	0.0311
0.1322	0.0488	0.1322	0.0442	0.1322	0.0421	0.1322	0.0402	0.1322	0.0385	0.1322	0.0355	0.1322	0.032
0.1385	0.0518	0.1385	0.0463	0.1385	0.0431	0.1385	0.0402	0.1385	0.0385	0.1385	0.0355	0.1385	0.032
0.1451	0.0518	0.1451	0.0463	0.1451	0.0431	0.1451	0.0402	0.1451	0.0385	0.1451	0.0355	0.1451	0.032
0.152	0.0518	0.152	0.0463	0.152	0.0431	0.152	0.0402	0.152	0.0385	0.152	0.0355	0.152	0.032
0.1592	0.0518	0.1592	0.0463	0.1592	0.0431	0.1592	0.0402	0.1592	0.0385	0.1592	0.0355	0.1592	0.0322
0.1668	0.0518	0.1668	0.0463	0.1668	0.0431	0.1668	0.0402	0.1668	0.0385	0.1668	0.0361	0.1668	0.0348
0.1748	0.0518	0.1748	0.0463	0.1748	0.0431	0.1748	0.041	0.1748	0.0403	0.1748	0.0392	0.1748	0.0375
0.1831	0.0518	0.1831	0.0463	0.1831	0.0454	0.1831	0.0446	0.1831	0.0438	0.1831	0.0424	0.1831	0.0402
0.1918	0.0521	0.1918	0.0504	0.1918	0.0494	0.1918	0.0484	0.1918	0.0474	0.1918	0.0455	0.1918	0.0434
0.2009	0.0569	0.2009	0.0549	0.2009	0.0536	0.2009	0.0524	0.2009	0.0513	0.2009	0.0494	0.2009	0.0471
0.2105	0.0707	0.2105	0.06	0.2105	0.0585	0.2105	0.0572	0.2105	0.056	0.2105	0.0538	0.2105	0.0513
0.2205	0.0909	0.2205	0.0714	0.2205	0.0642	0.2205	0.0623	0.2205	0.0608	0.2205	0.0584	0.2205	0.0554
0.231	0.1078	0.231	0.0906	0.231	0.0813	0.231	0.0735	0.231	0.0671	0.231	0.0628	0.231	0.0589
0.242	0.1194	0.242	0.0991	0.242	0.0883	0.242	0.0792	0.242	0.0715	0.242	0.0663	0.242	0.0617
0.2535	0.12	0.2535	0.0991	0.2535	0.0883	0.2535	0.0796	0.2535	0.0755	0.2535	0.069	0.2535	0.0654
0.2656	0.12	0.2656	0.0991	0.2656	0.0922	0.2656	0.0879	0.2656	0.084	0.2656	0.077	0.2656	0.0686
0.2783	0.1252	0.2783	0.1094	0.2783	0.1006	0.2783	0.095	0.2783	0.0907	0.2783	0.0832	0.2783	0.0751
0.2915	0.1421	0.2915	0.1244	0.2915	0.1145	0.2915	0.1057	0.2915	0.0979	0.2915	0.0883	0.2915	0.0805
0.3054	0.1421	0.3054	0.1244	0.3054	0.115	0.3054	0.1067	0.3054	0.0994	0.3054	0.0903	0.3054	0.0832
0.3199	0.1421	0.3199	0.1244	0.3199	0.115	0.3199	0.1067	0.3199	0.0994	0.3199	0.0903	0.3199	0.0837
0.3352	0.1707	0.3352	0.1342	0.3352	0.1178	0.3352	0.1067	0.3352	0.0994	0.3352	0.0903	0.3352	0.0837
0.3511	0.2169	0.3511	0.1627	0.3511	0.1366	0.3511	0.1165	0.3511	0.107	0.3511	0.0923	0.3511	0.0837
0.3678	0.2396	0.3678	0.1754	0.3678	0.1523	0.3678	0.1388	0.3678	0.1269	0.3678	0.1074	0.3678	0.0882

0.3853	0.2396	0.3853	0.1799	0.3853	0.1618	0.3853	0.1463	0.3853	0.1331	0.3853	0.112	0.3853	0.0944
0.4037	0.2396	0.4037	0.1842	0.4037	0.164	0.4037	0.1472	0.4037	0.1332	0.4037	0.1155	0.4037	0.0992
0.4229	0.2396	0.4229	0.1842	0.4229	0.164	0.4229	0.1495	0.4229	0.1381	0.4229	0.1214	0.4229	0.1046
0.4431	0.2688	0.4431	0.1868	0.4431	0.1709	0.4431	0.1568	0.4431	0.1442	0.4431	0.1234	0.4431	0.1046
0.4642	0.2688	0.4642	0.1954	0.4642	0.1781	0.4642	0.1629	0.4642	0.1495	0.4642	0.1272	0.4642	0.1151
0.4863	0.2688	0.4863	0.2037	0.4863	0.1784	0.4863	0.1629	0.4863	0.1495	0.4863	0.1378	0.4863	0.1308
0.5094	0.3911	0.5094	0.2791	0.5094	0.2331	0.5094	0.2001	0.5094	0.1754	0.5094	0.1572	0.5094	0.1456
0.5337	0.4951	0.5337	0.3445	0.5337	0.2811	0.5337	0.237	0.5337	0.2102	0.5337	0.174	0.5337	0.1562
0.5591	0.4951	0.5591	0.3445	0.5591	0.2811	0.5591	0.237	0.5591	0.2161	0.5591	0.1886	0.5591	0.1586
0.5857	0.4951	0.5857	0.3445	0.5857	0.2811	0.5857	0.237	0.5857	0.2161	0.5857	0.1886	0.5857	0.1672
0.6136	0.4951	0.6136	0.3445	0.6136	0.2835	0.6136	0.2579	0.6136	0.2376	0.6136	0.2068	0.6136	0.1755
0.6428	0.5081	0.6428	0.3704	0.6428	0.3158	0.6428	0.2788	0.6428	0.2506	0.6428	0.2109	0.6428	0.1755
0.6734	0.5081	0.6734	0.3704	0.6734	0.3214	0.6734	0.2929	0.6734	0.2694	0.6734	0.2332	0.6734	0.1958
0.7055	0.5081	0.7055	0.3704	0.7055	0.3214	0.7055	0.2929	0.7055	0.2694	0.7055	0.2332	0.7055	0.2068
0.7391	0.5081	0.7391	0.3704	0.7391	0.3214	0.7391	0.2929	0.7391	0.2694	0.7391	0.2359	0.7391	0.2145
0.7743	0.5246	0.7743	0.3867	0.7743	0.3352	0.7743	0.2967	0.7743	0.2757	0.7743	0.2494	0.7743	0.2264
0.8111	0.5776	0.8111	0.3867	0.8111	0.3456	0.8111	0.3215	0.8111	0.3045	0.8111	0.2755	0.8111	0.2408
0.8497	0.5776	0.8497	0.444	0.8497	0.3988	0.8497	0.3642	0.8497	0.3363	0.8497	0.2936	0.8497	0.2491
0.8902	0.5776	0.8902	0.444	0.8902	0.3988	0.8902	0.3642	0.8902	0.3363	0.8902	0.2936	0.8902	0.2491
0.9326	0.8877	0.9326	0.5975	0.9326	0.4991	0.9326	0.4325	0.9326	0.3845	0.9326	0.3203	0.9326	0.2634
0.977	0.8877	0.977	0.5975	0.977	0.4991	0.977	0.4459	0.977	0.4011	0.977	0.3342	0.977	0.2792
1.0235	0.8877	1.0235	0.5975	1.0235	0.4991	1.0235	0.4459	1.0235	0.4011	1.0235	0.3491	1.0235	0.3012
1.0723	0.8877	1.0723	0.6	1.0723	0.5421	1.0723	0.5019	1.0723	0.4672	1.0723	0.4115	1.0723	0.3515
1.1233	1.0439	1.1233	0.6796	1.1233	0.5961	1.1233	0.5493	1.1233	0.5076	1.1233	0.454	1.1233	0.393
1.1768	1.0439	1.1768	0.6796	1.1768	0.5966	1.1768	0.5564	1.1768	0.5218	1.1768	0.4787	1.1768	0.424
1.2328	1.0439	1.2328	0.7363	1.2328	0.6543	1.2328	0.5857	1.2328	0.5418	1.2328	0.503	1.2328	0.452
1.2916	1.0439	1.2916	0.8733	1.2916	0.7423	1.2916	0.6374	1.2916	0.5853	1.2916	0.5346	1.2916	0.4807
1.353	1.1657	1.353	0.9454	1.353	0.8025	1.353	0.6903	1.353	0.6111	1.353	0.5663	1.353	0.5097
1.4175	1.2899	1.4175	0.9454	1.4175	0.8025	1.4175	0.6903	1.4175	0.6337	1.4175	0.5919	1.4175	0.5357
1.485	1.2899	1.485	0.9454	1.485	0.8025	1.485	0.6903	1.485	0.6584	1.485	0.617	1.485	0.5609
1.5557	1.2945	1.5557	0.9454	1.5557	0.8025	1.5557	0.7243	1.5557	0.696	1.5557	0.6469	1.5557	0.584
1.6298	1.5963	1.6298	0.9746	1.6298	0.8489	1.6298	0.7751	1.6298	0.7218	1.6298	0.6683	1.6298	0.604
1.7074	1.5963	1.7074	0.9746	1.7074	0.8647	1.7074	0.8015	1.7074	0.7551	1.7074	0.6813	1.7074	0.6226
1.7887	1.939	1.7887	1.1073	1.7887	1.0689	1.7887	0.93	1.7887	0.8319	1.7887	0.7035	1.7887	0.6419
1.8738	1.939	1.8738	1.1073	1.8738	1.0689	1.8738	0.93	1.8738	0.8319	1.8738	0.7304	1.8738	0.6589
1.963	1.939	1.963	1.1073	1.963	1.0689	1.963	0.93	1.963	0.8319	1.963	0.7451	1.963	0.671
2.0565	1.939	2.0565	1.1073	2.0565	1.0689	2.0565	0.93	2.0565	0.8319	2.0565	0.7593	2.0565	0.6798
2.1544	1.939	2.1544	1.1073	2.1544	1.0689	2.1544	0.93	2.1544	0.8543	2.1544	0.771	2.1544	0.6798
2.257	1.6562	2.257	1.0974	2.257	0.9634	2.257	0.9048	2.257	0.8543	2.257	0.771	2.257	0.6798

2.3645	1.6562	2.3645	1.0974	2.3645	0.9634	2.3645	0.9048	2.3645	0.8543	2.3645	0.771	2.3645	0.6798
2.4771	1.6073	2.4771	1.127	2.4771	0.9634	2.4771	0.9048	2.4771	0.8543	2.4771	0.771	2.4771	0.6798
2.595	1.6073	2.595	1.127	2.595	0.9634	2.595	0.9048	2.595	0.8543	2.595	0.771	2.595	0.6948
2.7186	1.6073	2.7186	1.127	2.7186	0.944	2.7186	0.8929	2.7186	0.8559	2.7186	0.775	2.7186	0.7152
2.848	1.6038	2.848	1.127	2.848	0.944	2.848	0.8929	2.848	0.8559	2.848	0.7972	2.848	0.7309
2.9836	1.5188	2.9836	1.127	2.9836	0.944	2.9836	0.8929	2.9836	0.8559	2.9836	0.7972	2.9836	0.7343
3.1257	1.4997	3.1257	1.1106	3.1257	0.9584	3.1257	0.8929	3.1257	0.8559	3.1257	0.7972	3.1257	0.7358
3.2745	1.4997	3.2745	1.1862	3.2745	1.0659	3.2745	0.9529	3.2745	0.8616	3.2745	0.7972	3.2745	0.7415
3.4305	1.6477	3.4305	1.2303	3.4305	1.0871	3.4305	0.9756	3.4305	0.8845	3.4305	0.8056	3.4305	0.7439
3.5938	1.729	3.5938	1.2303	3.5938	1.0871	3.5938	0.9756	3.5938	0.8845	3.5938	0.8201	3.5938	0.7521
3.7649	1.729	3.7649	1.2303	3.7649	1.0871	3.7649	0.9756	3.7649	0.8845	3.7649	0.8201	3.7649	0.7521
3.9442	1.729	3.9442	1.2303	3.9442	1.0871	3.9442	0.9756	3.9442	0.8845	3.9442	0.8201	3.9442	0.7521
4.132	1.729	4.132	1.2303	4.132	1.0871	4.132	0.9756	4.132	0.8845	4.132	0.8201	4.132	0.7521
4.3288	1.729	4.3288	1.2303	4.3288	1.0871	4.3288	0.9756	4.3288	0.8845	4.3288	0.8201	4.3288	0.7521
4.5349	1.729	4.5349	1.2303	4.5349	1.0871	4.5349	0.9756	4.5349	0.9034	4.5349	0.8114	4.5349	0.7477
4.7508	1.729	4.7508	1.2303	4.7508	1.0871	4.7508	0.9756	4.7508	0.9034	4.7508	0.8028	4.7508	0.7348
4.977	1.729	4.977	1.1517	4.977	1.0607	4.977	0.9698	4.977	0.9034	4.977	0.8028	4.977	0.7272
5.214	1.729	5.214	1.1517	5.214	1.0607	5.214	0.9698	5.214	0.9034	5.214	0.8028	5.214	0.7183
5.4623	1.5947	5.4623	1.1214	5.4623	1.0607	5.4623	0.9698	5.4623	0.9034	5.4623	0.8028	5.4623	0.7033
5.7224	1.5947	5.7224	1.1214	5.7224	1.0607	5.7224	0.9582	5.7224	0.8798	5.7224	0.767	5.7224	0.6597
5.9948	1.2803	5.9948	0.8736	5.9948	0.8444	5.9948	0.8127	5.9948	0.7784	5.9948	0.714	5.9948	0.6374
6.2803	1.2768	6.2803	0.8736	6.2803	0.7928	6.2803	0.744	6.2803	0.7149	6.2803	0.6643	6.2803	0.6028
6.5793	1.2768	6.5793	0.8736	6.5793	0.7928	6.5793	0.7329	6.5793	0.6884	6.5793	0.6225	6.5793	0.5669
6.8926	1.2768	6.8926	0.7867	6.8926	0.7205	6.8926	0.6929	6.8926	0.6658	6.8926	0.6141	6.8926	0.5521
7.2208	1.2768	7.2208	0.7867	7.2208	0.7205	7.2208	0.6813	7.2208	0.6481	7.2208	0.5934	7.2208	0.5329
7.5646	1.2768	7.5646	0.7419	7.5646	0.6843	7.5646	0.6433	7.5646	0.6156	7.5646	0.566	7.5646	0.5094
7.9248	1.2768	7.9248	0.7419	7.9248	0.6556	7.9248	0.6053	7.9248	0.5726	7.9248	0.5246	7.9248	0.474
8.3022	0.9787	8.3022	0.6352	8.3022	0.5554	8.3022	0.5224	8.3022	0.4986	8.3022	0.4686	8.3022	0.4312
8.6975	0.9787	8.6975	0.6069	8.6975	0.5554	8.6975	0.5224	8.6975	0.4986	8.6975	0.4615	8.6975	0.4198
9.1116	0.9787	9.1116	0.6069	9.1116	0.5468	9.1116	0.5167	9.1116	0.4921	9.1116	0.4537	9.1116	0.4127
9.5455	0.9302	9.5455	0.6061	9.5455	0.5391	9.5455	0.4962	9.5455	0.4665	9.5455	0.4253	9.5455	0.3942
10	0.8724	10	0.6061	10	0.5391	10	0.4962	10	0.4665	10	0.4253	10	0.3942
10.4762	0.8724	10.4762	0.5988	10.4762	0.5299	10.4762	0.481	10.4762	0.4557	10.4762	0.4227	10.4762	0.3942
10.975	0.8656	10.975	0.5988	10.975	0.5299	10.975	0.481	10.975	0.4447	10.975	0.4087	10.975	0.3874
11.4976	0.8656	11.4976	0.5988	11.4976	0.5299	11.4976	0.481	11.4976	0.4447	11.4976	0.3958	11.4976	0.3726
12.045	0.8656	12.045	0.5988	12.045	0.5299	12.045	0.481	12.045	0.4447	12.045	0.3958	12.045	0.3646
12.6186	0.8656	12.6186	0.5988	12.6186	0.5299	12.6186	0.481	12.6186	0.4447	12.6186	0.3958	12.6186	0.3544
13.2194	0.849	13.2194	0.5326	13.2194	0.4782	13.2194	0.4405	13.2194	0.4121	13.2194	0.3831	13.2194	0.3547
13.8489	0.917	13.8489	0.5326	13.8489	0.4782	13.8489	0.4405	13.8489	0.4121	13.8489	0.3831	13.8489	0.3575

14.5083	0.917	14.5083	0.5326	14.5083	0.4782	14.5083	0.4405	14.5083	0.4121	14.5083	0.3745	14.5083	0.3575
15.1991	0.917	15.1991	0.5078	15.1991	0.4515	15.1991	0.4192	15.1991	0.401	15.1991	0.3745	15.1991	0.3575
15.9228	0.917	15.9228	0.5078	15.9228	0.4515	15.9228	0.4192	15.9228	0.3981	15.9228	0.3729	15.9228	0.3575
16.681	0.917	16.681	0.5078	16.681	0.4515	16.681	0.4192	16.681	0.3981	16.681	0.3729	16.681	0.3575
17.4753	0.849	17.4753	0.4854	17.4753	0.4308	17.4753	0.4015	17.4753	0.3828	17.4753	0.3623	17.4753	0.3546
18.3074	0.7497	18.3074	0.489	18.3074	0.4321	18.3074	0.4015	18.3074	0.3828	18.3074	0.3623	18.3074	0.3546
19.1791	0.8055	19.1791	0.489	19.1791	0.4321	19.1791	0.4015	19.1791	0.3828	19.1791	0.3623	19.1791	0.3546
20.0923	0.8055	20.0923	0.489	20.0923	0.4321	20.0923	0.4015	20.0923	0.3828	20.0923	0.3623	20.0923	0.3546
21.049	0.8055	21.049	0.489	21.049	0.4321	21.049	0.4015	21.049	0.3828	21.049	0.3607	21.049	0.3508
22.0513	0.8055	22.0513	0.489	22.0513	0.4321	22.0513	0.4015	22.0513	0.3828	22.0513	0.3607	22.0513	0.3504
23.1013	0.8055	23.1013	0.489	23.1013	0.4321	23.1013	0.4015	23.1013	0.3828	23.1013	0.3607	23.1013	0.3504
24.2013	0.6472	24.2013	0.4363	24.2013	0.3973	24.2013	0.3743	24.2013	0.3617	24.2013	0.3546	24.2013	0.3479
25.3536	0.5613	25.3536	0.3979	25.3536	0.3777	25.3536	0.3663	25.3536	0.3586	25.3536	0.3522	25.3536	0.3477
26.5609	0.5613	26.5609	0.3979	26.5609	0.3777	26.5609	0.3663	26.5609	0.3586	26.5609	0.3491	26.5609	0.3452
27.8256	0.4901	27.8256	0.3647	27.8256	0.3523	27.8256	0.3488	27.8256	0.3467	27.8256	0.3435	27.8256	0.3406
29.1505	0.4073	29.1505	0.3548	29.1505	0.3516	29.1505	0.3488	29.1505	0.3467	29.1505	0.3435	29.1505	0.3402
30.5386	0.4073	30.5386	0.3548	30.5386	0.3516	30.5386	0.3488	30.5386	0.3467	30.5386	0.3435	30.5386	0.3402
31.9927	0.4073	31.9927	0.3465	31.9927	0.345	31.9927	0.3447	31.9927	0.3438	31.9927	0.3417	31.9927	0.3392
33.516	0.3423	33.516	0.3426	33.516	0.3419	33.516	0.341	33.516	0.3401	33.516	0.3386	33.516	0.3369
35.1119	0.3337	35.1119	0.3344	35.1119	0.3347	35.1119	0.3349	35.1119	0.3349	35.1119	0.3348	35.1119	0.3343
36.7838	0.3313	36.7838	0.3316	36.7838	0.3318	36.7838	0.3319	36.7838	0.332	36.7838	0.3321	36.7838	0.332
38.5353	0.3298	38.5353	0.3299	38.5353	0.33	38.5353	0.3301	38.5353	0.3302	38.5353	0.3303	38.5353	0.3303
40.3702	0.3286	40.3702	0.3287	40.3702	0.3288	40.3702	0.3289	40.3702	0.3289	40.3702	0.329	40.3702	0.3291
42.2924	0.3277	42.2924	0.3278	42.2924	0.3278	42.2924	0.3279	42.2924	0.3279	42.2924	0.328	42.2924	0.328
44.3062	0.327	44.3062	0.327	44.3062	0.3271	44.3062	0.3271	44.3062	0.3271	44.3062	0.3271	44.3062	0.3272
46.4159	0.3263	46.4159	0.3264	46.4159	0.3264	46.4159	0.3264	46.4159	0.3264	46.4159	0.3264	46.4159	0.3265
48.626	0.3257	48.626	0.3257	48.626	0.3257	48.626	0.3257	48.626	0.3258	48.626	0.3258	48.626	0.3258
50.9414	0.3252	50.9414	0.3252	50.9414	0.3252	50.9414	0.3252	50.9414	0.3252	50.9414	0.3252	50.9414	0.3252

RPP-WTP Pretreatment Facility ISRS
Calc No.: 24590-PTF-S0C-S15T-00005, Rev. 0B

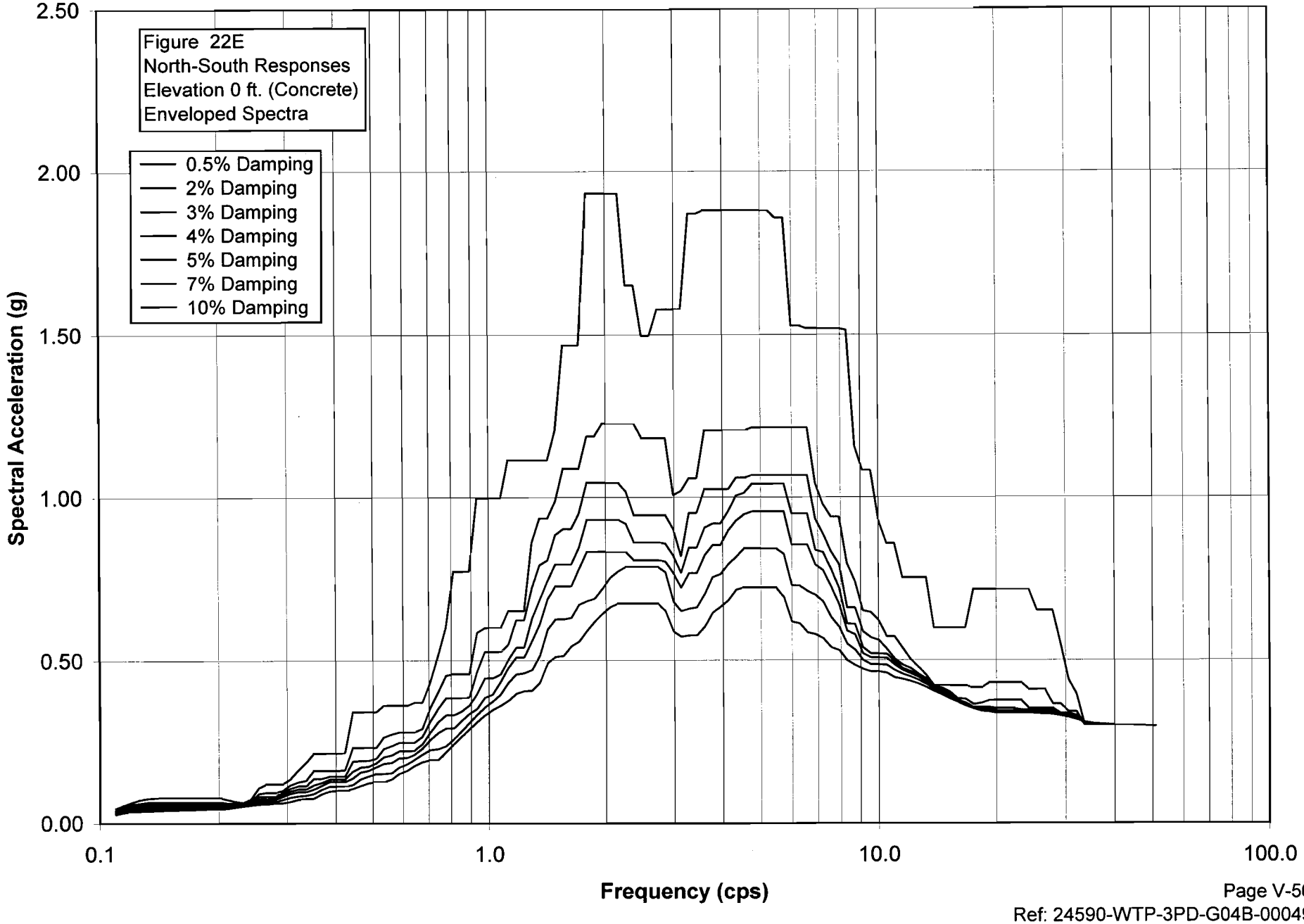

S_PTEE022.grf
RPP-WTP Pretreatment Facility ISRS
Calc No.: 24590-PTF-S0C-S15T-00005, Rev. 0B
Frequency (cps)
Spectral Acceleration (g)
Figure 22E
North-South Responses
Elevation 0 ft. (Concrete)
Enveloped Spectra

Damping	0.50%	Damping	2%	Damping	3%	Damping	4%	Damping	5%	Damping	7%	Damping	10%
Freq.	Accel.	Freq.	Accel.	Freq.	Accel.	Freq.	Accel.	Freq.	Accel.	Freq.	Accel.	Freq.	Accel.
0.1098	0.0456	0.1098	0.0394	0.1098	0.0365	0.1098	0.0343	0.1098	0.0327	0.1098	0.0306	0.1098	0.0281
0.115	0.0555	0.115	0.0492	0.115	0.0464	0.115	0.0438	0.115	0.0417	0.115	0.038	0.115	0.0333
0.1204	0.0647	0.1204	0.058	0.1204	0.0543	0.1204	0.0509	0.1204	0.0479	0.1204	0.0425	0.1204	0.0361
0.1262	0.0719	0.1262	0.0618	0.1262	0.0571	0.1262	0.0533	0.1262	0.0498	0.1262	0.0438	0.1262	0.0378
0.1322	0.0762	0.1322	0.0652	0.1322	0.06	0.1322	0.0561	0.1322	0.0525	0.1322	0.0466	0.1322	0.0398
0.1385	0.0785	0.1385	0.0671	0.1385	0.0608	0.1385	0.0561	0.1385	0.0525	0.1385	0.0466	0.1385	0.0398
0.1451	0.0789	0.1451	0.0676	0.1451	0.0613	0.1451	0.0561	0.1451	0.0525	0.1451	0.0468	0.1451	0.0407
0.152	0.0789	0.152	0.0676	0.152	0.0613	0.152	0.0564	0.152	0.0534	0.152	0.0482	0.152	0.0428
0.1592	0.0789	0.1592	0.0676	0.1592	0.0613	0.1592	0.0564	0.1592	0.0534	0.1592	0.0482	0.1592	0.0438
0.1668	0.0789	0.1668	0.0676	0.1668	0.0613	0.1668	0.0564	0.1668	0.0534	0.1668	0.0482	0.1668	0.0438
0.1748	0.0789	0.1748	0.0676	0.1748	0.0613	0.1748	0.0564	0.1748	0.0534	0.1748	0.0482	0.1748	0.0438
0.1831	0.0789	0.1831	0.0676	0.1831	0.0613	0.1831	0.0564	0.1831	0.0534	0.1831	0.0482	0.1831	0.0438
0.1918	0.0789	0.1918	0.0676	0.1918	0.0613	0.1918	0.0562	0.1918	0.0532	0.1918	0.0482	0.1918	0.0438
0.2009	0.0789	0.2009	0.0676	0.2009	0.0613	0.2009	0.0562	0.2009	0.0532	0.2009	0.0482	0.2009	0.0438
0.2105	0.0735	0.2105	0.0632	0.2105	0.0596	0.2105	0.0562	0.2105	0.0532	0.2105	0.049	0.2105	0.0468
0.2205	0.0683	0.2205	0.0622	0.2205	0.0587	0.2205	0.0559	0.2205	0.0547	0.2205	0.0527	0.2205	0.0501
0.231	0.0647	0.231	0.0623	0.231	0.0609	0.231	0.0595	0.231	0.0583	0.231	0.056	0.231	0.0536
0.242	0.0759	0.242	0.0685	0.242	0.0647	0.242	0.0627	0.242	0.0614	0.242	0.0591	0.242	0.0565
0.2535	0.1097	0.2535	0.0915	0.2535	0.0824	0.2535	0.075	0.2535	0.0693	0.2535	0.0619	0.2535	0.059
0.2656	0.1215	0.2656	0.0949	0.2656	0.0825	0.2656	0.075	0.2656	0.0693	0.2656	0.0641	0.2656	0.0608
0.2783	0.1215	0.2783	0.0949	0.2783	0.0825	0.2783	0.0776	0.2783	0.0734	0.2783	0.0668	0.2783	0.0617
0.2915	0.1215	0.2915	0.1003	0.2915	0.0935	0.2915	0.0874	0.2915	0.0821	0.2915	0.073	0.2915	0.063
0.3054	0.1359	0.3054	0.1179	0.3054	0.1078	0.3054	0.099	0.3054	0.0914	0.3054	0.0795	0.3054	0.0673
0.3199	0.1641	0.3199	0.1267	0.3199	0.1153	0.3199	0.1055	0.3199	0.0971	0.3199	0.0837	0.3199	0.0734
0.3352	0.1864	0.3352	0.1319	0.3352	0.1153	0.3352	0.1055	0.3352	0.0971	0.3352	0.0859	0.3352	0.0764
0.3511	0.2152	0.3511	0.1625	0.3511	0.1375	0.3511	0.1183	0.3511	0.1047	0.3511	0.0907	0.3511	0.0767
0.3678	0.2152	0.3678	0.1625	0.3678	0.1375	0.3678	0.1252	0.3678	0.1165	0.3678	0.1042	0.3678	0.09

0.3853	0.2152	0.3853	0.1625	0.3853	0.1446	0.3853	0.1356	0.3853	0.1276	0.3853	0.1141	0.3853	0.0986
0.4037	0.2152	0.4037	0.1625	0.4037	0.1446	0.4037	0.1356	0.4037	0.1276	0.4037	0.1144	0.4037	0.1004
0.4229	0.2173	0.4229	0.1637	0.4229	0.1446	0.4229	0.1356	0.4229	0.1276	0.4229	0.1144	0.4229	0.1004
0.4431	0.3427	0.4431	0.2324	0.4431	0.1901	0.4431	0.1598	0.4431	0.1385	0.4431	0.119	0.4431	0.1069
0.4642	0.3427	0.4642	0.2324	0.4642	0.1921	0.4642	0.1724	0.4642	0.1573	0.4642	0.1361	0.4642	0.116
0.4863	0.3427	0.4863	0.2324	0.4863	0.1921	0.4863	0.1743	0.4863	0.1618	0.4863	0.1447	0.4863	0.1236
0.5094	0.3427	0.5094	0.2324	0.5094	0.1991	0.5094	0.1846	0.5094	0.1731	0.5094	0.1523	0.5094	0.1276
0.5337	0.3621	0.5337	0.2651	0.5337	0.229	0.5337	0.204	0.5337	0.1835	0.5337	0.1525	0.5337	0.1276
0.5591	0.3621	0.5591	0.2742	0.5591	0.238	0.5591	0.2093	0.5591	0.1863	0.5591	0.1551	0.5591	0.1354
0.5857	0.3621	0.5857	0.2805	0.5857	0.2483	0.5857	0.222	0.5857	0.2005	0.5857	0.1718	0.5857	0.1526
0.6136	0.3621	0.6136	0.2805	0.6136	0.2483	0.6136	0.222	0.6136	0.2017	0.6136	0.1821	0.6136	0.1622
0.6428	0.3715	0.6428	0.2805	0.6428	0.2483	0.6428	0.2235	0.6428	0.2108	0.6428	0.195	0.6428	0.1766
0.6734	0.3715	0.6734	0.2916	0.6734	0.2663	0.6734	0.2436	0.6734	0.2299	0.6734	0.2117	0.6734	0.1883
0.7055	0.4317	0.7055	0.3543	0.7055	0.3133	0.7055	0.279	0.7055	0.2569	0.7055	0.2257	0.7055	0.1944
0.7391	0.5134	0.7391	0.4029	0.7391	0.3524	0.7391	0.3115	0.7391	0.278	0.7391	0.2284	0.7391	0.1944
0.7743	0.6023	0.7743	0.4541	0.7743	0.3853	0.7743	0.3333	0.7743	0.2932	0.7743	0.2375	0.7743	0.2186
0.8111	0.7736	0.8111	0.4591	0.8111	0.3853	0.8111	0.3333	0.8111	0.2932	0.8111	0.2586	0.8111	0.2434
0.8497	0.7736	0.8497	0.4591	0.8497	0.3853	0.8497	0.3451	0.8497	0.3155	0.8497	0.2842	0.8497	0.2671
0.8902	0.7736	0.8902	0.4591	0.8902	0.388	0.8902	0.3627	0.8902	0.3375	0.8902	0.3097	0.8902	0.2901
0.9326	0.9974	0.9326	0.5856	0.9326	0.4664	0.9326	0.3986	0.9326	0.3523	0.9326	0.3345	0.9326	0.3123
0.977	0.9974	0.977	0.6002	0.977	0.5269	0.977	0.4456	0.977	0.3864	0.977	0.3568	0.977	0.3322
1.0235	0.9974	1.0235	0.6002	1.0235	0.5269	1.0235	0.4456	1.0235	0.3963	1.0235	0.375	1.0235	0.3489
1.0723	0.9974	1.0723	0.6002	1.0723	0.5269	1.0723	0.4578	1.0723	0.4362	1.0723	0.3969	1.0723	0.362
1.1233	1.1138	1.1233	0.6522	1.1233	0.5496	1.1233	0.5028	1.1233	0.4775	1.1233	0.432	1.1233	0.3768
1.1768	1.1138	1.1768	0.6522	1.1768	0.6238	1.1768	0.5399	1.1768	0.5091	1.1768	0.4574	1.1768	0.3984
1.2328	1.1138	1.2328	0.6522	1.2328	0.6238	1.2328	0.5399	1.2328	0.5091	1.2328	0.4606	1.2328	0.4063
1.2916	1.1138	1.2916	0.8628	1.2916	0.7232	1.2916	0.6287	1.2916	0.5604	1.2916	0.4712	1.2916	0.4074
1.353	1.1138	1.353	0.9365	1.353	0.794	1.353	0.6869	1.353	0.6112	1.353	0.5144	1.353	0.4326
1.4175	1.1138	1.4175	0.9365	1.4175	0.8087	1.4175	0.7456	1.4175	0.6895	1.4175	0.5953	1.4175	0.4919
1.485	1.2052	1.485	0.988	1.485	0.8866	1.485	0.7958	1.485	0.7285	1.485	0.6264	1.485	0.511
1.5557	1.4673	1.5557	1.0882	1.5557	0.9041	1.5557	0.7958	1.5557	0.7285	1.5557	0.6264	1.5557	0.5133
1.6298	1.4673	1.6298	1.0882	1.6298	0.9041	1.6298	0.7958	1.6298	0.7285	1.6298	0.6315	1.6298	0.5443
1.7074	1.4673	1.7074	1.0882	1.7074	0.9509	1.7074	0.8465	1.7074	0.7818	1.7074	0.6721	1.7074	0.5582
1.7887	1.9337	1.7887	1.1866	1.7887	1.0454	1.7887	0.9314	1.7887	0.8343	1.7887	0.6827	1.7887	0.5914
1.8738	1.9337	1.8738	1.1866	1.8738	1.0454	1.8738	0.9314	1.8738	0.8343	1.8738	0.6909	1.8738	0.6195
1.963	1.9337	1.963	1.2264	1.963	1.0454	1.963	0.9314	1.963	0.8343	1.963	0.7213	1.963	0.6444
2.0565	1.9337	2.0565	1.2264	2.0565	1.0454	2.0565	0.9314	2.0565	0.8343	2.0565	0.7554	2.0565	0.6649
2.1544	1.9337	2.1544	1.2264	2.1544	1.0454	2.1544	0.9314	2.1544	0.8343	2.1544	0.7745	2.1544	0.6753
2.257	1.6526	2.257	1.2264	2.257	1.0189	2.257	0.9197	2.257	0.8328	2.257	0.7876	2.257	0.6753

2.3645	1.6526	2.3645	1.2264	2.3645	0.946	2.3645	0.8625	2.3645	0.8087	2.3645	0.7876	2.3645	0.6753
2.4771	1.4968	2.4771	1.1813	2.4771	0.946	2.4771	0.8625	2.4771	0.8087	2.4771	0.7876	2.4771	0.6753
2.595	1.4968	2.595	1.1813	2.595	0.946	2.595	0.8625	2.595	0.8087	2.595	0.7876	2.595	0.6753
2.7186	1.5785	2.7186	1.1813	2.7186	0.946	2.7186	0.8625	2.7186	0.8087	2.7186	0.7876	2.7186	0.6751
2.848	1.5785	2.848	1.1813	2.848	0.946	2.848	0.859	2.848	0.8042	2.848	0.771	2.848	0.6514
2.9836	1.5785	2.9836	1.0072	2.9836	0.9027	2.9836	0.8216	2.9836	0.7681	2.9836	0.6806	2.9836	0.5889
3.1257	1.5785	3.1257	1.0196	3.1257	0.8195	3.1257	0.7692	3.1257	0.7236	3.1257	0.652	3.1257	0.5735
3.2745	1.8712	3.2745	1.0587	3.2745	0.9525	3.2745	0.8466	3.2745	0.7681	3.2745	0.6591	3.2745	0.5771
3.4305	1.8712	3.4305	1.0587	3.4305	0.9525	3.4305	0.8466	3.4305	0.7681	3.4305	0.6638	3.4305	0.5771
3.5938	1.8819	3.5938	1.2042	3.5938	1.0249	3.5938	0.908	3.5938	0.8231	3.5938	0.7044	3.5938	0.6039
3.7649	1.8819	3.7649	1.2042	3.7649	1.0249	3.7649	0.9193	3.7649	0.8542	3.7649	0.7564	3.7649	0.6471
3.9442	1.8819	3.9442	1.2042	3.9442	1.0249	3.9442	0.9193	3.9442	0.8542	3.9442	0.765	3.9442	0.665
4.132	1.8819	4.132	1.2042	4.132	1.0249	4.132	0.9584	4.132	0.8998	4.132	0.7958	4.132	0.6849
4.3288	1.8819	4.3288	1.2042	4.3288	1.0595	4.3288	1.0049	4.3288	0.9286	4.3288	0.8184	4.3288	0.7174
4.5349	1.8819	4.5349	1.2042	4.5349	1.0595	4.5349	1.013	4.5349	0.9482	4.5349	0.8437	4.5349	0.7242
4.7508	1.8819	4.7508	1.2133	4.7508	1.0676	4.7508	1.0414	4.7508	0.9565	4.7508	0.8437	4.7508	0.7242
4.977	1.8819	4.977	1.2133	4.977	1.0676	4.977	1.0414	4.977	0.9565	4.977	0.8437	4.977	0.7242
5.214	1.8819	5.214	1.2133	5.214	1.0676	5.214	1.0414	5.214	0.9565	5.214	0.8437	5.214	0.7242
5.4623	1.8588	5.4623	1.2133	5.4623	1.0676	5.4623	1.0414	5.4623	0.9565	5.4623	0.8437	5.4623	0.7242
5.7224	1.8588	5.7224	1.2133	5.7224	1.0676	5.7224	1.0414	5.7224	0.9565	5.7224	0.8263	5.7224	0.6943
5.9948	1.5279	5.9948	1.2133	5.9948	1.0676	5.9948	0.9501	5.9948	0.856	5.9948	0.731	5.9948	0.6191
6.2803	1.5279	6.2803	1.2133	6.2803	1.0676	6.2803	0.9501	6.2803	0.856	6.2803	0.7293	6.2803	0.6134
6.5793	1.5193	6.5793	1.2133	6.5793	1.0676	6.5793	0.9501	6.5793	0.856	6.5793	0.7136	6.5793	0.5858
6.8926	1.5193	6.8926	1.0422	6.8926	0.9338	6.8926	0.8392	6.8926	0.7938	6.8926	0.7012	6.8926	0.5804
7.2208	1.5193	7.2208	0.9784	7.2208	0.8888	7.2208	0.8319	7.2208	0.7768	7.2208	0.6808	7.2208	0.5679
7.5646	1.5193	7.5646	0.9407	7.5646	0.834	7.5646	0.7806	7.5646	0.727	7.5646	0.6328	7.5646	0.5403
7.9248	1.5193	7.9248	0.9407	7.9248	0.7957	7.9248	0.7221	7.9248	0.672	7.9248	0.6025	7.9248	0.5313
8.3022	1.5143	8.3022	0.7983	8.3022	0.662	8.3022	0.6131	8.3022	0.5906	8.3022	0.5511	8.3022	0.5
8.6975	1.1566	8.6975	0.7425	8.6975	0.662	8.6975	0.6116	8.6975	0.5792	8.6975	0.5323	8.6975	0.4853
9.1116	1.082	9.1116	0.6528	9.1116	0.5886	9.1116	0.5397	9.1116	0.5209	9.1116	0.5008	9.1116	0.4735
9.5455	1.082	9.5455	0.6477	9.5455	0.5702	9.5455	0.5208	9.5455	0.5082	9.5455	0.4873	9.5455	0.4651
10	0.9286	10	0.6224	10	0.5625	10	0.5208	10	0.5082	10	0.4873	10	0.4651
10.4762	0.8591	10.4762	0.5732	10.4762	0.5348	10.4762	0.5193	10.4762	0.5065	10.4762	0.4855	10.4762	0.4609
10.975	0.8591	10.975	0.5732	10.975	0.5049	10.975	0.496	10.975	0.4867	10.975	0.4693	10.975	0.4468
11.4976	0.7544	11.4976	0.5377	11.4976	0.4857	11.4976	0.4755	11.4976	0.4693	11.4976	0.4577	11.4976	0.4423
12.045	0.7544	12.045	0.5026	12.045	0.4753	12.045	0.4651	12.045	0.4586	12.045	0.4489	12.045	0.436
12.6186	0.7544	12.6186	0.4796	12.6186	0.4572	12.6186	0.4527	12.6186	0.4481	12.6186	0.4393	12.6186	0.4274
13.2194	0.7544	13.2194	0.4531	13.2194	0.4433	13.2194	0.4378	13.2194	0.4336	13.2194	0.4263	13.2194	0.4166
13.8489	0.5993	13.8489	0.4219	13.8489	0.4173	13.8489	0.4169	13.8489	0.4158	13.8489	0.412	13.8489	0.4049

14.5083	0.5993	14.5083	0.4219	14.5083	0.4147	14.5083	0.4103	14.5083	0.4068	14.5083	0.4011	14.5083	0.394
15.1991	0.5993	15.1991	0.4219	15.1991	0.4024	15.1991	0.3966	15.1991	0.393	15.1991	0.3882	15.1991	0.3825
15.9228	0.5993	15.9228	0.4213	15.9228	0.3823	15.9228	0.3773	15.9228	0.3774	15.9228	0.3753	15.9228	0.3712
16.681	0.5993	16.681	0.4213	16.681	0.3807	16.681	0.3694	16.681	0.366	16.681	0.3635	16.681	0.3605
17.4753	0.7174	17.4753	0.416	17.4753	0.3644	17.4753	0.3552	17.4753	0.3513	17.4753	0.352	17.4753	0.3511
18.3074	0.7174	18.3074	0.416	18.3074	0.3686	18.3074	0.3552	18.3074	0.35	18.3074	0.3471	18.3074	0.3445
19.1791	0.7174	19.1791	0.4309	19.1791	0.3767	19.1791	0.3552	19.1791	0.35	19.1791	0.3449	19.1791	0.3419
20.0923	0.7174	20.0923	0.4309	20.0923	0.3767	20.0923	0.3517	20.0923	0.3445	20.0923	0.3407	20.0923	0.3381
21.049	0.7174	21.049	0.4309	21.049	0.3767	21.049	0.3517	21.049	0.3445	21.049	0.3407	21.049	0.3371
22.0513	0.7174	22.0513	0.4309	22.0513	0.3767	22.0513	0.3517	22.0513	0.3445	22.0513	0.3407	22.0513	0.3371
23.1013	0.7174	23.1013	0.4309	23.1013	0.3767	23.1013	0.3479	23.1013	0.3445	23.1013	0.3407	23.1013	0.3371
24.2013	0.7174	24.2013	0.4105	24.2013	0.3521	24.2013	0.3479	24.2013	0.3445	24.2013	0.3407	24.2013	0.3371
25.3536	0.6529	25.3536	0.4105	25.3536	0.3521	25.3536	0.3479	25.3536	0.3445	25.3536	0.3396	25.3536	0.3356
26.5609	0.6529	26.5609	0.4105	26.5609	0.3521	26.5609	0.3479	26.5609	0.3445	26.5609	0.3396	26.5609	0.3356
27.8256	0.6529	27.8256	0.3657	27.8256	0.3521	27.8256	0.3479	27.8256	0.3445	27.8256	0.3393	27.8256	0.334
29.1505	0.5526	29.1505	0.3657	29.1505	0.3374	29.1505	0.335	29.1505	0.3348	29.1505	0.3331	29.1505	0.3297
30.5386	0.4393	30.5386	0.3422	30.5386	0.3374	30.5386	0.3349	30.5386	0.3325	30.5386	0.3287	30.5386	0.3247
31.9927	0.3966	31.9927	0.3422	31.9927	0.3313	31.9927	0.326	31.9927	0.323	31.9927	0.3199	31.9927	0.3178
33.516	0.3014	33.516	0.3015	33.516	0.3016	33.516	0.3036	33.516	0.306	33.516	0.3088	33.516	0.3105
35.1119	0.3014	35.1119	0.3015	35.1119	0.3016	35.1119	0.3019	35.1119	0.3025	35.1119	0.3043	35.1119	0.3061
36.7838	0.3014	36.7838	0.3015	36.7838	0.3016	36.7838	0.3019	36.7838	0.3022	36.7838	0.3029	36.7838	0.3039
38.5353	0.3014	38.5353	0.3015	38.5353	0.3016	38.5353	0.3017	38.5353	0.3018	38.5353	0.3021	38.5353	0.3027
40.3702	0.301	40.3702	0.301	40.3702	0.3011	40.3702	0.3011	40.3702	0.3012	40.3702	0.3014	40.3702	0.3016
42.2924	0.3004	42.2924	0.3004	42.2924	0.3004	42.2924	0.3004	42.2924	0.3005	42.2924	0.3006	42.2924	0.3007
44.3062	0.2996	44.3062	0.2997	44.3062	0.2997	44.3062	0.2997	44.3062	0.2997	44.3062	0.2998	44.3062	0.2999
46.4159	0.2989	46.4159	0.2989	46.4159	0.2989	46.4159	0.2989	46.4159	0.2989	46.4159	0.299	46.4159	0.2991
48.626	0.2982	48.626	0.2982	48.626	0.2982	48.626	0.2982	48.626	0.2982	48.626	0.2982	48.626	0.2983
50.9414	0.2975	50.9414	0.2975	50.9414	0.2975	50.9414	0.2975	50.9414	0.2975	50.9414	0.2975	50.9414	0.2975

RPP-WTP Pretreatment Facility ISRS

Calc No.: 24590-PTF-S0C-S15T-00005, Rev. 0B

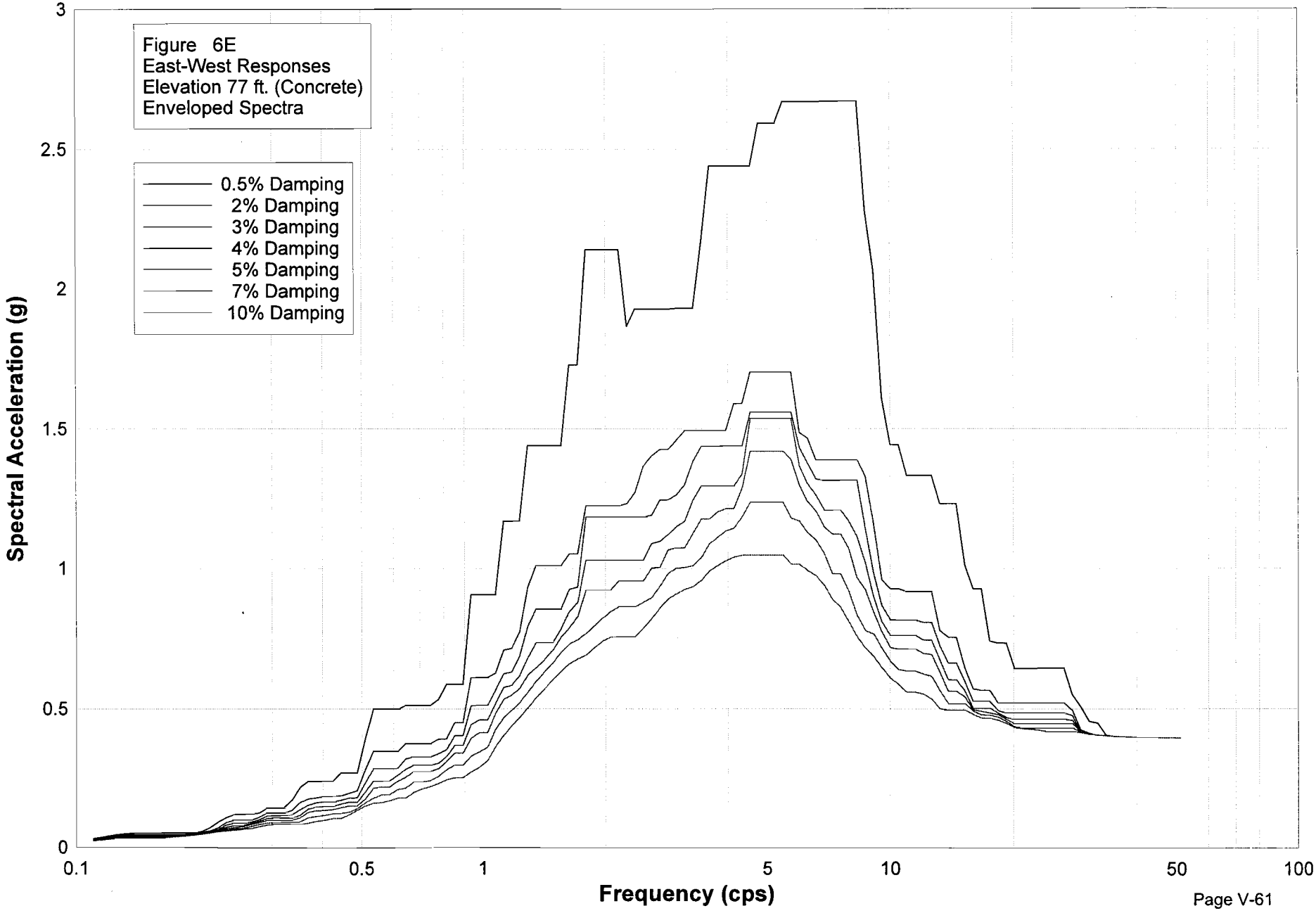

24590-G04B-F00019 Rev 4 (1/17/2006)

Ref: 24590-WTP-3DP-G04B-00049

S_PTEE006.grf
RPP-WTP Pretreatment Facility ISRS
Calc No.: 24590-PTF-S0C-S15T-00005, Rev. 0B
Frequency (cps)
Spectral Acceleration (g)
Figure 6E
East-West Responses
Elevation 77 ft. (Concrete)
Enveloped Spectra

Damping	0.50%	Damping	2%	Damping	3%	Damping	4%	Damping	5%	Damping	7%	Damping	10%
Freq.	Accel.	Freq.	Accel.	Freq.	Accel.	Freq.	Accel.	Freq.	Accel.	Freq.	Accel.	Freq.	Accel.
0.1098	0.0314	0.1098	0.0289	0.1098	0.0276	0.1098	0.0269	0.1098	0.0262	0.1098	0.0249	0.1098	0.0233
0.115	0.0359	0.115	0.0331	0.115	0.0316	0.115	0.0302	0.115	0.0291	0.115	0.0276	0.115	0.0255
0.1204	0.0411	0.1204	0.0383	0.1204	0.0368	0.1204	0.0354	0.1204	0.0341	0.1204	0.0317	0.1204	0.0288
0.1262	0.046	0.1262	0.0427	0.1262	0.0408	0.1262	0.039	0.1262	0.0373	0.1262	0.0344	0.1262	0.0313
0.1322	0.0489	0.1322	0.0443	0.1322	0.0422	0.1322	0.0403	0.1322	0.0386	0.1322	0.0357	0.1322	0.0323
0.1385	0.0518	0.1385	0.0463	0.1385	0.0431	0.1385	0.0403	0.1385	0.0386	0.1385	0.0357	0.1385	0.0323
0.1451	0.0518	0.1451	0.0463	0.1451	0.0431	0.1451	0.0403	0.1451	0.0386	0.1451	0.0357	0.1451	0.0323
0.152	0.0518	0.152	0.0463	0.152	0.0431	0.152	0.0403	0.152	0.0386	0.152	0.0357	0.152	0.0323
0.1592	0.0518	0.1592	0.0463	0.1592	0.0431	0.1592	0.0403	0.1592	0.0386	0.1592	0.0357	0.1592	0.0326
0.1668	0.0519	0.1668	0.0463	0.1668	0.0431	0.1668	0.0403	0.1668	0.0386	0.1668	0.0364	0.1668	0.0354
0.1748	0.0519	0.1748	0.0463	0.1748	0.0431	0.1748	0.041	0.1748	0.0405	0.1748	0.0396	0.1748	0.0381
0.1831	0.0519	0.1831	0.0463	0.1831	0.0455	0.1831	0.0448	0.1831	0.0441	0.1831	0.0428	0.1831	0.0408
0.1918	0.0522	0.1918	0.0506	0.1918	0.0496	0.1918	0.0487	0.1918	0.0478	0.1918	0.046	0.1918	0.0439
0.2009	0.057	0.2009	0.055	0.2009	0.0537	0.2009	0.0526	0.2009	0.0515	0.2009	0.0498	0.2009	0.0476
0.2105	0.0708	0.2105	0.0602	0.2105	0.0587	0.2105	0.0575	0.2105	0.0563	0.2105	0.0542	0.2105	0.052
0.2205	0.091	0.2205	0.0715	0.2205	0.0644	0.2205	0.0626	0.2205	0.0612	0.2205	0.0588	0.2205	0.0562
0.231	0.1081	0.231	0.0909	0.231	0.0815	0.231	0.0736	0.231	0.0676	0.231	0.0634	0.231	0.0598
0.242	0.1197	0.242	0.0994	0.242	0.0885	0.242	0.0794	0.242	0.0717	0.242	0.0669	0.242	0.0625
0.2535	0.1207	0.2535	0.0995	0.2535	0.0885	0.2535	0.0797	0.2535	0.0756	0.2535	0.0698	0.2535	0.0663
0.2656	0.1207	0.2656	0.0995	0.2656	0.0925	0.2656	0.0882	0.2656	0.0843	0.2656	0.0772	0.2656	0.0689
0.2783	0.1257	0.2783	0.1098	0.2783	0.101	0.2783	0.095	0.2783	0.0907	0.2783	0.0838	0.2783	0.0759
0.2915	0.1427	0.2915	0.125	0.2915	0.115	0.2915	0.1062	0.2915	0.0983	0.2915	0.0891	0.2915	0.0818
0.3054	0.1427	0.3054	0.125	0.3054	0.1154	0.3054	0.1071	0.3054	0.0997	0.3054	0.0914	0.3054	0.0848
0.3199	0.1427	0.3199	0.125	0.3199	0.1154	0.3199	0.1071	0.3199	0.0997	0.3199	0.0914	0.3199	0.0852
0.3352	0.1714	0.3352	0.1351	0.3352	0.1191	0.3352	0.1071	0.3352	0.0997	0.3352	0.0914	0.3352	0.0852
0.3511	0.2176	0.3511	0.1633	0.3511	0.1372	0.3511	0.1174	0.3511	0.1084	0.3511	0.0938	0.3511	0.0852
0.3678	0.2403	0.3678	0.176	0.3678	0.1535	0.3678	0.1399	0.3678	0.128	0.3678	0.1083	0.3678	0.0892

0.3853	0.2403	0.3853	0.1806	0.3853	0.1625	0.3853	0.147	0.3853	0.1338	0.3853	0.1128	0.3853	0.0957
0.4037	0.2403	0.4037	0.1859	0.4037	0.1657	0.4037	0.149	0.4037	0.135	0.4037	0.1171	0.4037	0.0998
0.4229	0.2403	0.4229	0.1859	0.4229	0.1657	0.4229	0.1499	0.4229	0.1384	0.4229	0.1225	0.4229	0.1059
0.4431	0.2701	0.4431	0.1875	0.4431	0.1716	0.4431	0.1575	0.4431	0.145	0.4431	0.1247	0.4431	0.1059
0.4642	0.2701	0.4642	0.1968	0.4642	0.1795	0.4642	0.1641	0.4642	0.1507	0.4642	0.1283	0.4642	0.1192
0.4863	0.2701	0.4863	0.2056	0.4863	0.1804	0.4863	0.1641	0.4863	0.1507	0.4863	0.1412	0.4863	0.1353
0.5094	0.3947	0.5094	0.2813	0.5094	0.2346	0.5094	0.2012	0.5094	0.1765	0.5094	0.1614	0.5094	0.1505
0.5337	0.4997	0.5337	0.3481	0.5337	0.2843	0.5337	0.2411	0.5337	0.2145	0.5337	0.1783	0.5337	0.161
0.5591	0.4997	0.5591	0.3481	0.5591	0.2843	0.5591	0.2411	0.5591	0.2181	0.5591	0.1904	0.5591	0.1626
0.5857	0.4997	0.5857	0.3481	0.5857	0.2843	0.5857	0.2411	0.5857	0.2181	0.5857	0.1904	0.5857	0.1691
0.6136	0.4997	0.6136	0.3481	0.6136	0.287	0.6136	0.2611	0.6136	0.2405	0.6136	0.2095	0.6136	0.1783
0.6428	0.5129	0.6428	0.3748	0.6428	0.3198	0.6428	0.2818	0.6428	0.2536	0.6428	0.214	0.6428	0.1783
0.6734	0.5129	0.6734	0.3748	0.6734	0.3264	0.6734	0.2974	0.6734	0.2737	0.6734	0.2372	0.6734	0.1992
0.7055	0.5129	0.7055	0.3748	0.7055	0.3264	0.7055	0.2974	0.7055	0.2737	0.7055	0.2372	0.7055	0.2098
0.7391	0.5129	0.7391	0.3748	0.7391	0.3264	0.7391	0.2974	0.7391	0.2737	0.7391	0.2407	0.7391	0.2193
0.7743	0.5335	0.7743	0.3916	0.7743	0.3391	0.7743	0.3039	0.7743	0.2849	0.7743	0.2555	0.7743	0.2308
0.8111	0.5884	0.8111	0.3927	0.8111	0.3541	0.8111	0.3276	0.8111	0.3099	0.8111	0.2801	0.8111	0.2444
0.8497	0.5884	0.8497	0.4507	0.8497	0.4046	0.8497	0.3692	0.8497	0.3408	0.8497	0.2971	0.8497	0.2516
0.8902	0.5884	0.8902	0.4507	0.8902	0.4046	0.8902	0.3692	0.8902	0.3408	0.8902	0.2971	0.8902	0.2516
0.9326	0.907	0.9326	0.6127	0.9326	0.5121	0.9326	0.4441	0.9326	0.3953	0.9326	0.3297	0.9326	0.2714
0.977	0.907	0.977	0.6127	0.977	0.5136	0.977	0.4604	0.977	0.4144	0.977	0.3455	0.977	0.2883
1.0235	0.907	1.0235	0.6127	1.0235	0.5136	1.0235	0.4604	1.0235	0.4144	1.0235	0.3621	1.0235	0.3137
1.0723	0.907	1.0723	0.6274	1.0723	0.5678	1.0723	0.5191	1.0723	0.4836	1.0723	0.4261	1.0723	0.3634
1.1233	1.168	1.1233	0.7103	1.1233	0.6256	1.1233	0.5775	1.1233	0.5347	1.1233	0.4691	1.1233	0.4056
1.1768	1.168	1.1768	0.7159	1.1768	0.6311	1.1768	0.5847	1.1768	0.5488	1.1768	0.4951	1.1768	0.4381
1.2328	1.168	1.2328	0.7742	1.2328	0.6888	1.2328	0.6188	1.2328	0.5733	1.2328	0.5223	1.2328	0.4691
1.2916	1.4394	1.2916	0.933	1.2916	0.7935	1.2916	0.6819	1.2916	0.6203	1.2916	0.5595	1.2916	0.5037
1.353	1.4394	1.353	1.0107	1.353	0.8561	1.353	0.7366	1.353	0.6465	1.353	0.5986	1.353	0.539
1.4175	1.4394	1.4175	1.0107	1.4175	0.8561	1.4175	0.7366	1.4175	0.676	1.4175	0.6312	1.4175	0.5715
1.485	1.4394	1.485	1.0107	1.485	0.8561	1.485	0.7366	1.485	0.7092	1.485	0.664	1.485	0.6039
1.5557	1.4394	1.5557	1.0107	1.5557	0.8561	1.5557	0.7866	1.5557	0.7557	1.5557	0.7023	1.5557	0.634
1.6298	1.7292	1.6298	1.0521	1.6298	0.9256	1.6298	0.8473	1.6298	0.7898	1.6298	0.7315	1.6298	0.6605
1.7074	1.7292	1.7074	1.0521	1.7074	0.9348	1.7074	0.879	1.7074	0.8295	1.7074	0.746	1.7074	0.6783
1.7887	2.1395	1.7887	1.2235	1.7887	1.1827	1.7887	1.0302	1.7887	0.9224	1.7887	0.7696	1.7887	0.6918
1.8738	2.1395	1.8738	1.2235	1.8738	1.1827	1.8738	1.0302	1.8738	0.9224	1.8738	0.7958	1.8738	0.7181
1.963	2.1395	1.963	1.2235	1.963	1.1827	1.963	1.0302	1.963	0.9224	1.963	0.8233	1.963	0.7412
2.0565	2.1395	2.0565	1.2235	2.0565	1.1827	2.0565	1.0302	2.0565	0.9224	2.0565	0.8464	2.0565	0.7562
2.1544	2.1395	2.1544	1.2235	2.1544	1.1827	2.1544	1.0302	2.1544	0.956	2.1544	0.8634	2.1544	0.7566
2.257	1.8655	2.257	1.2311	2.257	1.1827	2.257	1.0302	2.257	0.956	2.257	0.8634	2.257	0.7566

2.3645	1.9283	2.3645	1.2725	2.3645	1.1827	2.3645	1.0302	2.3645	0.956	2.3645	0.8634	2.3645	0.7574
2.4771	1.9283	2.4771	1.3663	2.4771	1.1827	2.4771	1.0302	2.4771	0.9561	2.4771	0.8798	2.4771	0.7883
2.595	1.9283	2.595	1.4031	2.595	1.1893	2.595	1.0882	2.595	1.002	2.595	0.8969	2.595	0.8218
2.7186	1.9283	2.7186	1.426	2.7186	1.244	2.7186	1.0965	2.7186	1.003	2.7186	0.9367	2.7186	0.8593
2.848	1.9283	2.848	1.426	2.848	1.244	2.848	1.12	2.848	1.0657	2.848	0.9822	2.848	0.8917
2.9836	1.9305	2.9836	1.4595	2.9836	1.2631	2.9836	1.1486	2.9836	1.0724	2.9836	1.0006	2.9836	0.9093
3.1257	1.9305	3.1257	1.4936	3.1257	1.2982	3.1257	1.1662	3.1257	1.0724	3.1257	1.0031	3.1257	0.9247
3.2745	1.9305	3.2745	1.4936	3.2745	1.3839	3.2745	1.2443	3.2745	1.1253	3.2745	1.0094	3.2745	0.9364
3.4305	2.1639	3.4305	1.4936	3.4305	1.438	3.4305	1.2942	3.4305	1.1756	3.4305	1.0379	3.4305	0.9574
3.5938	2.4397	3.5938	1.4936	3.5938	1.438	3.5938	1.2942	3.5938	1.1756	3.5938	1.0872	3.5938	0.9915
3.7649	2.4397	3.7649	1.4936	3.7649	1.438	3.7649	1.2942	3.7649	1.2011	3.7649	1.1103	3.7649	1.01
3.9442	2.4397	3.9442	1.4936	3.9442	1.438	3.9442	1.2942	3.9442	1.2125	3.9442	1.1322	3.9442	1.027
4.132	2.4397	4.132	1.5905	4.132	1.438	4.132	1.2942	4.132	1.2129	4.132	1.1433	4.132	1.0403
4.3288	2.4397	4.3288	1.5905	4.3288	1.438	4.3288	1.3377	4.3288	1.2864	4.3288	1.1828	4.3288	1.0466
4.5349	2.4397	4.5349	1.7034	4.5349	1.5596	4.5349	1.5366	4.5349	1.4195	4.5349	1.2359	4.5349	1.0471
4.7508	2.5935	4.7508	1.7034	4.7508	1.5596	4.7508	1.5369	4.7508	1.4195	4.7508	1.2359	4.7508	1.0471
4.977	2.5935	4.977	1.7034	4.977	1.5596	4.977	1.5369	4.977	1.4195	4.977	1.2359	4.977	1.0471
5.214	2.5935	5.214	1.7034	5.214	1.5596	5.214	1.5369	5.214	1.4195	5.214	1.2359	5.214	1.0471
5.4623	2.6705	5.4623	1.7034	5.4623	1.5596	5.4623	1.5369	5.4623	1.4195	5.4623	1.2359	5.4623	1.0471
5.7224	2.6705	5.7224	1.7034	5.7224	1.5596	5.7224	1.5369	5.7224	1.3894	5.7224	1.1786	5.7224	1.0148
5.9948	2.6705	5.9948	1.4863	5.9948	1.4339	5.9948	1.3671	5.9948	1.298	5.9948	1.1683	5.9948	1.0148
6.2803	2.6705	6.2803	1.4665	6.2803	1.3756	6.2803	1.3021	6.2803	1.2378	6.2803	1.1263	6.2803	0.9924
6.5793	2.6705	6.5793	1.3892	6.5793	1.3198	6.5793	1.2621	6.5793	1.2047	6.5793	1.1014	6.5793	0.9743
6.8926	2.6721	6.8926	1.3892	6.8926	1.3154	6.8926	1.2076	6.8926	1.1475	6.8926	1.0524	6.8926	0.9402
7.2208	2.6721	7.2208	1.3892	7.2208	1.3154	7.2208	1.2076	7.2208	1.1212	7.2208	0.9816	7.2208	0.8881
7.5646	2.6721	7.5646	1.3892	7.5646	1.3154	7.5646	1.2076	7.5646	1.1212	7.5646	0.9805	7.5646	0.8604
7.9248	2.6721	7.9248	1.3892	7.9248	1.3154	7.9248	1.1669	7.9248	1.0689	7.9248	0.9186	7.9248	0.8095
8.3022	2.6721	8.3022	1.3892	8.3022	1.3154	8.3022	1.1119	8.3022	0.965	8.3022	0.8323	8.3022	0.7561
8.6975	2.2773	8.6975	1.329	8.6975	1.1414	8.6975	1.0201	8.6975	0.9238	8.6975	0.7781	8.6975	0.7165
9.1116	2.0653	9.1116	1.1587	9.1116	0.9831	9.1116	0.8993	9.1116	0.8446	9.1116	0.7675	9.1116	0.6862
9.5455	1.6085	9.5455	0.9584	9.5455	0.8663	9.5455	0.8096	9.5455	0.7738	9.5455	0.7154	9.5455	0.6462
10	1.4427	10	0.927	10	0.817	10	0.7614	10	0.7184	10	0.6701	10	0.6104
10.4762	1.4427	10.4762	0.927	10.4762	0.8156	10.4762	0.7614	10.4762	0.7132	10.4762	0.6399	10.4762	0.5871
10.975	1.3323	10.975	0.9176	10.975	0.8156	10.975	0.7614	10.975	0.7132	10.975	0.6348	10.975	0.5606
11.4976	1.3323	11.4976	0.9176	11.4976	0.8156	11.4976	0.7614	11.4976	0.7132	11.4976	0.6348	11.4976	0.5606
12.045	1.3323	12.045	0.9176	12.045	0.8073	12.045	0.7448	12.045	0.6972	12.045	0.6244	12.045	0.5528
12.6186	1.3323	12.6186	0.9176	12.6186	0.8073	12.6186	0.7441	12.6186	0.6935	12.6186	0.6159	12.6186	0.5346
13.2194	1.2305	13.2194	0.7787	13.2194	0.7246	13.2194	0.6739	13.2194	0.6308	13.2194	0.5648	13.2194	0.5011
13.8489	1.2305	13.8489	0.7544	13.8489	0.6632	13.8489	0.604	13.8489	0.5635	13.8489	0.5187	13.8489	0.4957

14.5083	1.2305	14.5083	0.7544	14.5083	0.6629	14.5083	0.6028	14.5083	0.5635	14.5083	0.5187	14.5083	0.4957
15.1991	1.012	15.1991	0.6452	15.1991	0.5972	15.1991	0.5643	15.1991	0.5417	15.1991	0.5187	15.1991	0.4952
15.9228	0.9276	15.9228	0.5712	15.9228	0.5274	15.9228	0.5028	15.9228	0.4971	15.9228	0.492	15.9228	0.4805
16.681	0.9276	16.681	0.5663	16.681	0.5274	16.681	0.5028	16.681	0.4912	16.681	0.4789	16.681	0.4675
17.4753	0.741	17.4753	0.5663	17.4753	0.5274	17.4753	0.5028	17.4753	0.4855	17.4753	0.4775	17.4753	0.4665
18.3074	0.7343	18.3074	0.5209	18.3074	0.4936	18.3074	0.4851	18.3074	0.4791	18.3074	0.4702	18.3074	0.4597
19.1791	0.7343	19.1791	0.5209	19.1791	0.4849	19.1791	0.4691	19.1791	0.4628	19.1791	0.4548	19.1791	0.4475
20.0923	0.6437	20.0923	0.5209	20.0923	0.4849	20.0923	0.4624	20.0923	0.4471	20.0923	0.4361	20.0923	0.433
21.049	0.6437	21.049	0.5209	21.049	0.4849	21.049	0.4624	21.049	0.4471	21.049	0.4307	21.049	0.429
22.0513	0.6443	22.0513	0.5209	22.0513	0.4849	22.0513	0.4624	22.0513	0.4471	22.0513	0.4304	22.0513	0.4267
23.1013	0.6443	23.1013	0.5209	23.1013	0.4849	23.1013	0.4624	23.1013	0.4471	23.1013	0.4311	23.1013	0.424
24.2013	0.6443	24.2013	0.5209	24.2013	0.4849	24.2013	0.4624	24.2013	0.4471	24.2013	0.4311	24.2013	0.4187
25.3536	0.6443	25.3536	0.5209	25.3536	0.4849	25.3536	0.4624	25.3536	0.4471	25.3536	0.4311	25.3536	0.4187
26.5609	0.6443	26.5609	0.5209	26.5609	0.4849	26.5609	0.4624	26.5609	0.4471	26.5609	0.4311	26.5609	0.4187
27.8256	0.55	27.8256	0.495	27.8256	0.4759	27.8256	0.4595	27.8256	0.4471	27.8256	0.4311	27.8256	0.4187
29.1505	0.5074	29.1505	0.4252	29.1505	0.4162	29.1505	0.4191	29.1505	0.4198	29.1505	0.4188	29.1505	0.4152
30.5386	0.4557	30.5386	0.4135	30.5386	0.4124	30.5386	0.412	30.5386	0.4115	30.5386	0.4105	30.5386	0.4099
31.9927	0.4496	31.9927	0.4062	31.9927	0.4055	31.9927	0.4055	31.9927	0.4061	31.9927	0.4066	31.9927	0.4065
33.516	0.407	33.516	0.4062	33.516	0.4055	33.516	0.4051	33.516	0.4048	33.516	0.4045	33.516	0.4043
35.1119	0.4017	35.1119	0.4021	35.1119	0.4022	35.1119	0.4024	35.1119	0.4024	35.1119	0.4025	35.1119	0.4024
36.7838	0.4001	36.7838	0.4003	36.7838	0.4005	36.7838	0.4006	36.7838	0.4007	36.7838	0.4008	36.7838	0.401
38.5353	0.3991	38.5353	0.3993	38.5353	0.3994	38.5353	0.3995	38.5353	0.3995	38.5353	0.3997	38.5353	0.3998
40.3702	0.3984	40.3702	0.3985	40.3702	0.3986	40.3702	0.3987	40.3702	0.3987	40.3702	0.3988	40.3702	0.3989
42.2924	0.3979	42.2924	0.3979	42.2924	0.398	42.2924	0.398	42.2924	0.3981	42.2924	0.3981	42.2924	0.3982
44.3062	0.3974	44.3062	0.3974	44.3062	0.3975	44.3062	0.3975	44.3062	0.3975	44.3062	0.3976	44.3062	0.3976
46.4159	0.397	46.4159	0.397	46.4159	0.397	46.4159	0.397	46.4159	0.397	46.4159	0.3971	46.4159	0.3971
48.626	0.3966	48.626	0.3966	48.626	0.3966	48.626	0.3966	48.626	0.3966	48.626	0.3966	48.626	0.3967
50.9414	0.3962	50.9414	0.3962	50.9414	0.3962	50.9414	0.3962	50.9414	0.3962	50.9414	0.3962	50.9414	0.3963

RPP-WTP Pretreatment Facility ISRS

Calc No.: 24590-PTF-S0C-S15T-00005, Rev. 0B

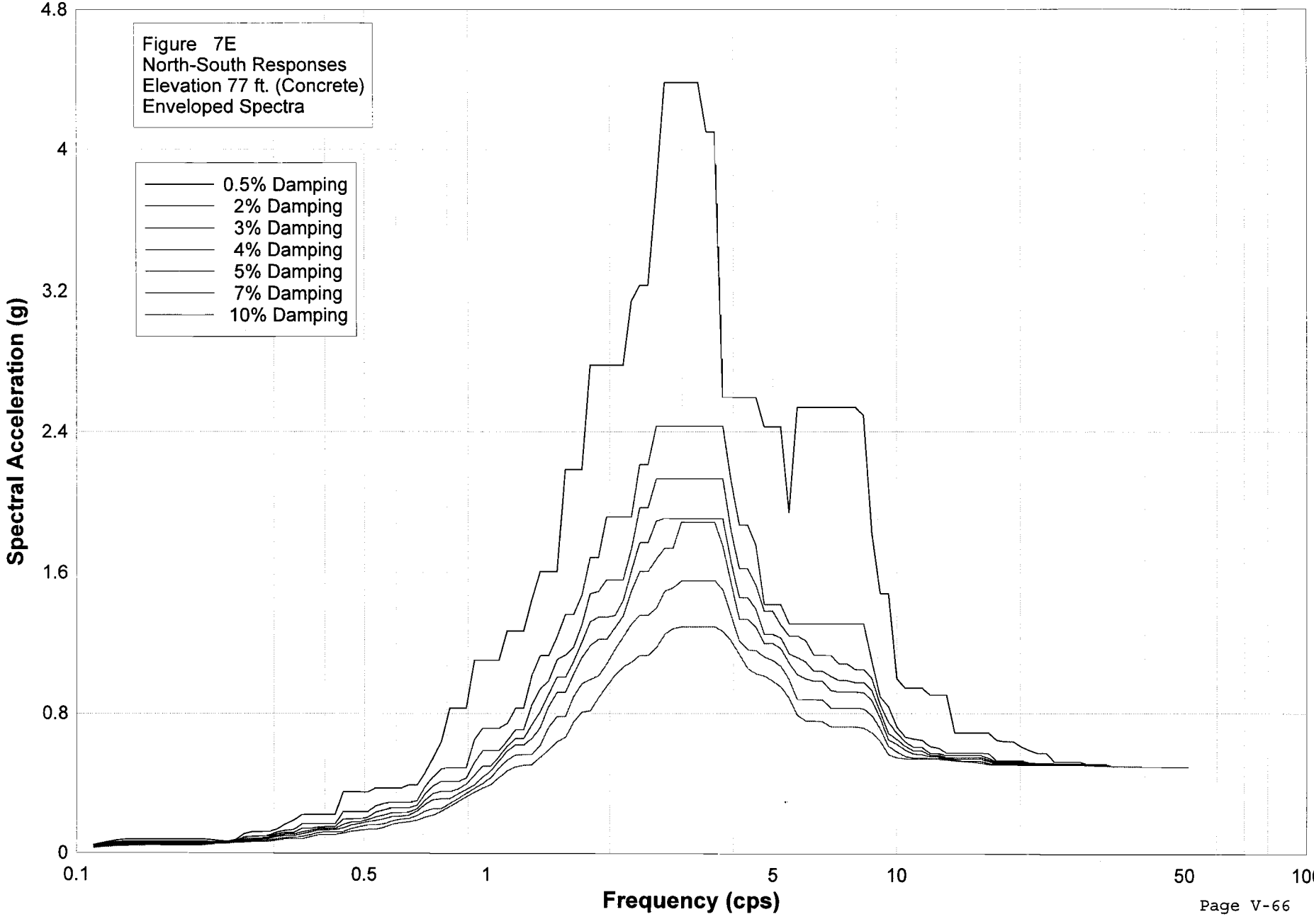

24590-G04B-F00019 Rev 4 (1/17/2006)

Ref: 24590-WTP-3DP-G04B-00049

S_PTEE007.grf
RPP-WTP Pretreatment Facility ISRS
Calc No.: 24590-PTF-S0C-S15T-00005, Rev. 0B
Frequency (cps)
Spectral Acceleration (g)
Figure 7E
North-South Responses
Elevation 77 ft. (Concrete)
Enveloped Spectra

Damping	0.50%	Damping	2%	Damping	3%	Damping	4%	Damping	5%	Damping	7%	Damping	10%
Freq.	Accel.	Freq.	Accel.	Freq.	Accel.	Freq.	Accel.	Freq.	Accel.	Freq.	Accel.	Freq.	Accel.
0.1098	0.0457	0.1098	0.0394	0.1098	0.0366	0.1098	0.0346	0.1098	0.0333	0.1098	0.0314	0.1098	0.029
0.115	0.0556	0.115	0.0495	0.115	0.0468	0.115	0.0445	0.115	0.0424	0.115	0.0387	0.115	0.0341
0.1204	0.065	0.1204	0.0585	0.1204	0.0548	0.1204	0.0514	0.1204	0.0484	0.1204	0.0431	0.1204	0.0368
0.1262	0.072	0.1262	0.0619	0.1262	0.0573	0.1262	0.0534	0.1262	0.0499	0.1262	0.044	0.1262	0.0387
0.1322	0.0763	0.1322	0.0654	0.1322	0.0606	0.1322	0.0566	0.1322	0.0532	0.1322	0.0474	0.1322	0.0408
0.1385	0.0787	0.1385	0.0673	0.1385	0.0609	0.1385	0.0566	0.1385	0.0532	0.1385	0.0474	0.1385	0.0408
0.1451	0.0789	0.1451	0.0676	0.1451	0.0613	0.1451	0.0566	0.1451	0.0532	0.1451	0.0474	0.1451	0.0414
0.152	0.0789	0.152	0.0676	0.152	0.0613	0.152	0.0569	0.152	0.054	0.152	0.049	0.152	0.0438
0.1592	0.0789	0.1592	0.0676	0.1592	0.0613	0.1592	0.0569	0.1592	0.054	0.1592	0.0495	0.1592	0.0446
0.1668	0.0792	0.1668	0.0677	0.1668	0.0613	0.1668	0.0569	0.1668	0.054	0.1668	0.0495	0.1668	0.0446
0.1748	0.0794	0.1748	0.068	0.1748	0.0616	0.1748	0.0569	0.1748	0.054	0.1748	0.0495	0.1748	0.0446
0.1831	0.0794	0.1831	0.068	0.1831	0.0616	0.1831	0.0569	0.1831	0.054	0.1831	0.0495	0.1831	0.0446
0.1918	0.0794	0.1918	0.068	0.1918	0.0616	0.1918	0.0568	0.1918	0.0539	0.1918	0.0495	0.1918	0.0446
0.2009	0.0794	0.2009	0.068	0.2009	0.0616	0.2009	0.0568	0.2009	0.0537	0.2009	0.0487	0.2009	0.0448
0.2105	0.0744	0.2105	0.0638	0.2105	0.0601	0.2105	0.0568	0.2105	0.0537	0.2105	0.0501	0.2105	0.0489
0.2205	0.0694	0.2205	0.0633	0.2205	0.0597	0.2205	0.0567	0.2205	0.0557	0.2205	0.0543	0.2205	0.0527
0.231	0.0656	0.231	0.0633	0.231	0.062	0.231	0.0608	0.231	0.0598	0.231	0.0581	0.231	0.0561
0.242	0.0768	0.242	0.0695	0.242	0.0657	0.242	0.0645	0.242	0.0633	0.242	0.0614	0.242	0.059
0.2535	0.1108	0.2535	0.0924	0.2535	0.0831	0.2535	0.0756	0.2535	0.0697	0.2535	0.064	0.2535	0.0613
0.2656	0.1224	0.2656	0.0958	0.2656	0.0833	0.2656	0.0756	0.2656	0.0697	0.2656	0.066	0.2656	0.0628
0.2783	0.1224	0.2783	0.0958	0.2783	0.0843	0.2783	0.0796	0.2783	0.0755	0.2783	0.0686	0.2783	0.0634
0.2915	0.1224	0.2915	0.1016	0.2915	0.0946	0.2915	0.0884	0.2915	0.0829	0.2915	0.0737	0.2915	0.0659
0.3054	0.1376	0.3054	0.1198	0.3054	0.1099	0.3054	0.1013	0.3054	0.0938	0.3054	0.0818	0.3054	0.0736
0.3199	0.1656	0.3199	0.1295	0.3199	0.118	0.3199	0.1082	0.3199	0.0997	0.3199	0.0864	0.3199	0.0786
0.3352	0.1885	0.3352	0.1345	0.3352	0.118	0.3352	0.1082	0.3352	0.0997	0.3352	0.0888	0.3352	0.0799
0.3511	0.2195	0.3511	0.1658	0.3511	0.1404	0.3511	0.121	0.3511	0.1094	0.3511	0.0947	0.3511	0.0799
0.3678	0.2195	0.3678	0.1658	0.3678	0.1411	0.3678	0.1297	0.3678	0.1197	0.3678	0.1054	0.3678	0.0927

0.3853	0.2195	0.3853	0.1658	0.3853	0.1482	0.3853	0.1392	0.3853	0.1313	0.3853	0.1182	0.3853	0.1037
0.4037	0.2195	0.4037	0.1658	0.4037	0.1497	0.4037	0.141	0.4037	0.1333	0.4037	0.1207	0.4037	0.1067
0.4229	0.2197	0.4229	0.1658	0.4229	0.1497	0.4229	0.141	0.4229	0.1333	0.4229	0.1207	0.4229	0.1067
0.4431	0.3492	0.4431	0.237	0.4431	0.1936	0.4431	0.1625	0.4431	0.1433	0.4431	0.123	0.4431	0.1141
0.4642	0.3492	0.4642	0.237	0.4642	0.1965	0.4642	0.1766	0.4642	0.1607	0.4642	0.14	0.4642	0.1239
0.4863	0.3492	0.4863	0.237	0.4863	0.1965	0.4863	0.1797	0.4863	0.1687	0.4863	0.1514	0.4863	0.1297
0.5094	0.3492	0.5094	0.237	0.5094	0.2038	0.5094	0.1919	0.5094	0.1804	0.5094	0.1599	0.5094	0.1356
0.5337	0.3728	0.5337	0.2709	0.5337	0.2336	0.5337	0.2071	0.5337	0.1861	0.5337	0.1599	0.5337	0.1356
0.5591	0.3728	0.5591	0.2844	0.5591	0.2472	0.5591	0.2178	0.5591	0.1969	0.5591	0.1672	0.5591	0.1469
0.5857	0.3728	0.5857	0.291	0.5857	0.2581	0.5857	0.2314	0.5857	0.2095	0.5857	0.1839	0.5857	0.1647
0.6136	0.3728	0.6136	0.291	0.6136	0.2581	0.6136	0.2314	0.6136	0.211	0.6136	0.1935	0.6136	0.1734
0.6428	0.3892	0.6428	0.291	0.6428	0.2581	0.6428	0.2341	0.6428	0.2164	0.6428	0.198	0.6428	0.1784
0.6734	0.3892	0.6734	0.3002	0.6734	0.2736	0.6734	0.253	0.6734	0.2391	0.6734	0.2147	0.6734	0.1893
0.7055	0.4568	0.7055	0.3773	0.7055	0.3354	0.7055	0.3005	0.7055	0.2769	0.7055	0.2399	0.7055	0.2062
0.7391	0.5468	0.7391	0.437	0.7391	0.3838	0.7391	0.3407	0.7391	0.3056	0.7391	0.2529	0.7391	0.2172
0.7743	0.6403	0.7743	0.4827	0.7743	0.4094	0.7743	0.3537	0.7743	0.3106	0.7743	0.254	0.7743	0.239
0.8111	0.831	0.8111	0.4886	0.8111	0.4094	0.8111	0.3537	0.8111	0.3106	0.8111	0.2831	0.8111	0.2657
0.8497	0.831	0.8497	0.4886	0.8497	0.4094	0.8497	0.3657	0.8497	0.3378	0.8497	0.3109	0.8497	0.2933
0.8902	0.831	0.8902	0.4886	0.8902	0.4288	0.8902	0.3942	0.8902	0.3631	0.8902	0.3404	0.8902	0.3207
0.9326	1.1005	0.9326	0.6506	0.9326	0.519	0.9326	0.4449	0.9326	0.3898	0.9326	0.3703	0.9326	0.3469
0.977	1.1005	0.977	0.7147	0.977	0.5864	0.977	0.4962	0.977	0.4337	0.977	0.3972	0.977	0.3706
1.0235	1.1005	1.0235	0.7147	1.0235	0.5864	1.0235	0.4962	1.0235	0.4691	1.0235	0.4309	1.0235	0.3909
1.0723	1.1005	1.0723	0.7147	1.0723	0.5864	1.0723	0.5524	1.0723	0.5282	1.0723	0.4852	1.0723	0.4308
1.1233	1.2677	1.1233	0.7412	1.1233	0.6432	1.1233	0.6123	1.1233	0.5832	1.1233	0.5321	1.1233	0.4696
1.1768	1.2677	1.1768	0.8293	1.1768	0.7065	1.1768	0.6555	1.1768	0.62	1.1768	0.5613	1.1768	0.4934
1.2328	1.2677	1.2328	0.8293	1.2328	0.7065	1.2328	0.6555	1.2328	0.62	1.2328	0.5639	1.2328	0.5024
1.2916	1.4479	1.2916	1.0168	1.2916	0.8501	1.2916	0.7366	1.2916	0.6556	1.2916	0.5639	1.2916	0.5055
1.353	1.6058	1.353	1.1275	1.353	0.9398	1.353	0.8103	1.353	0.7197	1.353	0.6176	1.353	0.5488
1.4175	1.6058	1.4175	1.1275	1.4175	0.9845	1.4175	0.9078	1.4175	0.8382	1.4175	0.7198	1.4175	0.5908
1.485	1.6058	1.485	1.2335	1.485	1.1052	1.485	1.0054	1.485	0.9202	1.485	0.7812	1.485	0.6369
1.5557	2.1846	1.5557	1.3621	1.5557	1.1315	1.5557	1.0054	1.5557	0.9202	1.5557	0.7812	1.5557	0.6625
1.6298	2.1846	1.6298	1.3621	1.6298	1.1769	1.6298	1.0959	1.6298	1.0225	1.6298	0.8962	1.6298	0.7518
1.7074	2.1846	1.7074	1.4719	1.7074	1.3054	1.7074	1.2055	1.7074	1.1171	1.7074	0.9707	1.7074	0.8071
1.7887	2.7802	1.7887	1.6856	1.7887	1.4812	1.7887	1.3211	1.7887	1.1842	1.7887	0.9918	1.7887	0.8152
1.8738	2.7802	1.8738	1.6856	1.8738	1.4926	1.8738	1.3481	1.8738	1.2212	1.8738	1.0136	1.8738	0.8884
1.963	2.7802	1.963	1.9172	1.963	1.5603	1.963	1.3481	1.963	1.2212	1.963	1.0811	1.963	0.9548
2.0565	2.7802	2.0565	1.9172	2.0565	1.5603	2.0565	1.3571	2.0565	1.2869	2.0565	1.1624	2.0565	1.0171
2.1544	2.7802	2.1544	1.9172	2.1544	1.5603	2.1544	1.4424	2.1544	1.3536	2.1544	1.2355	2.1544	1.0641
2.257	3.1449	2.257	1.9172	2.257	1.7334	2.257	1.6089	2.257	1.4947	2.257	1.309	2.257	1.0916

2.3645	3.2327	2.3645	2.2136	2.3645	1.968	2.3645	1.7697	2.3645	1.6071	2.3645	1.3579	2.3645	1.1296
2.4771	3.2327	2.4771	2.2136	2.4771	1.968	2.4771	1.7697	2.4771	1.6071	2.4771	1.3579	2.4771	1.1301
2.595	3.7738	2.595	2.4327	2.595	2.131	2.595	1.8936	2.595	1.6778	2.595	1.3976	2.595	1.1754
2.7186	4.3838	2.7186	2.4327	2.7186	2.131	2.7186	1.9075	2.7186	1.7384	2.7186	1.4956	2.7186	1.2512
2.848	4.3838	2.848	2.4327	2.848	2.131	2.848	1.9075	2.848	1.7384	2.848	1.5139	2.848	1.2815
2.9836	4.3838	2.9836	2.4327	2.9836	2.131	2.9836	1.9075	2.9836	1.8855	2.9836	1.5536	2.9836	1.2917
3.1257	4.3838	3.1257	2.4327	3.1257	2.131	3.1257	1.9075	3.1257	1.8855	3.1257	1.5536	3.1257	1.2917
3.2745	4.3838	3.2745	2.4327	3.2745	2.131	3.2745	1.9075	3.2745	1.8855	3.2745	1.5536	3.2745	1.2917
3.4305	4.1005	3.4305	2.4327	3.4305	2.131	3.4305	1.9075	3.4305	1.8855	3.4305	1.5536	3.4305	1.2917
3.5938	4.1005	3.5938	2.4327	3.5938	2.131	3.5938	1.9075	3.5938	1.8855	3.5938	1.5536	3.5938	1.2917
3.7649	2.5959	3.7649	2.4327	3.7649	2.131	3.7649	1.9042	3.7649	1.7489	3.7649	1.5021	3.7649	1.265
3.9442	2.5959	3.9442	2.121	3.9442	1.8355	3.9442	1.6598	3.9442	1.5405	3.9442	1.3563	3.9442	1.2103
4.132	2.5959	4.132	1.8694	4.132	1.6226	4.132	1.4573	4.132	1.3351	4.132	1.2096	4.132	1.1326
4.3288	2.5959	4.3288	1.8694	4.3288	1.6226	4.3288	1.4573	4.3288	1.3351	4.3288	1.162	4.3288	1.0536
4.5349	2.5959	4.5349	1.7534	4.5349	1.5274	4.5349	1.3901	4.5349	1.2878	4.5349	1.1559	4.5349	1.0242
4.7508	2.4293	4.7508	1.4177	4.7508	1.3814	4.7508	1.25	4.7508	1.1959	4.7508	1.1203	4.7508	1.0119
4.977	2.4293	4.977	1.4177	4.977	1.3814	4.977	1.25	4.977	1.1959	4.977	1.1002	4.977	0.9832
5.214	2.4293	5.214	1.4177	5.214	1.3011	5.214	1.2293	5.214	1.1678	5.214	1.0665	5.214	0.9502
5.4623	1.9405	5.4623	1.3108	5.4623	1.2385	5.4623	1.1382	5.4623	1.084	5.4623	0.9911	5.4623	0.8858
5.7224	2.5389	5.7224	1.3108	5.7224	1.2385	5.7224	1.1157	5.7224	1.0195	5.7224	0.8782	5.7224	0.7893
5.9948	2.5389	5.9948	1.3108	5.9948	1.2138	5.9948	1.0915	5.9948	0.996	5.9948	0.8782	5.9948	0.7551
6.2803	2.5389	6.2803	1.3108	6.2803	1.1292	6.2803	1.0403	6.2803	0.9828	6.2803	0.8782	6.2803	0.7551
6.5793	2.5389	6.5793	1.3108	6.5793	1.1292	6.5793	1.0403	6.5793	0.9828	6.5793	0.8776	6.5793	0.7522
6.8926	2.5389	6.8926	1.3108	6.8926	1.1292	6.8926	1.0107	6.8926	0.9301	6.8926	0.8305	6.8926	0.7234
7.2208	2.5389	7.2208	1.3108	7.2208	1.0813	7.2208	0.9868	7.2208	0.9225	7.2208	0.8305	7.2208	0.7231
7.5646	2.5389	7.5646	1.3108	7.5646	1.0813	7.5646	0.9868	7.5646	0.9225	7.5646	0.8305	7.5646	0.7231
7.9248	2.5389	7.9248	1.3108	7.9248	1.0494	7.9248	0.9755	7.9248	0.9203	7.9248	0.8305	7.9248	0.7231
8.3022	2.4941	8.3022	1.3108	8.3022	1.0494	8.3022	0.9755	8.3022	0.9182	8.3022	0.8251	8.3022	0.7169
8.6975	1.8253	8.6975	1.0955	8.6975	0.9976	8.6975	0.9284	8.6975	0.8735	8.6975	0.7863	8.6975	0.6887
9.1116	1.4804	9.1116	0.8931	9.1116	0.8487	9.1116	0.8084	9.1116	0.7724	9.1116	0.7118	9.1116	0.6409
9.5455	1.4804	9.5455	0.8385	9.5455	0.7483	9.5455	0.684	9.5455	0.6476	9.5455	0.612	9.5455	0.5642
10	0.9957	10	0.7233	10	0.685	10	0.6511	10	0.6232	10	0.5792	10	0.5466
10.4762	0.9436	10.4762	0.6652	10.4762	0.6378	10.4762	0.6134	10.4762	0.5916	10.4762	0.5543	10.4762	0.5416
10.975	0.9436	10.975	0.6547	10.975	0.6085	10.975	0.5856	10.975	0.5694	10.975	0.5453	10.975	0.5376
11.4976	0.9436	11.4976	0.648	11.4976	0.6085	11.4976	0.5856	11.4976	0.5658	11.4976	0.5453	11.4976	0.5376
12.045	0.9057	12.045	0.6115	12.045	0.5714	12.045	0.561	12.045	0.5542	12.045	0.5453	12.045	0.5376
12.6186	0.9057	12.6186	0.6023	12.6186	0.5714	12.6186	0.561	12.6186	0.5542	12.6186	0.5453	12.6186	0.5376
13.2194	0.9057	13.2194	0.574	13.2194	0.5614	13.2194	0.5505	13.2194	0.5472	13.2194	0.5416	13.2194	0.5356
13.8489	0.6913	13.8489	0.574	13.8489	0.5614	13.8489	0.5504	13.8489	0.5417	13.8489	0.535	13.8489	0.5308

14.5083	0.6913	14.5083	0.574	14.5083	0.5614	14.5083	0.5504	14.5083	0.5417	14.5083	0.5301	14.5083	0.5264
15.1991	0.6913	15.1991	0.574	15.1991	0.5614	15.1991	0.5504	15.1991	0.5417	15.1991	0.5301	15.1991	0.5234
15.9228	0.6913	15.9228	0.574	15.9228	0.5614	15.9228	0.5504	15.9228	0.5417	15.9228	0.5292	15.9228	0.5181
16.681	0.6913	16.681	0.5725	16.681	0.5477	16.681	0.5365	16.681	0.5284	16.681	0.518	16.681	0.5095
17.4753	0.6486	17.4753	0.5314	17.4753	0.5237	17.4753	0.518	17.4753	0.5141	17.4753	0.5087	17.4753	0.5051
18.3074	0.6404	18.3074	0.5314	18.3074	0.5237	18.3074	0.518	18.3074	0.5141	18.3074	0.5087	18.3074	0.5057
19.1791	0.6404	19.1791	0.5314	19.1791	0.5237	19.1791	0.518	19.1791	0.5141	19.1791	0.5087	19.1791	0.5057
20.0923	0.6104	20.0923	0.5314	20.0923	0.5237	20.0923	0.518	20.0923	0.5141	20.0923	0.5087	20.0923	0.5057
21.049	0.5894	21.049	0.5192	21.049	0.515	21.049	0.5122	21.049	0.5106	21.049	0.5081	21.049	0.5057
22.0513	0.5736	22.0513	0.5155	22.0513	0.5137	22.0513	0.5122	22.0513	0.5106	22.0513	0.5081	22.0513	0.5057
23.1013	0.5736	23.1013	0.5131	23.1013	0.5105	23.1013	0.5085	23.1013	0.507	23.1013	0.5056	23.1013	0.5045
24.2013	0.5233	24.2013	0.5131	24.2013	0.5105	24.2013	0.5085	24.2013	0.507	24.2013	0.505	24.2013	0.5034
25.3536	0.5233	25.3536	0.5131	25.3536	0.5105	25.3536	0.5085	25.3536	0.507	25.3536	0.505	25.3536	0.5034
26.5609	0.5233	26.5609	0.5131	26.5609	0.5105	26.5609	0.5085	26.5609	0.507	26.5609	0.505	26.5609	0.5034
27.8256	0.5233	27.8256	0.5131	27.8256	0.5105	27.8256	0.5085	27.8256	0.507	27.8256	0.505	27.8256	0.5031
29.1505	0.5079	29.1505	0.5031	29.1505	0.5033	29.1505	0.5033	29.1505	0.5031	29.1505	0.5026	29.1505	0.5017
30.5386	0.5079	30.5386	0.5022	30.5386	0.5014	30.5386	0.501	30.5386	0.5008	30.5386	0.5005	30.5386	0.5001
31.9927	0.5079	31.9927	0.5022	31.9927	0.5005	31.9927	0.4997	31.9927	0.4994	31.9927	0.4991	31.9927	0.4988
33.516	0.4972	33.516	0.4972	33.516	0.4974	33.516	0.4975	33.516	0.4976	33.516	0.4976	33.516	0.4975
35.1119	0.4965	35.1119	0.4965	35.1119	0.4965	35.1119	0.4965	35.1119	0.4965	35.1119	0.4965	35.1119	0.4965
36.7838	0.4957	36.7838	0.4957	36.7838	0.4957	36.7838	0.4957	36.7838	0.4957	36.7838	0.4958	36.7838	0.4958
38.5353	0.495	38.5353	0.495	38.5353	0.495	38.5353	0.4951	38.5353	0.4951	38.5353	0.4951	38.5353	0.4951
40.3702	0.4944	40.3702	0.4944	40.3702	0.4945	40.3702	0.4945	40.3702	0.4945	40.3702	0.4945	40.3702	0.4945
42.2924	0.4939	42.2924	0.4939	42.2924	0.4939	42.2924	0.4939	42.2924	0.4939	42.2924	0.494	42.2924	0.494
44.3062	0.4934	44.3062	0.4935	44.3062	0.4935	44.3062	0.4935	44.3062	0.4935	44.3062	0.4935	44.3062	0.4935
46.4159	0.493	46.4159	0.4931	46.4159	0.4931	46.4159	0.4931	46.4159	0.4931	46.4159	0.4931	46.4159	0.4931
48.626	0.4927	48.626	0.4927	48.626	0.4927	48.626	0.4927	48.626	0.4927	48.626	0.4927	48.626	0.4927
50.9414	0.4923	50.9414	0.4923	50.9414	0.4923	50.9414	0.4923	50.9414	0.4923	50.9414	0.4923	50.9414	0.4923

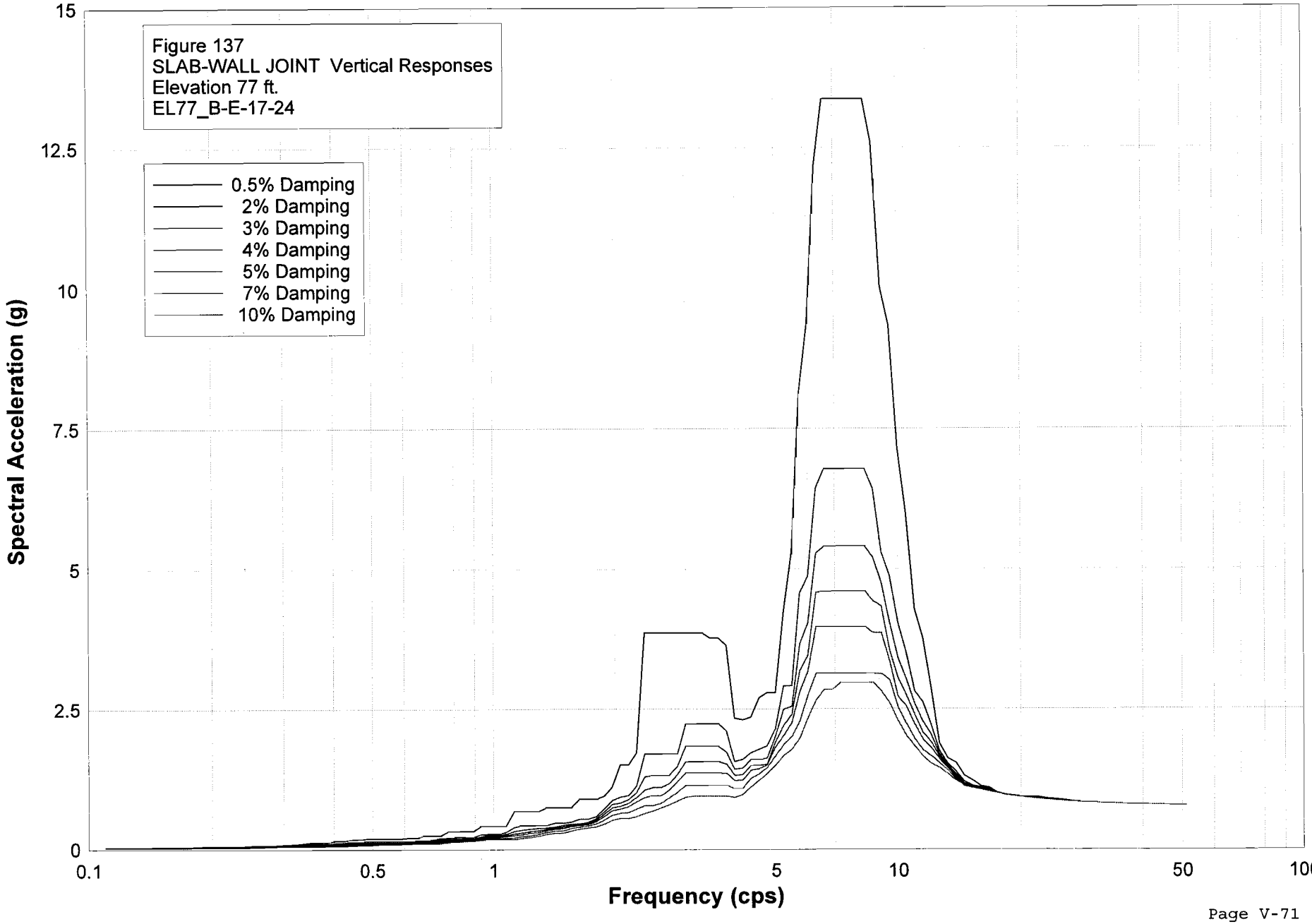
Figure 137
SLAB-WALL JOINT Vertical Responses
Elevation 77 ft.
EL77_B-E-17-24
0.5% Damping
2% Damping
3% Damping
4% Damping
5% Damping
7% Damping
10% Damping
Spectral Acceleration (g)
15
12.5
10
7.5
5
2.5
0
0.1
0.5
1
5
10
50
100
Frequency (cps)

S_PTWW137.grf
RPP-WTP Pretreatment Facility ISRS
Calc No.: 24590-PTF-S0C-S15T-00005, Rev. 0B
Frequency (cps)
Spectral Acceleration (g)
Figure 137
SLAB-WALL JOINT Vertical Responses
Elevation 77 ft.
EL77_B-E-17-24

Damping	0.50%	Damping	2%	Damping	3%	Damping	4%	Damping	5%	Damping	7%	Damping	10%
Freq.	Accel.	Freq.	Accel.	Freq.	Accel.	Freq.	Accel.	Freq.	Accel.	Freq.	Accel.	Freq.	Accel.
0.1098	0.0329	0.1098	0.0296	0.1098	0.0278	0.1098	0.0268	0.1098	0.0259	0.1098	0.0243	0.1098	0.0227
0.115	0.0347	0.115	0.0312	0.115	0.0291	0.115	0.0273	0.115	0.0261	0.115	0.0247	0.115	0.0232
0.1204	0.0348	0.1204	0.0313	0.1204	0.0293	0.1204	0.0275	0.1204	0.0261	0.1204	0.0247	0.1204	0.0232
0.1262	0.0349	0.1262	0.0313	0.1262	0.0293	0.1262	0.0275	0.1262	0.0261	0.1262	0.0247	0.1262	0.0232
0.1322	0.0349	0.1322	0.0313	0.1322	0.0293	0.1322	0.0275	0.1322	0.0261	0.1322	0.0247	0.1322	0.0232
0.1385	0.0349	0.1385	0.0313	0.1385	0.0293	0.1385	0.0275	0.1385	0.0262	0.1385	0.0248	0.1385	0.0232
0.1451	0.0349	0.1451	0.0313	0.1451	0.0293	0.1451	0.0275	0.1451	0.0262	0.1451	0.0248	0.1451	0.0235
0.152	0.0349	0.152	0.0313	0.152	0.0293	0.152	0.0278	0.152	0.0271	0.152	0.0258	0.152	0.0246
0.1592	0.0349	0.1592	0.0313	0.1592	0.0295	0.1592	0.0288	0.1592	0.0282	0.1592	0.0271	0.1592	0.0258
0.1668	0.0349	0.1668	0.0313	0.1668	0.0302	0.1668	0.0294	0.1668	0.0288	0.1668	0.0277	0.1668	0.0266
0.1748	0.0423	0.1748	0.0358	0.1748	0.0324	0.1748	0.0297	0.1748	0.0288	0.1748	0.0279	0.1748	0.0269
0.1831	0.0536	0.1831	0.0446	0.1831	0.0399	0.1831	0.0359	0.1831	0.0325	0.1831	0.0284	0.1831	0.0269
0.1918	0.0578	0.1918	0.0479	0.1918	0.0426	0.1918	0.0381	0.1918	0.0354	0.1918	0.0331	0.1918	0.0306
0.2009	0.0578	0.2009	0.0479	0.2009	0.0426	0.2009	0.0399	0.2009	0.0383	0.2009	0.0356	0.2009	0.0325
0.2105	0.0578	0.2105	0.0479	0.2105	0.0426	0.2105	0.0401	0.2105	0.0385	0.2105	0.0358	0.2105	0.0336
0.2205	0.0578	0.2205	0.0479	0.2205	0.0438	0.2205	0.0425	0.2205	0.0412	0.2205	0.0389	0.2205	0.036
0.231	0.0582	0.231	0.0496	0.231	0.0468	0.231	0.0447	0.231	0.0432	0.231	0.0403	0.231	0.0368
0.242	0.0628	0.242	0.0559	0.242	0.0518	0.242	0.0483	0.242	0.0457	0.242	0.0415	0.242	0.0383
0.2535	0.0718	0.2535	0.0628	0.2535	0.0583	0.2535	0.0547	0.2535	0.0515	0.2535	0.0468	0.2535	0.0422
0.2656	0.0718	0.2656	0.0628	0.2656	0.0583	0.2656	0.0547	0.2656	0.0515	0.2656	0.0468	0.2656	0.0422
0.2783	0.0718	0.2783	0.0628	0.2783	0.0583	0.2783	0.0547	0.2783	0.0515	0.2783	0.0468	0.2783	0.0422
0.2915	0.0751	0.2915	0.0675	0.2915	0.0638	0.2915	0.0605	0.2915	0.0576	0.2915	0.0527	0.2915	0.0473
0.3054	0.0882	0.3054	0.0765	0.3054	0.0701	0.3054	0.0658	0.3054	0.0621	0.3054	0.0561	0.3054	0.0493
0.3199	0.0922	0.3199	0.0798	0.3199	0.0729	0.3199	0.067	0.3199	0.0621	0.3199	0.0561	0.3199	0.0493
0.3352	0.1108	0.3352	0.0902	0.3352	0.0805	0.3352	0.0732	0.3352	0.0674	0.3352	0.0595	0.3352	0.0526
0.3511	0.1266	0.3511	0.096	0.3511	0.0832	0.3511	0.0743	0.3511	0.0692	0.3511	0.0614	0.3511	0.0542
0.3678	0.1266	0.3678	0.096	0.3678	0.0851	0.3678	0.078	0.3678	0.072	0.3678	0.0628	0.3678	0.0542

0.3853	0.1266	0.3853	0.0968	0.3853	0.0891	0.3853	0.0825	0.3853	0.0771	0.3853	0.0679	0.3853	0.0575
0.4037	0.1556	0.4037	0.1128	0.4037	0.0977	0.4037	0.0862	0.4037	0.0772	0.4037	0.0679	0.4037	0.0575
0.4229	0.1556	0.4229	0.1198	0.4229	0.1048	0.4229	0.0928	0.4229	0.0831	0.4229	0.0687	0.4229	0.0575
0.4431	0.1788	0.4431	0.1373	0.4431	0.1175	0.4431	0.1021	0.4431	0.09	0.4431	0.0727	0.4431	0.062
0.4642	0.1788	0.4642	0.1373	0.4642	0.1175	0.4642	0.1021	0.4642	0.0924	0.4642	0.0797	0.4642	0.0684
0.4863	0.1989	0.4863	0.1478	0.4863	0.1261	0.4863	0.1102	0.4863	0.0981	0.4863	0.0811	0.4863	0.0718
0.5094	0.1989	0.5094	0.1478	0.5094	0.1261	0.5094	0.1102	0.5094	0.0999	0.5094	0.0883	0.5094	0.0755
0.5337	0.1989	0.5337	0.1478	0.5337	0.1261	0.5337	0.1123	0.5337	0.1057	0.5337	0.0955	0.5337	0.0848
0.5591	0.1989	0.5591	0.1478	0.5591	0.1261	0.5591	0.1123	0.5591	0.107	0.5591	0.0991	0.5591	0.0891
0.5857	0.1996	0.5857	0.1489	0.5857	0.1273	0.5857	0.1124	0.5857	0.1076	0.5857	0.0992	0.5857	0.0891
0.6136	0.2118	0.6136	0.1492	0.6136	0.1284	0.6136	0.1155	0.6136	0.1076	0.6136	0.0992	0.6136	0.0891
0.6428	0.2118	0.6428	0.1607	0.6428	0.1455	0.6428	0.1342	0.6428	0.1253	0.6428	0.1121	0.6428	0.1004
0.6734	0.2447	0.6734	0.168	0.6734	0.1558	0.6734	0.1454	0.6734	0.1366	0.6734	0.1223	0.6734	0.1071
0.7055	0.2447	0.7055	0.1758	0.7055	0.1558	0.7055	0.1454	0.7055	0.1366	0.7055	0.1223	0.7055	0.1071
0.7391	0.2447	0.7391	0.2046	0.7391	0.1828	0.7391	0.165	0.7391	0.1501	0.7391	0.1276	0.7391	0.1108
0.7743	0.3235	0.7743	0.2046	0.7743	0.1828	0.7743	0.1668	0.7743	0.1542	0.7743	0.1338	0.7743	0.1258
0.8111	0.3235	0.8111	0.2226	0.8111	0.1927	0.8111	0.1741	0.8111	0.162	0.8111	0.148	0.8111	0.1388
0.8497	0.3235	0.8497	0.2226	0.8497	0.1989	0.8497	0.1825	0.8497	0.1686	0.8497	0.148	0.8497	0.144
0.8902	0.3235	0.8902	0.2226	0.8902	0.1989	0.8902	0.1825	0.8902	0.1686	0.8902	0.1499	0.8902	0.1536
0.9326	0.4162	0.9326	0.2704	0.9326	0.2331	0.9326	0.2122	0.9326	0.1988	0.9326	0.1834	0.9326	0.1717
0.977	0.4162	0.977	0.2758	0.977	0.2548	0.977	0.2364	0.977	0.2215	0.977	0.2006	0.977	0.1822
1.0235	0.4162	1.0235	0.2758	1.0235	0.2548	1.0235	0.2364	1.0235	0.2215	1.0235	0.2006	1.0235	0.1822
1.0723	0.4162	1.0723	0.3054	1.0723	0.276	1.0723	0.2529	1.0723	0.2346	1.0723	0.2077	1.0723	0.1835
1.1233	0.6808	1.1233	0.3906	1.1233	0.3224	1.1233	0.2796	1.1233	0.25	1.1233	0.2121	1.1233	0.1835
1.1768	0.6808	1.1768	0.4285	1.1768	0.3494	1.1768	0.3004	1.1768	0.2678	1.1768	0.2326	1.1768	0.2022
1.2328	0.6808	1.2328	0.4285	1.2328	0.362	1.2328	0.3249	1.2328	0.2939	1.2328	0.2462	1.2328	0.2197
1.2916	0.6808	1.2916	0.4285	1.2916	0.3767	1.2916	0.3361	1.2916	0.3025	1.2916	0.2706	1.2916	0.238
1.353	0.7474	1.353	0.4307	1.353	0.3822	1.353	0.3605	1.353	0.3408	1.353	0.3074	1.353	0.2695
1.4175	0.7474	1.4175	0.4745	1.4175	0.399	1.4175	0.3783	1.4175	0.3595	1.4175	0.327	1.4175	0.2904
1.485	0.7474	1.485	0.4745	1.485	0.4308	1.485	0.4027	1.485	0.3776	1.485	0.3367	1.485	0.2965
1.5557	0.7474	1.5557	0.4917	1.5557	0.4567	1.5557	0.4327	1.5557	0.4106	1.5557	0.3746	1.5557	0.3318
1.6298	0.8991	1.6298	0.5424	1.6298	0.4596	1.6298	0.4435	1.6298	0.4278	1.6298	0.3983	1.6298	0.362
1.7074	0.8991	1.7074	0.5424	1.7074	0.4907	1.7074	0.4675	1.7074	0.4447	1.7074	0.4175	1.7074	0.3835
1.7887	0.8991	1.7887	0.5865	1.7887	0.5461	1.7887	0.5203	1.7887	0.498	1.7887	0.4559	1.7887	0.4044
1.8738	0.9445	1.8738	0.7195	1.8738	0.6654	1.8738	0.6223	1.8738	0.5827	1.8738	0.5201	1.8738	0.4509
1.963	1.1123	1.963	0.8748	1.963	0.8034	1.963	0.7426	1.963	0.691	1.963	0.6109	1.963	0.5227
2.0565	1.5088	2.0565	0.933	2.0565	0.8293	2.0565	0.7716	2.0565	0.7237	2.0565	0.645	2.0565	0.5543
2.1544	1.5088	2.1544	0.961	2.1544	0.8884	2.1544	0.8244	2.1544	0.7652	2.1544	0.6607	2.1544	0.5543
2.257	1.7236	2.257	1.1268	2.257	1.013	2.257	0.9252	2.257	0.849	2.257	0.7236	2.257	0.59

2.3645	3.866	2.3645	1.6971	2.3645	1.2916	2.3645	1.0575	2.3645	0.9248	2.3645	0.7851	2.3645	0.6424
2.4771	3.866	2.4771	1.6971	2.4771	1.3169	2.4771	1.1038	2.4771	0.9563	2.4771	0.7851	2.4771	0.6887
2.595	3.866	2.595	1.6971	2.595	1.3169	2.595	1.1038	2.595	0.9563	2.595	0.8262	2.595	0.7426
2.7186	3.866	2.7186	1.6971	2.7186	1.3169	2.7186	1.1727	2.7186	1.0567	2.7186	0.9171	2.7186	0.7945
2.848	3.866	2.848	1.6971	2.848	1.4804	2.848	1.3327	2.848	1.206	2.848	1.018	2.848	0.8669
2.9836	3.866	2.9836	2.2406	2.9836	1.8408	2.9836	1.5625	2.9836	1.3591	2.9836	1.1387	2.9836	0.928
3.1257	3.866	3.1257	2.2406	3.1257	1.8408	3.1257	1.5625	3.1257	1.3591	3.1257	1.143	3.1257	0.9493
3.2745	3.866	3.2745	2.2406	3.2745	1.8408	3.2745	1.5625	3.2745	1.3591	3.2745	1.143	3.2745	0.9493
3.4305	3.7694	3.4305	2.2406	3.4305	1.8408	3.4305	1.5625	3.4305	1.3591	3.4305	1.143	3.4305	0.9493
3.5938	3.7694	3.5938	2.2406	3.5938	1.8408	3.5938	1.5625	3.5938	1.3591	3.5938	1.143	3.5938	0.9493
3.7649	3.6368	3.7649	2.1031	3.7649	1.7293	3.7649	1.5178	3.7649	1.3536	3.7649	1.143	3.7649	0.9493
3.9442	2.3406	3.9442	1.5628	3.9442	1.4278	3.9442	1.3158	3.9442	1.2252	3.9442	1.0832	3.9442	0.9243
4.132	2.3105	4.132	1.6043	4.132	1.4457	4.132	1.33	4.132	1.2346	4.132	1.0881	4.132	0.9795
4.3288	2.3606	4.3288	1.7203	4.3288	1.5989	4.3288	1.4967	4.3288	1.4076	4.3288	1.2637	4.3288	1.1134
4.5349	2.7028	4.5349	1.7884	4.5349	1.5989	4.5349	1.4967	4.5349	1.4341	4.5349	1.3413	4.5349	1.2294
4.7508	2.7941	4.7508	1.8475	4.7508	1.626	4.7508	1.5163	4.7508	1.5039	4.7508	1.4543	4.7508	1.3491
4.977	2.7941	4.977	2.1563	4.977	2.0226	4.977	1.9141	4.977	1.822	4.977	1.6659	4.977	1.4987
5.214	4.219	5.214	2.9143	5.214	2.4943	5.214	2.205	5.214	2.0309	5.214	1.8627	5.214	1.6667
5.4623	5.2918	5.4623	2.9192	5.4623	2.5485	5.4623	2.4104	5.4623	2.2607	5.4623	2.0112	5.4623	1.7876
5.7224	8.1324	5.7224	4.5631	5.7224	3.6583	5.7224	3.1823	5.7224	2.8095	5.7224	2.2869	5.7224	1.9827
5.9948	9.3796	5.9948	4.8676	5.9948	4.0343	5.9948	3.4641	5.9948	3.179	5.9948	2.7514	5.9948	2.3427
6.2803	12.1837	6.2803	6.4303	6.2803	5.2789	6.2803	4.5801	6.2803	3.9709	6.2803	3.1363	6.2803	2.6609
6.5793	13.368	6.5793	6.7759	6.5793	5.4003	6.5793	4.5998	6.5793	3.9709	6.5793	3.1363	6.5793	2.8505
6.8926	13.368	6.8926	6.7759	6.8926	5.4003	6.8926	4.5998	6.8926	3.9709	6.8926	3.1363	6.8926	2.8505
7.2208	13.368	7.2208	6.7759	7.2208	5.4003	7.2208	4.5998	7.2208	3.9709	7.2208	3.1363	7.2208	2.9722
7.5646	13.368	7.5646	6.7759	7.5646	5.4003	7.5646	4.5998	7.5646	3.9709	7.5646	3.1363	7.5646	2.9722
7.9248	13.368	7.9248	6.7759	7.9248	5.4003	7.9248	4.5998	7.9248	3.9709	7.9248	3.1363	7.9248	2.9722
8.3022	13.368	8.3022	6.7759	8.3022	5.4003	8.3022	4.5998	8.3022	3.9709	8.3022	3.1363	8.3022	2.9722
8.6975	12.5927	8.6975	6.4217	8.6975	5.1938	8.6975	4.425	8.6975	3.8585	8.6975	3.1363	8.6975	2.9722
9.1116	10.032	9.1116	5.2956	9.1116	4.7479	9.1116	4.3324	9.1116	3.8585	9.1116	3.1278	9.1116	2.8105
9.5455	9.3441	9.5455	4.8676	9.5455	4.0343	9.5455	3.5395	9.5455	3.3508	9.5455	3.014	9.5455	2.5933
10	7.1545	10	4.045	10	3.4174	10	3.0579	10	2.7208	10	2.5271	10	2.2822
10.4762	5.9747	10.4762	3.5047	10.4762	3.0327	10.4762	2.7438	10.4762	2.5427	10.4762	2.2327	10.4762	2.0169
10.975	4.2808	10.975	2.8111	10.975	2.5879	10.975	2.3944	10.975	2.2183	10.975	1.956	10.975	1.8268
11.4976	3.7662	11.4976	2.6092	11.4976	2.2639	11.4976	2.0699	11.4976	1.9469	11.4976	1.7588	11.4976	1.648
12.045	2.8902	12.045	2.215	12.045	2.0392	12.045	1.9048	12.045	1.8023	12.045	1.6549	12.045	1.5218
12.6186	1.8788	12.6186	1.7416	12.6186	1.6839	12.6186	1.6394	12.6186	1.6018	12.6186	1.5334	12.6186	1.4443
13.2194	1.6128	13.2194	1.5184	13.2194	1.4878	13.2194	1.4617	13.2194	1.4374	13.2194	1.393	13.2194	1.3351
13.8489	1.5359	13.8489	1.3774	13.8489	1.3281	13.8489	1.2932	13.8489	1.2655	13.8489	1.2404	13.8489	1.2179

14.5083	1.3107	14.5083	1.2007	14.5083	1.1687	14.5083	1.1419	14.5083	1.121	14.5083	1.1308	14.5083	1.1366
15.1991	1.2196	15.1991	1.1295	15.1991	1.1116	15.1991	1.1016	15.1991	1.0957	15.1991	1.0862	15.1991	1.09
15.9228	1.1205	15.9228	1.1	15.9228	1.0915	15.9228	1.0833	15.9228	1.0757	15.9228	1.0631	15.9228	1.0579
16.681	1.0927	16.681	1.0685	16.681	1.058	16.681	1.0504	16.681	1.0446	16.681	1.0363	16.681	1.0281
17.4753	1.0023	17.4753	1.0048	17.4753	1.0053	17.4753	1.0048	17.4753	1.0038	17.4753	1.0012	17.4753	0.9968
18.3074	0.961	18.3074	0.9671	18.3074	0.9687	18.3074	0.9693	18.3074	0.9695	18.3074	0.969	18.3074	0.9673
19.1791	0.9518	19.1791	0.9477	19.1791	0.9463	19.1791	0.9455	19.1791	0.9448	19.1791	0.9436	19.1791	0.9415
20.0923	0.9305	20.0923	0.9309	20.0923	0.9296	20.0923	0.9286	20.0923	0.9278	20.0923	0.9263	20.0923	0.9238
21.049	0.9233	21.049	0.9146	21.049	0.9138	21.049	0.9133	21.049	0.9127	21.049	0.9111	21.049	0.9085
22.0513	0.9233	22.0513	0.908	22.0513	0.9049	22.0513	0.9025	22.0513	0.9006	22.0513	0.8977	22.0513	0.8945
23.1013	0.8961	23.1013	0.8852	23.1013	0.8849	23.1013	0.8846	23.1013	0.884	23.1013	0.8827	23.1013	0.8807
24.2013	0.8833	24.2013	0.8727	24.2013	0.8712	24.2013	0.87	24.2013	0.8691	24.2013	0.869	24.2013	0.868
25.3536	0.8713	25.3536	0.8633	25.3536	0.8611	25.3536	0.8595	25.3536	0.8586	25.3536	0.858	25.3536	0.8571
26.5609	0.8529	26.5609	0.8516	26.5609	0.8504	26.5609	0.8496	26.5609	0.8491	26.5609	0.8483	26.5609	0.8474
27.8256	0.838	27.8256	0.8397	27.8256	0.8399	27.8256	0.8398	27.8256	0.8396	27.8256	0.8392	27.8256	0.8385
29.1505	0.8335	29.1505	0.8322	29.1505	0.8319	29.1505	0.8316	29.1505	0.8313	29.1505	0.8309	29.1505	0.8303
30.5386	0.8228	30.5386	0.8232	30.5386	0.8232	30.5386	0.8232	30.5386	0.8232	30.5386	0.8231	30.5386	0.8229
31.9927	0.8147	31.9927	0.8153	31.9927	0.8155	31.9927	0.8158	31.9927	0.8159	31.9927	0.8161	31.9927	0.8162
33.516	0.8095	33.516	0.8097	33.516	0.8098	33.516	0.8099	33.516	0.8101	33.516	0.8102	33.516	0.8104
35.1119	0.8048	35.1119	0.8049	35.1119	0.805	35.1119	0.8051	35.1119	0.8051	35.1119	0.8052	35.1119	0.8054
36.7838	0.8005	36.7838	0.8006	36.7838	0.8007	36.7838	0.8007	36.7838	0.8007	36.7838	0.8008	36.7838	0.8009
38.5353	0.7966	38.5353	0.7967	38.5353	0.7967	38.5353	0.7967	38.5353	0.7968	38.5353	0.7968	38.5353	0.7969
40.3702	0.7931	40.3702	0.7931	40.3702	0.7931	40.3702	0.7931	40.3702	0.7932	40.3702	0.7932	40.3702	0.7933
42.2924	0.7898	42.2924	0.7898	42.2924	0.7898	42.2924	0.7898	42.2924	0.7899	42.2924	0.7899	42.2924	0.79
44.3062	0.7868	44.3062	0.7868	44.3062	0.7868	44.3062	0.7868	44.3062	0.7868	44.3062	0.7869	44.3062	0.787
46.4159	0.7839	46.4159	0.7839	46.4159	0.784	46.4159	0.784	46.4159	0.784	46.4159	0.7841	46.4159	0.7842
48.626	0.7813	48.626	0.7813	48.626	0.7813	48.626	0.7813	48.626	0.7814	48.626	0.7814	48.626	0.7815
50.9414	0.7788	50.9414	0.7788	50.9414	0.7788	50.9414	0.7788	50.9414	0.7789	50.9414	0.7789	50.9414	0.7791

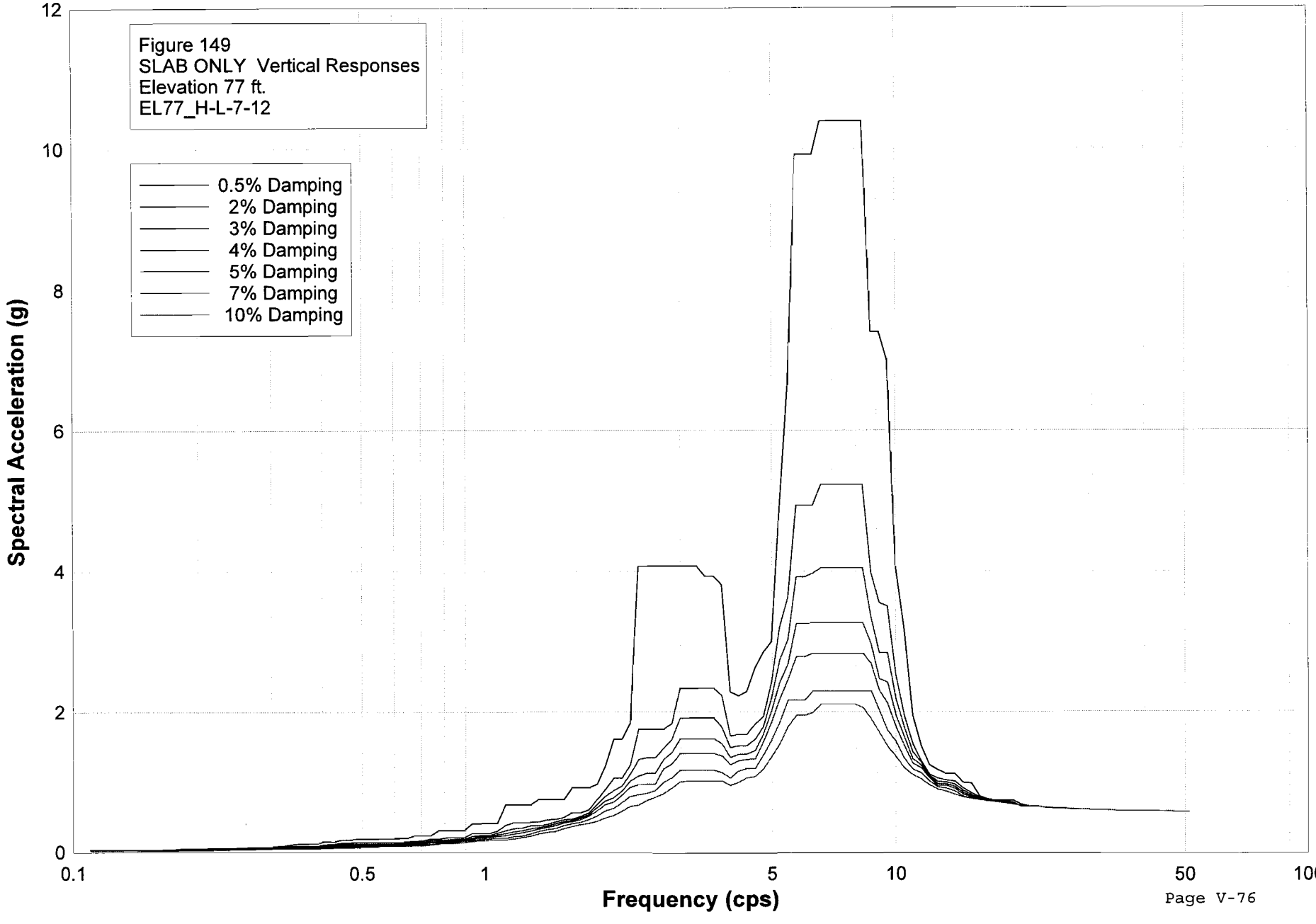
Figure 149
SLAB ONLY Vertical Responses
Elevation 77 ft.
EL77_H-L-7-12
0.5% Damping
2% Damping
3% Damping
4% Damping
5% Damping
7% Damping
10% Damping
Spectral Acceleration (g)
Frequency (cps)
0
2
4
6
8
10
12
0.1
0.5
1
5
10
50
100

S_PTWW149.grf
RPP-WTP Pretreatment Facility ISRS
Calc No.: 24590-PTF-S0C-S15T-00005, Rev. 0B
Frequency (cps)
Spectral Acceleration (g)
Figure 149
SLAB ONLY Vertical Responses
Elevation 77 ft.
EL77_H-L-7-12

Damping	0.50%	Damping	2%	Damping	3%	Damping	4%	Damping	5%	Damping	7%	Damping	10%
Freq.	Accel.	Freq.	Accel.	Freq.	Accel.	Freq.	Accel.	Freq.	Accel.	Freq.	Accel.	Freq.	Accel.
0.1098	0.033	0.1098	0.0296	0.1098	0.0277	0.1098	0.0266	0.1098	0.0257	0.1098	0.024	0.1098	0.0226
0.115	0.0347	0.115	0.0312	0.115	0.0291	0.115	0.0273	0.115	0.0261	0.115	0.0246	0.115	0.023
0.1204	0.0348	0.1204	0.0313	0.1204	0.0292	0.1204	0.0274	0.1204	0.0261	0.1204	0.0246	0.1204	0.023
0.1262	0.0349	0.1262	0.0313	0.1262	0.0292	0.1262	0.0274	0.1262	0.0261	0.1262	0.0246	0.1262	0.023
0.1322	0.0349	0.1322	0.0313	0.1322	0.0292	0.1322	0.0274	0.1322	0.0261	0.1322	0.0246	0.1322	0.023
0.1385	0.0349	0.1385	0.0313	0.1385	0.0292	0.1385	0.0274	0.1385	0.0261	0.1385	0.0246	0.1385	0.023
0.1451	0.0349	0.1451	0.0313	0.1451	0.0292	0.1451	0.0274	0.1451	0.0261	0.1451	0.0245	0.1451	0.0231
0.152	0.035	0.152	0.0313	0.152	0.0292	0.152	0.0276	0.152	0.0269	0.152	0.0256	0.152	0.0239
0.1592	0.035	0.1592	0.0313	0.1592	0.0292	0.1592	0.0285	0.1592	0.0278	0.1592	0.0265	0.1592	0.0252
0.1668	0.035	0.1668	0.0313	0.1668	0.0299	0.1668	0.0291	0.1668	0.0284	0.1668	0.0273	0.1668	0.026
0.1748	0.0423	0.1748	0.0359	0.1748	0.0325	0.1748	0.0297	0.1748	0.0285	0.1748	0.0275	0.1748	0.0262
0.1831	0.0536	0.1831	0.0446	0.1831	0.0399	0.1831	0.0359	0.1831	0.0325	0.1831	0.0279	0.1831	0.0266
0.1918	0.0578	0.1918	0.0479	0.1918	0.0426	0.1918	0.0382	0.1918	0.0353	0.1918	0.0328	0.1918	0.0303
0.2009	0.0578	0.2009	0.0479	0.2009	0.0426	0.2009	0.0398	0.2009	0.0381	0.2009	0.0353	0.2009	0.032
0.2105	0.0578	0.2105	0.0479	0.2105	0.0426	0.2105	0.0398	0.2105	0.0381	0.2105	0.0361	0.2105	0.0339
0.2205	0.0578	0.2205	0.0479	0.2205	0.044	0.2205	0.0427	0.2205	0.0414	0.2205	0.0391	0.2205	0.0363
0.231	0.0581	0.231	0.0501	0.231	0.0473	0.231	0.0449	0.231	0.0433	0.231	0.0405	0.231	0.0371
0.242	0.0626	0.242	0.0557	0.242	0.0519	0.242	0.0485	0.242	0.0454	0.242	0.0416	0.242	0.0385
0.2535	0.0718	0.2535	0.0633	0.2535	0.0588	0.2535	0.055	0.2535	0.0519	0.2535	0.047	0.2535	0.0422
0.2656	0.0718	0.2656	0.0633	0.2656	0.0588	0.2656	0.055	0.2656	0.0519	0.2656	0.047	0.2656	0.0422
0.2783	0.0718	0.2783	0.0633	0.2783	0.0588	0.2783	0.055	0.2783	0.0519	0.2783	0.047	0.2783	0.0422
0.2915	0.0748	0.2915	0.0674	0.2915	0.0634	0.2915	0.0599	0.2915	0.057	0.2915	0.0521	0.2915	0.0463
0.3054	0.088	0.3054	0.0765	0.3054	0.0702	0.3054	0.0654	0.3054	0.0616	0.3054	0.0554	0.3054	0.0485
0.3199	0.0924	0.3199	0.08	0.3199	0.0733	0.3199	0.0676	0.3199	0.0627	0.3199	0.0554	0.3199	0.0485
0.3352	0.1119	0.3352	0.091	0.3352	0.0811	0.3352	0.0736	0.3352	0.0677	0.3352	0.0594	0.3352	0.0521
0.3511	0.1269	0.3511	0.096	0.3511	0.0832	0.3511	0.0737	0.3511	0.0685	0.3511	0.0607	0.3511	0.0533
0.3678	0.1269	0.3678	0.096	0.3678	0.0854	0.3678	0.0784	0.3678	0.0725	0.3678	0.0632	0.3678	0.0538

0.3853	0.1269	0.3853	0.0967	0.3853	0.0889	0.3853	0.0828	0.3853	0.0774	0.3853	0.068	0.3853	0.0577
0.4037	0.1558	0.4037	0.1134	0.4037	0.0984	0.4037	0.0868	0.4037	0.0777	0.4037	0.068	0.4037	0.0577
0.4229	0.1558	0.4229	0.12	0.4229	0.1046	0.4229	0.0924	0.4229	0.0826	0.4229	0.0685	0.4229	0.0577
0.4431	0.1796	0.4431	0.138	0.4431	0.1181	0.4431	0.1026	0.4431	0.0904	0.4431	0.073	0.4431	0.0635
0.4642	0.1796	0.4642	0.138	0.4642	0.1181	0.4642	0.1026	0.4642	0.0907	0.4642	0.0774	0.4642	0.0671
0.4863	0.1988	0.4863	0.1472	0.4863	0.1254	0.4863	0.1094	0.4863	0.0976	0.4863	0.0828	0.4863	0.0708
0.5094	0.1988	0.5094	0.1472	0.5094	0.1254	0.5094	0.1094	0.5094	0.1005	0.5094	0.0887	0.5094	0.0766
0.5337	0.1988	0.5337	0.1472	0.5337	0.1254	0.5337	0.1132	0.5337	0.1066	0.5337	0.0963	0.5337	0.0852
0.5591	0.1988	0.5591	0.1472	0.5591	0.1254	0.5591	0.1132	0.5591	0.1071	0.5591	0.0989	0.5591	0.0884
0.5857	0.2009	0.5857	0.1489	0.5857	0.127	0.5857	0.1132	0.5857	0.1071	0.5857	0.0989	0.5857	0.0884
0.6136	0.2117	0.6136	0.1492	0.6136	0.1286	0.6136	0.116	0.6136	0.1077	0.6136	0.0989	0.6136	0.0884
0.6428	0.2117	0.6428	0.162	0.6428	0.1468	0.6428	0.1344	0.6428	0.1242	0.6428	0.1094	0.6428	0.0956
0.6734	0.2463	0.6734	0.168	0.6734	0.1527	0.6734	0.1421	0.6734	0.1328	0.6734	0.1174	0.6734	0.101
0.7055	0.2463	0.7055	0.1736	0.7055	0.1527	0.7055	0.1421	0.7055	0.1328	0.7055	0.1175	0.7055	0.1013
0.7391	0.2463	0.7391	0.2014	0.7391	0.1797	0.7391	0.1616	0.7391	0.1463	0.7391	0.1236	0.7391	0.1129
0.7743	0.3234	0.7743	0.2014	0.7743	0.1797	0.7743	0.1646	0.7743	0.1516	0.7743	0.134	0.7743	0.1268
0.8111	0.3234	0.8111	0.2195	0.8111	0.1922	0.8111	0.1747	0.8111	0.1629	0.8111	0.1485	0.8111	0.1372
0.8497	0.3234	0.8497	0.2195	0.8497	0.1962	0.8497	0.1798	0.8497	0.1658	0.8497	0.1485	0.8497	0.1406
0.8902	0.3234	0.8902	0.2211	0.8902	0.201	0.8902	0.1842	0.8902	0.1702	0.8902	0.1486	0.8902	0.1489
0.9326	0.4198	0.9326	0.2792	0.9326	0.2383	0.9326	0.2146	0.9326	0.1992	0.9326	0.1804	0.9326	0.1644
0.977	0.4198	0.977	0.2792	0.977	0.2504	0.977	0.2316	0.977	0.2163	0.977	0.1944	0.977	0.1753
1.0235	0.4198	1.0235	0.2792	1.0235	0.2504	1.0235	0.2316	1.0235	0.2191	1.0235	0.2007	1.0235	0.1804
1.0723	0.4198	1.0723	0.3095	1.0723	0.2808	1.0723	0.2575	1.0723	0.2389	1.0723	0.2132	1.0723	0.189
1.1233	0.6844	1.1233	0.3935	1.1233	0.3182	1.1233	0.2754	1.1233	0.2456	1.1233	0.2132	1.1233	0.189
1.1768	0.6844	1.1768	0.4309	1.1768	0.3456	1.1768	0.3014	1.1768	0.27	1.1768	0.2317	1.1768	0.2005
1.2328	0.6844	1.2328	0.4309	1.2328	0.3555	1.2328	0.3182	1.2328	0.2875	1.2328	0.242	1.2328	0.2184
1.2916	0.6844	1.2916	0.4367	1.2916	0.3871	1.2916	0.3464	1.2916	0.3129	1.2916	0.2714	1.2916	0.2384
1.353	0.7599	1.353	0.4415	1.353	0.3871	1.353	0.362	1.353	0.3421	1.353	0.3087	1.353	0.2704
1.4175	0.7599	1.4175	0.4716	1.4175	0.4059	1.4175	0.3841	1.4175	0.3646	1.4175	0.3316	1.4175	0.2943
1.485	0.7599	1.485	0.4772	1.485	0.4445	1.485	0.416	1.485	0.3917	1.485	0.3508	1.485	0.3069
1.5557	0.7599	1.5557	0.5063	1.5557	0.4753	1.5557	0.4507	1.5557	0.4289	1.5557	0.3928	1.5557	0.3496
1.6298	0.9291	1.6298	0.5737	1.6298	0.4806	1.6298	0.4629	1.6298	0.4471	1.6298	0.4181	1.6298	0.3789
1.7074	0.9291	1.7074	0.5737	1.7074	0.522	1.7074	0.4969	1.7074	0.4744	1.7074	0.4365	1.7074	0.4026
1.7887	0.9291	1.7887	0.6146	1.7887	0.5734	1.7887	0.5478	1.7887	0.5228	1.7887	0.4764	1.7887	0.4212
1.8738	0.9814	1.8738	0.7586	1.8738	0.696	1.8738	0.6464	1.8738	0.6012	1.8738	0.5264	1.8738	0.453
1.963	1.2411	1.963	0.9059	1.963	0.8076	1.963	0.7419	1.963	0.6881	1.963	0.5999	1.963	0.5004
2.0565	1.6176	2.0565	1.0647	2.0565	0.8875	2.0565	0.7869	2.0565	0.723	2.0565	0.6342	2.0565	0.5339
2.1544	1.6176	2.1544	1.0647	2.1544	0.9533	2.1544	0.8819	2.1544	0.8219	2.1544	0.7158	2.1544	0.5935
2.257	1.8429	2.257	1.2512	2.257	1.1235	2.257	1.0205	2.257	0.9348	2.257	0.8052	2.257	0.6626

2.3645	4.0699	2.3645	1.7554	2.3645	1.3289	2.3645	1.0963	2.3645	0.9746	2.3645	0.8303	2.3645	0.6835
2.4771	4.0699	2.4771	1.7554	2.4771	1.3554	2.4771	1.1336	2.4771	0.9787	2.4771	0.8493	2.4771	0.746
2.595	4.0699	2.595	1.7554	2.595	1.3554	2.595	1.1336	2.595	0.9787	2.595	0.8889	2.595	0.7961
2.7186	4.0699	2.7186	1.7554	2.7186	1.4847	2.7186	1.3257	2.7186	1.1963	2.7186	1.0049	2.7186	0.8443
2.848	4.0699	2.848	1.8374	2.848	1.6183	2.848	1.4326	2.848	1.2673	2.848	1.0698	2.848	0.9235
2.9836	4.0699	2.9836	2.3349	2.9836	1.9127	2.9836	1.6189	2.9836	1.412	2.9836	1.1782	2.9836	1.0145
3.1257	4.0699	3.1257	2.3349	3.1257	1.9127	3.1257	1.6189	3.1257	1.412	3.1257	1.1782	3.1257	1.0257
3.2745	4.0699	3.2745	2.3349	3.2745	1.9127	3.2745	1.6189	3.2745	1.412	3.2745	1.1782	3.2745	1.0257
3.4305	3.9252	3.4305	2.3349	3.4305	1.9127	3.4305	1.6189	3.4305	1.412	3.4305	1.1782	3.4305	1.0257
3.5938	3.9252	3.5938	2.3349	3.5938	1.9127	3.5938	1.6189	3.5938	1.412	3.5938	1.1782	3.5938	1.0257
3.7649	3.804	3.7649	2.2244	3.7649	1.7791	3.7649	1.55	3.7649	1.3773	3.7649	1.1417	3.7649	1.0257
3.9442	2.2828	3.9442	1.6635	3.9442	1.4979	3.9442	1.355	3.9442	1.2502	3.9442	1.0633	3.9442	0.9604
4.132	2.2248	4.132	1.685	4.132	1.5218	4.132	1.4035	4.132	1.3092	4.132	1.1637	4.132	1.0062
4.3288	2.288	4.3288	1.685	4.3288	1.5218	4.3288	1.4071	4.3288	1.3287	4.3288	1.2037	4.3288	1.0665
4.5349	2.6268	4.5349	1.8325	4.5349	1.6161	4.5349	1.4583	4.5349	1.3356	4.5349	1.2037	4.5349	1.0858
4.7508	2.8442	4.7508	1.9334	4.7508	1.7955	4.7508	1.6875	4.7508	1.5786	4.7508	1.3925	4.7508	1.1956
4.977	2.9945	4.977	2.4197	4.977	2.1964	4.977	2.0129	4.977	1.8562	4.977	1.6043	4.977	1.3684
5.214	4.8895	5.214	3.196	5.214	2.7298	5.214	2.4134	5.214	2.1805	5.214	1.8538	5.214	1.5482
5.4623	6.643	5.4623	3.6241	5.4623	3.0266	5.4623	2.6787	5.4623	2.4595	5.4623	2.1662	5.4623	1.7974
5.7224	9.9168	5.7224	4.9346	5.7224	3.9171	5.7224	3.2471	5.7224	2.7804	5.7224	2.1672	5.7224	1.9541
5.9948	9.9168	5.9948	4.9346	5.9948	3.9171	5.9948	3.2471	5.9948	2.7804	5.9948	2.1672	5.9948	1.9541
6.2803	9.9168	6.2803	4.9346	6.2803	3.9685	6.2803	3.2662	6.2803	2.8301	6.2803	2.2953	6.2803	1.9935
6.5793	10.3887	6.5793	5.2245	6.5793	4.0457	6.5793	3.2662	6.5793	2.8301	6.5793	2.2953	6.5793	2.1124
6.8926	10.3887	6.8926	5.2245	6.8926	4.0457	6.8926	3.2662	6.8926	2.8301	6.8926	2.2953	6.8926	2.1124
7.2208	10.3887	7.2208	5.2245	7.2208	4.0457	7.2208	3.2662	7.2208	2.8301	7.2208	2.2953	7.2208	2.1124
7.5646	10.3887	7.5646	5.2245	7.5646	4.0457	7.5646	3.2662	7.5646	2.8301	7.5646	2.2953	7.5646	2.1124
7.9248	10.3887	7.9248	5.2245	7.9248	4.0457	7.9248	3.2662	7.9248	2.8301	7.9248	2.2953	7.9248	2.1124
8.3022	10.3887	8.3022	5.2245	8.3022	4.0457	8.3022	3.2662	8.3022	2.8301	8.3022	2.2953	8.3022	2.0603
8.6975	7.3975	8.6975	3.974	8.6975	3.3379	8.6975	2.9621	8.6975	2.6815	8.6975	2.2953	8.6975	1.8954
9.1116	7.3975	9.1116	3.5465	9.1116	2.8359	9.1116	2.4675	9.1116	2.2993	9.1116	2.0155	9.1116	1.7008
9.5455	6.9962	9.5455	3.4966	9.5455	2.8359	9.5455	2.4192	9.5455	2.1154	9.5455	1.729	9.5455	1.5076
10	4.0615	10	2.522	10	2.1855	10	1.9525	10	1.7893	10	1.5795	10	1.3631
10.4762	3.1699	10.4762	1.9404	10.4762	1.776	10.4762	1.6394	10.4762	1.5179	10.4762	1.337	10.4762	1.2021
10.975	1.9474	10.975	1.5462	10.975	1.4306	10.975	1.3319	10.975	1.272	10.975	1.1863	10.975	1.1066
11.4976	1.5165	11.4976	1.3046	11.4976	1.2807	11.4976	1.2422	11.4976	1.2023	11.4976	1.1318	11.4976	1.0488
12.045	1.2489	12.045	1.1132	12.045	1.0935	12.045	1.0811	12.045	1.0607	12.045	1.0187	12.045	0.9603
12.6186	1.1761	12.6186	1.0559	12.6186	1.0122	12.6186	0.9796	12.6186	0.9552	12.6186	0.9329	12.6186	0.8986
13.2194	1.1222	13.2194	1.0329	13.2194	1.0014	13.2194	0.9756	13.2194	0.9532	13.2194	0.9153	13.2194	0.8706
13.8489	1.1222	13.8489	1.0163	13.8489	0.9733	13.8489	0.9402	13.8489	0.9132	13.8489	0.8719	13.8489	0.8283

14.5083	0.9999	14.5083	0.9199	14.5083	0.8835	14.5083	0.8538	14.5083	0.8294	14.5083	0.7998	14.5083	0.7902
15.1991	0.9904	15.1991	0.8457	15.1991	0.8202	15.1991	0.8039	15.1991	0.7915	15.1991	0.7732	15.1991	0.7648
15.9228	0.8007	15.9228	0.7875	15.9228	0.7748	15.9228	0.7634	15.9228	0.7533	15.9228	0.7476	15.9228	0.7458
16.681	0.7564	16.681	0.745	16.681	0.7406	16.681	0.7383	16.681	0.7367	16.681	0.7341	16.681	0.7307
17.4753	0.7396	17.4753	0.7337	17.4753	0.728	17.4753	0.7234	17.4753	0.7236	17.4753	0.7215	17.4753	0.7171
18.3074	0.7396	18.3074	0.7337	18.3074	0.728	18.3074	0.7222	18.3074	0.7173	18.3074	0.7102	18.3074	0.7033
19.1791	0.7396	19.1791	0.7105	19.1791	0.7035	19.1791	0.6983	19.1791	0.6949	19.1791	0.6904	19.1791	0.6864
20.0923	0.6835	20.0923	0.6497	20.0923	0.6558	20.0923	0.6604	20.0923	0.6634	20.0923	0.6669	20.0923	0.6687
21.049	0.6556	21.049	0.6476	21.049	0.6466	21.049	0.6466	21.049	0.6494	21.049	0.6529	21.049	0.6557
22.0513	0.6556	22.0513	0.6476	22.0513	0.6466	22.0513	0.6461	22.0513	0.646	22.0513	0.6462	22.0513	0.647
23.1013	0.6334	23.1013	0.6388	23.1013	0.6393	23.1013	0.6393	23.1013	0.6394	23.1013	0.6395	23.1013	0.6399
24.2013	0.6321	24.2013	0.6316	24.2013	0.6324	24.2013	0.6327	24.2013	0.6329	24.2013	0.6332	24.2013	0.6335
25.3536	0.6321	25.3536	0.6263	25.3536	0.6267	25.3536	0.627	25.3536	0.6273	25.3536	0.6276	25.3536	0.6279
26.5609	0.6191	26.5609	0.6223	26.5609	0.6227	26.5609	0.6229	26.5609	0.6229	26.5609	0.623	26.5609	0.6231
27.8256	0.618	27.8256	0.617	27.8256	0.6181	27.8256	0.6185	27.8256	0.6187	27.8256	0.6189	27.8256	0.6189
29.1505	0.618	29.1505	0.617	29.1505	0.6164	29.1505	0.6159	29.1505	0.6157	29.1505	0.6154	29.1505	0.6151
30.5386	0.612	30.5386	0.612	30.5386	0.612	30.5386	0.6119	30.5386	0.6118	30.5386	0.6117	30.5386	0.6115
31.9927	0.6082	31.9927	0.6083	31.9927	0.6083	31.9927	0.6083	31.9927	0.6082	31.9927	0.6082	31.9927	0.6081
33.516	0.605	33.516	0.6051	33.516	0.6051	33.516	0.6051	33.516	0.6051	33.516	0.6051	33.516	0.605
35.1119	0.6022	35.1119	0.6022	35.1119	0.6022	35.1119	0.6022	35.1119	0.6022	35.1119	0.6022	35.1119	0.6022
36.7838	0.5997	36.7838	0.5997	36.7838	0.5997	36.7838	0.5997	36.7838	0.5997	36.7838	0.5997	36.7838	0.5997
38.5353	0.5974	38.5353	0.5974	38.5353	0.5974	38.5353	0.5974	38.5353	0.5974	38.5353	0.5974	38.5353	0.5974
40.3702	0.5953	40.3702	0.5953	40.3702	0.5953	40.3702	0.5953	40.3702	0.5953	40.3702	0.5953	40.3702	0.5953
42.2924	0.5934	42.2924	0.5934	42.2924	0.5934	42.2924	0.5934	42.2924	0.5934	42.2924	0.5934	42.2924	0.5935
44.3062	0.5917	44.3062	0.5917	44.3062	0.5917	44.3062	0.5917	44.3062	0.5917	44.3062	0.5917	44.3062	0.5917
46.4159	0.5901	46.4159	0.5901	46.4159	0.5901	46.4159	0.5901	46.4159	0.5901	46.4159	0.5901	46.4159	0.5902
48.626	0.5886	48.626	0.5886	48.626	0.5886	48.626	0.5886	48.626	0.5886	48.626	0.5887	48.626	0.5887
50.9414	0.5873	50.9414	0.5873	50.9414	0.5873	50.9414	0.5873	50.9414	0.5873	50.9414	0.5873	50.9414	0.5874

ATTACHMENT #2

BNI TLP Coupled Structural Analysis Draft Report

Memorandum

To:	Le, E.	MS5-H	Date: June 15, 2006
	Minichiello, J.	MS6-N2	
	Ocoma, E.C.	MS6-N1	
From:	E.O. Weiner		CCN: 122811
Ext:	371 3150		

Subject: **PT TLP COUPLED STRUCTURAL ANALYSIS**

Reference: SCN 24590-PTF-3PS-MEVV-T0001 Rev 1.

Attached is the coupled analysis draft as called for in Appendix U of the reference and containing supplemental tasks to date.

The draft has been checked.

This CCN supercedes CCN 134137.

E.O. Weiner
Structural Analyst
CSA

Attachment Draft: PT TLP Coupled Analysis for Evaluation of Nozzle Loads

Distribution

Copy Coverage	MSIN
Jeffrey, A.H.	MS5-K
Power, J.	MS5-K
Julyk, J.	MS5-I
PDC	MS9-A

BY: E.O. Weiner
DATE: 6/15/06

SUBJECT: PT TLP Coupled Structural Analysis for Evaluation of Nozzle Loads

Contents

1 Objective 2
2 Inputs 3
3 Background 3
4 Applicable Codes and Standards 4
5 Methodology 4
5.1 Piping Models 4
5.2 Vessel and Support Frame Models 4
5.3 Merging of the Models 4
5.4 Seismic Analysis 6
5.5 SAP2000 Results Cases 9
5.6 Analysis Cases 9
6 Assumptions 11
7 Calculations 11
8 Results and Conclusions 11
9 References 36

BY: E.O. Weiner
DATE: 6/15/06

SUBJECT: PT TLP Coupled Structural Analysis for Evaluation of Nozzle Loads

1 Objective

The objective of this analysis is to describe the effects of coupling on the nozzle loads of the TLP (Treated LAW Evaporation Process) arrangement consisting of a separator, pump, reboiler and major connecting piping. Load considered are deadweight, seismic and thermal. Nozzle loads are compared for coupled and uncoupled analysis and anchor movements are compiled. The first three analysis cases were specified in Ref. SCN, Section 8. The remainder evolved as requested by the participants of the study.

Analysis Cases

Case	Type	Pump Mount	Nozzle Flexibility	Other
8a	Uncoupled	Fixed	No	
8b	Coupled	Free EW & NS	No	
8c	Coupled	Free EW & NS	Yes	
8d	Coupled	Free EW	Yes	
8e	Uncoupled	Fixed	Yes	
8f	Coupled	Free EW	Yes	No Grayloc weights
8g	Coupled	Free EW	Yes	Removed separator top support
8h	Coupled	Free EW	Yes	Pre-RGM spectra
8i	Coupled	Free EW	Yes	NS support at top of 2nd elbow of reboiler discharge line
8j	Coupled	Fixed	Yes	8i plus pump fixed to frame
8k	Coupled	Free EW	Yes	8i plus replacement of separator discharge NS constraint with NS restraint on far end of 2nd elbow from pump inlet line.
8L	Coupled	Fixed	Yes	8k with fixed pump mount
8o	Coupled	Free EW	Yes	8i with 10.5 Kip upward load support on reboiler discharge line to represent a spring can support. Piping and vessels have 131 F temperature instead of 150 F.
8p	Coupled	Gapped	Yes	8i with 1/8" gap at west pump support point. Piping and vessels have 131 F temperature instead of 150 F
8q	Coupled	Gapped	Yes	8p with 1/16" gap instead of 1/8".
8r	Coupled	Gapped	Yes	8q with 1/32" gap.
8s	Coupled	Gapped	Yes	8r with Elev 00' spectra and 10.5 Kip upward load support on reboiler discharge line.

BY: E.O. Weiner
DATE: 6/15/06

SUBJECT: PT TLP Coupled Structural Analysis for Evaluation of Nozzle Loads

2 Inputs

Design Inputs

Item	Reference
Piping arrangement & properties	Ref SCN, Item 10c. Item includes piping isometrics with restraints, Grayloc fitting locations and weights. NS restraint at reboiler discharge was omitted per Ref. ECO
Piping content	Specific gravity 1.57
Separator model	GTSTRUDL (Ref GTS) model, from analysis of Ref A472
Reboiler model	GTSTRUDL model, from analysis of Ref A402
Pump frame	Fig 2 of Ref A603
Pump arrangement	Ref A647B
Pump weight & cg	Section 3.0 of Ref A603
Design temperatures	Frames 113 F Vessels, piping 150 F Reference 75 F
Seismic inertial loading	Ref SCN Item 10b with ISRS attachments. Damping = 3%.
Seismic drift loading	Drift of Elev 56' relative to Elev 00' is 0.06" EW, 0.23" NS, 0.03" Vertical per Ref. SCN Item 10d.
Material properties	Stainless steel Young's Modulus 28e6 psi Poisson's ratio 0.3 Coeff. Thermal Exp 9.25e-6 F^{-1} Density 0.284 lb/in^3
Nozzle flexibility for separator & reboiler	Vendor supplied. See table below.

Nozzle Stiffness Components

Component	Vessel: Nozzle:	Separator Dischg	Separator Inlet	Reboiler 24"	Reboiler 18"	Pump All
Axial	lb/in	9.39E+06	4.97E+05	7.78E+05	3.24E+06	1e9
Lateral	lb/in			1.00E+09	1.00E+09	1e9
Torsional	lb/in/rad	4.02E+09	3.27E+09	1.00E+09	1.00E+09	1e12
Outplane-rotational	lb/in/rad	2.15E+09	3.83E+07	9.95E+07	2.54E+08	1e12
Inplane-rotational	lb/in/rad	2.15E+09	2.71E+08	4.74E+08	4.52E+08	1e12

Notes
1. Unspecified lateral components set to 1e9. Rotational components given as 1e9 were set to 1e12, because there were flexible values given on the order of 1e9.
2. 24" reboiler data apply to inlet and discharge. 18" nozzle is not connected to piping.
3. Separator and reboiler components provided by vendor. Pump components are rigid per tee data of B31.3.

3 Background

Uncoupled analysis typically offers more restraint to thermal expansion than the more complex coupled analysis. Therefore, coupled analysis is expected to have lower nozzle loads.

4 Applicable Codes and Standards

ASME B31.3-2004, ASME Code for Process Piping.

5 Methodology

Models for the separator, reboiler, pump and piping were imported into SAP2000, Ref SAP, as separate models and then merged into one model.

5.1 Piping Models

Piping models were generated with an Excel VBA routine that takes keypoints and tangent intersections and produces joints and straight frame members representing straight runs and elbows with refinement. The elbows are modeled with 10° segments, and straight runs are limited to 2 ft. The data is imported into SAP2000, and the loadings, materials and sections are input graphically. Each of the five piping runs is a separate model.

Elbow flexibility (a section property) was used with the bending stiffnesses of the straight sections in the elbow and not with the torsional stiffness. The flexibility factor for the 24" OD x 0.375"T long radius elbow for both in-plane and out-of-plane is 16.27 (Ref B31.3 App D).

5.2 Vessel and Support Frame Models

The separator and reboiler vessels and their frames were provided as two GTSTRUDL models that were imported to SAP2000. The pump and frame model was developed from scratch.

5.3 Merging of the Models

The coupled model was obtained by merger of the individual models achieved by import after consistent positioning controlled by the piping arrangement. Short links between vessels and piping were added with the given nozzle stiffness properties. The merged model is shown below in an extruded view. The separator and reboiler vessels as well as the pump motor are shown as equivalent stick elements. The cross-sectional dimensions are scaled to solid cross sectional area. If they were scaled to radii of gyration, they would overwhelm the rest of the model. The XYZ coordinate triad shown in the figure gives the orientation of the SAP2000 global coordinate system that is used for reporting global results such as anchor movements.

BY: E.O. Weiner
DATE: 6/15/06

SUBJECT: PT TLP Coupled Structural Analysis for Evaluation of Nozzle Loads

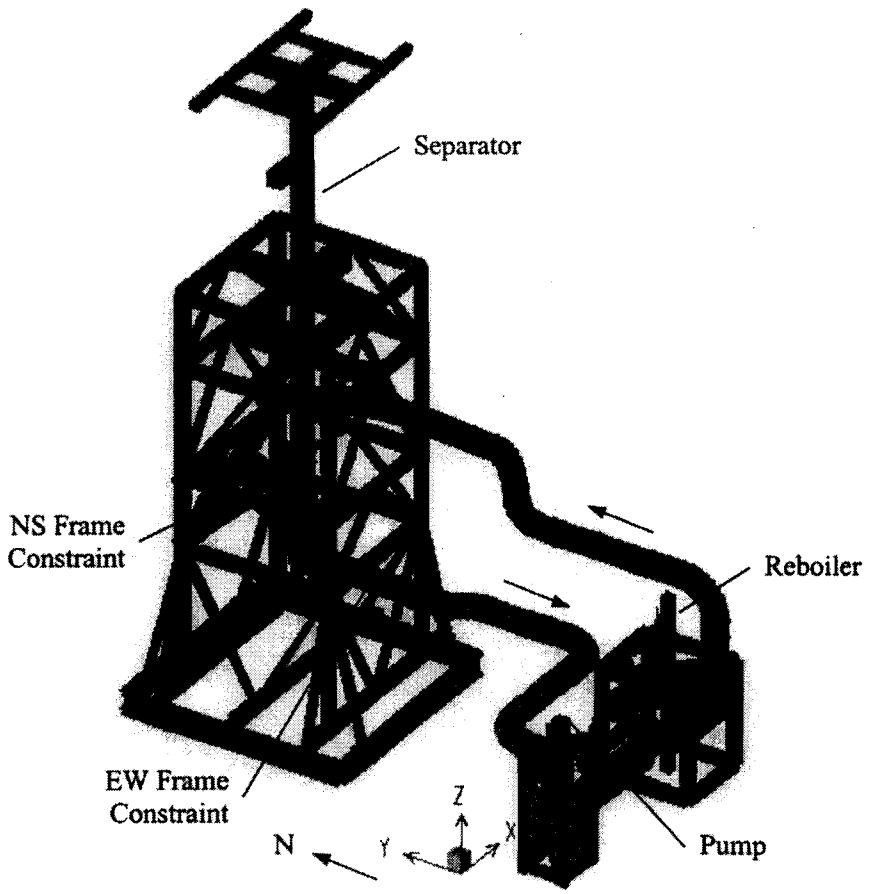

Merged Model

Two piping constraints to the separator frame are shown. They are not detailed in Ref SCN. For the constraint nearest the discharge nozzle, a weightless X-brace was placed in the north side of the frame to get a joint in line with the desired point of constraint. A TS10x10x5/8 section was then brought to the piping to provide a NS constraint. The choice of member end releases in the X-brace provides the NS support required but does not affect the inplane behavior of the north side of the frame. The EW constraint was implemented by a simple constraint condition to a joint in the center of a nearby EW beam. The frames are supported at their bases. The separator is also supported at the top. The piping restraints (to ground) are shown in the following piping restraint diagram.

BY: E.O. Weiner
DATE: 6/15/06

SUBJECT: PT TLP Coupled Structural Analysis for Evaluation of Nozzle Loads

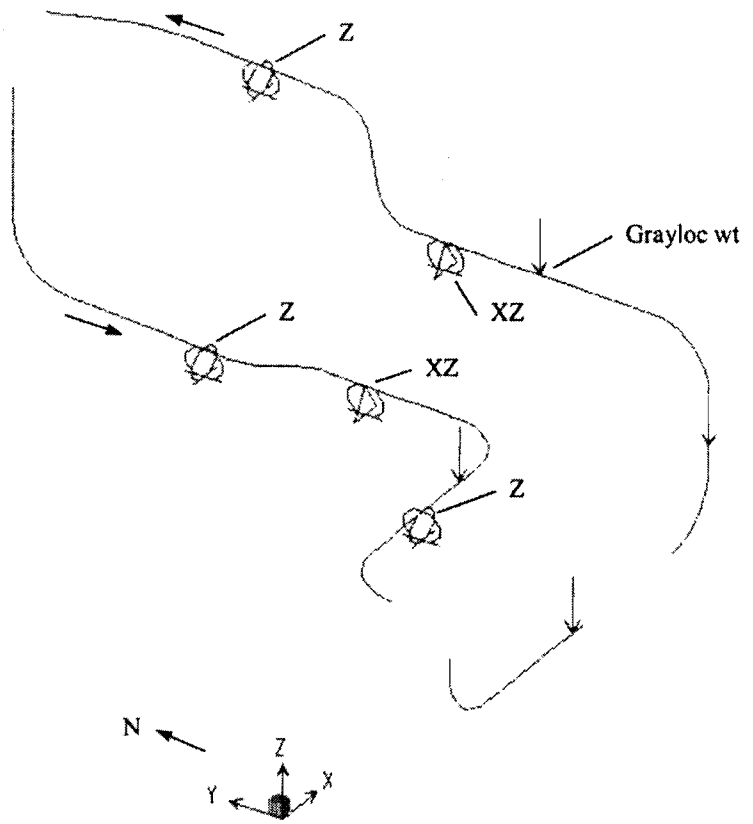

Piping Restraints and Grayloc Locations (Case 8d)

5.4 Seismic Analysis

Seismic data and parameters used in the analysis are as follows.

Seismic Parameters

Item	Description
Modal Analysis	Load Directed Ritz method
Inertia	From deadweight loading
Ritz Vectors	Linear in each direction: 8 Rotational about each axis: 3
Number of Modes	24
Damping	3%
Frequency Range	3.8 - 71 Hz (Case 8d)
Mass Participation	X = 95%, Y = 97%, Z = 92% (Case 8d)
Seismic Analysis Method	Response Spectrum Analysis
Modal Combination	CQC
Loading Directions	EW = X, NS = Y, Vert = Z
Directional Combination	SRSS.
Drift Combination	SRSS.

BY: E.O. Weiner
DATE: 6/15/06

SUBJECT: PT TLP Coupled Structural Analysis for Evaluation of Nozzle Loads

Enveloped response spectra are shown below. The RGM data is that specified in Item 10b of the SCN, but the spectrum of Fig 407 was omitted in the envelope since there is no piping restraint normal to the wall. The Pre-RGM data precedes this data and corresponds to the same figure numbers in Ref. 00005A.

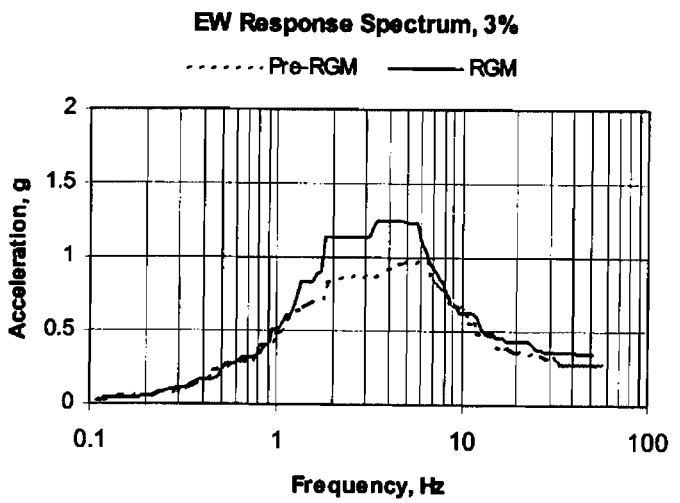

BY: E.O. Weiner
DATE: 6/15/06

SUBJECT: PT TLP Coupled Structural Analysis for Evaluation of Nozzle Loads

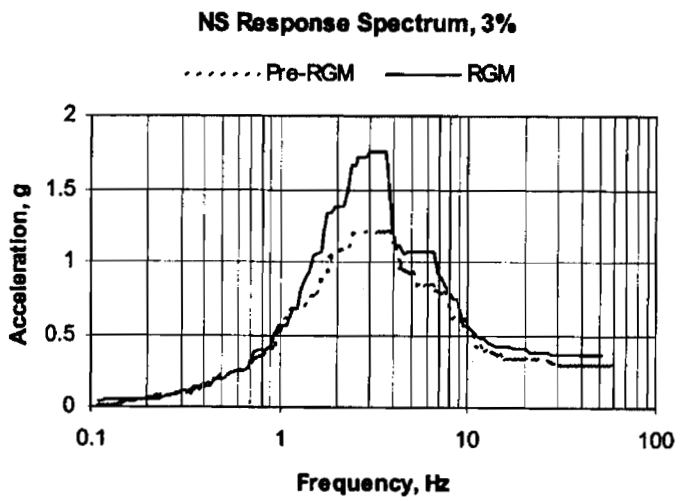

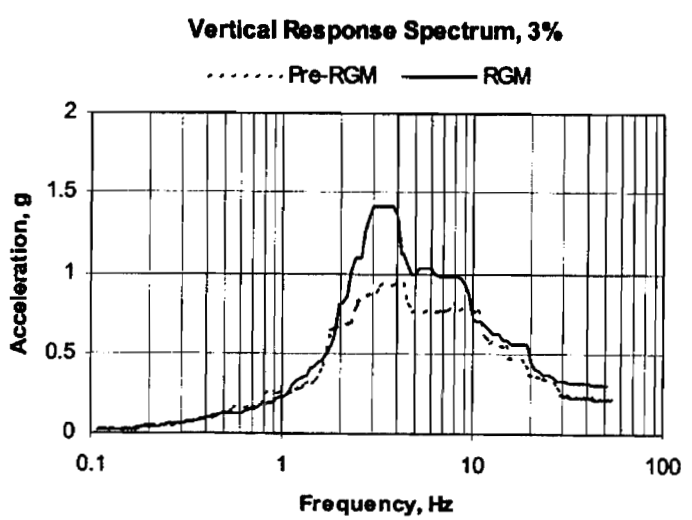

Case 8s used unenveloped RGM Elev 00 spectra that essentially leave out the Elev 56 effects. The vertical spectrum is the same as before. The horizontal spectra are those of Figures 21E and 22E of Ref. SCN, Item 10.b, and are shown below.

BY: E.O. Weiner
DATE: 6/15/06

SUBJECT: PT TLP Coupled Structural Analysis for Evaluation of Nozzle Loads

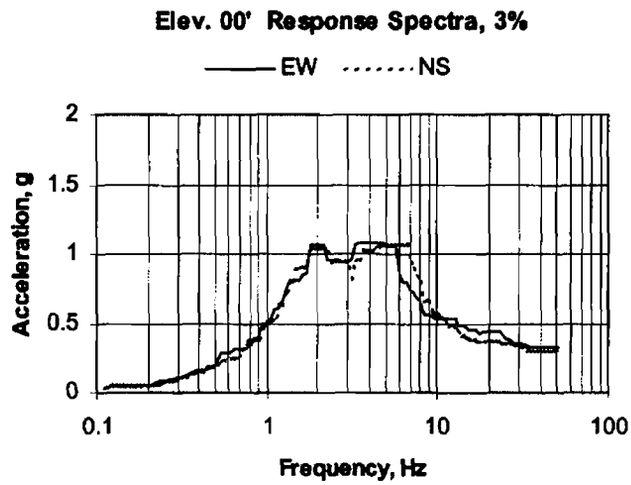

The static drift solution has the prescribed displacements at the top of the separator and 1/3 of those displacements at the piping restraints.

5.5 SAP2000 Results Cases

SAP2000 results cases (analysis cases and combinations) are as follows.

Results Cases

Case	Description
D	Deadweight
T	Thermal
MODAL	Modal analysis
RS	Response spectrum analysis
Dr	Drift
E	Seismic = SRSS of Dr and RS

5.6 Analysis Cases

Separate models were created for the various analysis cases. Each model is a modification of the merged model that was set up for Case 8d with the RGM spectra. The first three are those of Ref. SCN, and the remainders were subsequently requested by the participants of the study (J. Minichiello, E. Le, E. Ocoma & J. Julyk).

BY: E.O. Weiner
DATE: 6/15/06

SUBJECT: PT TLP Coupled Structural Analysis for Evaluation of Nozzle Loads

Analysis Case Modifications

Analysis Case	Parent Case	Model Changes Relative to Parent Case
8a	8e	Relative to the final model of 8e, the nozzle links were assigned stiff properties.
8b	8d	Nozzle links were assigned stiff properties. Pump was set free in the horizontal plane.
8c	8d	Pump was set free in the horizontal plane.
8d		Parent model
8e	8d	Nozzle links were separated from the vessels but retained with the piping, thus isolating the runs between the pump, reboiler and separator. Vessel joints previously connected to the links were left free. Analysis provides anchor movements at these vessel-side joints. The deadweight and thermal movements were input as prescribed displacements on the piping-side joints. The seismic and drift displacements at all piping supports are input as zero. The vessels and frames were deleted to avoid obscuring mass participation of the piping, and the model was reanalyzed.
8f	8d	Removed Grayloc weights. This affects deadweight and seismic inertia.
8dB	8d	Constrained frame bases and top support to single joints for reporting reactions needed to compare with Case 8g.
8g	8dB	Removed separator top support.
8h	8d	Reread spectral functions with pre-RGM data.
8i	8d	Added NS restraint at top of 2nd elbow of reboiler discharge line.
8j	8i	Fixed the pump to the frame.
8k	8i	Replaced separator discharge NS frame constraint with NS ground restraint on far end of 2nd elbow from pump inlet.
8L	8k	Fixed the pump to the frame.
8o	8i	Added 10.5 Kip upward load support on reboiler discharge line between the first and second elbow from the reboiler. This does not affect inertia for seismic loading. Piping and vessels have 131 F temperature instead of 150 F.
8p	8i	Modeled 1/8" gap in EW direction at west pump support point. The gap was modeled by fixing the pump to the frame at this support and introducing a thermal load below reference on the support arm. The gap is the free thermal expansion. A large expansion coefficient was used to avoid swamping temperature contour plots used for checking. Piping and vessels have 131 F temperature instead of 150 F.
8q	8p	Reduced 1/8" gap to 1/16".
8r	8q	Reduced gap to 1/32".
8s	8r	Used Elev 00' spectra and 10.5 Kip upward load support on reboiler discharge line.

6 Assumptions

Item	Assumption
Pump support	Various cases of pump fixity to the frame were considered, including gaps.
Nozzle stiffness	Vendor provided data, see Inputs section
Vessel & frame geometry, dimensions and weights	Base on preliminary data
Piping arrangement	Base on preliminary data
Weights of Grayloc fittings	Base on preliminary data
Piping constraints near separator discharge	Analyst provided. See Section 5.3.
SAP V&V	Dynamics features not included in Ref SAPVV.

7 Calculations

All calculations are in the SAP2000 system, Version 10. Verification and validation are reported in Ref SAPVV. It is to be noted that this reference does not cover dynamics features of the program.

8 Results and Conclusions

Nozzle loads and anchor movements from the SAP2000 analyses are shown in the following tables.

Results Tables - Description and Location

Table	Purpose	Page
Nozzle Loads	List P, V1, V2, T, M2 & M3 nozzle loads	12
Pump Support Gap Closure Loads	Gap compression loadings in west pump support arm indicate closure status	20
Mid-Elbow Loads	List P, V1, V2, T, M2 & M3 mid-elbow loads	21
RGM vs Pre-RGM Nozzle Loads	Compare RGM & Pre-RGM loads	25
Drift Nozzle Loads	Compare drift effects with total seismic	26
Frame Reactions	Show effect of top frame support on separator	26
Nozzle Displacements	List global nozzle displacements	27
Modal Participation	List mass participation of significant modes	34

BY: E.O. Weiner
DATE: 6/15/06

SUBJECT: PT TLP Coupled Structural Analysis for Evaluation of Nozzle Loads

Nozzle Loads

Case	Location		Load	Kip P	Kip V2	Kip V3	in-Kip T	in-Kip M2	in-Kip M3
Case 8a	Pump	Inlet	D	-0.03	0.81	-0.04	-4	-1	55
		Dischg	D	4.27	2.36	0.76	26	-18	25
	Reboiler	Inlet	D	2.38	-3.95	0.76	17	-75	36
		Dischg	D	-0.53	-10.81	0.56	25	8	-275
	Separator	Inlet	D	0.32	-1.01	-0.56	-70	28	39
		Dischg	D	4.87	0.03	0.10	-1	-3	2
	Pump	Inlet	E	1.89	1.27	3.89	9	-109	37
		Dischg	E	1.88	0.62	0.98	13	-21	9
	Reboiler	Inlet	E	2.98	1.73	1.78	12	-43	25
		Dischg	E	7.55	4.30	7.88	473	-159	444
	Separator	Inlet	E	5.39	5.83	15.27	176	-1659	444
		Dischg	E	2.48	1.37	6.19	5	-33	55
	Pump	Inlet	T	-3.41	-2.62	-7.52	124	34	-29
		Dischg	T	-20.91	-70.84	0.51	21	-2	-1918
	Reboiler	Inlet	T	-70.73	-21.27	0.51	21	-46	-1512
		Dischg	T	-1.59	-1.91	5.14	352	-26	9
	Separator	Inlet	T	0.59	-1.00	-5.14	54	559	-84
		Dischg	T	-1.73	3.28	-22.24	16	1288	347
Case 8b	Pump	Inlet	D	0.02	0.64	0.02	2	1	49
		Dischg	D	2.88	-0.02	0.02	0	-6	-29
	Reboiler	Inlet	D	0.00	-5.35	0.02	-5	-3	-95
		Dischg	D	-0.53	-10.69	0.45	21	11	-269
	Separator	Inlet	D	0.28	-0.95	-0.45	-75	15	42
		Dischg	D	4.88	0.02	0.45	-1	-25	1
	Pump	Inlet	E	3.45	2.19	10.04	75	-189	59
		Dischg	E	3.45	15.76	14.51	519	-318	421
	Reboiler	Inlet	E	18.21	4.23	19.59	436	-1968	225
		Dischg	E	11.67	9.72	17.15	1058	-278	704
	Separator	Inlet	E	8.51	9.06	28.16	277	-3010	692
		Dischg	E	5.07	5.53	29.27	110	-1242	544
	Pump	Inlet	T	-1.70	-2.45	-1.91	106	-86	-23
		Dischg	T	-0.15	1.91	-1.70	-19	54	62
	Reboiler	Inlet	T	1.91	-0.14	-1.70	-23	207	-43
		Dischg	T	-1.49	-1.78	4.74	323	-24	9
	Separator	Inlet	T	0.53	-0.96	-4.74	51	512	-82
		Dischg	T	-1.07	0.41	2.57	19	-94	60

Notes: P is axial, positive is tension. V3 is horizontal
V2 has an upward sense, unless P is vertical. Then V2 follows X (east)
M2 & M3 axes follow V2 and V3.
M2 has the sign reversed relative to the SAP2000 local system so all systems are right handed.
M2 reversal reverses the sign of the positive seismic amplitude.

BY: E.O. Weiner
DATE: 6/15/06

SUBJECT: PT TLP Coupled Structural Analysis for Evaluation of Nozzle Loads

Nozzle Loads

Case	Location		Load	Kip P	Kip V2	Kip V3	in-Kip T	in-Kip M2	in-Kip M3
Case 8c	Pump	Inlet	D	0.01	0.65	0.00	2	1	50
		Dischg	D	3.35	0.00	0.01	1	-6	-34
	Reboiler	Inlet	D	0.02	-4.88	0.01	-5	-1	-39
		Dischg	D	-0.62	-10.57	0.37	20	13	-247
	Separator	Inlet	D	0.21	-1.03	-0.37	-74	2	17
		Dischg	D	4.87	0.03	0.29	-1	-15	2
	Pump	Inlet	E	8.50	1.94	27.76	96	-285	50
		Dischg	E	5.23	32.66	13.88	1244	-97	880
	Reboiler	Inlet	E	35.39	6.19	22.76	762	-1432	128
		Dischg	E	10.91	12.12	35.48	2404	-298	560
	Separator	Inlet	E	12.58	8.32	11.65	237	-458	388
		Dischg	E	8.00	9.62	27.69	136	-838	934
	Pump	Inlet	T	-1.11	-2.34	-0.80	100	-89	-21
		Dischg	T	-0.10	0.80	-1.11	-61	19	30
	Reboiler	Inlet	T	0.80	-0.09	-1.11	-32	87	-19
		Dischg	T	-0.96	-0.97	1.75	103	0	13
	Separator	Inlet	T	-0.82	-0.24	-1.75	36	69	-13
		Dischg	T	-0.86	0.06	0.64	16	-14	23
Case 8d	Pump	Inlet	D	-0.05	0.65	-0.11	2	2	50
		Dischg	D	3.37	0.11	0.09	6	-6	-31
	Reboiler	Inlet	D	0.14	-4.86	0.09	-2	-6	-39
		Dischg	D	-0.62	-10.57	0.37	20	14	-247
	Separator	Inlet	D	0.21	-1.03	-0.37	-74	2	17
		Dischg	D	4.85	0.06	0.32	-1	-15	5
	Pump	Inlet	E	4.53	1.93	8.57	80	-165	47
		Dischg	E	2.68	15.59	2.21	316	-85	423
	Reboiler	Inlet	E	19.04	3.57	4.39	157	-74	91
		Dischg	E	9.60	10.77	30.61	2074	-254	497
	Separator	Inlet	E	11.03	7.29	10.12	206	-398	339
		Dischg	E	5.22	3.46	23.88	102	-763	325
	Pump	Inlet	T	-2.01	-2.32	-2.75	103	-64	-19
		Dischg	T	0.21	2.75	-0.10	-6	11	82
	Reboiler	Inlet	T	2.75	0.23	-0.10	6	6	-13
		Dischg	T	-0.96	-0.95	1.73	103	1	13
	Separator	Inlet	T	-0.81	-0.24	-1.73	35	69	-14
		Dischg	T	-1.14	0.58	1.15	20	-5	74

Notes: P is axial, positive is tension. V3 is horizontal
V2 has an upward sense, unless P is vertical. Then V2 follows X (east)
M2 & M3 axes follow V2 and V3.
M2 has the sign reversed relative to the SAP2000 local system so all systems are right handed.
M2 reversal reverses the sign of the positive seismic amplitude.

BY: E.O. Weiner
DATE: 6/15/06

SUBJECT: PT TLP Coupled Structural Analysis for Evaluation of Nozzle Loads

Nozzle Loads

Case	Location		Load	Kip P	Kip V2	Kip V3	in-Kip T	in-Kip M2	in-Kip M3
Case 8e	Pump	Inlet	D	-0.03	0.81	-0.04	-4	-1	55
		Dischg	D	3.86	1.30	0.14	11	-3	-2
	Reboiler	Inlet	D	1.32	-4.37	0.14	4	-7	1
		Dischg	D	-0.62	-10.66	0.40	18	12	-253
	Separator	Inlet	D	0.22	-1.08	-0.40	-70	4	16
		Dischg	D	4.86	0.03	0.06	-1	-2	1
	Pump	Inlet	E	2.03	1.40	3.95	9	-110	38
		Dischg	E	2.52	1.24	1.34	24	-31	30
	Reboiler	Inlet	E	1.65	1.44	1.25	22	-5	12
		Dischg	E	8.33	7.76	26.89	1837	-233	426
	Separator	Inlet	E	8.10	6.08	8.62	175	-336	285
		Dischg	E	2.27	1.27	5.94	6	-19	44
	Pump	Inlet	T	-3.37	-2.67	-7.31	125	29	-29
		Dischg	T	-6.66	-38.21	0.12	12	7	-1097
	Reboiler	Inlet	T	-38.18	-6.85	0.12	12	-4	-263
		Dischg	T	-0.99	-0.99	1.79	106	1	13
	Separator	Inlet	T	-0.84	-0.25	-1.79	37	72	-13
		Dischg	T	-1.69	2.59	-10.31	31	637	273
Case 8f	Pump	Inlet	D	-0.06	-0.22	-0.13	0	1	18
		Dischg	D	3.23	0.13	0.08	6	-3	-28
	Reboiler	Inlet	D	0.14	-2.05	0.08	0	-5	-18
		Dischg	D	-0.33	-6.09	0.25	15	5	-132
	Separator	Inlet	D	0.56	-1.32	-0.25	-56	-1	13
		Dischg	D	4.64	0.11	0.27	-4	-14	7
	Pump	Inlet	E	3.04	1.40	5.10	67	-91	26
		Dischg	E	2.18	12.57	1.38	200	-69	342
	Reboiler	Inlet	E	15.00	2.66	2.66	96	-51	72
		Dischg	E	4.74	6.48	18.02	1259	-141	257
	Separator	Inlet	E	8.38	5.03	6.65	127	-253	227
		Dischg	E	4.00	2.68	21.60	101	-776	246
	Pump	Inlet	T	-2.01	-2.32	-2.75	103	-64	-19
		Dischg	T	0.21	2.75	-0.10	-6	11	82
	Reboiler	Inlet	T	2.75	0.23	-0.10	6	6	-13
		Dischg	T	-0.96	-0.95	1.73	103	1	13
	Separator	Inlet	T	-0.81	-0.24	-1.73	35	69	-14
		Dischg	T	-1.14	0.58	1.15	20	-5	74

Notes: P is axial, positive is tension. V3 is horizontal
V2 has an upward sense, unless P is vertical. Then V2 follows X (east)
M2 & M3 axes follow V2 and V3.
M2 has the sign reversed relative to the SAP2000 local system so all systems are right handed.
M2 reversal reverses the sign of the positive seismic amplitude.

BY: E.O. Weiner
DATE: 6/15/06

SUBJECT: PT TLP Coupled Structural Analysis for Evaluation of Nozzle Loads

Nozzle Loads

Case	Location		Load	Kip P	Kip V2	Kip V3	in-Kip T	in-Kip M2	in-Kip M3
Case 8i	Pump	Inlet	D	-0.05	0.65	-0.11	2	2	50
		Dischg	D	3.37	0.11	0.09	6	-6	-31
	Reboiler	Inlet	D	0.14	-4.86	0.09	-2	-6	-39
		Dischg	D	-0.62	-10.56	0.34	17	14	-247
	Separator	Inlet	D	0.20	-1.03	-0.38	-74	3	18
		Dischg	D	4.85	0.06	0.32	-1	-15	5
	Pump	Inlet	E	4.61	1.65	8.58	80	-167	34
		Dischg	E	2.62	15.60	2.17	318	-83	424
	Reboiler	Inlet	E	19.05	3.52	4.38	157	-63	79
		Dischg	E	8.79	7.06	1.86	112	-101	499
	Separator	Inlet	E	8.33	4.33	1.71	118	-57	163
		Dischg	E	5.33	3.44	24.43	102	-771	323
	Pump	Inlet	T	-2.01	-2.32	-2.75	103	-64	-19
		Dischg	T	0.22	2.75	-0.09	-6	10	82
	Reboiler	Inlet	T	2.75	0.23	-0.09	6	6	-13
		Dischg	T	-0.91	-0.82	1.30	71	4	15
	Separator	Inlet	T	-0.89	-0.16	-1.85	32	75	-10
		Dischg	T	-1.14	0.58	1.18	20	-7	74
Case 8j	Pump	Inlet	D	-0.04	0.65	-0.10	2	1	50
		Dischg	D	3.38	0.16	0.10	8	-6	-30
	Reboiler	Inlet	D	0.18	-4.85	0.10	-1	-6	-38
		Dischg	D	-0.61	-10.56	0.34	17	14	-247
	Separator	Inlet	D	0.20	-1.03	-0.38	-74	3	18
		Dischg	D	4.85	0.05	0.32	-1	-15	4
	Pump	Inlet	E	4.08	1.20	6.81	33	-154	32
		Dischg	E	1.02	5.15	1.74	217	-62	142
	Reboiler	Inlet	E	2.53	1.61	3.43	103	-50	42
		Dischg	E	7.91	6.83	2.15	101	-94	450
	Separator	Inlet	E	7.99	4.06	1.63	108	-58	155
		Dischg	E	5.21	1.63	24.65	102	-776	135
	Pump	Inlet	T	-3.14	-1.64	-5.76	56	-31	-14
		Dischg	T	-2.24	-12.28	0.29	37	14	-321
	Reboiler	Inlet	T	-12.27	-2.30	0.29	28	-2	-66
		Dischg	T	-0.99	-0.91	1.44	79	6	14
	Separator	Inlet	T	-0.91	-0.23	-1.87	37	75	-12
		Dischg	T	-1.39	1.72	1.85	26	4	182

Notes: P is axial, positive is tension. V3 is horizontal
V2 has an upward sense, unless P is vertical. Then V2 follows X (east)
M2 & M3 axes follow V2 and V3.
M2 has the sign reversed relative to the SAP2000 local system so all systems are right handed.
M2 reversal reverses the sign of the positive seismic amplitude.

BY: E.O. Weiner
DATE: 6/15/06

SUBJECT: PT TLP Coupled Structural Analysis for Evaluation of Nozzle Loads

Nozzle Loads

Case	Location		Load	Kip P	Kip V2	Kip V3	in-Kip T	in-Kip M2	in-Kip M3
Case 8k	Pump	Inlet	D	0.01	0.65	-0.09	2	3	50
		Dischg	D	3.37	0.09	0.11	8	-6	-31
	Reboiler	Inlet	D	0.12	-4.86	0.11	-1	-6	-39
		Dischg	D	-0.61	-10.56	0.34	17	14	-247
	Separator	Inlet	D	0.20	-1.03	-0.38	-75	3	18
		Dischg	D	4.81	0.06	-0.19	-1	17	5
	Pump	Inlet	E	2.08	2.14	10.63	94	-120	43
		Dischg	E	3.20	19.55	2.16	305	-91	531
	Reboiler	Inlet	E	24.01	4.25	4.49	152	-57	92
		Dischg	E	8.87	7.19	2.24	114	-104	506
	Separator	Inlet	E	8.39	4.33	1.73	118	-43	157
		Dischg	E	3.86	4.15	9.42	102	-938	385
	Pump	Inlet	T	1.06	-2.19	-2.33	108	22	-9
		Dischg	T	0.14	2.33	0.61	70	18	71
	Reboiler	Inlet	T	2.33	0.15	0.61	45	-11	-15
		Dischg	T	-0.87	-0.80	1.28	70	4	14
	Separator	Inlet	T	-0.80	-0.18	-1.65	25	64	-12
		Dischg	T	-4.18	0.60	-12.15	17	1065	74
Case 8L	Pump	Inlet	D	0.02	0.65	-0.07	2	3	50
		Dischg	D	3.38	0.15	0.11	9	-6	-30
	Reboiler	Inlet	D	0.18	-4.85	0.11	-1	-7	-38
		Dischg	D	-0.61	-10.56	0.34	17	14	-247
	Separator	Inlet	D	0.20	-1.03	-0.38	-75	3	18
		Dischg	D	4.81	0.05	-0.18	-1	16	4
	Pump	Inlet	E	2.01	1.88	10.27	35	-134	55
		Dischg	E	1.08	5.71	1.82	254	-75	158
	Reboiler	Inlet	E	3.62	1.73	3.96	120	-56	42
		Dischg	E	7.89	6.85	2.45	103	-95	450
	Separator	Inlet	E	8.01	4.03	1.68	107	-45	149
		Dischg	E	3.84	2.07	8.08	106	-840	117
	Pump	Inlet	T	0.00	-1.55	-5.23	62	60	-5
		Dischg	T	-2.27	-12.39	0.92	104	20	-324
	Reboiler	Inlet	T	-12.38	-2.33	0.92	61	-18	-68
		Dischg	T	-0.94	-0.88	1.42	78	6	13
	Separator	Inlet	T	-0.81	-0.25	-1.66	30	64	-15
		Dischg	T	-4.37	1.73	-13.09	23	1149	180

Notes: P is axial, positive is tension. V3 is horizontal
V2 has an upward sense, unless P is vertical. Then V2 follows X (east)
M2 & M3 axes follow V2 and V3.
M2 has the sign reversed relative to the SAP2000 local system so all systems are right handed.
M2 reversal reverses the sign of the positive seismic amplitude.

BY: E.O. Weiner
DATE: 6/15/06

SUBJECT: PT TLP Coupled Structural Analysis for Evaluation of Nozzle Loads

Nozzle Loads

Case	Location		Load	Kip P	Kip V2	Kip V3	in-Kip T	in-Kip M2	in-Kip M3
Case 8o	Pump	Inlet	D	-0.10	0.66	-0.25	2	3	50
		Dischg	D	3.82	0.25	0.11	8	-6	-34
	Reboiler	Inlet	D	0.27	-4.41	0.11	-1	-7	12
		Dischg	D	-0.01	-0.49	0.36	-4	-14	12
	Separator	Inlet	D	0.96	-1.61	-0.22	-46	1	6
		Dischg	D	4.83	0.10	0.34	0	-14	9
	Pump	Inlet	E	4.61	1.65	8.58	80	-167	34
		Dischg	E	2.62	15.60	2.17	318	-83	424
	Reboiler	Inlet	E	19.05	3.52	4.38	157	-63	79
		Dischg	E	8.79	7.06	1.86	112	-101	499
	Separator	Inlet	E	8.33	4.33	1.71	118	-57	163
		Dischg	E	5.33	3.44	24.43	102	-771	323
	Pump	Inlet	T	-1.45	-2.62	-2.02	98	-45	-36
		Dischg	T	0.26	2.02	-0.05	-3	12	57
	Reboiler	Inlet	T	2.02	0.27	-0.05	9	5	2
		Dischg	T	-0.71	-0.71	1.09	61	9	-1
	Separator	Inlet	T	-0.32	-0.68	-1.28	43	57	-67
		Dischg	T	0.03	0.29	0.83	24	25	53
Case 8p	Pump	Inlet	D	-0.05	0.65	-0.11	2	2	50
		Dischg	D	3.38	0.15	0.09	6	-6	-30
	Reboiler	Inlet	D	0.17	-4.85	0.09	-2	-6	-38
		Dischg	D	-0.61	-10.56	0.34	17	14	-247
	Separator	Inlet	D	0.20	-1.03	-0.38	-74	3	18
		Dischg	D	4.85	0.06	0.32	-1	-15	5
	Pump	Inlet	E	4.25	1.18	7.20	33	-148	30
		Dischg	E	1.00	4.50	1.99	273	-75	123
	Reboiler	Inlet	E	4.00	1.53	3.98	134	-57	44
		Dischg	E	8.02	6.89	2.09	103	-95	457
	Separator	Inlet	E	8.05	4.08	1.65	109	-58	155
		Dischg	E	5.28	1.90	24.72	101	-776	173
	Pump	Inlet	T	-1.32	-2.74	-1.67	106	-49	-37
		Dischg	T	0.57	3.83	-0.11	-9	11	106
	Reboiler	Inlet	T	3.83	0.59	-0.11	6	6	9
		Dischg	T	-0.70	-0.70	1.08	60	9	-1
	Separator	Inlet	T	-0.32	-0.67	-1.28	42	57	-67
		Dischg	T	0.07	0.15	0.75	24	24	41

Notes: P is axial, positive is tension. V3 is horizontal
V2 has an upward sense, unless P is vertical. Then V2 follows X (east)
M2 & M3 axes follow V2 and V3.
M2 has the sign reversed relative to the SAP2000 local system so all systems are right handed.
M2 reversal reverses the sign of the positive seismic amplitude.

BY: E.O. Weiner
DATE: 6/15/06

SUBJECT: PT TLP Coupled Structural Analysis for Evaluation of Nozzle Loads

Nozzle Loads

Case	Location		Load	Kip P	Kip V2	Kip V3	in-Kip T	in-Kip M2	in-Kip M3
Case 8q	Pump	Inlet	D	-0.05	0.65	-0.11	2	2	50
		Dischg	D	3.38	0.15	0.09	6	-6	-30
	Reboiler	Inlet	D	0.17	-4.85	0.09	-2	-6	-38
		Dischg	D	-0.61	-10.56	0.34	17	14	-247
	Separator	Inlet	D	0.20	-1.03	-0.38	-74	3	18
		Dischg	D	4.85	0.06	0.32	-1	-15	5
	Pump	Inlet	E	4.25	1.18	7.20	33	-148	30
		Dischg	E	1.00	4.50	1.99	273	-75	123
	Reboiler	Inlet	E	4.00	1.53	3.98	134	-57	44
		Dischg	E	8.02	6.89	2.09	103	-95	457
	Separator	Inlet	E	8.05	4.08	1.65	109	-58	155
		Dischg	E	5.28	1.90	24.72	101	-776	173
	Pump	Inlet	T	-1.70	-2.51	-2.66	90	-39	-35
		Dischg	T	-0.26	-1.28	0.05	9	13	-32
	Reboiler	Inlet	T	-1.28	-0.27	0.05	15	3	-9
		Dischg	T	-0.73	-0.73	1.13	63	9	-1
	Separator	Inlet	T	-0.32	-0.69	-1.29	44	57	-68
		Dischg	T	-0.02	0.53	0.98	26	27	76
Case 8r	Pump	Inlet	D	-0.05	0.65	-0.11	2	2	50
		Dischg	D	3.38	0.15	0.09	6	-6	-30
	Reboiler	Inlet	D	0.17	-4.85	0.09	-2	-6	-38
		Dischg	D	-0.61	-10.56	0.34	17	14	-247
	Separator	Inlet	D	0.20	-1.03	-0.38	-74	3	18
		Dischg	D	4.85	0.06	0.32	-1	-15	5
	Pump	Inlet	E	4.25	1.18	7.20	33	-148	30
		Dischg	E	1.00	4.50	1.99	273	-75	123
	Reboiler	Inlet	E	4.00	1.53	3.98	134	-57	44
		Dischg	E	8.02	6.89	2.09	103	-95	457
	Separator	Inlet	E	8.05	4.08	1.65	109	-58	155
		Dischg	E	5.28	1.90	24.72	101	-776	173
	Pump	Inlet	T	-1.89	-2.39	-3.16	82	-34	-35
		Dischg	T	-0.68	-3.84	0.13	18	14	-101
	Reboiler	Inlet	T	-3.83	-0.70	0.13	20	1	-18
		Dischg	T	-0.74	-0.75	1.15	65	10	-2
	Separator	Inlet	T	-0.33	-0.70	-1.29	45	57	-68
		Dischg	T	-0.06	0.72	1.09	27	29	94

Notes: P is axial, positive is tension. V3 is horizontal
V2 has an upward sense, unless P is vertical. Then V2 follows X (east)
M2 & M3 axes follow V2 and V3.
M2 has the sign reversed relative to the SAP2000 local system so all systems are right handed.
M2 reversal reverses the sign of the positive seismic amplitude.

BY: E.O. Weiner
DATE: 6/15/06

SUBJECT: PT TLP Coupled Structural Analysis for Evaluation of Nozzle Loads

Nozzle Loads

Case	Location		Load	Kip P	Kip V2	Kip V3	in-Kip T	in-Kip M2	in-Kip M3
Case 8s	Pump	Inlet	D	-0.07	0.64	-0.16	4	2	50
		Dischg	D	3.89	0.67	0.10	7	-6	-23
	Reboiler	Inlet	D	0.70	-4.33	0.10	-1	-7	14
		Dischg	D	-0.01	-0.49	0.36	-4	-14	12
	Separator	Inlet	D	0.96	-1.61	-0.22	-46	1	6
		Dischg	D	4.84	0.07	0.32	0	-14	6
	Pump	Inlet	E	4.19	1.17	6.57	32	-143	30
		Dischg	E	0.98	4.30	1.93	255	-70	118
	Reboiler	Inlet	E	3.68	1.50	3.77	125	-54	43
		Dischg	E	7.60	6.79	2.08	98	-91	434
	Separator	Inlet	E	7.77	3.93	1.61	104	-57	152
		Dischg	E	5.24	1.77	24.71	98	-774	163
	Pump	Inlet	T	-1.89	-2.39	-3.16	82	-34	-35
		Dischg	T	-0.68	-3.84	0.13	18	14	-101
	Reboiler	Inlet	T	-3.83	-0.70	0.13	20	1	-18
		Dischg	T	-0.74	-0.75	1.15	65	10	-2
	Separator	Inlet	T	-0.33	-0.70	-1.29	45	57	-68
		Dischg	T	-0.06	0.72	1.09	27	29	94

Notes: P is axial, positive is tension. V3 is horizontal
V2 has an upward sense, unless P is vertical. Then V2 follows X (east)
M2 & M3 axes follow V2 and V3.
M2 has the sign reversed relative to the SAP2000 local system so all systems are right handed.
M2 reversal reverses the sign of the positive seismic amplitude.

BY: E.O. Weiner
DATE: 6/15/06

SUBJECT: PT TLP Coupled Structural Analysis for Evaluation of Nozzle Loads

Pump Support Gap Closure Loads

Case	in Gap	Load	Kip P	Remark
Case 8p	1/8	D	0.04	
		E	8.74	Seismic amplitude
		T	2.16	Tension, gap did not close
Case 8q	1/16	D	0.04	
		E	8.74	Seismic amplitude, exceeds thermal compression and suggests opening during seismic event
		T	-3.94	Compression, gap closed
Case 8r	1/32	D	0.04	
		E	8.74	Seismic amplitude, exceeds thermal compression and suggests opening during seismic event
		T	-6.99	Compression, gap closed
Case 8s	1/32	D	0.51	
		E	8.08	Seismic amplitude, exceeds thermal compression and suggests opening during seismic event
		T	-7.00	Compression, gap closed

BY: E.O. Weiner
DATE: 6/15/06

SUBJECT: PT TLP Coupled Structural Analysis for Evaluation of Nozzle Loads

Mid-Elbow Loads

Case	Location		Load	Kip P	Kip V2	Kip V3	in-Kip T	in-Kip M2	in-Kip M3
Case 8a	Pump	Inlet	D	-0.05	0.01	-1.74	24	8	1
	Reboiler	Dischg	D	-7.40	6.57	0.56	30	3	-8
	Separator	Dischg	D	0.99	-0.98	-0.03	-2	0	16
	Pump	Inlet	E	2.42	3.28	1.16	8	2	17
	Reboiler	Dischg	E	4.24	7.47	7.83	349	217	288
	Separator	Dischg	E	5.76	4.23	0.34	3	5	40
	Pump	Inlet	T	-7.73	2.91	2.62	96	-39	128
	Reboiler	Dischg	T	-2.48	0.21	5.14	286	-134	42
	Separator	Dischg	T	-3.60	-1.27	-3.28	39	29	79
Case 8b	Pump	Inlet	D	0.03	0.00	-1.57	26	4	-1
	Reboiler	Dischg	D	-7.32	6.49	0.45	28	5	-4
	Separator	Dischg	D	1.04	-0.96	-0.02	-1	0	16
	Pump	Inlet	E	5.53	7.97	2.10	61	28	151
	Reboiler	Dischg	E	8.09	12.45	16.97	794	465	439
	Separator	Dischg	E	11.38	7.85	5.80	75	88	73
	Pump	Inlet	T	-2.55	0.14	2.45	86	-27	118
	Reboiler	Dischg	T	-2.32	0.20	4.74	263	-122	40
	Separator	Dischg	T	-1.83	-0.61	-0.41	28	3	29
Case 8c	Pump	Inlet	D	0.01	0.01	-1.58	26	4	-1
	Reboiler	Dischg	D	-7.29	6.34	0.37	28	5	13
	Separator	Dischg	D	1.02	-0.96	-0.03	-1	0	16
	Pump	Inlet	E	26.06	13.94	1.77	87	38	383
	Reboiler	Dischg	E	11.80	10.80	35.29	1895	975	368
	Separator	Dischg	E	20.84	14.10	9.62	109	171	139
	Pump	Inlet	T	-1.35	-0.23	2.34	82	-24	98
	Reboiler	Dischg	T	-1.36	-0.01	1.75	92	-28	28
	Separator	Dischg	T	-1.34	-0.27	-0.06	24	-1	27
Case 8d	Pump	Inlet	D	-0.11	0.05	-1.58	26	4	1
	Reboiler	Dischg	D	-7.29	6.34	0.37	28	5	13
	Separator	Dischg	D	0.97	-0.99	-0.06	-1	1	17
	Pump	Inlet	E	4.48	7.30	1.80	69	29	116
	Reboiler	Dischg	E	10.34	9.64	30.44	1638	839	326
	Separator	Dischg	E	12.42	8.95	3.79	67	74	71
	Pump	Inlet	T	-3.37	0.52	2.32	85	-26	115
	Reboiler	Dischg	T	-1.35	-0.01	1.73	92	-27	28
	Separator	Dischg	T	-2.12	-0.76	-0.58	28	7	32

Notes Results are at the center of each elbow listed nearest the nozzle listed.
Forces & moments are in the SAP2000 frame local coordinate system.
The user-specified local system for elbows have the 2-axis pointing to the center of the elbow run.
M2 is out-of-plane bending. M3 is in-plane bending. Positive P is tension.

BY: E.O. Weiner
DATE: 6/15/06

SUBJECT: PT TLP Coupled Structural Analysis for Evaluation of Nozzle Loads

Mid-Elbow Loads

Case	Location		Load	Kip P	Kip V2	Kip V3	in-Kip T	in-Kip M2	in-Kip M3
Case 8e	Pump	Inlet	D	-0.05	0.01	-1.74	24	8	1
	Reboiler	Dischg	D	-7.35	6.40	0.40	26	6	10
	Separator	Dischg	D	0.98	-0.97	-0.03	-2	1	17
	Pump	Inlet	E	2.52	3.32	1.16	8	2	17
	Reboiler	Dischg	E	8.13	7.80	26.82	1439	756	285
	Separator	Dischg	E	5.78	4.24	0.32	4	6	40
	Pump	Inlet	T	-7.56	2.79	2.67	97	-39	128
	Reboiler	Dischg	T	-1.40	-0.01	1.79	95	-28	28
	Separator	Dischg	T	-3.55	-1.28	-2.59	44	36	77
Case 8f	Pump	Inlet	D	-0.13	0.05	-0.71	12	6	1
	Reboiler	Dischg	D	-3.91	3.39	0.25	17	-1	13
	Separator	Dischg	D	0.81	-0.85	-0.11	-5	2	17
	Pump	Inlet	E	2.96	3.95	1.32	55	25	96
	Reboiler	Dischg	E	6.13	4.79	17.90	995	516	183
	Separator	Dischg	E	8.83	6.56	3.12	65	65	46
	Pump	Inlet	T	-3.37	0.52	2.32	85	-26	115
	Reboiler	Dischg	T	-1.35	-0.01	1.73	92	-27	28
	Separator	Dischg	T	-2.12	-0.76	-0.58	28	7	32
Case 8i	Pump	Inlet	D	-0.11	0.05	-1.58	26	4	1
	Reboiler	Dischg	D	-7.28	6.33	0.34	26	6	13
	Separator	Dischg	D	0.97	-0.99	-0.06	-1	1	17
	Pump	Inlet	E	4.52	7.33	1.57	67	28	117
	Reboiler	Dischg	E	5.89	9.26	1.42	152	25	306
	Separator	Dischg	E	12.75	9.19	3.79	67	74	72
	Pump	Inlet	T	-3.37	0.52	2.32	85	-26	115
	Reboiler	Dischg	T	-1.22	-0.07	1.30	67	-14	26
	Separator	Dischg	T	-2.12	-0.76	-0.58	29	7	32
Case 8j	Pump	Inlet	D	-0.10	0.04	-1.58	26	4	1
	Reboiler	Dischg	D	-7.28	6.33	0.34	26	6	13
	Separator	Dischg	D	0.97	-0.99	-0.05	-1	1	17
	Pump	Inlet	E	4.37	5.85	1.10	30	12	93
	Reboiler	Dischg	E	5.64	8.43	1.70	137	26	276
	Separator	Dischg	E	12.37	8.95	2.41	66	55	67
	Pump	Inlet	T	-6.30	1.85	1.64	47	-7	149
	Reboiler	Dischg	T	-1.34	-0.06	1.44	76	-15	27
	Separator	Dischg	T	-3.02	-1.46	-1.72	34	27	39

Notes Results are at the center of each elbow listed nearest the nozzle listed.
Forces & moments are in the SAP2000 frame local coordinate system.
The user-specified local system for elbows have the 2-axis pointing to the center of the elbow run.
M2 is out-of-plane bending. M3 is in-plane bending. Positive P is tension.

BY: E.O. Weiner
DATE: 6/15/06

SUBJECT: PT TLP Coupled Structural Analysis for Evaluation of Nozzle Loads

Mid-Elbow Loads

Case	Location		Load	Kip P	Kip V2	Kip V3	in-Kip T	in-Kip M2	in-Kip M3
Case 8k	Pump	Inlet	D	-0.06	0.07	-1.58	26	4	-1
	Reboiler	Dischg	D	-7.28	6.33	0.34	26	6	13
	Separator	Dischg	D	0.83	-1.05	-0.06	-1	1	19
	Pump	Inlet	E	6.21	7.16	1.99	75	35	163
	Reboiler	Dischg	E	5.96	9.38	1.80	153	26	310
	Separator	Dischg	E	9.55	6.02	4.28	67	83	113
	Pump	Inlet	T	-0.89	2.40	2.19	94	-25	51
	Reboiler	Dischg	T	-1.18	-0.06	1.28	67	-13	25
	Separator	Dischg	T	-11.40	-5.92	-0.60	24	8	159
Case 8L	Pump	Inlet	D	-0.04	0.06	-1.58	26	4	-1
	Reboiler	Dischg	D	-7.28	6.33	0.34	26	6	13
	Separator	Dischg	D	0.84	-1.05	-0.05	-1	1	19
	Pump	Inlet	E	6.32	7.28	1.64	35	16	142
	Reboiler	Dischg	E	5.65	8.42	2.00	137	27	276
	Separator	Dischg	E	8.94	5.61	1.88	69	66	100
	Pump	Inlet	T	-3.70	3.70	1.55	58	-7	78
	Reboiler	Dischg	T	-1.29	-0.05	1.42	75	-14	26
	Separator	Dischg	T	-12.18	-6.47	-1.73	29	28	170
Case 8o	Pump	Inlet	D	-0.25	0.10	-1.59	26	4	3
	Reboiler	Dischg	D	0.30	-0.32	0.36	-9	2	13
	Separator	Dischg	D	0.92	-1.02	-0.10	0	2	17
	Pump	Inlet	E	4.52	7.33	1.57	67	28	117
	Reboiler	Dischg	E	5.89	9.26	1.42	152	25	306
	Separator	Dischg	E	12.75	9.19	3.79	67	74	72
	Pump	Inlet	T	-2.46	0.40	2.62	73	-27	83
	Reboiler	Dischg	T	-1.00	0.00	1.09	62	-9	10
	Separator	Dischg	T	-0.91	-1.14	-0.29	36	2	3
Case 8p	Pump	Inlet	D	-0.11	0.04	-1.58	26	4	1
	Reboiler	Dischg	D	-7.28	6.33	0.34	26	6	13
	Separator	Dischg	D	0.97	-0.99	-0.06	-1	1	17
	Pump	Inlet	E	4.41	6.20	1.05	30	10	102
	Reboiler	Dischg	E	5.69	8.54	1.62	139	26	280
	Separator	Dischg	E	12.77	9.20	2.67	66	57	71
	Pump	Inlet	T	-2.12	0.25	2.74	79	-29	79
	Reboiler	Dischg	T	-0.99	0.00	1.08	61	-9	10
	Separator	Dischg	T	-0.80	-1.06	-0.15	36	-1	2

Notes Results are at the center of each elbow listed nearest the nozzle listed.
Forces & moments are in the SAP2000 frame local coordinate system.
The user-specified local system for elbows have the 2-axis pointing to the center of the elbow run.
M2 is out-of-plane bending. M3 is in-plane bending. Positive P is tension.

BY: E.O. Weiner
DATE: 6/15/06

SUBJECT: PT TLP Coupled Structural Analysis for Evaluation of Nozzle Loads

Mid-Elbow Loads

Case	Location		Load	Kip P	Kip V2	Kip V3	in-Kip T	in-Kip M2	in-Kip M3
Case 8q	Pump	Inlet	D	-0.11	0.04	-1.58	26	4	1
	Reboiler	Dischg	D	-7.28	6.33	0.34	26	6	13
	Separator	Dischg	D	0.97	-0.99	-0.06	-1	1	17
	Pump	Inlet	E	4.41	6.20	1.05	30	10	102
	Reboiler	Dischg	E	5.69	8.54	1.62	139	26	280
	Separator	Dischg	E	12.77	9.20	2.67	66	57	71
	Pump	Inlet	T	-3.09	0.68	2.51	66	-23	91
	Reboiler	Dischg	T	-1.03	0.00	1.13	64	-9	10
	Separator	Dischg	T	-1.11	-1.30	-0.53	37	6	4
Case 8r	Pump	Inlet	D	-0.11	0.04	-1.58	26	4	1
	Reboiler	Dischg	D	-7.28	6.33	0.34	26	6	13
	Separator	Dischg	D	0.97	-0.99	-0.06	-1	1	17
	Pump	Inlet	E	4.41	6.20	1.05	30	10	102
	Reboiler	Dischg	E	5.69	8.54	1.62	139	26	280
	Separator	Dischg	E	12.77	9.20	2.67	66	57	71
	Pump	Inlet	T	-3.57	0.89	2.39	60	-20	97
	Reboiler	Dischg	T	-1.05	0.00	1.15	65	-9	10
	Separator	Dischg	T	-1.26	-1.41	-0.72	38	9	6
Case 8s	Pump	Inlet	D	-0.16	0.07	-1.57	27	4	2
	Reboiler	Dischg	D	0.30	-0.32	0.36	-9	3	13
	Separator	Dischg	D	0.95	-1.00	-0.07	-1	1	17
	Pump	Inlet	E	4.13	5.79	1.05	29	10	94
	Reboiler	Dischg	E	5.56	8.17	1.61	132	26	265
	Separator	Dischg	E	12.64	9.12	2.58	64	54	70
	Pump	Inlet	T	-3.57	0.89	2.39	60	-20	97
	Reboiler	Dischg	T	-1.05	0.00	1.15	65	-9	10
	Separator	Dischg	T	-1.26	-1.41	-0.72	38	9	6

Notes Results are at the center of each elbow listed nearest the nozzle listed.
Forces & moments are in the SAP2000 frame local coordinate system.
The user-specified local system for elbows have the 2-axis pointing to the center of the elbow run.
M2 is out-of-plane bending. M3 is in-plane bending. Positive P is tension.

BY: E.O. Weiner
DATE: 6/15/06

SUBJECT: PT TLP Coupled Structural Analysis for Evaluation of Nozzle Loads

RGM vs Pre-RGM Nozzle Loads

			RGM - Case 8d				Pre-RGM - Case 8h			
			Kip	Kip	in-Kip	in-Kip	Kip	Kip	in-Kip	in-Kip
Nozzle		**Load**	**P**	**V**	**T**	**M**	**P**	**V**	**T**	**M**
Pump	Inlet	D	-0.05	0.66	2	50	-0.05	0.66	2	50
	Dischg	D	3.37	0.15	6	31	3.37	0.15	6	31
Reboiler	Inlet	D	0.14	4.86	-2	39	0.14	4.86	-2	39
	Dischg	D	-0.62	10.58	20	248	-0.62	10.58	20	248
Separator	Inlet	D	0.21	1.10	-74	18	0.21	1.10	-74	18
	Dischg	D	4.85	0.32	-1	16	4.85	0.32	-1	16
Pump	Inlet	E	4.53	8.79	80	172	4.06	7.87	71	152
	Dischg	E	2.68	15.75	316	432	2.35	14.15	286	388
Reboiler	Inlet	E	19.04	5.66	157	117	17.13	5.05	142	102
	Dischg	E	9.60	32.45	2074	558	7.80	27.02	1725	455
Separator	Inlet	E	11.03	12.47	206	523	9.90	10.46	172	437
	Dischg	E	5.22	24.13	102	829	4.53	21.32	105	729
Pump	Inlet	T	-2.01	3.60	103	67	-2.01	3.60	103	67
	Dischg	T	0.21	2.75	-6	83	0.21	2.75	-6	83
Reboiler	Inlet	T	2.75	0.25	6	15	2.75	0.25	6	15
	Dischg	T	-0.96	1.97	103	13	-0.96	1.97	103	13
Separator	Inlet	T	-0.81	1.75	35	70	-0.81	1.75	35	70
	Dischg	T	-1.14	1.28	20	74	-1.14	1.28	20	74

BY: E.O. Weiner
DATE: 6/15/06

SUBJECT: PT TLP Coupled Structural Analysis for Evaluation of Nozzle Loads

Drift Nozzle Loads (Case 8d)

Nozzle		Load	Kip P	Kip V	in-Kip T	in-Kip M
Pump	Inlet	E	4.53	8.79	80	172
	Dischg	E	2.68	15.75	316	432
Reboiler	Inlet	E	19.04	5.66	157	117
	Dischg	E	9.60	32.45	2074	558
Separator	Inlet	E	11.03	12.47	206	523
	Dischg	E	5.22	24.13	102	829
Pump	Inlet	Dr	0.40	1.06	-23	10
	Dischg	Dr	-0.13	0.85	-9	24
Reboiler	Inlet	Dr	-0.85	0.15	-6	3
	Dischg	Dr	0.16	0.24	-15	6
Separator	Inlet	Dr	-0.01	0.30	10	30
	Dischg	Dr	0.12	4.94	-19	251

Frame Base Reactions

Case	Base	Loc	Load	Kip FX	Kip FY	Kip FZ	Kip-ft MX	Kip-ft MY	Kip-ft MZ
Case 8g	Pump Frame	Bottom	E	3	6	8	61	57	12
	Reboiler Frame	Bottom	E	25	38	23	280	141	125
	Separator Frame	Bottom	E	133	153	67	4220	3841	80
Case 8d	Pump Frame	Bottom	Dr	0	0	-1	2	-2	2
	Reboiler Frame	Bottom	Dr	-1	0	0	1	-2	-1
	Separator Frame	Bottom	Dr	-10	-23	0	1236	-475	-3
	Separator Frame	Top	Dr	9	24	0	0	0	-1
	Pump Frame	Bottom	E	4	7	8	66	56	12
	Reboiler Frame	Bottom	E	24	36	21	261	142	115
	Separator Frame	Bottom	E	61	100	65	2007	1011	47
	Separator Frame	Top	E	32	47	1	0	1	41

Notes: Case 8g is Case 8d with top support removed from separator.
Frame bases constrained to single joint for reactions.
Components are global.

BY: E.O. Weiner
DATE: 6/15/06

SUBJECT: PT TLP Coupled Structural Analysis for Evaluation of Nozzle Loads

Nozzle Displacements

Case	Location		Load	in U1	in U2	in U3	deg R1	deg R2	deg R3
Case 8a	Pump	Inlet	D	0.0006	0.0000	-0.0011	0.0000	-0.0012	0.0000
		Dischg	D	0.0010	0.0000	-0.0011	0.0000	-0.0012	0.0000
	Reboiler	Inlet	D	0.0000	-0.0089	-0.0126	-0.0018	0.0001	-0.0001
		Dischg	D	0.0000	-0.0090	-0.0128	-0.0018	0.0001	-0.0001
	Separator	Inlet	D	0.0000	0.0000	-0.0297	0.0000	0.0000	0.0000
		Dischg	D	0.0000	0.0000	-0.0297	0.0000	0.0000	0.0000
	Pump	Inlet	E	0.0178	0.0217	0.0006	0.0005	0.0034	0.0238
		Dischg	E	0.0093	0.0215	0.0005	0.0005	0.0034	0.0238
	Reboiler	Inlet	E	0.0420	0.0245	0.0072	0.0020	0.0071	0.0015
		Dischg	E	0.0420	0.0250	0.0072	0.0020	0.0071	0.0015
	Separator	Inlet	E	0.0710	0.1839	0.0178	0.0229	0.0120	0.0003
		Dischg	E	0.0751	0.1879	0.0167	0.0229	0.0120	0.0003
	Pump	Inlet	T	0.0006	0.0252	0.0402	0.0000	-0.0001	0.0000
		Dischg	T	0.0007	0.0000	0.0238	0.0000	-0.0001	0.0000
	Reboiler	Inlet	T	-0.0296	-0.0036	-0.0020	0.0038	0.0000	0.0000
		Dischg	T	0.0296	-0.0036	-0.0020	0.0038	0.0000	0.0000
	Separator	Inlet	T	0.0221	0.0001	0.0714	0.0000	0.0000	0.0000
		Dischg	T	0.0000	0.0000	0.0506	0.0000	0.0000	0.0000
Case 8b	Pump	Inlet	D	0.0013	-0.0090	0.0007	0.0041	-0.0005	0.0004
		Dischg	D	0.0016	-0.0083	-0.0014	0.0018	0.0001	0.0003
	Reboiler	Inlet	D	-0.0031	-0.0106	-0.0136	-0.0021	0.0046	-0.0011
		Dischg	D	-0.0031	-0.0122	-0.0212	-0.0021	0.0060	-0.0011
	Separator	Inlet	D	-0.0002	0.0002	-0.0313	-0.0001	0.0000	0.0002
		Dischg	D	-0.0002	0.0001	-0.0313	-0.0001	0.0000	0.0002
	Pump	Inlet	E	0.2014	0.4905	0.0169	0.0249	0.0244	0.2407
		Dischg	E	0.1085	0.4751	0.0028	0.0379	0.0413	0.2425
	Reboiler	Inlet	E	0.0593	0.0769	0.0127	0.0057	0.0129	0.0572
		Dischg	E	0.0592	0.0418	0.0135	0.0069	0.0138	0.0527
	Separator	Inlet	E	0.0759	0.1572	0.0175	0.0204	0.0128	0.0092
		Dischg	E	0.0806	0.1557	0.0159	0.0201	0.0128	0.0087
	Pump	Inlet	T	-0.1541	-0.0214	0.0380	-0.0029	0.0046	0.0190
		Dischg	T	-0.1404	-0.0467	0.0226	0.0014	-0.0026	0.0215
	Reboiler	Inlet	T	-0.0355	-0.0109	-0.0026	0.0041	0.0011	0.0013
		Dischg	T	0.0252	-0.0098	-0.0043	0.0049	0.0012	0.0006
	Separator	Inlet	T	0.0227	0.0113	0.0713	0.0015	0.0001	0.0013
		Dischg	T	-0.0003	0.0112	0.0499	0.0014	0.0001	0.0012

Notes
1. Displacement components are global: 1 = East 2 = North 3 = Up
2. Case 8a seismic displacements are from the frame/vessel model analysis. Seismic anchor movements were input to the piping model as zero.

BY: E.O. Weiner
DATE: 6/15/06

SUBJECT: PT TLP Coupled Structural Analysis for Evaluation of Nozzle Loads

Nozzle Displacements

Case	Location		Load	in U1	in U2	in U3	deg R1	deg R2	deg R3
Case 8c	Pump	Inlet	D	0.0018	-0.0087	0.0007	0.0042	-0.0004	0.0006
		Dischg	D	0.0021	-0.0079	-0.0015	0.0018	0.0003	0.0005
	Reboiler	Inlet	D	-0.0035	-0.0105	-0.0129	-0.0021	0.0054	-0.0011
		Dischg	D	-0.0035	-0.0120	-0.0215	-0.0020	0.0066	-0.0011
	Separator	Inlet	D	-0.0004	0.0002	-0.0314	-0.0001	0.0001	0.0001
		Dischg	D	-0.0005	0.0001	-0.0313	-0.0001	0.0001	0.0001
	Pump	Inlet	E	0.2583	2.0886	0.0180	0.0222	0.0459	0.5562
		Dischg	E	0.2316	2.0768	0.0049	0.0261	0.0807	0.6103
	Reboiler	Inlet	E	0.0776	0.0748	0.0198	0.0074	0.0210	0.0568
		Dischg	E	0.0771	0.0679	0.0189	0.0130	0.0213	0.0547
	Separator	Inlet	E	0.0842	0.1997	0.0198	0.0210	0.0138	0.0028
		Dischg	E	0.0895	0.2027	0.0183	0.0209	0.0138	0.0028
	Pump	Inlet	T	-0.1559	-0.1031	0.0375	-0.0040	0.0058	0.0332
		Dischg	T	-0.1346	-0.1293	0.0227	-0.0009	0.0000	0.0379
	Reboiler	Inlet	T	-0.0329	-0.0075	-0.0023	0.0038	0.0004	0.0013
		Dischg	T	0.0277	-0.0060	-0.0031	0.0040	0.0005	0.0010
	Separator	Inlet	T	0.0219	0.0049	0.0716	0.0006	0.0002	0.0002
		Dischg	T	-0.0011	0.0049	0.0502	0.0006	0.0002	0.0002
Case 8d	Pump	Inlet	D	0.0020	-0.0006	0.0006	0.0041	-0.0006	-0.0013
		Dischg	D	0.0014	0.0001	-0.0015	0.0017	0.0001	-0.0016
	Reboiler	Inlet	D	-0.0037	-0.0102	-0.0128	-0.0021	0.0054	-0.0013
		Dischg	D	-0.0037	-0.0120	-0.0215	-0.0020	0.0067	-0.0012
	Separator	Inlet	D	-0.0004	0.0003	-0.0314	-0.0001	0.0001	0.0001
		Dischg	D	-0.0005	0.0001	-0.0313	-0.0001	0.0001	0.0001
	Pump	Inlet	E	0.1957	0.0551	0.0057	0.0070	0.0227	0.1026
		Dischg	E	0.1292	0.0555	0.0028	0.0057	0.0411	0.0820
	Reboiler	Inlet	E	0.0534	0.0302	0.0088	0.0067	0.0133	0.0306
		Dischg	E	0.0532	0.0600	0.0168	0.0116	0.0141	0.0324
	Separator	Inlet	E	0.0751	0.1859	0.0174	0.0206	0.0127	0.0020
		Dischg	E	0.0798	0.1882	0.0160	0.0205	0.0127	0.0019
	Pump	Inlet	T	-0.1479	0.0187	0.0363	-0.0055	0.0033	-0.0031
		Dischg	T	-0.1470	-0.0083	0.0224	-0.0030	-0.0045	-0.0023
	Reboiler	Inlet	T	-0.0361	-0.0044	-0.0013	0.0038	0.0016	-0.0015
		Dischg	T	0.0246	-0.0066	-0.0036	0.0041	0.0016	-0.0016
	Separator	Inlet	T	0.0221	0.0056	0.0717	0.0007	0.0001	0.0001
		Dischg	T	-0.0009	0.0058	0.0503	0.0007	0.0001	0.0000

Notes
1. Displacement components are global: 1 = East 2 = North 3 = Up

BY: E.O. Weiner
DATE: 6/15/06

SUBJECT: PT TLP Coupled Structural Analysis for Evaluation of Nozzle Loads

Nozzle Displacements

Case	Location		Load	in U1	in U2	in U3	deg R1	deg R2	deg R3
Case 8e	Pump	Inlet	D	0.0006	0.0000	-0.0011	0.0000	-0.0012	0.0000
		Dischg	D	0.0010	0.0000	-0.0011	0.0000	-0.0012	0.0000
	Reboiler	Inlet	D	0.0000	-0.0089	-0.0126	-0.0018	0.0001	-0.0001
		Dischg	D	0.0000	-0.0090	-0.0128	-0.0018	0.0001	-0.0001
	Separator	Inlet	D	0.0000	0.0000	-0.0297	0.0000	0.0000	0.0000
		Dischg	D	0.0000	0.0000	-0.0297	0.0000	0.0000	0.0000
	Pump	Inlet	E	0.0178	0.0217	0.0006	0.0005	0.0034	0.0238
		Dischg	E	0.0093	0.0215	0.0005	0.0005	0.0034	0.0238
	Reboiler	Inlet	E	0.0420	0.0245	0.0072	0.0020	0.0071	0.0015
		Dischg	E	0.0420	0.0250	0.0072	0.0020	0.0071	0.0015
	Separator	Inlet	E	0.0710	0.1839	0.0178	0.0229	0.0120	0.0003
		Dischg	E	0.0751	0.1879	0.0167	0.0229	0.0120	0.0003
	Pump	Inlet	T	0.0006	0.0252	0.0402	0.0000	-0.0001	0.0000
		Dischg	T	0.0007	0.0000	0.0238	0.0000	-0.0001	0.0000
	Reboiler	Inlet	T	-0.0296	-0.0036	-0.0020	0.0038	0.0000	0.0000
		Dischg	T	0.0296	-0.0036	-0.0020	0.0038	0.0000	0.0000
	Separator	Inlet	T	0.0221	0.0001	0.0714	0.0000	0.0000	0.0000
		Dischg	T	0.0000	0.0000	0.0506	0.0000	0.0000	0.0000
Case 8f	Pump	Inlet	D	0.0024	-0.0008	-0.0013	0.0007	-0.0009	-0.0009
		Dischg	D	0.0021	-0.0008	-0.0016	0.0000	-0.0002	-0.0013
	Reboiler	Inlet	D	-0.0023	-0.0093	-0.0122	-0.0019	0.0035	-0.0009
		Dischg	D	-0.0023	-0.0106	-0.0177	-0.0018	0.0042	-0.0009
	Separator	Inlet	D	-0.0003	0.0001	-0.0314	-0.0001	0.0001	0.0001
		Dischg	D	-0.0003	0.0000	-0.0314	-0.0001	0.0001	0.0001
	Pump	Inlet	E	0.1477	0.0420	0.0044	0.0045	0.0197	0.0640
		Dischg	E	0.1075	0.0427	0.0025	0.0043	0.0346	0.0524
	Reboiler	Inlet	E	0.0459	0.0247	0.0066	0.0045	0.0089	0.0181
		Dischg	E	0.0458	0.0393	0.0111	0.0074	0.0093	0.0191
	Separator	Inlet	E	0.0745	0.1808	0.0171	0.0204	0.0126	0.0014
		Dischg	E	0.0791	0.1831	0.0158	0.0202	0.0126	0.0013
	Pump	Inlet	T	-0.1479	0.0187	0.0363	-0.0055	0.0033	-0.0031
		Dischg	T	-0.1470	-0.0083	0.0224	-0.0030	-0.0045	-0.0023
	Reboiler	Inlet	T	-0.0361	-0.0044	-0.0013	0.0038	0.0016	-0.0015
		Dischg	T	0.0246	-0.0066	-0.0036	0.0041	0.0016	-0.0016
	Separator	Inlet	T	0.0221	0.0056	0.0717	0.0007	0.0001	0.0001
		Dischg	T	-0.0009	0.0058	0.0503	0.0007	0.0001	0.0000

Notes
1. Displacement components are global: 1 = East 2 = North 3 = Up
2. Case 8e seismic displacements are from the frame/vessel analysis. Seismic anchor movements were input to the piping model as zero.

BY: E.O. Weiner
DATE: 6/15/06

SUBJECT: PT TLP Coupled Structural Analysis for Evaluation of Nozzle Loads

Nozzle Displacements

Case	Location		Load	in U1	in U2	in U3	deg R1	deg R2	deg R3
Case 8i	Pump	Inlet	D	0.0020	-0.0006	0.0006	0.0041	-0.0006	-0.0012
		Dischg	D	0.0014	0.0001	-0.0015	0.0017	0.0001	-0.0016
	Reboiler	Inlet	D	-0.0037	-0.0102	-0.0128	-0.0021	0.0054	-0.0012
		Dischg	D	-0.0037	-0.0120	-0.0215	-0.0020	0.0067	-0.0012
	Separator	Inlet	D	-0.0004	0.0003	-0.0314	-0.0001	0.0001	0.0001
		Dischg	D	-0.0005	0.0002	-0.0313	-0.0001	0.0001	0.0001
	Pump	Inlet	E	0.1957	0.0556	0.0052	0.0056	0.0228	0.1032
		Dischg	E	0.1288	0.0561	0.0028	0.0050	0.0411	0.0824
	Reboiler	Inlet	E	0.0525	0.0304	0.0090	0.0042	0.0107	0.0064
		Dischg	E	0.0523	0.0295	0.0114	0.0043	0.0113	0.0062
	Separator	Inlet	E	0.0749	0.1902	0.0176	0.0206	0.0127	0.0008
		Dischg	E	0.0796	0.1927	0.0164	0.0205	0.0126	0.0008
	Pump	Inlet	T	-0.1478	0.0187	0.0363	-0.0055	0.0033	-0.0030
		Dischg	T	-0.1469	-0.0083	0.0224	-0.0030	-0.0045	-0.0022
	Reboiler	Inlet	T	-0.0360	-0.0043	-0.0013	0.0037	0.0014	-0.0011
		Dischg	T	0.0247	-0.0059	-0.0034	0.0039	0.0015	-0.0011
	Separator	Inlet	T	0.0221	0.0058	0.0717	0.0007	0.0001	0.0001
		Dischg	T	-0.0009	0.0060	0.0503	0.0007	0.0001	0.0001
Case 8j	Pump	Inlet	D	0.0015	-0.0005	0.0006	0.0040	-0.0006	-0.0009
		Dischg	D	0.0012	0.0001	-0.0015	0.0016	0.0000	-0.0013
	Reboiler	Inlet	D	-0.0037	-0.0102	-0.0128	-0.0021	0.0055	-0.0013
		Dischg	D	-0.0037	-0.0120	-0.0215	-0.0020	0.0067	-0.0012
	Separator	Inlet	D	-0.0004	0.0003	-0.0314	-0.0001	0.0001	0.0001
		Dischg	D	-0.0005	0.0002	-0.0313	-0.0001	0.0001	0.0001
	Pump	Inlet	E	0.0582	0.0437	0.0036	0.0057	0.0056	0.0698
		Dischg	E	0.0257	0.0452	0.0012	0.0058	0.0111	0.0541
	Reboiler	Inlet	E	0.0391	0.0301	0.0076	0.0043	0.0086	0.0049
		Dischg	E	0.0392	0.0301	0.0103	0.0043	0.0094	0.0048
	Separator	Inlet	E	0.0752	0.1924	0.0176	0.0207	0.0127	0.0007
		Dischg	E	0.0798	0.1951	0.0164	0.0206	0.0127	0.0007
	Pump	Inlet	T	-0.0512	0.0202	0.0405	-0.0041	0.0200	0.0133
		Dischg	T	-0.0537	-0.0065	0.0258	-0.0022	0.0287	0.0096
	Reboiler	Inlet	T	-0.0126	-0.0050	-0.0069	0.0036	-0.0054	-0.0003
		Dischg	T	0.0479	-0.0055	0.0006	0.0039	-0.0051	-0.0003
	Separator	Inlet	T	0.0225	0.0068	0.0719	0.0008	-0.0001	-0.0002
		Dischg	T	-0.0004	0.0071	0.0504	0.0008	-0.0001	-0.0002

Notes
1. Displacement components are global: 1 = East 2 = North 3 = Up

BY: E.O. Weiner
DATE: 6/15/06

SUBJECT: PT TLP Coupled Structural Analysis for Evaluation of Nozzle Loads

Nozzle Displacements

Case	Location		Load	in U1	in U2	in U3	deg R1	deg R2	deg R3
Case 8k	Pump	Inlet	D	0.0020	-0.0003	0.0006	0.0041	-0.0005	-0.0009
		Dischg	D	0.0016	0.0004	-0.0015	0.0017	0.0001	-0.0013
	Reboiler	Inlet	D	-0.0036	-0.0102	-0.0128	-0.0021	0.0054	-0.0013
		Dischg	D	-0.0036	-0.0120	-0.0215	-0.0020	0.0066	-0.0012
	Separator	Inlet	D	-0.0004	0.0010	-0.0314	0.0000	0.0001	0.0001
		Dischg	D	-0.0005	0.0010	-0.0313	0.0001	0.0001	0.0001
	Pump	Inlet	E	0.2337	0.0501	0.0067	0.0068	0.0289	0.1032
		Dischg	E	0.1620	0.0504	0.0036	0.0053	0.0518	0.0831
	Reboiler	Inlet	E	0.0655	0.0311	0.0104	0.0042	0.0126	0.0070
		Dischg	E	0.0652	0.0294	0.0121	0.0043	0.0131	0.0068
	Separator	Inlet	E	0.0747	0.1391	0.0174	0.0205	0.0126	0.0010
		Dischg	E	0.0794	0.1394	0.0161	0.0204	0.0126	0.0010
	Pump	Inlet	T	-0.1570	0.0335	0.0373	-0.0039	0.0042	0.0189
		Dischg	T	-0.1442	0.0066	0.0225	-0.0019	-0.0033	0.0144
	Reboiler	Inlet	T	-0.0353	-0.0030	-0.0013	0.0036	0.0013	-0.0020
		Dischg	T	0.0254	-0.0059	-0.0033	0.0039	0.0013	-0.0020
	Separator	Inlet	T	0.0218	0.0336	0.0725	0.0065	0.0001	0.0000
		Dischg	T	-0.0013	0.0370	0.0512	0.0067	0.0001	0.0000
Case 8L	Pump	Inlet	D	0.0014	-0.0003	0.0006	0.0041	-0.0006	-0.0006
		Dischg	D	0.0012	0.0004	-0.0015	0.0016	0.0000	-0.0010
	Reboiler	Inlet	D	-0.0037	-0.0102	-0.0128	-0.0021	0.0055	-0.0013
		Dischg	D	-0.0037	-0.0120	-0.0215	-0.0020	0.0067	-0.0012
	Separator	Inlet	D	-0.0004	0.0010	-0.0314	0.0000	0.0001	0.0001
		Dischg	D	-0.0005	0.0009	-0.0313	0.0001	0.0001	0.0001
	Pump	Inlet	E	0.0765	0.0455	0.0049	0.0079	0.0072	0.0860
		Dischg	E	0.0287	0.0472	0.0012	0.0068	0.0134	0.0670
	Reboiler	Inlet	E	0.0389	0.0312	0.0081	0.0043	0.0089	0.0058
		Dischg	E	0.0390	0.0304	0.0104	0.0044	0.0097	0.0057
	Separator	Inlet	E	0.0752	0.1506	0.0173	0.0207	0.0128	0.0006
		Dischg	E	0.0799	0.1516	0.0160	0.0207	0.0128	0.0006
	Pump	Inlet	T	-0.0608	0.0346	0.0416	-0.0021	0.0207	0.0324
		Dischg	T	-0.0528	0.0082	0.0258	-0.0007	0.0292	0.0235
	Reboiler	Inlet	T	-0.0124	-0.0038	-0.0068	0.0035	-0.0054	-0.0011
		Dischg	T	0.0481	-0.0054	0.0007	0.0038	-0.0051	-0.0011
	Separator	Inlet	T	0.0222	0.0358	0.0727	0.0070	-0.0001	-0.0003
		Dischg	T	-0.0008	0.0396	0.0512	0.0072	-0.0001	-0.0003

Notes
1. Displacement components are global: 1 = East 2 = North 3 = Up

BY: E.O. Weiner
DATE: 6/15/06

SUBJECT: PT TLP Coupled Structural Analysis for Evaluation of Nozzle Loads

Nozzle Displacements

Case	Location		Load	in U1	in U2	in U3	deg R1	deg R2	deg R3
Case 8o	Pump	Inlet	D	0.0063	-0.0005	0.0006	0.0041	-0.0006	-0.0003
		Dischg	D	0.0063	0.0002	-0.0016	0.0016	0.0001	-0.0008
	Reboiler	Inlet	D	0.0005	-0.0094	-0.0153	-0.0020	-0.0020	-0.0005
		Dischg	D	0.0005	-0.0101	-0.0125	-0.0020	-0.0018	-0.0005
	Separator	Inlet	D	-0.0001	0.0001	-0.0316	-0.0001	0.0000	0.0001
		Dischg	D	-0.0001	0.0000	-0.0316	-0.0001	0.0000	0.0001
	Pump	Inlet	E	0.1957	0.0556	0.0052	0.0056	0.0228	0.1032
		Dischg	E	0.1288	0.0561	0.0028	0.0050	0.0411	0.0824
	Reboiler	Inlet	E	0.0525	0.0304	0.0090	0.0042	0.0107	0.0064
		Dischg	E	0.0523	0.0295	0.0114	0.0043	0.0113	0.0062
	Separator	Inlet	E	0.0749	0.1902	0.0176	0.0206	0.0127	0.0008
		Dischg	E	0.0796	0.1927	0.0164	0.0205	0.0126	0.0008
	Pump	Inlet	T	-0.1110	0.0142	0.0378	-0.0069	0.0041	-0.0022
		Dischg	T	-0.1106	-0.0070	0.0287	-0.0036	-0.0026	-0.0018
	Reboiler	Inlet	T	-0.0275	-0.0042	0.0055	0.0037	0.0015	-0.0009
		Dischg	T	0.0188	-0.0055	0.0033	0.0039	0.0015	-0.0009
	Separator	Inlet	T	0.0165	0.0043	0.0959	0.0006	0.0002	0.0000
		Dischg	T	-0.0011	0.0045	0.0797	0.0006	0.0002	0.0000
Case 8r	Pump	Inlet	D	0.0018	-0.0006	0.0006	0.0040	-0.0006	-0.0013
		Dischg	D	0.0012	0.0001	-0.0015	0.0016	0.0000	-0.0016
	Reboiler	Inlet	D	-0.0037	-0.0102	-0.0128	-0.0021	0.0055	-0.0012
		Dischg	D	-0.0037	-0.0120	-0.0215	-0.0020	0.0067	-0.0012
	Separator	Inlet	D	-0.0004	0.0003	-0.0314	-0.0001	0.0001	0.0001
		Dischg	D	-0.0005	0.0002	-0.0313	-0.0001	0.0001	0.0001
	Pump	Inlet	E	0.0805	0.0494	0.0030	0.0048	0.0058	0.0876
		Dischg	E	0.0380	0.0501	0.0008	0.0048	0.0105	0.0701
	Reboiler	Inlet	E	0.0390	0.0308	0.0070	0.0043	0.0081	0.0055
		Dischg	E	0.0390	0.0304	0.0103	0.0044	0.0089	0.0053
	Separator	Inlet	E	0.0752	0.1922	0.0177	0.0207	0.0127	0.0006
		Dischg	E	0.0798	0.1948	0.0165	0.0206	0.0127	0.0006
	Pump	Inlet	T	-0.0742	0.0150	0.0398	-0.0065	0.0104	0.0051
		Dischg	T	-0.0743	-0.0061	0.0305	-0.0034	0.0100	0.0038
	Reboiler	Inlet	T	-0.0184	-0.0044	0.0033	0.0036	-0.0011	-0.0006
		Dischg	T	0.0278	-0.0053	0.0049	0.0039	-0.0010	-0.0006
	Separator	Inlet	T	0.0166	0.0047	0.0960	0.0006	0.0001	-0.0001
		Dischg	T	-0.0010	0.0049	0.0797	0.0006	0.0001	-0.0001

Notes
1. Displacement components are global: 1 = East 2 = North 3 = Up

BY: E.O. Weiner
DATE: 6/15/06

SUBJECT: PT TLP Coupled Structural Analysis for Evaluation of Nozzle Loads

Nozzle Displacements

Case	Location		Load	in U1	in U2	in U3	deg R1	deg R2	deg R3
Case 8s	Pump	Inlet	D	0.0036	-0.0005	0.0004	0.0040	-0.0011	-0.0008
		Dischg	D	0.0037	0.0001	-0.0016	0.0016	-0.0009	-0.0012
	Reboiler	Inlet	D	-0.0002	-0.0094	-0.0152	-0.0020	-0.0018	-0.0005
		Dischg	D	-0.0002	-0.0101	-0.0126	-0.0020	-0.0016	-0.0005
	Separator	Inlet	D	-0.0001	0.0001	-0.0316	-0.0001	0.0001	0.0001
		Dischg	D	-0.0002	0.0000	-0.0316	-0.0001	0.0000	0.0001
	Pump	Inlet	E	0.0737	0.0467	0.0030	0.0048	0.0055	0.0814
		Dischg	E	0.0353	0.0475	0.0008	0.0047	0.0100	0.0651
	Reboiler	Inlet	E	0.0372	0.0306	0.0068	0.0043	0.0078	0.0052
		Dischg	E	0.0372	0.0304	0.0102	0.0043	0.0087	0.0051
	Separator	Inlet	E	0.0728	0.1921	0.0176	0.0207	0.0124	0.0006
		Dischg	E	0.0773	0.1947	0.0164	0.0206	0.0124	0.0006
	Pump	Inlet	T	-0.0742	0.0150	0.0398	-0.0065	0.0104	0.0051
		Dischg	T	-0.0743	-0.0061	0.0305	-0.0034	0.0100	0.0038
	Reboiler	Inlet	T	-0.0184	-0.0044	0.0033	0.0036	-0.0011	-0.0006
		Dischg	T	0.0278	-0.0053	0.0049	0.0039	-0.0010	-0.0006
	Separator	Inlet	T	0.0166	0.0047	0.0960	0.0006	0.0001	-0.0001
		Dischg	T	-0.0010	0.0049	0.0797	0.0006	0.0001	-0.0001

Notes
1. Displacement components are global: 1 = East 2 = North 3 = Up

BY: E.O. Weiner
DATE: 6/15/06

SUBJECT: PT TLP Coupled Structural Analysis for Evaluation of Nozzle Loads

Modal Participation

Case	Mode Num	Hz Freq	Mass Participation X	Y	Z	Feature
Case8a	1	6.2	0.10	0.09	0.01	Reboiler Dischg EW & NS
	2	6.8	0.07	0.28	0.01	Separator Inlet NS
	3	13.4	0.01	0.28	0.00	Pump Inlet NS
	5	20.0	0.00	0.00	0.12	Separator Inlet Vert
	6	20.7	0.11	0.01	0.01	Pump Inlet EW
	14	47.4	0.00	0.00	0.11	
	17	63.8	0.22	0.01	0.01	
	19	85.7	0.00	0.00	0.15	
	23	161.5	0.00	0.02	0.13	
	24	183.3	0.12	0.00	0.00	
	Total		0.83	0.91	0.86	
Case8d	1	3.8	0.00	0.12	0.00	Reboiler Dischg NS
	3	7.2	0.01	0.55	0.00	Separator NS
	4	7.5	0.14	0.02	0.00	Pump EW
	5	9.9	0.50	0.00	0.00	Separator EW
	8	12.7	0.01	0.19	0.01	Reboiler NS
	12	18.2	0.00	0.00	0.39	Separator Vert
	17	28.5	0.00	0.01	0.13	Reboiler Vert
	24	71.0	0.01	0.00	0.11	Pump Vert
	Total		0.95	0.97	0.92	
Case 8e	1	3.9	0.00	0.41	0.00	Reboiler Dischg NS
	2	5.9	0.16	0.00	0.02	Reboiler Dischg EW
	3	13.4	0.01	0.28	0.00	Pump Inlet NS
	4	13.6	0.10	0.00	0.00	Separator Inlet EW
	7	20.6	0.11	0.01	0.01	Pump Inlet EW
	13	38.9	0.11	0.00	0.01	Reboiler Inlet EW
	18	57.2	0.12	0.00	0.02	
	19	62.5	0.14	0.00	0.06	
	21	93.2	0.00	0.00	0.11	
	23	105.6	0.00	0.00	0.14	
	Total		0.89	0.91	0.86	
Case 8g	1	3.9	0.00	0.13	0.00	Reboiler Dischg NS
	2	5.6	0.00	0.50	0.00	Separator NS
	4	6.7	0.53	0.00	0.00	Separator EW
	11	18.3	0.00	0.00	0.38	Separator Vert
	17	31.7	0.22	0.00	0.00	Reboiler EW
	19	34.3	0.00	0.19	0.00	Reboiler NS
	24	79.2	0.00	0.00	0.28	
	Total		0.93	0.93	0.89	

Notes: Modes shown for participation > 10%.
Total participation includes modes not shown.

BY: E.O. Weiner
DATE: 6/15/06

SUBJECT: PT TLP Coupled Structural Analysis for Evaluation of Nozzle Loads

Modal Participation

Case	Mode Num	Hz Freq	Mass Participation X	Y	Z	Feature
Case 8i	2	7.2	0.01	0.59	0.00	Separator NS
	3	7.5	0.14	0.02	0.00	Pump EW
	4	9.9	0.50	0.00	0.00	Separator EW
	7	12.7	0.01	0.21	0.01	Reboiler NS
	12	18.4	0.00	0.00	0.46	Separator Vert
	17	28.6	0.00	0.00	0.18	Reboiler Vert
	Total		0.95	0.95	0.91	
Case 8j	2	7.2	0.00	0.61	0.00	Separator NS
	4	9.9	0.50	0.00	0.00	Separator EW
	5	11.5	0.21	0.01	0.00	Reboiler EW
	7	12.8	0.00	0.19	0.02	Reboiler NS
	12	18.4	0.00	0.00	0.47	Separator Vert
	17	28.7	0.00	0.00	0.11	Reboiler Vert
	Total		0.95	0.96	0.91	

Notes: Modes shown for participation > 10%.
Total participation includes modes not shown.

9 References

SCN 24590-PTF-3PN-MEVV-00012. Implementation of parametric study and high pressure steam design change.
A402 AREVA Doc Id 32-5058402-00 HEP 1 TLP Reboiler Vessel Skid Seismic Qualification
A472 AREVA Doc Id 32-5034472-03, HEP 1 FPE and TLP Separator Vessel Skids Seismic Qualification
A603 AREVA Doc Id 51-5071603-01, Recirculation Pump Support Arrangement
A647B AREVA Doc Id 51-5048647B-00, WTP 24590-QL-P0A-MEW-00001-01-00550, Rev. 00A
SAPVV 24590-WTP-VV-ST-05-004 Rev 1. SAP 2000 Verification and Validation Test Report
SAP Analysis Reference Manual, SAP2000, Integrated Software for Structural Analysis and Design, Version 10.0.1, Computer and Structure, Inc. (CSI), 1995 University Avenue, Berkeley, California 94704 USA.
GTS GTSTRUDL User Reference Manual, Rev 25, Computer Aided Structural Engineering Center, School of Civil and Environmental Engineering, Georgia Institute of Technology, Atlanta, GA 30332-0355.
B31.3 ASME B31.3-2004, ASME Code for Process Piping.
ECO E.C. Ocoma verbal instructions
00005A Calculation 24590-PTF-S0C-S15T-00005-RevA

ATTACHMENT #3

FEP & TLP Separator Recirculation Isometrics And Mid Roller Details

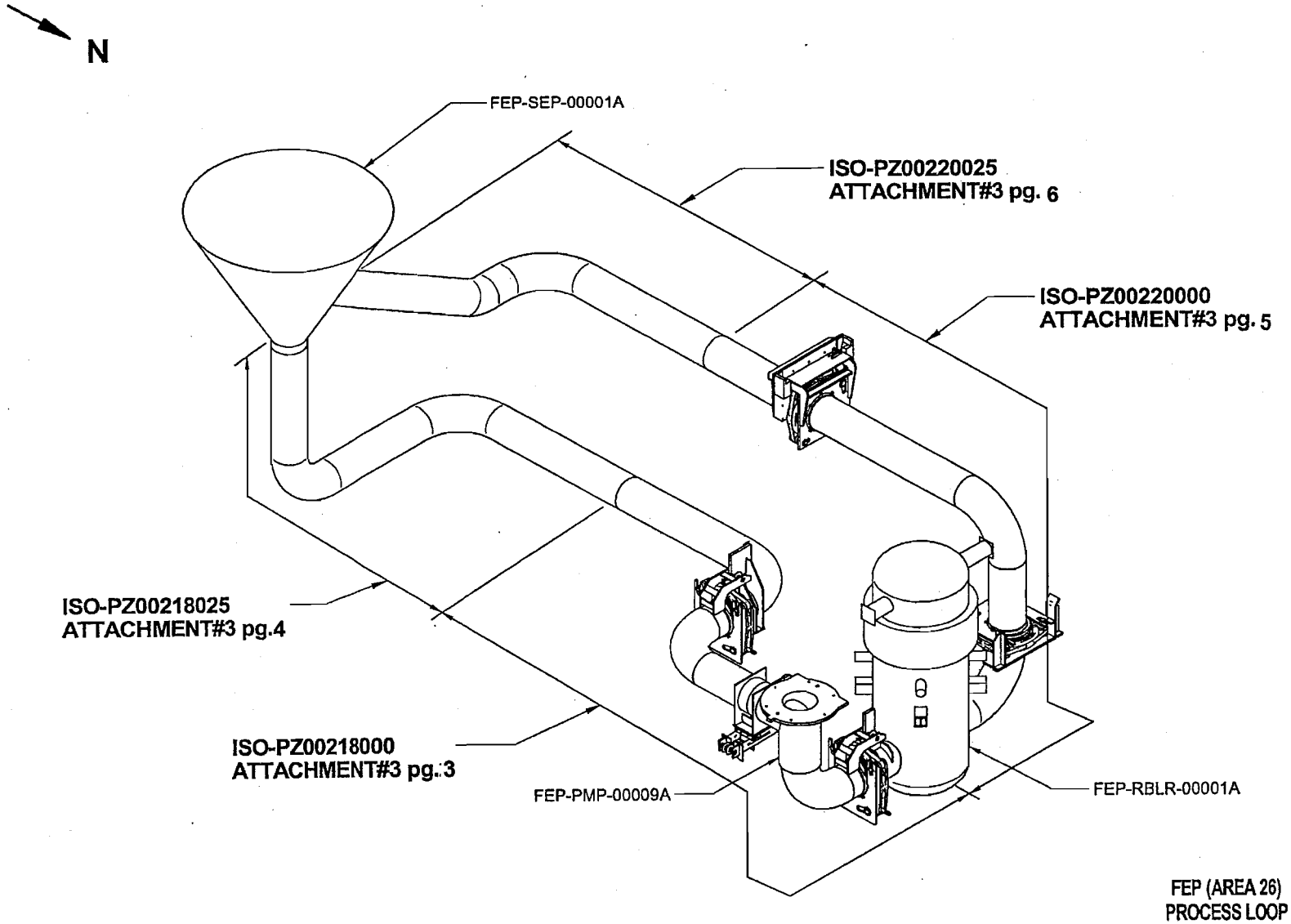

FEP (AREA 26)
PROCESS LOOP
INFORMATION ISO

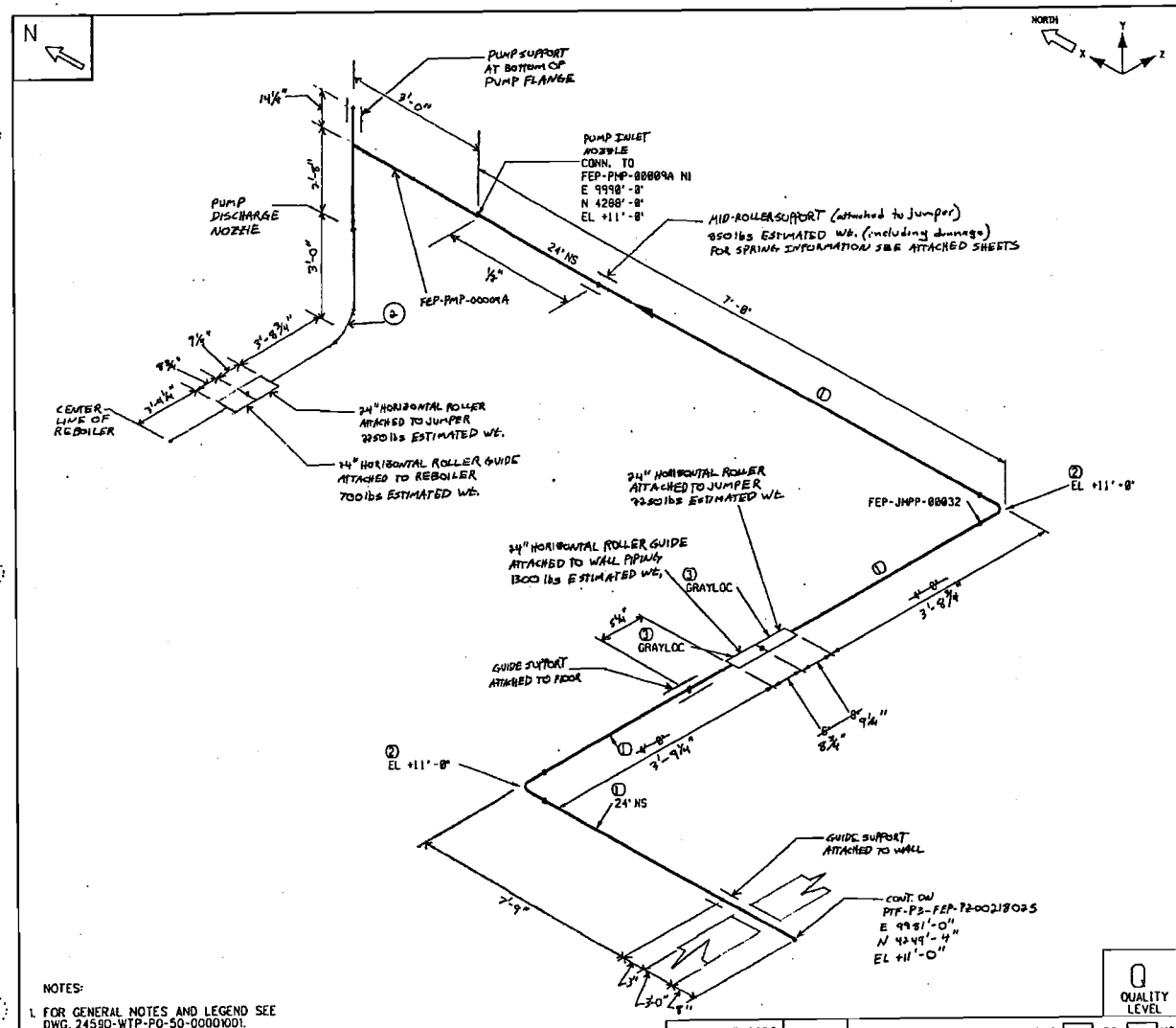

NOTES:

1. FOR GENERAL NOTES AND LEGEND SEE DWG. 24590-WTP-PO-50-00001001.

SHOP MATERIALS

PART NO	COMPONENT DESCRIPTION	N.S. (INCHES)	QTY	BECHTEL STK CODE
	PIPE			
1	PIPE, A312TP304/304L, EFW, 0.375", 88E	24	8'8"	PPPCX80L1V8C
	FITTINGS			
2	EL - 90, LR, BW, A403WP304/304L-WX, 0.375"	24	2	PFONX60L240U
3	RCC (GRAYLOC)	24	2	N/A

AREA 26

STRESS REVIEW PRINT	REV	
☐ ACCEPTED	☐ NOT ACCEPTED	
☐ ACCEPTED W/ COMMENTS	☐ SUPPORTS ADDED TO MODEL BY:	
STRESS ANALYST:	DATE:	

RIVER PROTECTION PROJECT
WASTE TREATMENT PLANT
2435 STEVENS CENTER PLACE
RICHLAND, WA 99352

CONTRACT No: DE-AC27-01RV14136

P&ID: 24590-PTF-M6-FEP-00002 | CONST. WORK AREA: 21

PRETREATMENT FACILITY ISOMETRIC

LINE No. FEP-PZ-00218-S12D-24 | PIPE SPEC: S12D

DWG No. 24590-PTF-P3-FEP-PZ00218000 | REV A

PAINT CODE	N/A	CONTENT APPLICABLE TO ALARA? ☐ YES ☐ NO
INSULATION TYPE	NI	ADR NO. REV.
INSULATION THK.	0	SEISMIC CAT. SC-1

Q QUALITY LEVEL

ISO TYPE: PT_STRESS h:\STRESS\STRESS_ISOjumper\Area_26\24590-PTF-P3-FEP-PZ00218000.DGN

LENGTH (FT.) NO DATA (FOR INFO ONLY) JSM Created: JUN-26-2006 16:21 Iso Created: JUN-26-2006 16:21 PCF File: 24590-PTF-P3-FEP-PZ00218000 PLOTTED BY: trvincen PLOT DATE: 06/28/2006 04:44:01 PM SHT. 1 OF 1

Use view 1 to place fence for plotting to not print data fields

COMPUTER GENERATED - MANUAL CHANGES NOT PERMITTED

COMPUTER GENERATED - MANUAL CHANGES NOT PERMITTED

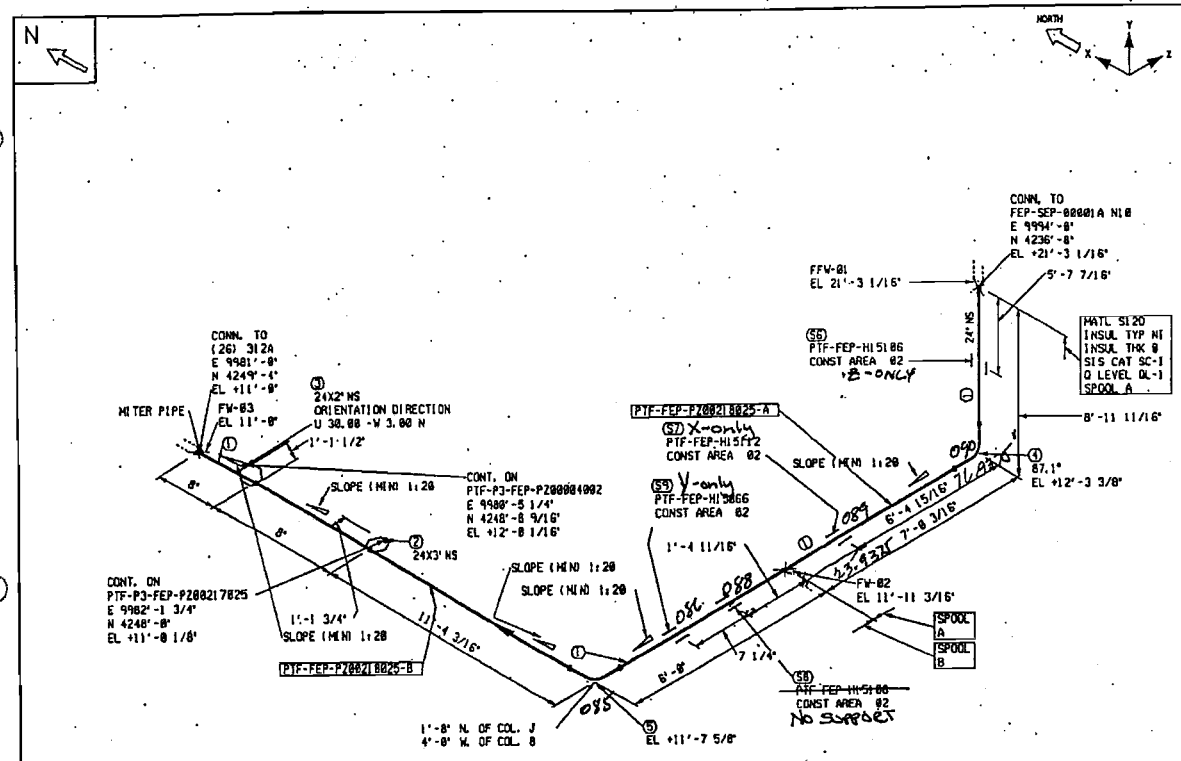

NOTES:

1. FOR GENERAL NOTES AND LEGEND SEE DWG. 24590-WTP-PO-50-00001001.

SHOP MATERIALS

PART NO	COMPONENT DESCRIPTION	N.S. (INCHES)	QTY	BECHTEL STK CODE
	PIPE			
1	PIPE, A312TP304/304L, EFW, 0.375", BBE.	24	23'0"	PPPCX60L1V6C
	FITTINGS			
2	WELDOLET, A182-F304/304L, 0.375", SCH40S	24X3	1	PFLW040L1V4A
3	WELDOLET, A182-F304/304L, 0.375", SCH80S	24X2	1	PFLW040L1XAT
4	TRIMMED ELBOW, 87.14 DEG., EL - 90, LR, BW, A403WP304/304L-WX, 0.375"	24	1	PFDNX60L24BU
5	EL - 90, LR, BW, A403WP304/304L-WX, 0.375"	24	1	PFDNX60L24BU

FIELD MATERIALS

PART NO	COMPONENT DESCRIPTION	N.S. (INCHES)	QTY	BECHTEL STK CODE
	SUPPORTS			
6	PIPE SUPT, PTF-FEP-H15106		1	
7	PIPE SUPT, REVIEWME		1	
8	PIPE SUPT, PTF-FEP-H15108		1	
9	PIPE SUPT, PTF-FEP-H15066		1	

ECO 10/17/05

STRESS REVIEW PRINT	REV
☐ ACCEPTED	☐ NOT ACCEPTED
☐ ACCEPTED W/ COMMENTS	☐ SUPPORTS ADDED TO MODEL BY:
STRESS ANALYST:	DATE:

BECHTEL

RIVER PROTECTION PROJECT
WASTE TREATMENT PLANT
2435 STEVENS CENTER PLACE
RICHLAND, WA 99352

CONTRACT No: DE-AC27-01RV14136

P&ID: 24590-PTF-M6-FEP-00002 | CONST. WORK AREA: 02

PRETREATMENT FACILITY ISOMETRIC

LINE No. FEP-PZ-00218-S120-24 | PIPE SPEC: S120

DWG No. 24590-PTF-P3-FEP-PZ00218025 | REV A

PAINT CODE	NA	CONTENT APPLICABLE TO ALARA? ☐ YES ☐ NO
INSULATION TYPE	NI	ADR NO. REV.
INSULATION THK.	0	QUALITY LEVEL QL-1 SEISMIC CAT. SC-1

LENGTH (FT.) 36.94 (FOR INFO ONLY) JSW Created: OCT-14-2005 16:40 Iso Created: OCT-14-2005 16:41 PCF File: 24590-PTF-P3-FEP-PZ00218025 PLOTTED BY: ecocoma PLOT DATE: 10/17/2005 10:48:22 AM SHT. 1 OF 1

ISO TYPE: PT_ASTRESS C:\Documents and Settings\ecocoma\Local Settings\Temporary Internet Files\OLK3\FEP-PZ00218025-101505.DGN

Use view 1 to place fence for plotting to not print data fields

AREA 26

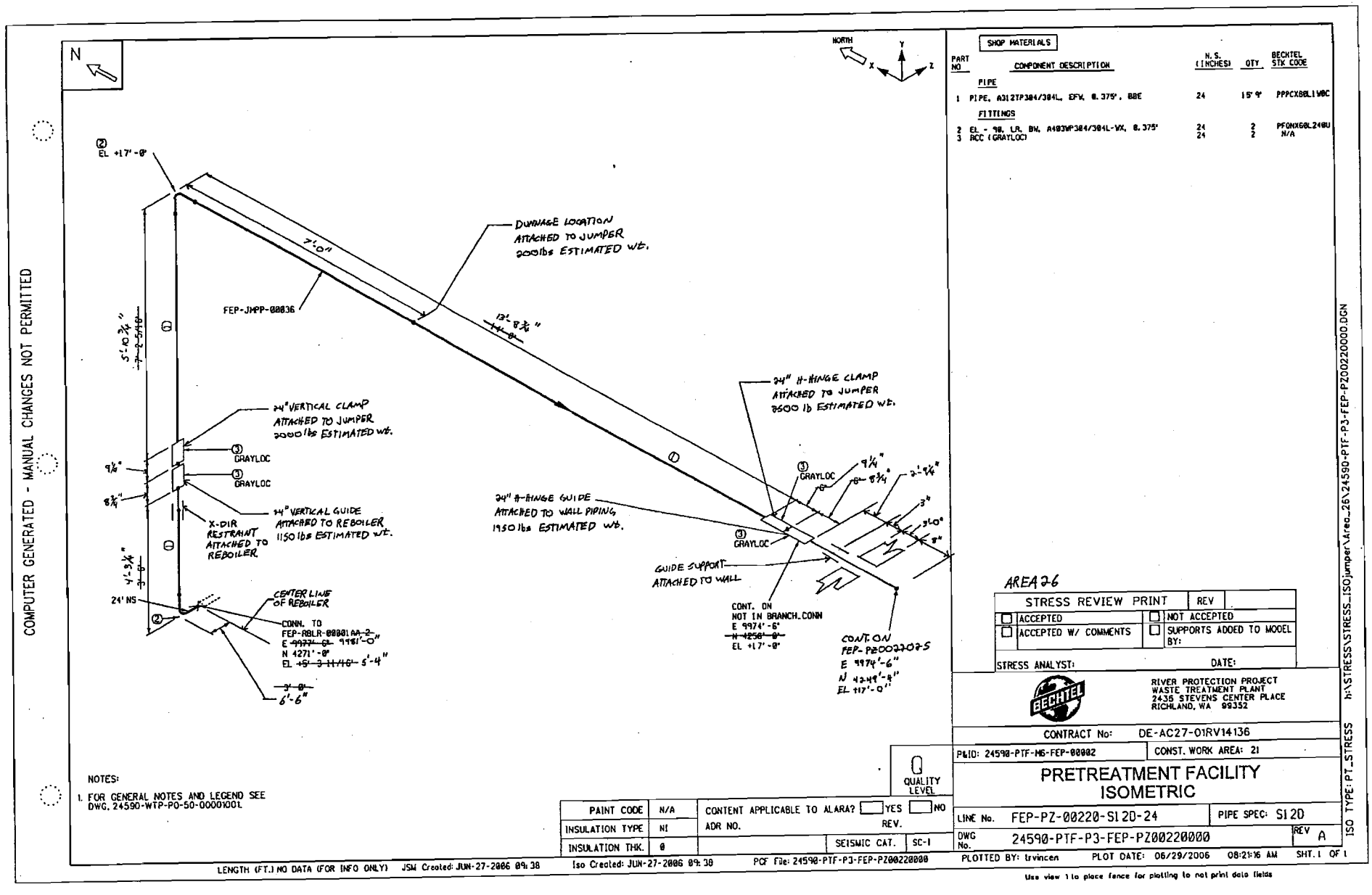

SHOP MATERIALS

PART NO	COMPONENT DESCRIPTION	N.S. (INCHES)	QTY	BECHTEL STK CODE
	PIPE			
1	PIPE, A312TP304/304L, EFW, 0.375", BBE	24	15'-9"	PPPCX80L1V0C
	FITTINGS			
2	EL - 90, LR, BW, A403WP304/304L-WX, 0.375"	24	2	PFONXG0L240U
3	ACC (GRAYLOC)	24	2	N/A

NOTES:

1. FOR GENERAL NOTES AND LEGEND SEE DWG. 24590-WTP-PO-50-00001001.

AREA 26

STRESS REVIEW PRINT	REV
☐ ACCEPTED	☐ NOT ACCEPTED
☐ ACCEPTED W/ COMMENTS	☐ SUPPORTS ADDED TO MODEL BY:
STRESS ANALYST:	DATE:

RIVER PROTECTION PROJECT
WASTE TREATMENT PLANT
2435 STEVENS CENTER PLACE
RICHLAND, WA 99352

CONTRACT No: DE-AC27-01RV14136

P&ID: 24590-PTF-M6-FEP-00002 | CONST. WORK AREA: 21

PRETREATMENT FACILITY ISOMETRIC

LINE No. FEP-PZ-00220-S12D-24 | PIPE SPEC: S12D

DWG No. 24590-PTF-P3-FEP-PZ00220000 | REV A

QUALITY LEVEL: Q

PAINT CODE	N/A	CONTENT APPLICABLE TO ALARA? ☐ YES ☐ NO	
INSULATION TYPE	NI	ADR NO.	REV.
INSULATION THK.	0	SEISMIC CAT.	SC-I

ISO TYPE: PT_STRESS h:\STRESS\STRESS_ISOjumper\Area_26\24590-PTF-P3-FEP-PZ00220000.DGN

LENGTH (FT.) NO DATA (FOR INFO ONLY) JSW Created: JUN-27-2006 09:38 Iso Created: JUN-27-2006 09:38 PCF File: 24590-PTF-P3-FEP-PZ00220000 PLOTTED BY: trvincen PLOT DATE: 06/29/2006 08:21:16 AM SHT. 1 OF 1

Use view 1 to place fence for plotting to not print data fields

COMPUTER GENERATED - MANUAL CHANGES NOT PERMITTED

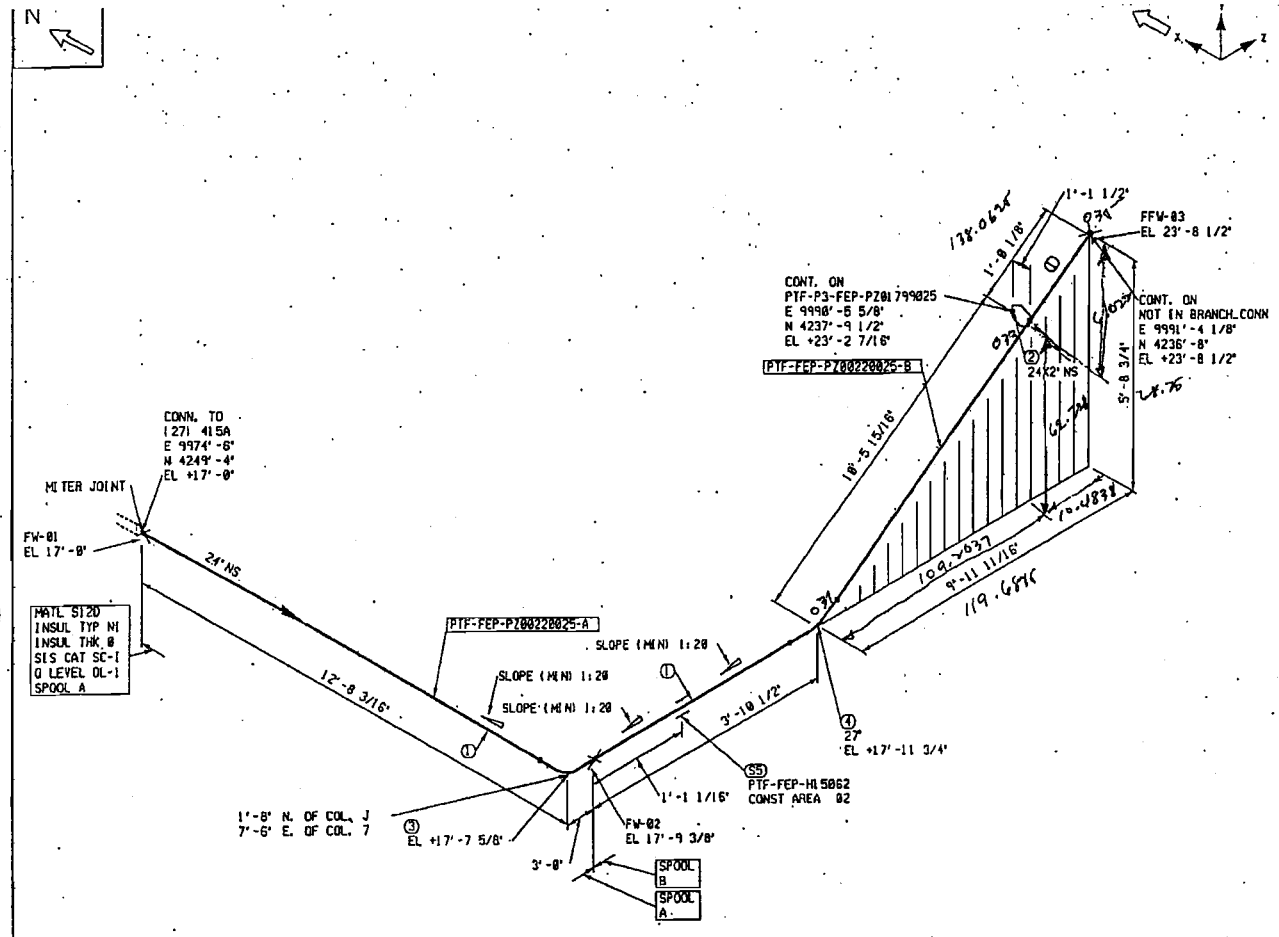

NOTES:

1. FOR GENERAL NOTES AND LEGEND SEE DWG. 24590-WTP-PO-50-00001001.

PAINT CODE	NA	CONTENT APPLICABLE TO ALARA?	YES	NO	
INSULATION TYPE	NI	ADR NO.		REV.	
INSULATION THK.	0	QUALITY LEVEL	QL-1	SEISMIC CAT.	SC-I

LENGTH (FT.) 32.19 (FOR INFO ONLY) JSM Created: FEB-08-2005 07:24 Iso Created: FEB-08-2005 07:25 PCF File: 24590-PTF-P3-FEP-PZ00220025

SHOP MATERIALS

PART NO	COMPONENT DESCRIPTION	N.S. (INCHES)	QTY	BECHTEL STK CODE
	PIPE			
1	PIPE, A312TP304/304L, EFW, 0.375", BBE	24	23'8"	PPPCX08LIWBC
	FITTINGS			
2	WELDOLET, A182-F304/304L, 0.375", SCH80S	24X2	1	PFLW040LIXAT
3	EL - 90, LR, BW, A403WP304/304L-WX, 0.375"	24	1	PFONX08L240U
4	TRIMMED ELBOW, 27.82 DEG., EL - 45, LR, BW, A403WP304/304L-WX, 0.375"	24	1	PFRNX08L230U

FIELD MATERIALS

PART NO	COMPONENT DESCRIPTION	N.S. (INCHES)	QTY	BECHTEL STK CODE
	SUPPORTS			
5	PIPE SUPT, PTF-FEP-H15062			

031-033
Δ= 29.8796"
y= 70-0 7/16 (SIN θ)
= 67.7288"
z= 10-0 5/16 (COS θ)
= 109.2037"

ECO 10/17/05
2-9-05

STRESS REVIEW PRINT	REV
☐ ACCEPTED	☐ NOT ACCEPTED
☐ ACCEPTED W/ COMMENTS	☐ SUPPORTS ADDED TO MODEL BY:
STRESS ANALYST:	DATE:

RIVER PROTECTION PROJECT
WASTE TREATMENT PLANT
2435 STEVENS CENTER PLACE
RICHLAND, WA 99352

CONTRACT No: DE-AC27-01RV14136

P&ID: 24590-PTF-MG-FEP-00002 CONST. WORK AREA: 02

PRETREATMENT FACILITY ISOMETRIC

LINE No. FEP-PZ-00220-S12D-24 PIPE SPEC: S12D

DWG No. 24590-PTF-P3-FEP-PZ00220025 REV A

ISO TYPE: PT_xSTRESS C:\iso\24590-PTF-P3-FEP-PZ00220025.DGN

PLOTTED BY: ykim PLOT DATE: 02/08/2005 07:27:53 AM SHT. 1 OF 1

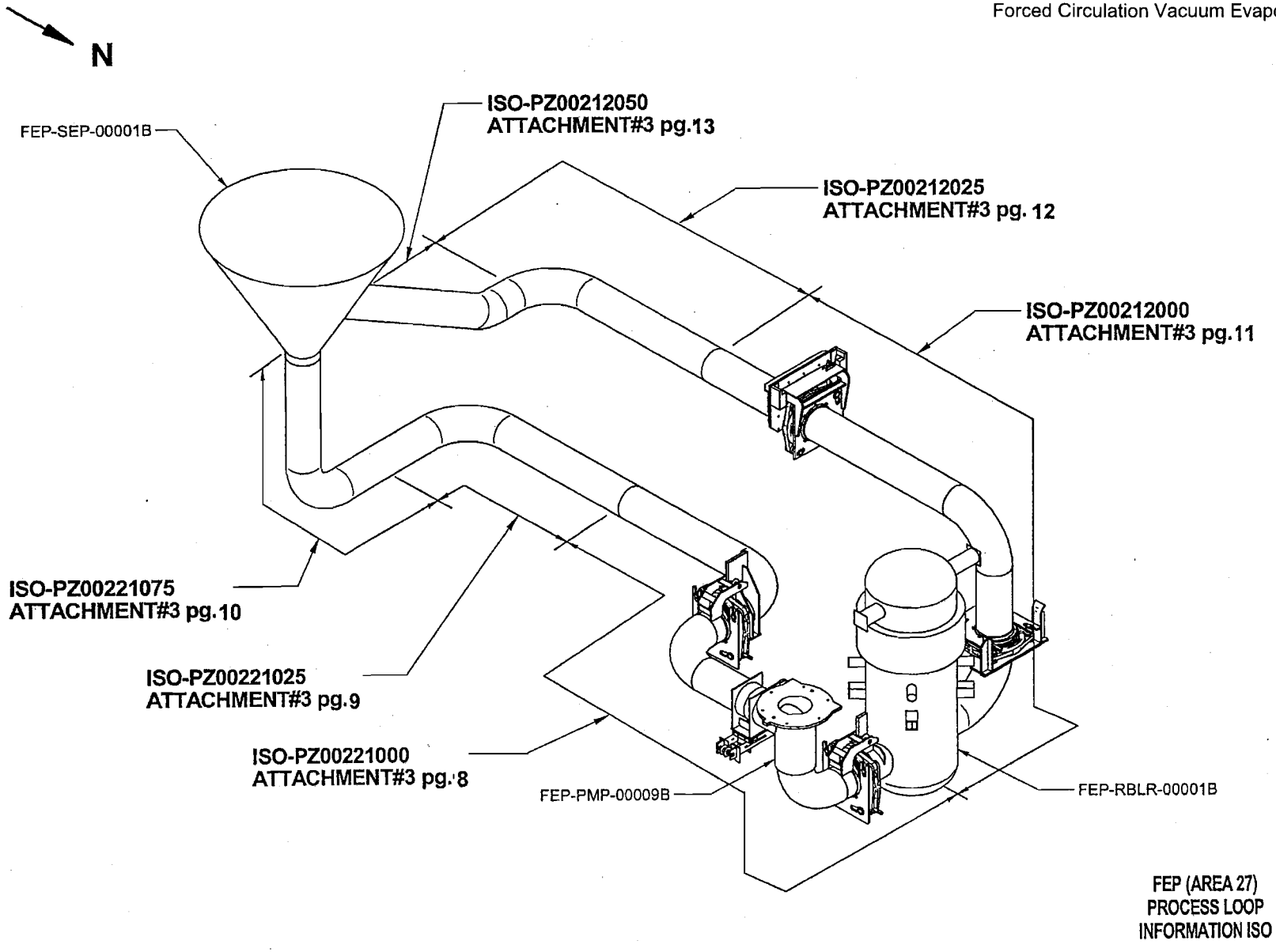

FEP (AREA 27)
PROCESS LOOP
INFORMATION ISO

COMPUTER GENERATED - MANUAL CHANGES NOT PERMITTED

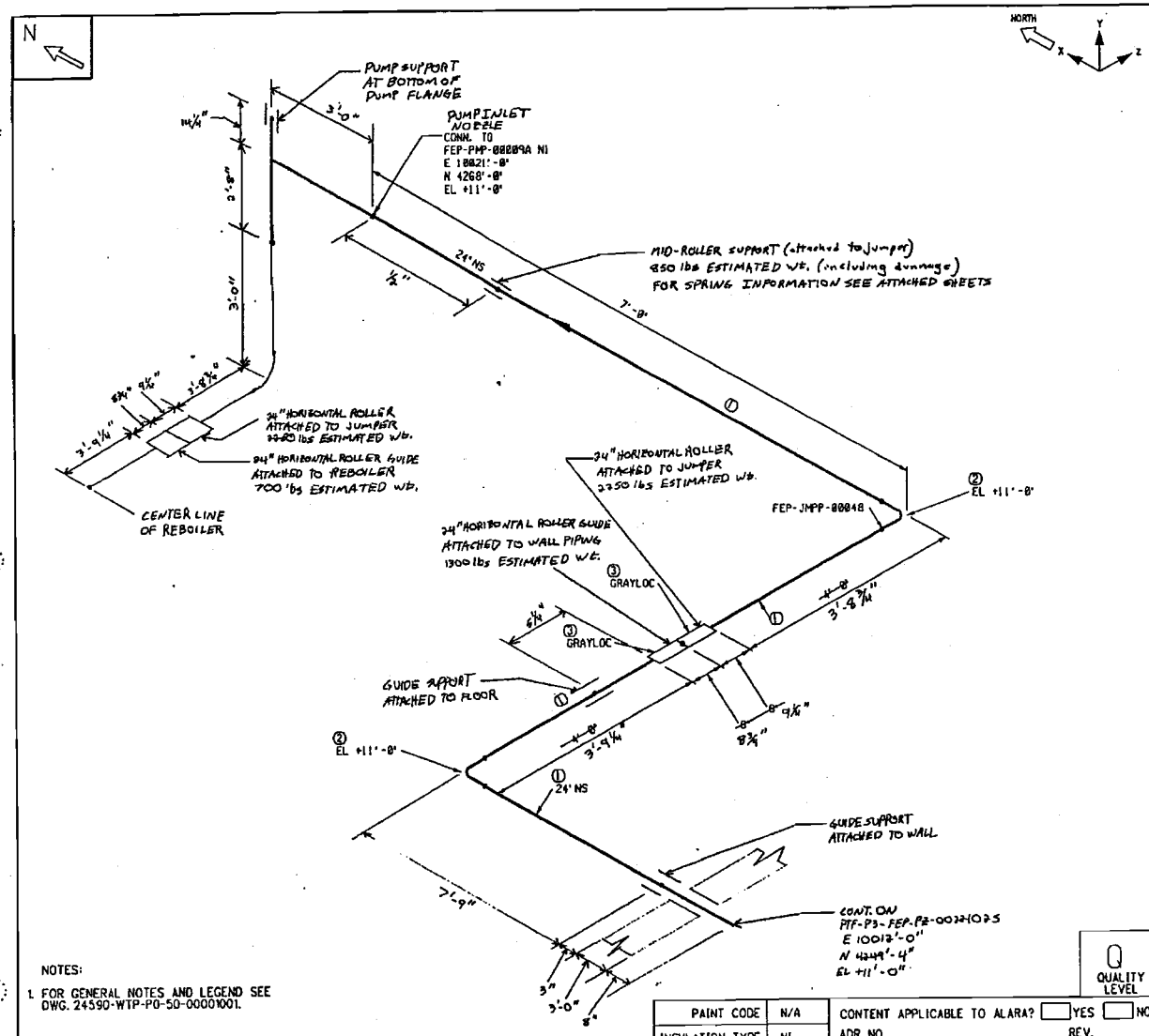

NOTES:

1. FOR GENERAL NOTES AND LEGEND SEE DWG. 24590-WTP-PO-50-00001001.

SHOP MATERIALS

PART NO	COMPONENT DESCRIPTION	N.S. (INCHES)	QTY	BECHTEL STK CODE
	PIPE			
1	PIPE, A312TP304/304L, EFW, 0.375", BBE	24	8'8"	PPPCX8BL1V8C
	FITTINGS			
2	EL - 90, LR, BW, A403WP304/304L-WX, 0.375"	24	2	PFONXG0L240U
3	RCC (GRAYLOC)	24	2	N/A

AREA 27

STRESS REVIEW PRINT	REV	
☐ ACCEPTED	☐ NOT ACCEPTED	
☐ ACCEPTED W/ COMMENTS	☐ SUPPORTS ADDED TO MODEL BY:	
STRESS ANALYST:	DATE:	

RIVER PROTECTION PROJECT
WASTE TREATMENT PLANT
2435 STEVENS CENTER PLACE
RICHLAND, WA 99352

CONTRACT No: DE-AC27-01RV14136

P&ID: 24590-PTF-M6-FEP-00004 | CONST. WORK AREA: 21

PRETREATMENT FACILITY ISOMETRIC

LINE No. FEP-PZ-00221-S12D-24 | PIPE SPEC: S12D

DWG No. 24590-PTF-P3-FEP-PZ00221000 | REV A

PAINT CODE	N/A	CONTENT APPLICABLE TO ALARA? ☐ YES ☐ NO	
INSULATION TYPE	NI	ADR NO.	REV.
INSULATION THK.	0	SEISMIC CAT.	SC-I

Q QUALITY LEVEL

ISO TYPE: PT_STRESS c:\iso\24590-PTF-P3-FEP-PZ00221000.DGN

LENGTH (FT.) NO DATA (FOR INFO ONLY) JSN Created: JUN-29-2006 15:14 Iso Created: JUN-29-2006 15:15 PCF File: 24590-PTF-P3-FEP-PZ00221000 PLOTTED BY: trvincen PLOT DATE: 06/29/2006 03:44:50 PM SHT. 1 OF 1

Use view 1 to place fence for plotting to not print data fields

COMPUTER GENERATED - MANUAL CHANGES NOT PERMITTED

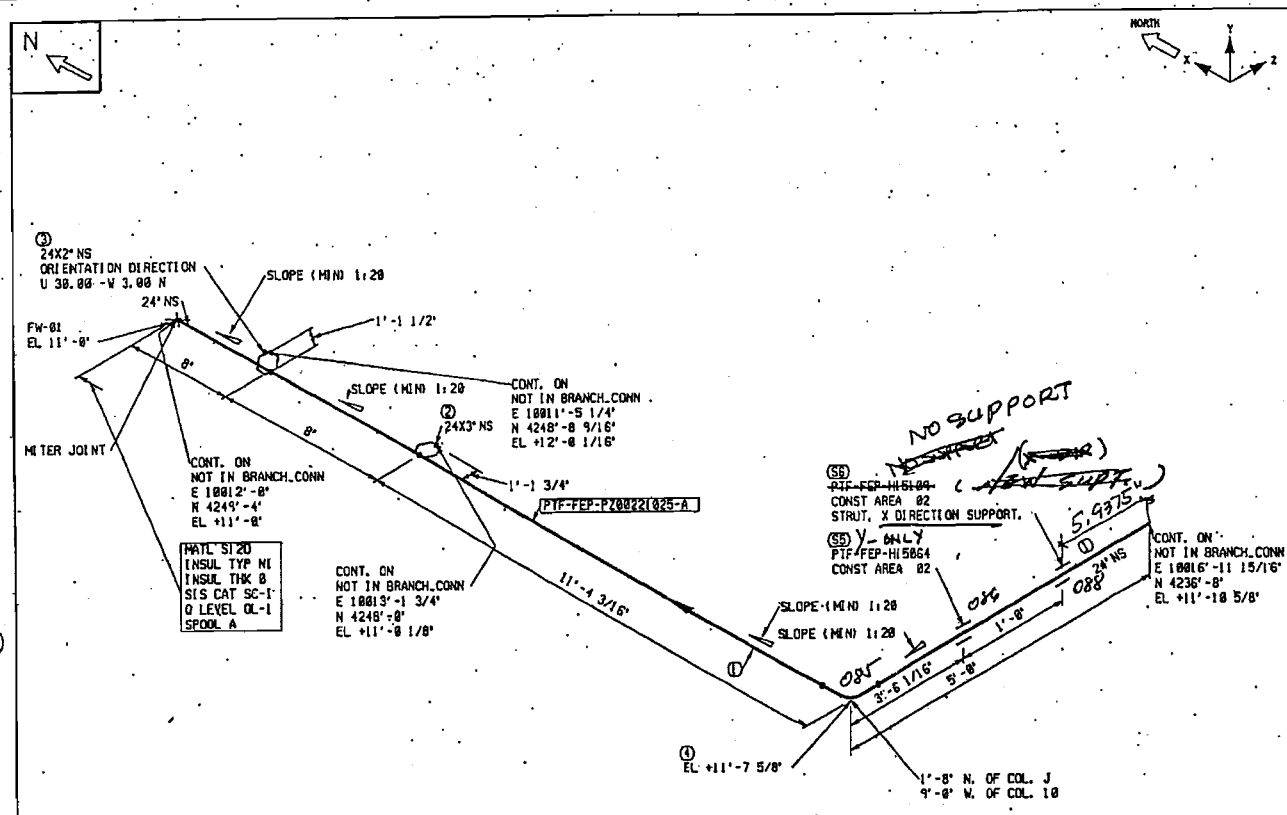

NOTES:

1. FOR GENERAL NOTES AND LEGEND SEE DWG. 24590-WTP-PO-50-00001001.

PAINT CODE	NA	CONTENT APPLICABLE TO ALARA? ☐ YES ☐ NO			
INSULATION TYPE	NI	ADR NO.	REV.		
INSULATION THK.	0	QUALITY LEVEL	QL-1	SEISMIC CAT.	SC-1.

SHOP MATERIALS

PART NO	COMPONENT DESCRIPTION	N.S. (INCHES)	QTY	BECHTEL STK CODE
	PIPE			
1	PIPE, A312TP304/304L, EFW, 0.375", BBE	24	11'9"	PPPCX80L1W8C
	FITTINGS			
2	WELDOLET, A182-F304/304L, 0.375", SCH40S	24X3	1	PFLW040L1WWA
3	WELDOLET, A182-F304/304L, 0.375", SCH80S	24X2	1	PFLW040L1XAT
4	EL - 90, LR, BW, A403WP304/304L-WX, 0.375"	24	1	PFQNX90L240U

FIELD MATERIALS

PART NO	COMPONENT DESCRIPTION	N.S. (INCHES)	QTY	BECHTEL STK CODE
	SUPPORTS			
5	PIPE SUPT, PTF-FEP-H15064		1	
6	PIPE SUPT, PTF-FEP-H15109		1	

STRESS REVIEW PRINT		REV	
☐ ACCEPTED		☐ NOT ACCEPTED	
☐ ACCEPTED W/ COMMENTS		☐ SUPPORTS ADDED TO MODEL BY:	
STRESS ANALYST:		DATE:	

BECHTEL

RIVER PROTECTION PROJECT
WASTE TREATMENT PLANT
2435 STEVENS CENTER PLACE
RICHLAND, WA 99352

CONTRACT No: DE-AC27-01RV14136

P&ID: 24590-PTF-M6-FEP-00004 | CONST. WORK AREA: 02

PRETREATMENT FACILITY
ISOMETRIC

LINE No. FEP-PZ-00221-S120-24 | PIPE SPEC: S120

DWG No. 24590-PTF-P3-FEP-PZ00221025 | REV: A

ISO TYPE: PT_xSTRESS C:\iso\tmp_conn_check.DGN

LENGTH (FT) 19.95 (FOR INFO ONLY) ISM Created: OCT-06-2005 16:19 Iso Created: OCT-06-2005 16:19 PCF File: TMP_CONN_CHECK PLOTTED BY: vbim PLOT DATE: 10/06/2005 04:20:19 PM SHT 1 OF 1

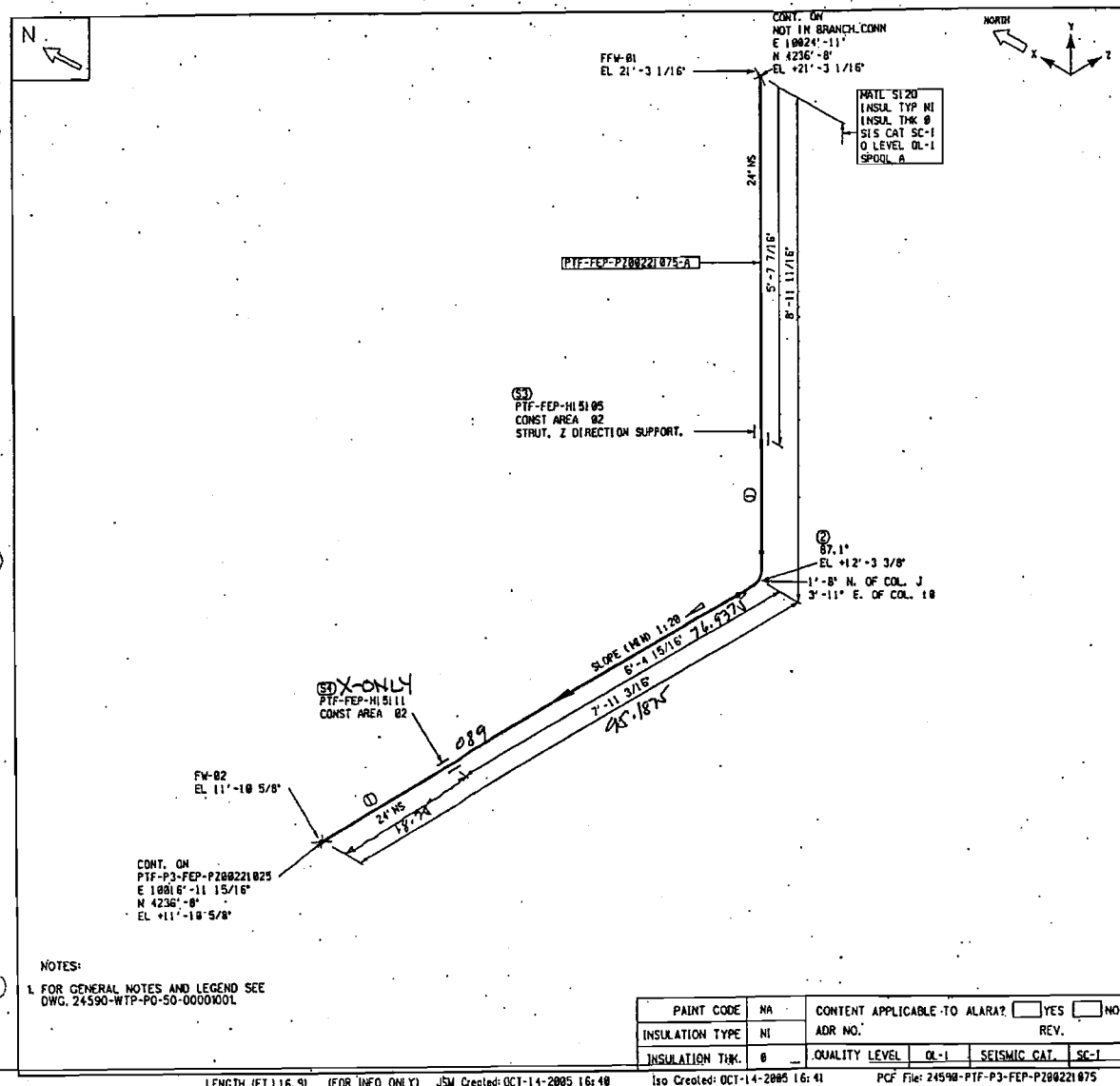

NOTES:

1. FOR GENERAL NOTES AND LEGEND SEE DWG. 24590-WTP-PO-50-00001001

SHOP MATERIALS

PART NO	COMPONENT DESCRIPTION	N.S. (INCHES)	QTY	BECHTEL STK CODE
	PIPE			
1	PIPE, A312TP304/304L, SFW, 0.375", BBE	24	11'3"	PPPCX80L1W0C
	FITTINGS			
2	TRIMMED ELBOW, 87.14 DEG., EL - 90, LR, BW, A403WP304/304L-WX, 0.375"	24	1	PFONX60L240U

FIELD MATERIALS

PART NO	COMPONENT DESCRIPTION	N.S. (INCHES)	QTY	BECHTEL STK CODE
	SUPPORTS			
3	PIPE SUPT, PTF-FEP-HS105		1	
4	PIPE SUPT, REVIEWME		1	

STRESS REVIEW PRINT	REV
☐ ACCEPTED	☐ NOT ACCEPTED
☐ ACCEPTED W/ COMMENTS	☐ SUPPORTS ADDED TO MODEL BY:
STRESS ANALYST:	DATE:

RIVER PROTECTION PROJECT
WASTE TREATMENT PLANT
2435 STEVENS CENTER PLACE
RICHLAND, WA 99352

CONTRACT No: DE-AC27-01RV14136

P&ID: 24590-PTF-MS-FEP-00004 | CONST. WORK AREA: 02

PRETREATMENT FACILITY ISOMETRIC

LINE No. FEP-PZ-00221-S12D-24 | PIPE SPEC: S12D

DWG No. 24590-PTF-P3-FEP-PZ00221075 | REV A

PAINT CODE	NA	CONTENT APPLICABLE TO ALARA? ☐ YES ☐ NO
INSULATION TYPE	NI	ADR NO. REV.
INSULATION THK.	0	QUALITY LEVEL: QL-1 SEISMIC CAT. SC-1

LENGTH (FT.) 16.91 (FOR INFO ONLY) JSM Created: OCT-14-2005 16:40 Iso Created: OCT-14-2005 16:41 PCF File: 24590-PTF-P3-FEP-PZ00221075 PLOTTED BY: ecocoma PLOT DATE: 10/17/2005 10:47:26 AM SHT. 1 OF 1

Use view 1 to place fence for plotting to not print date fields

ISO TYPE: PT_xSTRESS C:\Documents and Settings\ecocoma\Local Settings\Temporary Internet Files\VOLK3\FEP-PZ00221075-101505.DGN

COMPUTER GENERATED - MANUAL CHANGES NOT PERMITTED

AREA 27

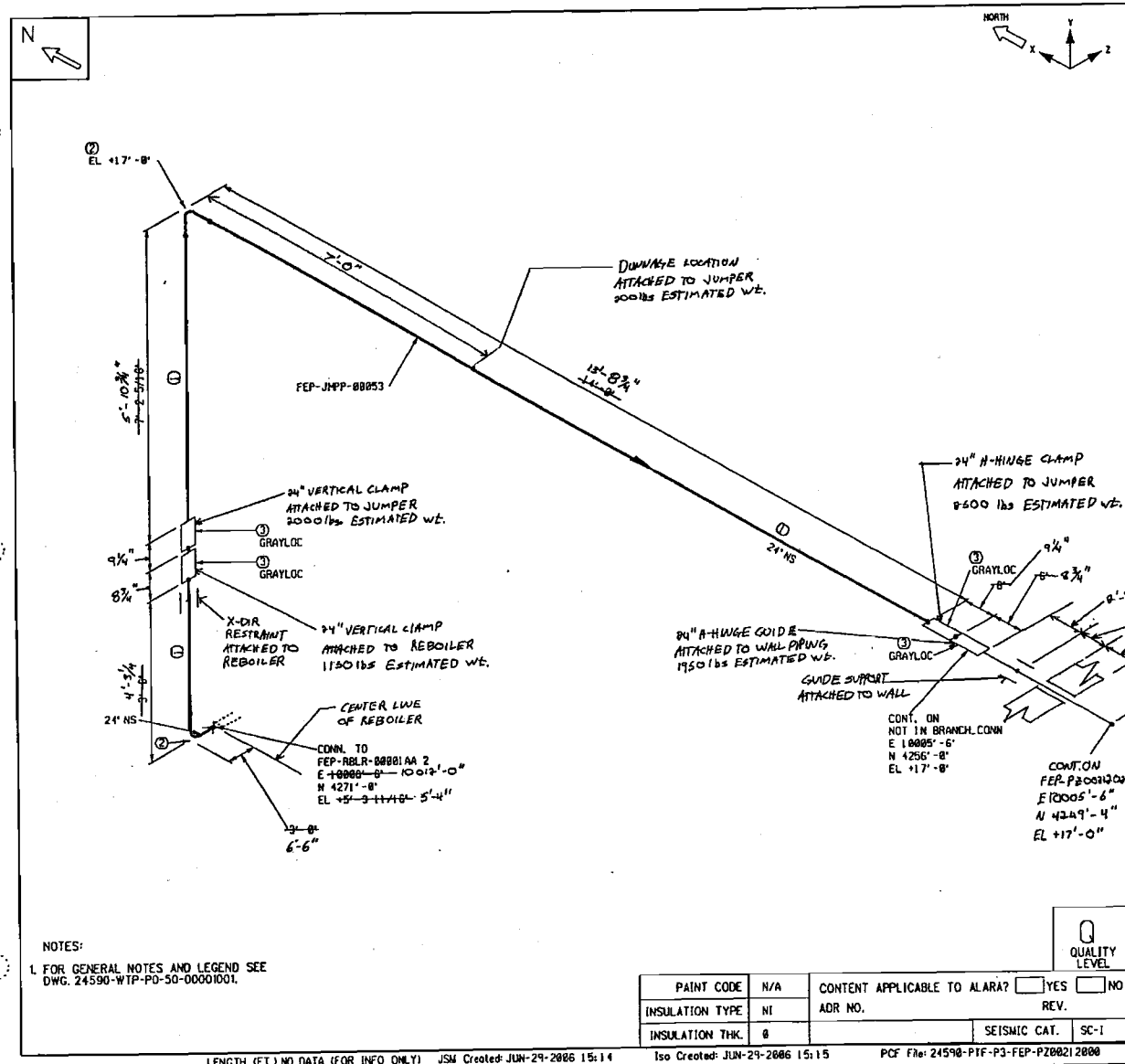

SHOP MATERIALS

PART NO	COMPONENT DESCRIPTION	N.S. (INCHES)	QTY	BECHTEL STK CODE
	PIPE			
1	PIPE, A312TP304/304L, EFW, 0.375", BBE	24	15'9"	PPPCX80L1W0C
	FITTINGS			
2	EL - 90, LR, BW, A403WP304/304L-WX, 0.375"	24	2	PFQWX60L240U
3	RCC, GRAYLOC	24	2	N/A

STRESS REVIEW PRINT		REV
☐ ACCEPTED	☐ NOT ACCEPTED	
☐ ACCEPTED W/ COMMENTS	☐ SUPPORTS ADDED TO MODEL BY:	
STRESS ANALYST:	DATE:	

RIVER PROTECTION PROJECT
WASTE TREATMENT PLANT
2435 STEVENS CENTER PLACE
RICHLAND, WA 99352

CONTRACT No: DE-AC27-01RV14136

P&ID: 24590-PTF-M6-FEP-00004 | CONST. WORK AREA: 21

PRETREATMENT FACILITY ISOMETRIC

LINE No. FEP-PZ-00212-S12D-24 | PIPE SPEC: S12D

DWG No. 24590-PTF-P3-FEP-PZ00212000 | REV A

NOTES:

1. FOR GENERAL NOTES AND LEGEND SEE DWG. 24590-WTP-PO-50-00001001.

Q QUALITY LEVEL

PAINT CODE	N/A	CONTENT APPLICABLE TO ALARA? ☐ YES ☐ NO
INSULATION TYPE	NI	ADR NO. REV.
INSULATION THK.	0	SEISMIC CAT. SC-I

COMPUTER GENERATED - MANUAL CHANGES NOT PERMITTED

ISO TYPE: PT_STRESS c:\iso\24590-PTF-P3-FEP-PZ00212000.DGN

LENGTH (FT.) NO DATA (FOR INFO ONLY) JSM Created: JUN-29-2006 15:14 Iso Created: JUN-29-2006 15:15 PCF File: 24590-PTF-P3-FEP-PZ00212000 PLOTTED BY: trvincen PLOT DATE: 07/05/2006 04:23:07 PM SHT. 1 OF 1

Use view 1 to place fence for plotting to not print date fields

COMPUTER GENERATED - MANUAL CHANGES NOT PERMITTED

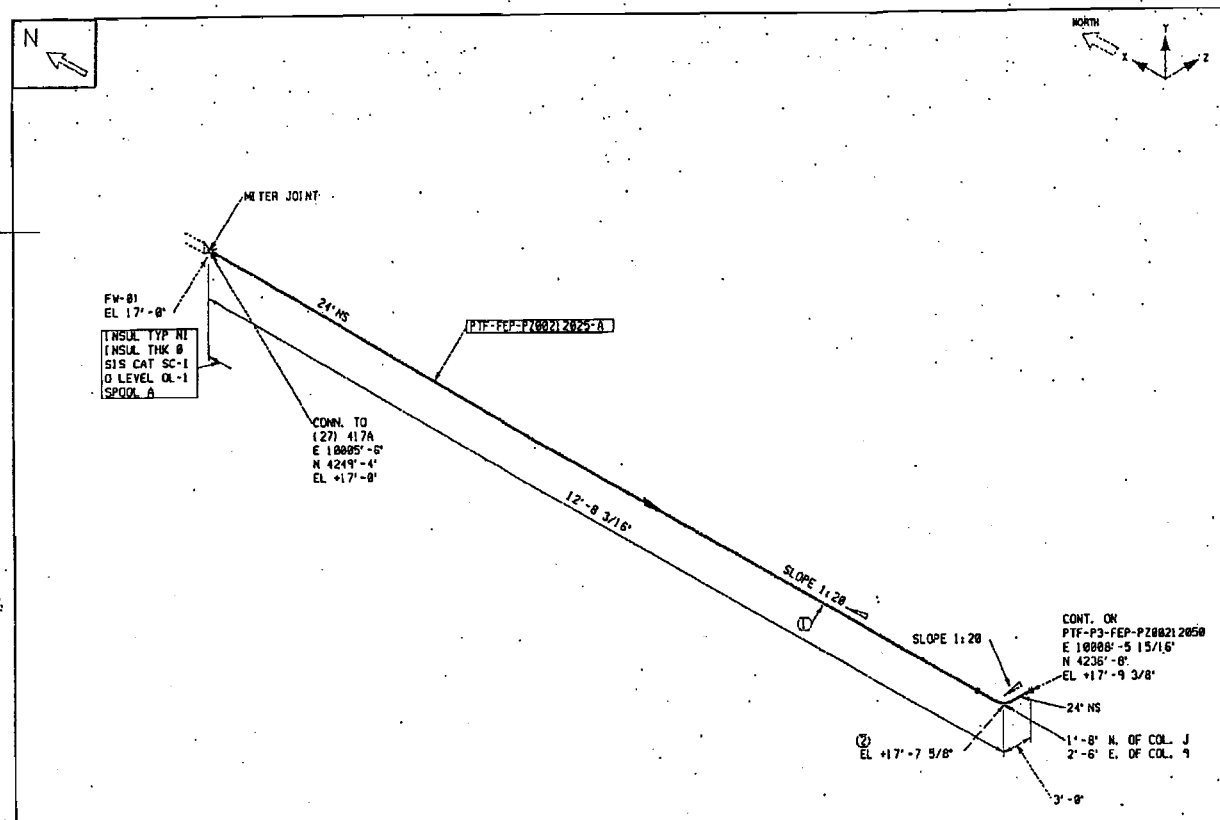

SHOP MATERIALS

PART NO	COMPONENT DESCRIPTION	N.S. (INCHES)	QTY	BECHTEL STK CODE
	PIPE			
1	PIPE, A312TP304/304L, EFW, 0.375", BBE	24	9'9"	PPPCXB0L1W0C
	FITTINGS			
2	EL - 90, LR, BW, A403WP304/304L-WX, 0.375"	24	1	PFCMXG0L240U

NOTES:

1. FOR GENERAL NOTES AND LEGEND SEE DWG. 24590-PTF-P3-P36T-01000.
2. SEE DWG. 24590-BOF-C2-C12T-00002 FOR CONVERSION FROM PTF FACILITY ELEVATIONS TO SITE ELEVATIONS. PTF FACILITY ELEVATION 0'-0" EQUALS SITE ELEVATION 678'-0".

PAINT CODE	NI	CONTENT APPLICABLE TO ALARA? ☐ YES ☐ NO			
INSULATION TYPE	NI	ADR NO.		REV.	
INSULATION THK.	0	QUALITY LEVEL	OL-1	SEISMIC CAT.	SC-1

STRESS REVIEW PRINT | REV

☐ ACCEPTED ☐ NOT ACCEPTED

☐ ACCEPTED W/ COMMENTS ☐ SUPPORTS ADDED TO MODEL BY:

STRESS ANALYST: DATE:

BECHTEL

RIVER PROTECTION PROJECT
WASTE TREATMENT PLANT
2435 STEVENS CENTER PLACE
RICHLAND, WA 99352

CONTRACT No: DE-AC27-01RV14136

P&ID: 24590-PTF-MG-FEP-00004 | CONST. WORK AREA: 02

PRETREATMENT FACILITY ISOMETRIC

LINE No. FEP-PZ-0021,2-S12D-24 | PIPE SPEC: S12D

DWG No. 24590-PTF-P3-FEP-PZ0021 2025 | REV A

ISO TYPE: PT_JSTRESS H:\STRESS\PTF_JU:1\Area_26\24590-*4.DGN

LENGTH (FT.): 15.88 (FOR INFO ONLY) JSW Created: JUN-25-2001 13:37 Iso Created: JUN-25-2001 13:38 PCF File: 24590-PTF-P3-FEP-PZ0021 2025 PLOTTED BY: kohuber PLOT DATE: 01/27/2005 10:36:53 AM SHT. 1 OF 1

Use view 1 to place fence for plotting to not print data fields

COMPUTER GENERATED - MANUAL CHANGES NOT PERMITTED

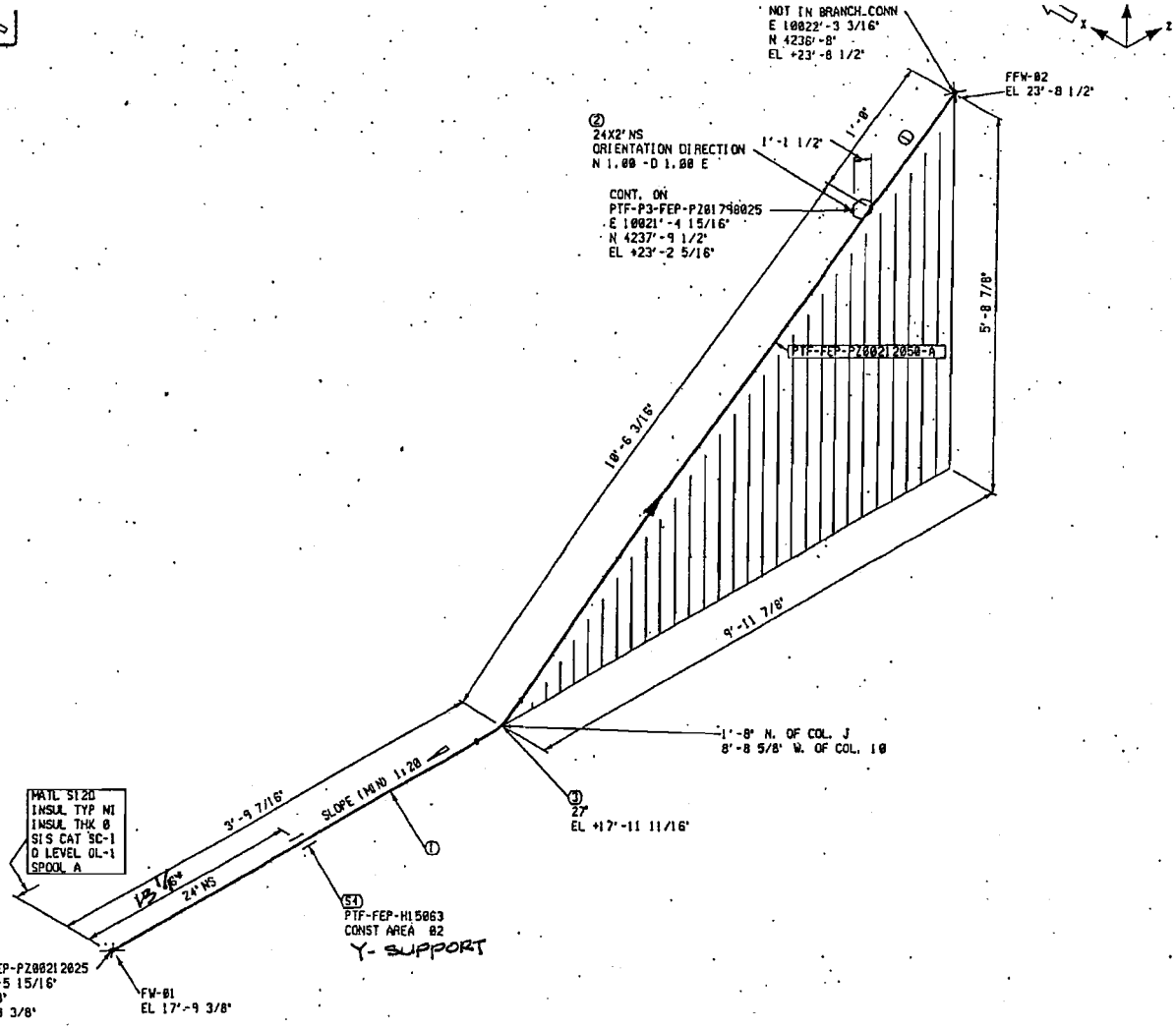

NOTES:

1. FOR GENERAL NOTES AND LEGEND SEE DWG. 24590-WTP-PO-50-00001001.

PART NO	COMPONENT DESCRIPTION	N.S. (INCHES)	QTY	BECHTEL STK CODE
	PIPE			
1	PIPE, A312TP304/304L, EFW, 0.375", BBE	24	13'11"	PPPCX00LIV0C
	FITTINGS			
2	WELDOLET, A182-F304/304L, 0.375", SCH80S	24X2	1	PFLW040LIXAT
3	TRIMMED ELBOW, 27.01 DEG., EL - 45, LR, BW, A403WP304/304L-WX, 0.375"	24	1	PFRWX90L230U
	FIELD MATERIALS			
PART NO	COMPONENT DESCRIPTION	N.S. (INCHES)	QTY	BECHTEL STK CODE
	SUPPORTS			
4	PIPE SUPT, PTF-FEP-H15063		1	

TJK 2-9-05

STRESS REVIEW PRINT	REV
☐ ACCEPTED	☐ NOT ACCEPTED
☐ ACCEPTED W/ COMMENTS	☐ SUPPORTS ADDED TO MODEL BY:
STRESS ANALYST:	DATE:

RIVER PROTECTION PROJECT
WASTE TREATMENT PLANT
2435 STEVENS CENTER PLACE
RICHLAND, WA 99352

CONTRACT No: DE-AC27-01RV14136

P&ID: 24590-PTF-MG-FEP-00004 | CONST. WORK AREA: 02

PRETREATMENT FACILITY ISOMETRIC

LINE No. FEP-PZ-00212-S120-24 | PIPE SPEC: S120

DWG No. 24590-PTF-P3-FEP-PZ00212050 | REV A.

PAINT CODE	NA	CONTENT APPLICABLE TO ALARA? ☐ YES ☐ NO			
INSULATION TYPE	NI	ADR NO.		REV.	
INSULATION THK.	0	QUALITY LEVEL	QL-1	SEISMIC CAT.	SC-I

~~LENGTH (FT.) 16.43 (FOR INFO ONLY)~~ ~~JSM Created FEB-08-2005 08:17~~ Iso Created: FEB-08-2005 08:17 PCF File: TMP_CONN_CHECK PLOTTED BY: ykim PLOT DATE: 02/08/2005 08:18:45 AM SHT. 1 OF 1

ISO TYPE: PT_XSTRESS C:\iso\tmp_conn_check.DGN

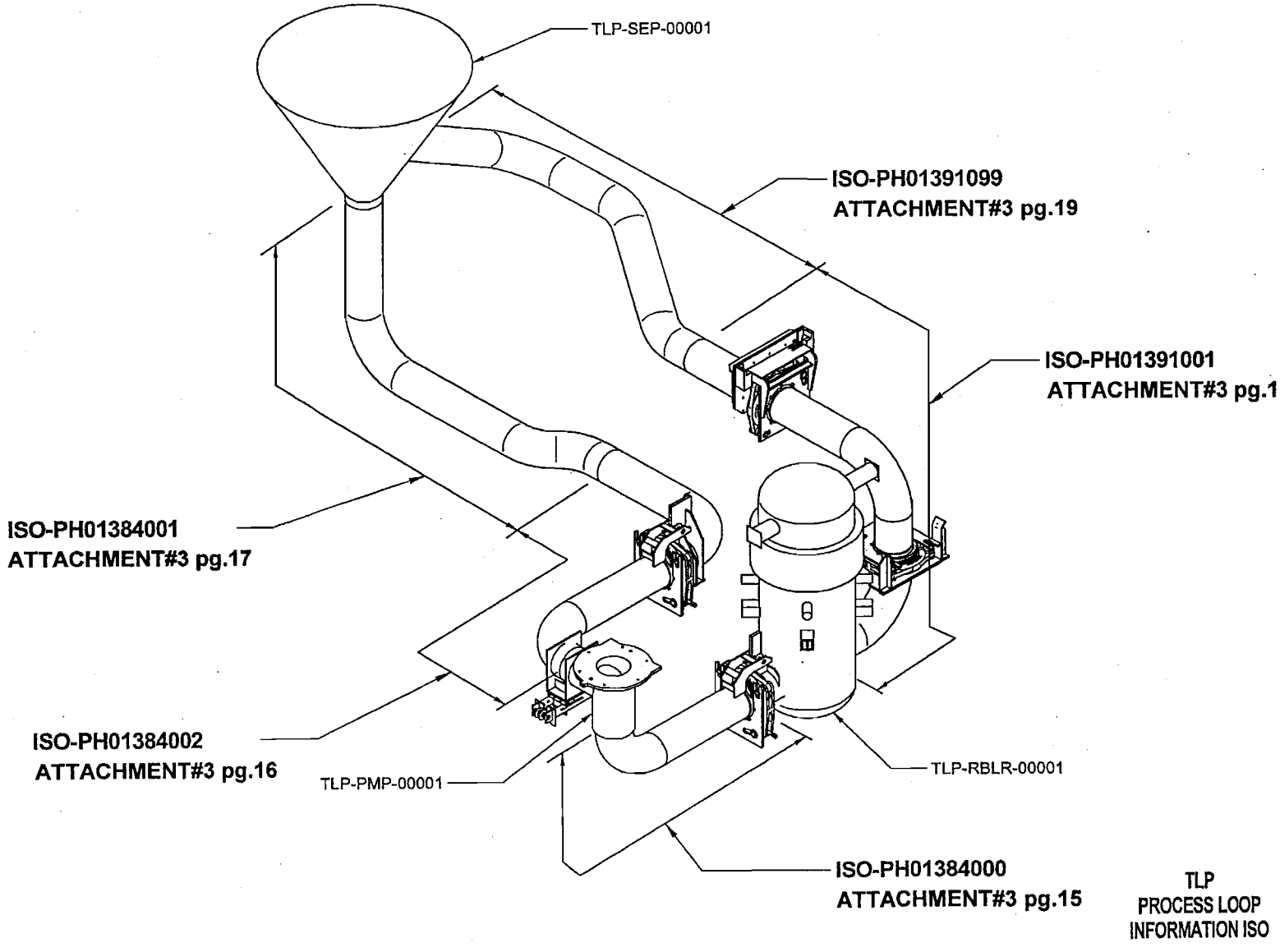

TLP
PROCESS LOOP
INFORMATION ISO

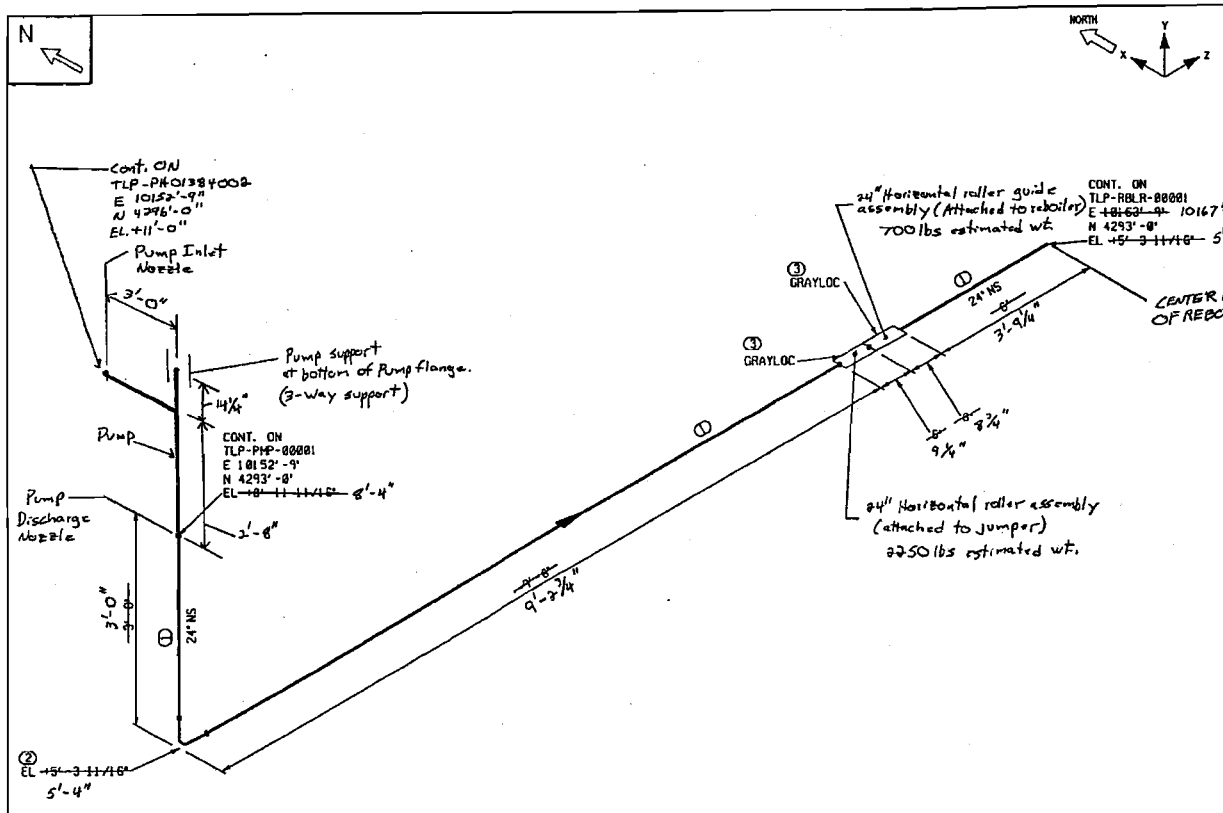

COMPUTER GENERATED - MANUAL CHANGES NOT PERMITTED

NOTES:

1. FOR GENERAL NOTES AND LEGEND SEE DWG. 24590-PTF-P3-P36T-01000.
2. SEE DWG. 24590-BOF-C2-C12T-00002 FOR CONVERSION FROM PTF FACILITY ELEVATIONS TO SITE ELEVATIONS. PTF FACILITY ELEVATION 0'-0" EQUALS SITE ELEVATION 678'-0".

SHOP MATERIALS

PART NO	COMPONENT DESCRIPTION	N.S. (INCHES)	QTY	BECHTEL STK CODE
	PIPE			
1	PIPE, A312TP316/316L, EFW, 0.375", BBE	24	8'6"	PPPC080L1V0C
	FITTINGS			
3	RCC (GRAYLOC)	24	1	N/A

AREA: 17

STRESS REVIEW PRINT	REV
☐ ACCEPTED	☐ NOT ACCEPTED
☐ ACCEPTED W/ COMMENTS	☐ SUPPORTS ADDED TO MODEL BY:
STRESS ANALYST:	DATE:

RIVER PROTECTION PROJECT
WASTE TREATMENT PLANT
2435 STEVENS CENTER PLACE
RICHLAND, WA 99352

CONTRACT No: DE-AC27-01RV14136

P&ID: NO DATA | CONST. WORK AREA: 21

PRETREATMENT FACILITY ISOMETRIC

LINE No. TLP-PH-01390-S12D-24 | PIPE SPEC: S12A

DWG No. 24590-PTF-P3-TLP-PH~~01390001~~-01384000 | REV A

PAINT CODE	-	CONTENT APPLICABLE TO ALARA? ☐ YES ☐ NO	QUALITY LEVEL
INSULATION TYPE	NI	ADR NO. REV.	
INSULATION THK.	0	* SEISMIC CAT. *	

LENGTH (FT.) NO DATA (FOR INFO ONLY) JSM Created: Iso Created: PCF File: PTF-TLP-PH01390001S PLOTTED BY: trvincen PLOT DATE: 06/21/2006 08:09:48 AM SHT. 1 OF 1

Use view 1 to place fence for plotting to not print data fields

h:\STRESS\STRESS_ISO\jumper\Area_17\ptf-tlp-ph01390001s.DGN

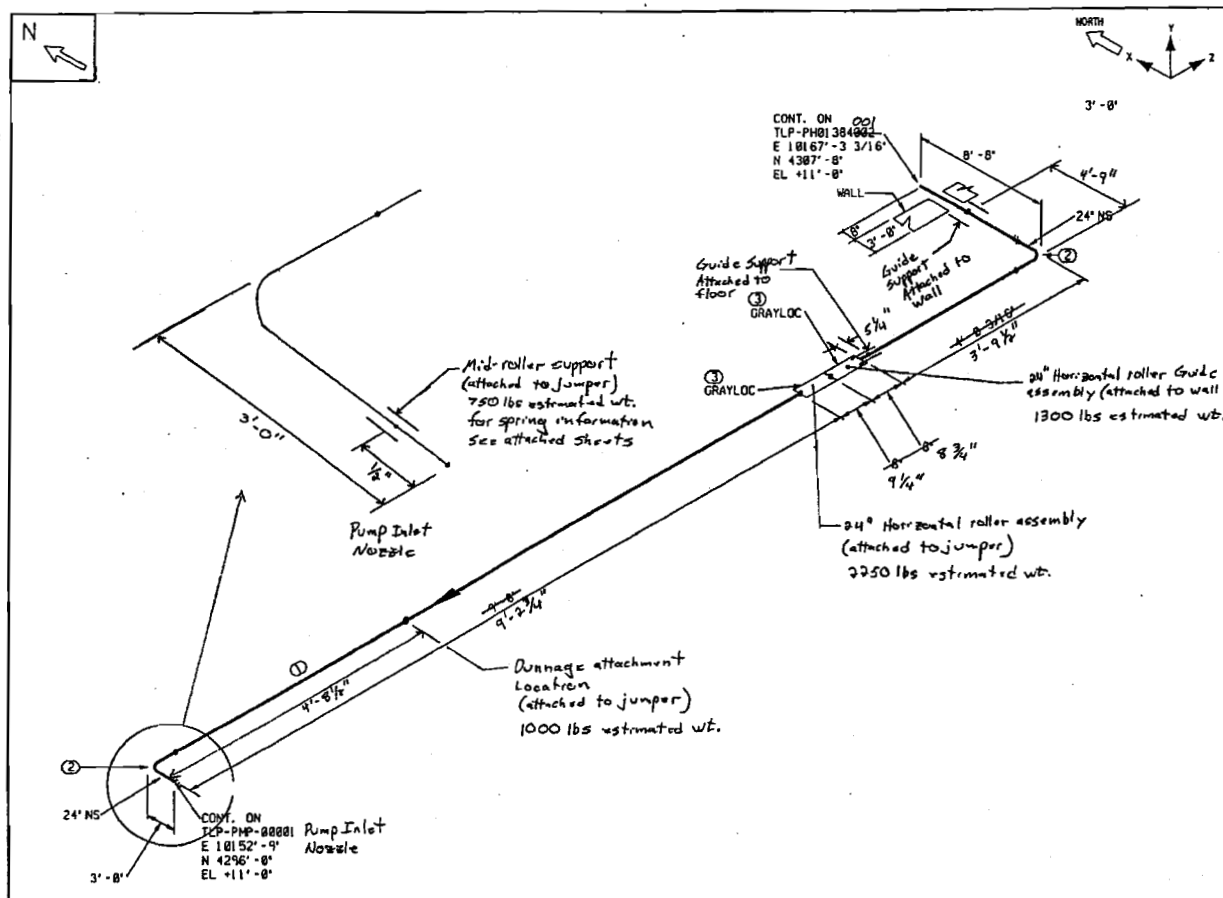

SHOP MATERIALS

PART NO	COMPONENT DESCRIPTION	N.S. (INCHES)	QTY	BECHTEL STK CODE
	PIPE			
1	PIPE, A312TP304/304L, EFW, 0.375", BBE	24	8'4"	PPPCX88L1W0C
	FITTINGS			
2	EL - 90, LR, BW, A403WP304/304L-WX, 0.375"	24	2	PFONX68L240U
3	RCC (GRAYLOC)	24	1	N/A

AREA: 17

STRESS REVIEW PRINT	REV
☐ ACCEPTED	☐ NOT ACCEPTED
☐ ACCEPTED W/ COMMENTS	☐ SUPPORTS ADDED TO MODEL BY:
STRESS ANALYST:	DATE:

RIVER PROTECTION PROJECT
WASTE TREATMENT PLANT
2435 STEVENS CENTER PLACE
RICHLAND, WA 99352

CONTRACT No: DE-AC27-01RV14136

P&ID: 24590-PTF-MG-TLP-00003 | CONST. WORK AREA: 21

PRETREATMENT FACILITY ISOMETRIC

LINE No. TLP-PH-01384-S12D-24 | PIPE SPEC: S12D

DWG No. 24590-PTF-P3-TLP-PH01384~~001~~-002 | REV A

NOTES:

1. FOR GENERAL NOTES AND LEGEND SEE DWG. 24590-PTF-P3-P36T-01000.
2. SEE DWG. 24590-BOF-C2-C12T-00002 FOR CONVERSION FROM PTF FACILITY ELEVATIONS TO SITE ELEVATIONS. PTF FACILITY ELEVATION 0'-0" EQUALS SITE ELEVATION 678'-0".

PAINT CODE	-	CONTENT APPLICABLE TO ALARA? ☐ YES ☐ NO		
INSULATION TYPE	NI	ADR NO.	REV.	
INSULATION THK.	0	DL-2	SEISMIC CAT.	SC-III

QUALITY LEVEL

LENGTH (FT.) NO DATA (FOR INFO ONLY) JSN Created: Iso Created: PCF File: PTF-TLP-PH01384001S

PLOTTED BY: irvincen PLOT DATE: 06/21/2006 08:00:59 AM SHT. 1 OF 1

Use view 1 to place fence for plotting to not print data fields

COMPUTER GENERATED - MANUAL CHANGES NOT PERMITTED

h:\STRESS\STRESS_ISO\jumper\Area_17\plf-tlp-ph01384001s.DGN

24590-PTF-3PS-MEVV-00012

Pg 3 of 5

ATTACHMENT #2

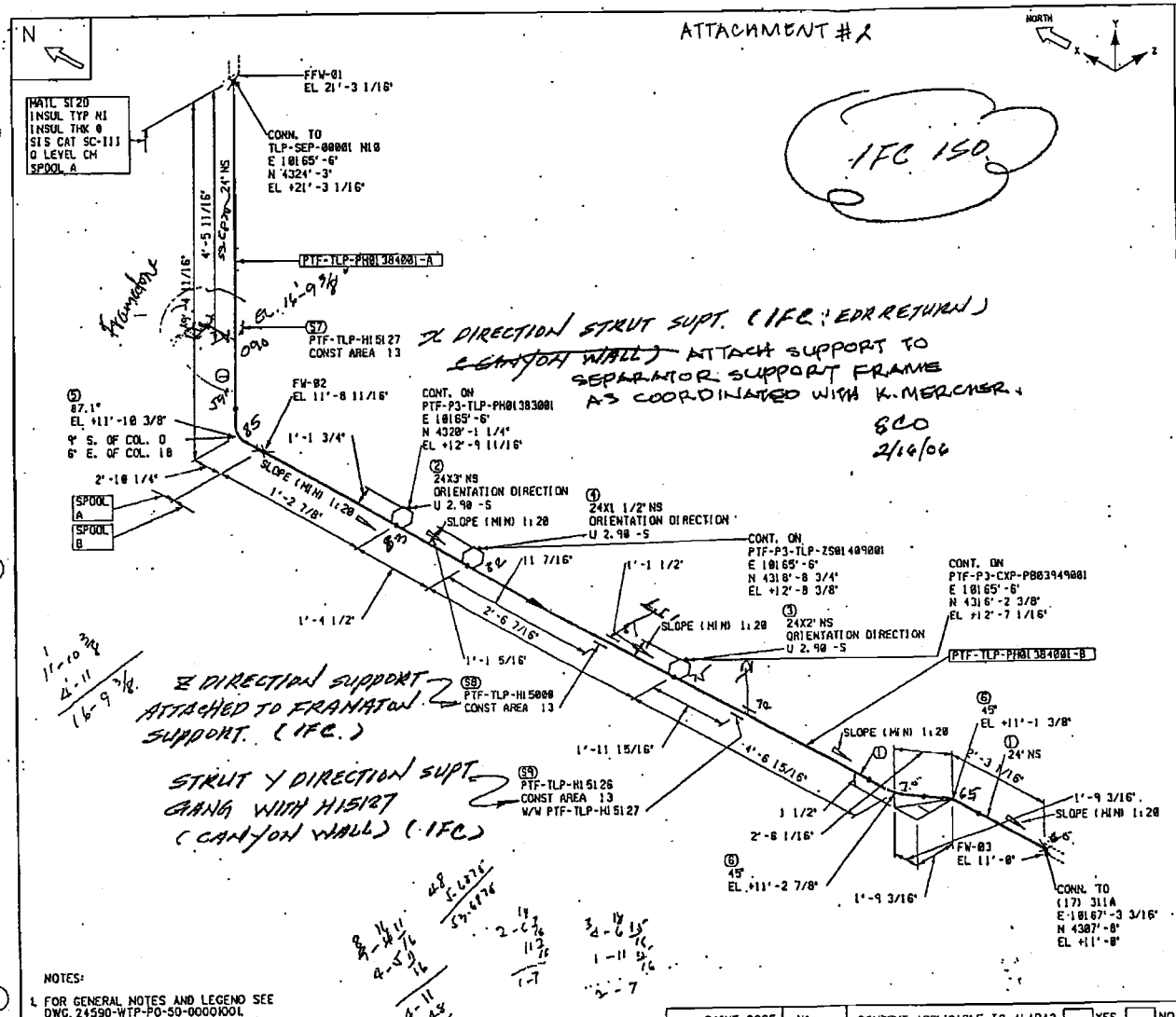

NOTES:

1. FOR GENERAL NOTES AND LEGEND SEE DWG. 24590-WTP-PO-S0-00001001.

PAINT CODE	NA	CONTENT APPLICABLE TO ALARA? ☐ YES ☐ NO			
INSULATION TYPE	NI	ADR NO.	REV.		
INSULATION THK.	0	QUALITY LEVEL	CM	SEISMIC CAT.	SC-III

LENGTH (FT.) 30.10 (FOR INFO ONLY) JSW Created: NOV-03-2005 11:35 Iso Created: NOV-03-2005 11:38. PCF File: 24590-PTF-P3-TLP-PH01384001

SHOP MATERIALS

PART NO	COMPONENT DESCRIPTION	N.S. (INCHES)	QTY	BECHTEL STK CODE
	PIPE			
1	PIPE, A312TP304/304L, EFW, 0.375", BBE	24	16'1"	PPPCXB0L1V0C
	FITTINGS			
2	WELDOLET, A182-F304/304L, 0.375", SCH40S	24X3	1	PFLW040L1VHA
3	WELDOLET, A182-F304/304L, 0.375", SCH80S	24X2	1	PFLW040L1XAT
4	WELDOLET, A182-F304/304L, 0.375", SCH80S	24X1 1/2	1	PFLW040L1XAS
5	TRIMMED ELBOW, 87.14 DEG., EL - 90, LR, BW, A403WP304/304L-WX, 0.375"	24	1	PFRNX0BL249U
6	EL - 45, LR, BW, A403WP304/304L-WX, 0.375"	24	2	PFRNX0BL230U

FIELD MATERIALS

PART NO	COMPONENT DESCRIPTION	N.S. (INCHES)	QTY	BECHTEL STK CODE
	SUPPORTS			
7	PIPE SUPT, PTF-TLP-HI5127		1	
8	PIPE SUPT, PTF-TLP-HI5000		1	
9	PIPE SUPT, VS-A-A3-60.0-24-C		1	

JAC 11-25-05

STRESS REVIEW PRINT	REV
☐ ACCEPTED	☐ NOT ACCEPTED
☐ ACCEPTED W/ COMMENTS	☐ SUPPORTS ADDED TO MODEL BY:
STRESS ANALYST:	DATE:

RIVER PROTECTION PROJECT
WASTE TREATMENT PLANT
2435 STEVENS CENTER PLACE
RICHLAND, WA 99352

CONTRACT No: DE-AC27-01RV14136

P&ID: 24590-PTF-M6-TLP-00003 CONST. WORK AREA: 13

PRETREATMENT FACILITY
ISOMETRIC

LINE No. TLP-PH-01384-S120-24 PIPE SPEC: S120

DWG No. 24590-PTF-P3-TLP-PH01384001 REV A

PLOTTED BY: $USERNAME$ PLOT DATE: $DATE$ $TIME$ SHT. 1 OF 1

ISO TYPE: PT_xSTRESS $FILE$

COMPUTER GENERATED - MANUAL CHANGES NOT PERMITTED

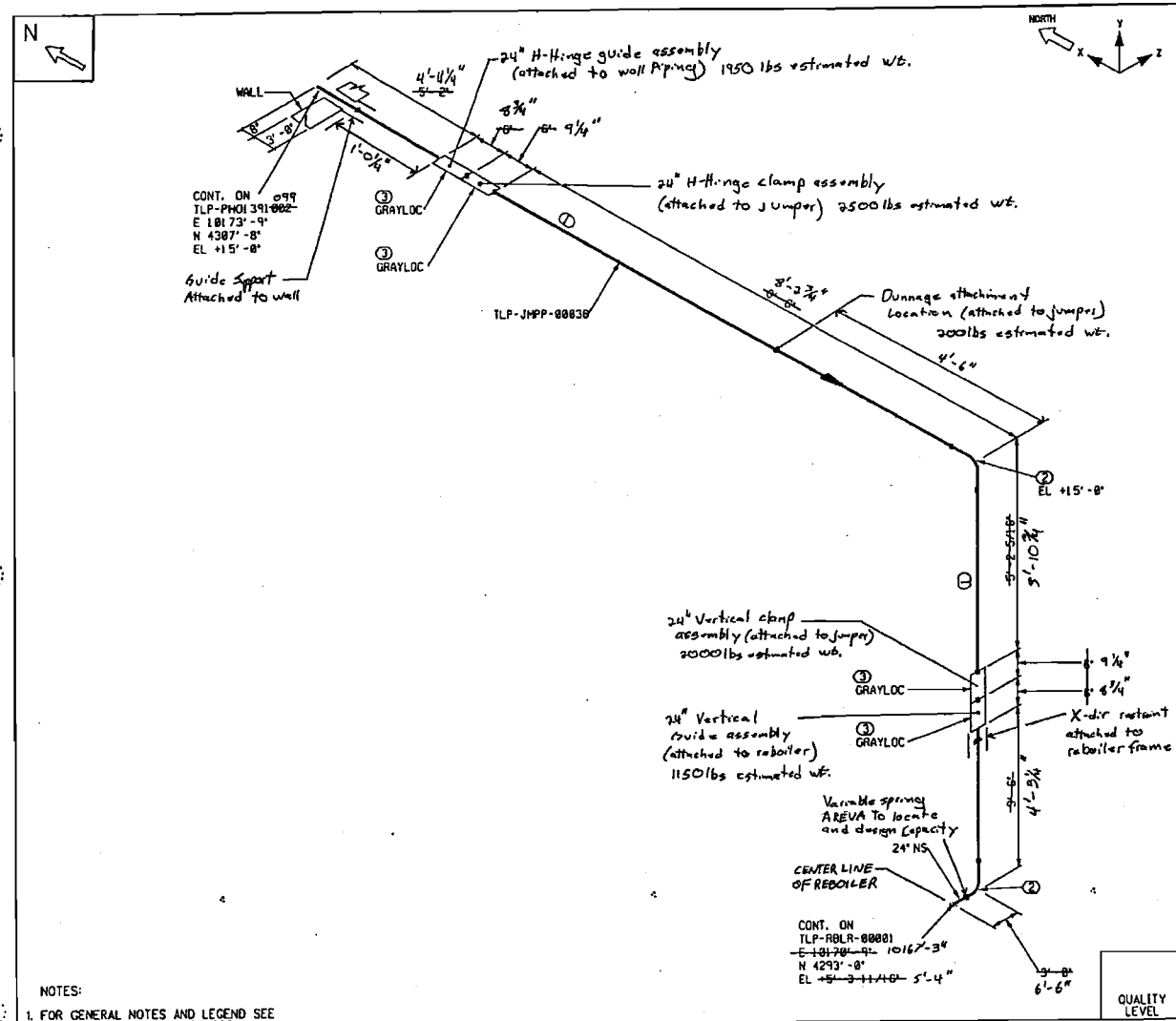

COMPUTER GENERATED - MANUAL CHANGES NOT PERMITTED

NOTES:

1. FOR GENERAL NOTES AND LEGEND SEE DWG. 24590-PTF-P3-P36T-01000.
2. SEE DWG. 24590-BOF-C2-C12T-00002 FOR CONVERSION FROM PTF FACILITY ELEVATIONS TO SITE ELEVATIONS. PTF FACILITY ELEVATION 0'-0" EQUALS SITE ELEVATION 678'-0".

SHOP MATERIALS

PART NO	COMPONENT DESCRIPTION	N.S. (INCHES)	QTY	BECHTEL STK CODE
	PIPE			
1	PIPE, A312TP304/304L, EFW, 0.375", BBE	24	8' 3"	PPPCX60L1WBC
	FITTINGS			
2	EL - 90, LR, BW, A403WP304/304L-WX, 0.375"	24	2	PFQNX60L240U
3	RCC (GRAYLOC)	24	12	N/A

AREA: 17

STRESS REVIEW PRINT	REV
☐ ACCEPTED	☐ NOT ACCEPTED
☐ ACCEPTED W/ COMMENTS	☐ SUPPORTS ADDED TO MODEL BY:
STRESS ANALYST:	DATE:

RIVER PROTECTION PROJECT
WASTE TREATMENT PLANT
2435 STEVENS CENTER PLACE
RICHLAND, WA 99352

CONTRACT No: DE-AC27-01RV14136

P&ID: 24590-PTF-M6-TLP-00003 | CONST. WORK AREA: 21

PRETREATMENT FACILITY ISOMETRIC

LINE No. TLP-PH-01391-S12D-24 | PIPE SPEC: S12D

DWG No. 24590-PTF-P3-TLP-PH01391001 | REV A

PAINT CODE	-	CONTENT APPLICABLE TO ALARA? ☐ YES ☐ NO		
INSULATION TYPE	NI	ADR NO.	REV.	
INSULATION THK.	0	QL-2	SEISMIC CAT.	SC-III

QUALITY LEVEL

LENGTH (FT.) NO DATA (FOR INFO ONLY) JSM Created: Iso Created: PCF File: PTF-TLP-PH01391001S PLOTTED BY: trvincen PLOT DATE: 06/21/2006 09:43:41 AM SHT. 1 OF 1

Use view 1 to place fence for plotting to not print data fields

h:\STRESS\STRESS_ISO\jumper\Area_17\ptf-tlp-ph01391001s.DGN

24590-PTF-3PN-MEW-00012 Pg 5 of 5

ATTACHMENT #2

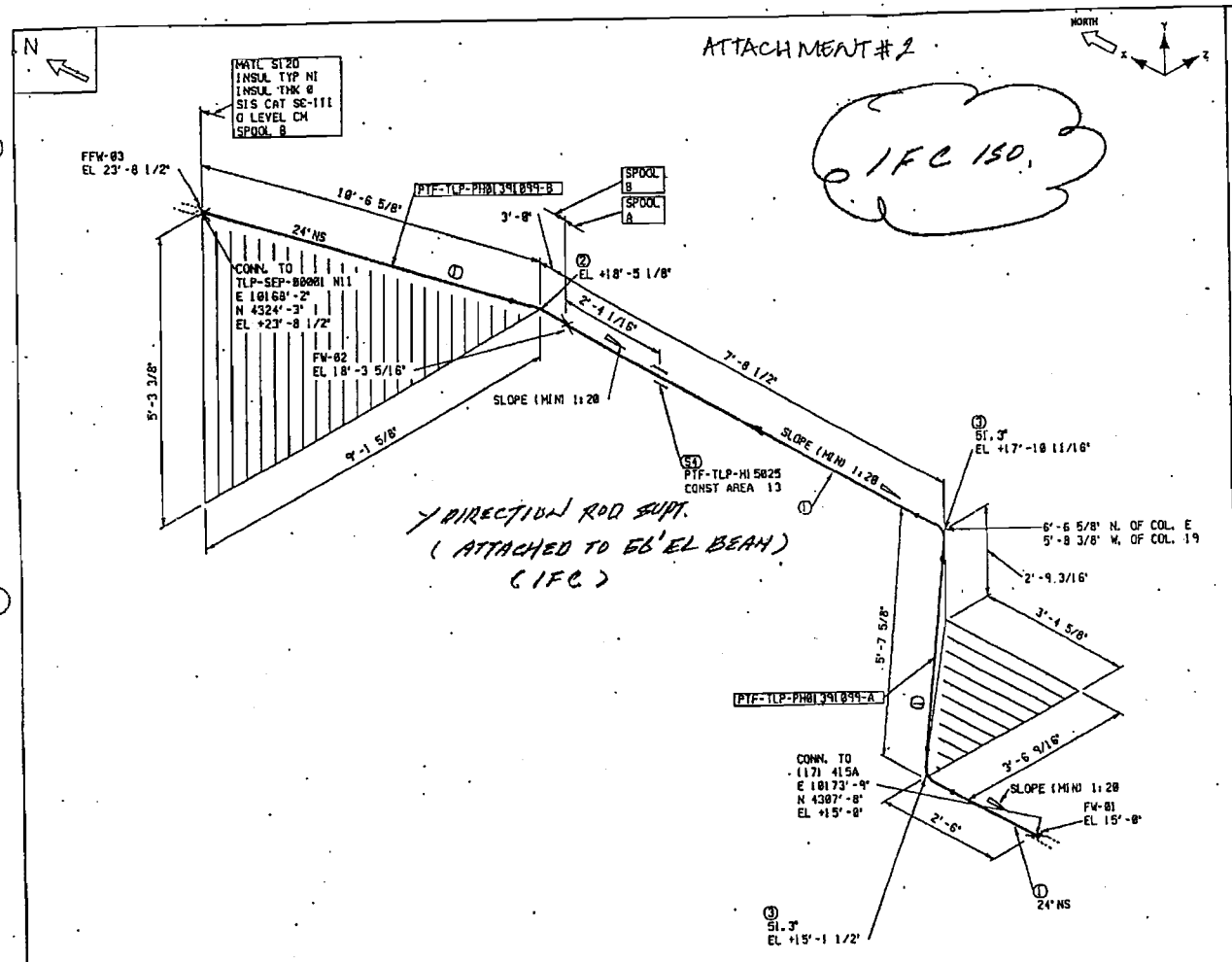

NOTES:

1. FOR GENERAL NOTES AND LEGEND SEE DWG. 24590-WTP-PG-50-00001001.

SHOP MATERIALS

PART NO	COMPONENT DESCRIPTION	N.S. (INCHES)	QTY	BECHTEL STK CODE
	PIPE			
1	PIPE, A312TP304/304L, EFW, 0.375", SBE	24	17'-8"	PPPCX80L1W0C
	FITTINGS			
2	EL - 90, LR, BW, A403WP304/304L-WX, 0.375"	24	1	PFQNX60L240U
3	TRIMMED ELBOW, 51.31 DEG., EL - 90, LR, BW, A403WP304/304L-WX, 0.375"	24	2	PFQNX60L240U

FIELD MATERIALS

PART NO	COMPONENT DESCRIPTION	N.S. (INCHES)	QTY	BECHTEL STK CODE
	SUPPORTS			
4	PIPE SUPT, PTF-TLP-H15025		1	

JHL 11-25-05.

STRESS REVIEW PRINT	REV
☐ ACCEPTED	☐ NOT ACCEPTED
☐ ACCEPTED W/ COMMENTS	☐ SUPPORTS ADDED TO MODEL BY:
STRESS ANALYST:	DATE:

RIVER PROTECTION PROJECT
WASTE TREATMENT PLANT
2435 STEVENS CENTER PLACE
RICHLAND, WA 99352

CONTRACT No: DE-AC27-01RV14136

P&ID: 24590-PTF-M6-TLP-00003 CONST. WORK AREA: 13

PRETREATMENT FACILITY
ISOMETRIC

LINE No. TLP-PH-01391-S120-24 PIPE SPEC: S120

DWG No. 24590-PTF-P3-TLP-PH01391099 REV A

PAINT CODE	NA	CONTENT APPLICABLE TO ALARA? ☐ YES ☐ NO			
INSULATION TYPE	NI	ADR NO.		REV.	
INSULATION THK.	0	QUALITY LEVEL	CH	SEISMIC CAT.	SC-III

LENGTH (FT.) 29.48 (FOR INFO ONLY) JSW Created: NOV-03-2005 11:35 Iso Created: NOV-03-2005 11:38 PCF File: 24590-PTF-P3-TLP-PH01391099 PLOTTED BY: $USERNAME$ PLOT DATE: $DATE$ $TIME$ SHT. 1 OF 1

ISO TYPE: PT_KSTRESS $FILE$

COMPUTER GENERATED - MANUAL CHANGES NOT PERMITTED

24" Mid Roller Assembly.

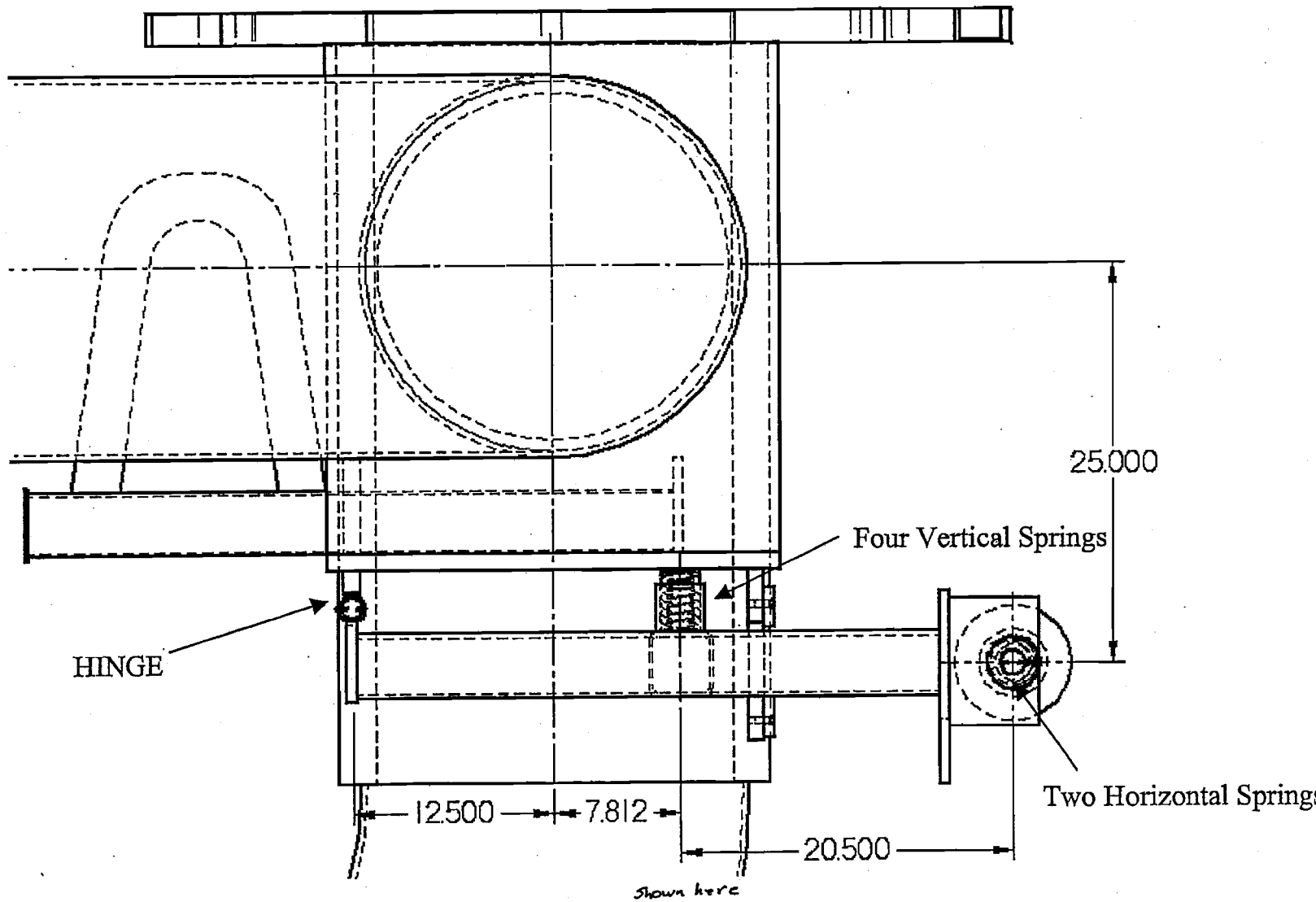

Note: Use Mid Roller Assembly spring configuration shown here for all Mid Roller Assemblies until finalized information is available.

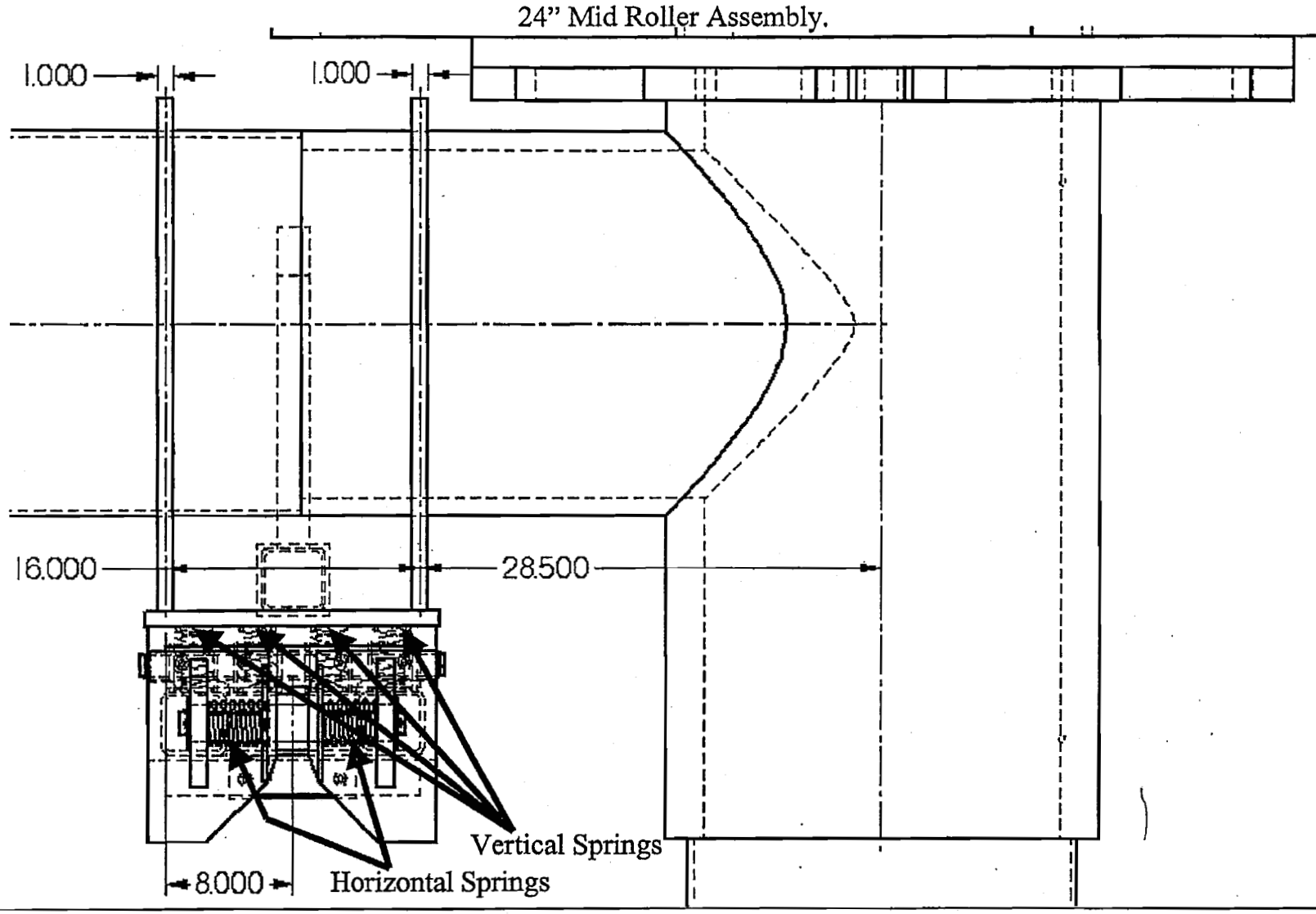

Vertical Spring:
•Spring Rate: 1310 lbs/in
•Preload: Four springs are compressed approximately 0.150" during installed cold condition. (Springs are in parallel)
Horizontal Spring (North-South):
•Spring Rate: 76 lbs/in
•Preload: 0.000" preload during the installed cold condition. (One spring acting in north direction, one acting spring in south direction)

ATTACHMENT # 4

Attached tables show the design load requirements for forces and moments applied to piping nozzles on separator vessels, reboilers, and condensers.

The direction of the listed forces and moments for vertical nozzles into the equipment head are provided in global coordinates (X = North/South, y = vertical, and z = East/West - Vessel 0° defined as North).

The directions of the listed forces and moments for horizontal nozzles into the equipment shell are provided in local coordinates per 24590-WTP-3PS-MV00-T0001.

FEP-SEP-00001A SC-I : TABLE 1

CCN 124031

Note:
*V = vertical head nozzle - values are x = North/South, y = vertical, z = East/West (global coordinates), Vessel 0° defined as North
**H = horizontal shell nozzle - values are per axes shown in 24590-WTP-3PS-MV00-T0001 Rev 2, Appendix A (local coordinates)

Nozzle Number	Nozzle Size (in)	Orientation (V* / H**)	Load Case	Design Loads (Force in lbs, Moment in ft-lb)					
				Fx	Fy	Fz	Mx	My	Mz
N01*	1	H	Weight	15	20	15	20	20	20
			Seismic	30	20	30	37	55	55
			Thermal	10	10	10	10	20	20
N02*	1	H	Weight	15	20	15	20	20	20
			Seismic	30	20	30	37	55	55
			Thermal	10	10	21	10	39	20
N03*	1	H	Weight	15	20	15	20	20	20
			Seismic	30	20	30	37	55	55
			Thermal	10	10	10	10	20	20
N04	30	H	Weight	By Vendor	By Vendor	By Vendor	By Vendor	By Vendor	By Vendor
			Seismic	By Vendor	By Vendor	By Vendor	By Vendor	By Vendor	By Vendor
			Thermal	By Vendor	By Vendor	By Vendor	By Vendor	By Vendor	By Vendor
N05	2	H	Weight	50	60	50	75	75	75
			Seismic	106	70	106	158	237	237
			Thermal	30	38	40	68	80	80
N07	1	H	Weight	15	20	15	20	20	20
			Seismic	30	20	30	37	55	55
			Thermal	10	12	10	10	20	32
N08*	1	H	Weight	15	20	15	20	20	20
			Seismic	30	20	30	37	55	55
			Thermal	10	10	10	10	20	20
N09*	1	H	Weight	15	20	15	20	20	20
			Seismic	30	20	30	37	55	55
			Thermal	10	10	10	10	20	20
N10[1]	24	V	Weight	Later	Later	Later	Later	Later	Later
			Seismic	Later	Later	Later	Later	Later	Later
			Thermal	Later	Later	Later	Later	Later	Later
N11[1]	24	H	Weight	Later	Later	Later	Later	Later	Later
			Seismic	Later	Later	Later	Later	Later	Later
			Thermal	Later	Later	Later	Later	Later	Later
N13	4	H	Weight	90	242	90	257	161	398
			Seismic	626	712	626	2220	3330	3330
			Thermal	80	70	110	270	540	540
N14	2	H	Weight	50	64	50	75	75	188
			Seismic	106	189	106	158	237	593
			Thermal	86	33	46	94	154	80
N17	2	H	Weight	50	60	50	75	75	88
			Seismic	106	106	106	158	237	254
			Thermal	159	30	67	40	236	80
N19	1	H	Weight	15	20	15	20	20	20
			Seismic	33	29	55	37	55	55
			Thermal	16	13	25	10	20	20

1. Values to be provided later upon completion of piping analysis.

2 of 3

FEP-SEP-00001A SC-I : TABLE 1 (CONT.)

CCN 124031

Note:
*V = vertical head nozzle - values are x = North/South, y = vertical, z = East/West (global coordinates), Vessel 0° defined as North
**H = horizontal shell nozzle - values are per axes shown in 24590-WTP-3PS-MV00-T0001 Rev 2, Appendix A (local coordinates)

Nozzle Number	Nozzle Size (in)	Orientation (V* / H**)	Load Case	Design Loads (Force in lbs, Moment in ft-lb)					
				Fx	Fy	Fz	Mx	My	Mz
N21*	1	H	Weight	15	20	15	20	20	20
			Seismic	30	20	30	37	55	55
			Thermal	10	10	10	10	20	20
N22	1	H	Weight	15	20	15	20	20	20
			Seismic	30	21	30	37	55	55
			Thermal	10	21	10	10	20	20
N23	1	H	Weight	15	20	15	20	20	20
			Seismic	30	23	30	37	55	55
			Thermal	10	10	10	10	20	20
N24	1	H	Weight	15	20	15	20	20	20
			Seismic	30	20	30	37	55	55
			Thermal	10	10	10	10	20	20
N25	1	H	Weight	15	20	15	20	20	20
			Seismic	30	23	30	37	73	55
			Thermal	10	10	10	10	20	20
N27*	1	H	Weight	15	20	15	20	20	20
			Seismic	30	20	30	37	55	55
			Thermal	10	10	10	10	20	20
N28*	1	H	Weight	15	20	15	20	20	20
			Seismic	30	20	30	37	55	55
			Thermal	12	10	10	10	20	20
N30	24	Manway	Weight	Manway	Manway	Manway	Manway	Manway	Manway
			Seismic	Manway	Manway	Manway	Manway	Manway	Manway
			Thermal	Manway	Manway	Manway	Manway	Manway	Manway
N32 Spare	1	H	Weight	15	20	15	20	20	20
			Seismic	30	20	30	37	55	55
			Thermal	10	10	10	10	20	20

*Nozzle loads for these bubblers due to hydrogen accumulation are not available and will be provided later.

3 of 3

1. Values to be provided later upon completion of piping analysis.

FEP-SEP-00001B SC-I : TABLE 2

CCN 124032

Note:
*V = vertical head nozzle - values are x = North/South, y = vertical, z = East/West (global coordinates), Vessel 0° defined as North
**H = horizontal shell nozzle - values are per axes shown in 24590-WTP-3PS-MV00-T0001 Rev 2, Appendix A (local coordinates)

Nozzle Number	Nozzle Size (in)	Orientation (V* / H**)	Load Case	Design Loads (Force in lbs, Moment in ft-lb)					
				Fx	Fy	Fz	Mx	My	Mz
N01*	1	H	Weight	15	20	15	20	20	20
			Seismic	30	20	30	37	55	55
			Thermal	10	10	10	10	20	20
N02*	1	H	Weight	15	20	15	20	20	20
			Seismic	30	20	30	37	55	55
			Thermal	10	10	10	10	20	20
N03*	1	H	Weight	15	20	15	20	20	20
			Seismic	30	20	30	37	55	55
			Thermal	10	10	10	10	20	20
N04	30	H	Weight	By Vendor	By Vendor	By Vendor	By Vendor	By Vendor	By Vendor
			Seismic	By Vendor	By Vendor	By Vendor	By Vendor	By Vendor	By Vendor
			Thermal	By Vendor	By Vendor	By Vendor	By Vendor	By Vendor	By Vendor
N05	2	H	Weight	50	60	50	75	75	75
			Seismic	106	70	106	158	237	237
			Thermal	30	30	40	40	80	80
N07	1	H	Weight	15	20	15	20	20	20
			Seismic	33	20	30	37	55	55
			Thermal	10	20	10	10	20	48
N08*	1	H	Weight	15	20	15	20	20	20
			Seismic	30	20	30	37	55	55
			Thermal	10	10	10	10	20	20
N09*	1	H	Weight	15	20	15	20	20	20
			Seismic	30	20	30	37	55	55
			Thermal	10	10	10	10	20	20
N10[1]	24	V	Weight	Later	Later	Later	Later	Later	Later
			Seismic	Later	Later	Later	Later	Later	Later
			Thermal	Later	Later	Later	Later	Later	Later
N11[1]	24	H?	Weight	Later	Later	Later	Later	Later	Later
			Seismic	Later	Later	Later	Later	Later	Later
			Thermal	Later	Later	Later	Later	Later	Later
N13	4	H	Weight	90	215	90	257	161	347
			Seismic	626	418	626	2220	3330	3330
			Thermal	80	70	116	407	540	540
N14	2	H	Weight	50	64	50	75	75	142
			Seismic	106	70	106	201	237	237
			Thermal	69	33	40	70	118	80
N17	2	H	Weight	50	60	50	75	75	80
			Seismic	106	70	106	188	237	237
			Thermal	158	30	53	40	298	80
N19	1	H	Weight	15	20	15	20	20	20
			Seismic	39	20	38	37	55	55
			Thermal	14	10	15	10	20	20

1. Values to be provided later upon completion of piping analysis.

FEP-SEP-00001B SC-I : TABLE 2 (cont.)

CCN 124032

Note:
*V = vertical head nozzle - values are x = North/South, y = vertical, z = East/West (global coordinates), Vessel 0° defined as North
**H = horizontal shell nozzle - values are per axes shown in 24590-WTP-3PS-MV00-T0001 Rev 2, Appendix A (local coordinates)

Nozzle Number	Nozzle Size (in)	Orientation (V* / H**)	Load Case	Design Loads (Force in lbs, Moment in ft-lb)					
				Fx	Fy	Fz	Mx	My	Mz
N21*	1	H	Weight	15	20	15	20	20	20
			Seismic	30	21	30	37	55	55
			Thermal	10	10	10	10	20	20
N22	1	H	Weight	15	20	15	20	20	20
			Seismic	30	20	30	37	55	55
			Thermal	10	20	10	10	20	20
N23	1	H	Weight	15	20	15	20	20	20
			Seismic	30	21	30	37	55	55
			Thermal	10	10	10	10	20	20
N24	1	H	Weight	15	20	15	20	20	20
			Seismic	30	20	30	37	55	55
			Thermal	10	10	10	10	20	20
N25	1	H	Weight	15	20	15	20	20	20
			Seismic	30	20	30	37	55	55
			Thermal	10	10	10	10	20	20
N27*	1	H	Weight	15	20	15	20	20	20
			Seismic	30	20	30	37	55	55
			Thermal	10	10	10	10	20	20
N28*	1	H	Weight	15	20	15	20	20	20
			Seismic	30	20	30	37	55	55
			Thermal	10	10	10	10	20	20
N30	24	Manway	Weight	Manway	Manway	Manway	Manway	Manway	Manway
			Seismic	Manway	Manway	Manway	Manway	Manway	Manway
			Thermal	Manway	Manway	Manway	Manway	Manway	Manway
N32 Spare	1	H	Weight	15	20	15	20	20	20
			Seismic	30	20	30	37	55	55
			Thermal	10	10	10	10	20	20

* Nozzle loads for these bubblers due to hydrogen accumulation are not available and will be provided later.

1. Values to be provided later upon completion of piping analysis.

TLP-SEP-00001 SC-I : TABLE 3

CCN 139984

Note:
*V = vertical head nozzle - values are x = North/South, y = vertical, z = East/West (global coordinates), Vessel 0° defined as North
**H = horizontal shell nozzle - values are per axes shown in 24590-WTP-3PS-MV00-T0001 Rev 2, Appendix A (local coordinates)

Nozzle Number	Nozzle Size (in)	Orientation (V* / H*)	Load Case	Design Loads (Force in lbs, Moment in ft-lb)					
				Fx	Fy	Fz	Mx	My	Mz
N01*	1	H	Weight	15	20	15	20	20	20
			Seismic	69	21	30	37	55	69
			Thermal	20	37	20	33	30	55
N02*	1	H	Weight	15	24	15	20	20	25
			Seismic	117	28	46	43	55	117
			Thermal	20	10	20	20	30	30
N03*	1	H	Weight	15	20	15	20	20	23
			Seismic	60	26	30	37	78	60
			Thermal	20	10	20	20	30	30
N04	30	Vendor	Weight	Vendor	Vendor	Vendor	Vendor	Vendor	Vendor
			Seismic						
			Thermal						
N07	1	H	Weight	15	20	15	20	20	20
			Seismic	30	20	30	37	55	55
			Thermal	20	13	20	20	30	30
N08*	1	H	Weight	15	28	15	29	20	49
			Seismic	64	32	30	42	59	64
			Thermal	20	12	20	20	30	30
N09*	1	H	Weight	15	21	15	20	20	42
			Seismic	89	33	64	37	145	89
			Thermal	20	10	20	20	30	30
N10	24	V	Weight	Later	Later	Later	Later	Later	Later
			Seismic						
			Thermal						
N11	24	H	Weight	Later	Later	Later	Later	Later	Later
			Seismic						
			Thermal						
N13	4	H	Weight	87	281	87	216	142	748
			Seismic	1722	541	274	878	1320	1722
			Thermal	150	246	200	480	950	950
N14	2	H	Weight	50	60	50	75	75	89
			Seismic	162	70	106	158	237	237
			Thermal	115	40	60	70	130	130
N17	2	H	Weight	50	60	50	75	75	75
			Seismic	106	70	106	158	237	237
			Thermal	136	81	60	75	130	130
N19	1	H	Weight	15	20	15	20	20	20
			Seismic	30	20	30	37	55	55
			Thermal	20	10	20	20	30	30

TLP-SEP-00001 SC-I : TABLE 3 (CONT.)

CCN 139984

Note:
*V = vertical head nozzle - values are x = North/South, y = vertical, z = East/West (global coordinates), Vessel 0° defined as North
**H = horizontal shell nozzle - values are per axes shown in 24590-WTP-3PS-MV00-T0001 Rev 2, Appendix A (local coordinates)

Nozzle Number	Nozzle Size (in)	Orientation (V* / H*)	Load Case	Design Loads (Force in lbs, Moment in ft-lb)					
				Fx	Fy	Fz	Mx	My	Mz
N21 *	1	H	Weight	15	20	15	20	20	20
			Seismic	30	20	30	37	55	55
			Thermal	20	10	20	20	30	30
N22	1	H	Weight	15	20	15	20	20	20
			Seismic	30	20	30	37	55	55
			Thermal	20	12	20	20	30	30
N23	1	H	Weight	15	20	15	20	20	20
			Seismic	30	20	30	37	55	55
			Thermal	20	23	20	20	30	30
N24	1	H	Weight	15	20	15	20	20	36
			Seismic	77	26	34	37	85	77
			Thermal	20	11	20	20	30	30
N25	1	H	Weight	15	20	15	20	20	20
			Seismic	41	20	30	37	62	55
			Thermal	20	10	20	20	30	30
N27 *	1	H	Weight	15	20	15	20	20	20
			Seismic	30	20	30	37	55	55
			Thermal	20	15	20	20	30	30
N28 *	1	H	Weight	15	20	15	20	20	20
			Seismic	30	20	30	37	55	55
			Thermal	20	10	20	20	30	30

* Nozzle loads for these bubblers due to hydrogen accumulation are not available and will be provided later.

TABLE 4

PRELIMINARY Nozzle Loads on Non-Black Cell Vessels Designated as SC-1							
Pipe Size	Load Type	Forces			Moments		
		Fx (lb)	Fy (lb)	Fz (lb)	Mx (ft-lb)	My (ft-lb)	Mz (ft-lb)
1 in	Weight	15	20	15	20	20	20
1 in	Seismic	45	30	45	56	83	83
1 in	Thermal	30	26	40	38	77	77
1-1/2 in	Weight	35	45	35	40	40	40
1-1/2 in	Seismic	90	60	90	137	206	206
1-1/2 in	Thermal	64	56	86	96	192	192
2 in	Weight	50	60	50	75	75	75
2 in	Seismic	159	105	159	237	356	356
2 in	Thermal	114	100	152	169	337	337
3 in	Weight	69	111	69	158	99	99
3 in	Seismic	323	215	323	935	1401	1401
3 in	Thermal	228	203	305	664	1330	1330
4 in	Weight	116	186	116	288	180	180
4 in	Seismic	548	365	548	1755	2640	2640
4 in	Thermal	393	350	524	1260	2520	2520
6 in	Weight	279	446	279	797	498	498
6 in	Seismic	1326	885	1326	4845	7275	7275
6 in	Thermal	980	872	1310	3580	7160	7160
8 in	Weight	311	497	311	988	618	618
8 in	Seismic	1467	980	1467	5895	8835	8835
8 in	Thermal	1190	1060	1590	4800	9590	9590
10 in	Weight	351	561	351	1880	1180	1180
10 in	Seismic	1635	1092	1635	11010	16500	16500
10 in	Thermal	1270	1130	1690	8500	17000	17000
12 in	Weight	485	776	485	2710	1700	1700
12 in	Seismic	2265	1515	2265	15750	23700	23700
12 in	Thermal	1780	1580	2370	12400	24800	24800
14 in	Weight	581	930	581	3320	2080	2080
14 in	Seismic	2700	1800	2700	18900	28350	28350
14 in	Thermal	2140	1900	2860	15000	30100	30100
16 in	Weight	729	1170	729	4170	2610	2610
16 in	Seismic	3420	2280	3420	24150	36300	36300
16 in	Thermal	2800	2490	3730	19800	39500	39500
18 in	Weight	911	1460	911	5070	3170	3170
18 in	Seismic	4230	2820	4230	30000	44850	44850
18 in	Thermal	3550	3160	4730	25200	50300	50300
20 in	Weight	1120	1790	1120	6310	3950	3950
20 in	Seismic	5100	3405	5100	35850	53700	53700
20 in	Thermal	4440	3950	5920	31200	62400	62400
22 in	Weight	1340	2150	1340	7300	4560	4560
22 in	Seismic	6045	4035	6045	42150	63300	63300
22 in	Thermal	5430	4830	7240	37900	75800	75800
24 in	Weight	1570	2510	1570	8510	5320	5320
24 in	Seismic	7065	4710	7065	48600	73050	73050
24 in	Thermal	6560	5840	8750	45200	90400	90400

TABLE 5: FEP/TLP Reboiler Steam Design Nozzle Loads

Reboiler Vessel ID Number	Nozzle Number	Calculation Number	Load Case	Reboiler Steam Nozzle Design Loads					
				Fx (lb)	Fy (lb)	Fz (lb)	Mx (ft-lb)	My(ft-lb)	Mz (ft-lb)
FEP-RBLR-00001A	N03	24590-PTF-P61C-FEP-00015	WT01	55	-1500	-238	-5750	4974	-5670
			OCC	6023	8655	1823	11131	2714	2101
			THRM01	-318	-261	-211	-6381	5289	510
FEP-RBLR-00001B	N03	24590-PTF-P61C-FEP-00015	WT01	-16	-1036	93	-1029	343	246
			OCC	5761	15950	1181	10124	4741	3286
			THRM01	-1285	1069	-73	-1230	1208	1243
TLP-RBLR-00001	N03	24590-PTF-P61C-TLP-00007	WT01	-174	3798	-70	-285	896	6518
			OCC	3283	3484	3728	15635	2205	5629
			THRM01	-2071	5003	253	3144	-53	6870

NOTES:

- Load direction per 24590-WTP-3PS-MV000-T0001, APPENDIX A.
- Tabulated loads are from ME101 analyses results with 25% increase factor for design purposes.
- Seismic loads considered the new ISRS, 5% damping and Modal Sum by CQC. Applied **Fμ** is unity.
- Ref. CCN 110509

ATTACHMENT #5

Design Concepts

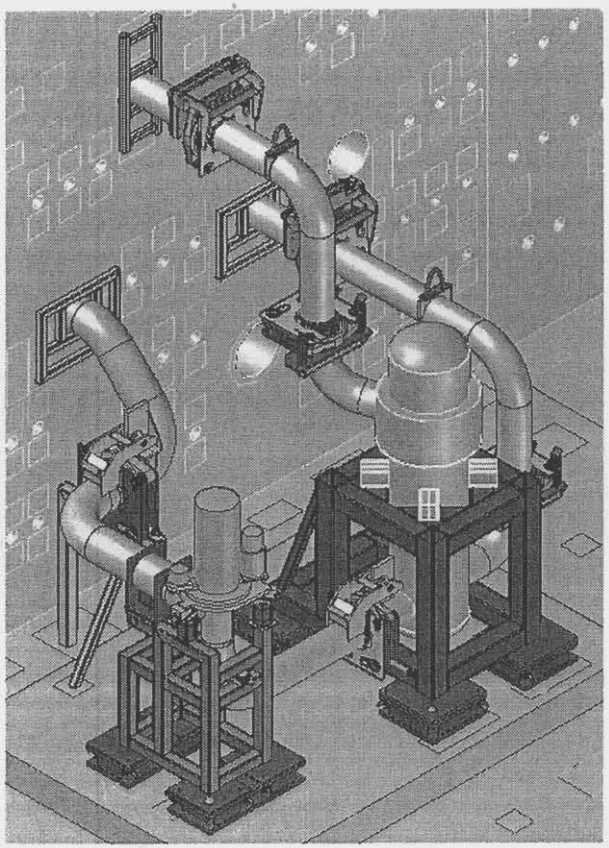

Area 9
CNP

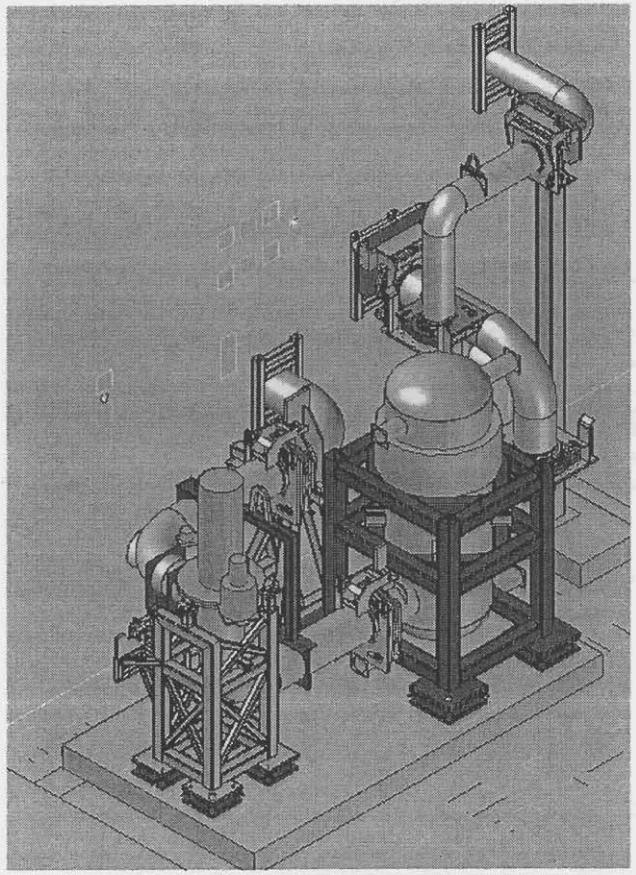

Area 17
TLP

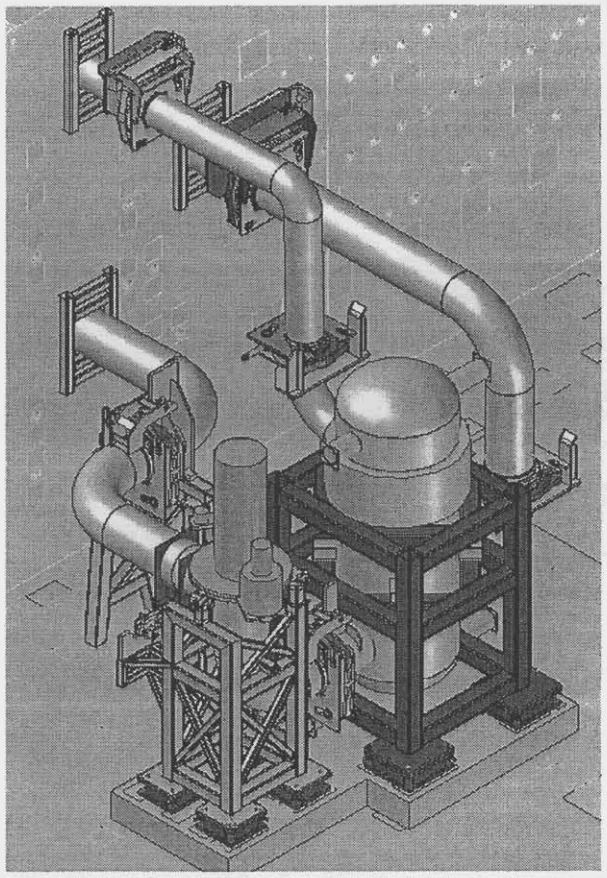

Area 26/27
FEP

Assumptions

- Top of concrete pad elevation will be 1'-4"
- Concrete pad will be rigid, e.g. 33 hz
- Bottom of Pump and Reboiler frames/top of remote interface will be 2'-2". With the exception of the FEP and TLP Reboilers, which will be 2'-2 5\16".
- AREVA will qualify Structural steel between 1'-4" and 2'-2", BNI will be responsible for remotability interface and fabrication drawings. Structural members will be same size as Reboiler and Pump frames or larger, see attached.
- There will be two 4" Dowel Pins per frame (opposing corners) as shown on drawings which will take the sheer loads.

Assumptions

- AREVA to qualify all plates, structural steel, dowel pins and the bolting interface.
- Initial assumption, bolts will be 1.25" diameter with two bolts per plate. Final diameter / quantity will be determined by analysis. Note: Max available torque from impact wrench is 400 ft-lbs
- AREVA to determine final dowel pin diameter and final number of bolts required. Note: Two dowel pins are required due to remote handling constraints.
- AREVA to qualify pump frame, BNI will be responsible for remotability interface and fabrication drawings.

Area 17 (TLP)
Design Concepts

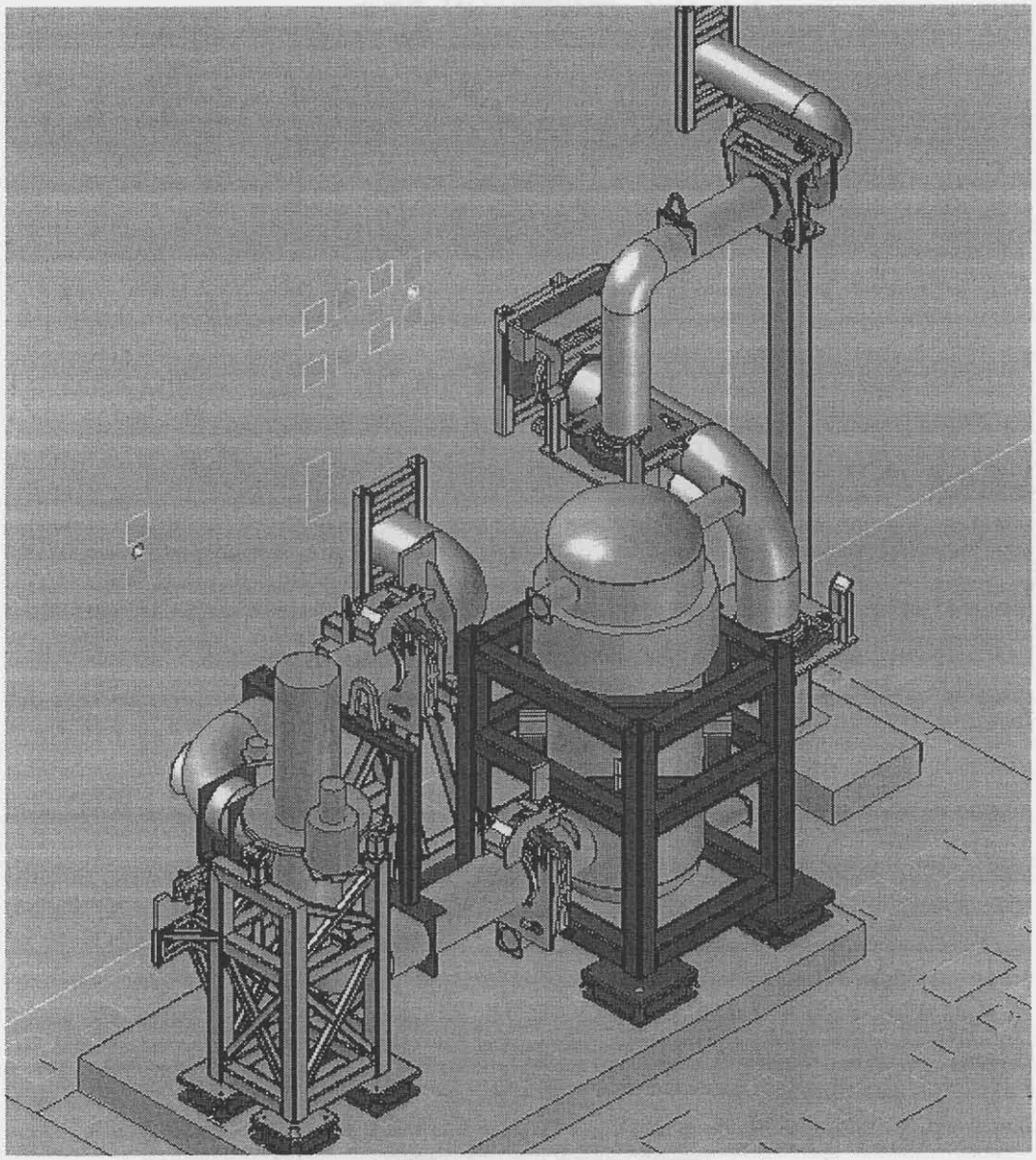

Current Layout

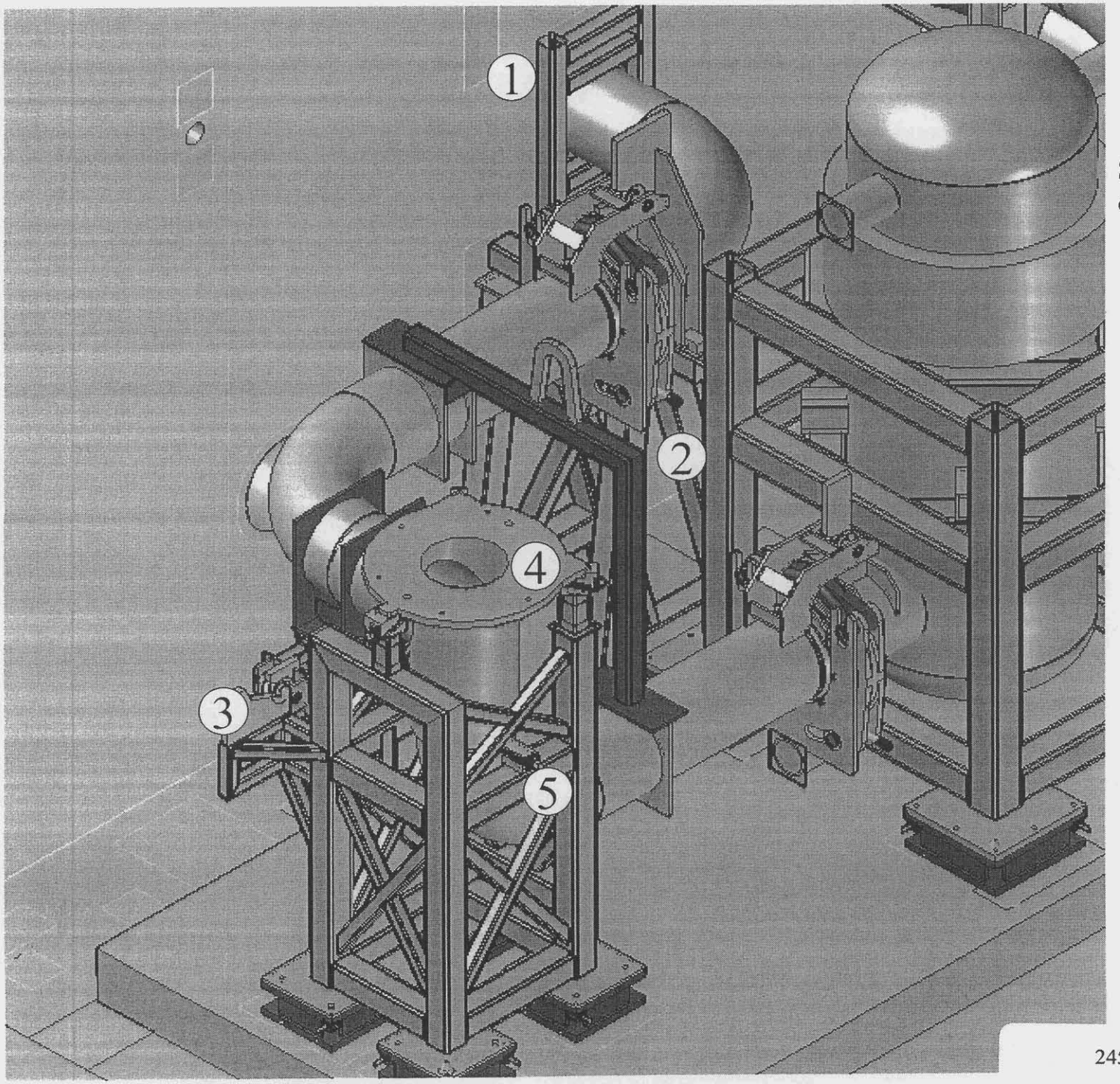

Proposed Support Configuration (TLP)

See corresponding details on following slides.

TLP

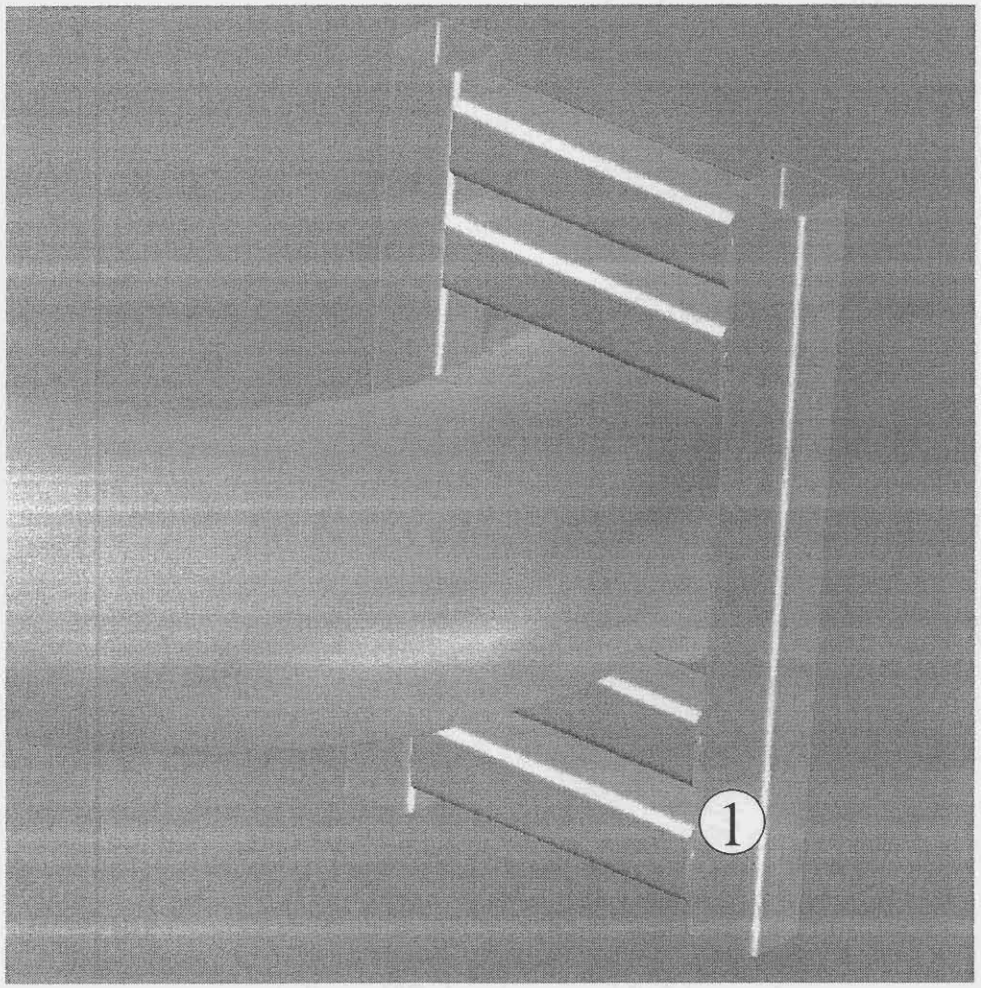

Guide supports at face of hot cell wall

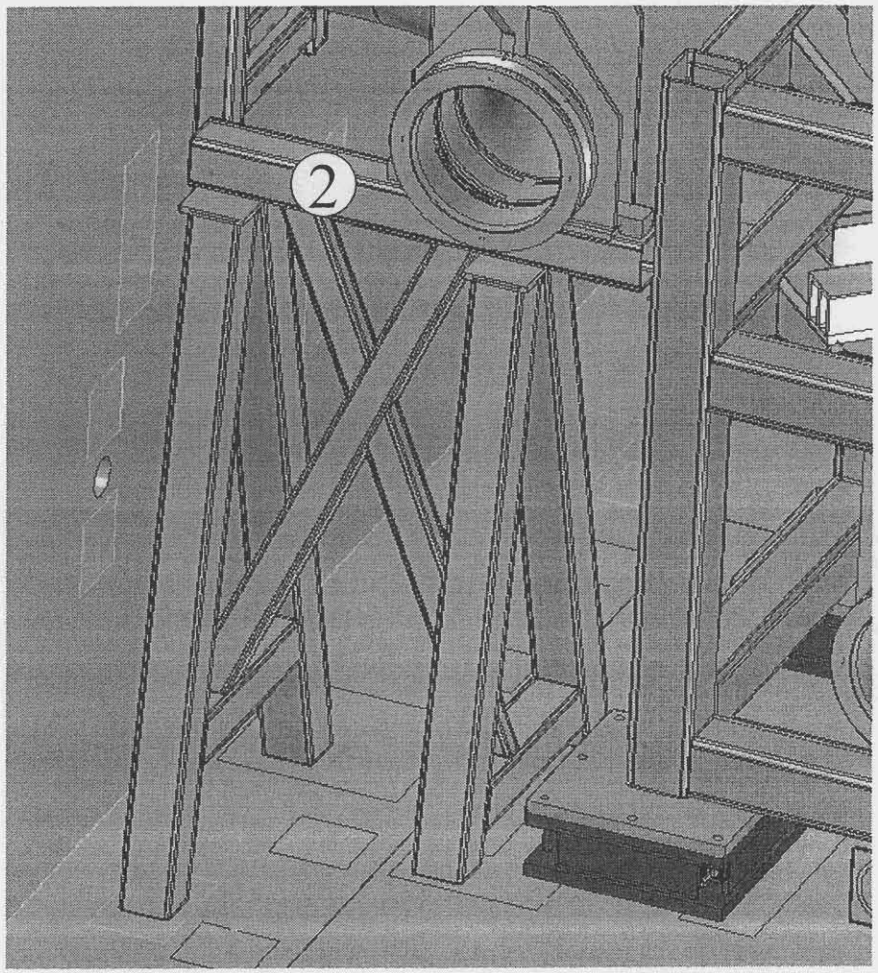

Guide support on back side of wall Grayloc hub.

TLP

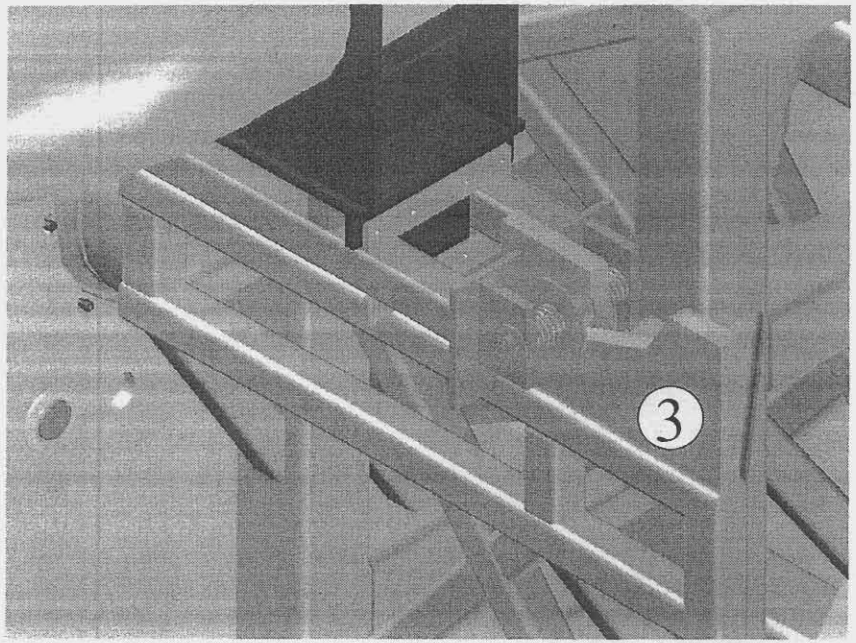

Midroller support

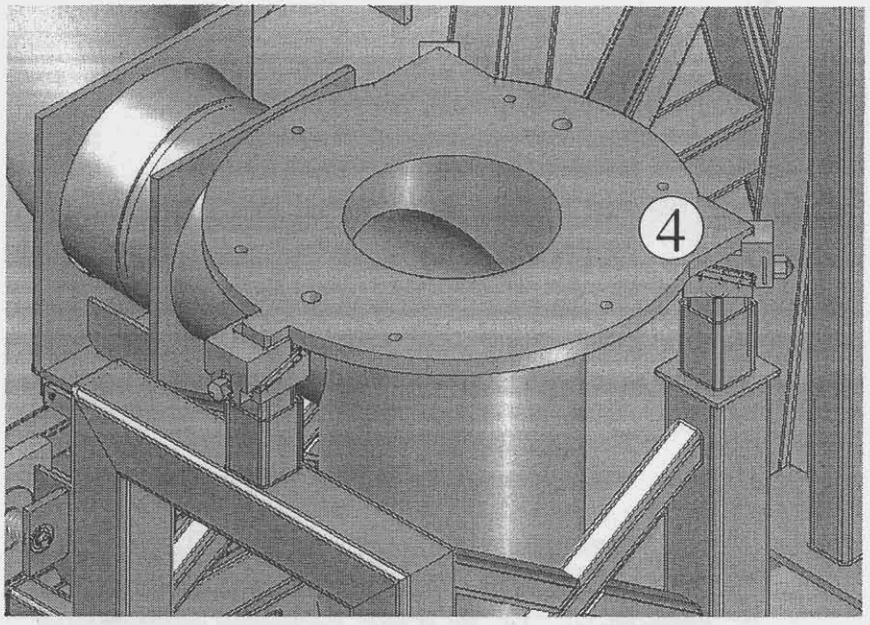

Three point pump support at pump flange.

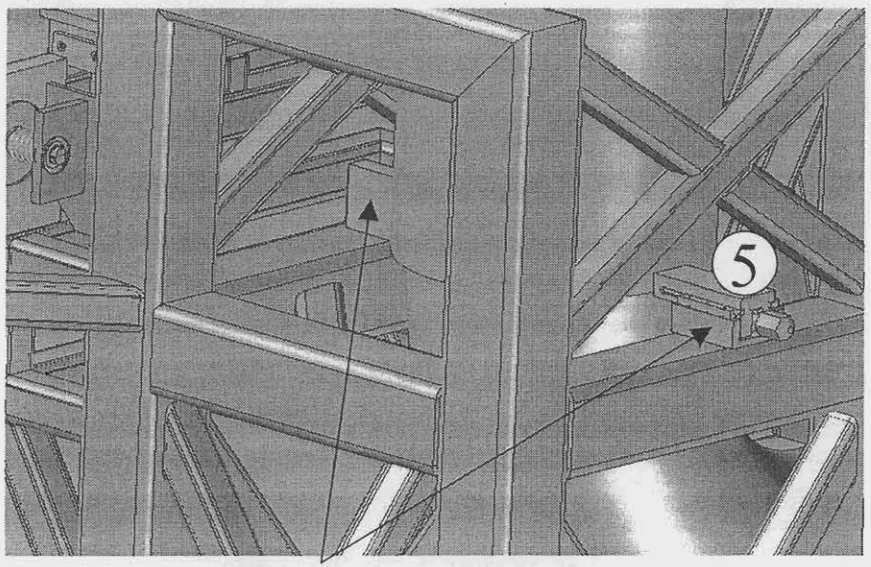

Pump discharge nozzle support.
(only if required by analysis)

TLP Layout

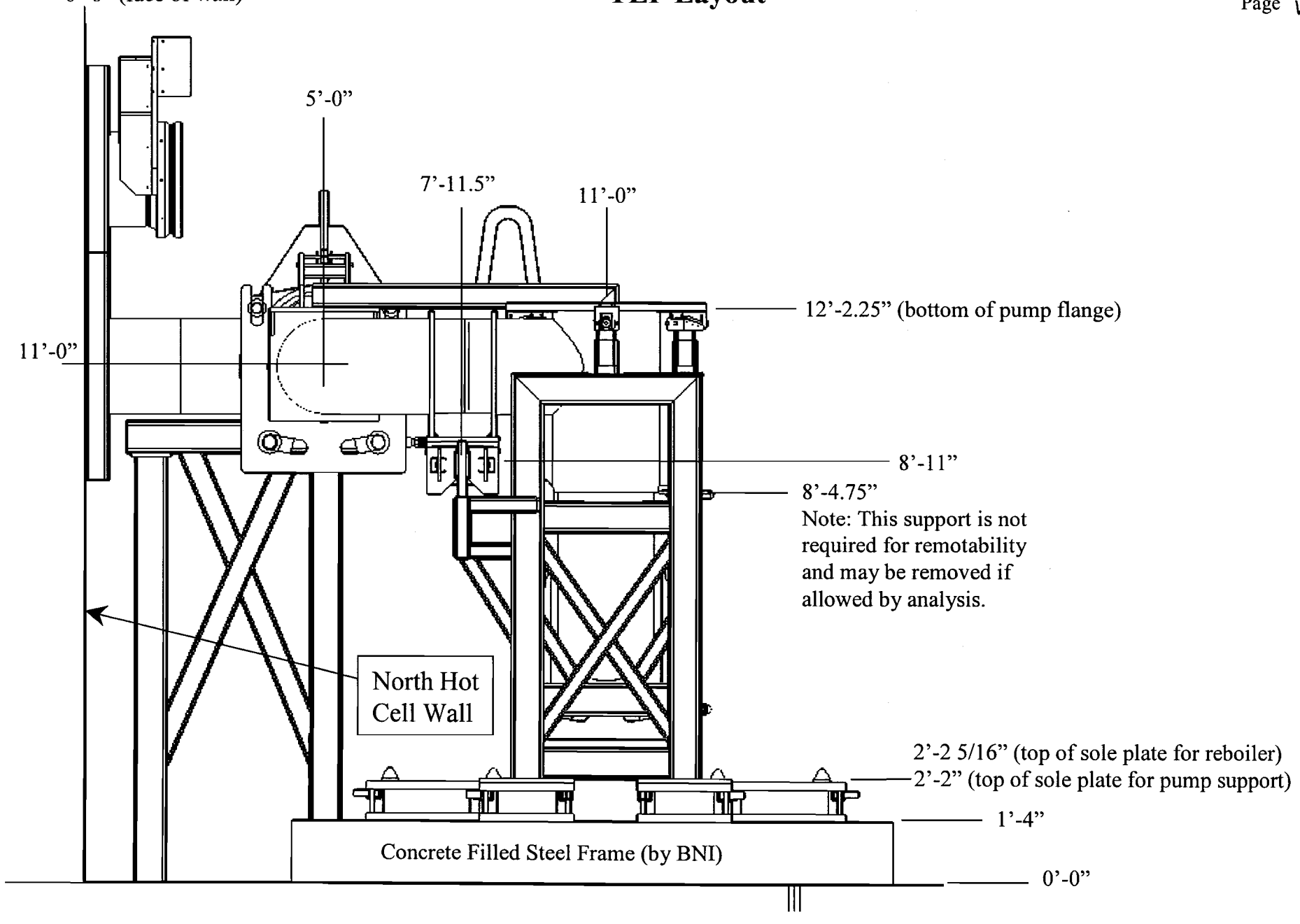

Elevation View (looking east)

TLP Layout

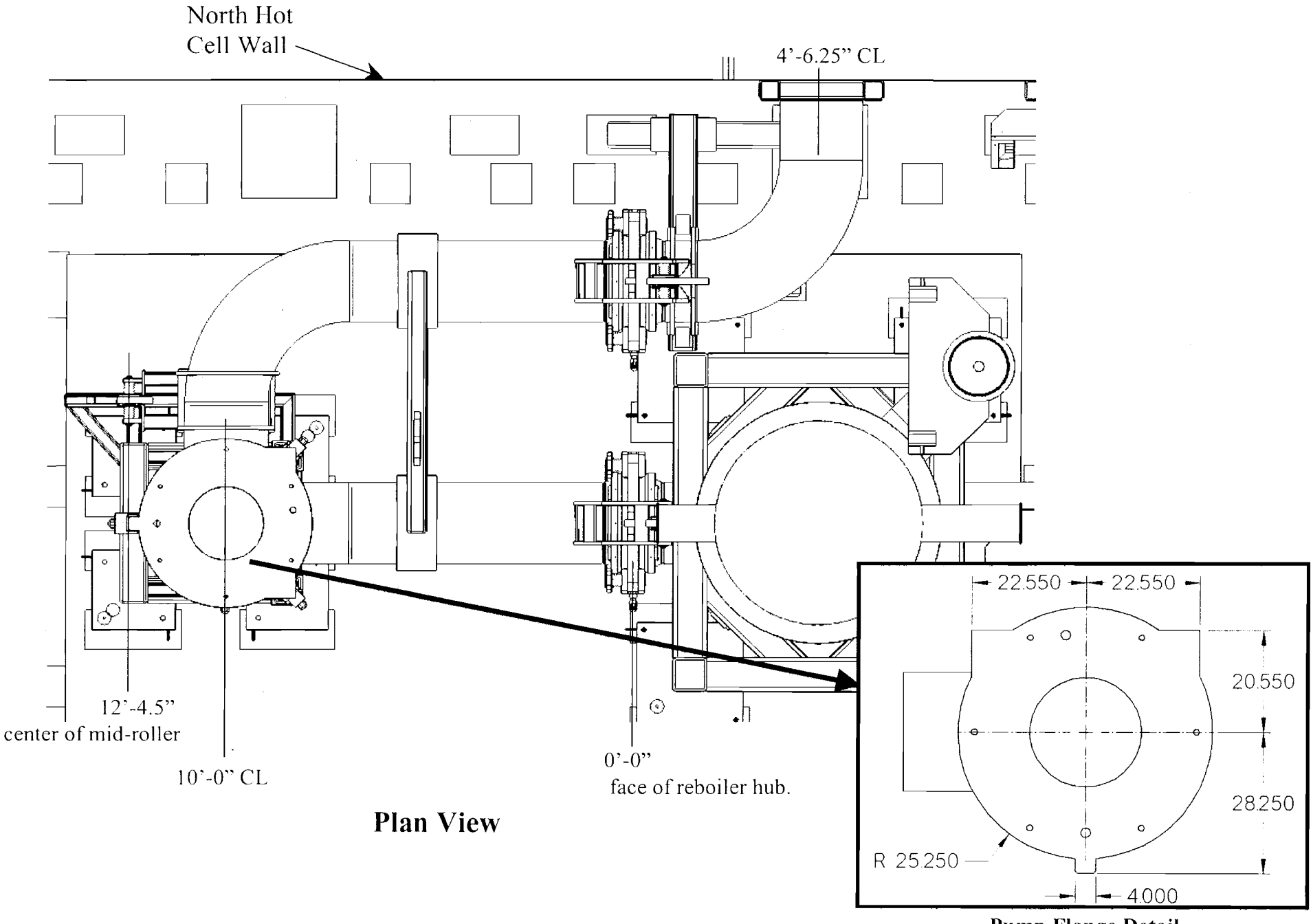

Plan View

Pump Flange Detail

Pump Support Frame (TLP)

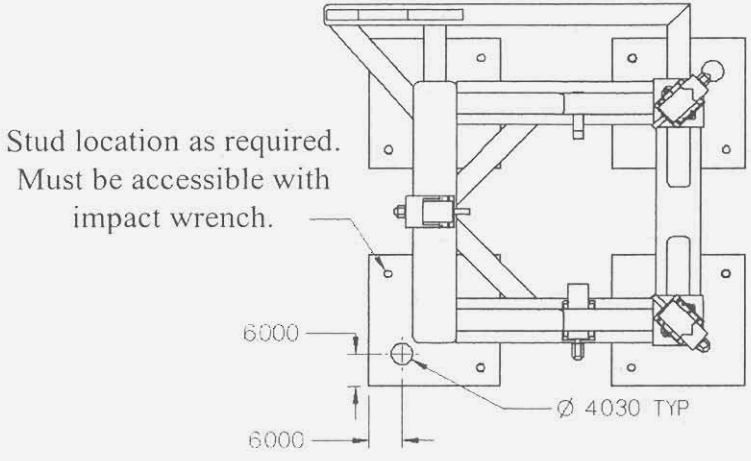

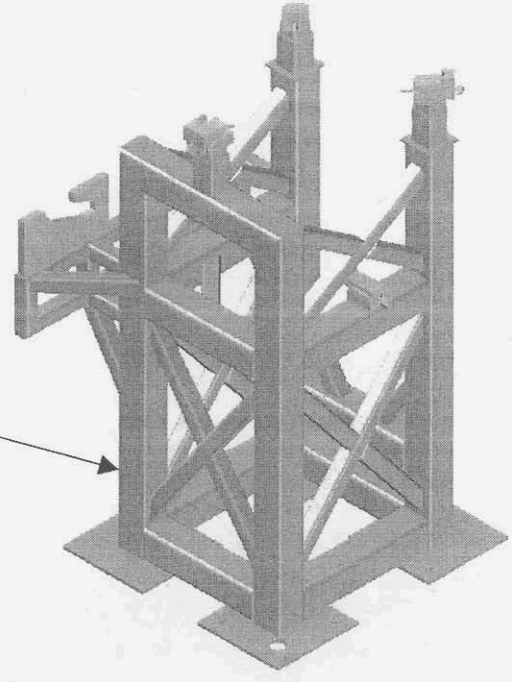

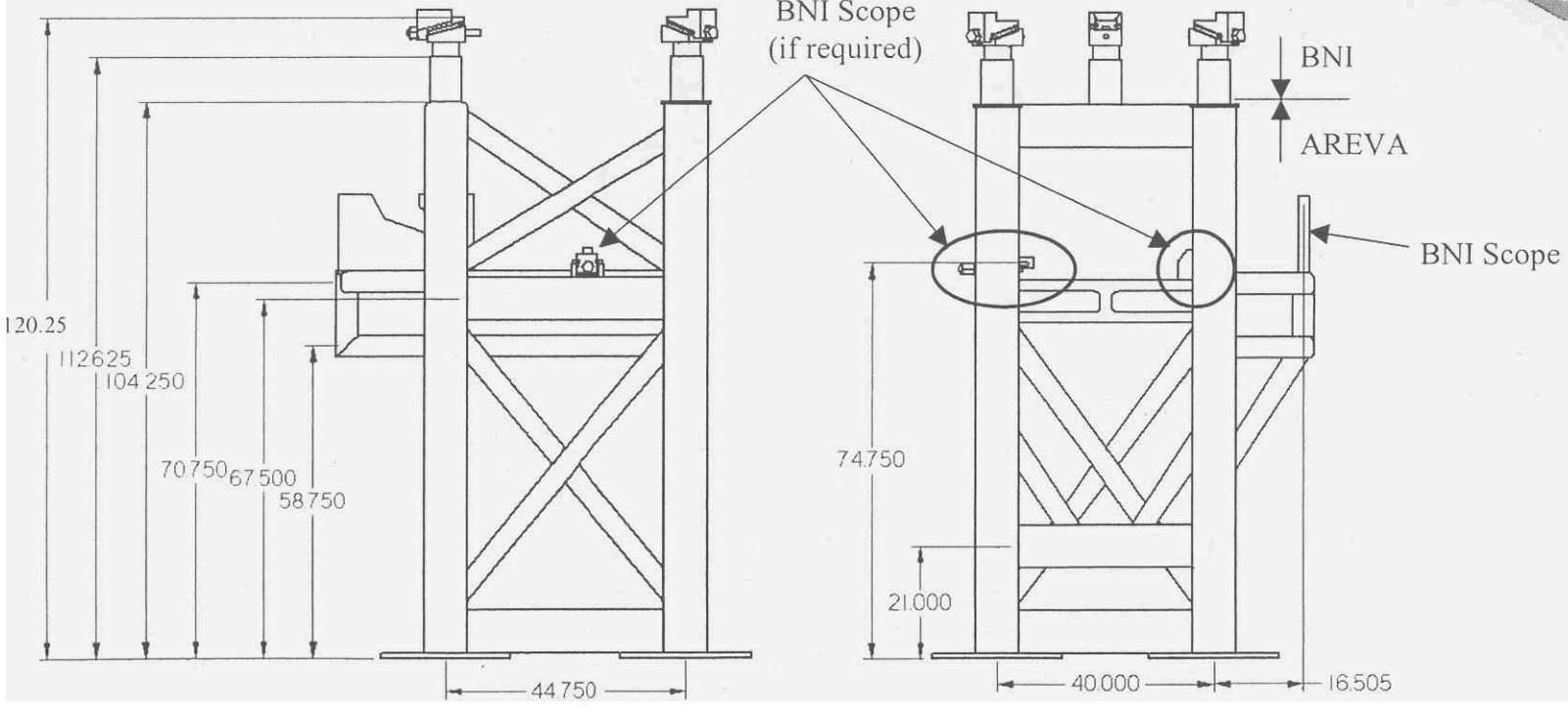

Equipment Pad and Sole Plates (TLP)

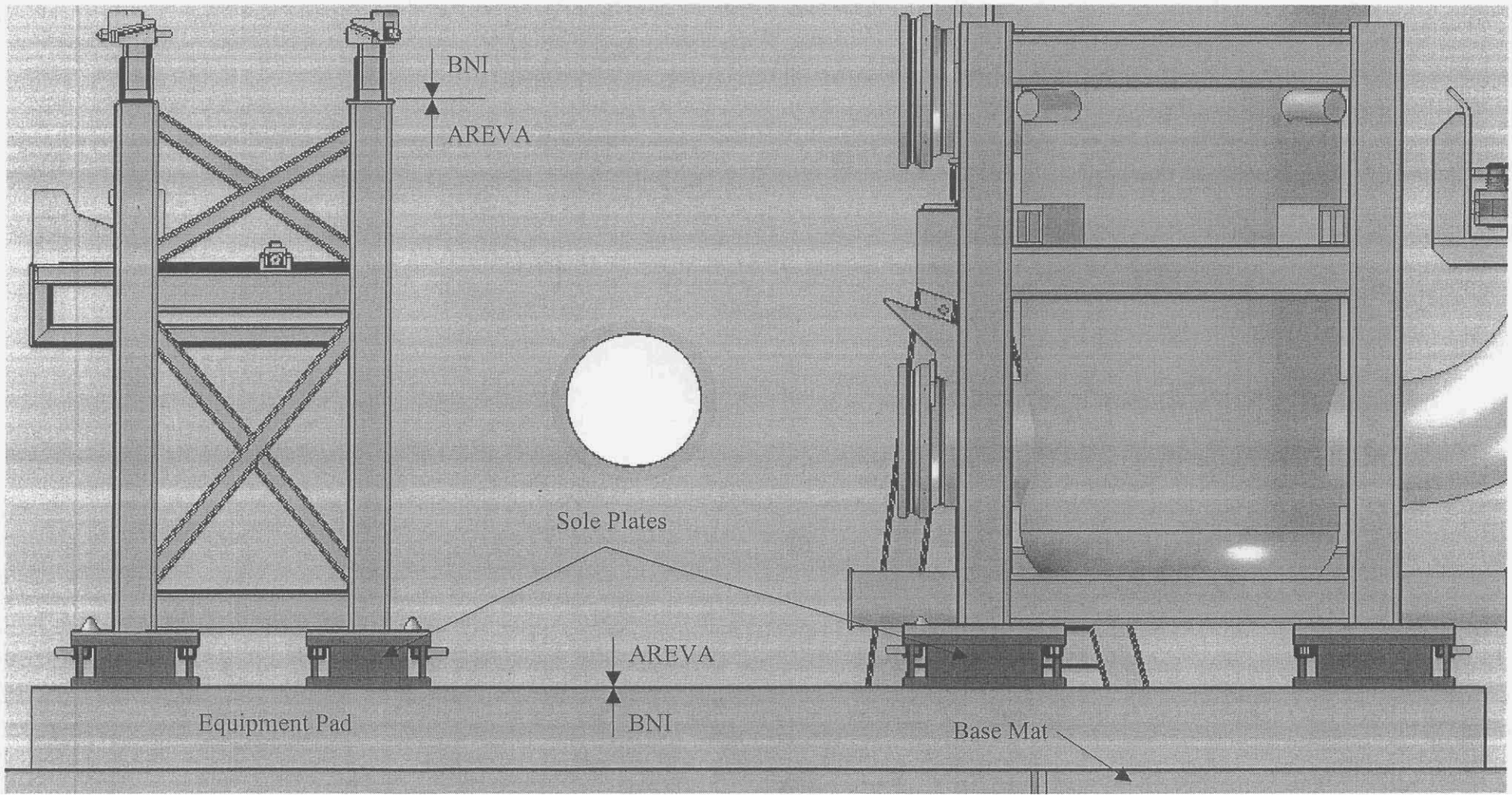

Sole Plates (TLP)

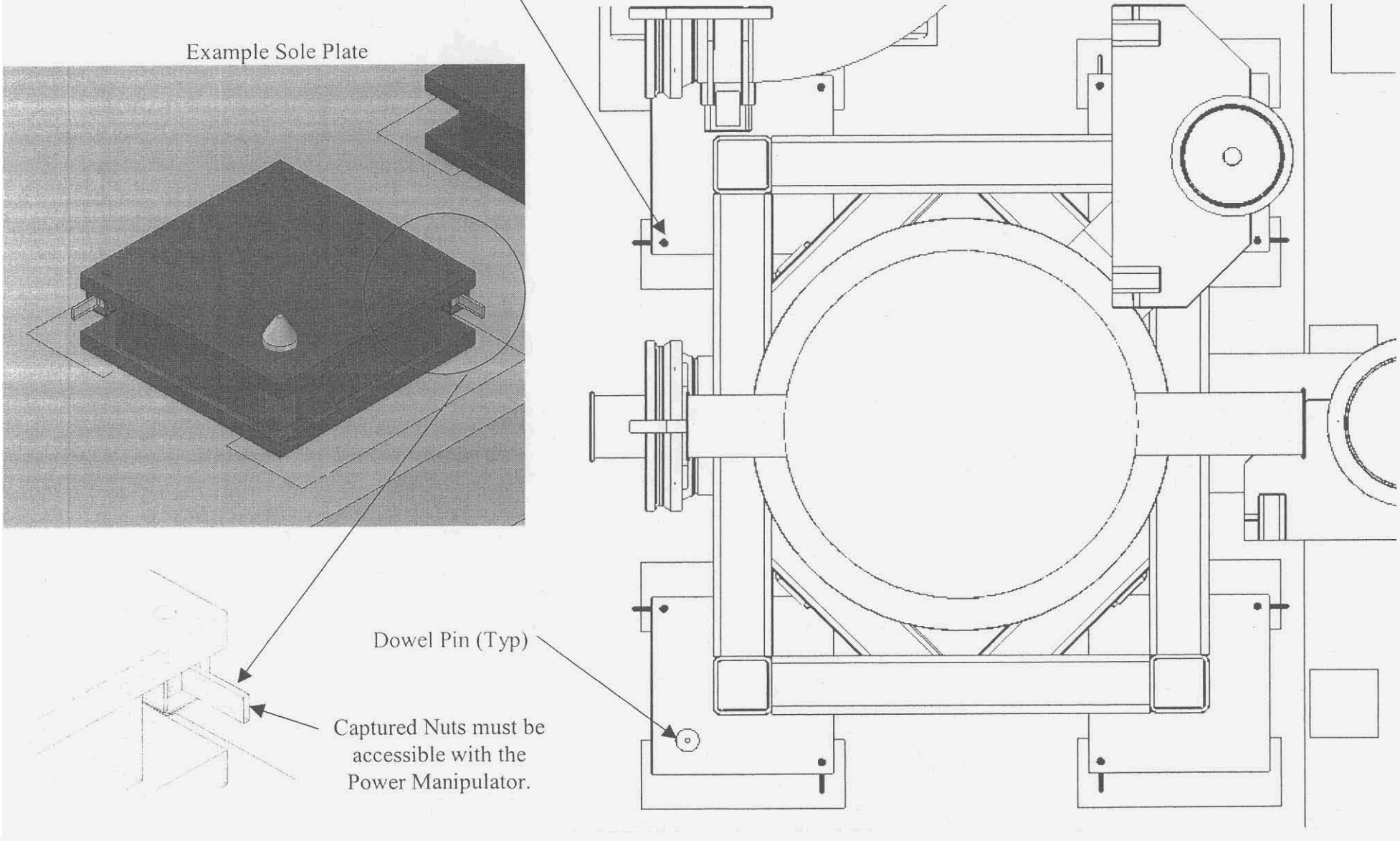

TLP

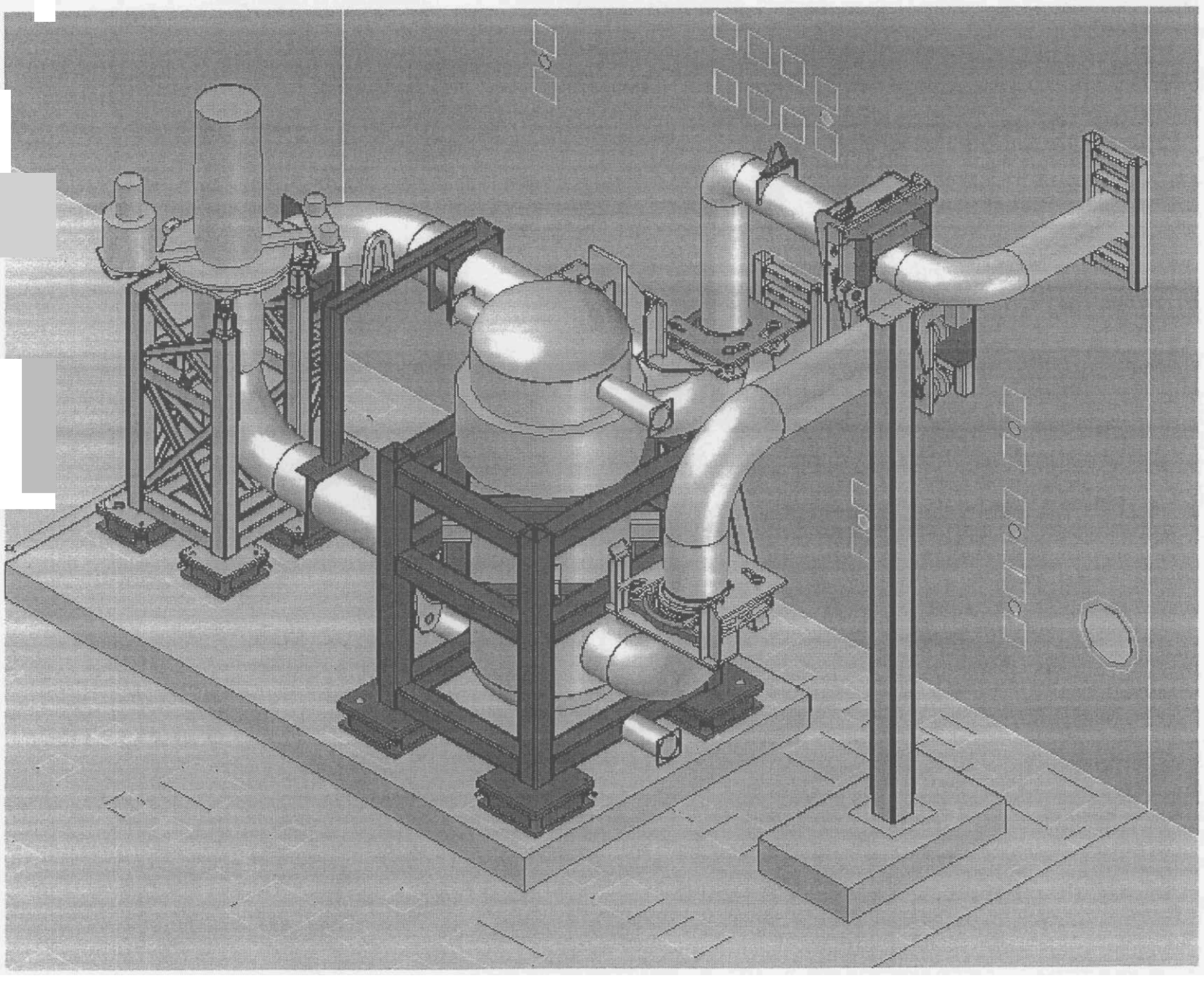

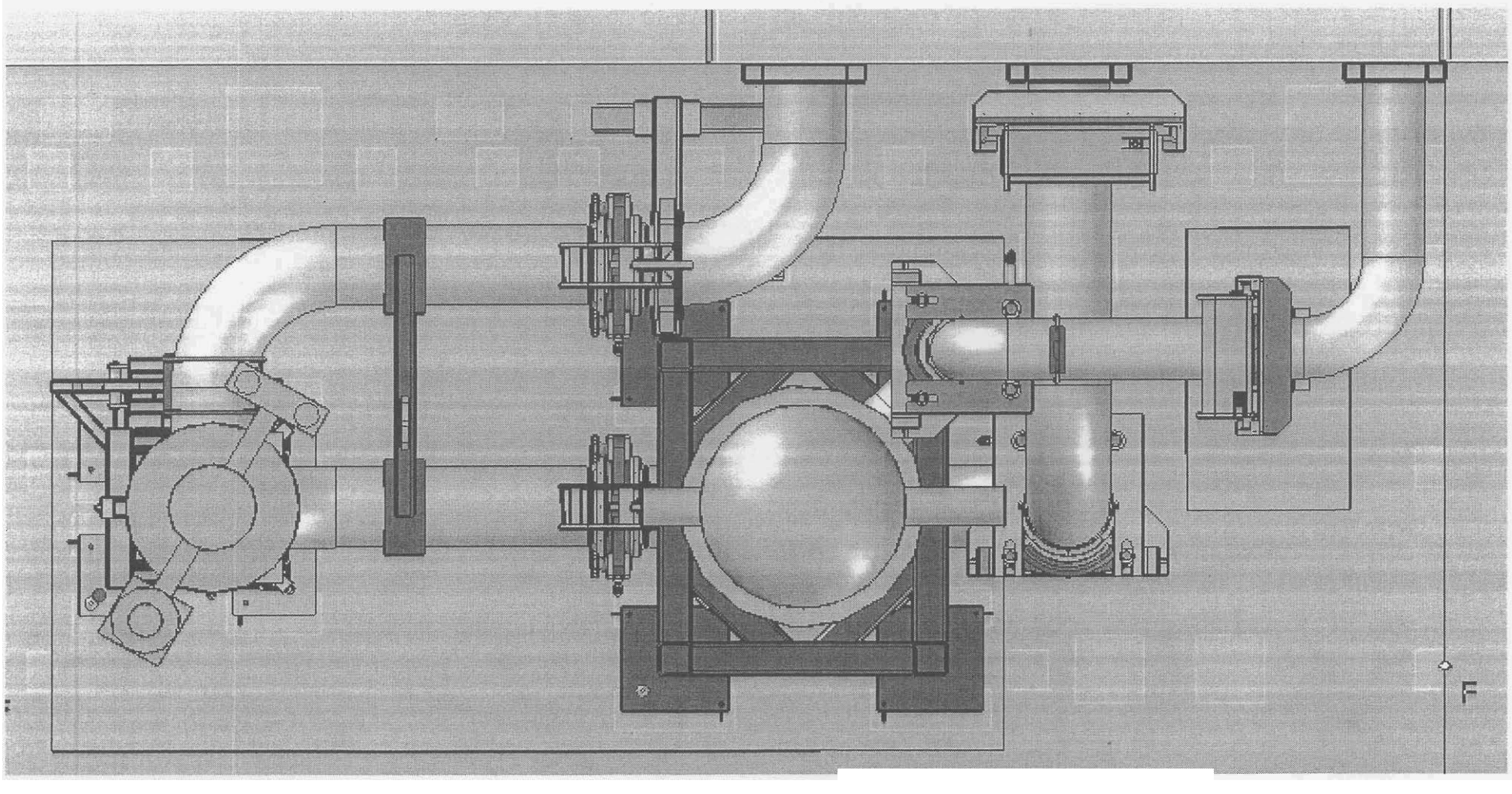
F

TLP

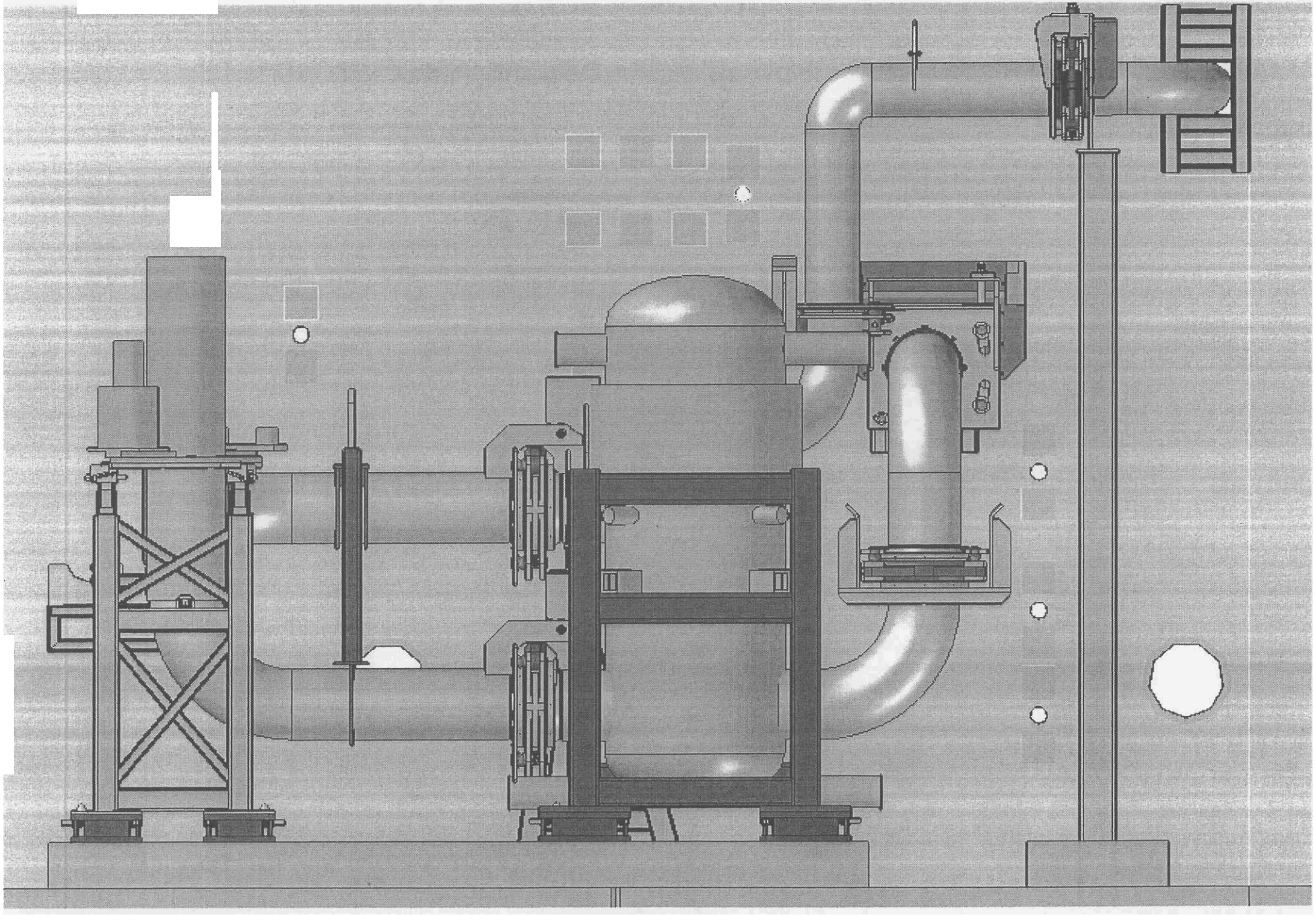

Area 26/27 (FEP)
Design Concepts

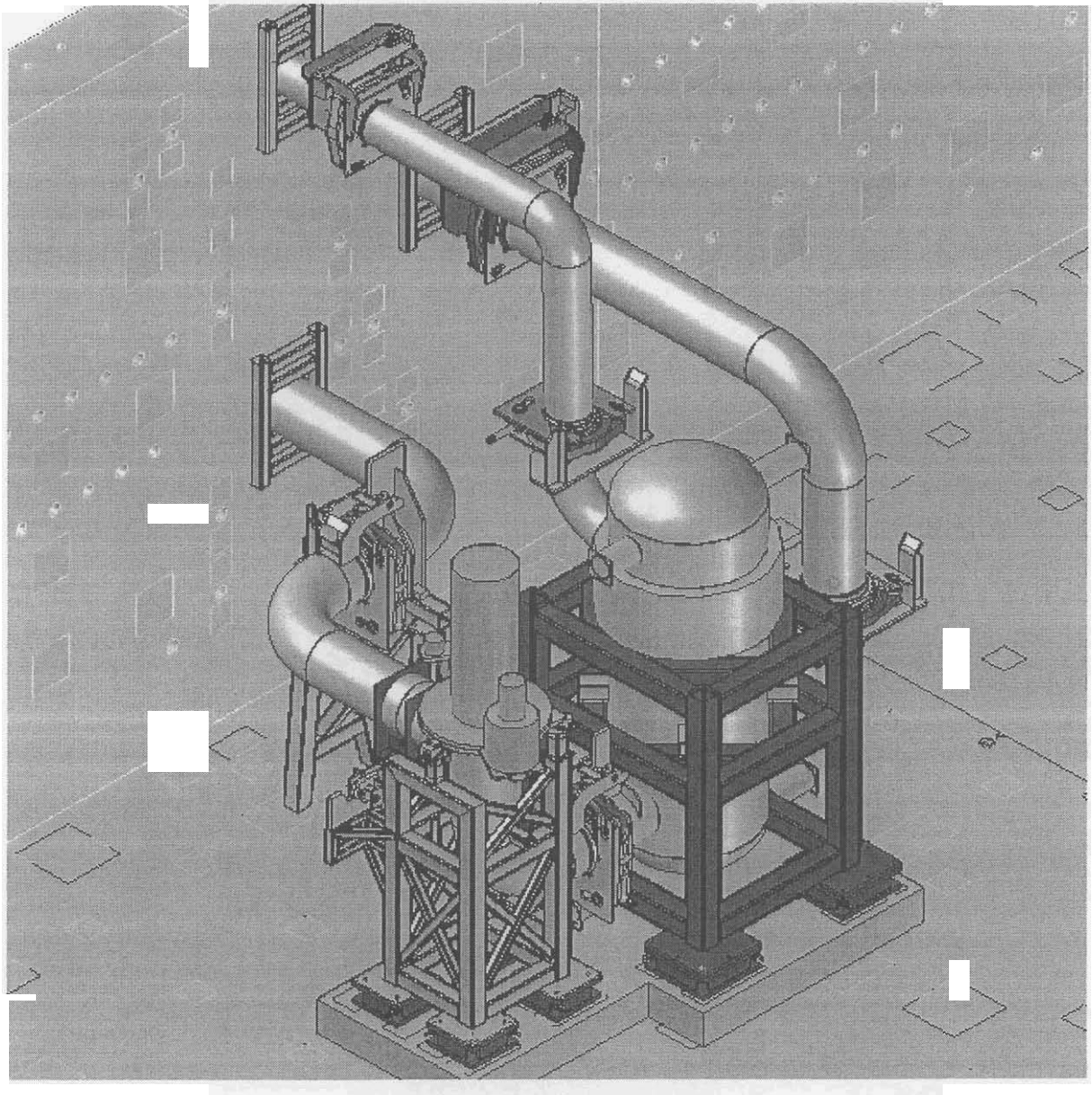

Current Layout

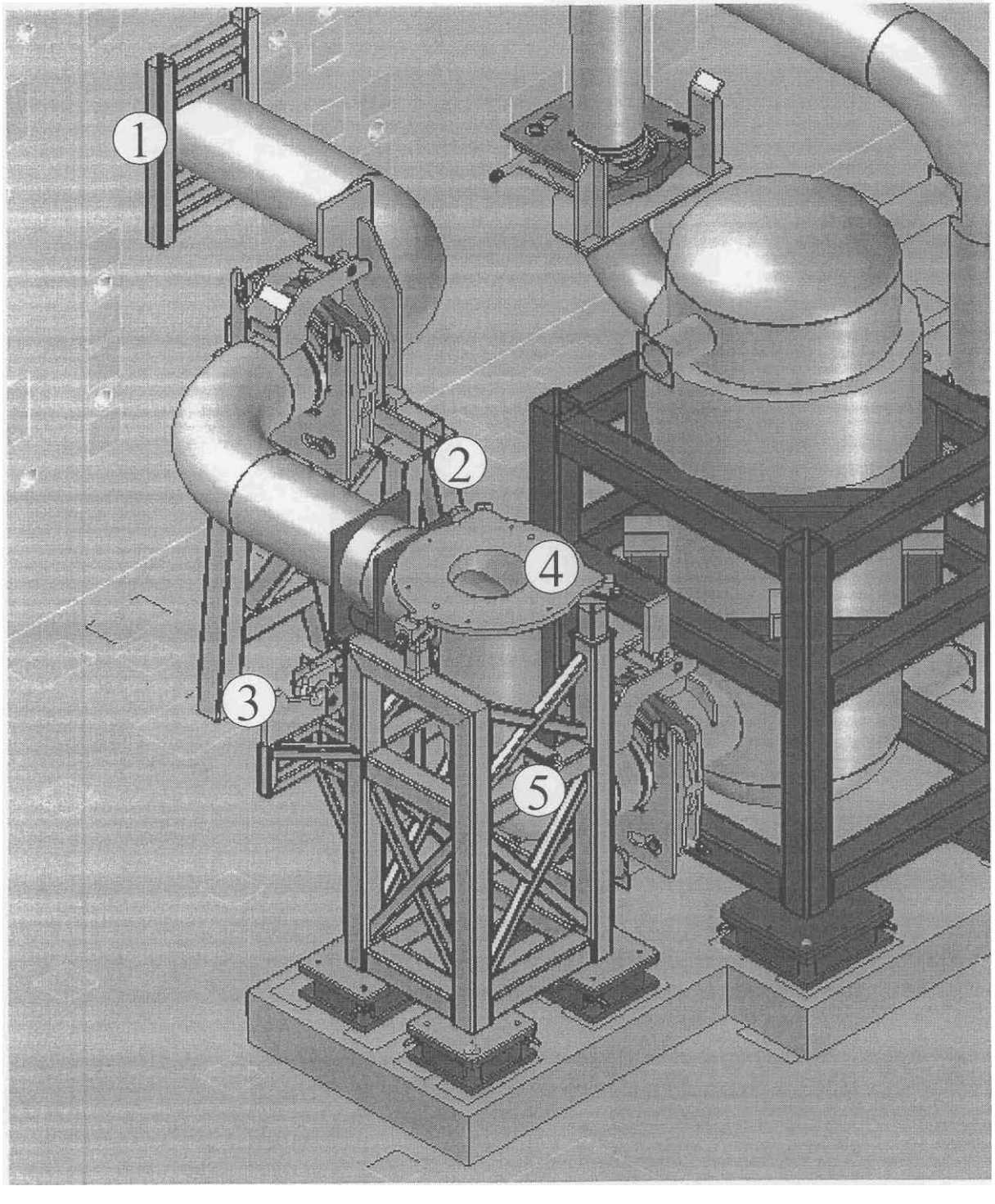

Proposed Support Configuration (FEP)

See corresponding details on following slides.

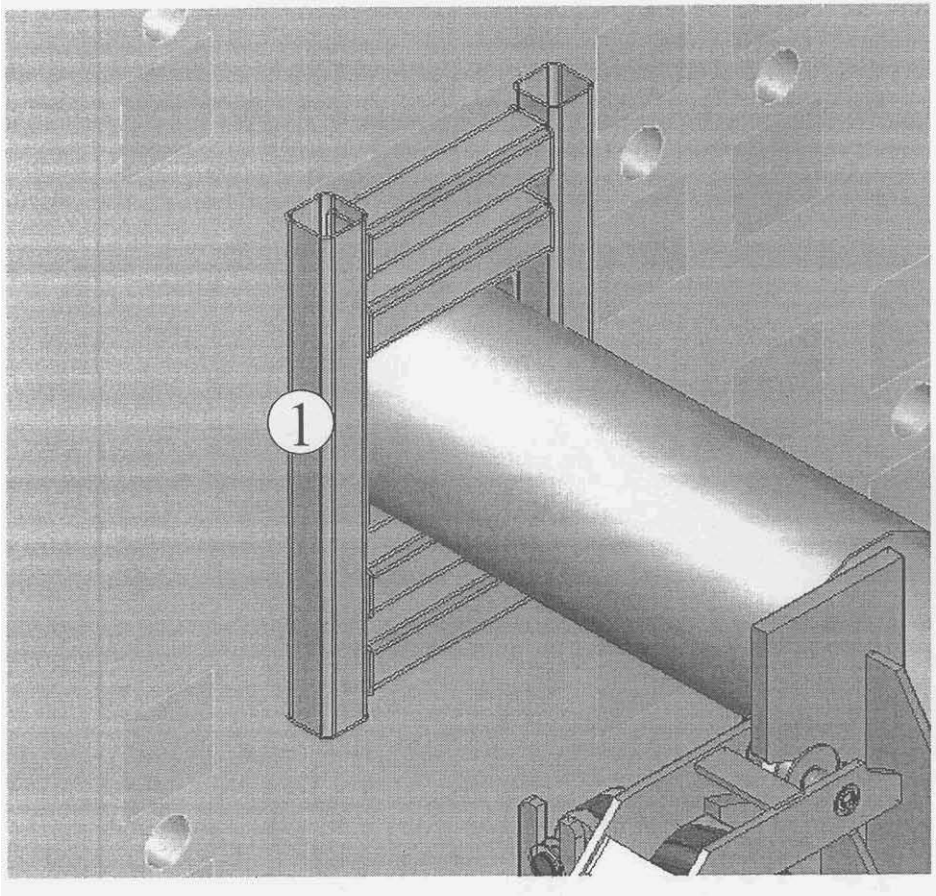

Guide supports at face of hot cell wall

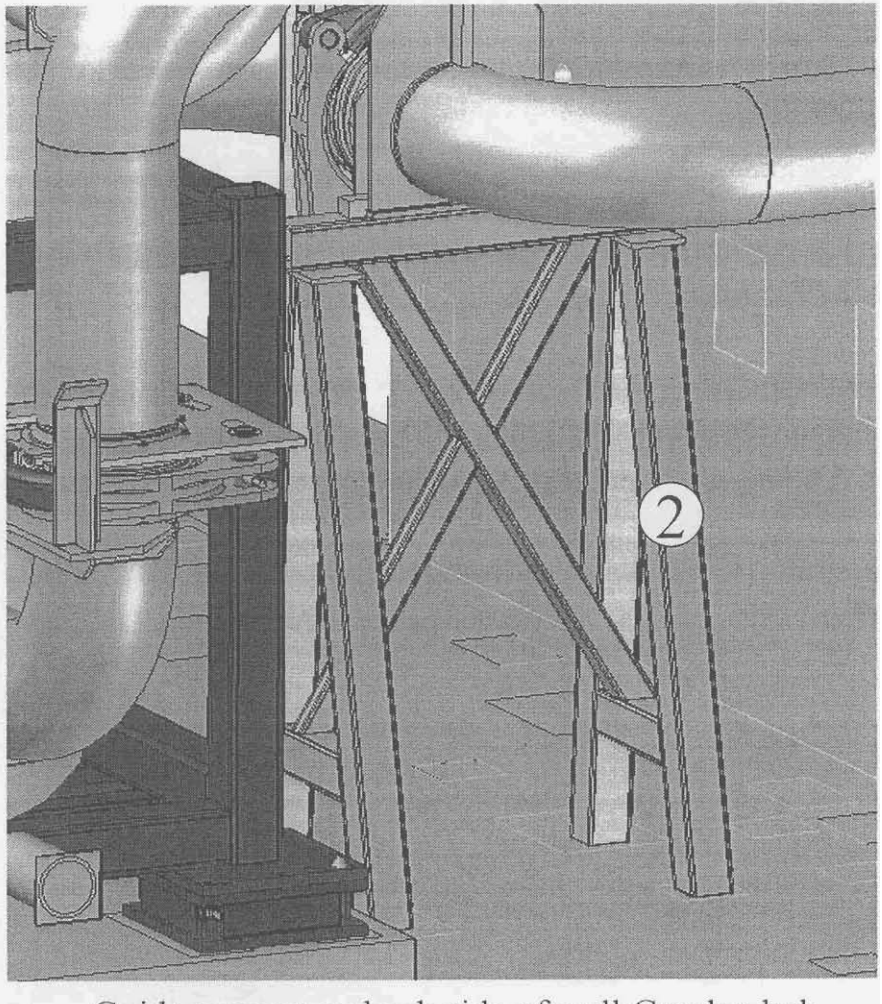

Guide support on back side of wall Grayloc hub.

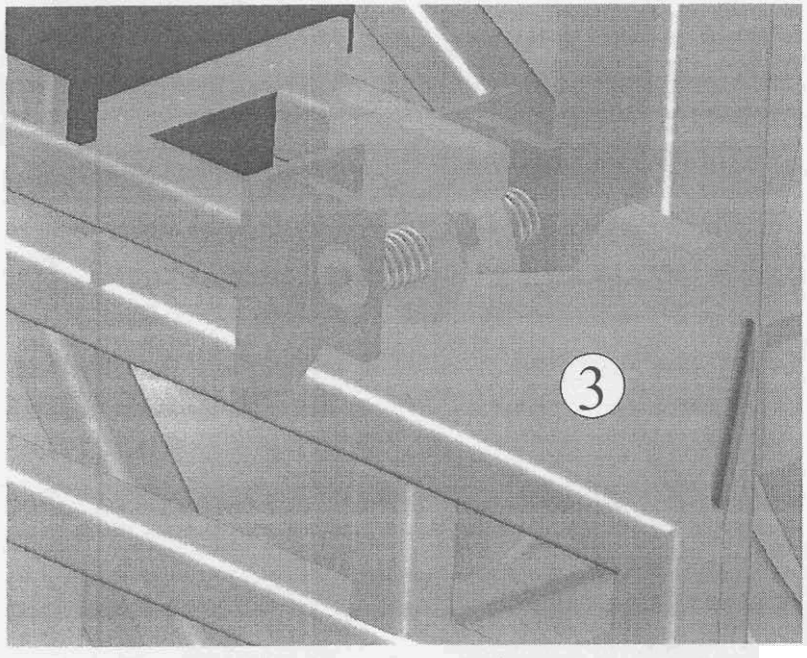

Midroller support

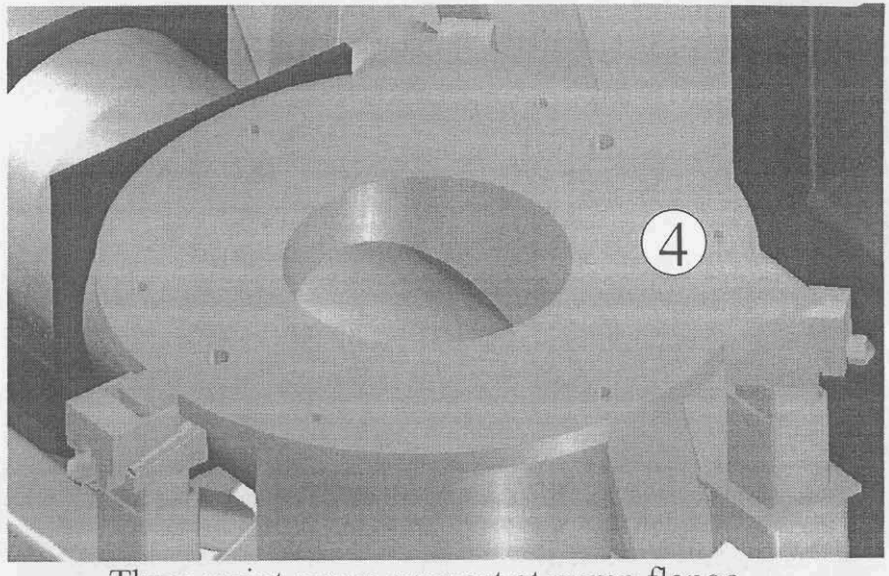

Three point pump support at pump flange.

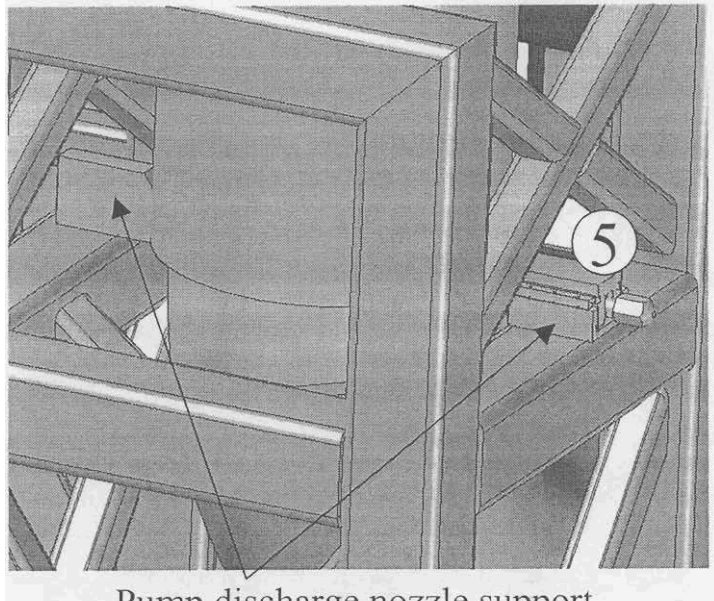

Pump discharge nozzle support.
(only if required by analysis)

FEP Layout

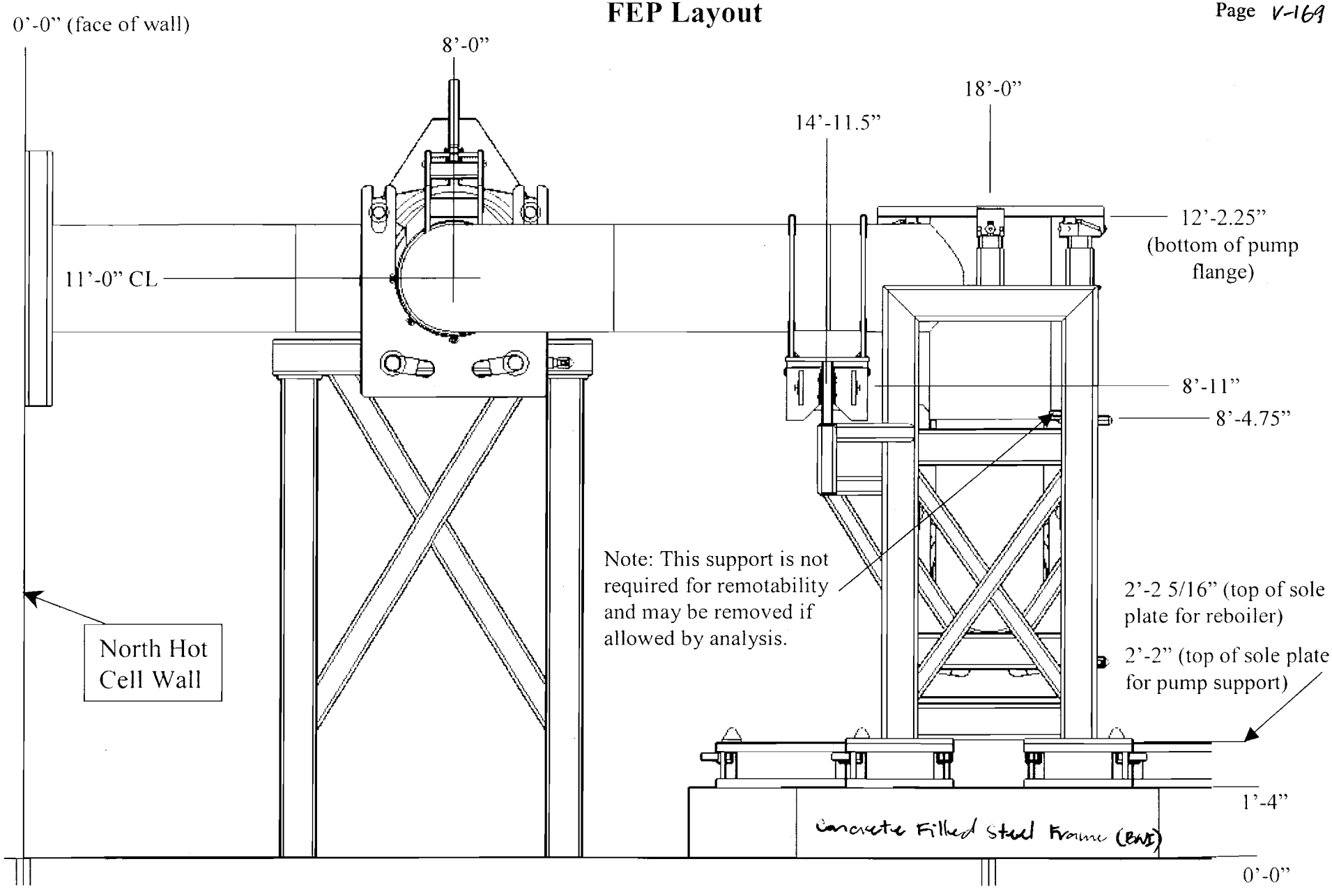

Elevation View (looking west)

FEP Layout

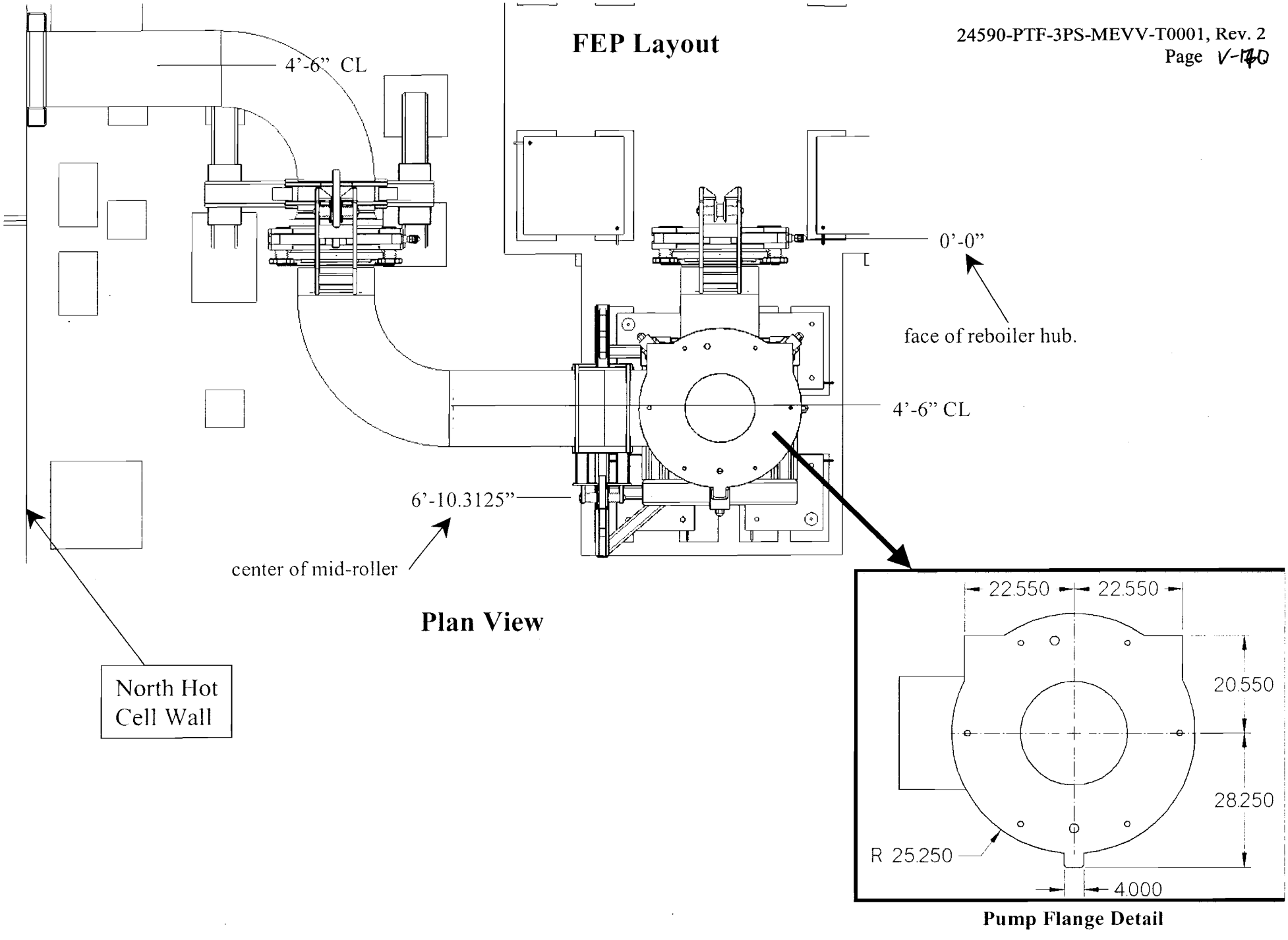

Plan View

Pump Flange Detail

Pump Support Frame
(FEP)

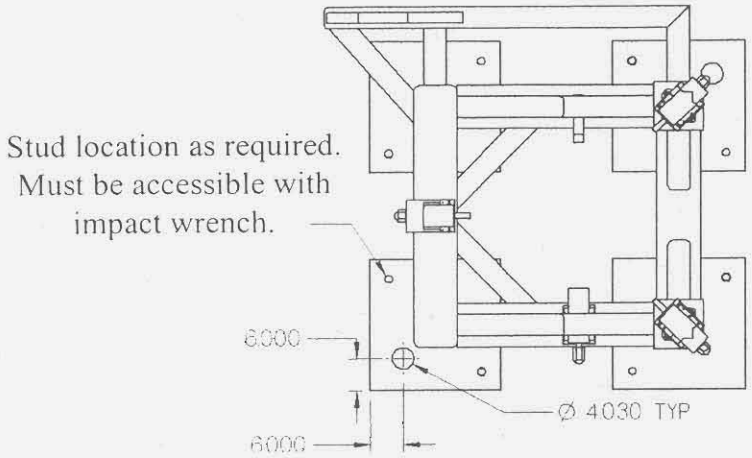

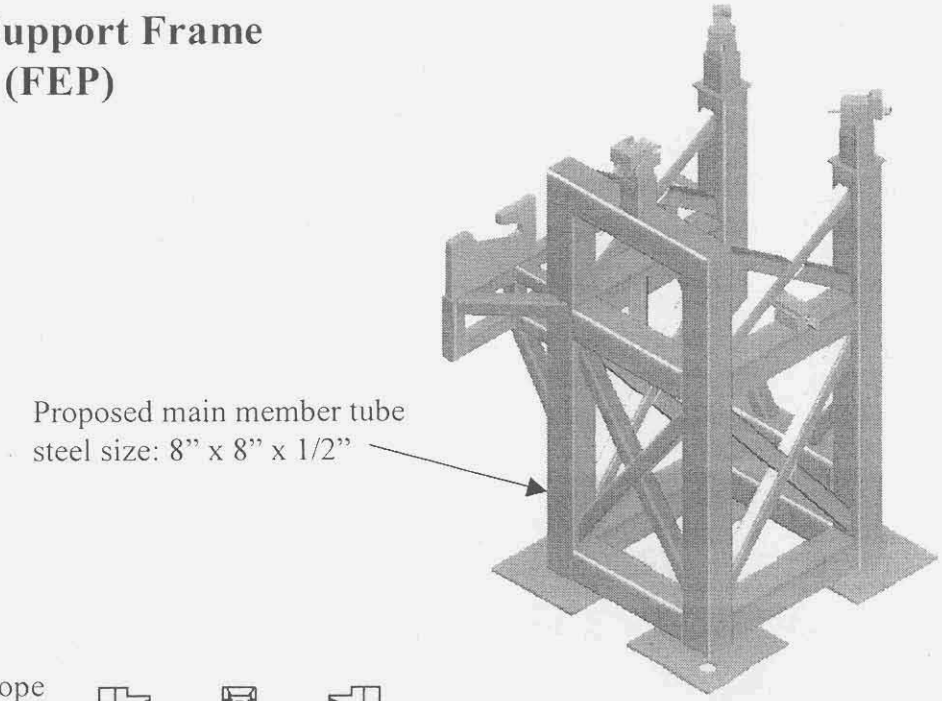

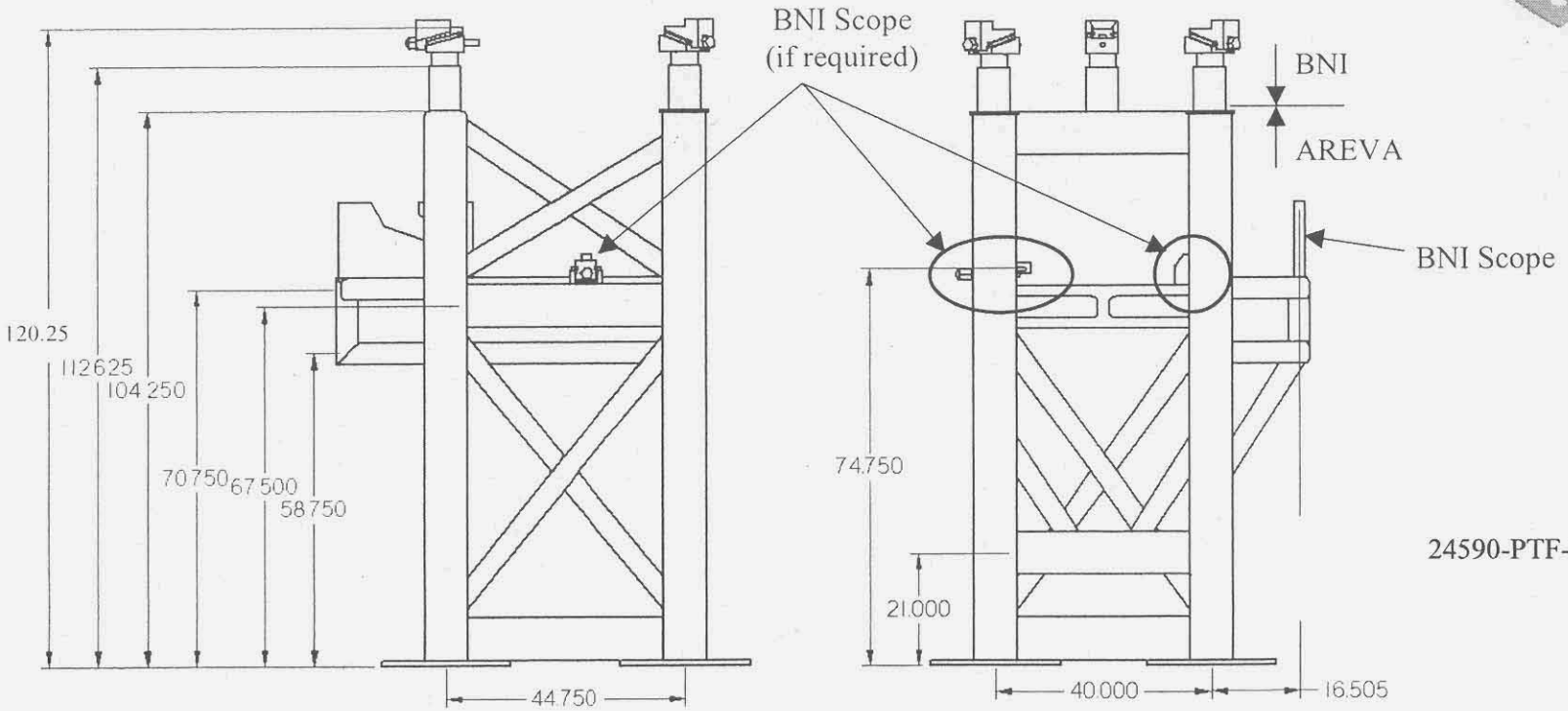

Equipment Pad and Sole Plates (FEP)

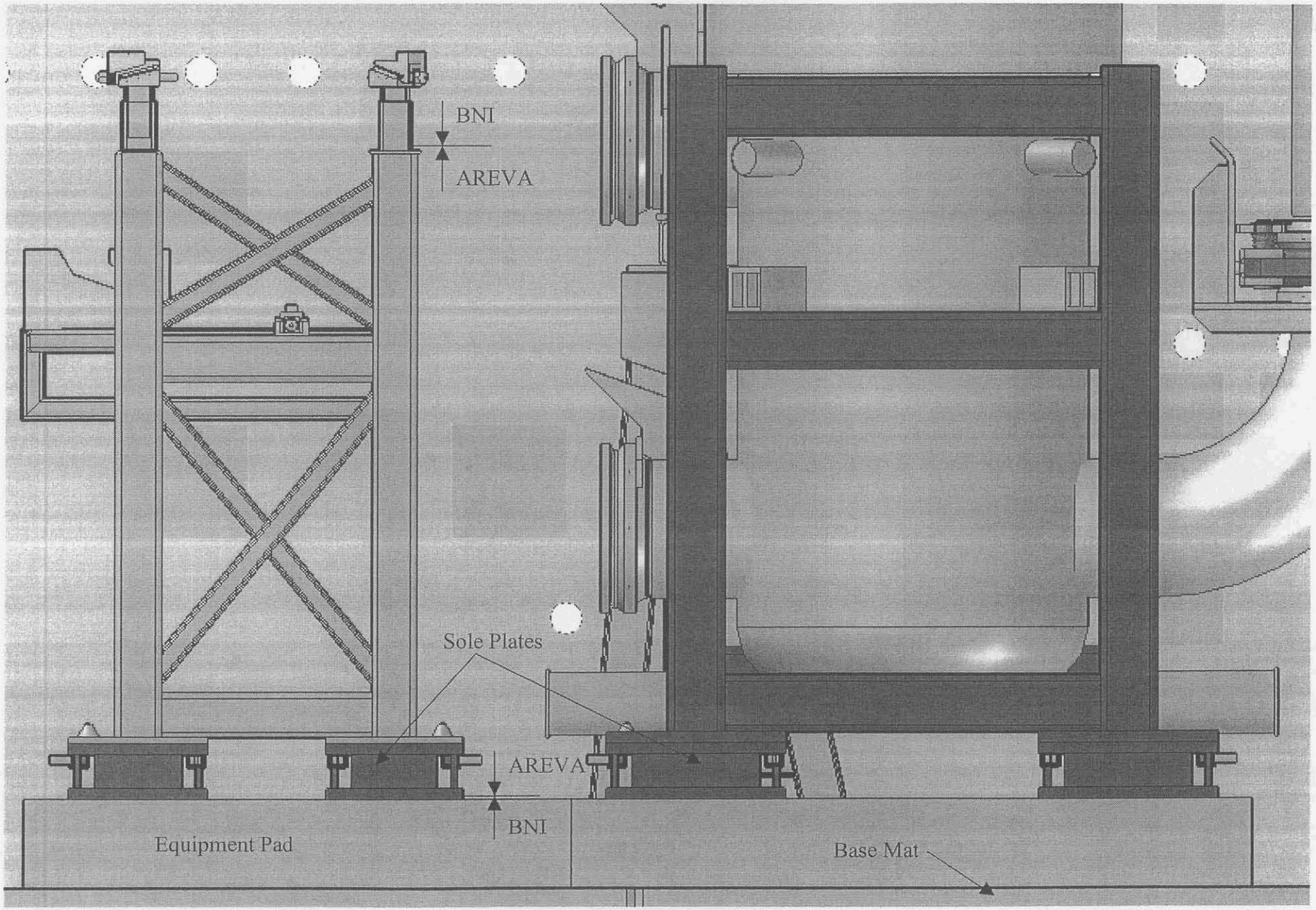

Sole Plates
(FEP)

Stud location as required. Must be accessible with impact wrench.

Example Sole Plate

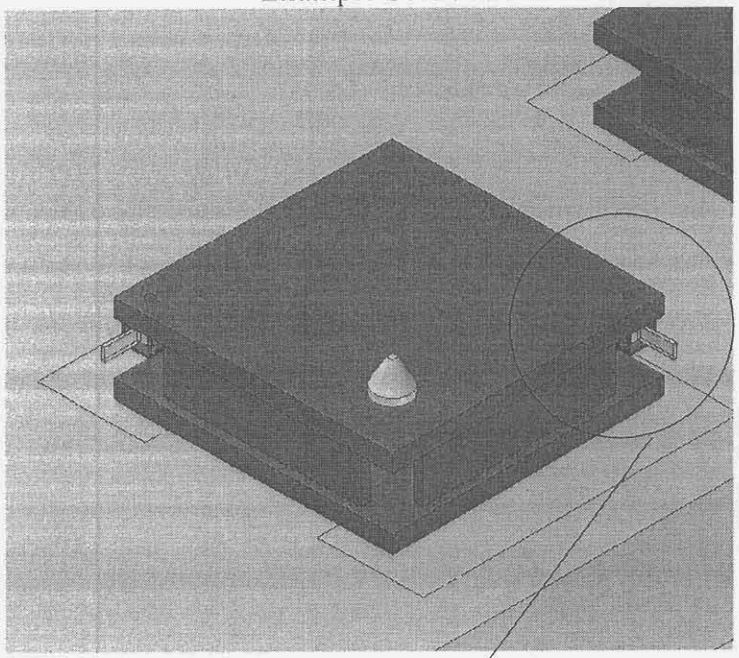

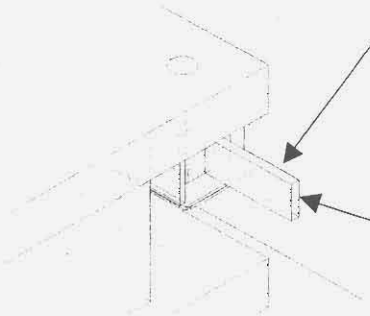

Captured Nuts must be accessible with the Power Manipulator.

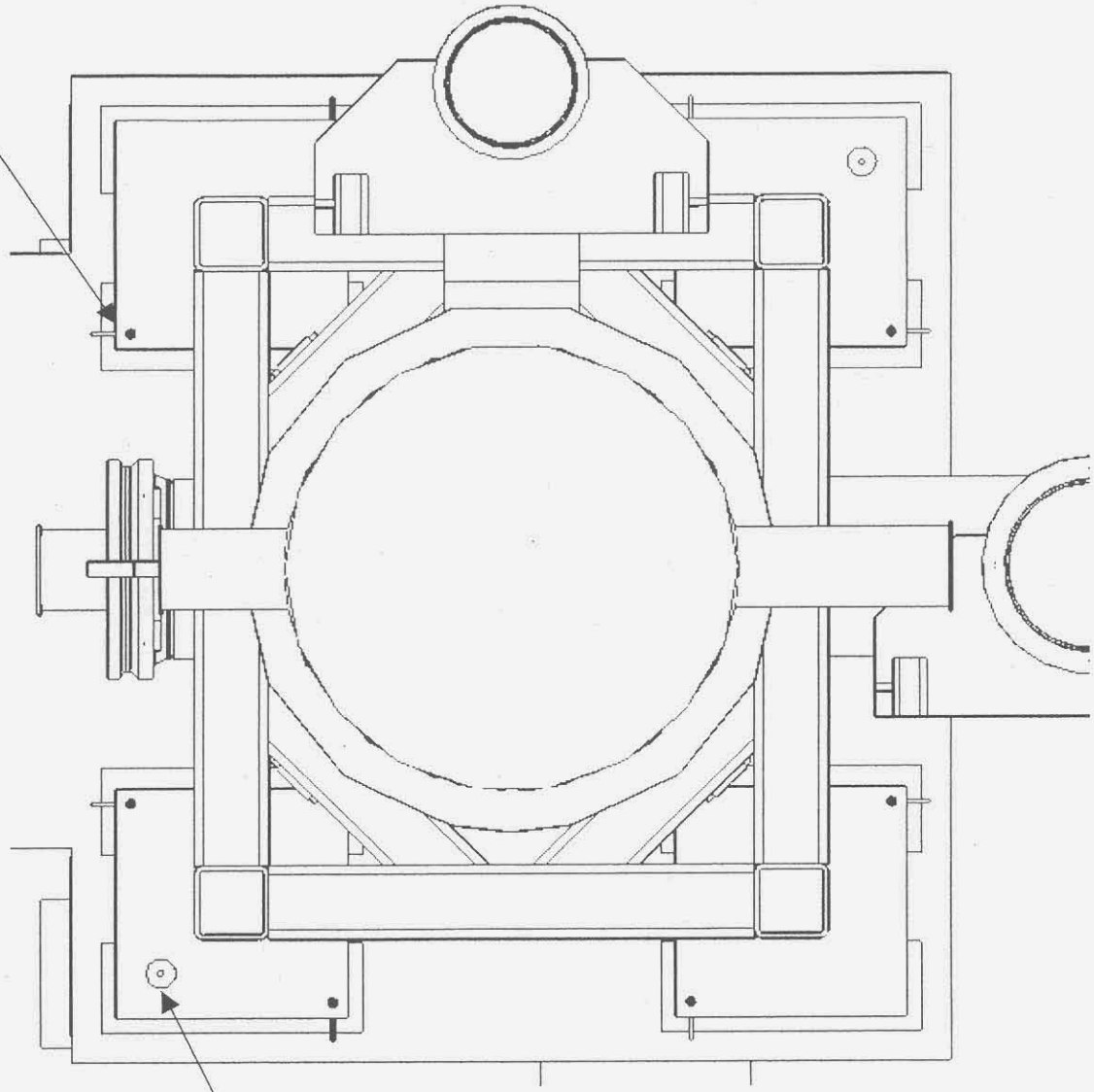

Dowel Pin (Typ)

FEP

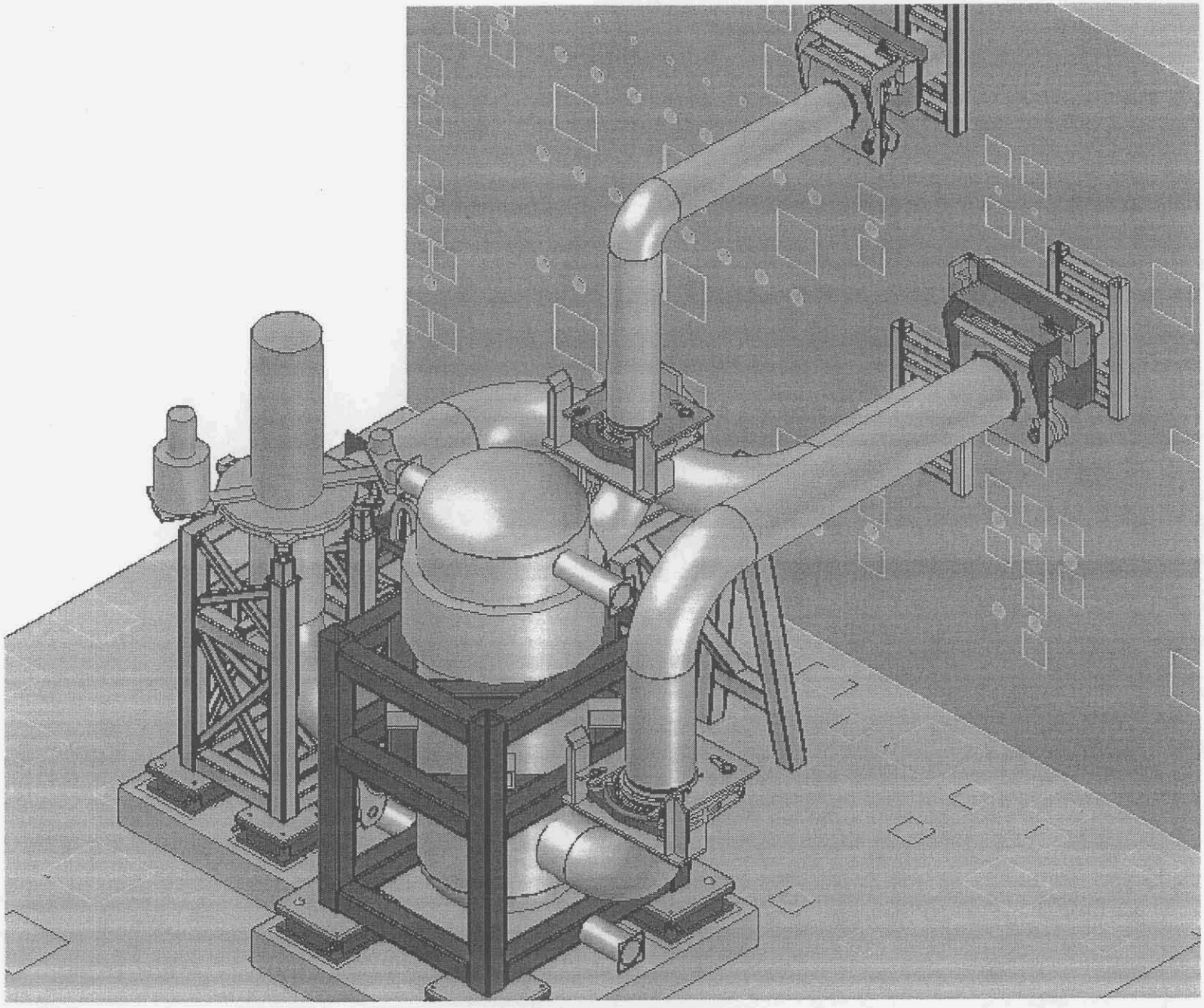

FEP

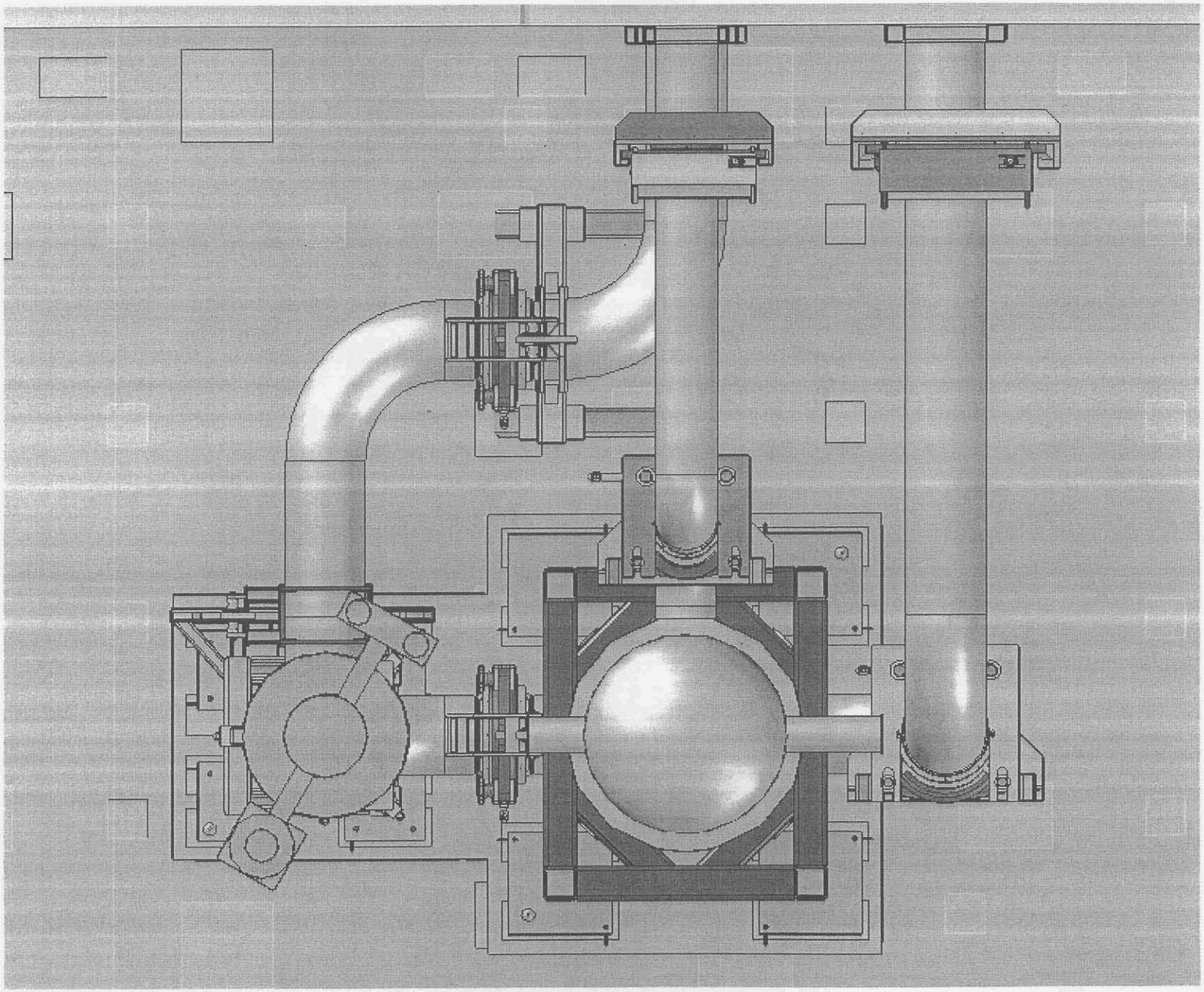

FEP

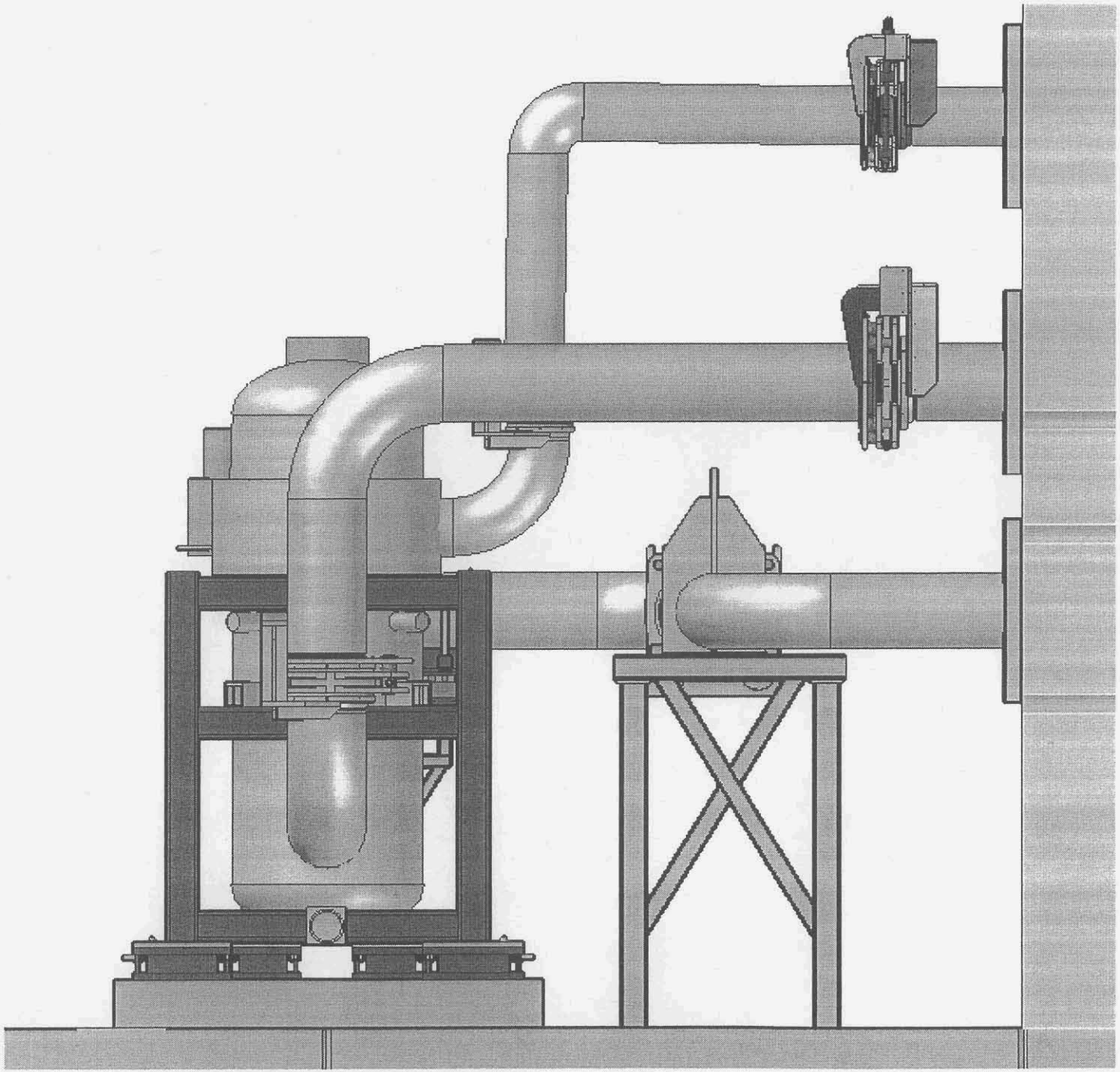

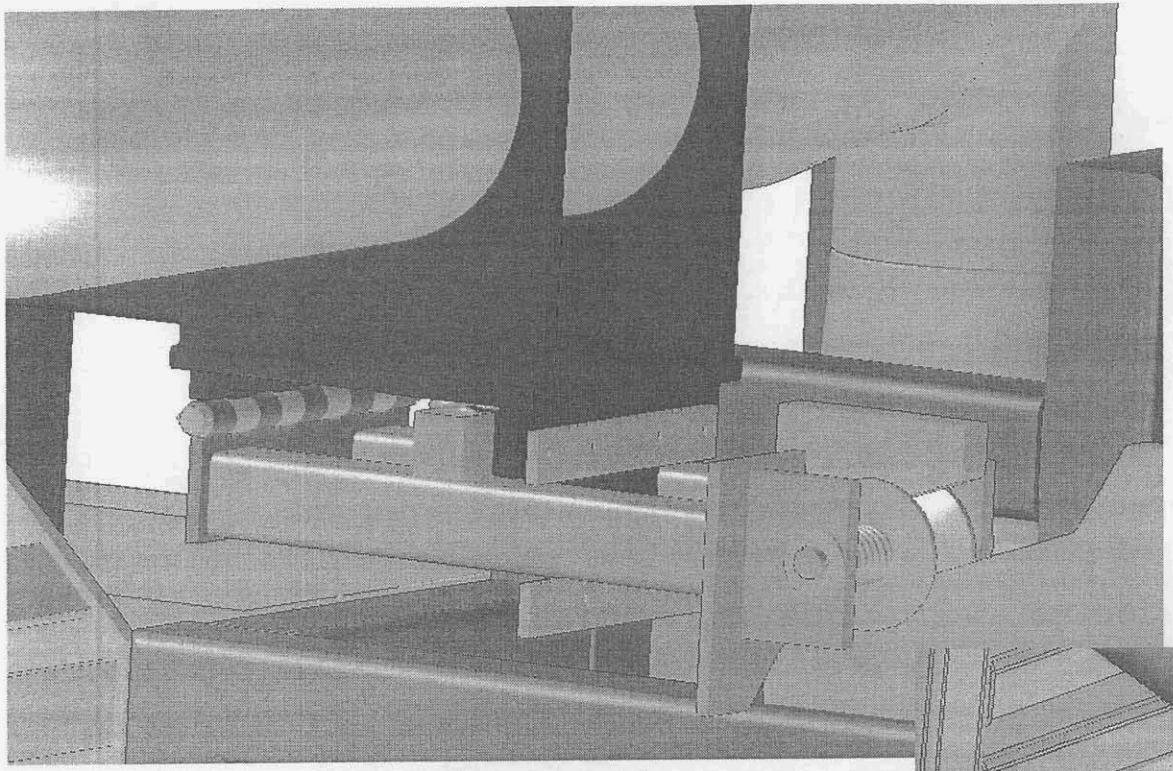

Mid-Roller Assembly

Connector Roller Assembly

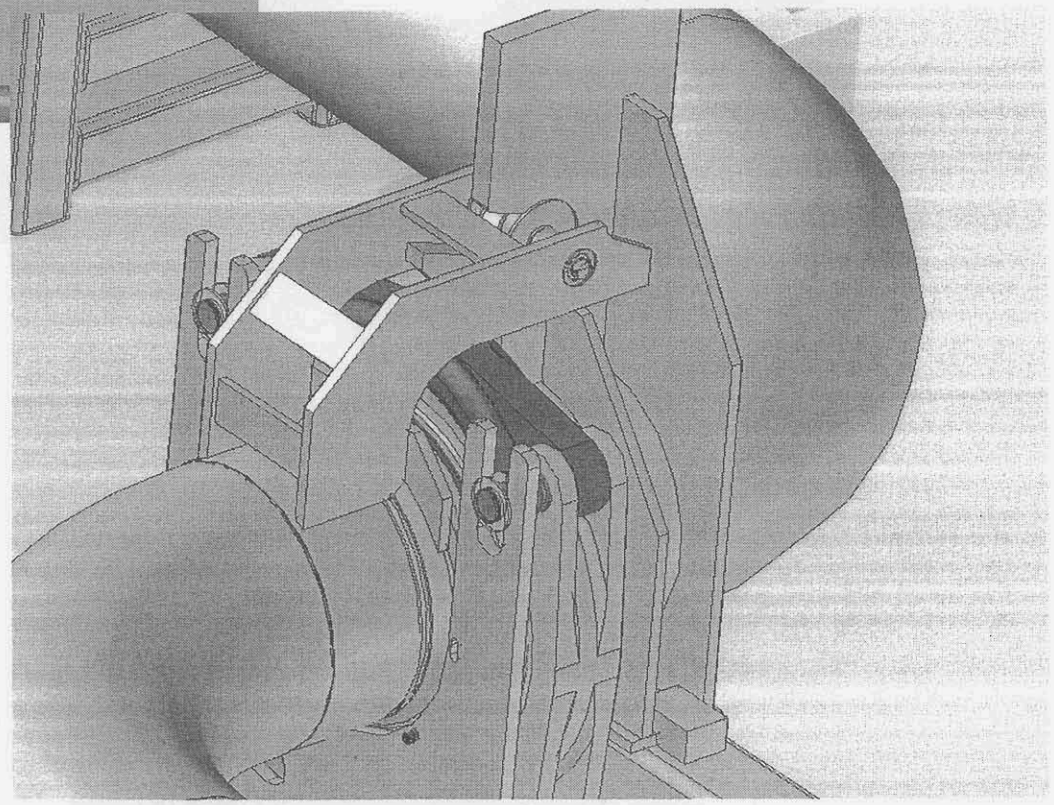

ATTACHMENT #6

SC-I/SC-II Seismic Analysis Qualification and FEA Report Check List

SC-I/II Seismic Analysis Qualification and FEA Report Check List

	Required Data	Source Reference	Applicable Section of Seismic Qualification Report
1	**Identification and Description of Equipment**		
1.1	Equipment Tag Number or other identification that uniquely defines the equipment	24590-WTP-3PS-SS90-T0001 §7.1.2(a)	
1.2	Identification of safety functions of the equipment that must be provided during and after a design basis earthquake (DBE)	24590-WTP-3PS-SS90-T0001 §7.1.2(d) 24590-WTP-3PS-MV00-T0002 §7.3.1 Equipment specification and/or data sheet	
1.3	Identification and description of the parts or features of the equipment that perform the safety functions and are therefore required to resist the DBE (this includes identification of Seismic Categories of relevant components or parts of the equipment)	Equipment specification and/or data sheet 24590-WTP-3PS-MV00-T0002 §2.2.4 DOE-STD-1020-94 §1.4 (page 1-7) and §C.8 (page C-65)	
1.4	Identification of basic material properties, key dimensions, and physical configuration of the equipment, including reference to design drawings/documents (including revision designation) that are used to control the design/configuration of the equipment	24590-WTP-3PS-SS90-T0001 §7.1.2(c)	
2	**Description of Analyses and Methodology**		
2.1	Reference to governing code(s) that specify ultimate or yield values (code allowable strength or stress levels)	Equipment specification and/or data sheet 24590-WTP-3PS-SS90-T0001 §7.1.2(e) 24590-WTP-3PS-MV00-T0002 §2.2.4 DOE-STD-1020-94 §2.3.2 (page 2-12)	
2.2	Identification of the code-defined strength or stress levels used in the analyses (the capacity of the equipment based on code ultimate or yield values)	24590-WTP-3PS-SS90-T0001 §7.1.2(e) 24590-WTP-3PS-MV00-T0002 §2.2.4 DOE-STD-1020-94 §2.3.2 (page 2-12)	
2.3	Definition of the seismic loads (earthquake loadings) used in the analysis (e.g., in-structure response spectra)	24590-WTP-3PS-SS90-T0001 §7.1.2(e) DOE-STD-1020-94 §1.4 (page 1-7), §2.2 (page 2-4), §C.8 (page C-65) 24590-WTP-3PS-MV00-T0002 §2.2.4	
2.4	Identification of equipment aging processes (e.g., corrosion, erosion, radiation, vibration/thermal fatigue, etc.), documentation or reference to documentation of these affects on material properties over the design life of the equipment, and evidence that the equipment will continue to provide its safety functions during and after a DBE at the end of design life	Equipment specification and/or data sheet 24590-WTP-3PS-SS90-T0001 §2.3 IEEE Std 344	

SC-I/II Seismic Analysis Qualification and FEA Report Check List

	Required Data	Source Reference	Applicable Section of Seismic Qualification Report
2.5	If an equivalent static analysis model is used in lieu of dynamic analyses, include justification of the adequacy of this approach (e.g., evidence that the structural features of the equipment are relatively simple, symmetric, and have essentially uniform distribution of mass and stiffness)	24590-WTP-3PS-SS90-T0001 §6.1.2 and §7.1.2(g) 24590-WTP-3PS-MV00-T0002 §2.2.4 DOE-STD-1020-94 §2.2, page 2-4	
2.6	Description of how the analysis considers 3 orthogonal components of earthquake ground motion (two horizontal and one vertical), and how the responses from the various direction components are combined in accordance with American Society of Civil Engineers (ASCE) Standard 4.	24590-WTP-3PS-SS90-T0001 §6.1.3 24590-WTP-3PS-MV00-T0002 §2.2.4 DOE-STD-1020-94 §2.3.2 (page 2-12)	
2.7	Identification of the damping values used in the analyses (e.g., damping values of 2 for massive low-stressed equipment with 0.5 for sloshing modes in liquid-containing metal tanks, or 3 for electrical cabinets and other equipment)	24590-WTP-3PS-SS90-T0001 §6.1.1(b) 24590-WTP-3PS-MV00-T0002 §2.2.4 DOE-STD-1020-94 §2.3.3 (page 2-15)	
2.8	Evidence that connecting structural supports and piping (and the associated dynamic coupling effects) are properly represented in the analytical model	Equipment specification and/or data sheet 24590-WTP-3PS-SS90-T0001 §6.2.3 24590-WTP-3PS-MV00-T0002 §2.2.4 DOE-STD-1020-94 §C.6.1, Items 2 & 3 (page C-58)	
2.9	Identification of the best estimate of all non-seismic demands expected to occur concurrently with a DBE (in a comparable format to the code allowable values)	Equipment specification and/or data sheet 24590-WTP-3PS-SS90-T0001 §4 and §5 24590-WTP-3PS-MV00-T0002 §2.2.4 DOE-STD-1020-94 §2.3.2 (page 2-12)	
3	**Results/Conclusions**		
3.1	Identification of the important natural frequencies of the equipment (or the peak of the design response spectrum must be used)	24590-WTP-3PS-SS90-T0001 §6.1.1(a) and §6.1.2(a) 24590-WTP-3PS-MV00-T0002 §2.2.4 DOE-STD-1020-94 §2.2 (page 2-4)	done
3.2	Identification of the computed elastic seismic response of the equipment (in a comparable format to the code allowable values)	24590-WTP-3PS-SS90-T0001 §7.1.2(g) 24590-WTP-3PS-MV00-T0002 §2.2.4 DOE-STD-1020-94 §2.3.2 (page 2-12)	

SC-I/II Seismic Analysis Qualification and FEA Report Check List

	Required Data	Source Reference	Applicable Section of Seismic Qualification Report
3.3	Description of how the analyses address the distribution of resulting seismic-induced inertial forces and evaluation of the load path(s)	24590-WTP-3PS-SS90-T0001 §7.1.2(g) 24590-WTP-3PS-MV00-T0002 §2.2.4 DOE-STD-1020-94 §2.2 (page 2-4)	
3.4	Description of method used to combine seismic and non-seismic loads (using code-defined load factors) and to compare the result with code-defined strength or stress levels to confirm the design is adequate	Equipment specification and/or data sheet 24590-WTP-3PS-SS90-T0001 §5 24590-WTP-3PS-MV00-T0002 §2.2.4 DOE-STD-1020-94 §2.3.2 (page 2-12)	
3.5	Identification of relative seismic anchor motion (SAM) between equipment and interconnected piping	24590-WTP-3PS-SS90-T0001 §7.4 24590-WTP-3PS-MV00-T0002 §2.2.4 DOE-STD-1020-94 §2.2 (page 2-6) and §2.4.1 (page 2-19)	
3.6	Identification of reaction loads on connecting structural supports and piping (individual loads as well as load combinations)	24590-WTP-3PS-SS90-T0001 §7.2	
4	**Quality Assurance**		
4.1	Signature of responsible engineer who performed the calculation	24590-WTP-3PS-MV00-T0002 §2.2.4 NQA-1-1989 DOE-STD-1020-94 §1.4 (page 1-7) and §C.8 (page C-65)	
4.2	Signature of engineer(s) who checked the calculation for numerical accuracy, and theory and assumptions	24590-WTP-3PS-MV00-T0002 §2.2.4 NQA-1-1989 Supplement 3S-1 DOE-STD-1020-94 §1.4 (page 1-7) and §C.8 (page C-65)	
4.3	Description of theory (analytical method) and assumptions used in the seismic analyses	NQA-1-1989 Supplement 3S-1 24590-WTP-3PS-SS90-T0001 §7.1.2(g)	
4.4	Description of computer program(s) used in the analyses, including model(s) used, input values, and output results calculated by the computer program	24590-WTP-3PS-SS90-T0001 §7.1.2(g) 24590-WTP-3PS-MV00-T0002 §2.2.4 NQA-1-1989 Supplement 3S-1 DOE-STD-1020-94 §C.8 (page C-65)	
4.5	Printout of output of computer analyses, including signature of responsible engineer who performed the computer analyses on first page of output	24590-WTP-3PS-MV00-T0002 §2.2.4 NQA-1-1989 Supplement 3S-1 DOE-STD-1020-94 §C.8 (page C-65)	

SC-I/II Seismic Analysis Qualification and FEA Report Check List

Required Data	Source Reference	Applicable Section of Seismic Qualification Report
4.6 Documentation or reference to documentation of verification of computer program accuracy	24590-WTP-3PS-SS90-T0001 §7.1.2(g) 24590-WTP-3PS-MV00-T0002 §2.2.4 NQA-1-1989 Supplement 3S-1 DOE-STD-1020-94 §C.8 (page C-65)	