WASHINGTON STATE DEPARTMENT OF ECOLOGY

Dangerous Waste Permit Application Part A Form

Date Received	Reviewed by:	Date:	0	9	2	2	2	0	0	8
Month Day Year	Approved by:	Date:	0	9	2	2	2	0	0	8
0 9 1 9 2 0 0 8										

I. This form is submitted to: (place an "X" in the appropriate box)

☒	**Request modification to a final status permit (commonly called a "Part B" permit)**
☐	**Request a change under interim status**
☐	**Apply for a final status permit. This includes the application for the initial final status permit for a site or for a permit renewal (i.e., a new permit to replace an expiring permit).**
☐	**Establish interim status because of the wastes newly regulated on:** (Date)
	List waste codes:

II. EPA/State ID Number

W A 7 8 9 0 0 0 8 9 6 7

III. Name of Facility

US Department of Energy – Hanford Facility

IV. Facility Location (Physical address not P.O. Box or Route Number)

A. Street

825 Jadwin

City or Town	State	ZIP Code
Richland	WA	99352

County Code (if known)	County Name
005	Benton

B. Land Type	C. Geographic Location Latitude (degrees, mins, secs)	Longitude (degrees, mins, secs)	D. Facility Existence Date Month	Day	Year
F	Refer to TOPO Map (Section XV.)		03	02	1943

V. Facility Mailing Address

Street or P.O. Box

P.O. Box 550

City or Town	State	ZIP Code
Richland	WA	99352

VI. Facility contact (Person to be contacted regarding waste activities at facility)		
Name (last)	**(first)**	
Brockman	David	
Job Title	**Phone Number (area code and number)**	
Manager	(509) 376-7395	
Contact Address		
Street or P.O. Box		
P.O. Box 550		
City or Town	**State**	**ZIP Code**
Richland	WA	99352

VII. Facility Operator Information	
A. Name	**Phone Number**
Department of Energy Owner/Operator CH2M HILL Plateau Remediation Company Co-Operator for Integrated Disposal Facility*	(509) 376-7395 (509) 376-0556*
Street or P.O. Box	
P.O. Box 550 P.O. Box 1600 *	

City or Town	State	ZIP Code
Richland	WA	99352

B. Operator Type	F

C. Does the name in VII.A reflect a proposed change in operator?	☐ Yes ☒ No Co-Operator* change									
If yes, provide the scheduled date for the change:	Month			Day			Year			
	1	0		0	1		2	0	0	8

D. Is the name listed in VII.A. also the owner? If yes, skip to Section VIII.C.	☐ Yes ☒ No

VIII. Facility Owner Information	
A. Name	**Phone Number (area code and number)**
David A. Brockman, Operator/Facility-Property Owner	(509) 376-7395
Street or P.O. Box	
P.O. Box 550	
City or Town	**State** / **ZIP Code**
Richland	WA / 99352

B. Owner Type	F

C. Does the name in VIII.A reflect a proposed change in owner?	☐ Yes ☒ No									
If yes, provide the scheduled date for the change:	Month			Day			Year			

IX. NAICS Codes (5/6 digit codes)													
A. First							**B. Second**						
5	6	2	2	1		Waste Treatment & Disposal	9	2	4	1	1	0	Administration of Air & Water Resource & Solid Waste Management Programs
C. Third							**D. Fourth**						
5	4	1	7	1		Research & Development in the Physical, Engineering, & Life Sciences							

X. Other Environmental Permits (see instructions)

A. Permit Type	B. Permit Number	C. Description

XI. Nature of Business (provide a brief description that includes both dangerous waste and non-dangerous waste areas and activities)

The Integrated Disposal Facility (IDF) is an expandable lined landfill located in the 200 East Area of the Hanford Facility. The landfill is divided lengthwise into distinct east and west cells, one for disposal of low-level radioactive waste (the east cell) and the other for disposal of mixed waste (the west cell). The cell for disposal of low-level radioactive waste is outside the scope of this permit.

Mixed waste disposed at the IDF is currently limited to vitrified low-activity waste (LAW) from the Waste Treatment Plant (WTP) and Demonstration Bulk Vitrification System (DBVS). Additionally, mixed waste generated by IDF operations will be disposed of in IDF. (The IDF Permit requires modification if other waste streams are proposed for disposal.) The vitrified waste form generated by both the WTP and the DBVS facilities is known as Immobilized Low Activity Waste (ILAW) . The amount shown in Section XII of 8.2-hectare meters (82,000 cubic meters) is the waste capacity of the initial construction. The amount will be revised as required for future expansion to accommodate the entire waste volume through an approved permit modification.

D80

Mixed radioactive high level wastes stored in the Double-Shell and Single-Shell Tank System carry the characteristic dangerous waste numbers D002, and D004 through D011 . The specified technology based treatment standard for high-level radioactive waste as described in 40 CFR 268.40 (vitrification) will be used to produce the waste form that will be placed in steel canisters or steel boxes. Tank waste will meet this vitrification standard as the waste exits at the Waste Treatment Plant or Demonstration Bulk Vitrification System Facility. (Permit conditions for the WTP and DBVS require that the D001 and D003 waste codes be removed prior to the waste stream entering these facilities.)

IDF operational activities (including decontamination, cleanup, and maintenance) will generate a small amount of waste. Waste that can meet IDF waste acceptance without treatment will be buried at the IDF. All other IDF operational waste will be managed pursuant to WAC 173-303-200 and either sent to a 90-day accumulation area or directly to another permitted TSD for treatment. Treated IDF operational waste will either be buried at IDF or sent to another permitted Hanford TSD for final disposition.

S01

Process Code S01 (container storage) has been included within this Part A Form in the event that storage is required before final disposal (e.g., to support the staging and confirmation process of the waste or cooling of vitrified waste if required).

EXAMPLE FOR COMPLETING ITEMS XII and XIII (shown in lines numbered X-1, X-2, and X-3 below): A facility has two storage tanks that hold 1200 gallons and 400 gallons respectively. There is also treatment in tanks at 20 gallons/hr. Finally, a one-quarter acre area that is two meters deep will undergo *in situ vitrification.*

Section XII. Process Codes and Design Capacities								Section XIII. Other Process Codes								
Line Number		A. Process Codes (enter code)			B. Process Design Capacity		C. Process Total Number of Units	Line Number		A. Process Codes (enter code)			B Process Design Capacity		C. Process Total Number of Units	D. Process Description
					1. Amount	2. Unit of Measure (enter code)							1. Amount	2. Unit of Measure (enter code)		
X	1	S	0	2	1,600	G	002	X	1	T	0	4	700	C	001	In situ vitrification
X	2	T	0	3	20	E	001									
X	3	T	0	4	700	C	001									
	1	D	8	0	8.2	F	1		1							
	2	S	0	1	*	*	1		2							
	3								3							
	4								4							
	5								5							
	6								6							
	7								7							
	8								8							
	9								9							
1	0							1	0							
1	1							1	1							
1	2							1	2							
1	3							1	3							
1	4							1	4							
1	5							1	5							
1	6							1	6							
1	7							1	7							
1	8							1	8							
1	9							1	9							
2	0							2	0							
2	1							2	1							
2	2							2	2							
2	3							2	3							
2	4							2	4							
2	5							2	5							

XIV. Description of Dangerous Wastes

Example for completing this section: A facility will receive three non-listed wastes, then store and treat them on-site. Two wastes are corrosive only, with the facility receiving and storing the wastes in containers. There will be about 200 pounds per year of each of these two wastes, which will be neutralized in a tank. The other waste is corrosive and ignitable and will be neutralized then blended into hazardous waste fuel. There will be about 100 pounds per year of that waste, which will be received in bulk and put into tanks.

Line Number	A. Dangerous Waste No.				B. Estimated Annual Quantity of Waste	C. Unit of Measure	D. Processes									
							(1) Process Codes									(2) Process Description [If a code is not entered in D (1)]
X 1	**D**	**0**	**0**	**2**	**400**	**P**	**S**	**0**	**1**	**T**	**0**	**1**				
X 2	**D**	**0**	**0**	**1**	**100**	**P**	**S**	**0**	**2**	**T**	**0**	**1**				
X 3	**D**	**0**	**0**	**2**												**Included with above**
1	D	0	0	2	20,000,000	K	D	8	0							Includes Debris
2	D	0	0	4		K	D	8	0							Includes Debris
3	D	0	0	5		K	D	8	0							Includes Debris
4	D	0	0	6		K	D	8	0							Includes Debris
5	D	0	0	7		K	D	8	0							Includes Debris
6	D	0	0	8		K	D	8	0							Includes Debris
7	D	0	0	9		K	D	8	0							Includes Debris
8	D	0	1	0		K	D	8	0							Includes Debris
9	D	0	1	1		K	D	8	0							Includes Debris
10	D	0	1	8		K	D	8	0							Includes Debris
11	D	0	1	9		K	D	8	0							Includes Debris
12	D	0	2	2		K	D	8	0							Includes Debris
13	D	0	2	8		K	D	8	0							Includes Debris
14	D	0	2	9		K	D	8	0							Includes Debris
15	D	0	3	0		K	D	8	0							Includes Debris
16	D	0	3	3		K	D	8	0							Includes Debris
17	D	0	3	4		K	D	8	0							Includes Debris
18	D	0	3	5		K	D	8	0							Includes Debris
19	D	0	3	6		K	D	8	0							Includes Debris
20	D	0	3	8		K	D	8	0							Includes Debris
21	D	0	3	9		K	D	8	0							Includes Debris
22	D	0	4	0		K	D	8	0							Includes Debris
23	D	0	4	1		K	D	8	0							Includes Debris
24	D	0	4	3		K	D	8	0							Includes Debris
25	W	T	0	1		K	D	8	0							Includes Debris

EPA/State ID Number	W	A	7	8	9	0	0	0	8	9	6	7

Continuation of Section XIV. Description of Dangerous Waste

Line Number	A. Dangerous Waste No. (enter code)				B. Estimated Annual Quantity of Waste	C. Unit of Measure (enter code)	D. Process									
							(1) Process Codes (enter)									(2) Process Description [If a code is not entered in D (1)]
26	W	T	0	2		K	D	8	0							Includes Debris
27	W	P	0	1		K	D	8	0							Includes Debris
28	W	P	0	2		K	D	8	0							Includes Debris
29	F	0	0	1		K	D	8	0							Includes Debris
30	F	0	0	2		K	D	8	0							Includes Debris
31	F	0	0	3		K	D	8	0							Includes Debris
32	F	0	0	4		K	D	8	0							Includes Debris
33	F	0	0	5		K	D	8	0							Includes Debris
34	F	0	3	9		K	D	8	0							Includes Debris
35	D	0	0	1	600,000*	K	S	0	1*							Includes Debris
36	D	0	0	2		K	S	0	1*							Includes Debris
37	D	0	0	3		K	S	0	1*							Includes Debris
38	D	0	0	4		K	S	0	1*							Includes Debris
39	D	0	0	5		K	S	0	1*							Includes Debris
40	D	0	0	6		K	S	0	1*							Includes Debris
41	D	0	0	7		K	S	0	1*							Includes Debris
42	D	0	0	8		K	S	0	1*							Includes Debris
43	D	0	0	9		K	S	0	1*							Includes Debris
44	D	0	1	0		K	S	0	1*							Includes Debris
45	D	0	1	1		K	S	0	1*							Includes Debris
46	D	0	1	8		K	S	0	1*							Includes Debris
47	D	0	1	9		K	S	0	1*							Includes Debris
48	D	0	2	2		K	S	0	1*							Includes Debris
49	D	0	2	8		K	S	0	1*							Includes Debris
50	D	0	2	9		K	S	0	1*							Includes Debris
51	D	0	3	0		K	S	0	1*							Includes Debris
52	D	0	3	3		K	S	0	1*							Includes Debris
53	D	0	3	4		K	S	0	1*							Includes Debris
54	D	0	3	5		K	S	0	1*							Includes Debris
55	D	0	3	6		K	S	0	1*							Includes Debris
56	D	0	3	8		K	S	0	1*							Includes Debris
57	D	0	3	9		K	S	0	1*							Includes Debris
58	D	0	4	0		K	S	0	1*							Includes Debris

EPA/State ID Number	W	A	7	8	9	0	0	0	8	9	6	7

Continuation of Section XIV. Description of Dangerous Waste

Line Number	A. Dangerous Waste No. (enter code)				B. Estimated Annual Quantity of Waste	C. Unit of Measure (enter code)	D. Process									
							(1) Process Codes (enter)									(2) Process Description [If a code is not entered in D (1)]
59	D	0	4	1		K	S	0	1*							Includes Debris
60	D	0	4	3		K	S	0	1*							Includes Debris
61	W	T	0	1		K	S	0	1*							Includes Debris
62	W	T	0	2		K	S	0	1*							Includes Debris
63	W	P	0	1		K	S	0	1*							Includes Debris
64	W	P	0	2		K	S	0	1*							Includes Debris
65	F	0	0	1		K	S	0	1*							Includes Debris
66	F	0	0	2		K	S	0	1*							Includes Debris
67	F	0	0	3		K	S	0	1*							Includes Debris
68	F	0	0	4		K	S	0	1*							Includes Debris
69	F	0	0	5		K	S	0	1*							Includes Debris
70	F	0	3	9		K	S	0	1*							Includes Debris
71																
72																
73																
74																
75																
76																
77																
78																
79																
80																
81																
82																
83																
84																
85																
86																
87																
88																
89																
90																

XV. Map

Attach to this application a topographic map of the area extending to at least one (1) mile beyond property boundaries. The map must show the outline of the facility; the location of each of its existing and proposed intake and discharge structures; each of its dangerous waste treatment, storage, recycling, or disposal units; and each well where fluids are injected underground. Include all springs, rivers, and other surface water bodies in this map area, plus drinking water wells listed in public records or otherwise known to the applicant within ¼ mile of the facility property boundary. The instructions provide additional information on meeting these requirements.

Topographic map is located in the Ecology Library

XVI. Facility Drawing

All existing facilities must include a scale drawing of the facility (refer to Instructions for more detail).

XVII. Photographs

All existing facilities must include photographs (aerial or ground-level) that clearly delineate all existing structures; existing storage, treatment, recycling, and disposal areas; and sites of future storage, treatment, recycling, or disposal areas (refer to Instructions for more detail).

XVIII. Certifications

I certify under penalty of law that this document and all attachments were prepared under my direction or supervision in accordance with a system designed to assure that qualified personnel properly gather and evaluate the information submitted. Based on my inquiry of the person or persons who manage the system, or those persons directly responsible for gathering the information, the information submitted is, to the best of my knowledge and belief, true, accurate, and complete. I am aware that there are significant penalties for submitting false information, including the possibility of fine and imprisonment for knowing violations.

Operator Name and Official Title (type or print) David A. Brockman, Manager U.S. Department of Energy Richland Operations Office	**Signature**	**Date Signed** 9/19/08
Co-Operator* Name and Official Title (type or print) John G. Lehew, III President and Chief Executive Officer CH2M HILL Plateau Remediation Company	**Signature**	**Date Signed** 9/2/08
Co-Operator – Address and Telephone Number* P.O. Box 1600 Richland, WA 99352 (509) 376-0556		
Facility-Property Owner Name and Official Title (type or print) David A. Brockman, Manager U.S. Department of Energy Richland Operations Office	**Signature**	**Date Signed** 9/19/08

Comments
In Section VII. Facility Operator Information, there is no change to DOE as the Facility Owner/Operator; only a change in Co-Operator*. The change in Co-Operator* will be effective October 1, 2008.

Integrated Disposal Facility

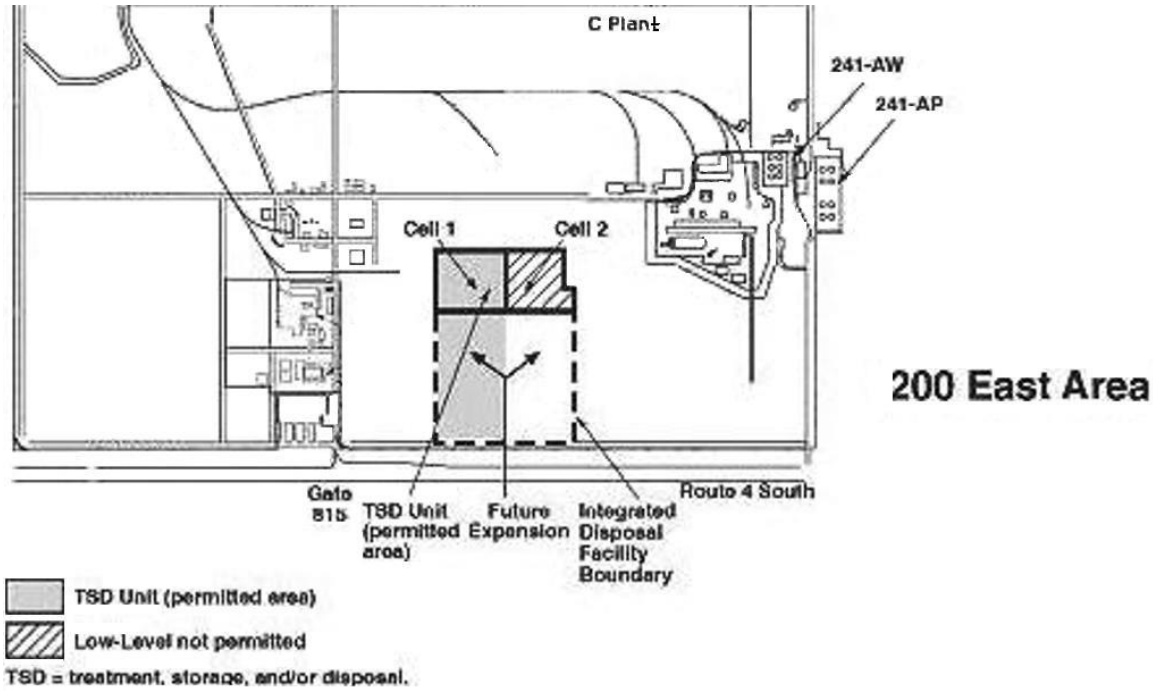

IDF 200 East Area Locational References

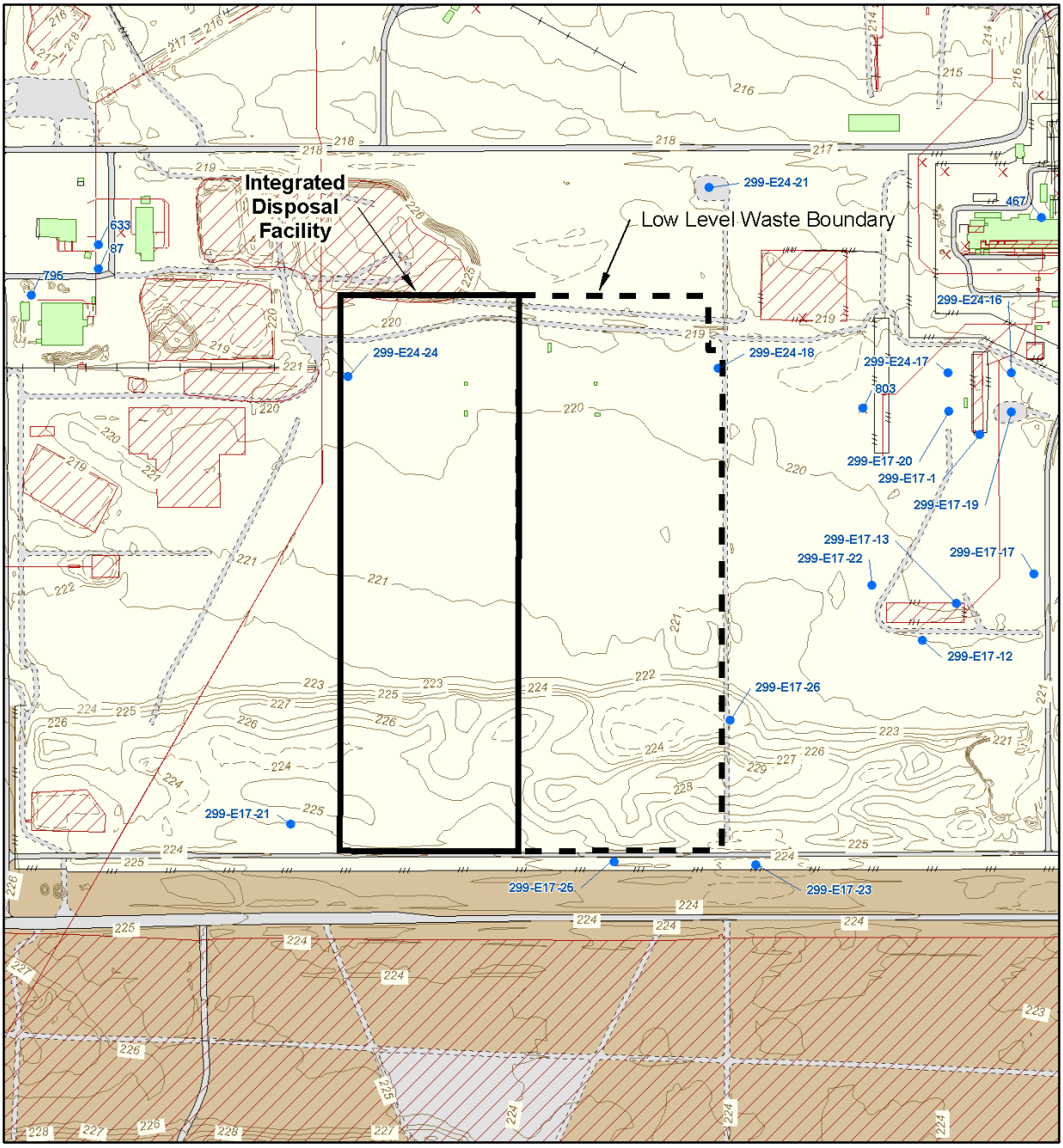

Integrated Disposal Facility

Prepared for:
US DEPARTMENT OF ENERGY
RICHLAND OPERATIONS OFFICE
Created and Published by:
Central Mapping Services
Fluor Hanford, Richland, WA
(509) 373-9076
INTENDED USE: REFERENCE ONLY

Hanford Site

Unit Location

- TSD Boundary
- DOE Operating Areas
- Hanford Facility
- Injection and Withdrawal Wells
- Contours at 1 Meter Intervals
- Depression Contours at 1 Meter Intervals
- SWMUs and Known Releases
- Linear SWMUs and Known Releases
- Spot SWMUs and Known Releases
- Buildings
- Structures
- Concrete
- Major Roads
- Service Roads
- Railroads
- Fences

Meters: 0 50 100 150 200
Feet: 0 200 400 600

O:\Projects\2005\RCRA_TSD\050614_2ndPriorityFacilityTopos2005_Thompson\Maps\080519_IDF_LineDwg_85x11_Rev0.mxd - 7/9/2008 @ 2:23:49 PM

This page intentionally left blank.