R11249346

Drawing Change Notice

CHANGE DOCUMENT NO.
24590-PTF-VDCN-MS-10-00007

JOB NO.	TITLE FOR CHANGE NOTICE
24590	UFP-VSL-00062A Redesign

DESIGN DOCUMENT NUMBER	REV	DESIGN DOCUMENT NUMBER	REV
24590-QL-POD-MVA0-00001-03-01	F	24590-QL-POD-MVA0-00001-03-02	F
24590-QL-POD-MVA0-00001-03-03	F	24590-QL-POD-MVA0-00001-03-20	G
24590-QL-POD-MVA0-00001-03-22	E	24590-QL-POD-MVA0-00001-03-23	E
24590-QL-POD-MVA0-00001-03-24	E	24590-QL-POD-MVA0-00001-03-40	B
24590-QL-POD-MVA0-00001-03-41	B		

PART OF DESIGN CHANGE PACKAGE (DCP)? ☐ Yes ☒ No DCP No.: N/A Rev:

JUSTIFICATION FOR CHANGE	CAUSE CODE
Based on the re-analysis of UFP-VSL-00062A, per calculation 24590-PTF-MVC-UFP-00023, for revised seismic conditions and design evolution, required a redesign of the vessel.	01 and 23

Supersedes Change Document ☐ Yes ☒ No

ECN Needed ☐ Yes ☒ No

REQUIREMENTS REVIEW

Client Approval Required ☐ Yes ☒ No | Interface Resolution Required * ☐ Yes ☒ No

Address any "yes" answers in the description

DESCRIPTION OF CHANGE

NOTE: Components removed or deleted per this VDCN are to be removed from the actual vessel unless otherwise noted.

1. **Affected Document: 24590-QL-POD-MVA0-00001-03-01 (see Attachment 1, page 1 of this VDCN).**
   a.) Design Conditions block: Change 'Design Pressure' to 15 / -2.0
   b.) Design Conditions block: Change 'Design Temperature' to 230°F.
   c.) Bill of Materials block: Delete the following Line Items:
   Line item 46
   Line item 49
   Line item 54
   Line item 55
   Line item 58

   Please note that source, special nuclear, and byproduct materials, as defined in the Atomic Energy Act of 1954 (AEA) are regulated at the U. S. Department of Energy (DOE) facilities exclusively by DOE acting pursuant to its AEA authority. DOE asserts that pursuant to AEA, it has sole and exclusive responsibility and authority to regulate source, special nuclear, and byproduct materials at DOE-owned nuclear facilities. Information contained herein on radionuclides is provided for process description purposes only.

   d.) Bill of Materials block, line item 47, change as follows:
   (1.) Thick/Size: SCH 160
   (2.) Material: SA403 TP316/316L W 0.030% MAX C
   (3.) Description: 2" SCH 160 CAP.
   e.) Bill of Materials block: Add item 59 and 60 shown on Attachment 1, page 16 of this VDCN.
   f.) Estimated Weight (in LBS) block, change as follows:
   OPERATING - 512,285 lbs
   FULL WATER - 401,100 lbs
   EMPTY - 103,000 lbs
   g.) General Notes and Special Requirements: Delete Note 8 and replace with the following text:
   Fabrication tolerances for field modifications shall be per 24590-WTP-MV-M59T-00001 (Pressure Vessel Tolerances Standard Details) and PFI Standard ES-24 (Pipe Bending Methods, Tolerances, Process and Material Requirement). For tolerances not specified by these standards, the following shall apply, unless otherwise noted:

Dimension	Tolerance
Linear < 12 inch	± 1/8 inch
Linear ≥ 12 inch	± 1/4 inch
Angular	± 2 degrees

Drawing Change Notice

CHANGE DOCUMENT NO.
24590-PTF-VDCN-MS-10-00007

JOB NO.	TITLE FOR CHANGE NOTICE
24590	UFP-VSL-00062A Redesign

DESCRIPTION OF CHANGE

h.) RT per ASME Section VIII Div. 1 Appendix 4: Item 3, delete second sentence "This does not include internal pipe supports and braces".

i.) Connection Schedule block: Change the 'NECK THK' to SCH 160 for the following nozzles:

N09
N28
N32
N38
N44

j.) Connection Schedule block: Change the 'NECK MATERIAL' to SA312 TP316/316L 0.030% MAX C for the following nozzles:

N09
N28
N32
N38
N44

k.) RT per ASME Section VIII Div.1 Appendix 4 block: Change Appendix 4 to read "UW-51".

l.) Under title block, delete BNI reference drawing entitled, "REF DWG 24590-PTF MV-UFP-00005 REV 0".

2. **Affected Document: 24590-QL-POD-MVA0-00001-03-02 (see Attachment 1, page 2 of this VDCN).**

a.) Vessel Elevation View:

(1.) Delete supports and associated part bubbles depicted on drawing.

(2.) Delete support dimensions depicted on drawing.

(3.) Under title block, delete BNI reference entitled, "REF DWG 24590-PTF MV-UFP-00005 REV 0".

3. **Affected Document: 24590-QL-POD-MVA0-00001-03-03 (see Attachment 1, page 3 of this VDCN).**

a.) Vessel Orientation: Delete supports as shown.

b.) Internal Pipe Brace Details: Remove items 54 and 55. NOTE: Pipe Lugs are to remain in place.

c.) Internal Pipe Brace Details: Delete detail and remove components.

d.) Under title block, delete BNI reference drawing entitled, "REF DWG 24590-PTF MV-UFP-00005 REV 0".

4. **Affected Document: 24590-QL-POD-MVA0-00001-03-40 (see Attachment 1, page 4 of this VDCN).**

a.) Elevation View: Delete Elevation View and replace with NORTH ELEVATION VIEW shown on Attachment 1, page 5 of this VDCN.

b.) Internal Vessel Support Orientation: Remove view as this will be covered in Sections B-B, C-C, D-D, E-E, F-F, and G-G shown on Attachment 1, page 5 of this VDCN.

c.) Add BILL OF MATERIALS items 12 through 55 shown on Attachment 1, page 5 of this VDCN.

d.) Add SECTION B-B shown on Attachment 1, page 6 of this VDCN.

e.) Add SECTION J-J and item 12 THERMAL EXPANSION S-BEND shown on Attachment 1, page 6 of this VDCN.

f.) Add SECTION K-K and item 14 THERMAL EXPANSION S-BEND shown on Attachment 1, page 6 of this VDCN.

g.) Add SECTION L-L and item 13 THERMAL EXPANSION S-BEND shown on Attachment 1, page 6 of this VDCN.

h.) Shown on Attachment 1, page 7 of this VDCN, add the following:

(1.) SECTION C-C

(2.) DETAIL-A

(3.) Item 21 - GUIDE RING

(4.) Item 22 - GUIDE RING

(5.) Item 29 - GUIDE RING

(6.) Construction, NOTE 1

Drawing Change Notice

CHANGE DOCUMENT NO.
24590-PTF-VDCN-MS-10-00007

JOB NO.	TITLE FOR CHANGE NOTICE
24590	UFP-VSL-00062A Redesign

DESCRIPTION OF CHANGE

i.) Construction Notes block add the following numbered notes:

NOTE 2: WHERE PLATE MATERIAL IS SPECIFIED AS ASME SA240, ASME SA479 MATERIAL MAY BE SUBSTITUTED.

j.) Add SECTION D-D shown on Attachment 1, page 8 of this VDCN.

k.) Add SECTION E-E shown on Attachment 1, page 8 of this VDCN.

l.) Add Detail C shown on Attachment 1, page 9 of this VDCN.

m.) Add SECTION F-F shown on Attachment 1, page 12 of this VDCN.

n.) Add SECTION G-G shown on Attachment 1, page 12 of this VDCN.

5. **Affected Document: 24590-QL-POD-MVA0-00001-03-22 (see Attachment 1, page 10 of this VDCN).**

a.) Instrument Assy Detail: Remove support item 49 and replace with SECTION H-H and DETAIL-E shown on Attachment 1, page 12 of this VDCN.

b.) Thermowell Assembly: Remove support item 49 and replace with SECTION M-M and DETAIL-D shown on Attachment 1, page 12 of this VDCN.

c.) Under title block, delete BNI reference drawing entitled, "REF DWG 24590-PTF MV-UFP-00005 REV 0".

6. **Affected Document: 24590-QL-POD-MVA0-00001-03-24 (see Attachment 1, page 11 of this VDCN).**

a.) 2" SCH 80 Nozzle W/ int. Projection: Delete N09.

b.) Nozzle Stub Splice: Delete and replace with 'Typical SCH 160 Nozzle Detail.

c.) Typ Lower Support For Dip Tubes: Remove support item 49.

NOTE: This support detail is covered on Vendor drawing 24590-QL-POD-MVA0-00001-03-22 as reflected in item 5 of this VDCN.

d.) Under title block, delete BNI reference drawing entitled, "REF DWG 24590-PTF MV-UFP-00005 REV 0".

7. **Affected Document: 24590-QL-POD-MVA0-00001-03-41 (see Attachment 1, page 13 of this VDCN).**

a.) Typical Outer PJM Pipe Support: Delete Typical Outer PJM Pipe Support view and replace with TYPICAL OUTER PJM SUPPORT, SECTION M-M and associated views shown on Attachment 1, page 16 of this VDCN.

b.) 30" Charge Vessel & Inner PJM: Delete 30" Charge Vessel & Inner PJM view and replace with VIEW A, 30" CHARGE VESSEL & INNER PJM SUPPORT, SECTION P-P, item 54 DETAIL G and associated views shown on Attachment 1, page 14 of this VDCN.

c.) 36" Charge Vessel & Inner PJM Support: Delete 36" Charge Vessel & Inner PJM Support and replace with 36" CHARGE VESSEL & INNER PJM SUPPORT, SECTION N-N, item 35 DETAIL F, and associated views shown on Attachment 1, page 14 of this VDCN.

8. **Affected Document: 24590-QL-POD-MVA0-00001-03-20 (see Attachment 1, page 15 of this VDCN).**

a.) 36" CV Delivery RFD Pump Detail: Remove support item 46 from TYP SUPPORT DETAIL and reference to SEE TYP SUPPORT DETAIL including dimension.

b.) 30" CV Delivery RFD Pump Detail: Remove support item 46 from TYP SUPPORT DETAIL and reference to SEE TYP SUPPORT DETAIL including dimension.

c.) Sampler RFD Pump Detail:

(1.) Remove support item 58 from TYP SUPPORT DETAIL.

(2.) Add DETAIL J, SECTION R-R, and SAMPLER PUMP RFD DETAIL shown on Attachment 1, page 16 of this VDCN.

(3.) Delete Sampler detail and replace with SAMPLER PUMP RFD ASSEMBLY and DETAIL H shown on Attachment 1, page 16 of this VDCN.

d.) Under title block, delete BNI reference drawing entitled, "REF DWG 24590-PTF MV-UFP-00005 REV 0".

Drawing Change Notice

CHANGE DOCUMENT NO.
24590-PTF-VDCN-MS-10-00007

JOB NO.	TITLE FOR CHANGE NOTICE
24590	UFP-VSL-00062A Redesign

DESCRIPTION OF CHANGE

9. **Affected Document: 24590-QL-POD-MVA0-00001-03-23 (see Attachment 1, page 17 of this VDCN).**

a.) 2" SCH 80 CAPPED NOZZLE W/ INT. PROJECTION (detail for N38): Remove item 47 and replace with 2" SCH 160 CAPPED NOZZLE.

b.) 2" SCH 80 CAPPED NOZZLE W/ INT. PROJECTION (detail for N38), change to read as follows: 2" SCH 160 CAPPED NOZZLE W/ INT. PROJECTION.

c.) 2" SCH 80 CAPPED NOZZLE W/ INT. PROJECTION (detail for N38): Change dimension of .218" to read .343".

d.) 4" SCH 80 OUTLET FROM INTERNALS (detail for N28, N29, N30, N32, N44): Delete N28, N32, and N44.

e.) Add SECTION Q-Q, 4" SCH 160 INLET TO INTERNALS shown on Attachment 1, page 6 of this VDCN.

f.) Under title block, delete BNI reference drawing entitled, "REF DWG 24590-PTF MV-UFP-00005 REV 0".

ORIGINATOR	CHECKER
M. Mudry	L. Rodgers

Reviews

CON - K. Keck R ZIELINSKI for K Keck per CCN 227733 Ramona Zielinski	E&NS - J. Rathbun	CS&A - S. Germain	MET - J. Disney
MS&PE - D. Vo	PD - J. McGrath	~~PE&T - B. Stiver~~ BAS 12/22/10 PE&T - J. Olson	

Approval(s)

PEQ - J. Julyk			

Date *(inserted by final approver)*: 12/23/10

appear to be illegible, however, the information necessary is legible.

CHANGE N09, N28, N32, N38, AND N44 TO SCH 160 - (BY RPP-WTP), AND CHANGE MATERIAL TO: SA312 TP316/316L 0.030% max C (BY RPP-WTP)

DELETE AND REPLACE, BY RPP-WTP

DESIGN CONDITIONS

SPECIFICATIONS	PARENT VESSEL
DESIGN PRESSURE	~~15/-10.29 psig~~ 15/-2.0 BY RPP-WTP
HYDRO-TEST PRESSURE	19.5 psig + 19.5 psig SH
DESIGN TEMPERATURE	~~120° F~~ 230°F BY RPP-WTP
MDMT	40° F
CODE	ASME SECTION VIII, DIVISION I, 2001 EDITION, 2001 ADDENDUM
CODE STAMP (National Board No.)	REQUIRED
NON-DESTRUCTIVE TESTING	VT, UT, PT, RT, HELIUM TESTING, AND HYDROSTATIC TESTING PER ASME SECT. VIII, DIV. I
RADIOGRAPH /5\	PER PARA. 6.5.3 OF SPECIFICATION 24590-WTP-3PN-MV00-00006
JOINT EFFICIENCY	PER UW-12
CORROSION ALLOWANCE	0.04"
INSPECTION OPENINGS	REQUIRED PER UG-46(a)
IMPACT TESTING	NOT REQUIRED PER UHA-51(d)
POSTWELD HEAT TREATING	NOT REQUIRED PER UHA-32
MATERIAL, BOLTS/STUDS/NUTS	NOT APPLICABLE
MATERIAL, GASKETS	NOT APPLICABLE
INSULATION	NOT REQUIRED
WIND DESIGN	NOT REQUIRED
SNOW DESIGN	NOT REQUIRED
SEISMIC DESIGN	SC-I PER 24590-WTP-3PS-MV00-T0002 & 24590-WTP-3PS-SS90-T0001
BECHTEL QUALITY LEVEL	QL-I

/1A\ /2\ /3\ BILL OF MATERIALS

CHANGE ITEM 47 AS FOLLOWS: THICK/SIZE = SCH 160; MATERIAL = SA403 TP316/316L w 0.03% max C BY RPP-WTP

MK	THICK/SIZE	MATERIAL	HEAT NO.	DESCRIPTION	QTY
1	⅜"	SA-240-316 w/ 0.030% max. C		SHELL	1
2	⅜" NOM.	SA-240-316 w/ 0.030% max. C		TOP HEAD - 180" I.D. 2:1 SE w/ 2" S.F. (5/16" MIN. AFTER FORMING)	1
3	⅜" NOM.	SA-240-316 w/ 0.030% max. C		BOTTOM HEAD - 180" I.D. 2:1 SE w/ 2" S.F. (5/16" MIN. AFTER FORMING)	1
4					
5	⅜"	SA-240-304 w/ 0.030% max. C		SUPPORT SKIRT	1
6	1½"	SA-240-304 w/ 0.030% max. C		SUPPORT RING BEAM TOP	1
7	1"	SA-240-304 w/ 0.030% max. C		SUPPORT RING BEAM SHELL	1
8	1½"	A-572-Gr50		SUPPORT RING BEAM BOTTOM	1
9					
10 /3\	1"	SA-240-316 w/ 0.030% max. C		TAILING LUG BACKING PLATE - 20" x 20"	1
11	3"	SA-240-304 w/ 0.030% max. C		TAILING LUG	1
12	1"	SA-240-304 w/ 0.030% max. C		TAILING LUG GUSSET	1
13	---	--------		DELETED	-
14					
15					
16					
17	½"	SA-240-316 w/ 0.030% max. C		LIFTING TRUNNION REPAD - 22" O.D.	2
18	½"	SA-240-304 w/ 0.030% max. C		LIFTING TRUNNION BARREL - 16" O.D. x 4" LONG	2
19	½"	SA-240-304 w/ 0.030% max. C		LIFTING TRUNNION KEEPER PLATE - 24" O.D.	2
20					
21	½"	SA-240-316 w/ 0.030% max. C		INSTRUMENT ASSEMBLY COVER PLATE	1
22	¼" x 1"	SA-240-316 w/ 0.030% max. C		INSTRUMENT ASSEMBLY SPACERS	28
23	2" SCH 160	SMLS. SA-312-TP316 w/ 0.030% max. C		BUBBLER SHELL	2
24	2" x 1"	SMLS. SA-312-TP316 w/ 0.030% max. C		BUBBLER REDUCER - 2 x 1, SCH 160	2
25	⅜" NOM.	SA-182-F316 w/ 0.030% max. C		MANWAY HEAD, 24" O.D. ASME F&D w/ 1½" S.F.	1
26					
27					
28					
29					
30	1½"ø	SA-182-F316 w/ 0.030% max. C		THERMOWELL POCKET (MACHINE PER DETAIL)	1
31	1" SCH 160	SMLS. SA-312-TP316 w/ 0.030% max. C		THERMOWELL DIP TUBE	2
32	2" SCH 40	SMLS. SA-312-TP316 w/ 0.030% max. C		WASH RING PIPE	1
33	⅜"	SA-240-316 w/ 0.030% max. C		WASH RING END CAP PLATE	6
34	⅜" x 2"	SA-240-316 w/ 0.030% max. C		WASH RING SUPPORTS	6
35	2" SCH 40	SMLS. SA-403-WP316S w/ 0.030% max. C		WASH RING TEE - 2" SCH 40 STRAIGHT TEE	3
36					
37	⅜"	SA-240-316 w/ 0.030% max. C		NAMEPLATE BRACKET (14" x 14" 'U' w/ 2" LEGS) /4\	1
38					
39	MISC.	SA-240-316 w/ 0.030% max. C		PULSE JET MIXER (B)- SEE DWG. 3005A FOR DETAILS	6
40	MISC.	SA-240-316 w/ 0.030% max. C		CHARGE VESSEL (36") - SEE DWG. 3005B FOR DETAILS	3
41	—	———		DELETED	-
42	MISC.	SA-240-316 w/ 0.030% max. C		CHARGE VESSEL (30") - SEE DWG. 3005D FOR DETAILS	2
43	½"	SA-240-304 w/ 0.030% max. C		SKIRT ACCESS (24" ø)	2
44	~~MISC.~~	~~SA-240-316 w/ 0.030% max. C~~		~~CHARGE VESSEL (18") - SEE DWG. 3005E FOR DETAILS~~	1
45	4" SCH 40	SA-312-TP316 w/ 0.030% max. C		SKIRT VENT (4½")	4
46	~~1" SCH 160~~	~~SA-312-TP316 w/ 0.030% max. C~~		~~INTERNAL PIPING SUPPORT~~	~~10~~
47	~~STD.~~	~~SA-403-316 w/ 0.030% max. C~~		~~2" SCH 80 CAP~~ 2" SCH 160 CAP	1
48	—	———		DELETED	-
49	~~⅜" x 2"~~	~~SA-240-316 w/ 0.030% max. C~~		~~INTERNAL PIPING LOWER SUPPORT~~	~~A/R~~
50	6" SCH 80	SA-312-TP316 w/ 0.030% max. C		CONNECTING PIPE, LENGTH A/R	5
51	1¼"	SA-240-316 w/ 0.030% max. C		INSERT PLATE (15" OD)	1
52	Sch 160	SA-403WP-316 w/ 0.030% max. C		4" x 3" ECC. REDUCER - ENDS MACHINED TO SCH 80	5
53	4" SCH 80	SA-312-TP316 w/ 0.030% max. C		CONNECTING PIPE, LENGTH A/R	5
54	~~1¼" x 8" x 3"~~	~~SA-479-316 w/ 0.030% max. C~~		~~INTERNAL PIPING SUPPORT ANGLE~~	~~10~~
55	~~⅜"~~	~~SA-479-316 w/ 0.030% max. C~~		~~INTERNAL PIPING SUPPORT FORMED U-BOLT FOR 1" PIPE~~	~~20~~
56	1" SCH 160	SA-312-TP316 w/ 0.030% max. C		CONNECTING PIPE, LENGTH A/R	1
57	1" SCH 160	SA-312-TP316 w/ 0.030% max. C		CONNECTING PIPE, LENGTH A/R	1
58	~~½" SCH 160~~	~~SA-312-TP316 w/ 0.030% max. C~~		~~INTERNAL PIPING SUPPORT~~	~~2~~

DELETE LINE ITEMS: 46, 49, 54, 55, 58 BY RPP-WTP

CHANGE ITEM 47 TO 2" SCH 160 CAP BY RPP-WTP

ADD ITEM 59 - BY RPP-WTP

ADD ITEM 60 - BY RPP-WTP

/2\ /1A\ /1\ CONNECTION SCHEDULE

MK	SIZE	NECK MATERIAL	NECK THK	HEAT NO.	DESCRIPTION	ELEV. "Z"	ELEV. "X"	RADIUS FROM CENTER	TYPE	CONN. THK
N05	2" OD	MACHINED SA-182-F316 w/ 0.030% max. C	SPCL		TEMPERATURE /4\	306"	51"	30"	STUB	¾" SCH 10
N06	6" NPS	SEAMLESS SA-312-TP316 w/ 0.030% max. C	SCH 80		INSTRUMENTATION /4\	308½"	53½"	30"	STUB	NA
N06A	1" NPS	SEAMLESS SA-312-TP316 w/ 0.030% max. C	SCH 160		BALANCE	314"	59"	30"	STUB	1" SCH 40
N06B	1" NPS	SEAMLESS SA-312-TP316 w/ 0.030% max. C	SCH 160		DENSITY	315"	60"	30"	STUB	1" SCH 40
N06C	1" NPS	SEAMLESS SA-312-TP316 w/ 0.030% max. C	SCH 160		LEVEL	316"	61"	30"	STUB	1" SCH 40
N07	2" NPS	SEAMLESS SA-312-TP316 w/ 0.030% max. C	SCH 80		INLET	298"	43"	60"	STUB	2" SCH 40
N09	2" NPS	~~SEAMLESS SA-312-TP316 w/ 0.030% max. C~~	~~SCH 80~~	SCH 160	INLET	307"	52"	30"	STUB	2" SCH 40
N10	2" NPS	SEAMLESS SA-312-TP316 w/ 0.030% max. C	SCH 80		INLET	305"	50"	39"	STUB	2" SCH 40
N11	2" NPS	SEAMLESS SA-312-TP316 w/ 0.030% max. C	SCH 80		INLET/AIR PURGE	303"	48"	45"	STUB	2" SCH 40
N12	2" OD	MACHINED SA-182-F316 w/ 0.030% max. C	SPCL		AIR/VAC TO UFP-VSL-00034 /4\	291½"	36½"	72"	STUB	1" SCH 40
N13	2" OD	MACHINED SA-182-F316 w/ 0.030% max. C	SPCL		OUTLET/SAMPLE (UFP-RFD-00030) /4\	306½"	51½"	30"	STUB	1" SCH 40
N14	2" NPS	SEAMLESS SA-312-TP316 w/ 0.030% max. C	SCH 80		SAMPLE RETURN /4\	304"	49"	39"	STUB	2" SCH 40
N16	2" NPS	SEAMLESS SA-312-TP316 w/ 0.030% max. C	SCH 160		AIR/VAC TO UFP-PJM-00018	298"	43"	60"	STUB	2" SCH 40
N17	2" NPS	SEAMLESS SA-312-TP316 w/ 0.030% max. C	SCH 160		OUTLET TO EJECTOR	NA	NA	NA	STUB	2" SCH 40
N18	2" NPS	SEAMLESS SA-312-TP316 w/ 0.030% max. C	SCH 160		AIR/VAC TO UFP-PJM-00019	303"	48"	45"	STUB	2" SCH 40
N19	2" NPS	SEAMLESS SA-312-TP316 w/ 0.030% max. C	SCH 160		AIR/VAC TO UFP-PJM-00020 /4\	297½"	42½"	60"	STUB	2" SCH 40
N20	2" NPS	SEAMLESS SA-312-TP316 w/ 0.030% max. C	SCH 160		AIR/VAC TO UFP-PJM-00021	303"	48"	45"	STUB	2" SCH 40
N21	2" NPS	SEAMLESS SA-312-TP316 w/ 0.030% max. C	SCH 160		AIR/VAC TO PWD-PJM-00022	298"	43"	60"	STUB	2" SCH 40
N22	6" NPS	SEAMLESS SA-312-TP316 w/ 0.030% max. C	SCH 80		OUTLET/VESSEL VENT /4\	310¼"	55¼"	CENTER	STUB	6" SCH 10
N23	3" NPS	SEAMLESS SA-312-TP316 w/ 0.030% max. C	SCH 80		AIR/VAC TO UFP-VSL-00052	293"	38"	69"	STUB	3" SCH 40
N24	3" NPS	SEAMLESS SA-312-TP316 w/ 0.030% max. C	SCH 80		AIR/VAC TO UFP-VSL-00033 /4\	290⅞"	35⅞"	72"	STUB	3" SCH 40
N25	3" NPS	SEAMLESS SA-312-TP316 w/ 0.030% max. C	SCH 80		AIR/VAC TO UFP-VSL-00072 /4\	290⅞"	35⅞"	72"	STUB	3" SCH 40
N26	3" NPS	SEAMLESS SA-312-TP316 w/ 0.030% max. C	SCH 80		AIR/VAC TO UFP-VSL-00073 /4\	292⅞"	37⅞"	69"	STUB	3" SCH 40
N28	4" NPS	~~SEAMLESS SA-312-TP316 w/ 0.030% max. C~~	~~SCH 80~~	SCH 160	OUTLET FROM UFP-RFD-00037 /4\	307⅞"	52⅞"	16"	STUB	4" SCH 40
N29	4" NPS	SEAMLESS SA-312-TP316 w/ 0.030% max. C	SCH 80		OUTLET FROM UFP-RFD-00038 /4\	307⅞"	52⅞"	12"	STUB	4" SCH 40
N30	4" NPS	SEAMLESS SA-312-TP316 w/ 0.030% max. C	SCH 80		OUTLET FROM UFP-RFD-00028 /4\	307⅛"	52⅛"	16"	STUB	4" SCH 40
N32	4" NPS	~~SEAMLESS SA-312-TP316 w/ 0.030% max. C~~	~~SCH 80~~	SCH 160	OUTLET FROM UFP-RFD-00027 /4\	307⅛"	52⅛"	16"	STUB	4" SCH 40
N34	2" NPS	SEAMLESS SA-312-TP316 w/ 0.030% max. C	SCH 80		INLET TO WASH RING	293"	38"	70"	STUB	2" SCH 40
N35	2" NPS	SEAMLESS SA-312-TP316 w/ 0.030% max. C	SCH 80		INLET TO WASH RING /4\	292½"	37½"	70"	STUB	2" SCH 40
N36	2" NPS	SEAMLESS SA-312-TP316 w/ 0.030% max. C	SCH 80		INLET TO WASH RING /4\	292½"	37½"	70"	STUB	2" SCH 40
N37	6" NPS	SEAMLESS SA-312-TP316 w/ 0.030% max. C	SCH 80		OUTLET/OVERFLOW	NA	NA	NA	STUB	6" SCH 10
N38	2" NPS	~~SEAMLESS SA-312-TP316 w/ 0.030% max. C~~	~~SCH 80~~	SCH 160	SPARE /4\	307½"	52½"	16"	STUB	CAPPED
N39	24" OD	WELDED SA-240-316 w/ 0.030% max. C	⅜"		MANWAY (TACKED CAP)	300"	45"	60"	STUB	CAPPED
N40	3" NPS	SEAMLESS SA-312-TP316 w/ 0.030% max. C	SCH 80		SPARE /4\	306⅝"	51⅝"	30"	STUB	3" SCH 40
N41	2" NPS	SEAMLESS SA-312-TP316 w/ 0.030% max. C	SCH 160		AIR/VAC TO UFP-PJM-00052 /4\	302½"	47½"	45"	STUB	2" SCH 40
N44	4" NPS	~~SEAMLESS SA-312-TP316 w/ 0.030% max. C~~	~~SCH 80~~	SCH 160	OUTLET FROM UFP-RFD-00044	309"	54"	12"	STUB	4" SCH 40
N45	3" NPS	SEAMLESS SA-312-TP316 w/ 0.030% max. C	SCH 80		AIR/VAC TO UFP-VSL-00082 /4\	293⅛"	38⅛"	69"	STUB	3" SCH 40
N46	2" NPS	SEAMLESS SA-312-TP316 w/ 0.030% max. C	SCH 80		FORCED AIR PURGE /4\	304⅞"	49⅞"	39"	STUB	2" SCH 40

/2\ GENERAL NOTES and SPECIAL REQUIREMENTS

1. NWC Quality Assurance Manual ASME NQA-1 applies in its entirety for this project.
2. All material, including weld wire, for this project shall be purchased from approved Level 3 & 4 suppliers.
3. All 316SS material, including weld wire, shall be PMI tested and approved prior to use.
4. No deviation from this drawing is allowed without Bechtel approval.
5. The base of the vessel support skirt shall be marked, using a line of welding bead, at the 0° orientation as shown on the drawing. Trial fit assembly required for markup. Skirt base to be suitably reinforced prior to shipment.
6. A datum line shall be marked on the heads with low stress stamping 2" away from the head/shell seam.
7. Contact materials shall be approved prior to use. This is to include marking material, lubricants, tape, anti-spatter spray, harmful metals or salts such as zinc, lead, or copper, etc. Total halogens in the contact materials shall be less than 200 ppm.
8. Fabrication tolerance shall be in accordance with Bechtel drawing Pressure Vessel Tolerances Standard Details DWG. # 24590-WTP-MV-M59T-00001.
9. Plate 3/8" and over in thickness shall not be sheared to size. All lubricants, burrs, and debris shall be removed after cutting.
10. Internal piping bends shall have a center line radius of four times the pipe nominal diameter. A pipe shall not be terminated or butt-welded within 4" of the bend.
11. Longitudinal seams shall be completed and have successfully passed any NDE prior to welding any adjoining circumferential seams.
12. Manway cover head shall be prepared for field welding, tacked into place with 4 @ ½" long tacks 90° apart, sealed to prevent dirt and water entry, and marked with the item number.
13. Nozzles shall be prepared for field welding, shall be covered with a hard rubber or plastic cap, and shall be sealed to prevent dirt or water entry.
14. All attachments e.g. lugs, brackets, nozzles and other members shall follow the contour of the surface to which they will be attached. The gap at the exposed edges shall not exceed 1/16" prior to welding.
15. All attachments that use only fillet welds shall have a maximum gap of 1/8" between the components being joined.
16. All temporary attachments shall be 316 stainless steel.
17. All temporary attachments shall be removed prior to hydrostatic test.
18. PMI to be performed on all pressure retaining items including welds after fabrication.

UT per ASME Section VIII Div. I Appendix 12 /4\

1. The shell and head sections under the lifting lugs, tailing lugs, and internal vessel supports shall be ultrasonically examined over 100% of the area that extends 5" beyond each side of the perimeter of the proposed fillet weld attachment to the shell or head.
2. All welds attaching internal or external components to the shell or heads shall be ultrasonically examined. This examination does not include nozzle to vessel wall welds.
3. All shell and head sections for 3" around nozzle penetrations shall be ultrasonically examined prior to welding.
4. All nozzle welds to the shell or head with internal projection shall be ultrasonically examined.

PT per ASME Section VIII Div. I Appendix 8 /1A\ /3\ /4\

1. All welds over 3/4" in 304 & 316 series Stainless Steel shall be dye penetrant examined.

CHANGE TO UW-51 BY RPP-WTP

RT per ASME Section VIII Div. I ~~Appendix 4~~ /1A\ /3\ /4\

1. All butt welds in the shell shall be 100% radiographically examined.
2. All nozzle welds to the shell or head without internal projection shall be radiographically examined.
3. Butt welds in internal piping shall be radiographically examined. ~~This does not include internal pipe supports and braces.~~ DELETED BY RPP-WTP
4. All butt welds in the nozzle necks shall be radiographically examined.
5. All thermowell socket welds shall be radiographically examined.

OPERATING: 512,285 lbs
FULL WATER: 401,100 lbs
EMPTY: 103,000 lbs
BY RPP-WTP

Helium Leak Test

1. All thermowell socket welds shall be helium leak tested.

/4\

UB 2022
CERTIFIED BY:
NORTHWEST COPPER WORKS, INC.
PORTLAND, OREGON 97227
15/-10.29 PSI AT 120° F
MAXIMUM ALLOWABLE WORKING PRESSURE
40° F AT 15/-10.29 PSI
MINIMUM DESIGN METAL TEMPERATURE
3005
SERIAL NUMBER
2004
YEAR BUILT
JOB No.: 24590
CONTRACT No.: DE-AC27-01RV14136
PLANT ITEM NO.: UFP-VSL-00062A
FABRICATION SPEC: 24590-WTP-3PS-MV00-T0001
DESIGN PRESSURE: 15 PSIG
EXTERNAL PRESSURE: 10.29 PSIG
HYDROTEST PRESSURE: 19.5 PSIG AT TOP
DESIGN TEMPERATURE: 120 °F
MIN DESIGN METAL TEMP: 40 °F
MATERIAL OF CONSTRUCTION: 316SS/0.030%MAX.C
ERECTED WEIGHT: 100,000 LBS.

/4\ /3\ /2\ /1A\

24590-PTF-MV-UFP-VSL-00062A
Bechtel National, Inc. — Job No. 24590
SUPPLIER DOCUMENT STATUS
1. [X] Work may proceed.
2. [ ] Revise and resubmit. Work may proceed subject to resolution of indicated comments.
3. [ ] Revise and resubmit. Work may not proceed.
4. [ ] Review not required. Work may proceed.
Permission to proceed does not constitute acceptance or approval of design details, calculations, analyses, test methods, or materials developed or selected by the supplier and does not relieve supplier from full compliance with contractual obligations.
REVIEWED: M / MV
G-321 Document Category: 1.1
[From Supplement A to G-321-E (E) or G-321-V (V), as applicable, or "N/A" if ESRS is used]
Supersedes BNI Document No. ___ Rev ___ [When applicable]
Accepted by: H. KHURANA (signature) 01/13/05
Released by [When applicable]

REVISIONS

NO	DESCRIPTION	REV BY	APD BY	DATE
5	UPDATED RADIOGRAPH SPEC. REFERENCE	SMT	MJV	12/06/04
4	REVISED PER CUSTOMER COMMENTS & ENGINEERING CHANGES	SMT	MJV	11/05/04
3	REVISED PER CUSTOMER COMMENTS & ENGINEERING CHANGES	SMT	MJV	06/07/04
2	REVISED PER CUSTOMER COMMENTS & ENGINEERING CHANGES	MDH	MJV	09/03/03
1A	REVISED PER CUSTOMER COMMENTS & ENGINEERING CHANGES	MDH	MJV	07/06/03
1	REVISED PER CUSTOMER COMMENTS & ENGINEERING CHANGES	MJV	MDH	04/28/03

ESTIMATED WEIGHT: (IN LBS)
OPERATING - ~~422,100 lbs.~~
FULL WATER - ~~407,100 lbs.~~
EMPTY - ~~100,000 lbs.~~

NORTHWEST COPPER WORKS, INC.
1303 N. RIVER STREET * PORTLAND, OREGON * 97227

180" I.D. ULTRAFILTER PERMEATE COLLECTION VESSEL

BECHTEL NATIONAL INC.
3000 George Washington Way
Richland, Washington 99352

EQUIP. NO. UFP-VSL-00062A	P.O. NO. 24590-QL-POD-MVA0-00001 REV 0	
SCALE AS NOTED	JOB NO. 3005	DWG. NO. D- 3005 — REV 5
DATE 01/17/03	CHKD. BY KRT	
DWN. BY MDH	APPD. BY MDH	SHT. NO. 1 OF 8

BECHTEL NATIONAL INC. FOR D.O.E.
RIVER PROTECTION PROJECT IN RICHLAND, WA ~~REF. DWG. 24590-...-MV-UFP-00062 REV ...~~ BECHTEL DOC. 24590-QL-POD-MVA0-00001-05-01 REV 00E
DELETED BY RPP-WTP

\Swap\ACAD\03\D3005-5 PRELIM Mon Dec 06 09:41:55 2004

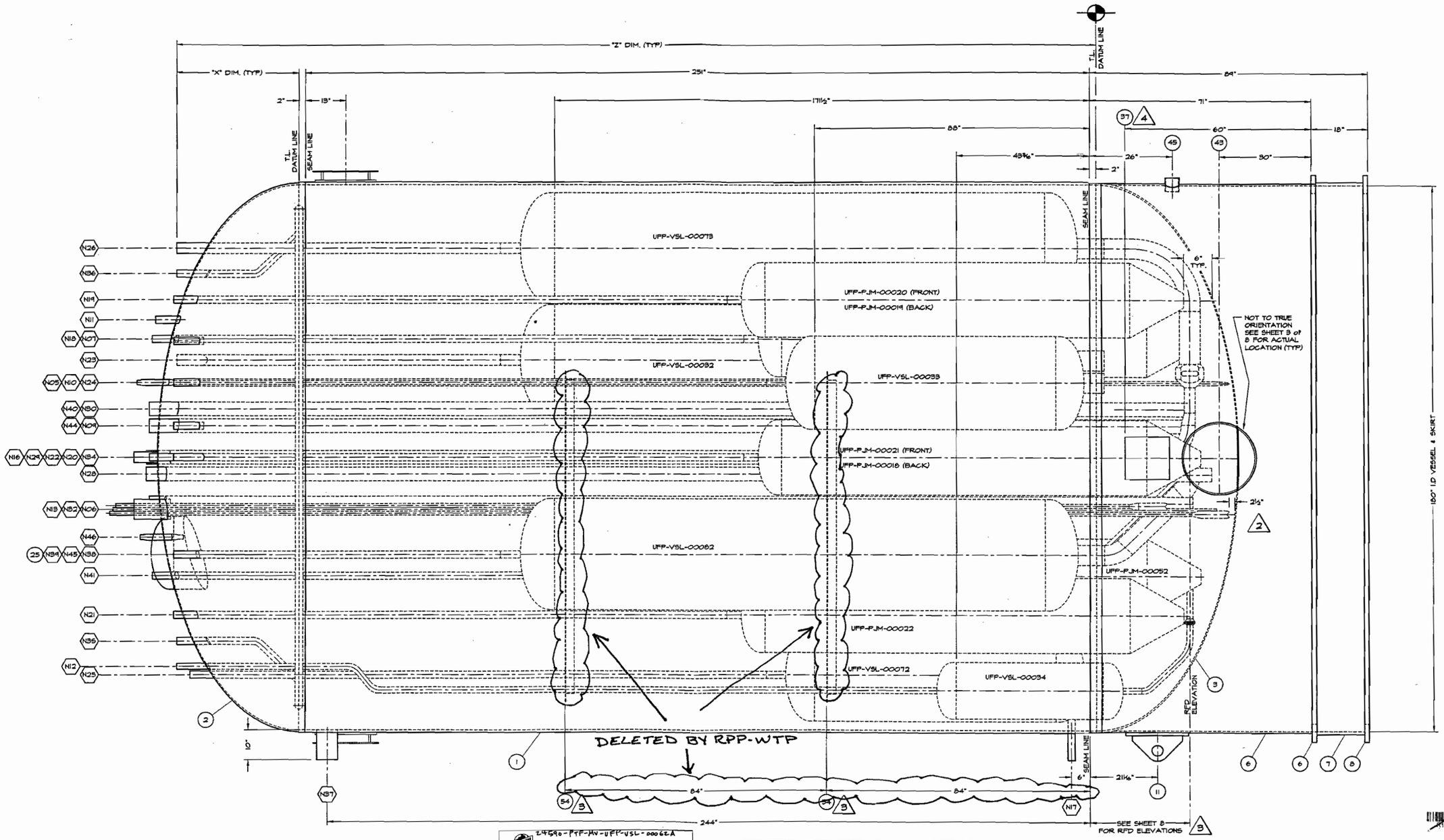

2 1A VESSEL ELEVATION
SCALE: ⅜" = 1'-0"

24590-PTF-MV-UFP-VSL-00062A

Job No. 24590

Bechtel National, Inc.

SUPPLIER DOCUMENT STATUS

1. ☒ Work may proceed.
2. ☐ Revise and resubmit. Work may proceed subject to resolution of indicated comments.
3. ☐ Revise and resubmit. Work may not proceed.
4. ☐ Review not required. Work may proceed.

Permission to proceed does not constitute acceptance or approval of design details, calculations, analyses, test methods, or materials developed or selected by the supplier and does not relieve supplier from full compliance with contractual obligations.

REVIEWED MK

G-321 Document Category 1; 1
[From Supplement A to G-321-E (E) or G-321-V (V), as applicable, or "N/A" if SSRS is used]

Supersedes BNI Document No. _____ Rev. _____
[When applicable]

Accepted by H. KHURAMA 01/13/05
Print Name Signature Date

Released by: _____
[When applicable] Print Name Signature Date

FM QP4.3-F1

REVISIONS

NO	DESCRIPTION	REV BY	APD BY	DATE
5	NO CHANGES	SMT	MJV	12/06/04
4	ADDED NAMEPLATE ELEVATION	SMT	MJV	11/05/04
3	REVISED PER CUSTOMER COMMENTS AND ENGINEERING CHANGES	SMT	MJV	06/07/04
2	REVISED PER CUSTOMER COMMENTS AND ENGINEERING CHANGES	MDH	MJV	04/09/03
1A	REVISED PER CUSTOMER COMMENTS AND ENGINEERING CHANGES	MDH	MJV	07/16/03
1	REVISED PER CUSTOMER COMMENTS & ENGINEERING CHANGES	MJV	MDH	04/28/03

NORTHWEST COPPER WORKS, INC.
1503 N. RIVER STREET • PORTLAND, OREGON • 97227

180" I.D. ULTRAFILTER PERMEATE COLLECTION VESSEL ELEVATION

BECHTEL NATIONAL INC.
3000 George Washington Way
Richland, Washington 99352

EQUIP. NO. UFP-VSL-00062A
P.O. NO. 24590-PTF-PO-MV-A0-00001 REV 0
SCALE ⅜" = 1'-0"
JOB NO. 3005
DWG. NO. D-3005
REV 5
DATE 01/7/03
CHKD. BY KRT
DWN. BY MDH
APPD. BY MDH
SHT. NO. 2 OF 8

~~REF: DWG 24590-PTF-MV-UFP-S0005 REV 0~~ 01/26/07
BECHTEL DOC. 24590-QL-POD-MVA0-00001-03-02 REV. 0
Rev. 00F
DELETED BY RPP-WTP

10443771

10/KALAU/03/03005-5 PRELIM Mon Dec 06 09:41:45 2004

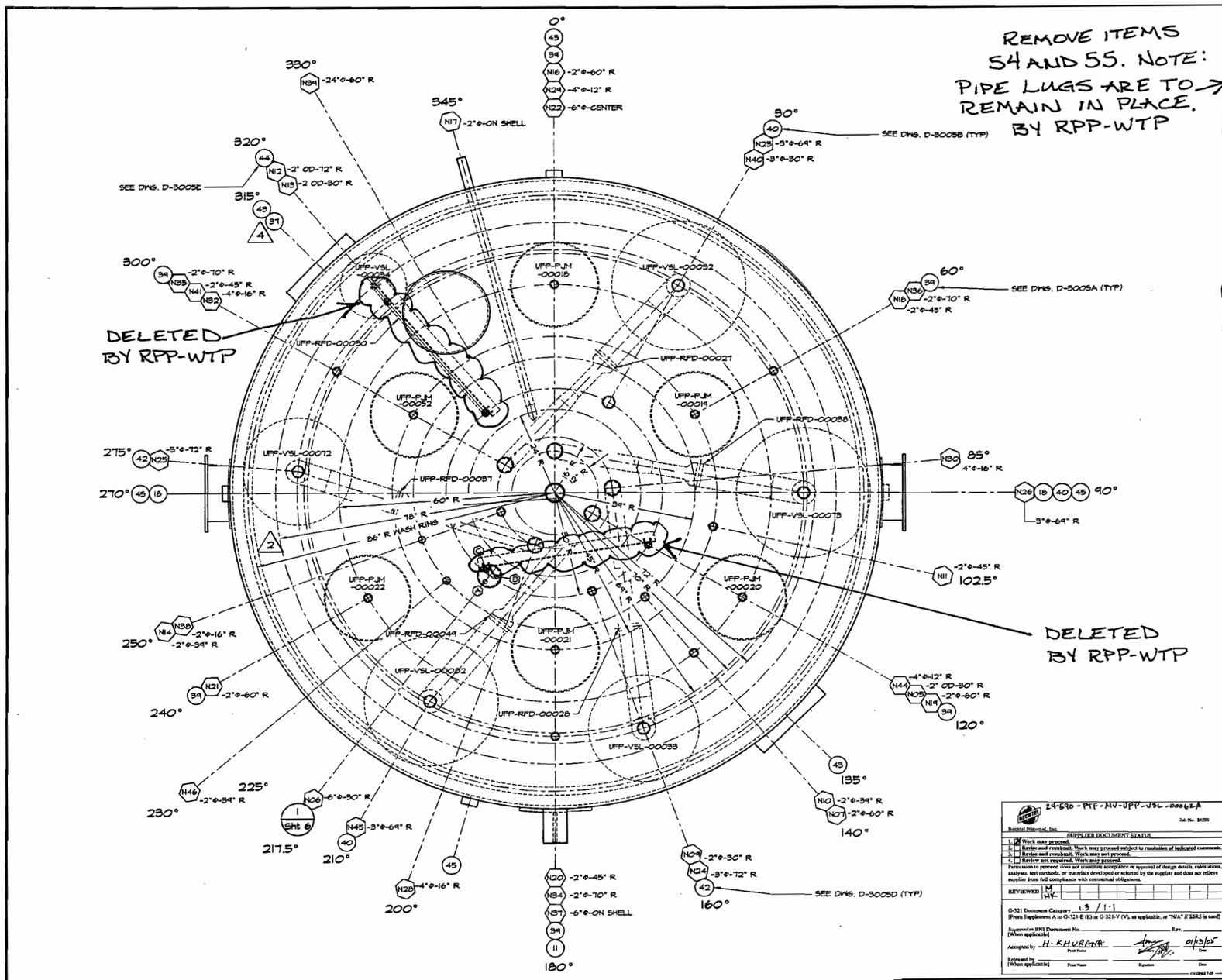

REMOVE ITEMS 54 AND 55. NOTE: PIPE LUGS ARE TO REMAIN IN PLACE. BY RPP-WTP

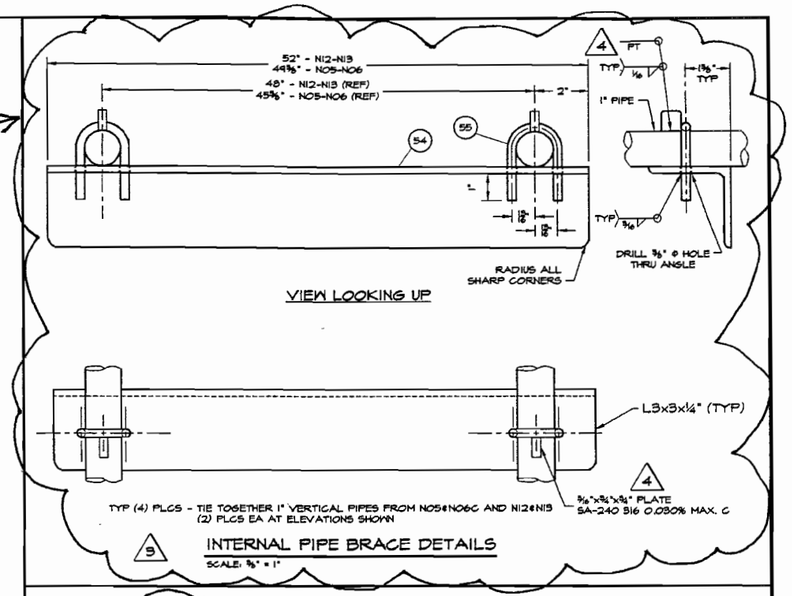

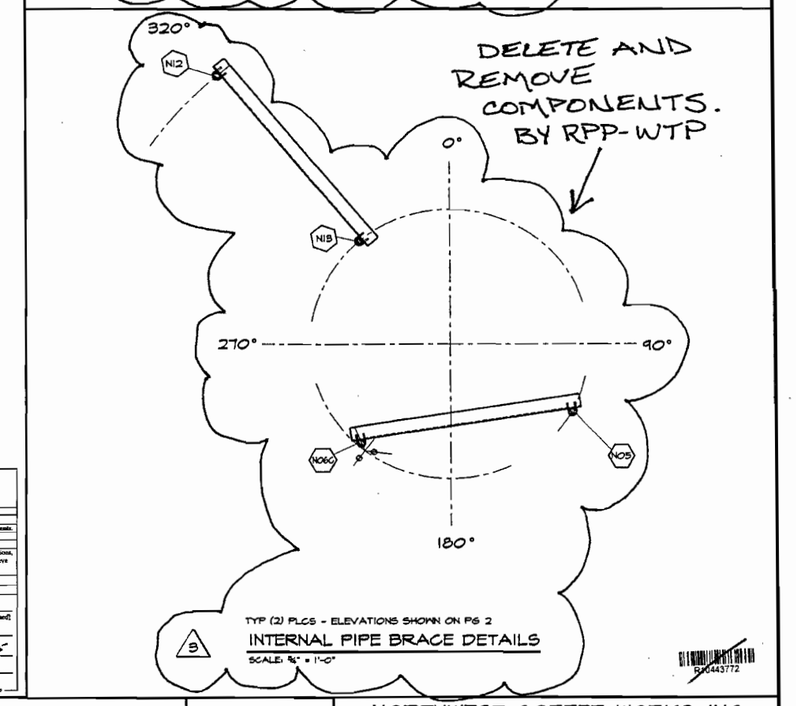

24590-PTF-MV-UPP-VSL-00062A

Bechtel National, Inc. Job No. 24590

SUPPLIER DOCUMENT STATUS

1. ☒ Work may proceed.
2. ☐ Revise and resubmit. Work may proceed subject to resolution of indicated comments.
3. ☐ Revise and resubmit. Work may not proceed.
4. ☐ Review not required. Work may proceed.

Permission to proceed does not constitute acceptance or approval of design details, calculations, analyses, test methods, or materials developed or selected by the supplier and does not relieve supplier from full compliance with contractual obligations.

REVIEWED M HK

G-321 Document Category 1.9 / 1-1
[From Supplement A to G-321-E (E) or G-321-V (V), as applicable, or "N/A" if SSRS is used]

Supersedes BNI Document No. _____ Rev. _____
[When applicable]

Accepted by H. KHURANA Print Name — Signature — 01/13/05 Date

Released by _____ Print Name — Signature — Date
[When applicable]

△4 △3 △2 △1A VESSEL ORIENTATION
SCALE: 3/8" = 1'-0"

REVISIONS

NO	DESCRIPTION	REV BY	APD BY	DATE
5	NO CHANGES	SMT	MJV	12/06/04
4	REVISED PER CUSTOMER COMMENTS & ENGINEERING CHANGES	SMT	MJV	11/05/04
3	REVISED PER CUSTOMER COMMENTS & ENGINEERING CHANGES	SMT	MJV	08/07/04
2	REVISED PER CUSTOMER COMMENTS & ENGINEERING CHANGES	MDH	MJV	04/03/03
1A	REVISED PER CUSTOMER COMMENTS & ENGINEERING CHANGES	MDH	MJV	07/18/03
1	REVISED PER CUSTOMER COMMENTS & ENGINEERING CHANGES	MJV	MDH	04/28/03

NORTHWEST COPPER WORKS, INC.
1303 N. RIVER STREET • PORTLAND, OREGON • 97227

180" I.D. ULTRAFILTER PERMEATE COLLECTION VESSEL PLAN

BECHTEL NATIONAL INC.
3000 George Washington Way
Richland, Washington 99352

SCALE 3/8" = 1'-0"	JOB NO. 3005	EQUIP. NO. UFP-VSL-00062A	
DATE 01/17/03	CHKD. BY KRT	P.O. NO. 24590-QL-POD-MVAO-00003 REV 0	
DWN. BY MDH	APPD. BY MDH	DWG. NO. D- 3005	REV 5
		SHT. NO. 3 OF 8	

REF: DWG 24590-PTF-MV-UFP-00003-REV-00 pgs 12/09/04
BECHTEL DOC. 24590-QL-POD-MVAO-00001-03-03 REV. 00 pg 5
DELETED BY RPP-WTP

P:\Swep\ACAD\03\03005-5 PRELIM Mon Dec 06 09:41:35 2004

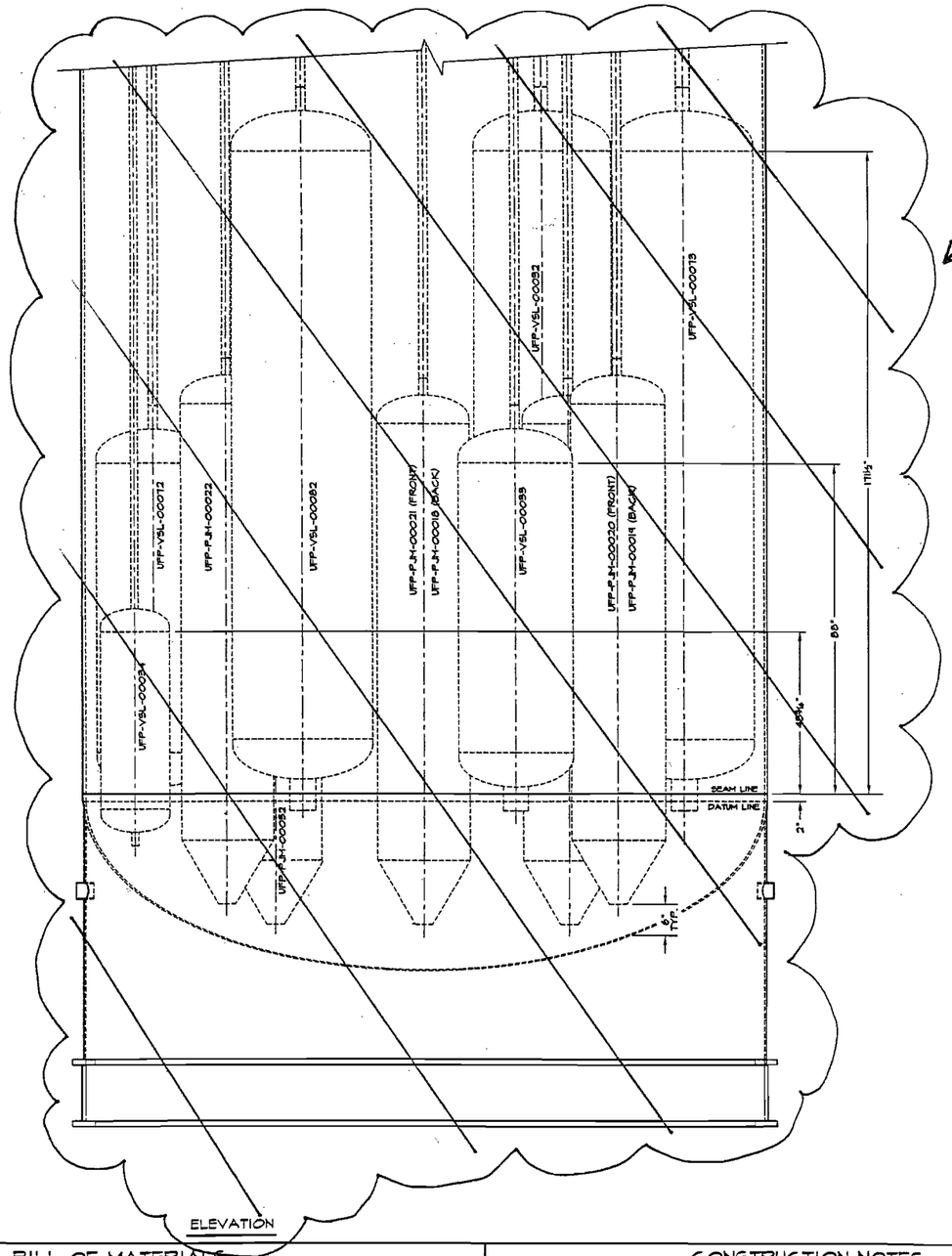

ELEVATION

DELETED BY RPP-WTP

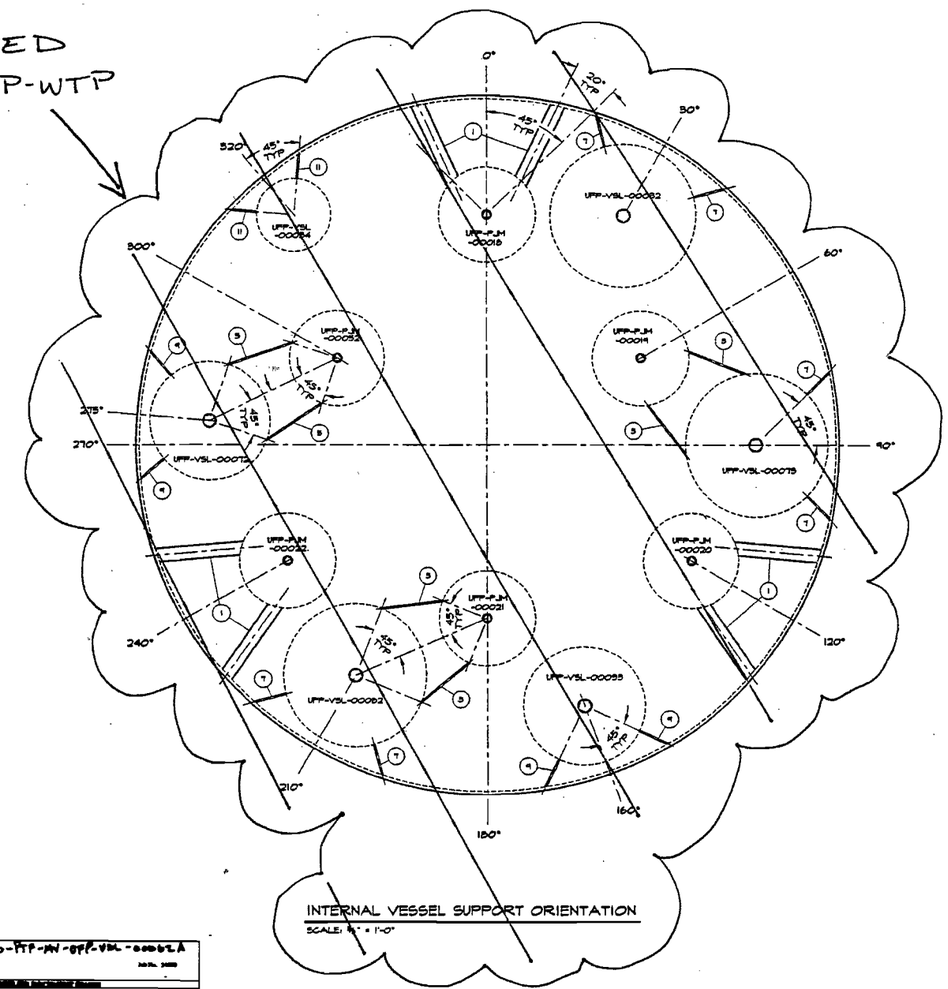

INTERNAL VESSEL SUPPORT ORIENTATION
SCALE: ¾" = 1'-0"

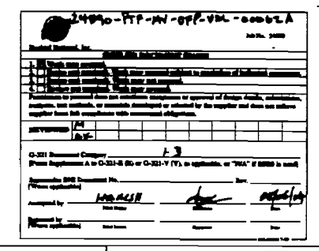

Some information on page this may appear to be illegible, however, the information necessary is legible.

BILL OF MATERIALS

MK	THICK/SIZE	MATERIAL	HEAT NO.	DESCRIPTION	QTY
1	4" SCH 40	WELDED SA-312-TP316 w/ 0.030% max. C		OUTER PULSE JET MIXER SUPPORT PIPE	12
2					
3	½"	SA-240-316 w/ 0.030% max. C		INNER PULSE JET MIXER SUPPORT PLATE (@ 36" CV)	8
4					
5	½"	SA-240-316 w/ 0.030% max. C		INNER PULSE JET MIXER SUPPORT PLATE (@ 30" CV)	4
6					
7	½"	SA-240-316 w/ 0.030% max. C		36" CHARGE VESSEL SUPPORT PLATE	12
8					
9	½"	SA-240-316 w/ 0.030% max. C		30" CHARGE VESSEL SUPPORT PLATE	4
10					
11	½"	SA-240-316 w/ 0.030% max. C		18" CHARGE VESSEL SUPPORT PLATE	2

CONSTRUCTION NOTES

NOTE 2: WHERE PLATE MATERIAL IS SPECIFIED AS ASME SA240, ASME SA479 MATERIAL MAY BE SUBSTITUTED.

ADD NOTE, BY RPP-WTP

REVISIONS

NO	DESCRIPTION	REV BY	APD BY	DATE
2	REVISED PER ENGINEERING CHANGES	SMT	MDH	06/07/04
1	REVISED PER CUSTOMER COMMENTS	MJV	MDH	09/05/03

NORTHWEST COPPER WORKS, INC.
1503 N. RIVER STREET • PORTLAND, OREGON • 97227

180" I.D. ULTRAFILTER PERMEATE VESSEL INTERNAL SUPPORT

BECHTEL NATIONAL INC.
3000 George Washington Way
Richland, Washington 99352

EQUIP. NO. UFP-VSL-00062A
P.O. NO. 24590-QL-POD-MVAO-00001 REV 0

SCALE AS NOTED	JOB NO. 3005F	DWG. NO. D-3005F	REV 2
DATE 08/06/03	CHKD. BY MDH		
DWN. BY MJV	APPD. BY MJV	SHT. NO. 1 OF 2	

BECHTEL DOC. No. 24590-QL-POD-MVAO-00001-03-40 REV. 005

F:\Swap\ACAD\03\D3005F-2.dwg, 6/7/2004 1:08:01 PM

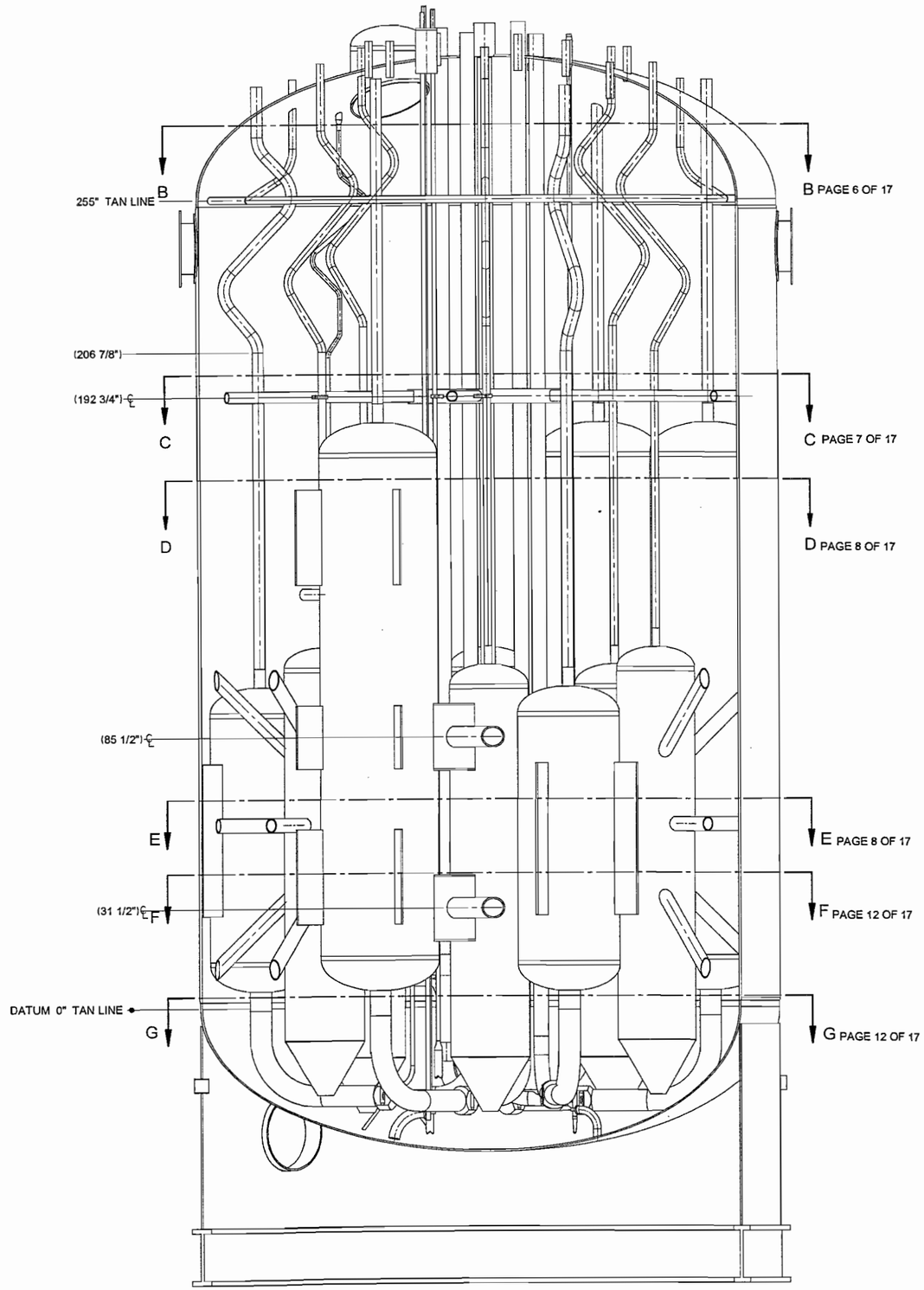

NORTH ELEVATION

BILL OF MATERIALS

MK	THICK/SIZE	MATERIAL	HEAT NO.	DESCRIPTION	QTY
12	3" SCHED 80S	SA 312 TP 316/316L 0.030% MAX C		SMLS PIPE, THERMAL EXPANSION S-BEND	2
13	2" SCHED 80S	SA 312 TP 316/316L 0.030% MAX C		SMLS PIPE, THERMAL EXPANSION S-BEND	6
14	1" SCHED 80S	SA 312 TP 316/316L 0.030% MAX C		SMLS PIPE, THERMAL EXPANSION S-BEND	1
15	4" SCHED 80S	SA 312 TP 316/316L 0.030% MAX C		SMLS PIPE, CENTER SUPPORT	1
16	3" SCHED 80S	SA 312 TP 316/316L 0.030% MAX C		SMLS PIPE, RADIAL SUPPORT	6
		NOT USED			
		NOT USED			
19	3/4"X 6 1/4"	SA 240 TP 316/316L 0.030% MAX C		PLATE, 4" GUIDE RING SUPPORT	2
20	3/4"X 6 1/4"	SA 240 TP 316/316L 0.030% MAX C		PLATE, 4" GUIDE RING SUPPORT	3
21	3/4"X 1"	SA 240 TP 316/316L 0.030% MAX C		PLATE, 4" GUIDE RING	15
22	1/2"X 1"	SA 240 TP 316/316L 0.030% MAX C		PLATE, 2" GUIDE RING	7
23	1"X 3 5/8"	SA 240 TP 316/316L 0.030% MAX C		PLATE, 2" GUIDE RING SUPPORT	3
24	1"X 3 5/8"	SA 240 TP 316/316L 0.030% MAX C		PLATE, 2" GUIDE RING SUPPORT	2
		NOT USED			
26	1"X 3 5/8"	SA 240 TP 316/316L 0.030% MAX C		PLATE, 2" GUIDE RING SUPPORT	1
		NOT USED			
28	1/2"X 2 1/2"	SA 240 TP 316/316L 0.030% MAX C		PLATE, 1" GUIDE RING SUPPORT	1
29	1/2"X 1"	SA 240 TP 316/316L 0.030% MAX C		PLATE, 1" GUIDE RING	13
30	1/2"X 2 1/2"	SA 240 TP 316/316L 0.030% MAX C		PLATE, 1" GUIDE RING SUPPORT	2
31	3" SCHED 80S	SA 240 TP 316/316L 0.030% MAX C		SMLS PIPE	3
32	1/2"	SA 240 TP 316/316L 0.030% MAX C		PLATE, Ø 3 1/2"	3
33	1"X 1"X 2 1/2"	SA 240 TP 316/316L 0.030% MAX C		PLATE	3
34	6" SCHED 80S	SA 312 TP 316/316L 0.030% MAX C		SMLS PIPE, KICKER SUPPORT	4
35	1/2" MIN	SA 240 TP 316/316L 0.030% MAX C		KICKER SUPPORT PLATE	8
36	4" SCHED 80S	SA 312 TP 316/316L 0.030% MAX C		SMLS PIPE, OUTER PJM SUPPORT	6
37	1/2" MIN	SA 240 TP 316/316L 0.030% MAX C		36" CHARGE VESSEL SUPPORT PLATE	4
38	2" SCHED 160S	SA 312 TP 316/316L 0.030% MAX C		SMLS PIPE	1
39	1/2"X 2 3/4"X 2 3/4"	SA 240 TP 316/316L 0.030% MAX C		PLATE	1
40	3" SCHED 160S	SA 312 TP 316/316L 0.030% MAX C		SMLS PIPE	1
41	1/2"X 3 7/8"X 3 7/8"	SA 240 TP 316/316L 0.030% MAX C		PLATE	1
42	6" SCHED 80S	SA 312 TP 316/316L 0.030% MAX C		SMLS PIPE, CENTER PJM SUPPORT	2
43	6" SCHED 80S	SA 312 TP 316/316L 0.030% MAX C		SMLS PIPE, CENTER PJM SUPPORT	4
44	4" SCHED 80S	SA 312 TP 316/316L 0.030% MAX C		SMLS PIPE, CENTER PJM SUPPORT	2
45	4" SCHED 80S	SA 312 TP 316/316L 0.030% MAX C		SMLS PIPE, CENTER PJM SUPPORT	2
46	4" SCHED 80S	SA 312 TP 316/316L 0.030% MAX C		SMLS PIPE, CENTER PJM SUPPORT	4
47	1"X 6 1/4"	SA 240 TP 316/316L 0.030% MAX C		PLATE, 4" GUIDE RING SUPPORT	2
48	1"X 6 1/4"	SA 240 TP 316/316L 0.030% MAX C		PLATE, 4" GUIDE RING SUPPORT	2
49	1"X 6 1/4"	SA 240 TP 316/316L 0.030% MAX C		PLATE, 4" GUIDE RING SUPPORT	4
50	1"X 6 1/4"	SA 240 TP 316/316L 0.030% MAX C		PLATE, 4" GUIDE RING SUPPORT	2
51	1"X 2 1/2"	SA 240 TP 316/316L 0.030% MAX C		PLATE, 1" GUIDE RING SUPPORT	1
52	1"X 2 1/2"	SA 240 TP 316/316L 0.030% MAX C		PLATE, 1" GUIDE RING SUPPORT	2
53	1"X 2 1/2"	SA 240 TP 316/316L 0.030% MAX C		PLATE, 1" GUIDE RING SUPPORT	2
54	1/2" MIN	SA 240 TP 316/316L 0.030% MAX C		KICKER SUPPORT PLATE	4
55	6" SCHED 80S	SA 312 TP 316/316L 0.030% MAX C		SMLS PIPE, KICKER SUPPORT PIPE	2

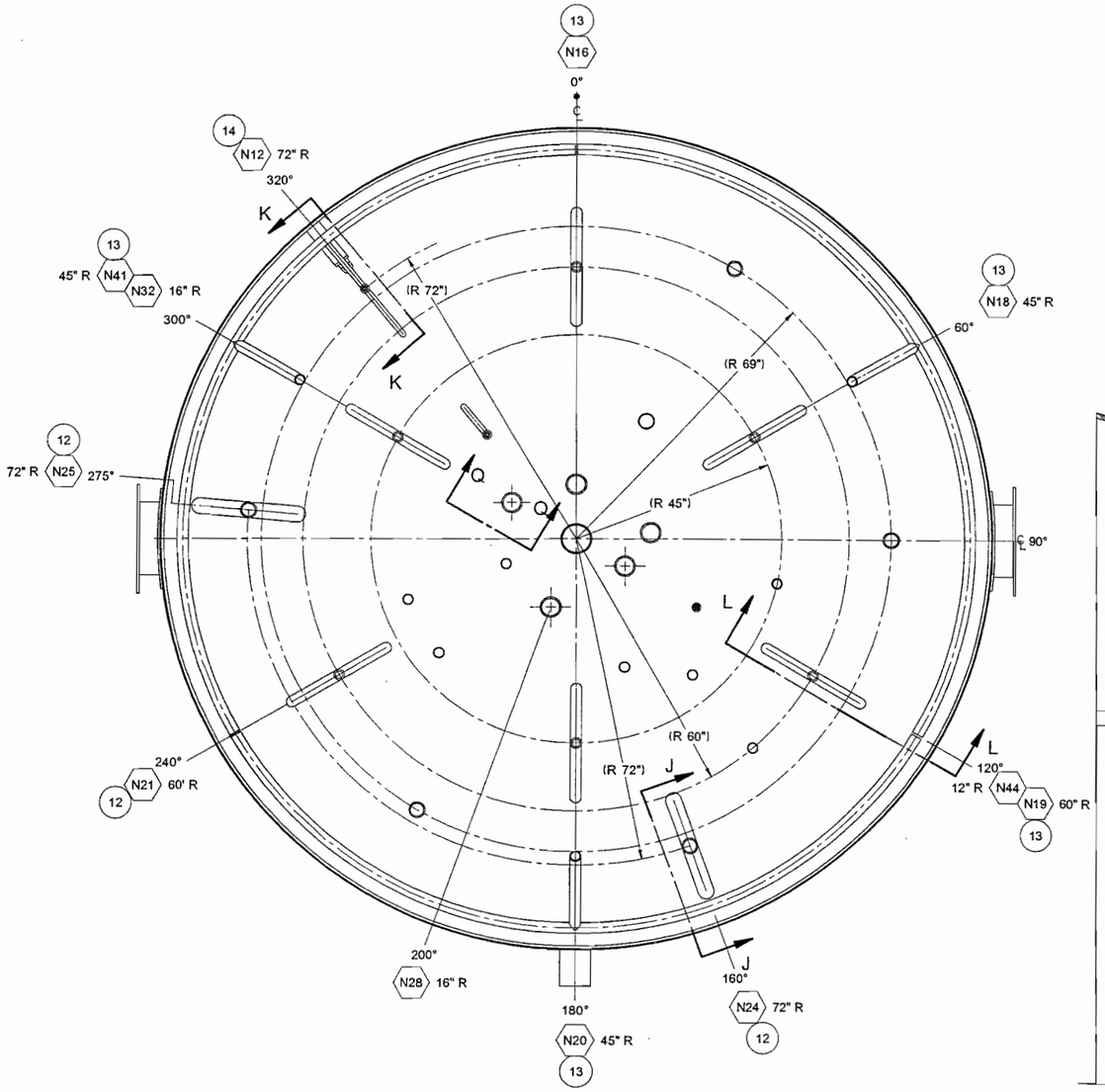

SECTION B-B
SCALE: 1/16

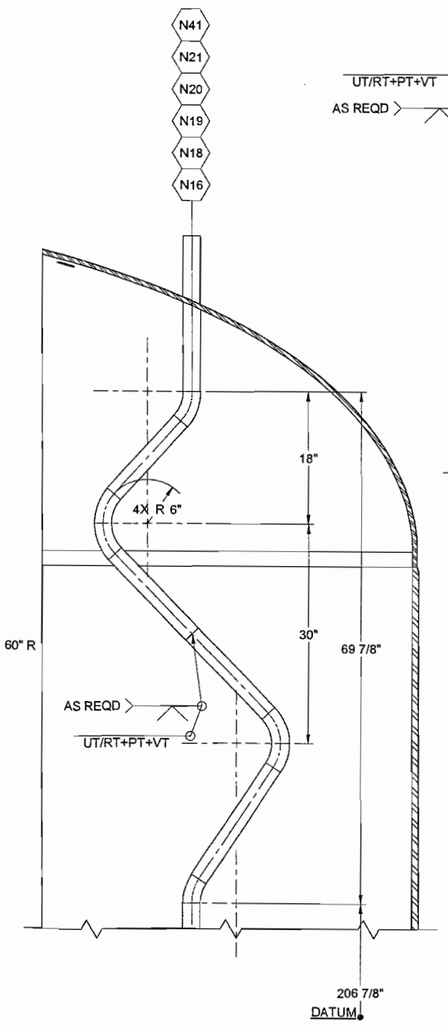

13 SECTION L-L
THERMAL EXPANSION S-BEND
SCALE: 1/10

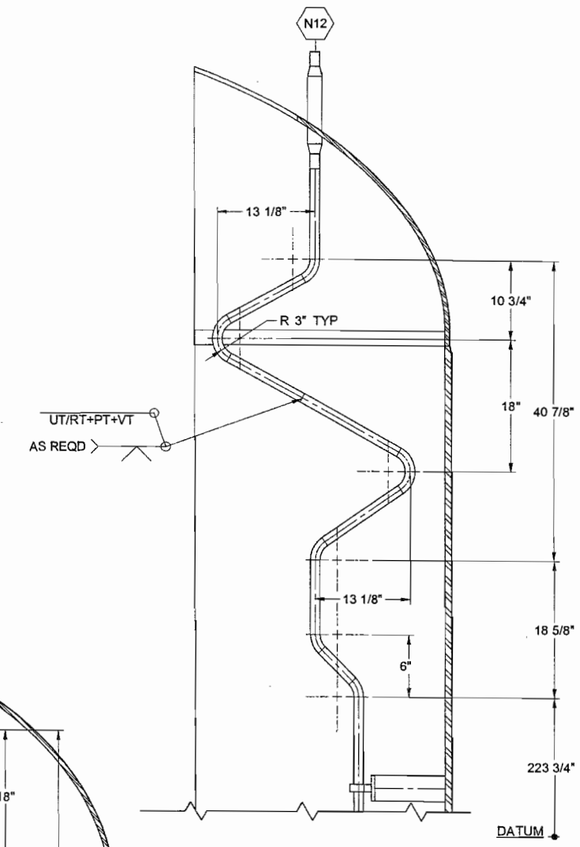

14 SECTION K-K
THERMAL EXPANSION S-BEND
SCALE: 1/10

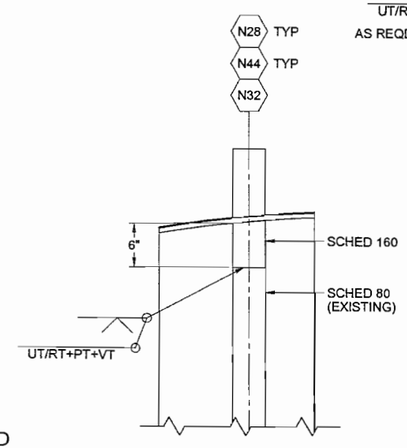

SECTION Q-Q
SCALE: 1/10

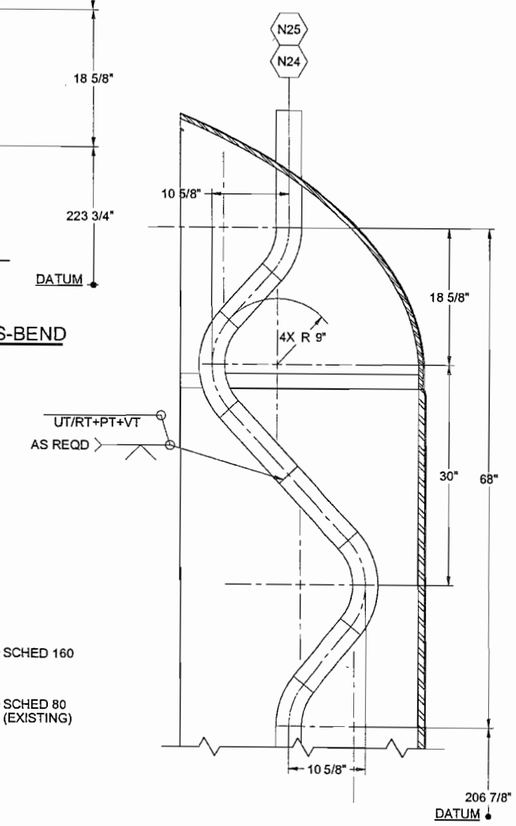

12 SECTION J-J
THERMAL EXPANSION S-BEND
SCALE: 1/10

NOTES:

1. GUIDE RINGS ARE WELDED AFTER CORRECTLY POSITIONING THE GUIDE RING SUPPORTS. GUIDE RINGS SHALL MAINTAIN .125 DIAMETRAL CLEARANCE WITH PIPE.

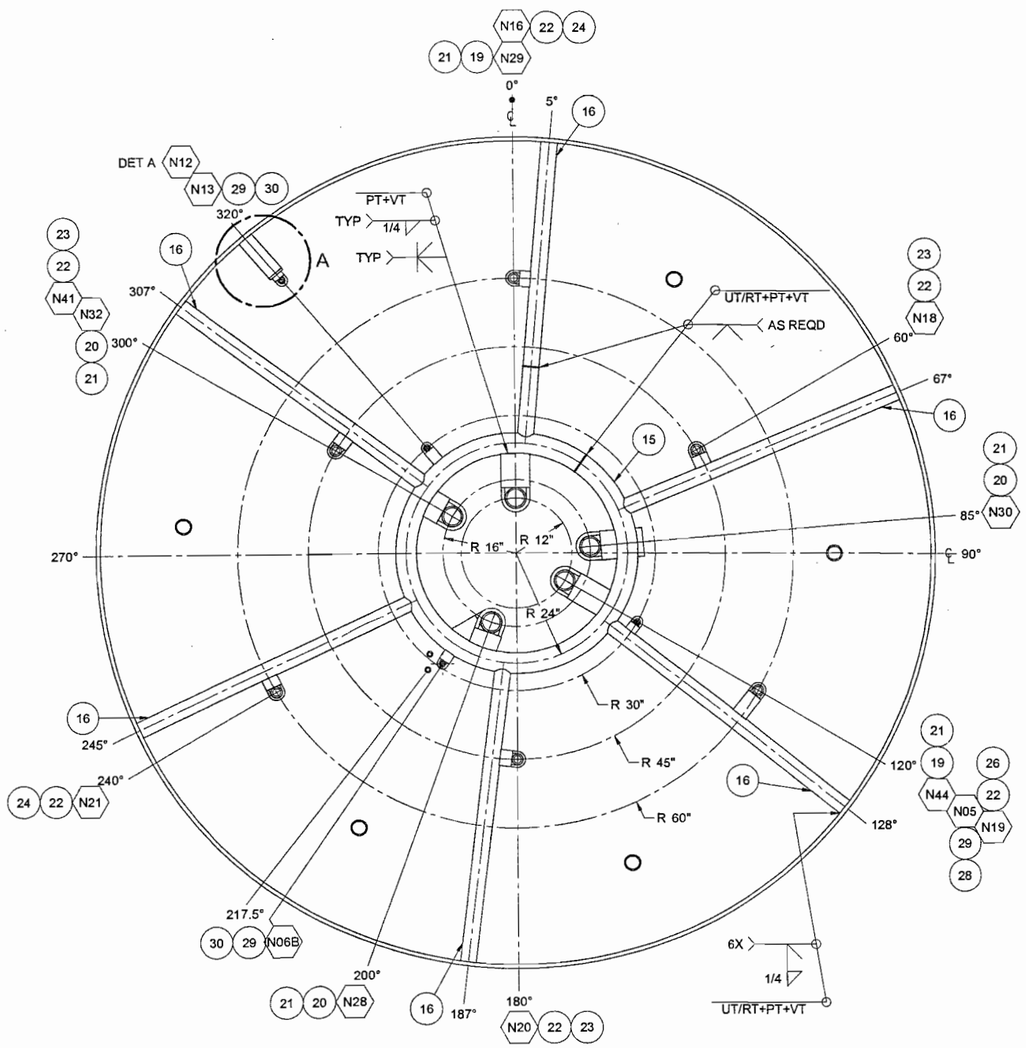

SECTION C-C
SCALE: 1/16

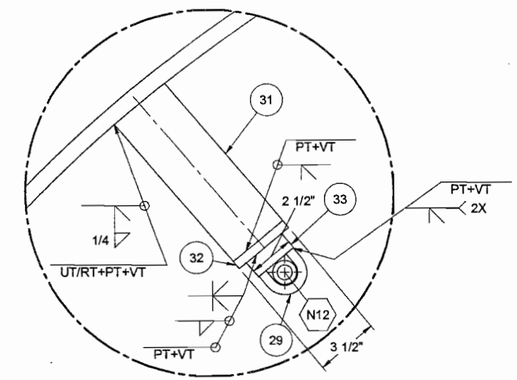

DETAIL-A
SCALE: 1/4

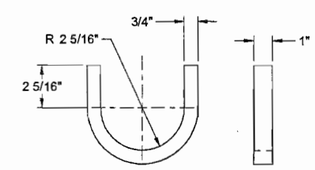

21 GUIDE RING
SCALE: 1/4

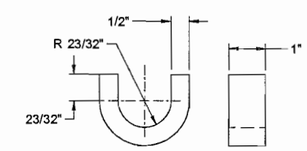

29 GUIDE RING
SCALE: 1/2

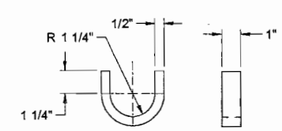

22 GUIDE RING
SCALE: 1/4

24590-PTF-VDCN-MS-10-00007

Attachment 1: Page 7 of 17

FORM D_MASTER 03/2003

SCREENING IS REQUIRED FOR DRAWING TYPES IDENTIFIED IN 24590-WTP-GPP-SREG-002

'D' SIZE - 34x22
COMPUTER GENERATED - MANUAL DESIGN CHANGES NOT PERMITTED

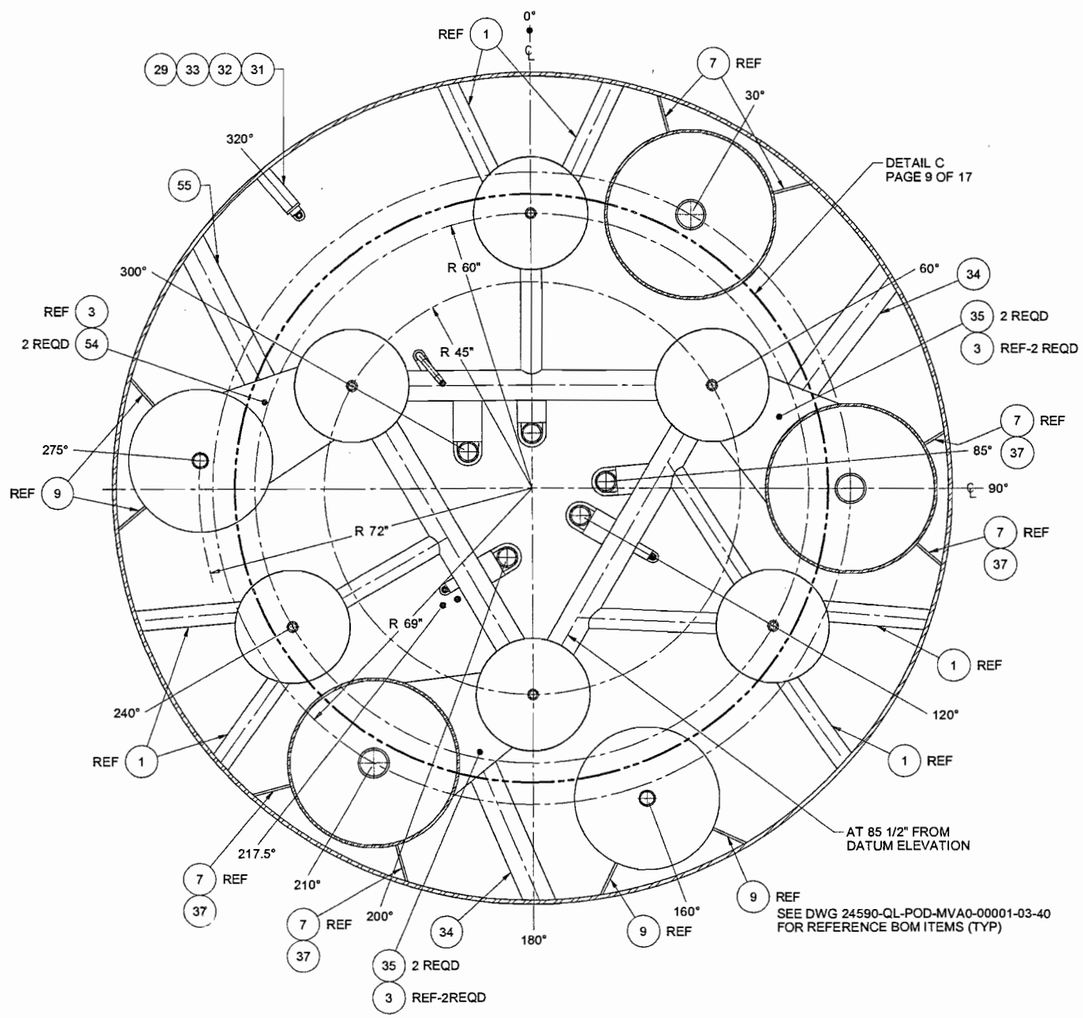

SECTION D-D
SCALE: 1/16

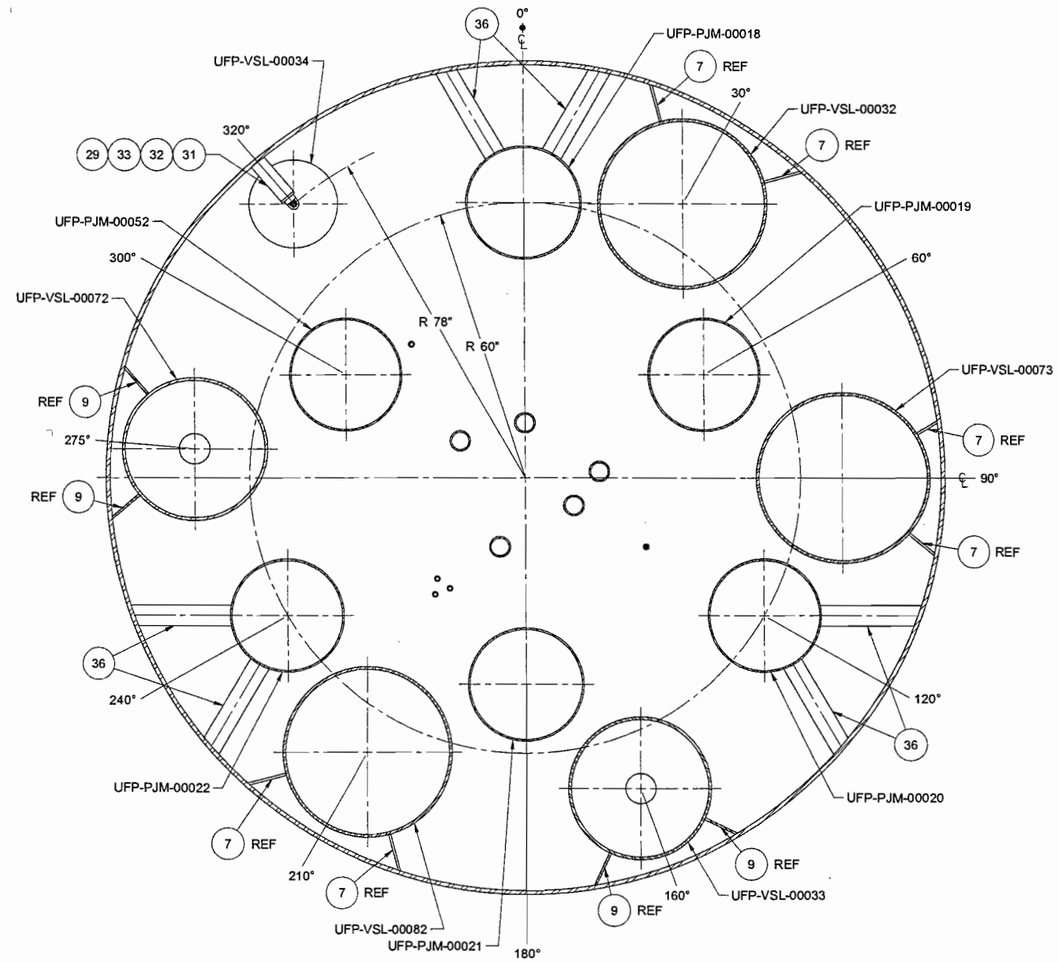

SECTION E-E
SCALE: 1/16

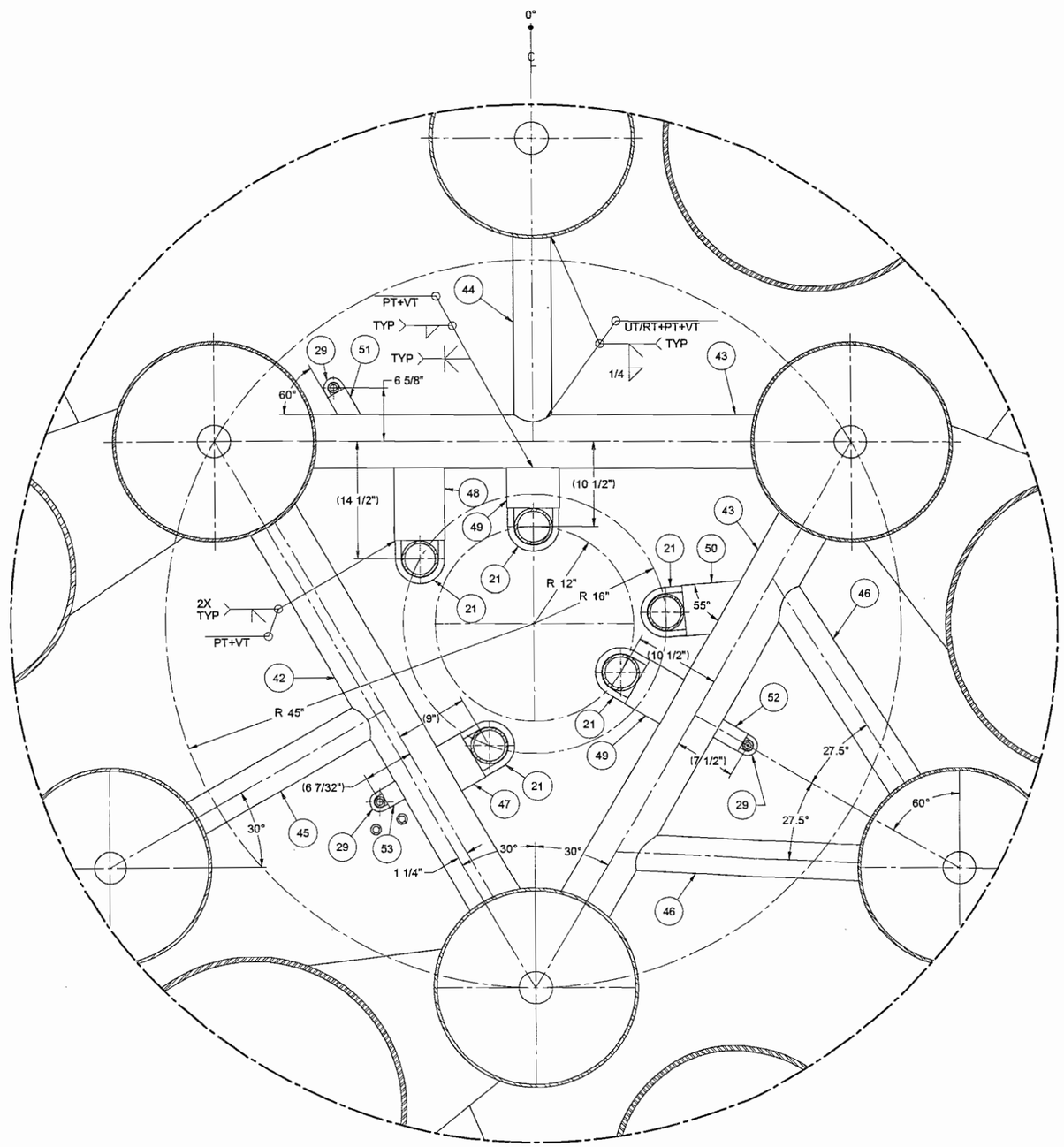

DETAIL C
SCALE: 1/8

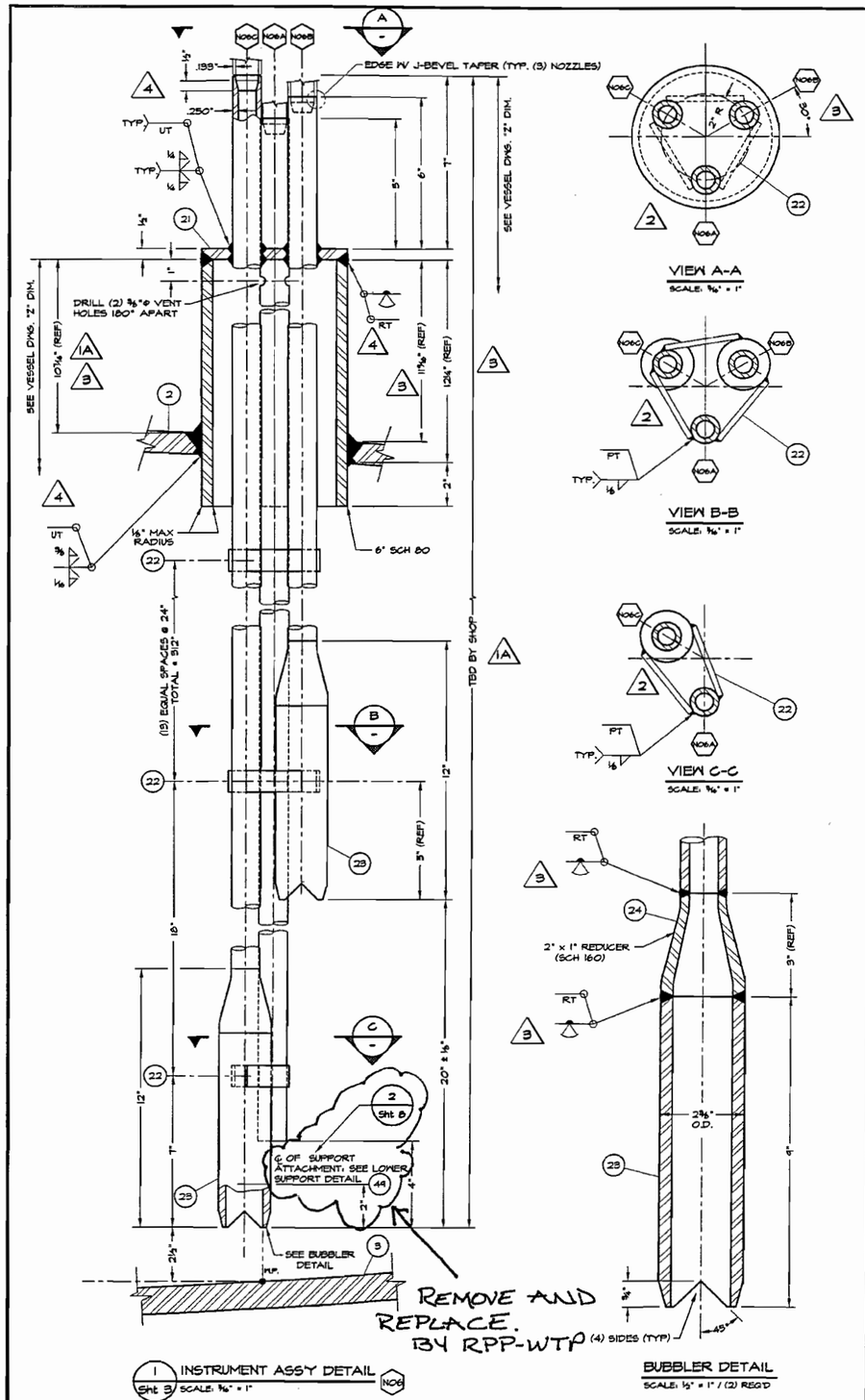

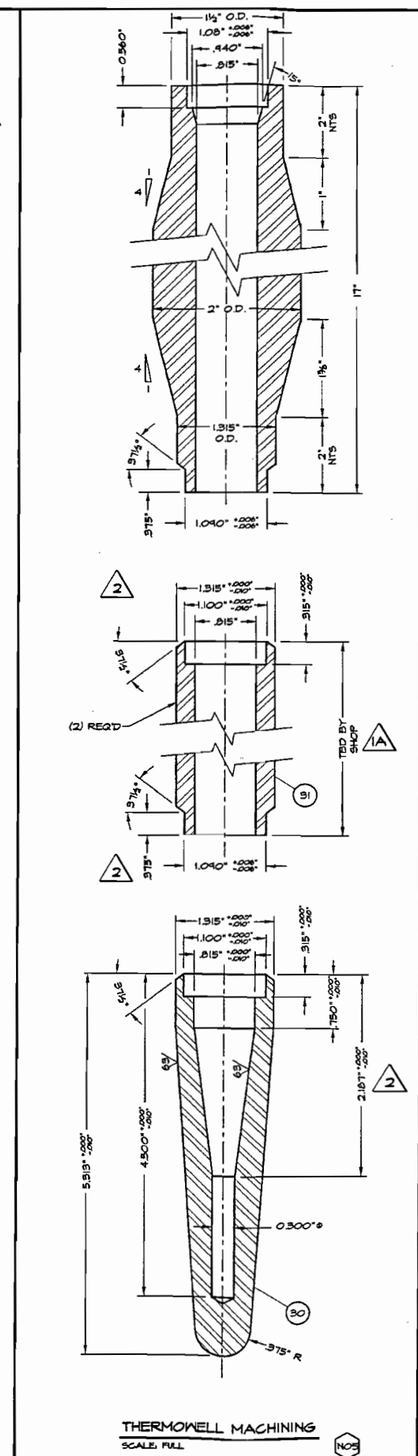

1. ENTIRE OUTER SURFACE TO BE DYE PENETRANT TESTED
2. THE BORE OF THE THERMOWELL POCKET SHALL BE FREE FROM ANY INTERNAL DEBRIS AFTER WELDING TO THE DIP PIPE. THE TOP OF THE DIP PIPE SHALL BE CAPPED OFF ASS SOON AS POSSIBLE AFTER WELDING TO PREVENT INGRESS OF DEBRIS.
3. WELDS INSIDE VESSEL TO PASS HELIUM LEAK TESTING.
* REAM ID TO CORRECT DIAMETER AFTER WELDING TO HEAD.

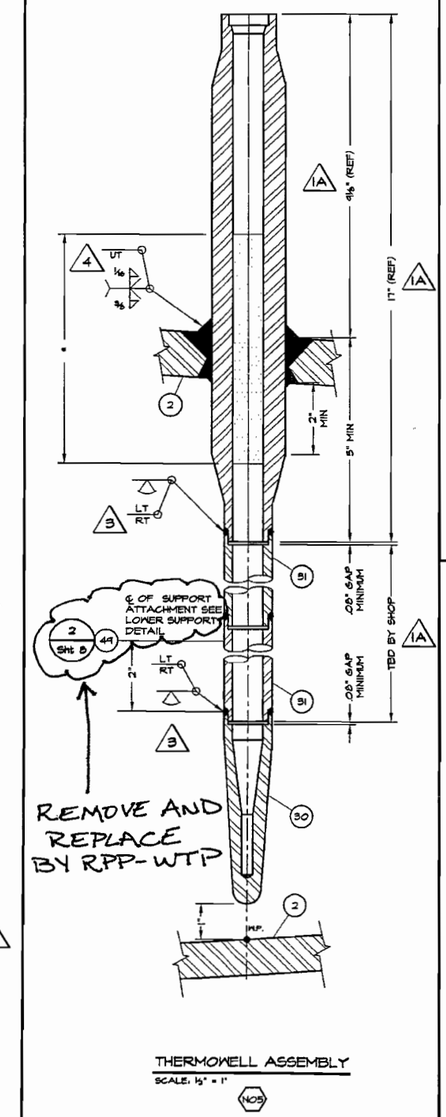

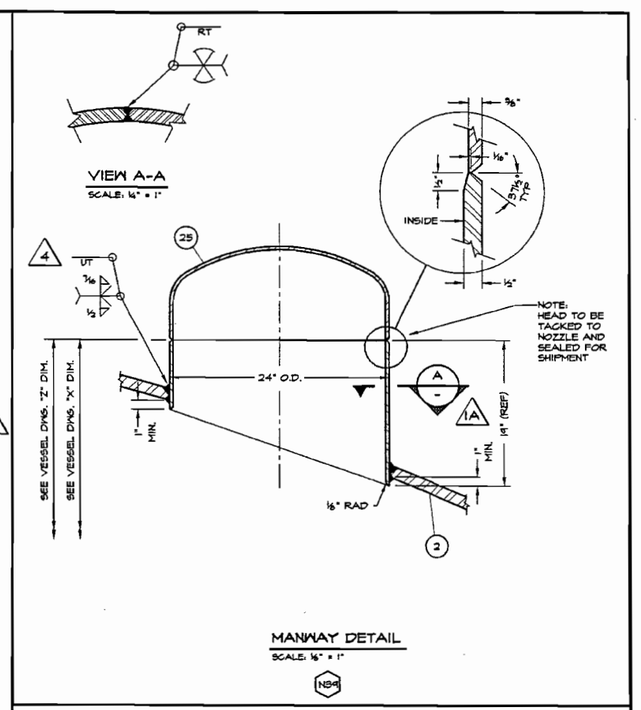

Some information on page this may appear to be illegible, however, the information necessary is legible.

24590-PTF-MV-UFP-VSL-00062 A
Job No. 24590
Bechtel National, Inc.
SUPPLIER DOCUMENT STATUS
1. [X] Work may proceed.
2. [ ] Revise and resubmit. Work may proceed subject to resolution of indicated comments.
3. [ ] Revise and resubmit. Work may not proceed.
4. [ ] Review not required. Work may proceed.
Permission to proceed does not constitute acceptance or approval of design details, calculations, analyses, test methods, or materials developed or selected by the supplier and does not relieve supplier from full compliance with contractual obligations.
REVIEWED M / H K
G-321 Document Category 1.3
(From Supplement A to G-321-E (B) or G-321-V (V), as applicable, or "N/A" if SSRS is used)
Supersedes BNI Document No. ____ Rev. ____
(When applicable)
Accepted by H. KHURANA (Print Name) (Signature) 01/13/05 (Date)
Released by ____ (When applicable) (Print Name) (Signature) (Date)
R10443775

REVISIONS

NO	DESCRIPTION	REV BY	APD BY	DATE
5	NO CHANGES	SMT	MJV	12/06/04
4	REVISED PER CUSTOMER COMMENTS AND ENGINEERING CHANGES	SMT	MJV	11/05/04
3	REVISED PER CUSTOMER COMMENTS AND ENGINEERING CHANGES	SMT	MJV	06/07/04
2	REVISED PER CUSTOMER COMMENTS AND ENGINEERING CHANGES	MDH	MJV	04/03/03
1A	REVISED PER CUSTOMER COMMENTS AND ENGINEERING CHANGES	MDH	MJV	07/18/03
1	DRAWING ADDED	MJV	MDH	04/28/03

NORTHWEST COPPER WORKS, INC.
1303 N. RIVER STREET • PORTLAND, OREGON • 97227

180" I.D. ULTRAFILTER PERMEATE COLLECTION VESSEL NOZZLE DETAILS (1 OF 3)

BECHTEL NATIONAL INC.
3000 George Washington Way
Richland, Washington 99352

EQUIP. NO. UFP-VSL-00062A			
P.O. NO. 24590-QL-POD-MVAO-00001 REV 0			
SCALE AS NOTED	JOB NO. 3005	DWG. NO. D-3005	REV 5
DATE 04/28/03	CHKD. BY MJV		
DWN. BY MDH	APPD. BY MDH	SHT. NO. 6 OF 8	

~~REF. DWG 24590-PTF-MV-UFP-00005 REV 0~~ 12/01/04
BECHTEL DOC. 24590-QL-POD-MVAO-00001-03-22 REV. 00 E
DELETED BY RPP-WTP

P:\Swap\ACAD\03\D3005-5 PRELIM Mon Dec 06 09:41:05 2004

Some information on page this may appear to be illegible, however, the information necessary is legible.

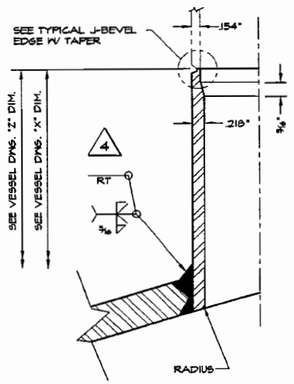

2" SCH 80 FLUSH NOZZLE
SCALE: 3/4" = 1"
N46 2

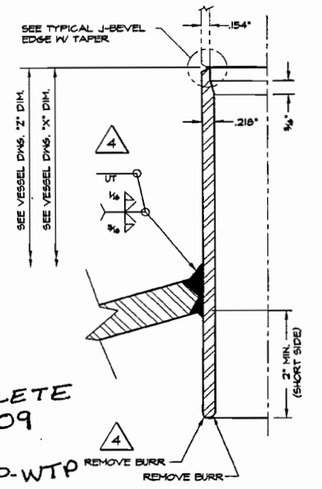

DELETE N09 BY RPP-WTP

2" SCH 80 NOZZLE W/ INT. PROJECTION
SCALE: 3/4" = 1"
NOT ~~N09~~ N10 N11 N14 2 3

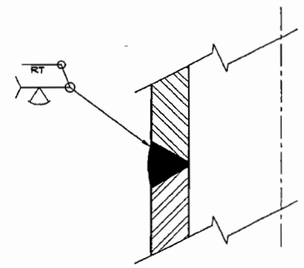

TYPICAL CIRCULAR WELD ON DIP TUBE
NO SCALE

DELETE AND REPLACE WITH TYPICAL SCH 160 NOZZLE DETAIL

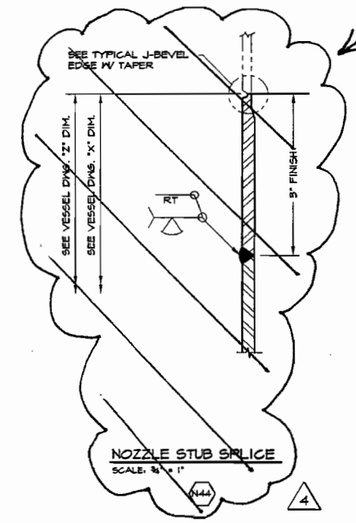

NOZZLE STUB SPLICE
SCALE: 3/4" = 1"
N44 4

24590-MP-NW-UFP-VSL-00062A
Job No. 24590
Bechtel National, Inc.
SUPPLIER DOCUMENT STATUS
1. [X] Work may proceed.
2. [ ] Revise and resubmit. Work may proceed subject to resolution of indicated comments.
3. [ ] Revise and resubmit. Work may not proceed.
4. [ ] Review not required. Work may proceed.
Permission to proceed does not constitute acceptance or approval of design details, calculations, analyses, test methods, or materials developed or selected by the supplier and does not relieve supplier from full compliance with contractual obligations.
REVIEWED M RK
G-321 Document Category L3
[From Supplement A to G-321-E (E) or G-321-V (V), as applicable, or "N/A" if SSRS is used]
Supersedes BNI Document No. _____ Rev. _____
[When applicable]
Accepted by H. KHUKHAR (Print Name) (Signature) 01/13/05 (Date)
Released by [When applicable] (Print Name) (Signature) (Date)
01-OP-017-10

REMOVE AND REPLACE BY RPP-WTP

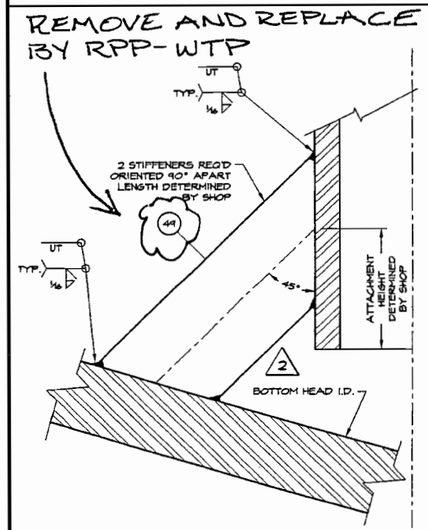

2 TYP. LOWER SUPPORT FOR DIP TUBES
NO SCALE

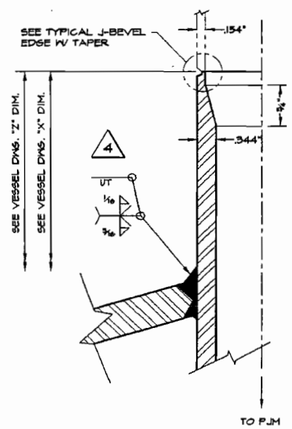

2" SCH 160 INLET TO INTERNALS
SCALE: 3/4" = 1"
N16 N18 N19 N20 N21 N41

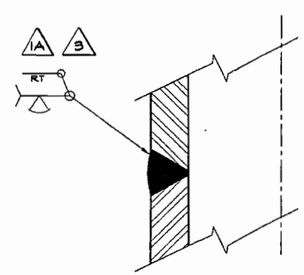

TYP. CIRC. WELD ON INLET TO INTERNALS
NO SCALE

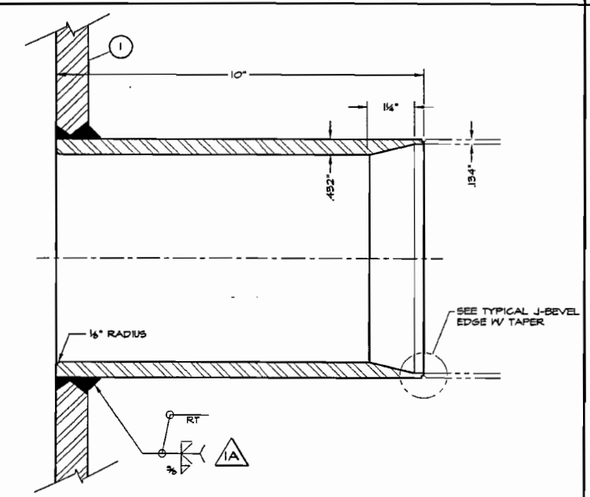

6" SCH 80 OVERFLOW NOZZLE THRU SHELL
SCALE: 1/2" = 1"
N37

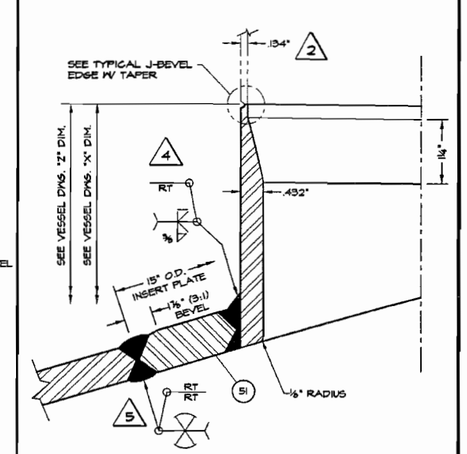

6" SCH 80 FLUSH NOZZLE
SCALE: 3/4" = 1"
N22

R10443777

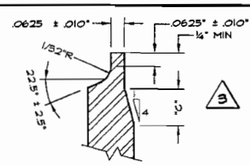

TYPICAL J-BEVEL EDGE W/ TAPER
SCALE: NONE

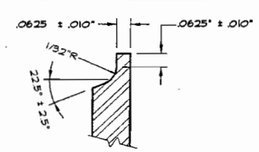

TYPICAL J-BEVEL EDGE W/O TAPER
SCALE: NONE

REVISIONS

NO	DESCRIPTION	REV BY	APD BY	DATE
5	UPDATED NOZZLE N22 RADIOGRAPHY REQUIREMENTS	SMT	MJV	12/06/04
4	REVISED PER CUSTOMER COMMENTS AND ENGINEERING CHANGES	SMT	MJV	11/05/04
3	REVISED PER CUSTOMER COMMENTS AND ENGINEERING CHANGES	SMT	MJV	06/01/04
2	REVISED PER CUSTOMER COMMENTS AND ENGINEERING CHANGES	MDH	MJV	04/03/03
1A	REVISED PER CUSTOMER COMMENTS AND ENGINEERING CHANGES	MDH	MJV	07/18/03
1	DRAWING ADDED	MJV	MDH	04/28/03

NORTHWEST COPPER WORKS INC

NORTHWEST COPPER WORKS, INC.
1303 N. RIVER STREET • PORTLAND, OREGON • 97227

180" I.D. ULTRAFILTER PERMEATE COLLECTION VESSEL NOZZLE DETAILS (3 of 3)

BECHTEL NATIONAL INC.
3000 George Washington Way
Richland, Washington 99352

EQUIP. NO. UFP-VSL-00062A
P.O. NO. 24590-QL-POD-MVAO-00001 REV 0

SCALE AS NOTED	JOB NO. 3005	DWG. NO. D-3005	REV 5
DATE 04/28/03	CHKD. BY MJV		
DWN. BY MDH	APPD. BY MDH	SHT. NO. 8 OF 8	

~~REF. DWG 24590-PTF-MV-UFP-00005 REV 5~~ 12/09/14
BECHTEL DOC. 24590-QL-POD-MVAO-00001-03-24 REV. 00016

DELETED BY RPP-WTP

I:\Swap\ACAD\D3\D3005-5 PRELIM Mon Dec 06 09:40:42 2004

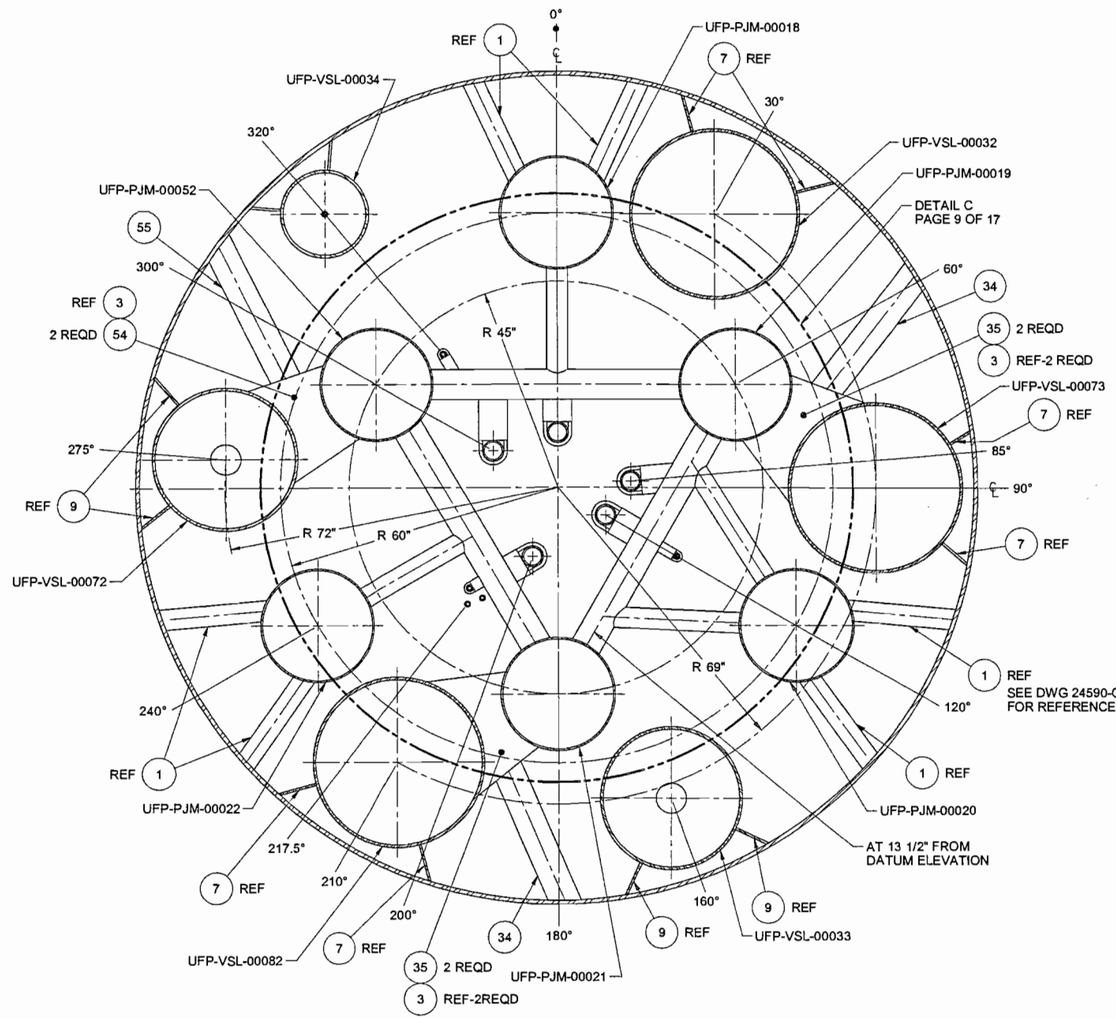

SECTION F-F
SCALE: 1/16

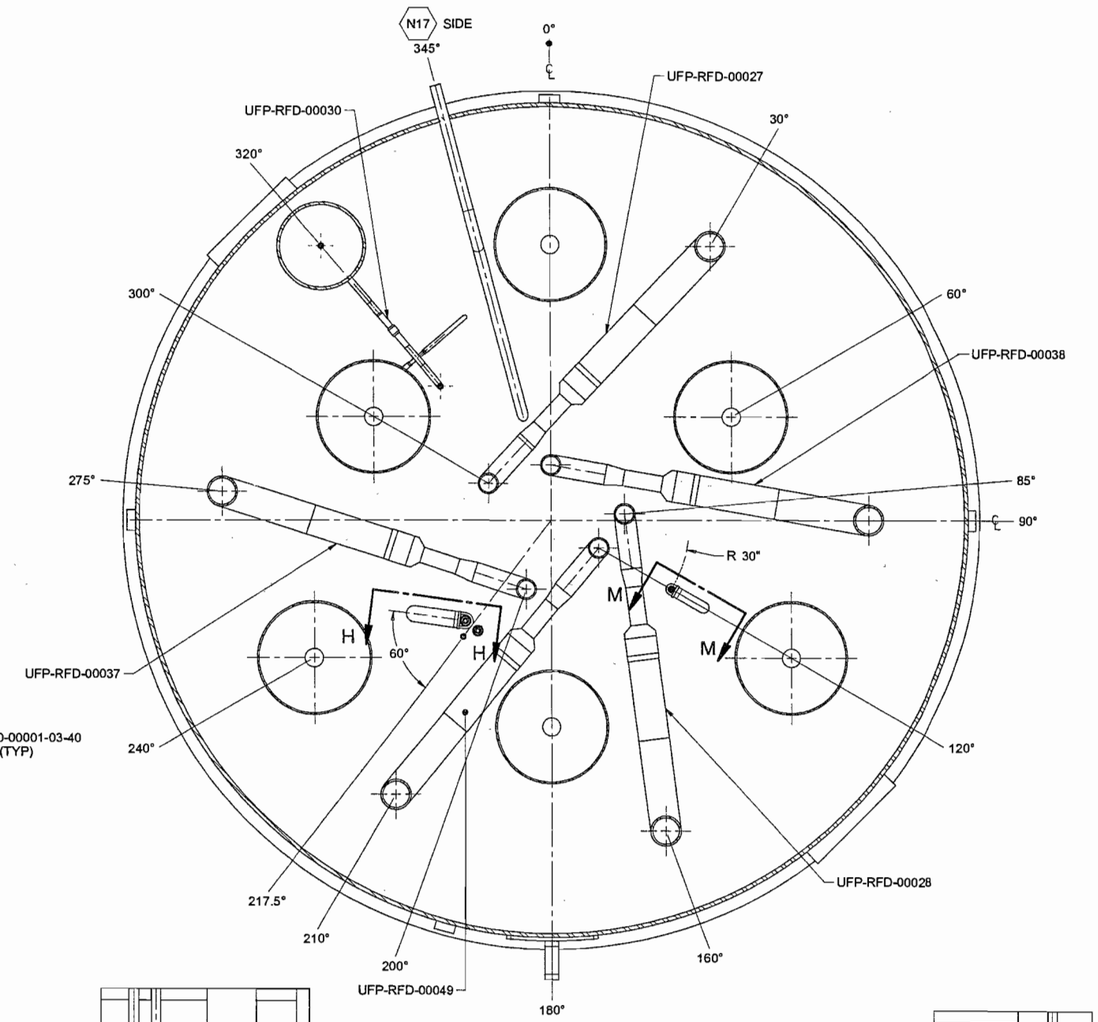

SECTION G-G
SCALE: 1/16

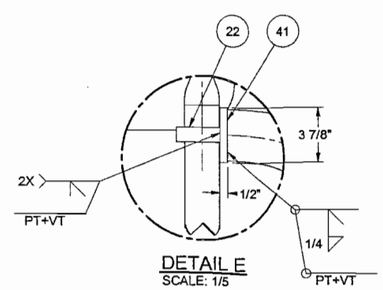

DETAIL E
SCALE: 1/5

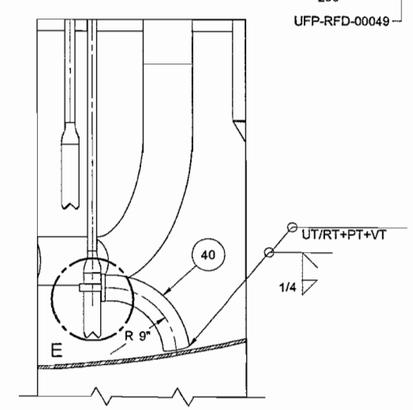

SECTION H-H
SCALE: 1/10

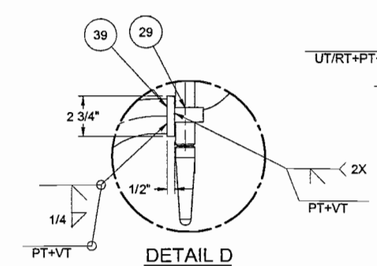

DETAIL D
SCALE: 1/5

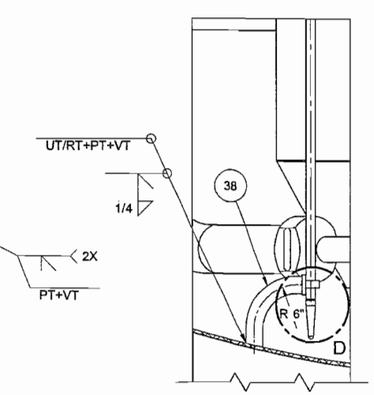

SECTION M-M
SCALE: 1/10

DELETE & REPLACE BY RPP-WTP

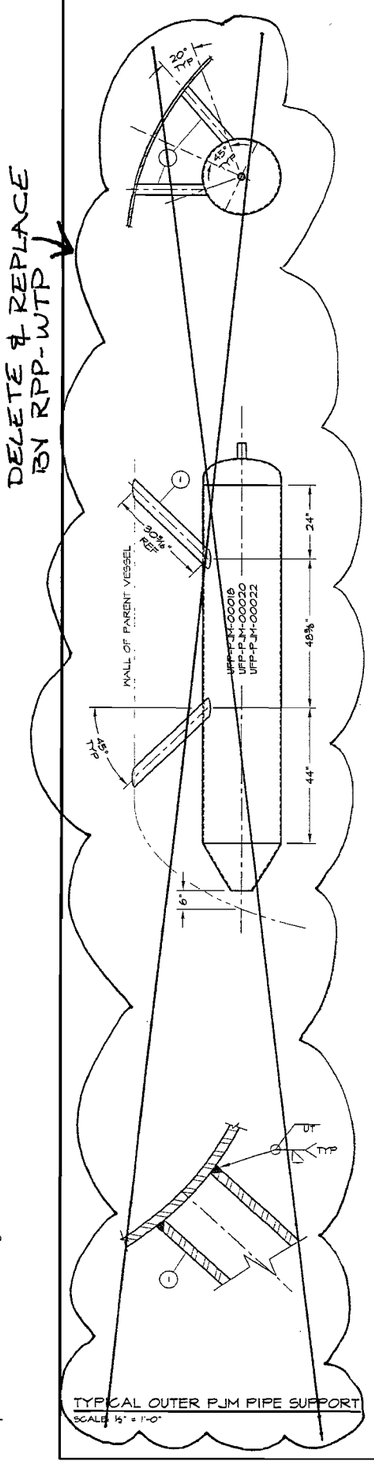

TYPICAL OUTER PJM PIPE SUPPORT
SCALE: ½" = 1'-0"

DELETE & REPLACE BY RPP-WTP

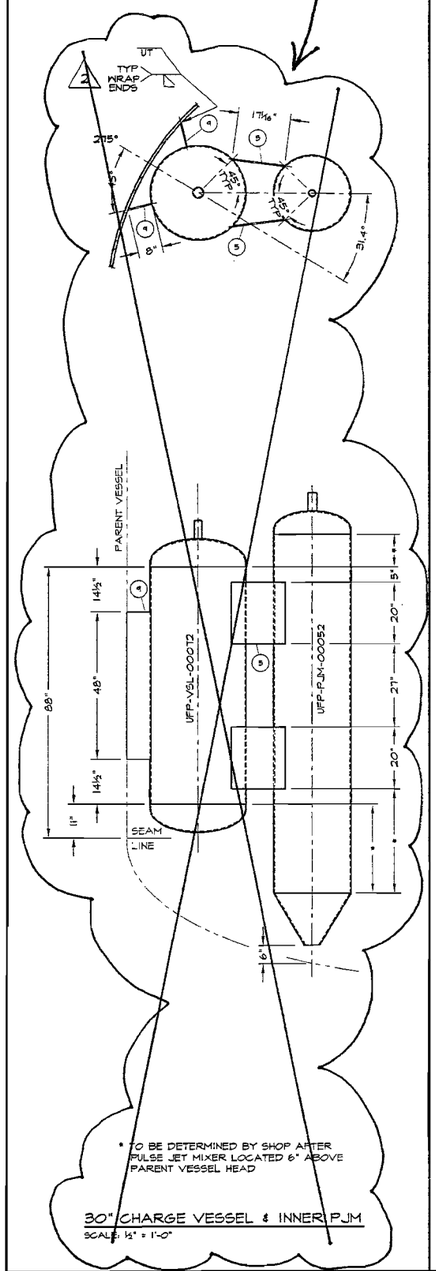

* TO BE DETERMINED BY SHOP AFTER PULSE JET MIXER LOCATED 6" ABOVE PARENT VESSEL HEAD

30" CHARGE VESSEL & INNER PJM
SCALE: ½" = 1'-0"

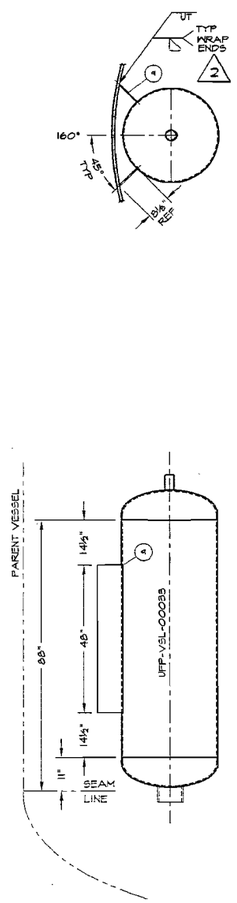

30" CHARGE VESSEL
SCALE: ½" = 1'-0"

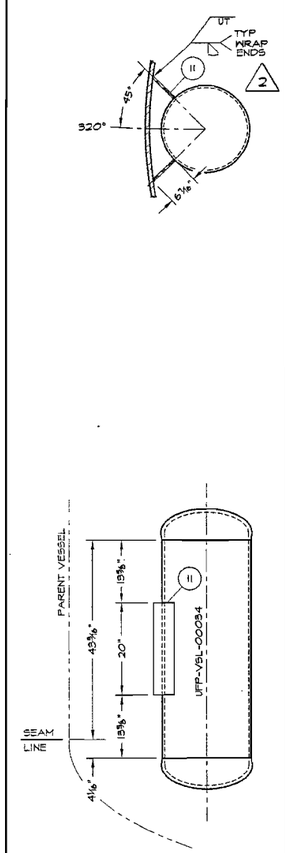

18" CHARGE VESSEL
SCALE: ¾" = 1'-0"

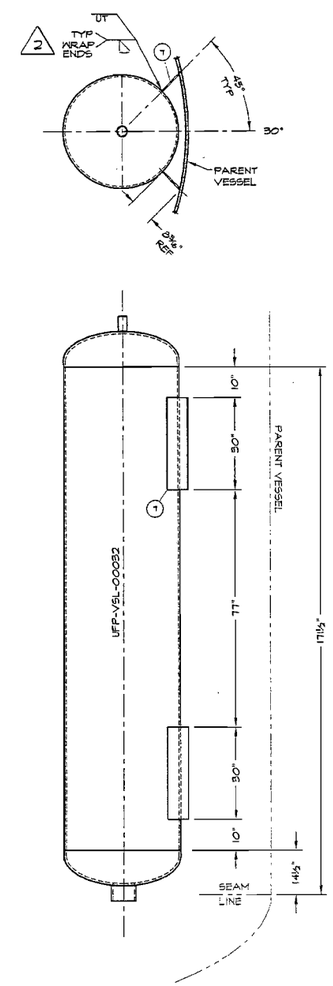

36" CHARGE VESSEL
SCALE: ½" = 1'-0"

DELETE & REPLACE BY RPP-WTP

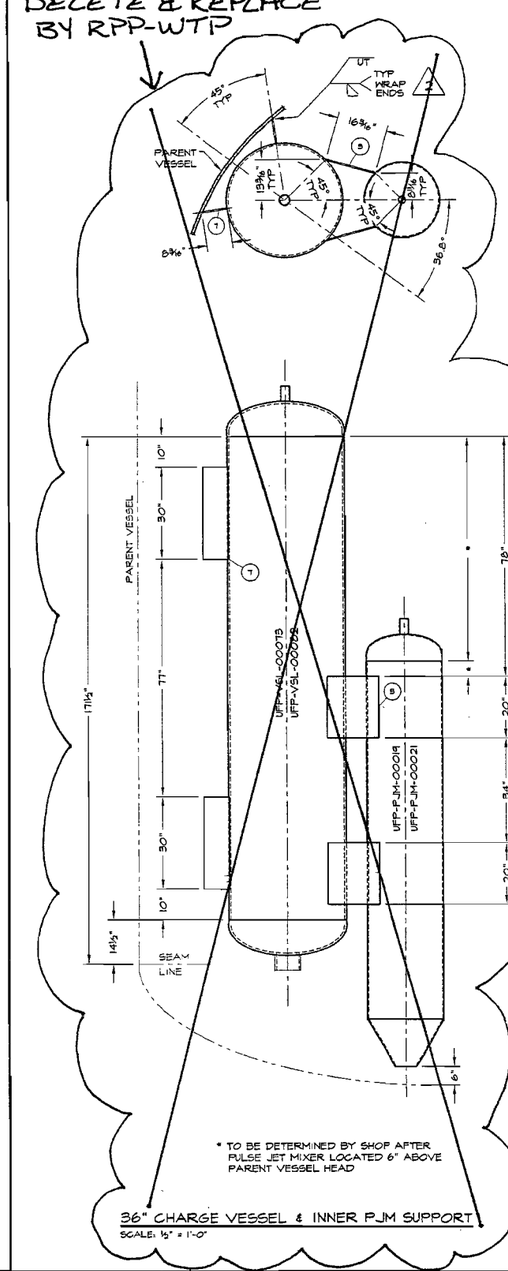

* TO BE DETERMINED BY SHOP AFTER PULSE JET MIXER LOCATED 6" ABOVE PARENT VESSEL HEAD

36" CHARGE VESSEL & INNER PJM SUPPORT
SCALE: ½" = 1'-0"

REVISIONS

NO	DESCRIPTION	REV BY	APD BY	DATE
2	REVISED PER ENGINEERING CHANGES	SMT	MDH	06/07/04
1	REVISED PER CUSTOMER COMMENTS	MJV	MDH	04/05/03

NORTHWEST COPPER WORKS, INC.
1303 N. RIVER STREET • PORTLAND, OREGON • 97227

180" I.D. ULTRAFILTER PERMEATE VESSEL INTERNAL SUPPORT

BECHTEL NATIONAL INC.
3000 George Washington Way
Richland, Washington 99352

EQUIP. NO. UFP-VSL-00062A
P.O. NO. 24590-QL-POD-MVAO-00001 REV 0

SCALE AS NOTED	JOB NO. 3005F	DWG. NO. D-3005F	REV 2
DATE 08/06/03	CHKD. BY MDH		
DWN. BY MDH	APPD. BY MJV	SHT. NO. 2 OF 2	

R1033752

BECHTEL DOC. No. 24590-QL-POD-MVAO-00001-03-41 REV. 00B

P:\Swap\ACAD\03\D3005F-2.dwg, 7/6/2004 9:56:20 AM

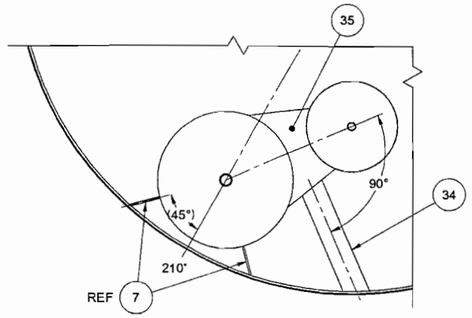

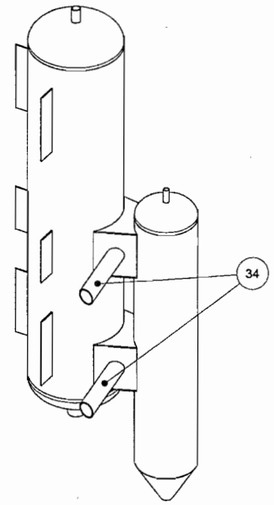

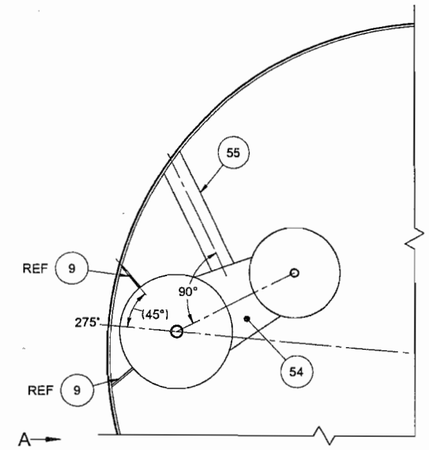

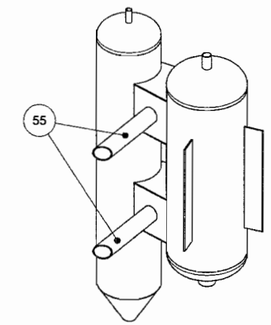

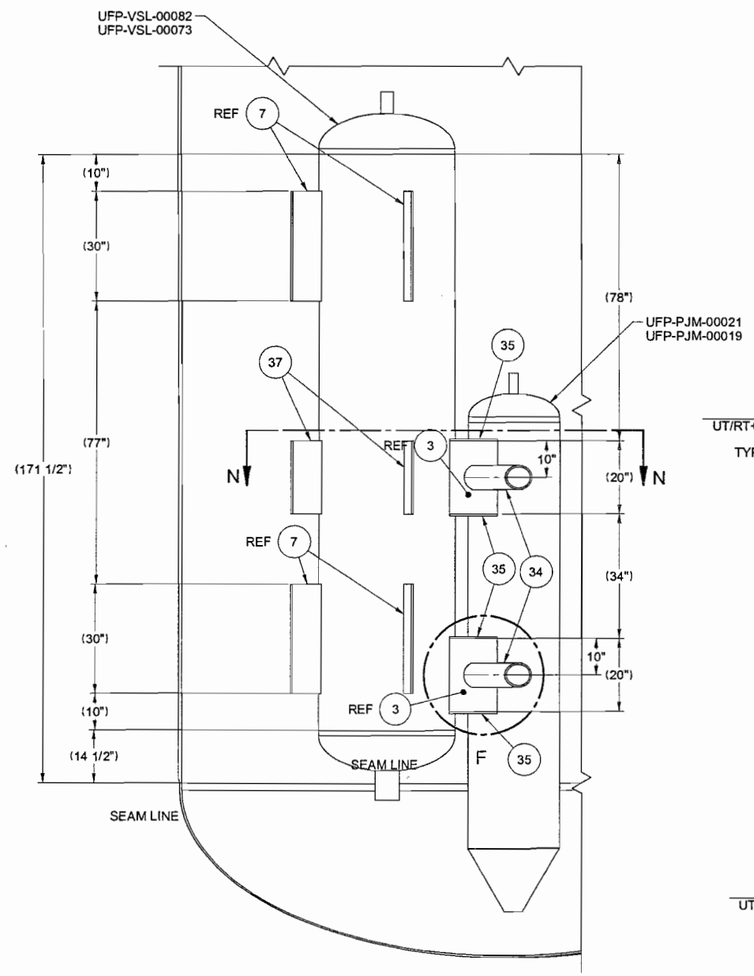

36" CHARGE VESSEL & INNER PJM SUPPORT
SCALE: 1/20
SEE DWG 24590-QL-POD-MVAO-00001-03-40
FOR REFERENCE BOM ITEMS

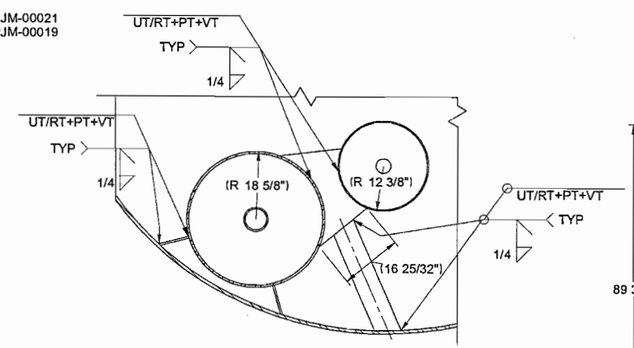

SECTION N-N
SCALE: 1/20

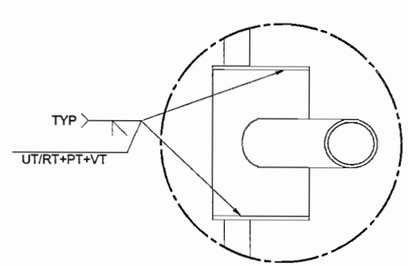

35 DETAIL F
SCALE: 1/10

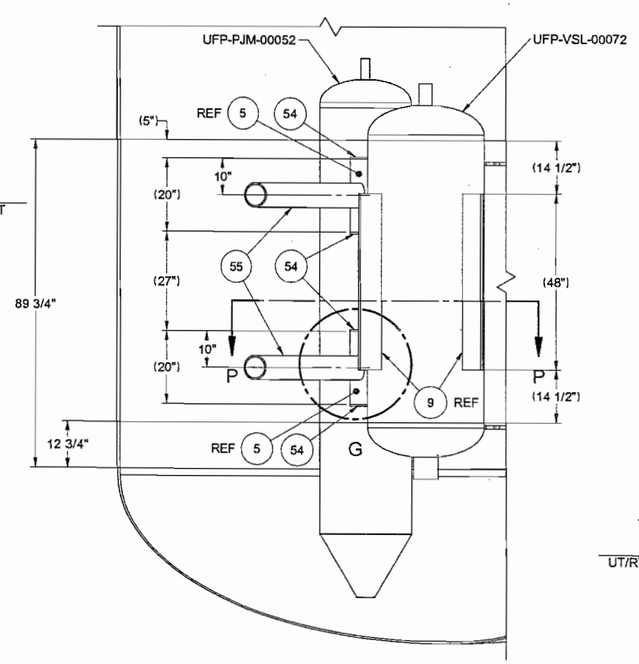

VIEW-A
30" CHARGE VESSEL & INNER PJM SUPPORT
SCALE: 1/20
SEE DWG 24590-QL-POD-MVAO-00001-03-40
FOR REFERENCE BOM ITEMS

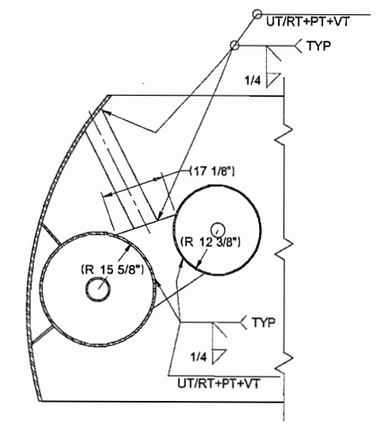

SECTION P-P
SCALE: 1/20

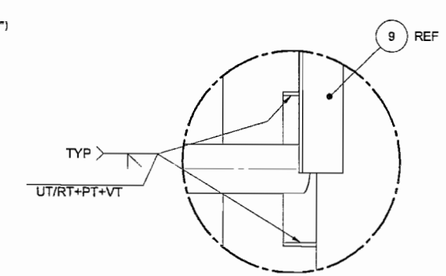

54 DETAIL G
SCALE: 1/10

Some information on page HIS may appear to be illegible, however, the information necessary is legible.

P:\Swap\ACAD\03\D3005-7 PRELIM.dwg, 6/20/2005 4:11:47 PM

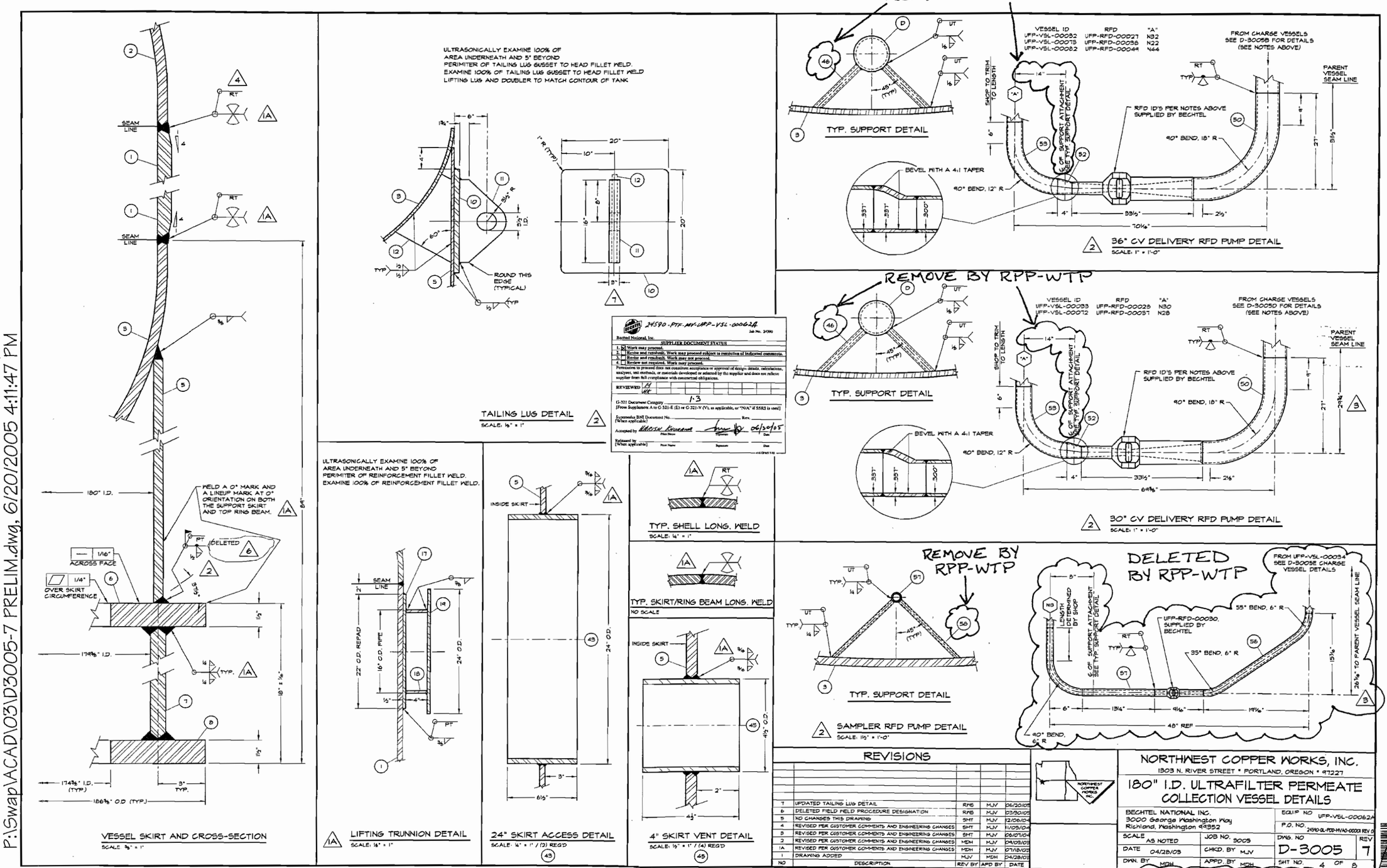

REVISIONS

NO	DESCRIPTION	REV BY	APD BY	DATE
7	UPDATED TAILING LUG DETAIL	RMS	MJV	06/20/05
6	DELETED FIELD WELD PROCEDURE DESIGNATION	RMS	MJV	03/30/05
5	NO CHANGES THIS DRAWING	SMT	MJV	12/06/04
4	REVISED PER CUSTOMER COMMENTS AND ENGINEERING CHANGES	SMT	MJV	11/05/04
3	REVISED PER CUSTOMER COMMENTS AND ENGINEERING CHANGES	SMT	MJV	06/07/04
2	REVISED PER CUSTOMER COMMENTS AND ENGINEERING CHANGES	MDH	MJV	04/05/03
1A	REVISED PER CUSTOMER COMMENTS AND ENGINEERING CHANGES	MDH	MJV	07/18/03
1	DRAWING ADDED	MJV	MDH	04/28/03

NORTHWEST COPPER WORKS, INC.
1503 N. RIVER STREET • PORTLAND, OREGON • 97227

180" I.D. ULTRAFILTER PERMEATE COLLECTION VESSEL DETAILS

BECHTEL NATIONAL INC.
3000 George Washington Way
Richland, Washington 99352

EQUIP NO	UFP-VSL-00062A		
P.O. NO	24590-QL-POD-MVAO-00003 REV 0		
SCALE AS NOTED	JOB NO. 3005	DWG. NO D-3005	REV 7
DATE 04/28/03	CHKD. BY MJV		
DWN. BY MDH	APPD. BY MDH	SHT NO. 4 OF 8	

REF. DWG. 24590-PTF-MV-UFP-00005 REV. 0
BECHTEL DOC. 24590-QL-POD-MVAO-00001-03-20 REV. 00
DELETED BY RPP-WTP

BILL OF MATERIALS					
MK	THICK/SIZE	MATERIAL	HEAT NO.	DESCRIPTION	QTY
59	1" Ø	SA 479 TYPE 316		BAR	2
60	1" SCHED 160S	SA 312 TP 316/316L 0.030% MAX C		SMLS PIPE, OFFSET	1

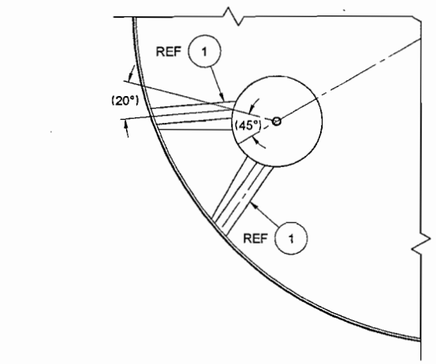

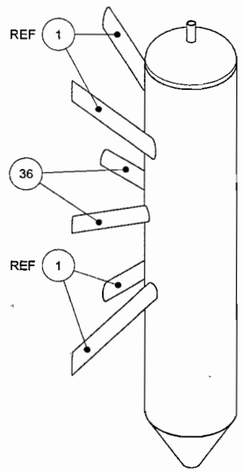

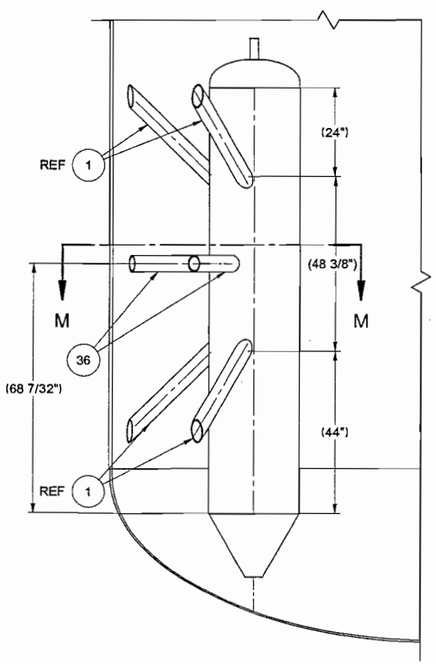

TYPICAL OUTER PJM SUPPORT
SCALE: 1/20
SEE DWG 24590-QL-POD-MVA0-00001-03-40
FOR REFERENCE BOM ITEMS (TYP)

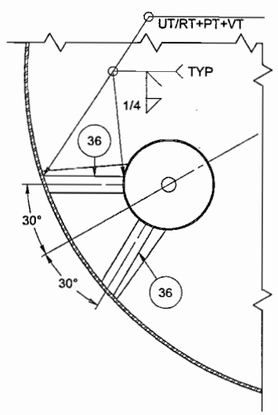

SECTION M-M
SCALE: 1/20

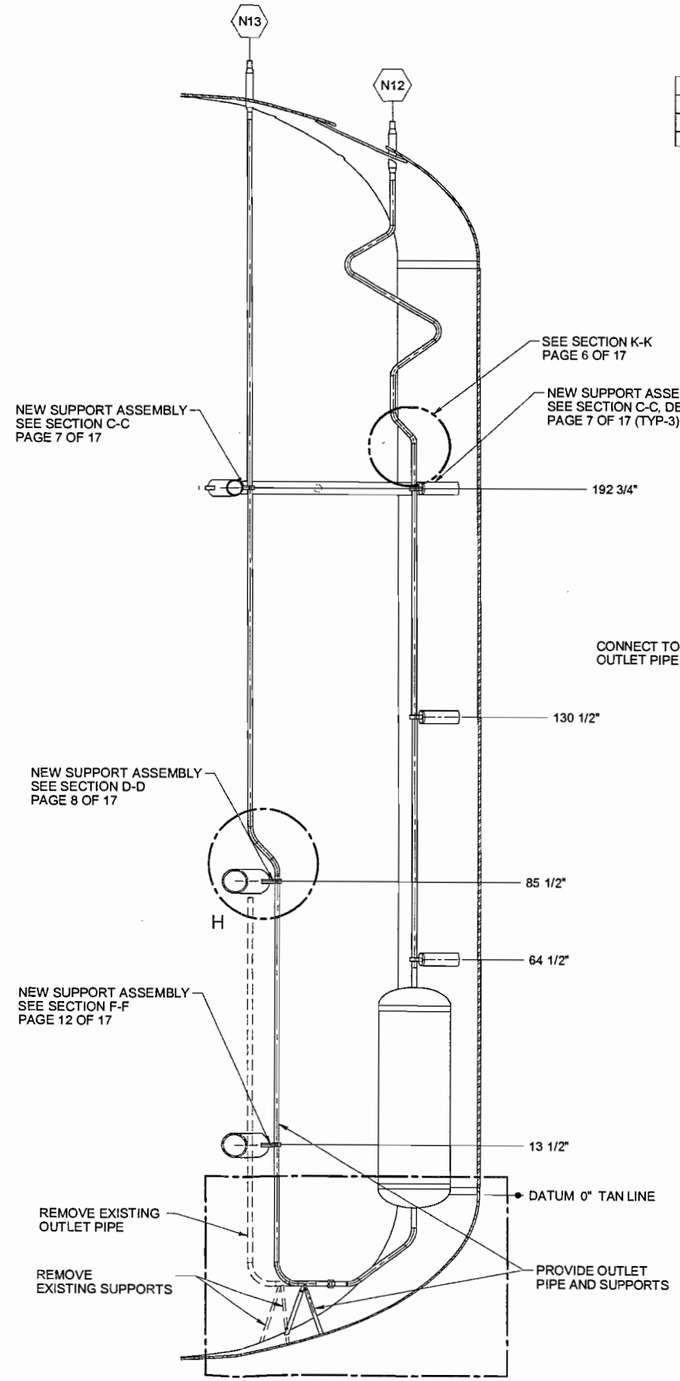

SAMPLER PUMP RFD ASSEMBLY
SCALE: 1/20
SEE DWG 24590-QL-POD-MVA0-00001-03-01
FOR REFERENCE BOM ITEMS

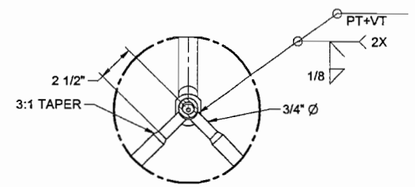

DETAIL J
SCALE: 1/5

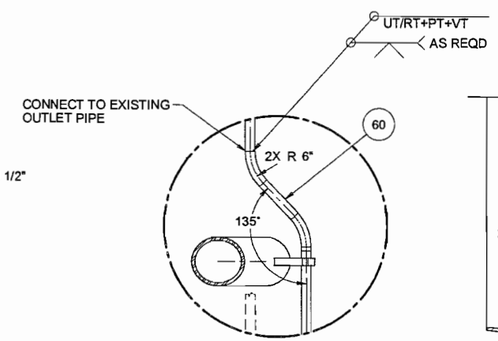

DETAIL H
SCALE: 1/10

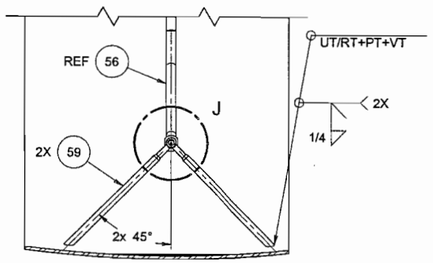

SECTION R-R
SCALE: 1/10

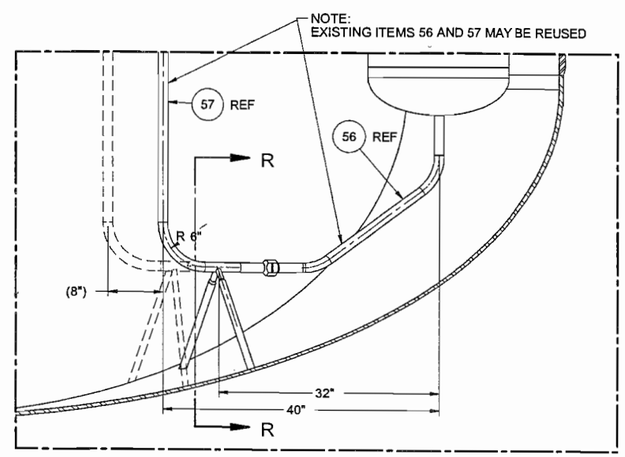

SAMPLER PUMP RFD DETAIL
SCALE: 1/10

Some information on page 4h15 may appear to be illegible, however, the information necessary is legible.

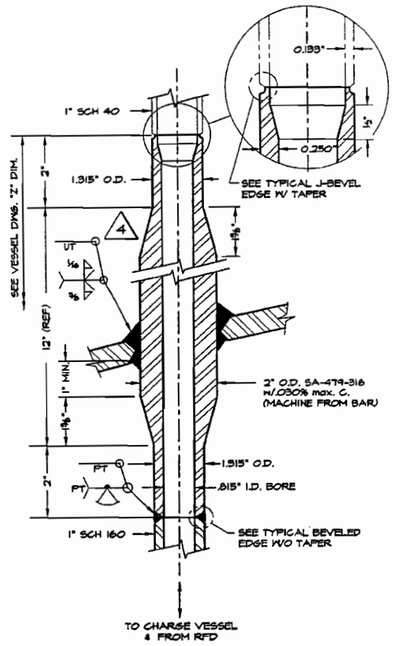

2" MACHINED BAR NOZZLE TO INTERNALS
SCALE: 1/2" = 1"
N12 N13 2

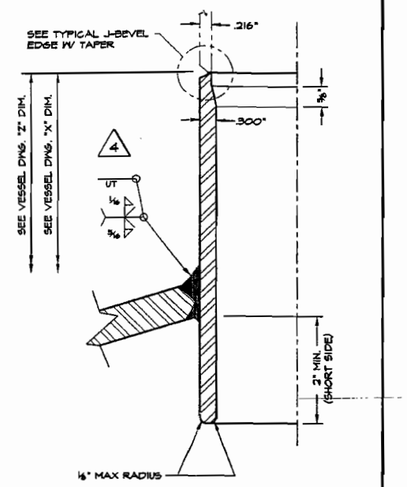

3" SCH 80 NOZZLE W/ INT. PROJECTION
SCALE: 3/4" = 1"
N40 2

2F590-PTF-MV-UFP-VSL-000062A
Job No. 24590
Bechtel National, Inc.
SUPPLIER DOCUMENT STATUS
1. [X] Work may proceed.
2. [ ] Revise and resubmit. Work may proceed subject to resolution of indicated comments.
3. [ ] Revise and resubmit. Work may not proceed.
4. [ ] Review not required. Work may proceed.
Permission to proceed does not constitute acceptance or approval of design details, calculations, analyses, test methods, or materials developed or selected by the supplier and does not relieve supplier from full compliance with contractual obligations.
REVIEWED M MV MK
G-321 Document Category 1-3
[From Supplement A to G-321-E (B) or G-321-V (V), as applicable, or "N/A" if SSRS is used]
Supersedes BNI Document No. Rev.
[When applicable]
Accepted by H. KHURANA 01/13/05
Released by
[When applicable]

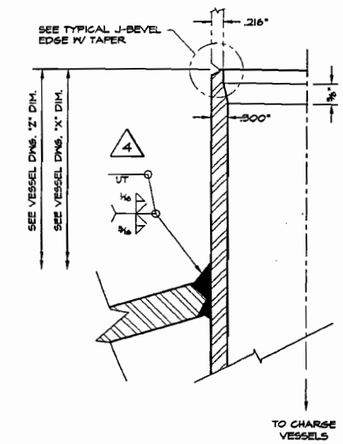

3" SCH 80 INLET TO INTERNALS
SCALE: 3/4" = 1"
N23 N24 N25 N26 N45

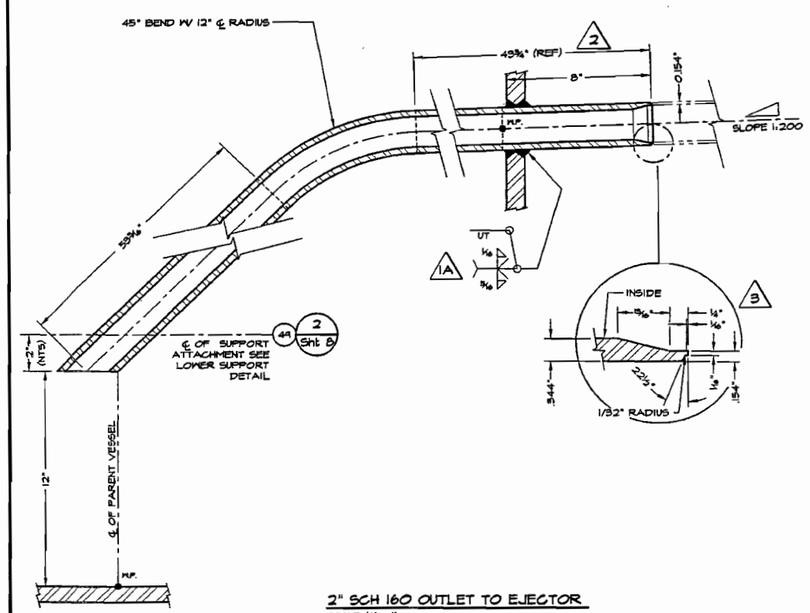

2" SCH 160 OUTLET TO EJECTOR
SCALE: 1/2" = 1"
N17

REMOVE AND REPLACE WITH 2" SCH 160, BY RPP-WTP

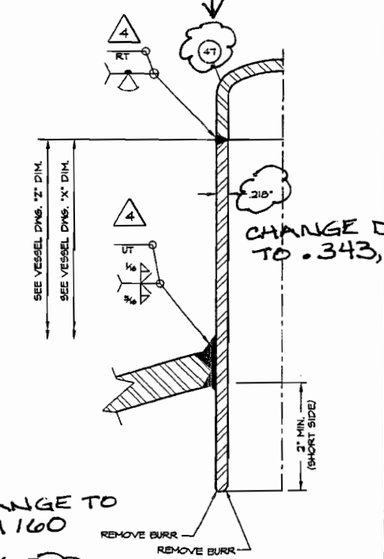

CHANGE DIMENSION TO .343, BY RPP-WTP

CHANGE TO SCH 160

2" SCH ~~80~~ 160 CAPPED NOZZLE W/ INT. PROJECTION
SCALE: 3/4" = 1"
N38 2

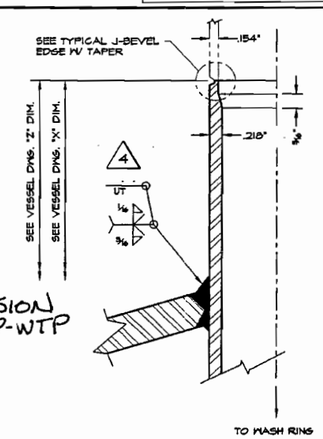

2" SCH 80 INLET TO INTERNALS
SCALE: 3/4" = 1"
N34 N35 N36

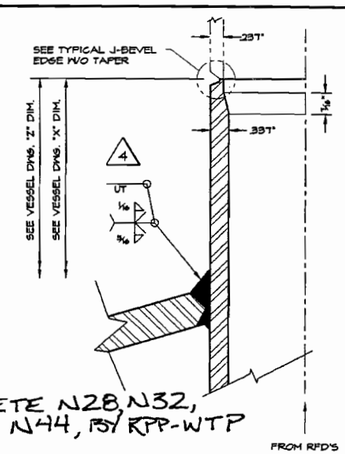

DELETE N28, N32, AND N44, BY RPP-WTP

4" SCH 80 OUTLET FROM INTERNALS
SCALE: 3/4" = 1"
N28 N29 N30 N32 N44

R10443776

REVISIONS

NO	DESCRIPTION	REV BY	APD BY	DATE
5	NO CHANGES	SMT	MJV	12/06/04
4	REVISED PER CUSTOMER COMMENTS AND ENGINEERING CHANGES	SMT	MJV	11/05/04
3	REVISED PER CUSTOMER COMMENTS AND ENGINEERING CHANGES	SMT	MJV	06/01/04
2	REVISED PER CUSTOMER COMMENTS AND ENGINEERING CHANGES	MDH	MJV	04/28/03
1A	REVISED PER CUSTOMER COMMENTS AND ENGINEERING CHANGES	MDH	MJV	07/18/02
1	DRAWING ADDED	MJV	MDH	04/28/02

NORTHWEST COPPER WORKS, INC.
1303 N. RIVER STREET • PORTLAND, OREGON • 97227

180" I.D. ULTRAFILTER PERMEATE COLLECTION VESSEL NOZZLE DETAILS (2 OF 3)

BECHTEL NATIONAL INC.
3000 George Washington Way
Richland, Washington 99352

EQUIP. NO.	UFP-VSL-000062A		
P.O. NO.	24590-QL-POD-MVAO-00003 REV 0		
SCALE AS NOTED	JOB NO. 3005	DWG. NO. D-3005	REV 5
DATE 04/28/03	CHKD. BY MJV		
DWN. BY MDH	APPD. BY MDH	SHT. NO. 7 OF 8	

~~REF. DWG 24590-PTF-MV-UFP-00005 REV 0~~
BECHTEL DOC. 24590-QL-POD-MVAO-00001-05-23 REV. 00
DELETED BY RPP-WTP

P:\Swap\ACAD\03\D3005-5 PRELIM Mon Dec 06 09:40:54 2004