R11042813

RIVER PROTECTION PROJECT – WASTE TREATMENT PLANT

ENGINEERING SPECIFICATION

FOR

Forced Circulation Vacuum Evaporator System

ISSUED BY
RPP-WTP PDC

G2, SKETCH I2, PGS I6, I7, I8, I9, I10, J5, J9, J10, J11

Some information on page(s) _____ may appear to be illegible, however, the information necessary for assuring Adequate design is legible
Signature: _____ Date: 23FEB09

Content applicable to ALARA? ☒ **Yes** ☐ **No**

ADR No.
24590-PTF-ADR-M-03-003

Rev
1

Quality Level
Q
DOE Contract No. DE-AC27-01RV14136

NOTE: Contents of this document are Dangerous Waste Permit affecting.

REV	DATE	BY	CHECK	REVIEW	E&NS	DPEM/EM
3	2/18/09	E. Le	W. Wilcox	A. Gorham / ~~J. Julyk~~ 2/18/09	B. Hall	~~J. Roth~~ John July K 2/18/09
2	02/21/07	E. Le	L. Donovan	B. Makadia / J. Julyk	K. Gibson	R. Voke
1	03/24/05	E. Le	S. Crow	J. Julyk	N/A	R. Smith
0	04/24/03	E. Le	G. Butt	J. Julyk	N/A	S. Grabowski

SPECIFICATION No.
24590-PTF-3PS-MEVV-T0001

Rev
3

Revision History

Revision	Reason for Revision
0	Issued for Procurement
1	Incorporated Design Changes: 24590-PTF-3PN-MEVV-00001 24590-PTF-3PN-MEVV-00004 (which incorporated 24590-WTP-SDDR-PROC-04-00104) 24590-PTF-3PN-MEVV-00005 24590-PTF-3PN-MEVV-00006 with the following revisions: 1. Revised section 1.2.1 to delete duplicate information regarding internal deentrainment separation system for FEP & TLP separator vessels. 2. Revised section 1.2.1 to group support structure with their associated separator vessels. 3. Revised section 1.2.1 to provide more descriptive steam conditioning assembly of FEP & TLP evaporators for clarification. 4. Revised section 1.2.1 to add reboiler steam condensate transfer stations for FEP & TLP evaporators for Seller's additional scope of supply. 5. Revised section 1.2.1 to change "mechanical seal" to "pump seal" 6. Revised section 3.19.5 to delete "following by vertical up-ending" at the end of the 1st sentence 7. Revised section 3.20.3.5 to delete "assemblies" in the 1st sentence 24590-PTF-3PN-MEVV-00007 24590-PTF-3PN-MEVV-00009 1. Incorporated 24590-WTP-SDDR-PROC-04-00994, 24590-WTP-SDDR-PROC-04-00995, 24590-WTP-SDDR-PROC-04-01193, 24590-WTP-SDDR-PROC-04-01194, 24590-WTP-SDDR-PROC-04-01270, 24590-WTP-SDDR-PROC-04-01271, 24590-WTP-SDDR-PROC-04-01272, 24590-WTP-SDDR-PROC-04-0127<u>3</u> and 24590-WTP-SDDR-PROC-05-00181 2. Revised section 2.1.2 for clarifications 3. Revised wording in section 4.2.12 for clarification 4. Revised section 8.18 to delete "for off-gas piping pieces" from the 1st sentence 24590-WTP-SDDR-PROC-05-00208. Revised Appendix E to include reboiler steam condensate transfer stations. Revised Appendix P to add drawings for reboiler nozzle locations. Added Appendix T to provide design evaluation inputs
2	Incorporated Design Changes: 24590-PTF-3PN-MEVV-00012 with revision of section 3.4.3.3 for clarification 24590-PTF-3PN-MEVV-00014 with the following revisions 1. Revised section V8b of appendix V to remove digitized data verification requirement that is no longer applicable 2. Revised section V5.2 of appendix V to add "or greater" at the end of the sentence for clarification. 24590-PTF-3PN-MEVV-00019

Revision	Reason for Revision
	24590-WTP-SDDR-M-05-00438
	24590-WTP-SDDR-MS-07-00029
	Deleted Appendix R – outdated In-Structure Response Spectra (ISRS) curves
	Revised section 3.19.**5** to add "follow**ed** by vertical up-ending" from 24590-PTF-3PN-MEVV-00006 which was erroneously deleted in revision 1 of this specification
	Revised section 3.20.3.5 to add "assemblies" to the 1st sentence from 24590-PTF-3PN-MEVV-00006 which was erroneously deleted in revision 1 of this specification
	Revised section 4.2.12 to correct typos
	Revised section 8.1.8 to add "off-gas piping pieces" from 4590-PTF-3PN-MEVV-00009 which was erroneously deleted in revision 1 of this specification
	Revised sections 1.2.6, 3.4.3.2, and 3.9.13 to remove low-pressure steam information which is no longer applicable
	Revised section 1.2.12 to indicate that seismic information is provided in Appendix V.
	Revised section 1.2.14 to correct steam supply information
	Deleted section 1.3.29 to correct Buyer's scope of work
	Revised section 1.4.9 to delete outdated acceleration values
	Revised sections 1.4.11, 1.4.13, 1.4.15, 1.4.16, 1.4.18, 1.4.25, 1.4.26, 1.4.29, 1.4.30, and 1.4.32 to correct definitions
	Revised sections 2.2.6, 2.2.15, and 2.2.16 to be consistent with SRD
	Add sections 2.2.34, 2.2.35, and 2.2.36 for references.
	Revised section 3.1.17 to add "gpm" at the end of 2nd bullet.
	Added section 3.14.20 to incorporate 2" drain nozzle inlet to reboiler steam condensate vessel from desuperheater.
	Revised Appendix L to provide the location of 2" inlet drain nozzle.
	Revised section 3.16.3 to provide seismic analysis requirements in the Appendix V.
	Revised section 4.2.8 to clarify that threaded flanges and fittings are not allowed only in the black cells.
	Revised section 6.6.3 to clarify the weld acceptance criteria
	Revised section 7.2 to clarify the stimulant test using non-radioactive cesium is not required.
	Revised section 11.2 to clarify design stress/seismic report submittal requirements.
	Revised sections 3.1.9, 3.9.2, 3.10.2, 3.11.4, 3.12.3 to clarify nozzle loading requirements
	Revised sections 2.4.60 and 2.4.61 to correct typos
	Revised Appendices A, B, and C to remove outdated references.
	Revised Appendix D to correct steam supply conditions.
	Revised Appendix E to add a note for clarification regarding QL-1 and QL-2 used by Seller.

Revision	Reason for Revision
3	Incorporated Design Changes: 24590-PTF-3PN-MEVV-00022 24590-PTF-3PN-MEVV-00023 with revision to incorporate new operating temperature and add a note to provide clarification on operating and abnormal temperature values and punctuation correction. 24590-PTF-3PN-MEVV-00025 with addition note to clarify electrical and process connectors that are not provided by Buyer shall be procured as commercial material and correct spelling. 24590-WTP-SDDR-M-06-00395 Rev. 1 by reference. 24590-WTP-SDDR-MS-07-00030 Rev. 1 by reference. Global typo correction: Change "section" to "Section" and change "flow meter" to "flowmeter" Revised Section 1.2.1 to (1) clarify that exceptions in section 1.3, (2) correct vendor scope of supply for steam conditioning system components, and delete "or plastic" from note 1. Revised Section 1.2.2 to clarify minimum separator Cesium decontamination factor requirement. Revised Section 1.2.11 to remove below-the-hook lifting device of the demister pads assembly for clarify. The below-the-hook lifting device including the lifting crane was removed from Seller scope of supply as the contract was negotiated in 2003. Revised Section 1.2.12 to delete the last sentence regarding response spectra and damping values since they are no longer valid. Revised Section 1.2.20 to delete thermal expansion upward requirement since it is no longer valid. Revised Section 1.2.22 to change Appendix P to Appendix V for reboiler nozzle locations. Revised Sections 1.2.23, 3.20.2.2, and 7.15 to change a recorded video. Deleted Section 1.2.29 since it is no longer applicable. Added Section 1.2.34 to clarify Seller's division of responsibility regarding reboilers. Added Section 1.2.35 to clarify Seller's division of responsibility regarding separator vessels. Added Sections 1.2.36 through 1.2.39 to clarify Seller's division of responsibility. Added Section 1.2.40 to include Seller's responsibility of equipment environmental qualification for Q-components. Added Section 1.2.41 to include Seller's responsibility for providing CMTR for each staubli connector components. Added Section 1.2.42 to include Seller's responsibility for coordinating with Buyer to finalize all reboiler nozzle locations. Revised Section 1.3.16 to clarify PEP is replaced by a rigid concrete-filled steel frame. Revised Section 1.3.18 to delete reboiler and support frame assemblies since they are no longer valid. Revised Section 1.3.31 to clarify steam conditioning components and desuperheater vessels are Seller's supply. Added Section 1.3.33 to clarify Buyer's division of responsibility regarding reboilers. Added Section 1.3.34 to clarify Seller's division of responsibility regarding separator vessels. Revised Section 1.4.15 to delete QL-1 and QL-2 designations which are no longer used. Revised Section 1.4.32 to add acronyms "EQD", "PTFE", and change "QL" to "Q". Revised Section 1.5 for clarity. Revised Section 1.6.1 to correct "QL" to "Q".

Revision	Reason for Revision
	Revised Section 2.2.6 to remove "1995 or later".
	Revised Section 2.2.11 to add "specification" which was inadvertently omitted.
	Revised Section 2.2.15 to delete the year of standard.
	Revised Section 2.2.27 to add "FED STD" which was inadvertently omitted.
	Revised Section 2.2.28 to add "ASTM" which was inadvertently omitted.
	Delete Sections 2.2.33 and 2.2.34 since they are duplicate of Sections 2.2.24 and 2.2.25.
	Revised Section 2.3.1 to provide additional applicable specifications.
	Revised Section 2.4 to provide additional applicable drawings and datasheets.
	Added Sections 2.5 and 2.6 to incorporate design changes incorporated by SDDRs.
	Revised Section 3.1.11 to clarify the sound level requirements.
	Revised Section 3.1.25 to clarify preliminary jumper connection in Appendix V and final locations are to be coordinated with the Buyer.
	Revised Section 3.1.26 to change Appendix P to Appendix V.
	Revised Section 3.1.27 to correct Appendix V instead of Appendix P.
	Revised Section 3.1.28 to clarify that hydro test connections for axial pumps to be provided by Seller.
	Revised Section 3.1.29 to clarify reboiler nozzle loads and support loads provided in Appendix V.
	Revised Section 3.1.33 to delete steam conditioning skid and correct condenser skid assembly.
	Added Section 3.1.34 to include equipment environmental qualification in Seller's scope of work.
	Added Section 3.1.35 to clarify that condenser skids shall be designed with cast-in-anchors.
	Added Section 3.1.36 to clarify the application of inelastic energy absorption coefficient.
	Added Section 3.1.37 to add supplier design analysis requirement specification.
	Revised Section 3.3.4 to correct process DF to separator DF.
	Revise Section 3.4.2.2 to delete last sentence which refers to Appendix P.
	Revise Section 3.4.3.4 to reflect cooling water supply conditions.
	Revised Section 3.5 to provide new equipment environmental qualification data references.
	Revised Section 3.7.2 to delete recirculation pump structural support requirements which are no longer valid.
	Revised Section 3.7.3 to clarify that recirculation pump motor qualified to total integrated rad as specified in MDS.
	Revised 3.9.2 for clarity.
	Added Section 3.9.18 to clarify Seller's division of responsibility regarding reboilers.
	Added Section 3.9.19 to clarify Buyer's division of responsibility regarding reboilers.
	Revised 3.10.2 for clarity.
	Revised Section 3.10.7 to correct typo.
	Revised Section 3.10.9 to clarify that a 2 inch purge air inlet nozzle applicable for FEP separator vessels only as indicated on associated P&IDs.
	Added Section 3.10.17 to clarify division of responsibility regarding separator vessel external spray ring piping assembly for demister pad.
	Added Section 3.10.18 to provide boundary condition for separator vessel lower frame.

Revision	Reason for Revision
	Revised Section 3.11.4 for clarity.
	Revised Section 3.12.3 for clarity.
	Added Section 3.12.13 to provide new operating cycle value for after-condensers.
	Revised Section 3.14 to revise title.
	Revised Section 3.14.13 to add the word "approximately".
	Revised Section 3.14.19 to add the word "or better".
	Added Sections 3.14.21 through 3.14.25 to provide specification requirements for steam conditioning system components.
	Revised Section 3.15.5 to add the word "position" for clarity and delete the nozzle tolerance measurement device requirement.
	Revised Sections 3.16.3, 3.16.4, and 3.16.6 to change "seismically analyzed and qualified" to "analyzed and designed" for clarity.
	Revised Section 3.16.5 to remove the last sentence for clarity.
	Deleted Section 3.16.7 for clarity.
	Revised Section 3.16.9 to clarify PEP is replaced by a rigid concrete-filled steel frame and delete seismic qualification for SC-III flowmeters since they are no longer applicable.
	Revised Section 3.19.4 to delete "or five (5), based on the material ultimate strength, whichever is more conservative" to be consistent with specification 24590-WTP-3PS-MJJ0-T0001.
	Revised Section 4.2.3 to clarify the requirements of fabrication materials for vessels and skids/structural frames.
	Revised Section 4.2.4 to clarify the nut material requirement is for skids/structural frames.
	Revised Section 4.2.8 to clarify that the use of bolts on separator vessel body flanges and upper lateral support frames are acceptable.
	Revised section 4.2.12 to (1) clarify that the use of alternate materials ASTM A403-99 and ASTM A182-98 are only applicable to vessel FEP-VSL-00005 as allowed in 24590-WTP-SDDR-PROC-04-01273; (2) to correct typo "AMT" to "ASTM"; and (3) to remove ASTM materials from ASME Section II in specified material column for correction.
	Revised Section 4.5.5 to clarify the use of PTFE and its requirements.
	Revised Sections 5.1.1 and 5.1.2 to add the word "engineering" which was inadvertently omitted.
	Add section 5.1.5 to clarify structural welding requirements.
	Revised Section 6.5.1 to correct "QL" to "Q".
	Deleted Section 7.2 since it is no longer applicable.
	Revise Section 8.2.14 to remove steam conditioning skids since they are no longer valid and replace P04 with High Build Epoxy for clarity.
	Revise Section 8.2.15 to replace P02 with Organic Zinc Epoxy Primer and P06 with Epoxy Novolac.
	Revised Section 9.2 to correct "QL" to "Q".
	Revised Section 11.2 to incorporate supplier design analyses spec.
	Added Section 11.5.10 to indicate vendor calculations can be submitted as applicable.
	Added Section 11.7.13 to request vendor to submit calculations as applicable.
	Revised Section 11.8.24 to clarify that integrated acceptance test using non-radioactive cesium is not required.

Revision	Reason for Revision
	Revised Appendix E for clarity on design levels and correct quality and seismic category designation for evaporator steam conditioning system components. Revised Appendix P to delete sketches P-1, P-2 and large bore connector loads which are no longer valid. Add a note to require Seller needs to coordinate nozzle. Revised Appendix T to add Section T.14 to provide design inputs for steam conditioning components Revised Appendix V to incorporate new design inputs: (1) Modify Sections V2 to change RGM ISRS curves to WSGM ISRS curves. Delete critical damping determination since it is no longer valid. (2) Modify Sections V6 to change RGM ISRS curves to WSGM ISRS curves. (3) Revise V7 to include category 7.0 of G321-E. (4) Modify Sections V8b and delete attachment #1 to change RGM ISRS curves to WSGM ISRS curves. (5) Revise Section V8e and attachment #4 to provide new separator vessel nozzle N13 loads in tables 1, 2, 3 of attachment #4. Correct typo. (6) Revise Section V8f to correct typo. (7) Revise Section V8g and add attachment #9 to provide new reboiler nozzle loads, support loads, small bore piping locations in attachment #9. Correct typo. (8) Revise Section V8h to correct typo. (9) Add Section V8m and attachment #7 to require Seller to perform analyses in accordance with the analytical methodology as described in attachment # 7. (10) Add Section V8n to provide piping penetration clearance. (11) Add Section V8o to provide ceiling steel stiffness calculation guideline for FEP/TLP separator frame interfaces. (12) Add Section V8p to provide design inputs for separator vessel base interfaces. (13) Add Section V8q to provide design inputs for evaporator system hydro. (14) Add Section V8r and attachment #8 to provide maximum allowable skid foot print for FEP/TLP condensers. (15) Add Section V8s and attachment #10 to provide pressure and temperature inputs for vessel internal piping and utility piping inlet nozzles. (16) Add Section V8t to provide insulation information. (17) Add Section V8u and attachment #11 to provide modification requirements to TLP reboiler frame and sole plates. (18) Add Section V8v and attachment #12 to provide primary condenser cooling water isometrics for coupling analysis. (19) Revise attachment #5 to add a sketch to show typical member sizes for FEP and TLP pump support frames as design concept.

Contents

1 Scope 5
1.1 Project Description and Location 5
1.2 Equipment, Material, and Services Required 5
1.3 Work by Others 14
1.4 Definitions 16
1.5 Mechanical Data Sheets 20
1.6 Safety/Quality/Seismic Classifications 20
2 Applicable Documents 20
2.1 General 20
2.2 Codes and Industry Standards 21
2.3 Reference Documents 22
2.4 Reference Drawings / Data Sheets 25
2.5 Design Changes Incorporated by Design 31
2.6 Design Changes Incorporated by Reference 31
3 Design Requirements 31
3.1 General 31
3.2 Basic Function 35
3.3 Performance 36
3.4 Design Conditions 37
3.5 Environmental Conditions 39
3.6 Feed Pumps 39
3.7 Recirculation Pumps 41
3.8 Concentrate Pumps 43
3.9 Reboilers 44
3.10 Evaporator Separator Vessels 45
3.11 Primary Condensers 47
3.12 Secondary Condenser System 47
3.13 Evaporator Process Condensate Vessels & Pumps 48
3.14 Antifoam Skid, Reboiler Condensate Transfer Stations, and Steam Conditioning Components 50
3.15 Mechanical Handling Requirements 52
3.16 Loadings 52
3.17 Electrical Requirements 53
3.18 Instrumentation and Control Requirements 54

Contents

3.19 Lifting Requirements 55
3.20 Accessibility and Maintenance 56
4 Materials 58
4.1 Positive Material Identification 58
4.2 Construction 58
4.3 Vessels 60
4.4 Pipework 60
4.5 Prohibited Materials 60
4.6 Storage of Special Materials (e.g., stainless steel) prior to work 60
5 Fabrication 61
5.1 General 61
5.2 Welding 61
6 Inspections and Examinations 62
6.1 Nondestructive Examinations 62
6.2 Dimensional Inspections 62
6.3 Visual Weld Inspections 63
6.4 Liquid Penetrant Test 63
6.5 Radiography 64
6.6 Magnetic Particle Examination 64
6.7 Final Inspection 65
6.8 Inspection and Test Status 65
6.9 Control of Nonconforming Items 65
7 Testing 65
7.1 Shop Tests 65
7.2 Deleted. 66
8 Preparation for Shipment 66
8.1 General Requirements 66
8.2 Painting 67
8.3 Tagging 69
9 Quality Assurance 70
9.1 General Commercial Designation (CM) Requirements 70
9.2 Quality Level (Q) Requirements 70
10 Configuration Management 71

Contents

11 Documentation and Submittals 71

11.1 General 71

11.2 Calculations 72

11.2.1 ANSI/AISC N690 Steel Frame / Support Designs 72

11.2.2 ASME VIII, Div 2, Appendix 4, Vessel including internal supports/components 72

11.2.3 ASME B31.3 Piping Design 72

11.3 As-Built Drawings 72

11.4 Dimensional Record Drawings 73

11.5 Project Start 73

11.6 30 % Design Review 73

11.7 60 % Design Review 74

11.8 90 % Design Review 74

11.9 Final Design Review 80

Appendices

A Waste Feed Evaporator Stream Data A-1

B Treated LAW Evaporator Stream Data B-1

C Predicted Maximum Radionuclide C-1

D Evaporator Process Data D-1

E Quality Level and Seismic Category for Evaporator Equipment E-1

F Separator Vessel Skid Support Layout F-1

G Hot Cell Remote Impact Wrench G-1

H Deleted H-1

I FEP Evaporator Equipment Skids Location and Layout Sketches I-1

J TLP Evaporator Equipment Skids Location and Layout Sketches J-1

K Antifoam Equipment Skid Location and Layout Sketches K-1

L Reboiler Steam Condensate Transfer Station Location and Layout Sketches L-1

M Deleted M-1

N Deleted N-1

O Nondestructive Examination (NDE) of Fabricated Pipe Welds O-1

P Reboiler Skids and Preliminary Nozzle Loads at Grayloc Connections P-1

Q Reboilers and Recirculation Pumps Layout Q-1

R Deleted R-1

S Manufacturers Standard Coating Data Sheet S-1

T Design Evolution Inputs T-1

U Deleted U-1

V FEP/TLP Evaporator Systems Composite Analyses V-1

1 Scope

1.1 Project Description and Location

The Hanford Tank Waste Treatment and Immobilization Plant (WTP) is a complex of waste treatment facilities where the US Department of Energy (DOE) Hanford Site tank waste will be pretreated and immobilized into stable glass form via vitrification. The WTP Contractor will design, build, and startup the WTP pretreatment and vitrification facilities for the DOE Office of River Protection (ORP). The waste treatment facilities will pretreat and immobilize the low-activity waste (LAW) and high-level waste (HLW) currently stored in underground storage tanks at the Hanford Site.

The Hanford Site occupies an area of about 560 square miles and is located along the Columbia River, north of Richland, WA in the U.S.A. The WTP Facility will be constructed at the east end of the 200 East Area of the Hanford Site. The counties of Benton, Franklin, and Grant surround the Hanford Site.

1.2 Equipment, Material, and Services Required

This specification provides the requirements for the design, analysis, fabrication, quality assurance, inspection, testing, qualification, and labeling of three (3) forced circulation vacuum evaporator systems for use in the WTP Pretreatment Facility. This specification also provides the requirements for the supply of services, manuals, instructions, procedures, and other associated documentation.

The scope of work for the Seller includes all work defined in this specification and its addenda and attachments. Work shall include, but is not limited to, the following:

1.2.1 Provide fully detailed designs, drawings, diagrams, supporting calculations, supporting analyses, procedures, installation instructions, and all labor, materials, equipment, and services necessary to manufacture, test, inspect, label and package for shipment three (3) sets of the forced circulation vacuum evaporator system hardware, including handling and servicing equipment, all fabricated to appropriate NQA-1 requirements in accordance with all specification requirements, with the deliverables being reports, calculations, procedures, data sheets, drawings and diagrams as outlined in this specification and the Material Requisition (MR). **See exceptions in Section 1.3.** Refer to tables below for what shall be included as part of evaporator systems to be provided.

Waste Feed Evaporator (FEP) Systems

Equipment	Tag
Two (2) FEP Separator Vessels. Each vessel with support structure, three layers of de-entrainment trays, two layers of mesh pads and sprays.	FEP-SEP-00001A FEP-SEP-00001B
Two (2) FEP Reboilers with Graylocs and PUREX nozzles installed in accordance with this specification and stainless steel structural support frames.	FEP-RBLR-00001A FEP-RBLR-00001B
Two (2) FEP Recirculation Pumps. Each pump includes motor, pump seals, adjustable speed drive, **all remote electrical connectors, and process connectors that are identified by Seller.** The pump inlet and outlet pipe ends prepared for butt welding.	FEP-PMP-00009A FEP-PMP-00009B
Two (2) FEP Condenser skid. Each skid consisting of Primary Condenser, 1st stage steam ejector, Intercondenser, 2nd stage steam ejector, Aftercondenser and interconnecting piping.	FEP-COND-00001A FEP-COND-00002A FEP-COND-00003A FEP-EJCTR-00040 FEP-EJCTR-00041 FEP-COND-00001B FEP-COND-00002B FEP-COND-00003B FEP-EJCTR-00042 FEP-EJCTR-00043
One (1) FEP Condensate Vessel for both FEP systems. Vessel includes skirt and support ring.	FEP-VSL-00005
Two (2) FEP Condensate Pumps include base plate, motor, variable speed drive, and mechanical seal mounted on common skid.	FEP-PMP-00006A FEP-PMP-00006B
One (1) Antifoam Vessel serves the FEP and TLP separators. Vessel includes skirt.	AFR-TK-00001
Three (3) Antifoam Pumps (common for FEP and TLP systems) with base plate and motor mounted on common skid.	AFR-PMP-00006 AFR-PMP-00007 AFR-PMP-00008
Two (2) sets of FEP offgas piping 30" diameter from separator to Primary condenser. Piping includes pipe hangers.	"Note 1"
Two (2) sets of FEP Steam Conditioning System components. Each set consists of two (2) control valves, two (2) flowmeters, and one (1) absorption desuperheater.	**FEP-PV-0267** **FEP-TV-0202** **FEP-FT-0201** **FEP-FT-0252** **FEP-DHTR-00001** **FEP-PV-0467** **FEP-TV-0402** **FEP-FT-0401** **FEP-FT-0452** **FEP-DHTR-00002**
Four (4) lifting yokes. One lifting yoke for three (3) separator vessels, two lifting yokes for three (3) reboiler and support frame assemblies, and one lifting yoke for three (3) recirculation pumps	"Note 1"
Two (2) FEP Reboiler Steam Condensate Transfer Stations including level tank, transfer pump and condensate recycle pump.	FEP-VSL-00021 FEP-PMP-00010A FEP-PMP-00010B FEP-VSL-00022 FEP-PMP-00011A FEP-PMP-00011B

Note 1: Stainless steel tags (foil strip is not acceptable) shall be firmly attached by stainless steel wire or stainless steel screws to each separate item. Each tag shall be stamped with, as a minimum: (1) Purchase Order Number, (2) Purchase Order item number, and (3) Equipment/Instrument Tag number.

Treated LAW Evaporator (TLP) System

Equipment	Tag
One (1) TLP Separator Vessel with support structure, three layers of de-entrainment trays, two layers of mesh pads and sprays.	TLP-SEP-00001
One (1) TLP Reboiler with Graylocs and PUREX nozzles installed in accordance with this specification and stainless steel structural support frame.	TLP-RBLR-00001
One (1) TLP Recirculation Pump including motor, pump seals, adjustable speed drive, **all remote electrical connectors, and process connectors that are identified by Seller.** The pump inlet and outlet pipe ends prepared for butt welding.	TLP-PMP-00001
Two (2) LAW SBS Feed Pumps with base plate, motor, pump seals, and adjustable speed drive.	TLP-PMP-00005A TLP-PMP-00005B
Two (2) TLP Concentrate Pumps with base plate, motor, pump seals, and adjustable speed drive.	TLP-PMP-00011A TLP-PMP-00011B
One (1) TLP Condenser skid consisting of Primary Condenser, 1st stage steam ejector, Intercondenser, 2nd stage steam ejector, Aftercondenser and interconnecting piping.	TLP-COND-00001 TLP-COND-00002 TLP-COND-00003 TLP-EJCTR-00064 TLP-EJCTR-00067
One (1) TLP Condensate Vessel with support.	TLP-VSL-00002
Two (2) Condensate Pumps include base plate, motor, variable speed drive, and mechanical seal mounted on common skid.	TLP-PMP-00002A TLP-PMP-00002B
One (1) set of offgas piping 30" diameter from Separator to Primary Condenser with pipe hangers.	"Note 1"
One (1) set of TLP Steam Conditioning System components which consist of two (2) control valves, two (2) flowmeters, and one (1) absorption desuperheater.	**TLP-PV-0355** **TLP-TV-0302** **TLP-FT-0301** **TLP-FT-0350** **TLP-DHTR-00001**
One (1) TLP Reboiler Steam Condensate Transfer Station including level tank, transfer pump and condensate recycle pump.	TLP-VSL-00047 TLP-PMP-00012A TLP-PMP-00012B

Note 1: Stainless steel tags (foil strip is not acceptable) shall be firmly attached by stainless steel wire or stainless steel screws to each separate item. Each tag shall be stamped with, as a minimum: (1) Purchase Order Number, (2) Purchase Order item number, and (3) Equipment/Instrument Tag number.

1.2.2 Provide a guarantee that all equipment listed in Section 1.2.1 will perform in accordance with the requirements of this specification and all referenced codes, standards, and documentation in section 2 of this specification. Process warranty shall include **obtaining minimum separator Cesium decontamination factor of 6.0E+07 per Section 3.3.4.** The process warranty is provided with the following conditions: (1) the evaporator systems are operated per Seller's instructions within mutually agreed parameters and chemical analytes that are representative of waste and process conditions, and (2) mutual agreement that foaming within the Separator Vessel is adequately controlled by the Buyer-supplied antifoaming reagent.

1.2.3 Perform sizing calculations and process performance modeling to ensure that each component of the evaporator systems is properly specified to ensure desired performance.

1.2.4 Provide the following nonreplaceable components/equipment which shall attain a 40-year life:

- Separator vessels and all their internal parts (exception made for demister pad life).
- Section of separator offgas pipework located inside the R5/C5 black cells.

1.2.5 Deleted.

1.2.6 **Provide three (3) sets of steam conditioning system components for FEP and TLP evaporators to reduce high pressure steam to produce Seller's specified saturated pressure steam for optimal reboiler condition. Each set consists of two (2) control valves, two (2) swirl flowmeters, and one (1) absorption desuperheater.**

1.2.7 Provide specifications and data sheets during contract performance for Buyer to procure the following equipment/components.

- FEP feed pumps (FEP-PMP-00007A/B)
- FEP concentrate pumps (FEP-PMP-00008A/B)

1.2.8 Provide evaporator skids, equipment, components, and structural supports with the materials of construction as specified per this specification and on the attached data sheets in Section 2 of the MR. The structural supports for evaporator equipment shall match with Buyer's provided embed layout.

1.2.9 Provide evaporator systems that accommodate the wall penetrations, piping layout, equipment dimension envelopes, and equipment locations as specified in Appendices H, I, and J.

1.2.10 Provide stainless steel skid framing to match Buyer embed plates for all three separator vessels. The vessel skid shall conform to the proposed skid layout dimensions shown in the Appendix F.

1.2.11 Provide below-the-hook lifting devices for installation, commissioning, and operation/maintenance of reboiler and recirculation pump. These will include lifting yokes, beams, fixtures, etc., according to Buyer design constraints for remote handling, which will be provided in 30 % design review stage. Seller is also to provide all special lifting equipment required for installation and maintenance of the evaporator systems.

1.2.12 Provide seismic analysis for evaporator structures, systems, and components. Seismic analysis shall also be performed for reboiler and support frame assemblies. Seismic model shall include: (1) vessel/equipment, (2) skid frames, and (3) supporting posts. For post/embeds locations and details, see drawings 24590-PTF-DD-S13T-00023 thru -0030, 24590-PTF-DD-S13T-00049, 24590-

PTF-SS-S15T-00311 thru -00318, 24590-PTF-SS-S15T-00352, and 24590-PTF-SS-S15T-00354.

1.2.13 Provide the thermal and static stress analyses for the evaporator structures, systems, and components. Seller shall also provide fatigue analysis to support a 40 year design life for the evaporator system. The fatigue analysis shall include all calculations and all supporting data. Buyer will provide the necessary cyclic data for Seller to perform an assessment regarding the fatigue life of the equipment. However, Seller will be responsible for confirmation that the cyclic data has been accurately interpreted before proceeding with the component fatigue analysis.

1.2.14 Identify all interfaces and requirements for external connections with equipment and services supplied by the Buyer. The interface system data parameters for use in each of the evaporator systems shall include, as a minimum, the following:

Inlet Conditions:

- Feed (flow rate @ 77 °F)
- High pressure steam (see Section 3.4.3.3)
- Service Water (flow rate)
- Antifoam (flow rate)
- Instrument air (flow rate @ pressure)
- Cooling water (flow rate @ 75 °F)
- Operating electrical (kW)
- Installed electrical (kW)

Outlet Conditions:

- Steam Condensate (volumetric flow rate & temperature)
- Process Condensate (volumetric flow rate & temperature)
- Vent System (mass flow rate & temperature)
- Concentrate waste (volumetric flow rate & temperature)

1.2.15 Provide completed Instrument and Mechanical data sheets for all instruments and equipment in the 60 % design review package, utilizing Buyer's supplied instrument data sheet samples attached in the Section 2 of the MR as templates. Buyer will procure the required instruments as detailed by the Seller's control philosophy documents (data sheets) for installation by others. Instrumentation shall conform to 24590-WTP-3PS-JQ07-T0001.

1.2.16 Provide the following for instrumentation and controls of Seller's supplied evaporator systems, equipment, and components to support Seller's software development. Any effect that the evaporator control strategy has on equipment operating parameters (i.e., pump flow rates, line flushes, feed and concentrate takeoff strategies, temperature, or pressure) will be mutually agreed upon prior to being implemented into the design.

- P&IDs
- Instrument data sheets
- Instrument loop diagrams
- Instrument location diagrams

- Control philosophies
- Functional descriptions
- Installation details
- Instrument index which includes functional test and operational set points
- Control and sequencing requirements
- Instrumentation and controls for the FEP evaporator feed and concentrate systems.

1.2.17 Provide a reliability analysis and documentation for each of the three (3) evaporator systems in accordance with the following:

1.2.17.1 A complete Failure Modes and Effects Analysis (FMEA) shall be performed on all the equipment that falls within Seller's scope of supply. This shall include associated components such as vessels, remote handling equipment, pumps have associated valves, (for isolation, for maintenance, for cross-ties, etc.) that have electronic control system which are used for process variability (e.g., flow rate). All support systems (e.g., power, air, water, steam, etc.) will be assumed to be 100 % reliable and will not be considered in the FMEA. Structural failure modes will be limited to seismic events, based on whatever seismic analyses have been performed to support the design. The FMEA shall follow in MIL-STD-1629A as close as possible. The equivalent standard actually used to perform the FMEA shall be provided as a reference (including version and year) at the 60 % design review. Also, an explanation shall be included to demonstrate how the standard has been applied. Failure modes for a reboiler are at least as follows: (1) pin hole, (2) crack, and (3) tube rupture. In addition, Seller shall indicate the possibility of the reboiler tube rupture without precursor of pin hole or crack. Determination of the possibility of reboiler tube rupture without a precursor of a pin hole or crack can be made with a qualitative argument based on fracture mechanics. No stress analysis or fracture mechanics calculations will be required to support the qualitative assessment. Failure modes for the remaining components covered by the FMEA shall be as determined by the Seller; however, the basis for the failure mode shall be specified.

1.2.17.2 Failure rate data for the purposes of an availability assessment (performed by Seller) will be derived using the following hierarchy:

- Supplier In-Service Data
- In-Service Data of similar equipment, preferably in similar applications
- Generic Documented Failure Rate Data – data taken from recognized data sources, e.g., Dexter & Perkins, NPRD 1995, etc.

The specific data source shall be provided at the 60 % design review

1.2.17.3 A maintainability analysis will be undertaken in concert with the Buyer. The analysis will address preventative and corrective

maintenance activities and estimate the required maintenance for the reboiler and appurtenances.

1.2.17.4 A recommended spare parts list, operations manuals, and maintenance manuals shall be provided.

1.2.17.5 Assume operations are 8,760 operating hours per year.

1.2.18 Provide an analysis of operating life for separator vessel, including its internal demister pads, separation trays, and feed distribution, reboiler, and recirculation pump. Justify all assumptions and references.

1.2.19 Provide structural support requirements and recommended support locations for recirculation pumps (i.e., load points, weight distribution, and maximum weight, geometry of equipment, and location of center gravity). In addition, identify areas that cannot be used as load points. Equipment support locations shall be mutually agreed with the Buyer due to remote handling requirements in the hot cell.

1.2.20 Provide design and fabrication of three support frames for reboilers. The support frame shall be welded to the reboiler. The structural supports for reboiler shall meet BNI remoteability requirements such as weight, remotely removable, airlock sizing, crane and impact wrench specified in this document.

1.2.21 Nozzles shall be located to ± 1/4 inch diametric tolerance by the hole in support frame as relative to the master dowel of the reboiler and support frame assembly. Nozzles shall be perpendicular / parallel within 0.5 degree or 1/4 inch whichever is smaller relative to the datum formed by the lower base plate of the reboiler and support frame assembly.

1.2.22 For reboiler nozzle locations, see Appendix **V**. Nozzles shall be located in accordance with 1.2.21.

1.2.23 Provide demonstration and recorded video for demister pad removal and replacement in Seller shop test. Buyer shall be notified prior to demonstration.

1.2.24 Provide radiographic film with technique and reader sheets. Exposed film must be sent, along with a copy of the technique and reader sheets in accordance with Section 3 of the MR. Film must be suitably packaged to preclude moisture and handling damage.

1.2.25 Provide any necessary special remote repair tools for the reboiler and support frame assemblies and recirculation pumps. Special tools shall not include tools readily available in the commercial market. Also, provide a list of commercially available tools needed.

1.2.26 Provide final inspection of completed vessels. Buyer will not be designating a representative to carry out final inspections of the vessels as described per Buyer specification 24590-WTP-3PS-MV00-T0001, *Pressure Vessel Design and Fabrication.*

1.2.27 Provide personnel to perform dimensional measurements for reboiler and support frame assembly, and recirculation pumps at the Seller's shop.

1.2.28 Provide certified reports for all components subject to any heat treatment during manufacture.

1.2.29 **Deleted.**

1.2.30 Provide design documents in progressively complete package form. Design reviews at 30 %, 60 %, 90 % and Final Design to resolve all outstanding issues are planned to include face-to-face discussions between Buyer's personnel and Seller's personnel at Buyer's location. Future meetings will be arranged after Design Review Package Materials have been reviewed and meeting agenda have been established. The discussions are intended to help establish/clarify interface points in system requirements, review design/design progress, design documents, exchange ideas/information, provide design direction. See G-321-E Form for document submittal requirements.

1.2.31 Perform a coupled seismic response spectra dynamic analysis that will qualify the recirculation piping, offgas piping, and provide vessel nozzle loads & nozzle loads at the Grayloc connection on each jumper. See Appendix V for requirement details on coupled dynamic analysis.

1.2.32 Perform detailed FEA uncoupled seismic response spectra dynamic analysis of all SC-I/SC-II evaporator components (including the individual components' internals and frames). See Appendix V for requirement details on FEA uncoupled analysis. Equipment static method is not permitted.

1.2.33 **Design and qualification by analysis of the remote fastener assembly.**

1.2.33.1 **WTP remote fastener drawing no. 24590-WTP-M0-50-00016 shall be used as the starting point for design.**

1.2.33.2 **Design and qualify for fabrication the captive nut retainer for required torques (400 ft-lbs ±25% tightening torque and 700 ft-lbs ±25% loosening torque. Tightening and loosening torques are not adjustable or variable over time). The methodology and acceptance criteria will be per AISC N690.**

1.2.33.3 **Design and qualify the bolts and nuts for fabrication, including the captive bolt retainer and spring for their functional requirements (e.g. vibration, seismic, operation, spring constant, and clearance for compression through captive bolt retainer). The bolts and nuts shall also be qualified in conjunction with specified tightening torque and considering friction without lubrication.**

1.2.33.4 **The remote impact wrench interface requires the bolt head to be hexagonal with 2" across flats and 2.75" high, including a 45 degree conical top.**

1.2.33.5 The torque capability of the remote tooling to install or remove bolts is as given in Section 1.2.33.2. It is acceptable to design a special bolt that is sized to take the seismic load, but it must have a head with dimensions specified in Section 1.2.33.4.

1.2.33.6 Environmental equipment qualification data:

Operating Temperature (To): 59 °F to 131 °F
Abnormal Temperature (Ta): 40 °F to 148 °F (not to be combined with seismic loads)
Gamma dose rate: 2.0 E+06 mRad/hr
Beta dose rate: 2.2 E+08 mRad/hr

Note: The values for the Normal Operating Temperature(To) and Abnormal Condition Temperature (Ta) listed above are actually corresponding to the Abnormal Temperature and the Design Basis Event temperature, respectively in Hot Cell room P-0123. The Abnormal Condition Temperature (Ta) listed above will not be used with seismic loads.

1.2.34 Provide all piping from the reboiler to the all remote connectors (i.e PUREX, Grayloc, etc..). Seller is responsible to qualify the recirculation piping. However, Buyer is responsible to qualify reboiler steam line and all other reboiler small bore piping/jumpers.

1.2.35 Provide external spray ring piping for separator vessel demister pads. The Buyer is responsible to qualify separator vessel external spray ring piping.

1.2.36 Assume complete responsibility for the design, fabrication, testing, inspection, and documentation detailed in the purchase order. Responsibility includes process design of the vessel/equipment for performance and capacity.

1.2.37 Identify any necessary changes to the MDS, Drawings, specifications and purchase order and obtain approval from the Buyer.

1.2.38 Identify any conflicts between this specification and other drawings or specifications in purchase order or Seller's documentation and request an interpretation from the Buyer prior to proceeding with the work. Use the RFI or SDDR process as appropriate.

1.2.39 Buyer's review of the Seller's documentation (G-321E and G-321V document submittals) or release of the vessel/equipment/components for shipment by the Buyer's representative, shall in no way relieve the Seller of the responsibility for complying with all the requirements of this specification and the purchase order.

1.2.40 Ensure equipment environmental qualification for all Q-components as specified in equipment MDS.

1.2.41 Provide all Staubli connectors and provide a Certified Material Test Report (CMTR) for each Staubli connector component less the shrink tubing.

1.2.42 Responsible to coordinate with the Buyer to finalize all reboiler nozzle locations. See Appendix V for preliminary reboiler nozzle locations.

1.3 Work by Others

Any item not specifically listed as being supplied by the Buyer shall be provided by the Seller.

1.3.1 Provide installation labor.

1.3.2 Provide equipment shipment, unloading and storage at Buyer's site.

1.3.3 Provide Instrumentation and controls (including installation). Provide Buyer internal standards for digital control system equipment and will specify and procure the control system equipment based on the necessary I/O requirements detailed by Seller.

1.3.4 Instrument location information for instrument location drawings.

1.3.5 Generate control logic in Buyer standard format using the final control loop definitions, system interlocks and alarms, system control philosophies, and control and sequencing requirements provided by Seller.

1.3.6 Procure the digital control system components. Buyer will provide the "Device" and "I/O" address of the serial communications link for each instrument for inclusion in the Instrument Index.

1.3.7 Perform the inspection of dimensional measurement activities for separator vessels, reboilers, and recirculation pumps.

1.3.8 Perform remote handling verification test for reboilers and support frame assemblies, recirculation pumps, and recirculation pipework jumper functionality at Buyer site. Lift tests shall be performed per Section 3.19.8 by Seller prior to shipment.

1.3.9 Provide the appropriate seismic response spectra and damping values for Seller to perform the evaporator equipment skid (including reboiler and support frame assemblies) seismic analyses.

1.3.10 Provide video/camera systems for the Seller's provided demister pad removal systems.

1.3.11 Provide heat tracing, seismic review, and any necessary uninterruptible power supplies.

1.3.12 Provide all the piping, instrumentation and controls for the antifoam systems per Seller design and specification.

1.3.13 Provide all valves (including control valves) located in the jumpers for remote maintenance in the R5/C5 hot cell.

1.3.14 Provide the recirculation pipework. This includes the piping connecting the separator vessel to the recirculation pump, the recirculation pump to the reboiler **jumper connection,** and the reboiler **jumper connection** to the separator vessel for two FEP evaporator systems and the TLP evaporator system. **Buyer will also provide design and fabrication of Grayloc connectors. However, Seller will be responsible for qualification of the recirculation pipework.**

1.3.15 Provide structural supports per Seller's structural support requirements for three recirculation pumps (FEP-PMP-00009A/B and TLP-PMP-00001) and recirculation piping/jumpers.

1.3.16 Provide **rigid (>33hz)** hot cell **concrete-filled steel frame** for all reboiler and support frame assemblies and recirculation pumps.

1.3.17 Provide the necessary cyclic data for Seller to perform an assessment regarding the fatigue life of the equipment. However, Seller will be responsible for confirmation that the cyclic data has been accurately interpreted before proceeding with the component fatigue analysis.

1.3.18 Provide remote handling verification test for recirculation pumps and recirculation pipework jumper functionality.

1.3.19 Provide all jumpers, jumper mounted equipment, and pipework connections to the separator vessel (excluding the separator offgas pipework) within the black cell.

1.3.20 Provide all pipework between Seller's provided skids (excluding the evaporator separator offgas pipework and piping connecting condenser skids and steam ejectors).

1.3.21 Provide specification of process and utility piping jumper interfaces and their locations.

1.3.22 Provide Jumper stack-up tolerance study.

1.3.23 Provide shielding for penetrations through the walls and floors.

1.3.24 Provide hot cell remote handling equipment (including impact wrenches and standard lifting equipment).

1.3.25 Provide specification for antifoam reagents.

1.3.26 Provide feed vessels (FEP-VSL-00017A/B and TLP-VSL-00009A/B).

1.3.27 Provide concentrate receipt vessels (UFP-VSL-00001A/B and TCP-VSL-00001).

1.3.28 Provide Vessel Vent system.

1.3.29 Deleted

1.3.30 Provide FEP feed pumps (FEP-PMP-00007A/B) and concentrate pumps (FEP-PMP-00008A/B) (refer to 1.2.7).

1.3.31 Provide utility (i.e., air, steam, cooling water) supply systems. However, Seller is responsible to provide steam **conditioning components and desuperheater vessels** for reboiler operation.

1.3.32 Interface drawings for evaporator equipment skids.

1.3.33 **Qualify reboiler small bore piping/jumpers (NPS 4-inch or less).**

1.3.34 **Qualify separator vessel external spray ring piping.**

1.4 Definitions

1.4.1 *Skid:* A skid is a group of components that can be manufactured and installed as a unit. These skid units are structurally self-supporting, allowing the skid to be handled by crane. Whenever practical, skids will contain all the equipment associated with the process, including vessels, piping, and supports.

1.4.2 *ALARA:* As Low As Reasonably Achievable (ALARA) documentation requirements apply to systems, structures, and components (SSCs) that have the potential to affect radiation doses, contamination levels, or releases to the environment.

1.4.3 *Buyer's Representative(s)*: The Buyer's designee(s), who shall witness onsite operations at the Seller and sub-seller sites and perform onsite inspections and surveillances.

1.4.4 *Black Cell (R5/C5)*: is a sealed concrete structure containing very high radiation and contamination where human access is prohibited during the normal operating lifetime of the cell and maintenance is not performed in the cell.

1.4.5 *C1:* Uncontrolled Area.

1.4.6 C2: Controlled area. Personnel must be verified free of contamination prior to exit.

1.4.7 *C3:* Contamination classification for plant areas that are ordinarily free of contamination, but have the potential of being contaminated.

1.4.8 *C5:* Contamination classification for plant areas that are considered high contamination areas. Access to C5 areas is not permitted.

1.4.9 *Design Basis Earthquake (DBE):* A specification of the ground motion at the site.

1.4.10 *Hot Cell (R5/C5):* A room that is restricted from personnel due to high radiation. A hot cell is constructed with thick concrete walls usually lined internally with stainless steel sheet. Process equipment located in the hot cell is connected to wall nozzles using jumpers. Process equipment in the hot cell is skid mounted

and designed for either remote maintenance using crane-mounted services or, preferably, no maintenance over the 40 year design life of the WTP.

1.4.11 *Important to Safety (ITS):* SSCs that serve to provide reasonable assurance that the facility can be operated without undue risk to the health and safety of the workers and the public. ITS encompasses the broad class of facility features addressed (not necessarily explicitly) in the top-level radiological, nuclear, and process safety standards and principles that contribute to the safe operation and protection of workers and the public during all phases and aspects of facility operations (i.e., normal operation as well as accident mitigation). ITS includes SSCs designated as Safety Class (SC), Safety Significant (SS), and additional protection class (APC).

1.4.12 *Jumper:* A remotely removable section of pipework usually incorporating connector heads and some items of process equipment (i.e., valves, instruments, etc.).

1.4.13 *Commercial Material (CM)*: **SSC** items and associated services (those that are not designated as **Safety Class** or **Safety Significant**) that are manufactured using standard commercial practices.

1.4.14 *Paragraph*: When a paragraph of this specification, referenced documents, referenced codes, or referenced standards is referenced in this specification, the paragraph referenced and all subparagraphs and sub-subparagraphs of the paragraph referenced shall be considered inclusive.

1.4.15 *Quality (Q):* **Safety Class** and **Safety Significant** items. NQA-1 (1989) compliance is required.

1.4.16 *Deleted*

1.4.17 *Rad*: A unit of energy absorbed from ionizing radiation, equal to 100 ergs per gram or 0.01 joules per kilogram of irradiated material.

1.4.18 *Additional Protection Class*: APC are ITS SSCs that are neither **Safety Class** nor **Safety Significant**.

1.4.19 *R1*: Unrestricted area.

1.4.20 *R2*: Radiation controlled area.

1.4.21 *R3:* Radiation classification for plant areas considered average. Contamination area requiring anti-contamination clothing for entry. At early design stages, when insufficient information is available regarding worker occupancy, an initial target radiation level of 2.5 mRad/hr is to be used for the R3 classification.

1.4.22 *R4:* Radiation area (maximum).

1.4.23 *R5:* Radiation classification for areas considered to be high or very high radiation areas.

1.4.24 Reboiler and support frame assembly: Reboiler and pipe work up to and including PUREX nozzles, remote clamp connector hubs, and all permanently attached frame work.

1.4.25 *Safety Class:* SSCs that, by performing their specified safety function, prevent workers or the maximally exposed member of the public from receiving a radiological exposure that exceeds the accident exposure standards defined in the Safety Requirements Document (SRD). **Safety Class** also applies to those features that, by functioning, prevent the worker or maximally exposed member of the public from receiving a chemical exposure that exceeds the ERPG-2 (AIHA 1988) chemical release standard. Those features credited for the prevention of a criticality event are also designated as **Safety Class**.

1.4.26 *Safety Significant (SS)*: SSCs needed to achieve compliance with the radiological or chemical exposure standards for the public and workers during normal operation; and **SSCs** that can, if they fail or malfunction, place frequent demands on or adversely affect the function of **Safety Class** SSCs.

1.4.27 *Seismic Category I (SC-I):* Equipment/tanks important to safety, which have a seismic safety function. For the design of Seismic Category I equipment/tanks, no credit for inelastic energy absorption is allowed. Seismic Category I equipment/tanks shall be functional during and after a Design Basis Earthquake (DBE).

1.4.28 *Seismic Category II (SC-II):* Equipment/tanks important to safety whose failure during a seismic event could prevent a Seismic Category I structure, system, or component (SSC) from performing its seismic safety function. For the design of Seismic Category II equipment/tanks, credit for inelastic energy absorption is allowed. Seismic Category II equipment/tanks shall maintain control and confinement of hazardous materials during and after a Design Basis Earthquake (DBE), but do not need to be functional.

1.4.29 *Seismic Category III Equipment (SC-III):* (a) **Safety Class** and **Safety Significant** SSCs that do not have a natural phenomena hazard (NPH) safety function. (b) **SSCs** that have a seismic safety function solely because they protect workers and members of the public from exposure to chemical hazards. (c) APC SSCs that provide primary confinement of significant inventories of radioactive materials, but in amounts less than quantities that require an **Safety Class** or **Safety Significant** designation.

1.4.30 *Seismic Category IV (SC-IV)*: APC SSCs that have been designated as APC do not provide primary confinement of significant inventories of radioactive materials.

1.4.31 *Special Tools:* Any tooling which is not commercially available required to perform maintenance on the evaporator system.

1.4.32 *Acronyms*

- AISC American Institute of Steel Construction
- ALARA As Low As Reasonably Achievable

- ANSI American National Standards Institute
- APC Additional Protection Class
- ASD Adjustable Speed Drive
-
- ASME American Society of Mechanical Engineers
- ASNT American Society of Nondestructive Testing
- ASTM American Society for Testing and Materials
- AWS American Welding Society
- CFR Code of Federal Regulations
- CM Commercial grade
- DBE Design Basis Earthquake
- DOE US Department of Energy
- DOT Department of Transportation
- **EQD** **Equipment Qualification Datasheet**
- FEA Finite Element Analysis
- FEP Waste Feed Evaporator Process System
- GPM Gallons per minute
- ITS Important to Safety
- LAW Low-Activity Waste
- M Molarity
- MDS Material Data Sheet
- MR Material Requisition
- MSDS Material Safety Data Sheet
- NDE Nondestructive Evaluation/Examination
- NPS Nominal Pipe Size
- NQA Nuclear Quality Assurance
- OBE Operating Basis Earthquake
- ORP DOE Office of River Protection
- PEP Process Equipment Platform
- PMI Positive Material Identification
- PTF Pretreatment Facility
- **PTFE** **Polytetrafluoroethylene**
- P&ID Piping and Instrumentation Diagram
- QA Quality Assurance
- QAP Quality Assurance Program
- QAM Quality Assurance Manual
- Q Quality Level
- **RFI** **Request for Information**
- RPP-WTP River Protection Project-Waste Treatment Plant
- SBS Submerged Bed Scrubber
-
-
- SC Seismic Category
- SDDR Supplier Deviation Disposition Request
- SG Specific Gravity
- SS Safety Significant
- SSCs Structures, Systems, and Components
- SSPC The Society for Protective Coating

- TID Total Integrated Dose
- TLP Treated LAW Evaporator Process System
- UBC Uniform Building Code
- WT % Weight percent
- WTP Hanford Tank Waste Treatment and Immobilization Plant

1.5 Mechanical Data Sheets

Specific design parameters and **equipment qualification** requirements for evaporator components will be shown on the individual Mechanical Data Sheet (MDS) **or Equipment Qualification Datasheet (EQD)** in Section 2 of the MR. Seller shall verify thermal, hydraulic, mechanical and process designs. Where necessary, the Seller shall change the data in order to furnish complete thermal, hydraulic, mechanical, and process guarantees. Any difference between Seller's final design and Buyer's **data specified in MDS or EQD** shall be **identified to the Buyer** for resolution and approval. Seller shall supply **and qualify** evaporator components that meet specified materials of construction, quality level, and seismic category as described on the MDS. The nominal feed chemistries used for the design should be based on Appendix A and B of this specification. Process design of the evaporator system is given in Appendix D of this specification.

1.6 Safety/Quality/Seismic Classifications

1.6.1 The quality level (Q) and seismic category (SC) of the major components of the evaporator system are specified on the data sheets in Section 2 of the MR and Appendix E of this specification.

1.6.2 Seismic category (SC) classification requirements are specified in 24590-WTP-3PS-SS90-T0001, Specification for Seismic Qualification of Seismic Category I/II Equipment and Tanks and 24590-WTP-3PS-FB01-T0001, Specification for Seismic Qualification for Seismic Category III/IV Equipment and Tanks.

2 Applicable Documents

2.1 General

2.1.1 Work shall be done in accordance with the referenced codes, standards, and documents listed below, which are an integral part of this specification.

2.1.2 When specific chapters, sections, parts, or paragraphs are listed following a code, industry standard, or reference document, only those chapters, sections, parts, or paragraphs of the document are applicable and shall be applied. If a date or revision is not listed, the latest issue, including addenda, at the time of award shall apply. Pre-approved acceptable alternate editions are listed in Section 4.2.12. For codes and standards listed below, the specific revision or effective date of codes and standards that they incorporate by reference (daughter codes and standards), shall be followed. When more than one code, standard, or referenced document covers the same topic, the requirements for all must be met with the most stringent governing. For commercial grade quality items, Seller may use any year of the ASME or ASTM standards for materials.

2.2 Codes and Industry Standards

2.2.1 ASME B31.3-1996, Process Piping

2.2.2 ASME B16.5-1988, Pipe Flanges and Flanged Fittings NPS 1/2 Through NPS 24 Addend A

2.2.3 ASME B16.47-1990, Large Diameter Steel Flanges NPS 26 through NPS 60 Addenda A

2.2.4 ASME B18.15-1985, Forged Eye Bolts

2.2.5 ASME Boiler and Pressure Vessel Code, Section VIII, Div. 1, Rules for Construction of Pressure Vessel

2.2.6 ASME Boiler and Pressure Vessel Code, Section IX , Welding and Brazing Qualifications

2.2.7 ASME NQA-1-1989, Quality Assurance Program Requirements for Nuclear Facility Applications

2.2.8 ASME Y14.100, Engineering Drawing Practices

2.2.9 AISC ASD, 9th Edition, Manual of Steel Construction, Allowable Stress Design

2.2.10 AISC N690-1994, Specification for the Design, Fabrication, and Erection of Steel Safety-Related Structures for Nuclear Facilities

2.2.11 ANSI N14.6, **Specification f**or Radioactive Materials-Special Lifting Devices for Shipping Containers Weighing 10,000 Pounds (4500 kg) or More

2.2.12 ASTM F593, Standard Specification for Stainless Steel Bolts, Hex Cap Screws, and Studs

2.2.13 ASTM F594, Standard Specification for Stainless Steel Nuts

2.2.14 AWS D1.6, Structural Welding Code-Stainless Steel

2.2.15 AWS D9.1, Sheet Metal Welding Code

2.2.16 IEEE Std 1023-1988, IEEE Guide for the Application of Human Factors Engineering to Systems, Equipment, and Facilities of Nuclear Power Generating Stations

2.2.17 MIL-STD-1629A, Military Standard, Procedures for Performing A Failure Mode, Effects and Criticality Analysis

2.2.18 UBC-1997, Uniform Building Code

2.2.19 10 CFR 835, Occupational Radiation Protection

2.2.20 49 CFR 173, General Requirements for Shipments and Packaging. Code of Federal Regulations. U.S. Department of Transportation, Washington, D.C.

2.2.21 29 CFR 1910, Occupational Safety and Health Standards

2.2.22 NFPA 101, Code for Safety to Life from Fire in Buildings and Structures

2.2.23 NFPA 70 -1999, National Electric Code

2.2.24 SSPC-SP10, Near White Metal Blast Cleaning

2.2.25 SSPC-SP11, Power Tool Cleaning to Bare Metal

2.2.26 WAC 296-24, General Safety and Health Standards

2.2.27 **FED STD** 595, Colors Used in Government Procurement

2.2.28 **ASTM** E 709, Standard Test Method for Magnetic Particle Examination

2.2.29 ASCE 4-98, Seismic Analysis of Safety-Related Nuclear Structures and Commentary.

2.2.30 ASTM A193 Editions 1991 through 2005 Standard Specification for Alloy-Steel and Stainless Steel Bolting Materials for High-Temperature Service

2.2.31 ASTM A194 Edition 1991 through 2005a, Standard Specification for Carbon and Alloy Steel Nuts for Bolts for High Pressure or High Temperature Service

2.2.32 ASTM A582, Standard Specification for Free-Machining Stainless and Heat-Resisting Steel Bars, Hot-Rolled and Cold Finished.

2.2.33 ASTM A564 Editions 1988b, 1989, 1991, 1992, 1992a, 1994, 1995, 1997, 1999, 2001, 2002, 2002a, 2004, Standard Specification for Hot Rolled and Cold-Finished Age-Hardening Stainless Steel Bars and Shapes

2.2.34 **Deleted.**

2.2.35 **Deleted.**

2.2.36 API 610-1995 Centrifugal Pumps for General Refinery Service

2.3 Reference Documents

2.3.1 Interfacing References

2.3.1.1 24590-WTP-3PS-G000-T0001,General Specification for Supplier Quality Assurance Program Requirements

2.3.1.2 24590-WTP-3PS-G000-T0002, Specification for Positive Material Identification (PMI)

2.3.1.3	24590-WTP-3PS-G000-T0003, General Specification for Packaging, Shipping, Handling, and Storage Requirements
2.3.1.4	24590-WTP-3PS-NWP0-T0001, Engineering Specification for General Welding and NDE Requirements for Supplier Fabricated Piping
2.3.1.5	24590-WTP-3PS-P000-T0001, Engineering Specification for Piping Material Classes General Description and Summary
2.3.1.6	24590-WTP-3PS-SS00-T0002, Engineering Specification for Welding of Structural Stainless Steel and Welding of Structural Carbon Steel to Structural Stainless Steel
2.3.1.7	24590-WTP-3PS-SS90-T0001, Specification for Seismic Qualification of Seismic Category I/II Equipment and Tanks
2.3.1.8	24590-WTP-3PS-FB01-T0001, Engineering Specification for Structural Design Loads for Seismic Category III & IV Equipment and Tanks
2.3.1.9	24590-WTP-3PS-EVV1-T0001, Specification for Low Voltage Adjustable Speed Drives
2.3.1.10	24590-WTP-3PS-MUMI-T0002, Specification for Low Voltage Induction Motors
2.3.1.11	24590-WTP-3PS-MPC0-T0002, Engineering Specification for General Centrifugal Pumps to Meet Requirements of ASME B73.1M-1991 and ASME B73.2M-1991 for Commercial (CM) Components
2.3.1.12	24590-WTP-3PS-M000-T0002, General Specification for Mechanical Handling Equipment Design and Manufacture
2.3.1.13	24590-WTP-3PS-MJJ0-T0001, Engineering Specification for Lifting Beams for Mechanical Handling Equipment Important to Safety Quality Level II
2.3.1.14	24590-WTP-3PS-MV00-T0001, Engineering Specification for Pressure Vessel Design and Fabrication
2.3.1.15	24590-WTP-3PS-MV00-T0002, Engineering Specification for Seismic Qualification Criteria for Pressure Vessels
2.3.1.16	24590-WTP-3PS-MES0-T0001, Engineering Specification for Shell and Tube Heat Exchangers
2.3.1.17	24590-WTP-3PS-MVB2-T0001, Engineering Specification for Welding of Pressure Vessels, Heat Exchangers, and Boilers

2.3.1.18 24590-WTP-3PS-JQ07-T0001, Engineering Specification for Instrumentation for Package Systems

2.3.1.19 24590-WTP-3PS-PS02-T0001, Engineering Specification for Shop Fabrication of Piping

2.3.1.20 24590-WTP-3PS-SS00-T0001, Engineering Specification for Welding of Carbon Structural Steel.

2.3.1.21 24590-WTP-3PS-EKP0-T0001, Engineering Specification for Electrical Requirements for Packaged Equipment

2.3.1.22 24590-WTP-3PS-PP00-T0002, Engineering Specification for Dimensional Record Program.

2.3.1.23 **24590-WTP-3PS-PF00-T0008, Engineering Specification for Pneumatic/Process Connectors (Non-ITS)**

2.3.1.24 24590-WTP-3PS-FA02-T0003, Engineering Specification for Design of Post Installed Concrete Anchors for Non-Important to Safety (Non-ITS) Applications

2.3.1.25 **24590-WTP-3PS-FA02-T0005, Engineering Specification for Design of Post Installed Concrete Anchors for Q Applications**

2.3.1.26 **24590-WTP-3PS-FA02-T0004, Engineering Specification for Installation and Testing of Post Installed Concrete Anchors and Drilling/Coring of Concrete**

2.3.1.27 24590-WTP-3PS-G000-T0014, Engineering Specification for Supplier Design Analyses

2.3.1.28 24590-WTP-3PS-JQ06-T0005, Engineering Specification for Environmental Qualification of Control and Electrical Systems and Components

2.3.1.29 24590-WTP-3PS-G000-T0015, Engineering Specification for Environmental Qualification of Mechanical Equipment

2.3.1.30 24590-WTP-DC-PS-01-001, Pipe Stress Design Criteria including "Pipe Stress Criteria" and "Span Method Criteria"

2.3.2 Developmental References

2.3.2.1 24590-PTF-3YD-FEP-00001, System Description for Waste Feed Evaporation Process (FEP)

2.3.2.2 24590-PTF-3YD-TLP-00001, System Description for Treated LAW Evaporation Process (TLP)

2.3.2.3 24590-WTP-3PS-MV00-T0003, Engineering Specification for Pressure Vessel Fatigue Analysis

2.4 Reference Drawings / Data Sheets

2.4.1 24590-WTP-MV-M59T-00001, Pressure Vessel Tolerances Standard Details

2.4.2 24590-WTP-MV-M59T-00007, Thermowell Connection Standard Details

2.4.3 24590-WTP-MV-M59T-00009, Lifting Lugs Standard Details

2.4.4 24590-WTP-MV-M59T-00010, Tailing Lug Standard Details

2.4.5 24590-WTP-MV-M59T-00011, Wash Rings Standard Details

2.4.6 24590-WTP-MV-M59T-00012, Grounding Lug Standard Details

2.4.7 24590-WTP-MV-M59T-00016001, Vessel Connections Standard Details Sheet 1 of 3

2.4.8 24590-WTP-MV-M59T-00016002, Vessel Connections Standard Details Sheet 2 of 3

2.4.9 24590-WTP-MV-M59T-00016003, Vessel Connections Standard Details Sheet 3 of 3

2.4.10 24590-WTP-MV-M59T-00017, Vessel Inspection Manway Standard Details

2.4.11 24590-WTP-MV-M59T-00018, Vessel Name Plate Standard Details

2.4.12 24590-WTP-MV-M59T-00026, Anchor Bolt Chair Details for Vertical Vessels

2.4.13 24590-WTP-M0-M10T-00004, HLW & PTF Vitrification Systems HSH, RWH, PFH, PIH Design Proposal Drawing 3 Ton Capacity Lifting Hook

2.4.14 24590-WTP-M6-50-00001, P&ID Symbols and Legend Sheet 1 of **8**

2.4.15 24590-WTP -M6-50-00002, P&ID Symbols and Legend Sheet 2 of **8**

2.4.16 24590-WTP -M6-50-00003, P&ID Symbols and Legend Sheet 3 of **8**

2.4.17 24590-WTP -M6-50-00004, P&ID Symbols and Legend Sheet 4 of **8**

2.4.18 24590-WTP -M6-50-00005, P&ID Symbols and Legend Sheet 5 of **8**

2.4.19 24590-WTP -M6-50-00006, P&ID Symbols and Legend Sheet 6 of **8**

2.4.20 24590-PTF-P1-P01T-00001, Pretreatment Building General Arrangement Plan at El. 0'-0"

2.4.21 24590-PTF-P1-P01T-00002, Pretreatment Building General Arrangement Plan at El. 28'-0"

2.4.22 24590-PTF-P1-P01T-00007, Pretreatment Building General Arrangement Section A-A

2.4.23 24590-PTF-P1-P01T-00008, Pretreatment Building General Arrangement Section B-B

2.4.24 24590-PTF-P1-P01T-00009, Pretreatment Building General Arrangement Section C-C

2.4.25 24590-PTF-P1-P01T-00010, Pretreatment Building General Arrangement Section D-D

2.4.26 24590-PTF-P1-P01T-00011, Pretreatment Building General Arrangement Section E-E

2.4.27 24590-PTF-P1-P01T-00012, Pretreatment Building General Arrangement Sect. F-F and Sect. G-G

2.4.28 24590-PTF-P1-P01T-00013, Pretreatment Building General Arrangement Sect. H-H and Sect. J-J

2.4.29 24590-PTF-P1-P01T-00014, Pretreatment Building General Arrangement Sect. K-K and Sect. L-L

2.4.30 24590-PTF-P1-P01T-00015, Pretreatment Building General Arrangement Sect. M-M and Sect. N-N

2.4.31 24590-PTF-P1-P01T-00016, Pretreatment Building General Arrangement Sect. P-P and Sect. Q-Q

2.4.32 24590-PTF-P1-P01T-00017, Pretreatment Building General Arrangement Sect. R-R

2.4.33 24590-PTF-DD-S13T-00022, Pretreatment Facility Structural Concrete Embedments Key Plan Elevation 0 ft – 0 in

2.4.34 24590-PTF-DD-S13T-00023, Pretreatment Facility Structural Concrete Embedments Key Plan Elevation 0 ft – 0 in Sh 1

2.4.35 24590-PTF-DD-S13T-00025, Pretreatment Facility Structural Concrete Embedments Plan El 0 ft – 0 in Sh 3

2.4.36 24590-PTF-DD-S13T-00026, Pretreatment Facility Structural Concrete Embedments Plan El 0 ft – 0 in Sh 4

2.4.37 24590-PTF-DD-S13T-00027, Pretreatment Facility Structural Concrete Embedments Plan Elevation 0 ft – 0 in Sh 5

2.4.38 24590-PTF-DD-S13T-00028, Pretreatment Facility Structural Concrete Embedments Plan Elevation 0 ft – 0 in Sh 6

2.4.39 224590-PTF-DD-S13T-00029, Pretreatment Facility Structural Concrete Embedments Plan El. 0'-0" Sh 7

2.4.40 24590-PTF-DD-S13T-00030, Pretreatment Facility Structural Concrete Embedments Plan El. 0'-0" Sh 8

2.4.41 24590-PTF-DD-S13T-00031, Pretreatment Facility Structural Concrete Embedments Plan El. 0'-0" Sh 9

2.4.42 24590-PTF-DD-S13T-00036, Pretreatment Facility Structural Concrete Embedments EL 0 ft – 0 in Vessels Sh 1

2.4.43 24590-PTF-DD-S13T-00039, Pretreatment Facility Structural Concrete Embedments EL 0 ft – 0 in Vessels Sh 2

2.4.44 24590-PTF-DD-S13T-00042, Pretreatment Facility Structural Concrete Embedment Details EL 0 ft – 0 in Vessels Sh 1

2.4.45 24590-PTF-DD-S13T-00043, Pretreatment Facility Structural Concrete Embedment Details EL 0 ft – 0 in Vessels Sh 2

2.4.46 24590-PTF-DD-S13T-00044, Pretreatment Facility Structural Concrete Embedment Details EL 0 ft – 0 in Vessels Sh 3

2.4.47 24590-PTF-DD-S13T-00047, Pretreatment Facility Structural Concrete Embedment EL 0 ft – 0 in Misc Sh1

2.4.48 24590-PTF-DD-S13T-00049, Pretreatment Facility Structural Concrete Embedment EL 0 ft – 0 in Misc Sh 3

2.4.49 24590-PTF-MJD-PIH-00001, Mechanical Handling Data Sheet for Overhead Mast Power Manipulator

2.4.50 24590-PTF-M0-PIH-00008, Pretreatment System PIH Design Proposal Drawing 30 Ton Capacity Lifting Hook

2.4.51 24590-WTP-M61-P23T-00056, WTP Details Lower Holder Bottom Outlet Electrical Connector 2"

2.4.52 24590-PTF-SS-S15T-00311, Pretreatment Facility Structural Misc Support Steel El. 0'-0" Plan Sh 1

2.4.53 24590-PTF-SS-S15T-00312, Pretreatment Facility Structural Misc Support Steel El. 0'-0" Plan Sh 2

2.4.54 24590-PTF-SS-S15T-00313, Pretreatment Facility Structural Misc Support Steel El. 0'-0" Plan Sh 3

2.4.55 24590-PTF-SS-S15T-00314, Pretreatment Facility Structural Misc Support Steel El. 0'-0" Plan Sh 4

2.4.56 24590-PTF-SS-S15T-00315, Pretreatment Facility Structural Misc Support Steel El. 0'-0" Plan Sh 5

2.4.57 24590-PTF-SS-S15T-00316, Pretreatment Facility Structural Misc Support Steel El. 0'-0" Plan Sh 6

2.4.58 24590-PTF-SS-S15T-00317, Pretreatment Facility Structural Misc Support Steel El. 0'-0" Plan Sh 7

2.4.59 24590-PTF-SS-S15T-00318, Pretreatment Facility Structural Misc Support Steel El. 0'-0" Plan Sh 8

2.4.60 24590-PTF-SS-S15T-00352, Pretreatment Facility Structural Misc Support Steel Details Sh 3

2.4.61 24590-PTF-SS-S15T-00354, Pretreatment Facility Structural Misc Support Steel Details Sh 5

2.4.62 24590-WTP-M61-P23T-00056, WTP Details Lower Holder Bottom Outlet Electrical Connector 2".

2.4.63 24590-WTP-M61-P23T-00057, WTP Assembly Lower Holder Electrical Connector 2 Inch.

2.4.64 24590-WTP-M61-P23T-00005, WTP Details - Nozzles PUREX Male Connector 1", 2", 3", 4"

2.4.65 24590-WTP-M61N-P23T-00006, Nozzles PUREX Connector 1", 2", 3", 4"

2.4.66 24590-WTP-M61-P23T-00040, WTP Details - Kickoff Plates PUREX Connector 1", 2", 3", 4"

2.4.67 24590-WTP-M61-P23T-00057, WTP Assembly Lower Holder Electrical Connector 2 Inch.

2.4.68 24590-WTP-P61-P27T-00001, WTP Standard Jumper Details

2.4.69 24590-PTF-M6-FEP-00001**001**, P&ID - PTF Waste Feed Evaporation Process System Evaporator Feed Vessel FEP-VSL-00017A.

2.4.70 24590-PTF-M6-FEP-00002**001**, P&ID - PTF Waste Feed Evaporation Process System Separator FEP-SEP-00001A.

2.4.71 24590-PTF-M6-FEP-00003**001**, P&ID - PTF Waste Feed Evaporation Process System Condensate Collection FEP-VSL-00005.

2.4.72 24590-PTF-M6-FEP-00004**001**, P&ID - PTF Waste Feed Evaporation Process System Separator FEP-SEP-00001B.

2.4.73 24590-PTF-M6-FEP-00005**001**, P&ID - PTF Waste Feed Evaporation Process System Condensers **FEP-COND-00001B/2B/3B.**

2.4.74 24590-PTF-M6-TLP-00001, P&ID - PTF Treated LAW Evaporation Process System LAW SBS Condensate Receipt TLP-VSL-00009A & 9B.

2.4.75 24590-PTF-M6-TLP-00002, P&ID - PTF Treated LAW Evaporation Process System Condensate Collection TLP-VSL-00002.

2.4.76 24590-PTF-M6-TLP-00003, P&ID - PTF Treated LAW Evaporation Process System Separator TLP-SEP-00001.

2.4.77 24590-PTF-M6-STR-00001, P&ID - PTF Strontium Nitrate, Sodium Permanganate, and Anti-foam Reagent Distribution (CM).

2.4.78 **24590-PTF-DD-S13T-00045, Pretreatment Facility Structural Concrete Embedment Details Vessel Support Ring Beam Installation**

2.4.79 **24590-PTF-DB-S13T-00048, Pretreatment Facility Structural Concrete Embedments Partial Plan EL 56'0" - SH 3**

2.4.80 **24590-PTF-DB-S13T-00050, Pretreatment Facility Structural Concrete Embedments Partial Plan EL 56'0" - SH 5**

2.4.81 **24590-PTF-DB-S13T-00051, Pretreatment Facility Structural Concrete Embedments Partial Plan EL 56'0" - SH 6**

2.4.82 **24590-PTF-DB-S13T-00159, Pretreatment Facility Structural Concrete Walls, Section DN - SH 3**

2.4.83 **24590-PTF-DB-S13T-00165, Pretreatment Facility Structural Concrete Walls, Section EN - SH 1**

2.4.84 **24590-PTF-DB-S13T-00166, Pretreatment Facility Structural Concrete Walls, Section EN - SH 2**

2.4.85 **24590-PTF-DB-S13T-00171, Pretreatment Facility Structural Concrete Walls, Section ES - SH 3**

2.4.86 **24590-PTF-DB-S13T-00172, Pretreatment Facility Structural Concrete Walls, Section ES - SH 4**

2.4.87 **24590-PTF-DB-S13T-00205, Pretreatment Facility Structural Concrete Walls, Layout Details SH 5**

2.4.88 **24590-PTF-DB-S13T-00214, Pretreatment Facility Structural Concrete Walls, Layout Details SH 14**

2.4.89 **24590-PTF-DB-S13T-00227, Pretreatment Facility Structural Concrete Walls, Layout Details SH 27**

2.4.90 **24590-PTF-SS-S15T-00034, Pretreatment Facility Structural Steel Framing Floor Plan EL 56'-0" SH 3**

2.4.91 **24590-PTF-SS-S15T-00037, Pretreatment Facility Structural Steel Framing Floor Plan EL 56'-0" SH 6**

2.4.92 **24590-WTP-MV-M59T-00002, Tank Insulation Standard Details**

2.4.93 24590-WTP-MV-M59T-00003, Tie Down Swivel Lug Mounting Studs Standard Details

2.4.94 24590-WTP-M6-50-00007, P&ID Symbols and Legend Sheet 7 of 8

2.4.95 24590-WTP-M6-50-00008, P&ID Symbols and Legend Sheet 8 of 8

2.4.96 24590-PTF-M6-FEP-00001002, P&ID - PTF Waste Feed Evaporation Process System Evaporator Feed Vessel FEP-VSL-00017B.

2.4.97 24590-PTF-M6-FEP-00002002, P&ID - PTF Waste Feed Evaporation Process System Reboiler FEP-RBLR-00001A.

2.4.98 24590-PTF-M6-FEP-00002003, P&ID - PTF Waste Feed Evaporation Process System Pump FEP-PMP-00008A.

2.4.99 24590-PTF-M6-FEP-00003002, P&ID - PTF Waste Feed Evaporation Process System Condensers FEP-COND-00001A/2A/3A.

2.4.100 24590-PTF-M6-FEP-00004002, P&ID - PTF Waste Feed Evaporation Process System Reboiler FEP-RBLR-00001B.

2.4.101 24590-PTF-M6-FEP-00004003, P&ID - PTF Waste Feed Evaporation Process System Pump FEP-PMP-00008B.

2.4.102 24590-PTF-M6-FEP-00010001, P&ID - PTF Waste Feed Evaporation Process System Reboiler Condensate Collection and Transfer.

2.4.103 24590-PTF-M6-FEP-00010002, P&ID - PTF Waste Feed Evaporation Process System Reboiler Condensate Collection and Transfer.

2.4.104 24590-PTF-M6-TLP-00009, P&ID - PTF Treated LAW Feed Evaporation Process System Reboiler Condensate and Collection

2.4.105 24590-PTF-JFQ-FEP-00001, Equipment Qualification Datasheet for FEP Vortex / Swirl Meter FEP-TF-0201

2.4.106 24590-PTF-JFQ-FEP-00002, Equipment Qualification Datasheet for FEP Vortex / Swirl Meter FEP-TF-0401

2.4.107 24590-PTF-JVQ-FEP-00001, Equipment Qualification Datasheet for FEP Pressure Control Valve FEP-PV-0267

2.4.108 24590-PTF-JVQ-FEP-00002, Equipment Qualification Datasheet for FEP Pressure Control Valve FEP-PV-0467

2.4.109 24590-PTF-JFQ-TLP-00001, Equipment Qualification Datasheet for TLP Vortex / Swirl Meter TLP-TF-0301

2.4.110 24590-PTF-JVQ-TLP-00001, Equipment Qualification Datasheet for TLP Pressure Control Valve TLP-PV-0355

2.5 Design Changes Incorporated by Design

- 24590-WTP-SDDR-PROC-04-00104
- 24590-WTP-SDDR-PROC-04-01194
- 24590-WTP-SDDR-PROC-05-00181
- 24590-WTP-SDDR-PROC-05-00208
- 24590-WTP-SDDR-M-05-00438
- 24590-WTP-SDDR-MS-07-00029

2.6 Design Changes Incorporated by Reference

- 24590-WTP-SDDR-PROC-04-00994
- 24590-WTP-SDDR-PROC-04-00995
- 24590-WTP-SDDR-PROC-04-01193
- 24590-WTP-SDDR-PROC-04-01270
- 24590-WTP-SDDR-PROC-04-~~01271~~ 01271 ALG 23FEB09
- 24590-WTP-SDDR-PROC-04-01272
- 24590-WTP-SDDR-PROC-04-01273
- 24590-WTP-SDDR-PROC-05-00208
- 24590-WTP-SDDR-M-06-00395 } THESE TWO SDDRS ARE
- 24590-WTP-SDDR-MS-07-00030 } NEW TO REV. 3

ALG 23FEB09

3 Design Requirements

3.1 General

3.1.1 As Low As Reasonably Achievable (ALARA) principles shall be factored into the design and maintenance of the evaporator systems per 10 CFR 835, *Occupational Radiation Protection*.

3.1.2 Unless otherwise specified, the evaporator systems shall be designed and fabricated per applicable documents listed in Section 2.0 of this specification, and the data sheets in Section 2 of the MR. No changes, substitutions, or deviations shall be made without Buyer's concurrence.

3.1.3 The evaporator system design shall comply with the requirements stipulated in this specification. Seller shall conform with Buyer's requirements for hot cell wall penetrations, recirculation piping/jumper configuration, layout, dimension, location as shown in the Appendices I, J, and K. Seller shall confirm locations for all evaporator equipment are adequate for system functionality. Seller shall submit any variances to these requirements during design review stage for concurrence.

3.1.4 The evaporator piping and instrumentation sketches provided in the Appendix L of this specification illustrate the conceptual piping and instrument control of the evaporator systems. All evaporator systems or components shall have adequate control features to bring evaporator operations to a safe and stable 'shutdown' condition during an abnormal event. Seller's control design philosophy can

differ from Buyer's conceptual control; however, the Seller's control system design shall conform to Buyer's specification 24590-WTP-3PS-JQ07-T0001.

3.1.5 General Arrangement drawings should be used to convey approximate equipment locations for skids. Equipment locations shown in the Appendices I, J, and K shall be maintained unless the design dictates an alternate location.

3.1.6 The Seller shall be responsible for the evaporator system design including component specification such as design parameters, sizing, pipe support loads, pipe hangers, anchors, pipe slopes and environmental protection (temperature, humidity, etc.) as required.

3.1.7 A means shall be provided to avoid accumulation of settled solids (e.g., sparging or removal of separator contents) in event of recirculation pump failure.

3.1.8 All heat exchangers including reboilers and condensers shall comply with ASME Section VIII and TEMA standard, Class B. "Code Stamp" shall be provided for all Seller's provided heat exchangers.

3.1.9 Seller shall comply with nozzle loading requirements specified in Appendix V for SC-I and SC-II vessels/equipment.

3.1.10 Gusset plates cannot be utilized to accommodate the required nozzle loading on safety class vessels and heat exchangers.

3.1.11 **Except for flowmeters,** the equipment shall be designed such that personnel sound level exposure outside of R5/C5 area shall not exceed 85 dBA. Seller shall clearly state how the specified sound level limit will be met. **Noise level is not required for flowmeters since they will have the same noise as the piping system and should not amplify or attenuate that noise to a measurable level.**

3.1.12 All calculations, modeling, analyses, drawings, and documentation shall utilize U.S. customary units.

3.1.13 Design of the evaporator systems shall incorporate the latest and best proven technology, components, and materials for the required service conditions and performance.

3.1.14 The evaporator system model analysis, thermal analysis, design analysis, and seismic analysis shall be verified such that the final system, equipment and component design meet the requirements of this specification as well as its addenda and attachments.

3.1.15 Evaporator system equipment shall be furnished as discrete skid mounted units that are ready to integrate with the Buyer's structures, systems, and components.

3.1.16 The evaporator systems shall be identical in component count, capacity, and mode of operation and shall utilize common component types and equipment manufacturers.

3.1.17 The FEP and TLP Evaporator systems shall be designed in accordance with following feed conditions:

- Design FEP feed flow of 50 gpm
- Design TLP feed flow of 38 gpm
- Design feed temperature of 77 °F
- Waste feed pH of 11 – 14
- LAW SBS pH of 6.8

3.1.18 Normal design cooling water temperature of 75 °F with a peak summer maximum of 83 °F shall be used for designing/sizing all condensers. The cooling water temperature of 75 °F is valid for 85 % of the time through a year. During 15 % of the time when cooling water temperature is above 75 °F, the TLP evaporator system can be operated at a higher temperatures (i.e., 1.2 psia, 127 °F – 131 °F). This operating strategy is for short term operation and is to minimize cooling water flow.

3.1.19 Evaporator systems and components should be designed to prevent the migration of contamination into the utility / reagent systems.

3.1.20 Human factors and ergonomics shall be designed into all evaporator equipment requiring manual operations per IEEE Std 1023, *IEEE Guide for the Application of Human Factors Engineering to Systems, Equipment, and Facilities of Nuclear Power Generating Stations*.

3.1.21 Quality level, seismic category, materials of construction, design pressure, and design temperature shall be in accordance with the data sheets in Section 2 of the MR and Appendix E of this specification. If a change to the requirements for materials and/or the equipment types to be used during the execution of the contract is dictated because of design analyses, then the Seller is required to provide Buyer its recommendation for review and concurrence prior to incorporation into the design of the evaporator systems.

3.1.22 All equipment in evaporator systems requiring maintenance or removal shall have flushing and draining capability to facilitate decontamination. Design features shall minimize the need for decontamination by including sloping features, replacing sharp bends with gradual bends, etc. where practical, consistent with ALARA practices.

3.1.23 Provision for temperature instrumentation shall be jumper nozzles incorporating the required thermowell details.

3.1.24 Nozzle and flange alignment shall be within ± 0.5 degrees of design specifications.

3.1.25 Jumper nozzle connections shall be included in the evaporator systems to interface with the Buyer supplied jumpers. **Preliminary** location and details of the connections **should** be per Appendix **V**. **Final locations are to be coordinated with the Buyer.**

3.1.26 The reboiler support frame detail sketches provided in the Appendix **V** of this specification illustrate the conceptual design to support remoteability.

3.1.27 Seller's reboiler frame design shall not protrude into the crane path as specified in Appendix **V**.

3.1.28 The hub type (remote clamp) connectors and PUREX nozzles are the only government-furnished equipment, which will be sent to Seller for installation. Buyer will provide Seller hydro test blanks for the remote clamp connectors (Grayloc) and the remote PUREX and other connectors for installation on the reboilers. **Hydro test connections for axial flow pumps to be provided by Seller.**

3.1.29 Nozzles for reboiler and support frame assemblies are to be designed to maintain positional tolerance during operational loading conditions and maintain structural integrity during and after a DBE. Preliminary loading information for the nozzle loads **and support loads** on the reboilers are provided in Appendix **V.**

3.1.30 All adjustable speed drives for pumps can be designed for non-radiation environment.

3.1.31 Seller's fabrication drawings shall be used as the document of record for fabrication of the components. Seller's specification drawings are not required to be revised and maintained in total agreement with approved fabrication drawings.

3.1.32 Regarding Buyer's specification 24590-WTP-3PS-G000-T0003, *Engineering Specification for Packing, Handling, and Storage requirements,* the center of gravity and sling points are not needed for off-gas piping pieces and separator vessel support towers because they are awkward hollow parts that do not allow a meaningful center of gravity to be determined or designed. Multiple sling configurations are possible to affect a successful lift and should be at the discretion of site construction supervisor.

3.1.33 Seller shall provide evaporator systems in the skids for ease of transportation, installation, and replacement. Seller is responsible for equipment skid sizing and layout to fit Buyer's facility. For the baseline design, each evaporator system will comprise the following skids:

- Separator vessel skids
- Reboiler and support frame assemblies.
- TLP feed pumps skid
- TLP concentrate pumps skid
- **Condenser skid which includes primary condenser, inter-condenser, after-condenser, and steam ejectors**
- Process condensate skids which includes vessel and pump
- Antifoam skids which include vessel and pumps

3.1.34 **Seller shall perform equipment environmental qualification for all supplied Q-components in accordance with Buyer's specifications 24590-WTP-3PS-G000-T0015, *Engineering Specification for Environmental Qualification of***

Mechanical Equipment **and 24590-WTP-3PS-JQ06-T0005,** ***Engineering Specification for Environmental Qualification of Control and Electrical Systems and Components*****, as applicable. Equipment qualification environmental data is provided in individual MDS or EQD in Section 2 of the MR.**

3.1.35 Condenser skids shall be designed with cast-in-anchors.

3.1.36 Seller is permitted to apply the Inelastic Energy Absorption Coefficient in accordance guideline provided in attachment # 7, Appendix V of this specification regardless of actual fabrication dates.

3.1.37 Seller engineering analyses and calculations as supplier submittals shall be in accordance with Buyer's Specification 24590-WTP-3PS-G000-T0014, ***Engineering Specification for Supplier Design Analyses.***

3.2 Basic Function

The evaporator systems employ forced circulation and vacuum evaporation. The Waste Feed Process (FEP) evaporator system consists of two (2) identical evaporators which will be installed at the west end of the pretreatment facility (PTF). The Treated Low Activity Waste Process (TLP) evaporator system will be installed at the east end of the PTF.

Each evaporator will be designed to process 100 % of the design feed flow (50 gpm for each FEP system and 39 gpm for TLP system) with an evaporation feed rate of 30 gpm and to operate independent of each other. Normal operation of the FEP evaporator system consists of one evaporator operating at a time but simultaneous operation is possible. The FEP evaporators partially evaporate Waste Feed from the Department of Energy (DOE) and various recycle streams from within the pretreatment process. The Waste Feed is evaporated in order to optimize the operation of downstream unit operations. The Waste Feed flow is varied in order to control the level in the FEP separator. The FEP evaporator shall be designed to achieve a sodium concentration of 5 to 6M.

The LAW Submerged Bed Scrubber (SBS) condensate and treated LAW are fed to the TLP evaporator simultaneously. The treated LAW feed is fed continuously and at a constant rate while the flow of SBS condensate is varied in order to control the level in the TLP separator vessel. The TLP evaporator shall be designed to achieve a sodium concentration of 8 to 10M.

The feed stream is introduced into the recirculation loop on the suction side of the recirculation pump. The recirculation pump circulates the liquor at a rate of approximately 11,000 gpm. The pump discharges liquor through evaporator reboiler, which raises the temperature of the liquor by approximately 2 to 4 °F using 2.5 psig steam throttled from **high** pressure steam supply to the building. This small temperature rise is necessary to prevent the liquor from boiling (fouling) in the tubes before it reaches the separator vessel. Sufficient hydrostatic head is maintained to suppress boiling inside the reboiler. When the recirculating liquor reaches the separator vessel, flash evaporation occurs due to the reduced pressure in the vessel. The vapor flows through a series of separation trays and a removable demister pad section which are internal parts of the separator vessel. The vapor then flows to the primary condenser where the majority of the vapor is condensed. The

noncondensables and a small amount of moisture are vented to the ejector/condenser vacuum system. The secondary condenser system consists of primary ejector, secondary ejector, inter-condenser, and after-condenser. The humid noncondensables from the primary condenser flow to the suction side of the primary ejector which discharges to the inter-condenser. The vent from the inter-condenser flows to the suction side of the secondary ejector which discharges into the after-condenser. The vent from the after-condenser flows to the facility vessel vent system. The secondary condenser system is designed to achieve a pressure of 1.0 to 1.3 psia in the separator vessel during normal operating conditions. The operating pressure is automatically controlled by an air in-bleed into the suction line of the primary ejector. This operating pressure lowers the boiling point of the liquor to approximately 122 °F which reduces potential corrosion of the evaporator by chlorides. Condensate from the condensers flows by gravity to the condensate vessel. Some of the condensate is drawn off and used to wash the demister pads in the separator vessel. Because of the foaming tendencies of evaporator feed chemistry, when foaming is anticipated in the separator vessel, antifoam will be continuously added.

3.3 Performance

3.3.1 All three (3) evaporator systems shall be capable of continuous operation while achieving a feed evaporation rate ranging from 10 to 30 gpm. The design feed evaporator rate shall exclude all water/fluid addition to demister pads spray, separation trays, and antifoam injection.

3.3.2 Each evaporator system shall operate independently.

3.3.3 Each evaporator system shall have the ability to be placed on "total reflux" mode.

3.3.4 A minimum **separator** decontamination factor of **6.E+07** shall be achieved with consideration to achieving the evaporator stream operating conditions described in subsection 3.4 and the ALARA general design condition in subsection 3.1. **Separator decontaminator factor is defined as the ratio of Cesium in the condensate to the maximum concentration of Cesium in the feed stream.**

3.3.5 Evaporator system operating parameters shall minimize reboiler fouling by using low differential temperature and high tube velocity to the extent practical in the design.

3.3.6 The FEP evaporator systems shall produce waste concentration of 5 to 6M sodium (1.23 to 1.50 SG).

3.3.7 The TLP evaporator system shall produce waste concentration of 8 to 10M sodium (1.33 to 1.57 SG).

3.3.8 All evaporator system components within the R5/C5 black cell (except the demister pads) shall be nonreplaceable components with a design life of 40 years. Reboilers and recirculation pumps in the R5/C5 hot cell shall be remotely replaceable.

3.4 Design Conditions

3.4.1 General

3.4.1.1 For nominal conditions refer to Appendix A and Appendix B for the FEP evaporator and TLP evaporator stream data, respectively. The data defines the system performance operating conditions and requirements. For predicted maximum radionuclides, refer to Appendix C.

3.4.1.2 All equipment skids shall meet applicable Department of Transportation (DOT) requirements for road transportation per 49 CFR 173.

3.4.2 Physical Constraints/Interfaces

3.4.2.1 The FEP evaporator separator vessels (FEP-SEP-00001A/B) with demister pads shall be located in the R5/C5 black cell, room P-0106 on the 0-ft floor elevation. The TLP evaporator separator vessel (TLP-SEP-00001) shall be located in the R5/C5 black cell, room P-0117 on the 0-ft floor elevation. Demister pad assemblies shall be accessed through a sealed, shielded aperture in the 56 ft floor (10-ft diameter maximum). Refer to Appendices I and J for their locations and layout.

3.4.2.2 All Reboiler and support frame assemblies and recirculation pumps shall be located in the R5/C5 hot cell, room P-0123 on the 0-ft floor elevation. Each reboiler and support frame assemblies shall not weigh more than 27.5 tons including all lifting fixtures and lifting beams. The available space for each reboiler (excluding nozzles) has dimensions of 6 ft diameter by 15 ft high. All equipment assembly must fit through a 13 ft by 13 ft air lock door and shall not exceed 21 ft length. Assume air lock transportation cart is 3 ft high. The space envelope limitation of 6 feet diameter shall be used for mounting of remote connectors and seal flush reservoir on the recirculation pump assembly.

3.4.2.3 FEP evaporator primary condensers (FEP-COND-00001A/B) and secondary condenser system (FEP-COND-00002A/B, -00003A/B, and FEP-EJCTR-00040, -00041, -00042, -00043) shall be designed to fit in room P-0304 on the 56-ft floor elevation. TLP evaporator primary condenser (TLP-COND-00001) and secondary condenser system (TLP-COND-00002, -00003, and TLP-EJCTR-00064, -00067) shall be designed to fit in room P-0311 on the 56-ft floor elevation. Refer to Appendices I and J for locations and layout.

3.4.2.4 FEP evaporator condensate vessel and pump system (FEP-VSL-00005 and FEP-PMP-00006A/B) shall be designed to fit in room P-0105B (R2/C3) on the 0-ft floor elevation. TLP evaporator condensate vessel and pump system (TLP-VSL-00002 and TLP-

PMP-00002A/B) shall be designed to fit in room P-0118 (R2/C3) on the 0-ft floor elevation. Refer to Appendices I and J for locations and layout.

3.4.2.5 Antifoam vessel and pump system (AFR-TK-00001 and AFR-PMP-00006, -00007, -00008) shall be designed to fit in room P-0429 on the 77-ft floor elevation (R2/C2). Refer to Appendix K for locations and layout.

3.4.3 Buyer Supplied Utilities

Values for all utility supply pressures and temperatures are nominal values.

3.4.3.1 Plant service air and instrument air will be supplied at approximately 100 psig and 65 °F.

3.4.3.2 Deleted.

3.4.3.3 High pressure steam supply conditions:

3.4.3.3.1 Minimum operating condition: 110 psig @ 344°F

3.4.3.3.2 Normal operating condition: 118 psig @ 349°F

3.4.3.3.3 Maximum operating condition: 135 psig @ 358°F

3.4.3.3.4 Design condition: 163 psig @ 372°F

3.4.3.4 Cooling water **for condensers** will be supplied at **100** psig design/**95 psig maximum operating conditions** and 75 °F with a peak summer maximum of 83 °F. The cooling water temperature of 75 °F is valid for 85 % of the time through a year.

3.4.3.5 Demineralized water will be supplied at approximately 72.5 psig and 75 °F for demister pad and separation tray spray in the event that sufficient process condensate is unavailable.

3.4.3.6 Water, 5 M nitric acid at approximately 75 psig and 77 °F, or 50 % wt caustic at approximately 75 psig and 77 °F can be supplied for the Seller's flushing system.

3.5 Environmental Conditions

3.5.1 Storage

Prior to installation, the evaporator systems may be stored outdoors at ambient temperature extremes ranging from –30 °F dry-bulb to 117 °F dry-bulb and with a relative humidity of 0-100 %.

3.5.2 Evaporator Separator Vessels

Equipment environmental data for separator vessel qualification is provided in their individual MDS in Section 2 of the MR.

3.5.3 Reboilers and Recirculation Pumps

Equipment environmental data for reboilers and recirculation pumps qualification is provided in their individual MDS in Section 2 of the MR.

3.5.4 Primary condensers and Vacuum Systems

Equipment environmental data for reboilers and recirculation pumps qualification is provided in their individual MDS in Section 2 of the MR..

3.5.5 Condensate Vessels, Antifoam Vessel, Condensate Pumps, Antifoam Pumps, FEP Feed Pumps, FEP Concentrate pumps, Reboiler Steam Condensate Transfer Stations, and steam conditioning systems components

The condensate vessels (FEP-VSL-00005 and TLP-VSL-00002), condensate pumps (FEP-PMP-00006A/B and TLP-PMP-00002A/B), and FEP/TLP reboiler steam condensate transfer stations (FEP-VSL-00021, FEP-PMP-00010A/B, FEP-VSL-00022, FEP-PMP-00011A/B, TLP-VSL-00047, TLP-PMP-00012A/B) will be installed indoors in an R2/C3 area. The antifoam vessel (AFR-TK-00001) and antifoam pumps (AFR-PMP-00006, -00007, and -00008) will be installed indoors in an R2/C2 area. **Steam conditioning systems components will be installed indoors in an R3/C3 area.** The R2/C3, R2/C2 **and R3/C3** areas are maintained between 59 to 113 °F dry-bulb temperature during normal operation. Radiation exposure will be 0.5 mRad/hr. **Equipment environmental data for Q components of steam conditioning systems is provided in their individual EQD in Section 2 of the MR.**

3.6 Feed Pumps

3.6.1 For feed pump requirements, refer to individual MDS in Section 2 of the MR and equipment sketches in Appendices I and J of this specification.

3.6.2 Two TLP feed pumps (TLP-PMP-00005A/B) shall be supplied by the Seller in accordance with Buyer's specification *24590-WTP-3PS-MPC0-T0002, Engineering Specification for General Centrifugal Pumps to Meet Requirements of ASME B73.1M-1991 and ASME B73.2M-1991 for Commercial (CM) Components.*

3.6.3 The TLP feed pumps shall be centrifugal type. Each pump shall be provided with a pump motor mounted on a common base plate for contact maintenance. The pumps are plumbed together for operational flexibility. Seal flush plan to API 7353.

3.6.4 Each TLP feed pump shall be provided with an adjustable speed drive (ASD). The ASD shall be compliant with specification *24590-WTP-3PS-EVV1-T0001, Engineering Specification for Low Voltage Adjustable Speed Drives* and specification *24590-WTP-3PS-MUMI-T0002, Engineering Specification for Low Voltage Induction Motors.*

3.6.5 LAW SBS Condensate feed pumps (TLP-PMP-00005A/B) for the TLP evaporator system shall be supplied by the Seller. These pumps shall be designed for contact maintenance and designed for the following operating conditions. All fluid properties are referenced at 77 °F.

- 10 to 38 gpm
- 1.0 to 16.3 cP
- 1.0 to 1.41 SG
- 68 to 167 °F
- less than 3 wt % feed solids.

3.6.6 For FEP feed pumps (FEP-PMP-00007A/B), the sections for liquid property and operating conditions on the Mechanical Data Sheets (Section 2 of the MR) shall be specified by the Seller. The Buyer will procure pumps which meet these criteria unless otherwise directed by the Seller as described in Section 1.2.16. The following operating conditions shall apply. All fluid properties are referenced at 77 °F.

- 20 to 50 gpm
- 4.2 to 12 cP
- 1.0 to 1.29 SG
- 59 to 122 °F
- 0 to 10 wt % suspended solids

3.6.7 Treated LAW Collection vessel feed pump (CXP-PMP-00002A/B) for the Treated LAW evaporator system will be specified and provided by the Buyer for the following operating conditions. All fluid properties are referenced at 77 °F.

- 22 to 34 gpm
- 0.6 to 5.0 cP
- 1.0 to 1.26 SG
- 59 to 113 °F
- 0 wt % suspended solids

3.6.8 The feed pump flow rate shall be controlled by the separator vessel liquid level.

3.6.9 All waste feeds shall be transferred by the feed pump into the recirculation line on the suction side of the recirculation pump.

3.6.10 Deleted.

3.7 Recirculation Pumps

3.7.1 For recirculation pump requirements, refer to individual MDS in Section 2 of the MR and equipment sketches in Appendices I and J of this specification.

3.7.2 The recirculation pumps shall be axial-flow type mounted vertically in an elbow of the recirculation loop.

3.7.3 Each recirculation pump shall be provided with a pump motor, **seal water cooling fan**, and an adjustable speed drive (ASD). Motors shall be provided with radiation resistant insulation, rated for **total integrated rad (gamma) as specified in MDS**. The ASD shall be compliant with specification *24590-WTP-3PS-EVV1-T0001, Engineering Specification for Low Voltage Adjustable Speed Drives* and specification *24590-WTP-3PS-MUMI-T0002, Engineering Specification for Low Voltage Induction Motors.*

3.7.4 The recirculating pumps shall have dual mechanical seals that will be lubricated/flushed with water. Flush piping will be based on API Plan 53. Seller shall coordinate with Buyer for details.

3.7.5 Inlet and outlet pipe ends of the recirculation pumps shall be prepared for butt welding.

3.7.6 Seller shall comply with API 610 nozzle loading requirements .

3.7.7 The recirculation pump nozzle locations shall be within (±) 1/4 inch tolerance. However, the tolerance measurement device shall have a minimum of 1/1000 inch accuracy.

3.7.8 The recirculation pump remote flange mating surface shall be approximately at 12 ft-11 inches plant elevation. The pump and motor withdrawal length shall not be greater than 6 ft-1 inch. The dowel pins shall be 2 in diameter with the master being 1 ft-3 3/4 inches and the secondary being 1ft-3/4 inch. The bolts shall be 1-1/4 inch ACME studs with 2 inches nuts.

3.7.9 The recirculation pumps shall be designed with the following features to ensure ease of process operating with a long expected mechanical lifetime:

- Low operating speed, high flow, and low head process conditions.
- Low casing fluid velocity to minimize wear on the casing.
- Top mounted motor and vertical removal design for easy crane access.
- The recirculation pump motor, impeller, shafting, and seals shall be remotely removable as one unit by using a single crane hook and crane mounted impact wrench with CCTV cameras.

3.7.10 FEP recirculation pumps (FEP-PMP-00009A/B) shall be designed for the following operating conditions. All fluid properties are referenced at 77 °F.

- 11,000 gpm

- 5.5 to 12 cP
- 1.23 to 1.50 SG
- 59 to 140 °F
- 1 to 20 wt % suspended solids

3.7.11 TLP recirculation pump (TLP-PMP-00001) shall be designed for the following operating conditions. All fluid properties are referenced at 77 °F.

- 11,000 gpm
- 0.68 to 30 cP
- 1.33 to 1.57 SG
- 77 to 145 °F
- less than 4 wt % suspended solids

3.7.12 Each recirculation pump shall be provided with the remote electrical and process connectors required for use on it. All remote electrical and process connectors, that are not provided by Buyer, shall be procured as commercial material.

3.7.12.1 Included with the connectors shall be the Harness "D" assemblies as described on the Appendix T, Section T.1, sketch titled "Fabrication Assembly Details Harness "D". This includes the fixed mounted electrical receptacle and protective cover, the electrical connector plug needed for the manufacture of the in-cell remote electrical jumper (by Buyer) for the power supply to the heat exchanger motor which will mount on the recirculation pumps. The cable for the Harness "D" assembly shall meet the 200 mega-rad TID requirement and shall be tested per the provided special instructions.

3.7.12.2 The fixed mounted fluid connectors for the mechanical seal barrier fluid systems and the required 90-degree shell housing design remote connectors for use in the fabrication of Buyer's jumpers and blanked connectors for sealing the pump grease and cooling system connections on the pumps shall be provided.

3.7.12.3 The electrical connectors shall meet the criteria defined on Appendix T, Section T.1 including electrical and instrumentation jumper connector data sheet.

3.7.13 All process and pneumatic connectors shall be designed and qualified per specification 24590-WTP-3PS-PF00-T0008, Engineering Specification for Pneumatic/Process connectors (Non-ITS). An in-line, keyed, process socket connector as noted in Section 3.5.1.3 of specification 24590-WTP-3PS-PF00-T0008 is not required. A keyed, process socket connector with 90 degree back shell is acceptable.

3.8 Concentrate Pumps

3.8.1 For concentrate pump requirements, refer to individual MDS in Section 2 of the MR and equipment sketches in Appendices I and J of this specification.

3.8.2 Two TLP concentrate pumps (TLP-PMP-00011A/B) shall be supplied by the Seller in accordance with Buyer's specification *24590-WTP-3PS-MPC0-T0002, Engineering Specification for General Centrifugal Pumps to Meet Requirements of ASME B73.1M-1991 and ASME B73.2M-1991 for Commercial (CM) Components.*

3.8.3 Deleted

3.8.4 The TLP concentrate pumps shall be centrifugal type. Each pump shall be provided with a pump motor mounted on a common base plate for contact maintenance. The pumps are plumbed together for operational flexibility. Seal flush plan to API 7353.

3.8.5 Each TLP concentrate pump shall be provided with an adjustable speed drive (ASD). The ASD shall be compliant with specification *24590-WTP-3PS-EVV1-T0001, Engineering Specification for LAW Voltage Adjustable Speed Drives* and specification *24590-WTP-3PS-MUMI-T0002, Engineering Specification for Low Voltage Induction Motors.*

3.8.6 The concentrate pump flow rate shall be controlled by the specific gravity of the waste concentrate in the evaporator separator vessel.

3.8.7 For FEP concentrate pumps (FEP-PMP-00008A/B), the sections for liquid property and operating conditions on the Mechanical Data Sheets (Section 2 of the MR) shall be specified by the Seller. The Buyer will procure pumps which meet these criteria unless otherwise directed by the Seller as described in Section 1.2.16. The following operating conditions shall apply. All fluid properties are referenced at 77 °F.

- 3 to 34 gpm
- 5.5 to 12 cP
- 1.23 to 1.50 SG
- 59 to 140 °F
- 1 to 20 wt % suspended solids

3.8.8 The TLP concentrate pumps (TLP-PMP-00011A/B) shall be supplied by the Seller. The pumps shall be designed for contact maintenance and designed for the following operating conditions. All fluid properties are referenced at 77 °F.

- 5 to 14 gpm
- 0.68 to 30 cP
- 1.4 to 1.57 SG
- 68 to 145 °F

- less than 4 wt % suspended solids

3.9 Reboilers

3.9.1 For reboiler requirements, refer to individual MDS in Section 2 of the MR and equipment sketches in Appendices I and J of this specification.

3.9.2 The reboilers shall be designed in accordance with Buyer's specification 24590-WTP-3PS-MES0-T0001, *Specification for Shell and Tube Heat Exchangers*. Seller shall comply with nozzle loading requirements specified in Appendix V of this specification **instead of nozzle loading requirements specified in Buyer's specification 24590-WTP-3PS-MV00-T0001, *Specification for Pressure Vessel Design and Fabrication.***

3.9.3 The reboilers (FEP-RBLR-00001A/B and TLP-RBLR-00001) shall be of all welded construction on both tube and shell sides.

3.9.4 Reboiler tubes shall be seamless and welded to the tubesheet(s) with full strength welds. The tubes shall include a corrosion allowance of 0.04 inch for the process side.

3.9.5 The reboilers shall be capable of sustaining a water evaporation rate of 10 to 30 gpm based on a final SG of 1.50 for the FEP evaporator systems and 1.57 for the TLP evaporator system.

3.9.6 Reboiler process fluid velocity shall be greater than 4.0 ft/sec for solid suspension and not exceed 10 ft/sec velocities for minimal erosion effects.

3.9.7 The reboiler and support frame assemblies shall be designed for remote installation and replacement as one unit.

3.9.8 The reboiler and support frame assemblies shall be designed for horizontal transportation as one unit within the hot cell but for vertical installation with integral tailing features.

3.9.9 The maximum dimensions for a reboiler shall be 6 ft diameter and 15 ft height. The reboiler design shall be either multi-pass or U-tube heat exchanger with side bottom process fluid inlet and outlet.

3.9.10 The reboiler process fluid inlet and outlet nozzles shall be sized not greater than 24 inch diameter. Inlet and outlet pipe ends of the reboiler shall be prepared for butt welding.

3.9.11 Seller shall supply as-built dimensions for the nozzle locations upon completion of fabrication. Measurements shall be taken to the nearest 0.001 inch measuring equipment accuracy shall be within ± 0.006 inch.

3.9.12 Deleted

3.9.13 **High** pressure steam will be provided by Buyer. The Seller is responsible for providing steam conditioning **system components . Each steam conditioning**

system consists of 2 pressure control valves, 2 flowmeters, and one surface absorption desuperheater to produce Seller's specified saturated pressure steam for reboiler operation.

3.9.14 Seller shall provide specifications for steam condensate removal system. The steam condensate will travel from the reboiler through approximately 100 lateral feet and 2 vertical feet of pipe to the steam condensate vessel.

3.9.15 The reboiler shall be designed such that the static pressure of the process fluid above the reboiler is sufficient to suppress the boiling in the reboiler tubes. Boiling shall occur only near or at the liquid surface in the evaporator separator vessel.

3.9.16 The temperature rise of the process fluid as it passes through the reboiler shall be approximately 2 – 4 °F design basis to minimize the potential for tube fouling.

3.9.17 Reboiler will be installed without insulation. Reboiler duty and steam demand calculations shall include heat loss from all reboiler surfaces without insulation.

3.9.18 **Supply all piping from the reboiler vessel to remote connectors (i.e PUREX, Grayloc, etc.). Remote connectors will be provided by Buyer for Seller to install on reboilers.**

3.9.19 **Seller shall qualify the entire recirculation piping connecting to reboiler, recirculation pump, and separator vessel. Exception, Buyer will qualify all small bore piping/jumper connecting to reboilers.**

3.10 Evaporator Separator Vessels

3.10.1 For separator vessel requirements, refer to individual MDS in Section 2 of the MR and equipment sketches in Appendices I and J of this specification.

3.10.2 The separator vessels shall be designed in accordance with Buyer's specification 24590-WTP-3PS-MV00-T0001, *Specification for Pressure Vessel Design and Fabrication*. Seller shall comply with nozzle loading requirements specified in Appendix V of this specification **instead of nozzle loading requirements specified in Buyer's specification 24590-WTP-3PS-MV00-T0001, *Specification for Pressure Vessel Design and Fabrication.***

3.10.3 The separator vessels shall be designed to maximize liquid – vapor separation and to achieve a 30 gpm feed evaporation rate.

3.10.4 The separator vessels shall incorporate nozzle connections for temperature (including thermowells), pressure, level, and density instrumentation as required. The Seller shall propose reliable measurement instrumentation for Buyer to review.

3.10.5 Deleted.

3.10.6 The top section of the separator vessel shall incorporate lateral guides to the 56 ft floor to minimize horizontal forces and base overturning moments during a seismic event.

3.10.7 The centerline elevation of the separator vessel offgas nozzles shall be no higher than 47.**0** ft plant elevation.

3.10.8 The separator vessel heads shall be removable for access to the demister pads section, which contains two layers of 12 inch thick Inconel 625 fine mesh.

3.10.9 The **FEP** separator vessels **(FEP-SEP-00001A and FEP-SEP-00001B)** shall incorporate a 2 inch inlet nozzle to supply sufficient dilution air to negate hydrogen buildup. **The TLP separator vessel (TLP-SEP-00001) does not require a 2 inch inlet nozzle for purge air.**

3.10.10 The separator vessel shall incorporate a series of three internal separation trays and an internal two-layer demister pads section to deentrain the steam droplets and remove solids from the vapor.

3.10.11 Spray nozzles shall be provided to allow nitric acid cleaning of the demister mesh and separation trays. The placement of spray nozzles shall accommodate demister section removal and not hinder maintenance operations.

3.10.12 A spray pipe with nozzles located below the lower demister pad shall be provided to spray demin water or recycled condensate into the steam flow to assist in mesh performance.

3.10.13 To improve demister efficiency and facilitate decontamination, the demister pads shall be sprayed from above and below with recycled condensate or 5 M nitric acid from a spray control system located at the 56 ft elevation. Sections of the demister pads shall be able to be sprayed either individually or collectively.

3.10.14 Differential pressure across a series of separation trays and the demisters pad section shall not significantly elevate boiling point.

3.10.15 All nozzle connection points shall be provided clear and below any surrounding floor structural steel at 56 ft plant elevation.

3.10.16 The antifoam nozzles of the evaporator separator vessel shall be located above the uppermost liquid level.

3.10.17 **Seller shall supply separator vessel external spray ring piping assembly for demister pads. However, Buyer will qualify separator vessel external spray ring piping assembly.**

3.10.18 **The separator vessel lower frame (square ring beam) will be filled with grout both inside and outside. Seller shall design to reflect this boundary condition.**

3.11 Primary Condensers

3.11.1 For primary condenser requirements, refer to individual MDS in Section 2 of the MR and equipment sketches in Appendices I and J of this specification

3.11.2 Primary condensers shall be designed in accordance with Buyer's specification 24590-WTP-3PS-MES0-T0001, *Specification for Shell and Tube Heat Exchangers*.

3.11.3 The primary condensers (FEP-COND-00001A/B and TLP-COND-00001) shall be of all welded construction on the process fluid side. Tubes shall be welded to the tubesheets(s) with full strength welds.

3.11.4 Seller shall comply with nozzle loading requirements specified in Appendix V of this specification **instead of nozzle loading requirements specified in Buyer's specification 24590-WTP-3PS-MV00-T0001, *Specification for Pressure Vessel Design and Fabrication.***

3.11.5 Condensers shall be designed with hinged bonnets to allow isolation of leaking tubes utilizing contact maintenance techniques.

3.11.6 Condensers shall be designed for retubing as part of the maintenance strategy.

3.11.7 Condensers shall be designed to maximize vapor condensation from the offgas streams at a nominal rate of 30 gpm.

3.11.8 Average cooling water temperature rise of 18 °F shall be used for condenser design.

3.11.9 Cooling water (tube side) pressure must exceed the process vapor (shell side) pressure.

3.11.10 The primary condensers shall be compatible with process condensate that has a pH of 7 to10, a temperature of 122 °F, and a 0 to 300 ppm ammonium ion concentration. They shall also be compatible with 5M nitric acid used for separator vessel decontamination.

3.11.11 Primary condenser will be installed without insulation. Primary condenser duty and cooling water demand calculations shall include heat loss from all primary condenser surfaces without insulation.

3.12 Secondary Condenser System

3.12.1 The secondary condenser system shall consist of inter-condenser, after-condenser, and two steam ejectors. For secondary condenser system requirements, refer to individual MDS in Section 2 of the MR and equipment sketches in Appendices I and J of this specification.

3.12.2 Inter-condensers and after-condensers shall be designed in accordance with Buyer's specification 24590-WTP-3PS-MES0-T0001, *Specification for Shell and Tube Heat Exchangers*.

3.12.3 Seller shall comply with nozzle loading requirements specified in Appendix V of this specification **instead of nozzle loading requirements specified in Buyer's specification 24590-WTP-3PS-MV00-T0001, *Specification for Pressure Vessel Design and Fabrication.*.**

3.12.4 Inter-condensers and after-condensers shall be of all welded construction on the process fluid side. Tubes shall be welded to the tubesheets(s) with full strength welds.

3.12.5 The boiling point elevation range of the evaporator concentrate for the FEP evaporator system is approximately 11 to 18 °F and for TLP evaporator system is approximately 17 to 24 °F.

3.12.6 The evaporator separator vessel pressure shall be maintained by a two-stage vacuum ejector system. The first stage shall maintain a vacuum on the primary condenser and consists of a steam ejector, air in-bleed control valve, and an inter-condenser. The vapor discharged from the inter-condenser enters the second stage of the vacuum system. The second stage shall consist of a second steam ejector and an after-condenser.

3.12.7 The secondary condenser systems shall provide capability for operating at a vacuum as low as practicably achievable.

3.12.8 The two-stage vacuum ejector system shall be designed to control the separator vessel pressures at between 1.0 and 1.3 psia.

3.12.9 The desired vacuum within the separator vessel shall be obtained by automatically controlling the air in-bleed into the suction side of the first-stage vacuum ejectors.

3.12.10 Process condensate from each condenser shall be individually routed to the process condensate vessel.

3.12.11 All components of secondary condenser skid will be installed without insulation. The duty, cooling water demand, and steam demand calculations shall include heat loss from all surfaces without insulation.

3.12.12 Cooling water pressure must exceed the process vapor pressure.

3.12.13 The operating cycle for each after-condenser is 7,001,950. This data is to be included in the Fatigue Assessment Report.

3.13 Evaporator Process Condensate Vessels & Pumps

3.13.1 For process condensate vessel and pump requirements, refer to individual MDS in Section 2 of the MR and equipment sketches in Appendices I and J of this specification

3.13.2 The evaporator process condensate vessels shall be designed in accordance with Buyer's specification 24590-WTP-3PS-MV00-T0001, *Specification for Pressure Vessel Design and Fabrication.*

3.13.3 Seller shall comply with nozzle loading requirements for vessels specified in Buyer's specification 24590-WTP-3PS-MV00-T0001, *Specification for Pressure Vessel Design and Fabrication*.

3.13.4 The FEP evaporator process condensate vessel (FEP-VSL-00005) shall be designed for an operating volume of 4144 gallons (911-gallon batch).

3.13.5 The support frame shall be made such that the overflow nozzle centerline for the FEP evaporator process condensate vessel shall be at or above 15 ft-5 3/8 inches plant elevation.

3.13.6 The TLP evaporator process condensate vessel (TLP-VSL-00002) shall be designed for an operating volume of **1916** gallons (375-gallon batch).

3.13.7 The support frame shall be made such that the overflow nozzle centerline for the TLP evaporator process condensate vessel shall be at or above 17 ft-5 7/8 inches in plant elevation.

3.13.8 The evaporator process condensate vessels shall be equipped with interior wash rings to facilitate decontamination per standard drawing 24590-WTP-MV-M59T-00011.

3.13.9 Evaporator process condensate vessels and pumps shall be designed for contact maintenance.

3.13.10 Process condensate pumps shall be in accordance with Buyer's specification 24590-WTP-3PS-MPC0-T0002, *Engineering Specification for General Centrifugal Pumps to Meet Requirements of ASME B73.1M-1991 and ASME B73.2M-1991 for Commercial (CM) Components*.

3.13.11 Each process condensate pump shall be provided with an adjustable speed drive (ASD). The ASD shall be compliant with specification *24590-WTP-3PS-EVV1-T0001, Engineering Specification for Low Voltage Adjustable Speed Drives* and specification *24590-WTP-3PS-MUMI-T0002, Engineering Specification for Low Voltage Induction Motors.*

3.13.12 The process condensate pumps (FEP-PMP-00006A/B and TLP-MPM-00002A/B) shall be centrifugal type. Each pump shall be provided with a pump motor mounted on a common base plate for contact maintenance. The pumps are plumbed together for operational flexibility.

3.13.13 The FEP evaporator process condensate pumps (FEP-PMP-00006A/B) shall be designed for the maximum feed evaporation rate of 60 gpm (30 gpm per FEP evaporator) and maximum steam ejector demands. The TLP Evaporator condensate pumps (TLP-PMP-00002A/B) shall be designed for the maximum feed evaporation rate of 30 gpm and maximum steam ejector demands.

3.13.14 The process condensate vessels and pumps shall be compatible with process condensate that has a pH of 7 to10, a temperature of 68 to 145 °F, and a 0 to 300 ppm ammonium ion concentration. They shall also be compatible with 5M nitric acid used for separator vessel decontamination.

3.13.15 The process condensate pumps shall have the ability to supply adequate condensate to the separation trays and demister pad sprays in the separator vessels.

3.13.16 Single mechanical seals shall be incorporated in each process condensate pump in accordance with American Petroleum Institute (API) Plan 11.

3.13.17 The process condensate pumps shall be designed to comply with pump nozzle loading requirements specified in API 610.

3.14 Antifoam Skid, Reboiler Condensate Transfer Stations, and Steam Conditioning Components

3.14.1 For antifoam vessel and pump requirements, refer to individual MDS in Section 2 of the MR and equipment sketches in Appendix K of this specification.

3.14.2 The antifoam vessel and reboiler condensate vessels shall be designed in accordance with Specification 24590-WTP-3PS-MV00-T0001, *Specification for Pressure Vessel Design and Fabrication.*

3.14.3 Seller shall comply with nozzle loading requirements specified Buyer's specification 24590-WTP-3PS-MV00-T0001, *Specification for Pressure Vessel Design and Fabrication.*

3.14.4 One (1) antifoam system composed of a vessel (AFR-TK-00001) with three metering pumps (AFR-PMP-00006, -00007, -00008) shall supply antifoam reagent to both FEP and TLP evaporator systems.

3.14.5 The antifoam vessel (AFR-TK-00001) shall be designed for a maximum operating volume of 1500 gallons.

3.14.6 Deleted.

3.14.7 Each antifoam vessel shall be equipped with the following:

- Reagent inlet nozzle
- Demineralized water inlet nozzle
- Level instrumentation nozzle
- Agitator to provide homogeneous antifoam solutions

3.14.8 The antifoam pumps shall be positive displacement metering types. The metering pump design shall include an internal relief valve or an internal bypass valve that automatically stops the pumping action when the line pressure gets above a setpoint.

3.14.9 Antifoam vessels and pumps shall be designed for contact maintenance.

3.14.10 Seller shall supply three (3) identical transfer stations, which collect steam condensate drained from the reboilers.

3.14.11 The transfer stations shall be designed to support continuous steady state operation in maintaining nominal operating level while receiving and supplying steam condensate to steam conditioning desuperheater and to a general condensate receiver.

3.14.12 The condensate transfer vessel design and configuration shall support installation of pressure-differential level instrumentation and associated flanged "direct connect diaphragm seal pressure transmitters.

3.14.13 The condensate transfer vessel shall be a vertical oriented vessel constructed of 304L stainless steel with a capacity of **approximately** 225 gallons.

3.14.14 Each condensate transfer vessel shall be designed to be attached to a mounting ring which will be installed using anchor bolts.

3.14.15 The condensate transfer vessel shall be designed to support a minimum operating volume of 80 gallons.

3.14.16 The condensate transfer pumps shall be vertical turbine pumps with a by-pass valve to limit the pump discharge pressure preventing the motor to become overloaded. The pumps along with their motors shall be mounted on the transfer stations.

3.14.17 Single mechanical seals shall be incorporated in each condensate transfer pump in accordance with American Petroleum Institute (API) Plan 11.

3.14.18 The condensate transfer pumps shall be designed to comply with pump nozzle loading requirements specified in API 610.

3.14.19 The condensate transfer pumps and accessories shall be made of 300 series stainless steel. The pump materials of construction for wetted **p**arts shall be cast high alloy steel 316 SS **or better**.

3.14.20 A 2-inch nozzle on the side of each reboiler steam condensate vessel shall be provided for an additional condensate drain from the reboiler steam conditioning system desuperheater. Location of the 2-inch inlet drain nozzle is provided in Appendix L.

3.14.21 Provide three (3) sets of steam conditioning system components for FEP and TLP evaporators to reduce high pressure steam to produce Seller's specified saturated pressure steam for optimal reboiler condition. Each set consists of two (2) control valves, two (2) flowmeters, and one (1) absorption desuperheater.

3.14.22 The absorption desuperheater vessels shall be designed in accordance with Specification 24590-WTP-3PS-MV00-T0001, *Engineering Specification for Pressure Vessel Design and Fabrication*. Although the absorption desuperheater vessel is classified as SC-III (see Appendix E), Seller is allowed to use SC-I vessel nozzle loads specified in Table A1 of Appendix A and thermal reduction factor specified in Section 7.7.4 of Specification 24590-WTP-3PS-MV00-T0001.

3.14.23 The control valves and flowmeters shall be designed in accordance with Specification 24590-WTP-3PS-JQ07-T0001, *Engineering Specification for Instrumentation for Package Systems.*

3.14.24 The design and analysis of SC-I/II valves and flowmeters shall be performed to seismic/dynamic acceleration of 4.54g in accordance with Section 3 of 24590-WTP-DC-PS-01-001, Pipe Stress Design Criteria including "Pipe Stress Criteria" and "Span Method Criteria".

3.14.25 See Section T.14 of Appendix T for additional design inputs for steam conditioning system components.

3.15 Mechanical Handling Requirements

3.15.1 Equipment located in the R5/C5 hot cell shall be designed in accordance with Buyer's specification 24590-WTP-3PS-M000-T0002, *General Specification for Mechanical Handling Equipment Design & Manufacture.*

3.15.2 Seller designed equipment shall incorporate jumper connector nozzles to facilitate process, utility, instrument, and power connections to the Buyer supplied jumpers and systems.

3.15.3 Equipment skids shall incorporate jumper nozzles for process pipework (e.g., pump suction and discharge connections, utilities, instrumentation, and power, as required).

3.15.4 Seller shall identify all interface points for systems requiring connection to the Buyer's process piping, jumpers, and utility systems.

3.15.5 The nozzle **position** tolerance requirements for reboiler and recirculation pumps in the R5/C5 hot cell shall be ±1/4 inch.

3.15.6 Deleted

3.15.7 Deleted

3.16 Loadings

3.16.1 The evaporator equipment assemblies shall be self-supporting, capable of carrying the static loads of components, and capable of handling stresses imposed during shipment, installation, operation and an earthquake.

3.16.2 Loads to be considered for the structural design of evaporator vessel, equipment, and components shall be in accordance with applicable codes, standards, and reference documents listed in Section 2 of this specification.

3.16.3 All vessels or equipment with SC-I and SC-II designation shall be analyzed and **designed** in accordance with AISC N690 and requirements specified in the Appendix V.

3.16.4 All vessels or equipment with SC-III and SC-IV designation shall be analyzed and **designed** in accordance with the AISC **Allowable Stress Design (Manual of Steel construction)** and UBC zone 2B.

3.16.5 Seller shall complete a seismic analysis of the evaporator package designs, including skids, and skid anchorage, equipment and pressure vessel anchorage, piping anchorage. Loadings shall be calculated in accordance with the appropriate requirements of Buyer's specifications 24590-WTP-3PS-SS90-T0001, Engineering Specification for Seismic Qualification of Seismic Category I/II Equipment and Tanks, and 24590-WTP-3PS-FB01-T0001, Structural Design Loads for Seismic Category III & IV Equipment and Tanks.

3.16.6 All vessels, heat exchangers, and any other pressure containing vessels or equipment shall be analyzed and **designed** by the Seller per Buyer's specification 24590-WTP-3PS-MV00-T0002, *Engineering Specification for Seismic Qualification Criteria for Pressure Vessels,* Buyer's specification 24590-WTP-3PS-MV00-T0001, *Specification for Pressure Vessel Design and Fabrication.*

3.16.7 Deleted.

3.16.8 Except for reboiler and recirculation pump skids, all equipment skids shall be designed for a maximum floor loading of 160 lbs/ft^2. Refer to drawings 24590-PTF-DD-S13T-00022, 24590-PTF-DD-S13T-00025, 24590-PTF-DD-S13T-00028, 24590-PTF-DD-S13T-00027, 24590-PTF-DD-S13T-00036, 24590-PTF-DD-S13T-00042, 24590-PTF-DD-S13T-00043, and 24590-PTF-DD-S13T-00044 for structural concrete embed details.

3.16.9 The embed location for reboilers are detailed on drawings 24590-PTF-DD-S13T-00025, 24590-PTF-DD-S13T-00027, 24590-PTF-DD-S13T-00028, and 24590-PTF-DD-S13T-00049. Each embed connects to the **Buyer's rigid concrete-filled steel frame**. To avoid displacement in skid under the heavy reboiler weight, reboiler frame shall rest upon support posts with the embeds underneath. These embeds are type "D" which have been designed for ultimate compressive strength of 100 kips.

3.17 Electrical Requirements

3.17.1 The electric motor drive shall conform to the requirements set forth in Buyer's specification 24590-WTP-3PS-EVV1-T0001, *Engineering Specification for Low Voltage Adjustable Speed Drives.*

3.17.2 The pump motor and all other motors in this evaporator package shall conform to the requirements set forth in Buyer's specification 24590-WTP-3PS-MUMI-T0002, *Engineering Specification for Low Voltage Induction Motors.*

3.17.3 Seller shall comply with the requirements set forth in Buyer's specification 24590-WTP-3PS-EKP0-T0001, *Engineering Specification for Electrical Requirements for Packaged Equipment.*

3.18 Instrumentation and Control Requirements

3.18.1 General

3.18.1.1 All controls, control systems, control panels, alarm systems, analyzers, instrumentation, and their installation into the evaporator system shall conform to the requirements set forth in Buyer's specification 24590-WTP-3PS-JQ07-T0001, *Engineering Specification for Instrumentation for Package Systems*.

3.18.1.2 The Seller shall provide instrument data sheets and installation details. The Buyer will use this information for procurement and installation of required instrumentation.

3.18.1.3 The Seller shall provide functional test set points and recommended operating set points with the packaged systems.

3.18.1.4 The Seller shall supply the control requirements, which shall consist of the control loop definitions, system interlocks, alarms, and control philosophy.

3.18.1.5 The Buyer will use the Seller's control requirements to provide the software requirement specification for logic programming and DCS hardware, which will integrate the Seller's control requirements into the Buyer's overall control system.

3.18.1.6 Seller shall comply with NQA-1 1989, 11S-2, for computer program testing.

3.18.1.7 The following table describes the work processes and the division of the responsibilities:

	Buyer's Responsibility	Seller's Responsibility
Blank Instrument Data Sheet	•	
Complete Instrument Data Sheet		•
Instrument Installation Details		•
Instrumentation Procurement	•	
Instrumentation Installation	•	
Functional Test Set Points		•
Operating Set Points		•
Control Requirements		•
Software Requirements Specification	•	
Logic Programming	•	
DCS Hardware	•	

3.18.2 Other

The Seller shall select level, specific gravity, temperature, and pressure instrumentation that shall provide accuracy of the measured range as specified in Buyer's specification 24590-WTP-3PS-JQ07-T0001, *Engineering Specification for Instrumentation for Package Systems*.

3.19 Lifting Requirements

3.19.1 Seller shall identify the weight and center of gravity of each equipment skid.

3.19.2 Seller shall provide yokes for separator vessels, reboiler and support assemblies, and recirculation pumps for installation and remote maintenance. Each part will be made of 304SS. The yokes shall be designed for balanced lifting and handling by a single hook crane. The yokes shall be designed in accordance with ANSI N14.6 and Buyer's specification 24590-WTP-3PS-MJJ0-T0001, *Specification for Lifting Beams for Mechanical Handling Equipment*.

3.19.3 All evaporator equipment and skids shall have lift points and attachment mechanism. Lifting bail design shall comply with proposal hook design shown in Appendix G.

3.19.4 All lifting attachments shall have a safety factor of three (3), based on the material yield strength. The lifting points shall have a label clearly identifying its safe working load. If forged bolts are used, they shall be used in accordance with ASME B18.15.

3.19.5 The reboiler and support assemblies shall be designed for horizontal transportation in the hot cell following by vertical up-ending. The reboiler and support assemblies shall have tailing lug and tilt-up features for vertical installation with a 2-ton hoist for tailing operation.

3.19.6 The lifting lugs shall be designed to permit lifting the equipment skid without distortion or damage to the components of the equipment skid.

3.19.7 All lifting points shall be proof tested in situ. Test and examination certificates shall be provided to the Buyer review.

3.19.8 Each reboiler and support frame assembly shall be lift tested by the Seller to demonstrate proper vertical orientation using the Seller-supplied lifting fixture. This testing includes verification of all tilt up features. Each reboiler shall be balanced after fabrication. Actual vertical lift (with vessel empty) shall not more than 1/4 inch from true verticality. Permanent deflection or a change in the assembly alignment is unacceptable. The Seller shall notify the Buyer a minimum of 15 working days in advance of reboiler and support frame assembly lift test. The Buyer may send representatives to witness the inspections or perform an independent inspection.

3.19.9 Each recirculation pump motor assembly (that includes the pump motor, shaft, propeller, O-rings, barrier system heat exchanger and fan, seal housing, mechanical seal, and the upper cover plate assembly) shall be lift tested by the Seller to demonstrate proper vertical orientation using the Seller-supplied lifting fixture. The lift test shall include a vertical lift of the pump motor assembly from the pump support plate and back down onto the pump support plate in a single lift. The bottom of the pump motor assembly shall clear all alignment pins at its highest lift point. Pump motor assembly shall not exceed 1/4" from true vertical when suspended with the lifting fixture. Permanent deflection or a change in the assembly alignment that occurs during the test is unacceptable. The Seller shall notify the Buyer a minimum of 15 working days in advance of recirculation pump motor assembly lift test. The Buyer may send representatives to witness the inspections or perform an independent inspection.

3.20 Accessibility and Maintenance

3.20.1 General Maintenance Requirements

Accessibility and maintenance requirements shall be per this specification and its addenda and attachments.

3.20.2 R5/C5 Black Cell Equipment Maintenance Requirements

3.20.2.1 No equipment requiring maintenance, with the exception of demister pads, shall be located inside the R5/C5 black cells (rooms P-0106 and P-0117). The nonreplaceable 40-year life components shall include offgas piping, separator vessels and all its internal parts (except demister pads) and their supporting structures/anchorage.

3.20.2.2 Demister pad assembly shall be remotely removable and replaceable through a 10-foot diameter opening from the 56-foot elevation floor, rooms P-0304 and P-0311, which are directly above the black cells P-0106 and P-0117. If the water connections for the spray connections for the spray down mechanism are incorporated into the pad assembly, the connections shall utilize a quick disconnect type connection for the water source. Due to potential radiation and contamination concerns, viewing and removal of the of the demister pad will be accomplished with the top demister pads submerged approximately 6-inch below the water during the maintenance duration. Seller shall demonstrate and record video demister pad removal and replacement in their shop test.

3.20.3 R5/C5 Hot Cell Equipment Maintenance Requirements

3.20.3.1 Reboiler and support frame assemblies and recirculation pumps in the R5/C5 hot cell shall be designed to be remotely removable and replaceable in accordance with specification 24590-WTP-3PS-M000-T0002, *General Specification for Mechanical Handling Equipment Design and Manufacture*. No components shall require special tools.

3.20.3.2 Reboiler and support frame assemblies and recirculation pumps in R5/C5 hot cell shall be designed in accordance with the requirements stated within this specification.

3.20.3.3 Each reboiler and support frame assembly shall not weigh more than 27.5 tons, including all required lifting fixtures.

3.20.3.4 All fittings, pipe connections, electrical power, and control connections for equipment in R5/C5 hot cell shall be engineered on jumpers suitable for remote operation using a crane hook and crane mounted impact wrench with CCTV cameras.

3.20.3.5 Reboiler and support frame assemblies and recirculation pumps shall be made suitable for remote operation utilizing features such as trunnions, guide pins, location dowels, captive bolts, and lead-ins on bolts, and be able to be removed using a crane hook and crane mounted impact wrench with CCTV cameras. Refer to Appendix G for remote impact wrench and drawings nos. 24590-WTP-M0-M10T-00004 and 24590-PTF-M0-PIH-00008 for crane details.

3.20.3.6 The use of shims to position reboiler and support frame assemblies or recirculation pumps in the R5/C5 hot cell is not allowed. All surfaces shall be machined to locate equipment and support remote handling and replaceability.

3.20.3.7 Due to the requirement of a 12-foot reserved path for equipment removal in the hot cell, Seller shall comply with the location requirements for reboiler and support frame assemblies and recirculation pumps as shown in sketches in Appendices I and Q.

3.20.3.8 All services to or from the recirculation pumps shall be provided using jumper connections.

3.20.3.9 The maximum height of any 2-inch hex nut (jumper connector), oriented vertically, is 24 ft-6 inches in plant elevation.

3.20.3.10 The maximum height of any 2-inch hex nut (jumper connector), oriented horizontally, is 25 ft-6 inches in plant elevation.

3.20.3.11 The maximum height of the 2 ton slewing hoist is 28 ft-6 inches.

3.20.3.12 The maximum height and hook approach of the 30 ton hook is distinctly different than the 2 ton hoist. Refer to the crane data sheet, 24590-PTF-MJD-PIH-00001 for details.

3.20.4 Deleted.

4 Materials

4.1 Positive Material Identification

Refer to Buyer's specification 24590-WTP-3PS-G000-T0002, *Specification for Positive Material Identification (PMI)* for PMI requirements. Seller shall submit documentation of all PMI test results which show chemical properties and material classification.

4.2 Construction

4.2.1 Seller shall specify surface finish for all materials and submit to Buyer for review.

4.2.2 Seller shall maintain a record of ASTM numbers, material test reports, and manufacturer material certifications for all materials used for construction of evaporator equipment/skids. Seller shall provide copies to the Buyer.

4.2.3 **For vessels, classification of fabrication materials for bolts and nuts shall be in accordance with ASME Section II. For separator vessels (FEP-SEP-00001A/1B and TLP-SEP-00001), the use of Inconel alloy 625 ASTM B446 material for compression springs of captive bolt assembly on body flange is acceptable since the spring has no safety or pressure retaining function. For skids or structural frames, a**ll stainless steel bolts and studs shall conform to ASTM F593.

4.2.4 All stainless steel nuts shall conform to ASTM F594 **for skids or structural frames**.

4.2.5 Seller shall provide Material Safety Data Sheets (MSDSs) for all materials installed or used.

4.2.6 Process fluids may contain caustic solutions (50 wt % caustic), however 5 M nitric acid solutions may also be used for decontamination of the pipework, pumps, valves, and instruments/instrument tubing both inside and outside of the pipework assembly.

4.2.7 All flanges and pipe fittings shall conform to ASME B31.3 1996 and be weld-neck and long radius type, respectively, unless otherwise specified. Flanges shall also be in accordance with ASME B16.5, and B16.47 Series A, as applicable.

4.2.8 **Except for bolts on separator vessel body flanges and upper lateral support frames,** no threaded flanges or fittings shall be used in the black cells.

4.2.9 Certified material test reports shall be supplied for all stainless steel pipe, plate, sheet, and sections.

4.2.10 Selection of materials for threaded components shall minimize galling. Where the Seller determines that potential for galling is present assuming proper removal and reinstallation, designs shall be considered that favor components that are difficult to replace remotely. The Seller shall also consider different material selection, sleeving, etc. where practical.

4.2.11 All materials used in the construction of the evaporator equipment shall be new and unused. Where specific criteria are not provided, material section shall be determined by the Seller and have properties and composition suitable for the specific service conditions and consistent with this specification and its addenda and attachments.

4.2.12 The alternate ASTM and alternate ASME standard editions listed below can be used in lieu of the specified editions in effect.

Alternate Materials	Specified Materials
ASTM A182-98, A182-01	ASTM A182/A182M-99
ASTM A312-04	ASTM A312/A312M-00c
ASTM A403-95	ASTM A403/A403M-99
ASTM A403-99*	ASME Section II Part A, 2001 Edition 2002 Addenda, SA-403
ASTM A182-98*	ASME Section II Part A, 2001 Edition 2002 Addenda, SA-182
ASME 2001 Edition SA-312, 2003 Addenda SA-312 ASME 1995 Edition SA-312, 1995 Addenda SA-312	ASME Section II Part A, 2001 Edition 2002 Addenda, SA-312
ASME 1998 Edition SA-240, 2003 Addenda SA-240 ASME 1997 Addenda SA-240	ASME Section II Part A, 2001 Edition 2002 Addenda, SA-240
ASTM A240-00, -02, -03, -03c, - 04a	ASTM A240/A240M-03b
ASME SFA 5.22 Part C - 1995 Edition 1996 Addenda	ASME SFA 5.22, Section II, Part C 2001 Edition 2002 Addenda
ASTM A480-03c	ASTM A480-03b

ASTM 554-98, -03	ASTM 554-98el
ASME SFA-5.9, SFA5.22 Sec III, Subsec NB, 1995 Edition, 1996 Addenda	ASME Code, Section II, 2001 Edition with 2002 Addenda (weld wire)
ASME A240-00, -03 /A240-01	ASME A240/A240M-03b

*** only applicable to vessel FEP-VSL-00005**

4.3 Vessels

Vessel materials shall conform to individual MDS in Section 2 of the MR.

4.4 Pipework

Pipework material shall meet the piping material requirements in Buyer's specification 24590-WTP-3PS-P000-T0001, *Specification for Piping Material Classes*.

4.5 Prohibited Materials

4.5.1 Mercury and other low melting point metals, their alloys, or materials containing such metals as their basic constituents shall not be used in the construction of any components of the evaporator systems.

4.5.2 Molybdenum and halides shall not be used in direct contact with stainless steel.

4.5.3 Asbestos shall not be included in any component of the evaporator systems.

4.5.4 Halide containing materials shall not be used in any component of the evaporator systems.

4.5.5 **Polytetrafluoroethylene (PTFE)** or compounds thereof must be qualified for use with the radiation levels specified **in individual equipment MDS or EQDs. No PTFE is allowed to use in the blackcell. The use of PTFE is allowed in the areas where doses are below 1.5E+04 rads. If it is considered impractical to use other gasket materials than PTFE in areas where doses are greater than 1.5E+04 rads, the Seller may propose the use of PTFE with adequate justifications for Buyer's consideration. Justification shall include the replacement parts and schedules to meet the required 40 year life.**

4.6 Storage of Special Materials (e.g., stainless steel) prior to work

4.6.1 The Seller shall meet the storage requirements in Buyer's specification 24590-WTP-3PS-G000-T0003, *General Specification for Packaging, Shipping, Handling, and Storage Requirements*.

4.6.2 Stainless steel is susceptible to corrosion caused by the contact and interaction with incompatible materials. All stainless steel material shall be stored in separate areas away from other materials.

5 Fabrication

The Seller shall obtain written Final Design Review from the Buyer prior to the start of fabrication activities.

5.1 General

5.1.1 Fabrication of vessels shall be performed in accordance with Buyer's specification 24590-WTP-3PS-MV00-T0001, ***Engineering*** *Specification for Pressure Vessel Design and Fabrication.*

5.1.2 Fabrication of pipework shall be performed in accordance with Buyer's specification 24590WTP-3PS-PS02-T0001, ***Engineering*** *Specification for Shop Fabrication of Piping.*

5.1.3 Fabrication of mechanical handling equipment shall be performed in accordance with Buyer's specification 24590WTP-3PS-M000-T0002, *General Specification for Mechanical Handling Equipment Design and Manufacture.*

5.1.4 All fabrication shall be performed by personnel qualified in accordance with this specification and applicable documents in Section 2 of this specification.

5.1.5 **The welding, thermal treatment, examination, and testing for shop fabrication of structural welded materials and shapes shall be in accordance with Buyer's specification 24590-WTP-3PS-SS00-T0002, *Engineering Specification for Welding of Structural stainless Steel and Welding of Structural Carbon Steel to Structural Stainless Steel.***

5.2 Welding

5.2.1 Seller shall develop detailed welding, weld inspection, NDE, and weld repair procedures for fabrication of the evaporator vessel, equipment, and structural supports. Seller shall submit them to the Buyer for review prior to fabrication. Procedures shall include acceptance criteria. The procedures shall conform to the following, as applicable:

- Buyer's Specification 24590-WTP-3PS-SS00-T0002
- Buyer's Specification 24590-WTP-3PS-NWP0-T0001
- Buyer's Specification 24590-WTP-3PS-MVB2-T0001
- ASME Boiler and Press Vessel Code, Section VIII, Div. 1
- ASME B31.3-1996
- AWS D1.6
- AWS D9.1

5.2.2 Welding, weld inspection, NDE, and weld repair shall be carried out in accordance with the applicable procedures developed per Section 5.2.1 above.

5.2.3 Each procedure shall be prepared and qualified in accordance with the requirements of the listed specification and standards in 5.2.1 above or ASME Section IX, whichever is more stringent.

5.2.4 Welder qualifications shall be performed in accordance with ASME Section IX or AWS as required.

5.2.5 Personnel performing weld inspection shall be qualified in accordance with ASME Boiler and Pressure Vessel Code, Section VIII, Div. 1 and Buyer's specification 24590-WTP-3PS-SS00-T0002, *Specification for Welding of Structural Stainless Steel and Welding of Structural Carbon Steel to Structural Stainless Steel.*

5.2.6 Repairs required as a result of weld rejection by either the Buyer's or Seller's final inspection shall be fully documented in accordance with Seller's Quality Assurance Program (QAP). Weld repairs shall be performed in accordance with ASME Boiler and Pressure Vessel Code, Section VIII. Weld repair records shall be included with Seller's quality verification document package to be submitted to Buyer.

6 Inspections and Examinations

6.1 Nondestructive Examinations

6.1.1 Unless otherwise specified, all vessel welds shall be inspected in accordance with the requirements outlined in the Buyer's specification 24590-WTP-3PS-MV00-T0001, *Specification for Pressure Vessel Design and Fabrication.*

6.1.2 Unless otherwise specified all pipework welds shall be inspected in accordance with the requirements outlined in Buyer's specification 24590-WTP-3PS-PS02-T0001, *Specification for Shop Fabrication of Piping.* For nondestructive examination (NDE) of fabricated pipe welds. Appendix O of this evaporator specification, 24590-PTF-3PS-MEVV-T0001, shall be used in replacement of Appendix A of specification for Shop Fabrication of Piping, 24590-WTP-3PS-PS02-T0001.

6.1.3 **Unless otherwise specified, all structural frames/supports shall be inspected in accordance with the requirements outlined in Buyer's specification 24590-WTP-3PS-SS00-T0002, *Engineering Specification for Welding of structural stainless steel and welding of structural carbon steel to structural stainless steel.***

6.2 Dimensional Inspections

6.2.1 Refer to Buyer's specification 24590-WTP-3PS-PP00-T0002, *Specification for Dimensional Record Program*, for final dimensional measurement requirements. Third party validation of special dimensional inspection is not required.

6.2.2 Buyer's specification 24590-WTP-3PS-PP00-T0002, *Specification for Dimensional Record Program*, is applicable only to recirculation pumps and reboiler and support frame assemblies and does not apply to any other components.

6.2.3 For recirculation pumps, a dimensional record is required for remotable pump features that are not part of the process jumper. The process portion of the recirculation pump will be installed in a jumper, and the jumper dimensional record will be performed by the Buyer.

6.2.4 For reboilers, all remote connector nozzles shall be measured to precise as-built dimensions.

6.2.5 Seller shall furnish personnel to perform measurement activities.

6.3 Visual Weld Inspections

6.3.1 The Seller shall develop and implement a procedure to perform visual weld inspections (visual tests, VT) to inspect each weld. The inspection procedure shall be developed in accordance with Buyer's specification 24590-WTP-3PS-MVB2-T0001, *Specification for Welding Pressure Vessels, Heat Exchangers and Boilers* and ASME B31.3 1996, and shall include inspection materials and acceptance criteria.

6.3.2 Acceptance criteria for visual weld inspections for vessels shall be in accordance with Buyer's specification 24590-WTP-3PS-MVB2-T0001, *Specification for Welding Pressure Vessels, Heat Exchangers and Boilers* and for pipework shall be in accordance with ASME B31.3 1996.

6.3.3 The Seller shall prepare a visual weld inspection report for each fabricated item.

6.3.4 Deleted.

6.3.5 Deleted.

6.3.6 The Seller shall notify the Buyer in advance of inspections. The Buyer may send representatives to witness inspections or perform independent inspections.

6.4 Liquid Penetrant Test

6.4.1 The Seller shall develop and implement a procedure to perform a liquid penetrant test (PT) to inspect each weld. The procedure shall be developed in accordance with Buyer's specification 24590-WTP-3PS-MVB2-T0001, *Specification for Welding Pressure Vessels, Heat Exchangers and Boilers* and ASME B31.3 1996, and shall include inspection materials, dwell time for dye and developer, and acceptance criteria.

6.4.2 Acceptance criteria for PT inspection shall be in accordance with Buyer's specification 24590-WTP-3PS-MVB2-T0001, *Specification for Welding Pressure Vessels, Heat Exchangers and Boilers* and for pipework shall be in accordance with ASME B31.3 1996.

6.4.3 The Seller shall prepare a liquid penetrant test report for each weld connection on each fabricated item.

6.4.4 Deleted.

6.4.5 Deleted.

6.4.6 The Seller shall notify the Buyer in advance of testing. The Buyer may send representatives to witness testing or perform independent tests.

6.5 Radiography

6.5.1 Radiographic examinations shall be carried out on all primary **confinement** pipework butt-welds using 100 % radiography for Q components. For all other quality levels, refer to Appendix O of this specification for radiographic examination requirements.

6.5.2 The Seller shall develop and implement a procedure to perform radiographic weld examinations of piping butt-welds. The procedure shall be developed in accordance with ASME B31.3 1996, and shall include examination materials and acceptance criteria.

6.5.3 Deleted.

6.5.4 Deleted.

6.5.5 The Seller shall provide radiographic film with technique and reader sheets. Exposed film must be sent, along with a copy of the technique and reader sheets in accordance with Section 3 of the MR. Film must be suitably packaged to preclude moisture and handling damage.

6.5.6 The Seller shall notify the Buyer in advance of examinations. The Buyer may send representatives to witness or perform independent examinations.

6.6 Magnetic Particle Examination

6.6.1 The Seller shall develop and implement a procedure to perform magnetic particle examination. The procedure shall be submitted to the Buyer for review prior to fabrication.

6.6.2 Magnetic particle examination (MT) shall be in accordance with ASTM Specification E709.

6.6.3 Welds specified under AWS D1.1 will be evaluated and accepted under criteria of AWS D1.1 Table 6.1.

6.7 Final Inspection

6.7.1 The Seller shall develop and implement a procedure for final inspection of each fabricated item. The inspections shall be performed after completion of all fabrication, cleaning, and testing, and just prior to final packaging. The inspections shall include inspection of all surfaces for contamination. Visible evidence of contamination is not acceptable.

6.7.2 The Seller shall prepare a final inspection report for each item, which documents the results of the final inspection. The Seller shall include the final inspection report in the documentation package for each piece.

6.8 Inspection and Test Status

The Seller shall maintain a positive system for identifying inspection and testing status of items and systems.

6.9 Control of Nonconforming Items

The Seller shall use the Supplier Deviation Disposition Request per MR Section 2 to notify the Buyer of fabricated items and fabrication activities not conforming to the requirements. Any nonconforming work shall be redone by the Seller at Seller's cost.

7 Testing

7.1 Shop Tests

7.1.1 The Buyer reserves the right to witness all shop tests and shall be given a minimum of 10 working days written notice prior to each test date.

7.1.2 All pipework shall be hydrostatically tested in accordance with ASME B31.3 1996. Test water used for hydrostatic testing shall be tested for chlorides. The chloride content of the test water shall not exceed 50 ppm and the water temperature shall not exceed 120 °F. Buyer shall review all test pressures prior to commencement of any testing. The testing results shall be documented and provided to Buyer.

7.1.3 Testing of vessels shall be performed in accordance with Buyer's specification 24590-WTP-3PS-MV00-T0001, *Specification for Pressure Vessel Design and Fabrication*.

7.1.4 Functional tests of evaporator equipment/skids shall be performed by the Seller. If the antifoam agitator is tested by the fabricator prior to shipment to the vessel shop, then functional test of the antifoam tank/agitator assembly as a unit is not required.

7.1.5 Seller shall demonstrate and record video demister pad removal. Test shall be done with equipment representative of what will actually be installed and utilized in the Buyer's facility.

7.1.6 Seller will furnish lifting yokes details for separator vessels, reboiler and support frame assemblies, and recirculation pumps. All Seller supplied lifting yokes shall be load tested to 1.5 times the design load.

7.1.7 Each evaporator equipment skid shall be lift tested by the Seller to demonstrate proper vertical orientation using the Seller-supplied tooling and fixtures. This testing includes verification of all tilt up features. During the lift test the deflection at the midpoint of each skid shall be monitored and recorded to ensure that proper alignment is maintained. The centerline of the evaporator skid shall be within ±1 inch of true vertical when measured from the lift point. Permanent deflection or a change in the evaporator skid alignment is unacceptable.

7.1.8 Seller shall furnish blind flanges or other acceptable closures for the nozzles, as required for hydrotesting. Closures shall be removed after testing, unless they are required for shipment.

7.1.9 Deleted.

7.1.10 All test results shall be documented, certified, and submitted to the Buyer for review.

7.2 Deleted.

8 Preparation for Shipment

8.1 General Requirements

8.1.1 The evaporator equipment/skids shall be packaged/prepared for shipment, handled, and stored in accordance with the following requirements in

- Section 7 of the MR.
- Buyer's Specification 24590-WTP-3PS-G000-T0003, *General Specification for Packaging, Shipping, Handling, and Storage Requirements.*
- Buyer's Specification 24590-WTP-3PS-PS02-T0001, *Specification for Shop Fabrication of Piping.*
- Buyer's Specification 24590-WTP-MV00-T0001, *Pressure Vessel Design and Fabrication.*

8.1.2 Seller shall ensure that appropriate documentation is prepared and, if required, signed by the appropriate person(s). The shipping documentation shall accurately reflect specific traceability to the items being shipped.

8.1.3 Seller shall ensure that appropriate documentation is prepared for the evaporator equipment/skids. At a minimum, documentation shall include the following information, as applicable:

- Manufacturer name, model number, and serial number.
- Skid number.
- Plant item number.

8.1.4 Solvents and cleaning solutions used on stainless steel shall have a halogen content of less than 200 ppm.

8.1.5 Recirculation pumps will be shipped only in temporary shipping skids not meant for installation. The reboiler and support frame assemblies shall be transported from the Seller site to the Buyer site in the horizontal orientation due to air lock size limits.

8.1.6 Separator vessels will be shipped on temporary shipping skids. The installation skids are shipped separately, each in two pieces because of their height.

8.1.7 Lifting weight shall be clearly marked on both the equipment skid and its shipping documentation.

8.1.8 Regarding Buyer's Specification 24590-WTP-3PS-PS02-T0001, *Specification for Shop Fabrication of Piping,* polyethylene wrap can be used for off-gas piping pieces and subsequent blocking using Styrofoam cushioning and equivalent backed by plywood/wood to provide protection against damage or access by elements. Special end caps are not required.

8.2 Painting

8.2.1 Stainless steel shall not have coating applied.

8.2.2 Seller shall submit the information requested on Form H (see appendix S) along with technical data sheet and MSDS. Supplier shall provide Certificate of Conformance verifying application of coating in compliance with coating manufacturer's Technical Product Data Sheet.

8.2.3 All painting and coating shall be applied in accordance with the manufacturer's directions for application.

8.2.4 Exposed carbon steel surface shall be primed and painted with enamel base coating in accordance with the coating manufactures surface and application requirements. All visible oil, grease, dust, dirt, mill scale, rust, coating, oxides, corrosion products and other foreign matter shall be removed prior to application of primer. See Sections 8.2.14 and 8.2.15 for custom fabricated equipment.

8.2.5 In the absence of standard manufacturer's colors, the finish coat of all carbon steel items and equipment shall be ANSI 70 Gray. Contrasting colors shall be used for fasteners and bails.

8.2.6 Repainting by the Seller, or custom finishing by the manufacturer shall not be required when commercially available components and equipment which are normally mass produced, inventoried, supplied from stock, and have been coated with the manufacturer's standard coating system.

8.2.7 Surfaces exposed to the environment, but inaccessible after assembly, shall be coated prior to assembly.

8.2.8 Painting of interior and enclosed surfaces of the equipment, such as inside a welded box section, is not required.

8.2.9 Machined carbon steel mating surfaces and other surfaces not protected by coating system (such as seal surfaces, threaded surfaces, lifting hooks, hook nuts, wheel treads, gears, shafts, pinions, and couplings), shall be protected with a solvent cutback asphalt temporary preservative (Dauber Chemical Tectyl 891, EF Houghton Chemical Rust Veto 342 or Buyer's accepted equivalent) for shipment and storage. The Seller shall specify which preservatives must be removed and how the preservatives are removed by the Buyer before operation of the equipment.

8.2.10 Welds shall be coated only after completion of the required tests. Required tests include leak tightness, hydrostatic testing or other NDE of the welds.

8.2.11 Filler, sealant, and caulking compounds shall be compatible with the coating system.

8.2.12 The lifting fixtures for separator vessel shall be safety yellow # 13655 in accordance with FEP-STD 595B, *Colors Used in Government Procurement*. The lifting fixtures can be coated with the manufacturer's standard coating systems.

8.2.13 Items covered by 8.2.14 and 8.2.15, shall be surface prepared in accordance with SSPC SP10. For repair, the surfaces shall be prepared in accordance with SPPC SP11.

8.2.14 For support frames for steam conditioning skids and reboiler transporter, Seller shall use two coats of **High Build** Epoxy with 4-6 mils per coat. Acceptable coating products for **High Build Epoxy** are as follows:

8.2.14.1 Amercoat 385 from Ameron

8.2.14.2 Carboguard 890 from Carbonline

8.2.14.3 224HS from Devoe

8.2.14.4 Protecto-Coat 330 or 300 from Dudick

8.2.14.5 Intergard 475HS from International

8.2.14.6 Macropoxy 646 from Sherwin Williams

8.2.15 For reboiler and recirculation pump lifting beams, Seller shall use three coats with 1st coat of **Organic Zinc** Epoxy Primer with 3-5 mils and Epoxy Novolac with 5 - 10 mils for 2nd and 3rd coats. Acceptable coating products for **Organic Zinc Epoxy Primer** are as follows:

8.2.15.1 Amercoat 68HS from Ameron

8.2.15.2 Carbozinc 859 from Carbonline

8.2.15.3 313 from Devoe

8.2.15.4 Interzinc 52 from International

8.2.15.5 Zinc Clad IV from Sherwin Williams

Acceptable coating products for **Epoxy Novolac** are as follows:

8.2.15.6 Amercoat 91 from Ameron

8.2.15.7 Phenoline 1205 FR from Carbonline

8.2.15.8 253 from Devoe

8.2.15.9 Protecto-Coat 100XT or EN from Dudick

8.2.15.10 Intertherm 875 HS from International

8.2.15.11 Macropoxy 646 from Sherwin Williams

8.3 Tagging

8.3.1 Tagging of the evaporator component, equipment, and skids shall be per this specification and the applicable documents listed in Section 2 of this specification. Plant item numbers for evaporator component/equipment shall be per the data sheets that are in Section 2 of the MR.

8.3.2 Instruments shall have nameplates installed per Section 8 of Buyer's specification 24590-WTP-3PS-JQ07-T0001, *Engineering Specification for Instrumentation for Package Systems*.

8.3.3 Motors shall have nameplates per Section 3 of Buyer's specification 24590-WTP-3PS-MUMI-T0002, *Engineering Specification for Low Voltage Induction Motors.*

8.3.4 Packages shall be suitably marked on the outside to facilitate identification of the purchase order, the procurement specification, the package contents, and any special handling instructions.

8.3.5 Slinging points and orientation for storage shall be clearly marked.

8.3.6 Temporary material such as bolting and shipping material shall have clear identification per Sections 3.13 and 3.13.12 of Buyer's specification 24590-WTP-GPP-GCB-00100, *Field Materials Management.*

8.3.7 A stainless steel nameplate shall be rigidly attached to the evaporator equipment skid packages in a prominent position for ease of visibility, and shall include the following:

- Manufacturer's name.
- Shop location.
- Date of manufacture.
- Serial number.
- Skid number.
- Weight of assembly.
- Purchase order number.

9 Quality Assurance

9.1 General Commercial Designation (CM) Requirements

9.1.1 The Seller's Quality Assurance Program (QAP) Requirements are included in 24590-WTP-3PS-G000-T0001, *Supplier Quality Assurance Program.*

9.1.2 Seller's QAP Manual shall be submitted to buyer for review in accordance with 24590-WTP-3PS-G000-T0001, *Supplier Quality Assurance Program.*

9.1.3 Seller's QAP, as a minimum, shall contain the requirements of DOE Order 414.1A as detailed in the Supplier Quality Assurance Program Requirements Data Sheets listed in Section 2 of the MR. The very same requirements shall be passed down to any lower tier subcontractor.

9.2 Quality Level (Q) Requirements

9.2.1 Seller shall have in place a QA program meeting the requirements marked as applicable in Supplier Quality Assurance Program Requirements Data Sheet attached to the MR, and Buyer's specification 24590-WTP-3PS-G000-T0001.

9.2.2 Seller shall demonstrate that its quality program is in compliance with the procurement quality requirements listed in the Supplier Quality Assurance Program Requirements Data Sheet. The Supplier shall allow the Buyer, its agent, and DOE access to their facilities and records pertaining to this purchase order for the purpose of QA Audits and Surveillance at mutually agreed times.

9.2.3 All items shall be manufactured in accordance with the Supplier's Quality Assurance Program that has been previously evaluated and accepted by the RPP-WTP Quality Organization. The very same requirements shall be passed down to any lower tier subcontractor.

9.2.4 Seller shall submit their QA program and work plan to Buyer for review prior to commencement of work. The plan shall include documents and procedures to

implement the work and include a matrix of essential Quality Assurance elements cross referenced with the documents/procedures.

10 Configuration Management

Equipment and/or components covered by this specification are identified with Plant Item Numbers shown in the attached data sheets in Section 2 of the MR. Each item shall be identified in accordance with Section 8.3 of this specification.

11 Documentation and Submittals

11.1 General

11.1.1 Seller shall submit to Buyer all detailed designs, drawings, documentation, procedures, instructions, calculations, analyses, manufacturer documentation, manufacturer data, inspection reports, test reports, certifications, certificates, manuals, MSDSs, video tapes, and drawings required per this specification, the applicable codes, standards, and reference documents in Section 2 of this specification, and the MR.

11.1.2 All detailed designs, drawings, assembly drawings, shop drawings, final P&IDs, MDSs, supporting calculation, supporting analyses, and all other requirements in the 60 % design stage shall be issued to the Buyer for review prior to fabrication of evaporator vessels and equipment.

11.1.3 Seller shall submit to Buyer Engineering and Quality Verification documents in the forms and quantities shown in Form G-321-E, *Engineering Document Requirements*, and Form G-321-V, *Quality Verification Document Requirements* attached to the MR, Section 3.

11.1.4 Seller shall submit a report identifying any deviations and/or conflicts per Section 2 of the MR to the Buyer for review.

11.1.5 Each documentation transmittal package shall have a documentation inventory sheet attached listing all documents and the number of pages each.

11.1.6 All documents submitted for review (e.g., General Arrangement, Shop Details, Calculations must contain their own unique NAME AND IDENTIFICATION NUMBER) Example:

Calculations for Item:
Document No: Calc TLP-PMP-00001-0001

11.1.7 Data sheets in Section 2 of the MR shall be marked up by the Seller and submitted to the Buyer for review with the detailed design. Seller shall fill in all information that is marked as asterisk or TBD and markup actual overall

dimensions for each evaporator component, equipment, and skid based on the detailed design.

11.1.8 All drawings shall be produced per the drawing practices set forth in ASME Y14.100, Engineering Drawing Practices.

11.2 Calculations

- All **engineering analyses and** calculations provided **as supplier submittals** shall be **in accordance with Buyer's specification 24590-WTP-3PS-G000-T0014, Supplier Design Analyses.**

Design Stress/Seismic Reports shall provide, as a minimum, the following information:

11.2.1 ANSI/AISC N690 Steel Frame / Support Designs

For Finite Element Analysis (FEA) by Computer Program, submit the **basis,** or reference to the **basis** that supports applicability of the computer program to the specific physical problem being solved. (i.e; application /validation to steel code formulas and allowable stresses)

11.2.2 ASME VIII, Div 2, Appendix 4, Vessel including internal supports/components

For FEA Computer Program analysis, submittal for the **basis,** or reference to the **basis** supporting application of the computer program to the specific physical problem being solved. (i.e; application/validation to the ASME VIII, Div 2, Appendix 4, Maximum Shear Stress Theory.)

11.2.3 ASME B31.3 Piping Design

For FEA Computer Program analysis, submittal for the **basis,** or reference to the **basis** supporting application of the computer program to the specific physical problem being solved. [i.e; application/validity to the ASME B31.3 design requirements in accordance with B31.3-96, Section 300(c)(3)]

11.3 As-Built Drawings

11.3.1 Progress As-Builts

During construction, the Seller shall keep an updated marked-up set of progress as-built drawings on the jobsite as an accurate record of all deviations between the work, as shown on the Buyer reviewed drawings, and work as fabricated. These drawings shall be available to the Buyer for inspection at any time during regular business hours.

11.3.2 Final As-Builts

Seller shall furnish to Buyer final as-built drawings with AS-BUILT clearly printed on each sheet for all final work left in place. Seller shall accurately and neatly transfer all deviations from progress as-builts to final as-builts.

11.4 Dimensional Record Drawings

See 24590-WTP-3PS-PP00-T0002 for final dimensional measurement requirements. Third party validation of special dimensional inspection is not required. Seller shall furnish to Buyer dimensional record drawings for reboiler and support frame assemblies, and recirculation pumps with all their associated lifting yokes and/or lifting lugs.

11.5 Project Start

Seller shall submit drawing index and detailed schedule of engineering document submittals, material purchases, fabrication, shop test, and ready for shipment. Include bar charts or critical path method diagrams, which detail the chronological sequence of activities.

11.6 30 % Design Review

11.6.1 Provide drawings with outline dimensions, services, foundations, and mounting details of all three (3) evaporator systems. Drawings shall show external envelope, including lugs, centerline(s), location and size for electrical cable, conduit, fluid, other service connections, isometrics, and details related to foundations and mountings.

11.6.2 Provide preliminary dimension, location, and layout for all evaporator component, equipment, and skids.

11.6.3 Provide preliminary design of the demister pads replacement methodology.

11.6.4 Provide preliminary system description. Describe general system functions and basis of design. It shall include a systematic process flow diagram for system operation.

11.6.5 Provide preliminary Piping and Instrumentation Diagrams (P&IDs).

11.6.6 Provide preliminary instrument control requirements. Include system interlocks and control philosophy. Provide flow charts, schematics, logic diagrams, or function diagrams showing the equipment functional controls.

11.6.7 Provide document that describes the proposed equipment skids, including sketches of typical skids indicating skid-to-skid and skid-to-building interfaces, as well as the components included.

11.6.8 Identify all large and heavy items of equipment to ensure lifting capability during construction, maintenance, and decommissioning.

11.6.9 Provide preliminary electrical drawings, schematics, wiring drawings, and motor data sheets per Buyer's specifications 24590-WTP-3PS-MUMI-T0002 and 24590-WTP-3PS-EKP0-T0001.

11.6.10 Provide preliminary calculations as applicable

11.7 60 % Design Review

11.7.1 Provide final P&IDs.

11.7.2 Provide final skid constructability study.

11.7.3 Provide final evaporator component, equipment, skid size, and layout.

11.7.4 Provide assembly drawings.

11.7.5 Provide shop detail drawings with sufficient detail to facilitate fabrication, manufacture, or installation. This includes a complete Bill of Materials (BOM), pipe spool drawings, internal piping and wiring details, cross-section details, and structural details.

11.7.6 Provide wiring diagrams including schematic diagrams, equipment internal wiring diagrams, and interconnection wiring diagrams for electrical items.

11.7.7 Submit completed Instrument and Mechanical data sheets for all instruments and equipment, utilizing Buyer's supplied instrument data sheet samples attached in Section 2 of the MR as templates.

11.7.8 Provide functional test setpoints and recommended operating set points for the instrumentation and control packaged systems.

11.7.9 Provide final instrument control requirements including control loop definitions, system interlocks, alarms, and control philosophies. Control and sequencing requirements of the system and its components shall be detailed as described in Section 3.5 of 24590-WTP-3PS-JQ07-T0001, *Engineering Specification for Instrumentation for Package Systems*.

11.7.10 Submit all final detailed drawings, calculations, analyses, and information necessary for evaporator vessels and equipment fabrication.

11.7.11 Submit all FMEA documentation.

11.7.12 Provide final electrical drawings, schematics, wiring drawings, motor data sheets, nameplates per Buyer's specifications 24590-WTP-3PS-MUMI-T0002 and 24590-WTP-3PS-EKP0-T0001.

11.7.13 Provide calculations as applicable.

11.8 90 % Design Review

11.8.1 Provide detailed written procedures, instructions, and drawings (including all lifting requirements) for evaporator system erection/installation.

11.8.2 Provide complete remote installation instructions for the utilization of the hot cell existing cranes for the needed reorientation, installation, and extraction of the reboiler.

11.8.3 Provide instrument installation details.

11.8.4 Provide list of required spares.

11.8.5 Provide startup and commissioning spares list, including all components or equipment that may be needed during startup and commissioning.

11.8.6 Provide operation manuals with detailed written instructions describing how the evaporator systems and components should be operated. Manuals shall include specific instructions, procedures, and illustrations for the following:

11.8.6.1 Safety Precautions – List personnel hazards and equipment or product safety precautions for all operating conditions.

11.8.6.2 Operator Prestart – Include requirements to set up and prepare each system for use.

11.8.6.3 Start-up, Shutdown, and Post-shutdown Procedures – Include a control sequence for each of these operations.

11.8.6.4 Normal Operations – Include control diagrams with data to explain operation and control of systems and specific equipment.

11.8.6.5 Emergency Operations – Include emergency procedures for equipment malfunctions to permit a short period of continued operation or to shut down the equipment to prevent further damage to systems and equipment. Include emergency shutdown instructions for fire, over-pressure, spills, or other foreseeable contingencies. Provide guidance on emergency operations of all utility systems including valve locations and portions of systems controlled.

11.8.6.6 Operator Service Requirements – Include instructions for services to be performed by the operator, such as lubrication, adjustments, and inspections.

11.8.6.7 Environmental Conditions – Include a list of environmental conditions (temperature, humidity, and other relevant data) which are best suited for each product or piece of equipment and describe conditions under which equipment should not be allowed to run.

11.8.6.8 Lay-up Instructions – Include step-by-step instructions for lay-up.

11.8.7 Provide maintenance manuals with detailed written instructions to disassemble, reassemble, and maintain systems or components in an operating condition. Manuals shall include specific instructions, procedures, and illustrations for the following phases of maintenance:

11.8.7.1 Preventive Maintenance - Include the following information for preventive and scheduled maintenance to minimize corrective maintenance and repair:

11.8.7.1.1 Lubrication Data – Include lubrication data, other than instructions for lubrication, in accordance with operator service requirements to be included in operation manuals.

11.8.7.1.2 Preventive Maintenance Plan and Schedule – Include manufacturer's schedule for routine preventive maintenance, inspections, testing, and adjustments required to ensure proper and economical operation and to minimize corrective maintenance and repair. Provide manufacturer's projection of preventive maintenance frequency of work, and hours to complete the task. Provide surveillance and in-service inspection recommendations.

11.8.7.2 Corrective Maintenance – Include manufacturer's schedule for procedures and instructions for correcting problems and making repairs. Include the following information for performing corrective maintenance:

11.8.7.2.1 Troubleshooting Guide and Diagnostic Techniques – Include step-by-step procedures to promptly isolate the cause of typical malfunctions. Describe clearly why the checkout is performed and what conditions are to be sought. Identify tests or inspections and test equipment required to determine whether parts and equipment may be reused or require replacement.

11.8.7.2.2 Wiring Diagrams and Control Diagrams – Wiring diagrams and control diagrams shall be point-to-point drawings of wiring and control circuits including factor-field interfaces. Provide a complete and accurate depiction of the actual job specific wiring and control work. On diagrams, number electrical and electronic wiring and pneumatic control tubing, as well as the terminals for each type, identical to actual installation numbering.

11.8.7.2.3 Maintenance and Repair Procedures – Include instructions and list tools required to restore product or equipment to proper condition or operating standards.

11.8.7.2.4 Removal and Replacement Instructions – Include step-by-step procedures and list required tools and supplies for removal, replacement, disassembly, and assembly of components, assemblies, subassemblies,

accessories, and attachments. Provide all tolerances, dimensions, settings, and adjustments required. Instructions shall include a combination of text and illustrations.

11.8.7.2.5 Recommended Spare Parts and Supply Lists – Include list of spare parts and supplies required for maintenance and repair to ensure continued service or operation without unreasonable delays. Include the cost of each item.

11.8.7.2.6 MSDSs – Include MSDSs for all chemicals and hazardous materials supplied as part of the product, system, or equipment. In addition, include MSDSs for all chemicals and hazardous materials required to be added (lubricants, antifreeze, etc.).

11.8.7.2.7 Parts Identification – Provide identification and coverage for all parts of each component, assembly, subassembly, and accessory of the end items subject to replacement. Include special hardware requirements, such as requirement to use high-strength bolts and nuts. Identify parts by make, model, serial number, and source of supply to allow reordering without further identification. Provide clear and legible illustrations, drawings, and exploded views to enable easy identification of the items. When illustrations omit the part numbers and description, both the illustration and separate listing shall show the index, reference, or key number which will cross-reference the illustrated part to the listed part. Parts shown in the listings shall be grouped by components, assemblies, and subassemblies.

11.8.7.2.8 Other than Seller's Commercial Practice – End item manufacturer may add a cross-reference to implement component assemblies and parts requirements when implementation in manual form varies significantly from the style, format, and method of Seller's standard commercial practice.

11.8.7.2.9 Warranty Information – List and explain the various warranties and include the servicing and technical precautions prescribed by the Seller or contract documents to keep warranties in force.

11.8.7.2.10 Personnel Training Requirements – Provide information available from the Seller to use for training designated personnel to operate and maintain the equipment and systems properly.

11.8.7.3 Calibration Testing Equipment and Special Tool Information – Include information on test equipment required to perform specific tests and on special tools needed for the operation, maintenance, and repair of components.

11.8.8 Provide system, component, and instrumentation descriptions as identified below:

11.8.8.1 System Descriptions - Include comprehensive system description describing, in detail, how the overall system functions, and the basic design basis. Include component interfaces and interactions. Provide a systematic process flow diagram for system operation.

11.8.8.2 Component Descriptions – Include comprehensive component descriptions describing, in detail, how each individual process component functions and the basic design basis. Include other component interfaces and interactions. Provide a systematic process flow diagram for component operation.

11.8.8.3 Instrument Descriptions – Include a list or table describing instrument ID number, ID name, location, and basic operating function. Include separately, in systematic descriptive detail, instrument controls and logic that correspond to instrumentation and logic diagrams.

11.8.9 Provide design and operational requirements per the following:

11.8.9.1 Design requirements – Include a list or table describing the maximum design limits and conditions required to safely operate the equipment (i.e., temperatures, pressures, etc.).

11.8.9.2 Operational requirements – Include a list or table describing the normal operating ranges for equipment (i.e., temperatures, pressures, etc.).

11.8.10 Provide analysis and design reports, including analytical data (stress, electrical loading, fluid dynamics, etc.) which demonstrates that an item satisfies all specified requirements.

11.8.11 Provide seismic analysis or test data reports providing data and demonstrating suitability of materials, components, or systems in relation to the conditions imposed by the stated seismic criteria.

11.8.12 Provide thermal stress analysis or test data reports providing data and demonstrating suitability of materials, components, or systems in relation to the conditions imposed by thermal stresses.

11.8.13 Provide site storage and handling manuals including the requirements and time period for lubrication, rotation, heating, lifting, or other handling requirements to prevent damage or deterioration during storage and handling at job site. Include return shipping instructions.

11.8.14 Provide inspection and test plan including detailed descriptions of the inspections and tests planned during the receipt, manufacturing, and conformance verification activities. Include identification of witness and hold points.

11.8.15 Provide welding procedures, specifications, and supporting qualification records required for welding, hard facing, overlaying, brazing, and soldering.

11.8.16 Provide material control procedures including controlling issuance, handling, storage, and traceability of materials such as weld rod.

11.8.17 Provide PMI procedures for performing PMI testing of materials.

11.8.18 Provide repair procedures including controlling material removal and replacement by welding, brazing, etc., subsequent thermal treatments, and final acceptance inspection.

11.8.19 Provide pressure testing procedures including hydro, air, leak, separation, or vacuum test procedures for performing hydrostatic or pneumatic structural integrity and leakage tests.

11.8.20 Provide inspection procedures for the purpose of determining that specified requirements (i.e., dimensions, properties, performance results, etc.) are met.

11.8.21 Provide radiographic testing procedures for identifying the presence and certain characteristics of discontinuities and inclusions in materials by x-ray or gamma ray exposure of photographic film.

11.8.22 Provide liquid penetrant testing procedures for detection of surface discontinuities in materials by application of a penetrating liquid in conjunction with suitable developing techniques.

11.8.23 Provide functional shop test procedures to demonstrate that design function and operational parameters are met (e.g., pump performance data, valve stroking, load, temperature rise, calibration, environment, etc.).

11.8.24 Provide test requirements document per engineering specifications to demonstrate design function and operational parameters **(including a full simulation of abnormal shutdown conditions)** for the complete assembled evaporator systems.

11.8.25 Provide electrical test procedures to demonstrate that design function and operational parameters are met (e.g., impulse, overload, continuity, voltage, temperature rise, calibration, saturation loss, etc.).

11.8.26 Provide shipping preparation procedures for cleaning, packaging, and handling.

11.9 Final Design Review

Provide final design report including all design documents, manuals, and drawings that are specified in this specification. All procedures and instructions shall be completed and submitted to the Buyer a minimum of eight (8) weeks prior to evaporator components, equipment, and skid shipment.

APPENDIX A

WASTE FEED EVAPORATOR STREAM DATA

Stream Description	Evaporator Feed	Evaporator Concentrate	Process Condensate
Specific Gravity	1.050882E+00	1.197295E+00	1.000072E+00
pH	1.227066E+01	1.305375E+01	9.325531E+00
Total Volume (gpm)	1.962454E+01	3.234591E+00	1.710009E+01
Total Mass (lb/hr)	1.030370E+04	1.934908E+03	8.544156E+03
Na Molarity	8.231085E-01	5.000000E+00	3.116202E-05
Activity (Ci/gallon)			
129-I	1.070549E-07	6.456333E-07	7.335298E-10
134-Cs	6.794152E-06	4.120906E-05	2.202542E-09
137-Cs	1.531654E-01	9.292679E-01	1.866905E-09
14-C	4.343208E-06	2.632459E-05	4.923495E-09
126-Sn	3.687065E-07	2.235285E-06	3.195409E-10
233-U	7.147865E-07	4.333113E-06	6.729994E-10
235-U	5.308471E-09	3.218466E-08	4.216552E-12
152-Eu	1.787821E-06	1.083834E-05	1.612622E-09
154-Eu	1.047067E-04	6.347777E-04	9.210747E-08
155-Eu	2.783818E-05	1.688275E-04	1.307200E-08
237-Np	1.743947E-07	1.057294E-06	1.462592E-10
238-Pu	1.558783E-06	9.457271E-06	1.600678E-13
239-Pu	2.427044E-05	1.472509E-04	1.683651E-12
240-Pu	6.791157E-06	4.120253E-05	7.334047E-13
241-Am	1.539731E-04	9.341677E-04	4.075735E-11
243-Am	5.791005E-05	3.513452E-04	7.425120E-12
242-Cm	2.927004E-07	1.774511E-06	2.511805E-10
241-Pu	5.791005E-05	3.513452E-04	7.425120E-12
243-Cm	4.125221E-08	2.501032E-07	3.356803E-11
244-Cm	8.401929E-07	5.093914E-06	6.825013E-10
3-H	1.025165E-05	2.637668E-05	6.775766E-06
60-Co	1.897588E-06	1.150925E-05	6.773841E-10
90-Sr	2.251101E-02	1.365762E-01	1.437153E-09
99-Tc	5.315124E-04	3.223320E-03	2.669563E-07
125-Sb	6.485595E-05	3.931850E-04	1.619373E-07
Specific Mass (wt%)			
Ag+	0.0000851	0.0004528	0.0000000
Al+3	0.1407107	0.7486167	0.0001564
B+3	0.0002618	0.0013935	0.0000002
Ba+2	0.0001225	0.0006518	0.0000001
Bi+3	0.0001670	0.0008883	0.0000002
Ca+2	0.0023604	0.0125596	0.0000022
Cd+2	0.0006340	0.0033758	0.0000000
Cl-	0.0256441	0.1362996	0.0000587
CO3-2	0.3966942	2.1103727	0.0004730
Cr(TOTAL)	0.0140436	0.0747823	0.0000005
Cs+	0.0001128	0.0006007	0.0000000

F-	0.0209444	0.1115277	0.0000010
Fe+3	0.0111118	0.0591522	0.0000045
Hg+2	0.0001399	0.0007446	0.0000001
K+	0.0677068	0.3604479	0.0000230
La+3	0.0004065	0.0021647	0.0000000
Li+	0.0002899	0.0015438	0.0000000
Mg+2	0.0002586	0.0013766	0.0000001
Mn+4	0.0012678	0.0067511	0.0000001
Mo+6	0.0002105	0.0011200	0.0000002
Na+	1.8061286	9.6176128	0.0000717
NH3	0.0163755	0.0051900	0.0185725
Ni+2	0.0023278	0.0023372	0.0022779
NO2-	0.4747226	2.5269331	0.0002360
NO3-	3.5169979	18.6961248	0.0073514
OH(BOUND)	0.1876967	0.9986652	0.0001926
OH-	0.0301822	0.1605662	0.0000360
Pb+2	0.0007719	0.0040181	0.0000209
Phosphor containing components	0.0646907	0.3441493	0.0000768
Se+6	0.0010836	0.0057700	0.0000001
Si+4	0.0121852	0.0648277	0.0000137
SO4-2	0.0669264	0.3561423	0.0000570
Sr+2	0.0000854	0.0004544	0.0000001
Ti+4	0.0000312	0.0001660	0.0000000
TOC	0.0494322	0.2459911	0.0039049
U(TOTAL)	0.0002514	0.0013377	0.0000003
Zn+2	0.0001314	0.0006996	0.0000000
Zr+4	0.0115379	0.0613963	0.0000102
H2O	92.3882691	63.2687429	99.9664571
H+	0.0000000	0.0000000	0.0000000
CO2	0.0000000	0.0000000	0.0000000
Total Dissolved Solids (Na Excluded) (wt%)	5.0601243	26.7981844	0.0334712
Total Suspended Solids (wt%)	0.7454780	0.3154599	0.0000000

APPENDIX B

TREATED LAW EVAPORATOR STREAM DATA

Stream Description	Feed Treated LAW	Feed Neutralized Effluent	Concentrated LAW	Condensate from LAW Evap
Specific Gravity	1.201279E+00	9.960371E-01	1.354830E+00	1.000211E+00
pH	1.400000E+01	1.199980E+01	1.400000E+01	1.108047E+01
Total Volume (gpm)	1.398842E+01	9.800359E+00	8.316158E+00	1.574299E+01
Total Mass (lb/hr)	8.395616E+03	4.877051E+03	5.629209E+03	7.867172E+03
Na Molarity	4.654928E+00	9.564147E-02	8.001080E+00	1.384081E-04
Activity (Ci/gallon)				
129-I	4.749081E-07	0.000000E+00	7.940393E-07	2.531875E-09
134-Cs	1.575297E-08	4.663790E-10	2.703969E-08	4.038980E-12
137-Cs	3.359384E-04	9.978015E-06	5.768332E-04	3.256697E-12
14-C	3.582432E-05	0.000000E+00	6.019971E-05	3.147259E-08
126-Sn	1.430030E-06	0.000000E+00	2.403044E-06	1.256318E-09
233-U	8.109593E-07	0.000000E+00	1.362748E-06	7.124486E-10
235-U	7.044819E-09	0.000000E+00	1.183822E-08	6.189054E-12
152-Eu	1.012468E-05	0.000000E+00	1.701366E-05	8.894794E-09
154-Eu	1.453164E-04	0.000000E+00	2.441918E-04	1.276642E-07
155-Eu	3.750157E-05	0.000000E+00	6.301818E-05	3.294609E-08
237-Np	6.467932E-07	0.000000E+00	1.086881E-06	5.682244E-10
238-Pu	1.128371E-06	0.000000E+00	1.898007E-06	2.681847E-13
239-Pu	2.250086E-05	0.000000E+00	3.784818E-05	5.347876E-12
240-Pu	6.141525E-06	0.000000E+00	1.033052E-05	1.459683E-12
241-Am	1.046161E-04	0.000000E+00	1.759723E-04	6.571346E-11
243-Am	4.604254E-05	0.000000E+00	7.744709E-05	1.094313E-11
242-Cm	3.178432E-07	0.000000E+00	5.341082E-07	2.792334E-10
241-Pu	4.604254E-05	0.000000E+00	7.744709E-05	1.094313E-11
243-Cm	4.969903E-08	0.000000E+00	8.351496E-08	4.366187E-11
244-Cm	9.701220E-07	0.000000E+00	1.630207E-06	8.522771E-10
3-H	4.475971E-05	0.000000E+00	3.012124E-05	2.385981E-05
60-Co	5.350007E-06	0.000000E+00	8.990228E-06	4.700118E-09
90-Sr	1.768254E-02	0.000000E+00	2.974328E-02	6.760816E-08
99-Tc	1.119640E-04	0.000000E+00	1.881459E-04	9.836324E-08
125-Sb	2.554858E-04	0.000000E+00	4.293221E-04	2.244509E-07
Specific Mass (wt%)				
Ag+	0.0001789	0.0000000	0.0002666	0.0000002
Al+3	0.8781368	0.0000000	1.3083917	0.0009266
B+3	0.0011040	0.0000000	0.0016449	0.0000012
Ba+2	0.0003972	0.0000000	0.0005919	0.0000004
Bi+3	0.0009166	0.0000000	0.0013656	0.0000010
Ca+2	0.0036401	0.0000000	0.0054235	0.0000039
Cd+2	0.0001758	0.0000000	0.0002620	0.0000002
Cl-	0.1927241	0.3081970	0.5533995	0.0007536
CO3-2	1.8709695	0.0000000	2.7876764	0.0019741
Cr(TOTAL)	0.0436851	0.0000000	0.0651518	0.0000013

Cs+	0.0000002	0.0000000	0.0000003	0.0000000
F-	0.1369480	0.0311205	0.2312023	0.0000068
Fe+3	0.0051922	0.0000000	0.0077362	0.0000055
Hg+2	0.0002119	0.0017125	0.0002775	0.0000002
K+	0.4371071	0.0000000	0.6517338	0.0001319
La+3	0.0000717	0.0000000	0.0001068	0.0000001
Li+	0.0001031	0.0000000	0.0001537	0.0000001
Mg+2	0.0007039	0.0000000	0.0010487	0.0000007
Mn+4	0.0003630	0.0000000	0.0005408	0.0000004
Mo+6	0.0014914	0.0000000	0.0022221	0.0000016
Na+	8.9124915	0.2205096	13.4830308	0.0003183
NH3	0.0556091	0.0000000	0.0046946	0.0559853
Ni+2	0.0010718	0.0000000	0.0000905	0.0010791
NO2-	3.6214624	0.0000000	5.3989608	0.0015931
NO3-	8.2610982	0.1691503	12.4458561	0.0154626
OH(BOUND)	1.2709676	0.0000000	1.8936954	0.0013410
OH-	1.9297357	0.0170413	2.8899856	0.0020466
Pb+2	0.0022422	0.0000000	0.0032374	0.0000764
Phosphor containing components	0.2305136	0.0000000	0.3434569	0.0002432
Se+6	0.0007265	0.0000000	0.0010825	0.0000008
Si+4	0.0190601	0.0000000	0.0283989	0.0000201
SO4-2	0.4242482	0.0000000	0.6322928	0.0003199
Sr+2	0.0002059	0.0000000	0.0003067	0.0000002
Ti+4	0.0000875	0.0000000	0.0001303	0.0000001
TOC	0.1782369	0.0000016	0.2481087	0.0126807
U(TOTAL)	0.0014123	0.0000000	0.0021042	0.0000015
Zn+2	0.0001606	0.0000000	0.0002393	0.0000002
Zr+4	0.0092074	0.0000000	0.0137187	0.0000097
H2O	71.5070307	98.7871894	55.3633120	99.9050111
H+	0.0000000	0.0000000	0.0000000	0.0000000
CO2	0.0000000	0.0000000	0.0000000	0.0000000
Total Dissolved Solids (Na Excluded) (wt%)	19.5804777	0.5272233	29.5260185	0.0946707
Total Suspended Solids (wt%)	0.0000000	0.4650777	1.6276387	0.0000000

APPENDIX C

Predicted Maximum Radionuclide

Stream Number	Waste Feed Evaporators			Treated LAW Evaporator		
Stream Description	**FEP Feed**	**FEP Concentrate**	**FEP Overhead**	**TLP Feed**	**TLP Concentrate**	**TLP overhead**
Specific Gravity	1.108297E+00	1.291591E+00	1.000111E+00	1.105304E+00	1.278000E+00	1.000163E+00
pH	1.312459E+01	1.389913E+01	1.017151E+01	1.321351E+01	1.386570E+01	1.029492E+01
Total Volume (gpm)	1.921589E+01	3.462492E+00	2.248903E+00	1.074593E+01	2.391253E+00	1.179073E+00
Total Mass (lb/hr)	1.066579E+04	2.239702E+03	8.426084E+03	5.948428E+03	1.530498E+03	4.417929E+03
Na Molarity	1.678973E+00	1.000000E+01	6.235205E-05	2.217504E+00	9.964802E+00	8.915611E-05
Activity (Ci/gallon)						
129-I	1.118972E-06	5.133318E-06	1.657679E-06	6.388461E-07	2.124451E-06	1.513816E-06
134-Cs	1.129467E-04	6.250516E-04	2.728177E-06	2.084563E-08	9.341234E-08	5.370692E-10
137-Cs	4.359059E+00	2.419159E+01	2.232506E-06	4.525083E-04	2.033504E-03	4.407797E-10
14-C	1.530790E-05	8.491637E-05	5.895986E-08	8.056168E-06	3.616737E-05	7.268873E-08
126-Sn	1.923017E-04	1.067222E-03	1.486077E-10	2.043400E-08	9.173655E-08	1.841322E-10
233-U	1.150416E-06	6.384484E-06	1.248818E-11	1.717230E-09	7.709344E-09	1.547408E-11
235-U	6.946466E-07	3.853045E-06	3.162332E-09	4.348219E-07	1.952093E-06	3.918211E-09
152-Eu	6.188336E-04	3.434357E-03	6.581440E-10	9.049626E-08	4.062746E-07	8.154683E-10
154-Eu	6.562753E-02	3.642143E-01	8.345943E-07	1.147543E-04	5.151790E-04	1.034060E-06
155-Eu	3.737761E-02	2.074354E-01	2.034016E-07	2.796783E-05	1.255590E-04	2.520201E-07
237-Np	9.537993E-05	5.293324E-04	2.536272E-10	3.487470E-08	1.565667E-07	3.142584E-10
238-Pu	4.520421E-04	2.508710E-03	2.573295E-11	1.309172E-06	5.883206E-06	3.191544E-11
239-Pu	3.985830E-03	2.212027E-02	5.228669E-11	2.660106E-06	1.195409E-05	6.484898E-11
240-Pu	2.153818E-04	1.195310E-03	4.564062E-11	2.321981E-06	1.043461E-05	5.660605E-11
241-Am	4.833846E-02	2.682652E-01	3.172753E-09	6.111128E-05	2.746230E-04	3.937305E-09
241-Pu	2.838034E-02	1.575032E-01	8.472452E-10	4.310391E-05	1.937020E-04	1.050802E-09
242-Cm	4.706917E-15	2.611634E-14	8.863463E-18	1.212658E-15	5.444115E-15	1.092735E-17
243-Am	1.646951E-06	9.139638E-06	7.551321E-10	1.033137E-07	4.638171E-07	9.309668E-10
243-Cm	1.726031E-04	9.578996E-04	7.809701E-10	1.073837E-07	4.820890E-07	9.676419E-10
244-Cm	3.700041E-03	2.053421E-02	1.637305E-08	2.251301E-06	1.010701E-05	2.028663E-08
3-H	2.663313E-04	8.683912E-04	9.386773E-04	1.255884E-04	2.257503E-04	6.867589E-04
60-Co	1.287961E-02	7.147826E-02	6.882351E-08	9.462625E-06	4.248158E-05	8.526838E-08
90-Sr	1.320134E+01	7.326381E+01	2.292527E-06	7.286412E-03	3.274264E-02	2.857525E-06
99-Tc	3.006068E-02	1.668241E-01	6.876193E-06	2.174950E-04	9.764235E-04	1.959863E-06
125-Sb	4.141097E-02	2.298192E-01	6.367954E-09	8.755757E-07	3.930816E-06	7.889875E-09

APPENDIX D

EVAPORATOR PROCESS DATA

PROCESS DATA SHEET: Mechanical Pump

PLANT ITEM No.
24590-PTF-FEP-PMP-00007A

Project:	RPP-WTP		System:		FEP			
Project No:	24590		Description:		Waste Feed Evaporator Feed Pump			
Site:	Hanford		Supporting Calcs No.		24590-PTF-MEC-FEP-00001, Rev. A			
Building No.:	10		Associated Drawings:		24590-PTF-M5-V17T-P0004001			
PROCESS DATA	Units	Mode 1 (Note 1)	Mode 2 (Note2)	Mode 3 (Note 3)	Mode 4	ETC.		
Capacity Normal (Note 4)	gpm	50	39	36				
Capacity Rated	gpm	60	N/A	N/A				
Minimum Pumping Temperature	°F	59	59	59				
Normal Pumping Temperature	°F	77	77	77				
Maximum Pumping Temperature	°F	122	122	122				
Density at Normal Pumping Temperature (Note 7)	lb/ft^3	75.9	67.6	68.9				
Sp Gravity at Normal Pumping Temperature (Note 7)		1.23	1.08	1.10				
Viscosity at Normal Pumping Temperature	cP	11.8	11.8	11.8				
Vapor Press at Normal Pumping Temp	psia	0.43	0.44	0.44				
Origin Pressure	psia	14.61	14.61	14.61				
Delivery Pressure	psia	(Note 5)	(Note 5)	(Note 5)				
FLUID COMPOSITION								
Content Code (e.g. Type/Name of Liquid)								
Solids Content	% wt/wt	4	7	2				
Solids Size Range	microns	(Note 6)	(Note 6)	(Note 6)				
Solids Characteristics		(Note 6)	(Note 6)	(Note 6)				

Notes:
1. Mode 1 represents Envelope A waste feed and recycles required to meet production rate of 60 Mt/d LAW glass.
2. Mode 1 represents Envelope B waste feed and recycles required to meet production rate of 60 Mt/d LAW glass.
3. Mode 1 represents Envelope C waste feed and recycles required to meet production rate of 30 Mt/d LAW glass.
4. Minimum flowrate is 20 gpm for Envelope A, 25 gpm for Envelope B, and 23 gpm for Envelope C.
5. Delivery pressure to be determined by waste feed evaporator vendor.
6. Solids size range and characteristics to be determined by R&T.
7. Density and Specific Gravity based on pretreated AW-101 of same molarity. Does not include weight percent solids.

PROCESS DATA SHEET: Mechanical Pump

PLANT ITEM No.
24590-PTF-FEP-PMP-00007B

Project:	RPP-WTP		System:		FEP			
Project No:	24590		Description:		Waste Feed Evaporator Feed Pump			
Site:	Hanford		Supporting Calcs No.		24590-PTF-MEC-FEP-00001, Rev. A			
Building No.:	10		Associated Drawings:		24590-PTF-M5-V17T-P0004001			
PROCESS DATA	Units	Mode 1 (Note 1)	Mode 2 (Note2)	Mode 3 (Note 3)	Mode 4	ETC.		
Capacity Normal (Note 4)	gpm	50	39	36				
Capacity Rated	gpm	60	N/A	N/A				
Minimum Pumping Temperature	°F	59	59	59				
Normal Pumping Temperature	°F	77	77	77				
Maximum Pumping Temperature	°F	122	122	122				
Density at Normal Pumping Temperature (Note 7)	lb/ft^3	75.9	67.6	68.9				
Sp Gravity at Normal Pumping Temperature (Note 7)		1.23	1.08	1.10				
Viscosity at Normal Pumping Temperature	cP	11.8	11.8	11.8				
Vapor Press at Normal Pumping Temp	psia	0.43	0.44	0.44				
Origin Pressure	psia	14.61	14.61	14.61				
Delivery Pressure	psia	(Note 5)	(Note 5)	(Note 5)				
FLUID COMPOSITION								
Content Code (e.g. Type/Name of Liquid)								
Solids Content	% wt/wt	4	7	2				
Solids Size Range	microns	(Note 6)	(Note 6)	(Note 6)				
Solids Characteristics		(Note 6)	(Note 6)	(Note 6)				

Notes:
1. Mode 1 represents Envelope A waste feed and recycles required to meet production rate of 60 Mt/d LAW glass.
2. Mode 1 represents Envelope B waste feed and recycles required to meet production rate of 60 Mt/d LAW glass.
3. Mode 1 represents Envelope C waste feed and recycles required to meet production rate of 30 Mt/d LAW glass.
4. Minimum flowrate is 20 gpm for Envelope A, 25 gpm for Envelope B, and 23 gpm for Envelope C.
5. Delivery pressure to be determined by waste feed evaporator vendor.
6. Solids size range and characteristics to be determined by R&T.
7. Density and Specific Gravity pretreated AW-101 of same molarity. Does not include weight percent solids.

PROCESS DATA SHEET: Mechanical Pump

PLANT ITEM No.
24590-PTF-FEP-PMP-00008A

Project:	RPP-WTP		System:		FEP			
Project No:	24590		Description:		Waste Feed Evaporator Concentrate Pump			
Site:	DOE Hanford		Supporting Calcs No.		24590-PTF-MEC-FEP-00001, Rev. A			
Building No.:	10		Associated Drawings:		24590-PTF-M5-V17T-P0004002			
PROCESS DATA	Units	Mode 1 (Note 1)	Mode 2 (Note2)	Mode 3(Note 3)	Mode 4	ETC.		
Capacity Normal (Note 4)	gpm	28	14	14				
Capacity Rated	gpm	34	N/A	N/A				
Minimum Pumping Temperature	°F	59	59	59				
Normal Pumping Temperature	°F	122	122	122				
Maximum Pumping Temperature	°F	122	122	122				
Density at Normal Pumping Temperature (Note 7)	lb/ft^3	75.9	75.9	76.6				
Sp Gravity at Normal Pumping Temperature (Note 7)		1.23	1.23	1.25				
Viscosity at Normal Pumping Temperature	cP	5.5	5.5	5.5				
Vapor Press at Normal Pumping Temp	psia	1.3	1.3	1.2				
Origin Pressure	psia	Note 5	Note 5	Note 5				
Delivery Pressure	psia	14.6	14.6	14.6				
FLUID COMPOSITION								
Content Code (e.g. Type/Name of Liquid)								
Solids Content	% wt/wt	5	15	3				
Solids Size Range	microns	Note 6	Note 6	Note 6				
Solids Characteristics		Note 6	Note 6	Note 6				

Notes:
1. Mode 1 represents Envelope A concentrate required to meet production rate of 60 Mt/d LAW glass.
2. Mode 2 represents Envelope B concentrate required to meet production rate of 60 Mt/d LAW glass.
3. Mode 3 represents Envelope C concentrate required to meet production rate of 30 Mt/d LAW glass.
4. Minimum flowrate is 12 gpm for Envelope A, 4 gpm for Envelope B, and 3 gpm for Envelope C.
5. Origin pressure to be determined by treated LAW evaporator vendor.
6. Solids size range and characteristics to be determined by R&T.
7. Density and Specific Gravity based on pretreated AW-101 solutions of same molarity. Does not include weight percent solids.

PROCESS DATA SHEET: Mechanical Pump

PLANT ITEM No.
24590-PTF-FEP-PMP-00008B

Project:	RPP-WTP		System:		FEP			
Project No:	24590		Description:		Waste Feed Evaporator Concentrate Pump			
Site:	Hanford		Supporting Calcs No.		24590-PTF-MEC-FEP-00001, Rev. A			
Building No.:	10		Associated Drawings:		24590-PTF-M5-V17T-P0004002			
PROCESS DATA	Units	Mode 1 (Note 1)	Mode 2 (Note2)	Mode 3(Note 3)	Mode 4	ETC.		
Capacity Normal (Note 4)	gpm	28	14	14				
Capacity Rated	gpm	34	N/A	N/A				
Minimum Pumping Temperature	°F	59	59	59				
Normal Pumping Temperature	°F	122	122	122				
Maximum Pumping Temperature	°F	122	122	122				
Density at Normal Pumping Temperature (Note 7)	lb/ft^3	75.9	75.9	76.6				
Sp Gravity at Normal Pumping Temperature (Note 7)		1.23	1.23	1.25				
Viscosity at Normal Pumping Temperature	cP	5.5	5.5	5.5				
Vapor Press at Normal Pumping Temp	psia	1.3	1.3	1.2				
Origin Pressure	psia	Note 5	Note 5	Note 5				
Delivery Pressure	psia	14.6	14.6	14.6				
FLUID COMPOSITION								
Content Code (e.g. Type/Name of Liquid)								
Solids Content	% wt/wt	5	15	3				
Solids Size Range	microns	Note 6	Note 6	Note 6				
Solids Characteristics		Note 6	Note 6	Note 6				

Notes:
1. Mode 1 represents Envelope A concentrate required to meet production rate of 60 Mt/d LAW glass.
2. Mode 2 represents Envelope B concentrate required to meet production rate of 60 Mt/d LAW glass.
3. Mode 3 represents Envelope C concentrate required to meet production rate of 30 Mt/d LAW glass.
4. Minimum flowrate is 12 gpm for Envelope A, 4 gpm for Envelope B, and 3 gpm for Envelope C.
5. Origin pressure to be determined by treated LAW evaporator vendor.
6. Solids size range and characteristics to be determined by R&T.
7. Density and Specific Gravity based on pretreated AW-101 solutions of same molarity. Does not include weight percent solids.

PROCESS DATA SHEET: Evaporator

PLANT ITEM No.
24590-PTF-FEP-EVAP-00001B

Project:	RPP-WTP	System:	FEP
Project No:	24590	Description:	Waste Feed Evaporator
Site:	Hanford	Supporting Calcs No.	24590-PTF-MEC-FEP-00001, Rev. B
Building No.:	10	Associated Drawings:	24590-PTF-M5-V17T-P0004002, Rev. 0

UTILITIES DATA	Units	Cooling Water Note 1	Instrument Air
Temperature	°F	83	60
Pressure	psig	65	100

PROCESS DATA	Units	Envelope A Feed Minimum Na	Envelope A Feed Maximum Na	Envelope A Concentrate	Envelope A Overheads	Envelope A Condensate	Evaporator Bypass (Envelop A) Feed (Recycles) Minimum Na (Note 14)	Evaporator Bypass (Envelop A) Feed (Recycles) Maximum Na (Note 14)	Evaporator Bypass (Envelop A) Concentrate (Note 14)
					Note 5,9				
Liquid Flow (Note 4)	lb_m/hr	11,000	27,000	7,000 (Note 7)	N/A	14,900 (Note 8)	14,200	16,300 (note 13)	14,200
Vapor Flow	lb_m/hr	N/A	N/A	N/A	14,900	N/A	N/A	N/A	N/A
Non-Condensables Flow	lb_m/hr	N/A	N/A	N/A	42.7	N/A	N/A	N/A	N/A
Temperature (Note 6)	°F	77	77	122	111	111	77	77	122
Na Molarity		1.4	4	5	N/A	0	0.2	1	5
Density	lb_m/ft^3	67.8	75.9	74.0	0.0039	61.9	63.4	66.6	75.9
Specific Gravity		1.09	1.22	1.23	N/A	1	1.02	1.07	1.23
Viscosity	Cp	11.8	11.8	5.5	0.01	0.7	11.8	11.8	5.5
Specific Heat	BTU/lb_m°F	0.93	0.88	0.68	0.45	1	0.99	0.94	0.68
Thermal Conductivity	BTU/hr ft °F	0.36	0.39	0.39	0.01	0.37	0.353	0.369	0.39

	Units	Envelope B Feed Minimum Na	Envelope B Feed Maximum Na	Envelope B Concentrate	Envelope C Feed Minimum Na	Envelope C Feed Maximum Na	Envelope C Concentrate
Liquid Flow (Note 4)	lb_m/hr	13,000	21,100	8,490(Note10)	11,900	19,800	8780 (Note 11)
Vapor Flow	lb_m/hr	N/A	N/A	N/A	N/A	N/A	N/A
Non-Condensables Flow	lb_m/hr	N/A	N/A	N/A	N/A	N/A	N/A
Temperature (Note 6)	°F	77	77	122	77	77	122
Na Molarity		0.78	1.81	5	0.77	2.30	6
Density (Note 12)	lbm /ft3	64.9	67.6	74.0	64.9	68.9	76.6
Specific Gravity (Note 12)		1.04	1.08	1.21	1.04	1.10	1.25
Viscosity	Cp	11.8	11.8	5.5	11.8	11.8	5.5
Specific Heat	BTU/lbm°F	0.94	0.91	0.68	0.94	0.91	0.68
Thermal Conductivity	BTU/hr ft °F	0.377	0.385	0.39	0.377	0.385	0.39

Notes:
1. Maximum temperature and pressure of cooling water supply.
2. Temperature and pressure of steam supply.
3. Delete
4. Evaporator to require 50% turndown capability.
5. Evaporator overheads prior to condensate removal.
6. Vacuum system to enable concentration of feed at reduced temperature .
7 Maximum transfer rate. Minimum Transfer rate is 7,300 lbs/hr.
8. Maximum evaporator overhead condensate production capacity. Envelope A average conditions require 11,800 lbs/hr.
9. Maximum overhead vapor and non-condensable flow. Average vapor flow is 11,800 lbs/hr. Non-condensable flow also applies to average conditions.
10.Maximum transfer rate. Minimum transfer rate is 2430 lbs/hr.
11.Maximum transfer rate. Minimum transfer rate is 1880 lbs/hr.
12.Density and Specific Gravity based on sodium hydroxide solutions of same molarity. Does not include weight percent solids.
13.Maximum transfer rate. Minimum transfer rate is 7,300 lbs/hr.
14.Based on evaporator semibatch operation
15.See section 3.4.3.3 for high pressure steam supply condition

PROCESS DATA SHEET: Evaporator

PLANT ITEM No.
24590-PTF-FEP-EVAP-00001B

Project:	RPP-WTP	System:	FEP
Project No:	24590	Description:	Waste Feed Evaporator
Site:	Hanford	Supporting Calcs No.	24590-PTF-MEC-FEP-00001, Rev. B
Building No.:	10	Associated Drawings:	24590-PTF-M5-V17T-P0004002, Rev. 0

UTILITIES DATA	Units	Cooling Water	Instrument Air	High Pressure Steam
		Note 1		
Temperature	°F	83	60	Note 15
Pressure	psig	65	100	Note 15

PROCESS DATA	Units	Envelope A					Evaporator Bypass (Envelop A)		
		Feed		Concentrate	Overheads	Condensate	Feed (Recycles)		
		Minimum Na	Maximum Na				Minimum Na (Note 14)	Maximum Na (Note 14)	Concentrate (Note 14)
					Note 5,9				
Liquid Flow (Note 4)	lb_m/hr	11,000	27,000	7,000 (Note 7)	N/A	14,900 (Note 8)	14,200	16,300 (note 13)	14,200
Vapor Flow	lb_m/hr	N/A	N/A	N/A	14,900	N/A	N/A	N/A	N/A
Non-Condensables Flow	lb_m/hr	N/A	N/A	N/A	42.7	N/A	N/A	N/A	N/A
Temperature (Note 6)	°F	77	77	122	111	111	77	77	122
Na Molarity		1.4	4	5	N/A	0	0.2	1	5
Density	lb_m/ft^3	67.8	75.9	74.0	0.0039	61.9	63.4	66.6	75.9
Specific Gravity		1.09	1.22	1.23	N/A	1	1.02	1.07	1.23
Viscosity	Cp	11.8	11.8	5.5	0.01	0.7	11.8	11.8	5.5
Specific Heat	BTU/lb_m°F	0.93	0.88	0.68	0.45	1	0.99	0.94	0.68
Thermal Conductivity	BTU/hr ft °F	0.36	0.39	0.39	0.01	0.37	0.353	0.369	0.39

	Units	Envelope B			Envelope C		
		Feed		Concentrate	Feed		Concentrate
		Minimum Na	Maximum Na		Minimum Na	Maximum Na	
Liquid Flow (Note 4)	lb_m/hr	13,000	21,100	8,490(Note10)	11,900	19,800	8780 (Note 11)
Vapor Flow	lb_m/hr	N/A	N/A	N/A	N/A	N/A	N/A
Non-Condensables Flow	lb_m/hr	N/A	N/A	N/A	N/A	N/A	N/A
Temperature (Note 6)	°F	77	77	122	77	77	122
Na Molarity		0.78	1.81	5	0.77	2.30	6
Density (Note 12)	lbm /ft3	64.9	67.6	74.0	64.9	68.9	76.6
Specific Gravity (Note 12)		1.04	1.08	1.21	1.04	1.10	1.25
Viscosity	Cp	11.8	11.8	5.5	11.8	11.8	5.5
Specific Heat	BTU/lbm°F	0.94	0.91	0.68	0.94	0.91	0.68
Thermal Conductivity	BTU/hr ft °F	0.377	0.385	0.39	0.377	0.385	0.39

Notes:
1. Maximum temperature and pressure of cooling water supply.
2. Temperature and pressure of steam supply.
3. Delete
4. Evaporator to require 50% turndown capability.
5. Evaporator overheads prior to condensate removal.
6. Vacuum system to enable concentration of feed at reduced temperature .
7 Maximum transfer rate. Minimum Transfer rate is 7,300 lbs/hr.
8. Maximum evaporator overhead condensate production capacity. Envelope A average conditions require 11,800 lbs/hr.
9. Maximum overhead vapor and non-condensable flow. Average vapor flow is 11,800 lbs/hr. Non-condensable flow also applies to average conditions.
10.Maximum transfer rate. Minimum transfer rate is 2430 lbs/hr.
11.Maximum transfer rate. Minimum transfer rate is 1880 lbs/hr.
12.Density and Specific Gravity based on sodium hydroxide solutions of same molarity. Does not include weight percent solids.
13.Maximum transfer rate. Minimum transfer rate is 7,300 lbs/hr.
14.Based on evaporator semibatch operation
15.See section 3.4.3.3 for high pressure steam supply condition

PROCESS DATA SHEET: VESSEL & PUMPS				**Plant Item No.** 24590-PTF-MV-TLP-VSL-00009A 24590-PTF-MV-TLP-VSL-00009B 24590-PTF-MV-TLP-PMP-00005A 24590-PTF-MV-TLP-PMP-00005B
Project: RPP-WTP				
Project No: 24590	Description: Treated LAW SBS Condensate Receipt Vessels and Pumps			
Site: Hanford				
Building No.: 10	Associated Drawing: 24590-PTF-M5-V17T-00005			
SUMMARY DATA	Units	Minimum	Nominal	Maximum
Batch Volume	Gal	N/A	80,000	N/A
Transfer Rate	gpm	10	13	38
Receipt Rate	gpm	N/A	175	N/A
Fluid Temperature	°F	68	113	167
Specific Gravity	N/A	1.02	1.02	1.02
Viscosity	cP	1	1	1
Internal Pressure	psig	-0.22	-0.14	0
Solids Content	wt %	0.30	0.34	0.41

PROCESS DATA SHEET: SYSTEM TLP				
Project: RPP-WTP				
Project No: 24590		Description: Treated LAW Evaporation - System TLP		
Site: Hanford				
Building No.: 10		Associated Drawing: 24590-PTF-M5-V17T-00005		
SUMMARY DATA	Units	Minimum	Nominal	Maximum
Treated LAW (TXP14)				
Transfer Rate	gpm	11.4	14.3	17.9
Fluid Temperature	°F	59	77	113
Specific Gravity	N/A	1.15	1.20	1.22
Viscosity	cP	2.0	3.3	4.0
LAW SBS Condensate (RLD21)				
Batch Volume	Gal	N/A	80,000	N/A
Transfer Rate	gpm	10	13	38
Receipt Rate	gpm	N/A	175	N/A
Fluid Temperature	°F	68	113	167
Specific Gravity	N/A	1.02	1.02	1.02
Viscosity	cP	1	1	1
Thermal Conductivity	BTU/(hr*ft-°F)	N/A	0.372	N/A
Treated LAW Concentrate (TLP02)				
Transfer Rate	gpm	5.6	9.2	13.7
Fluid Temperature	°F	77	122	150
Specific Gravity	N/A	1.33	1.40	1.57
Viscosity	cP	12.8	12.8	30.0
Vapor Pressure	torr	55	67	77
Thermal Conductivity	BTU/(hr*ft-°F)	N/A	0.397	0.399

APPENDIX E

Quality Level and Seismic Category for Evaporator Equipment

SSC	Description	Q	DL***	SC
FEP Separator Vessels	FEP-SEP-00001A/B	**Q**	**L-1**	SC-I
• Demister Pads	Pad Materials	CM	**N/A**	SC-II
• Upper Demister Pad Supports	Structural supports	CM	**N/A**	SC-II
• Lower Demister Pad Supports	Structural supports	**Q**	**L-2**	SC-II
• Internal Piping/Misc.	Bubble trays, spray rings, dip legs, etc.	**Q**	**L-2**	SC-II
TLP Separator Vessel	TLP-SEP-00001	**Q**	**L-1**	SC-I*
• Demister Pads	Pad Materials	CM	**N/A**	SC-II
• Upper Demister Pad Supports	Structural supports	CM	**N/A**	SC-II
• Lower Demister Pad Supports	Structural supports	**Q**	**L-2**	SC-II
• Internal Piping/Misc.	Bubble trays, spray rings, dip legs, etc.	**Q**	**L-2**	SC-II
Reboilers	FEP-RBLR-00001A/B	**Q**	**L-1**	SC-I
	TLP-RBLR-00001	**Q**	**L-1**	SC-I*
Recirculation Pumps, Motors, Speed Adjustable Drives, and Seal Barrier Systems	FEP-PMP-00009A/B, FEP-MTR-00009A/B	**Q**	**N/A**	SC-I
	TLP-PMP-00001, TLP-MTR-00001	**Q**	**N/A**	SC-I*
	FEP-ASD-00009A/B, TLP-ASD-00001, and Pump Seal Barrier Systems	CM	**N/A**	SC-III
Feed Pumps, Motors, and Speed Adjustable Drives	TLP-PMP-00005A/B, TLP-MTR-00005A/B, TLP-ASD-00005A/B	CM	**N/A**	SC-III
Concentrate Pumps, Motors, and Speed Adjustable Drives	TLP-PMP-00011A/B, TLP-MTR-00011A/B, TLP-ASD-00011A/B	CM	**N/A**	SC-III
Black Cell Separator Vessel Offgas Pipework	Piping from the top section of the FEP Evaporator separator vessels to the 56' Elev. floor (ceiling of black cell).	**Q**	**N/A**	SC-I*
	Piping from the top section of the TLP Evaporator separator vessel to the 56' Elev. floor (ceiling of black cell).	**Q**	**N/A**	SC-I*
Out-Cell Separator Vessel Offgas Pipework	Piping from 56' Elev. floor to the FEP Evaporator primary condenser in C3 room.	**Q**	**N/A**	SC-I*
	Piping from 56' Elev. floor to the TLP Evaporator primary condenser in C3 room.	**Q**	**N/A**	SC-I*
	FEP-COND-00001A/B FEP-COND-00002A/B FEP-COND-00003A/B FEP-EJCTR-00040, -00041, -00042,and -00043	**Q**	**L-1**	SC-I*
	TLP-COND-00001 TLP-COND-00002 TLP-COND-00003 TLP-EJCTR-000064 and -00067	**Q**	**L-1**	SC-I*
Condensate Collection Vessels	FEP-VSL-00005	CM	**N/A**	SC-III
	TLP-VSL-00002	CM	**N/A**	SC-III
Condensate Pumps, Motors, and Speed Adjustable Drives	FEP-PMP-00006A/B, FEP-MTR-00006A/B, FEP-ASD-00006A/B	CM	**N/A**	SC-III
	TLP-PMP-00002A/B, TLP-MTR-00002A/B, FEP-ASD-00002A/B	CM	**N/A**	SC-III
Antifoam Vessel	AFR-TK-00001	CM	**N/A**	SC-IV
Antifoam Pumps	AFR-PMP-00006, -00007, and –00008	CM	**N/A**	SC-IV

Steam Conditioning System Components	**Desuperheater vessels FEP-DHTR-00001, FEP-DHTR-00002, TLP-DHTR-00003**	**CM**	**N/A**	**SC-III**
	High Pressure Steam Control Valves and Flow Meters FEP-PV-0267, FEP-PV-0467, TLP-PV-0355 FEP-FT-0201, FEP-FT-0401, TLP-FT-0301	**Q**	**N/A**	**SC-I****
	Steam Condensate Control Valves and Flow Meters FEP-TV-0202, FEP-TV-0402, TLP-TV-0302 FEP-FT-0252, FEP-FT-0452, TLP-FT-0350	**CM**	**N/A**	**SC-III**
Reboiler Steam Condensate Transfer Stations	FEP-VSL-00021, FEP-PMP-00010A/B FEP-VSL-00022, FEP-PMP-00011A/B	CM	**N/A**	SC-III
	TLP-VSL-00047, TLP-PMP-00012A/B	CM	**N/A**	SC-III

*These quality level and seismic category designations are higher than those required for safety as deemed necessary for commercial reasons. They are consistent with the Buyer's Authorization Basis document because they meet and exceed the minimum safety requirements. These designations are not necessarily reflected in their associated Buyer's P&IDs.

****Safety function of these valves and flow meters is confinement. These valves and flow meters are not required to function during and after DBE.**

*****Design level (DL) is used to determine allowable nozzle reinforcement methods and nondestructive examination (NDE) requirements as specified in specification 24590-WTP-3PS-MV00-T0001.**

For CM material to the ASME or ASTM standards, any year of the standard is acceptable.

APPENDIX F

SEPARATOR VESSEL SKID SUPPORT LAYOUT

SEPARATOR VESSEL, EMBEDDED PLATES & SKID

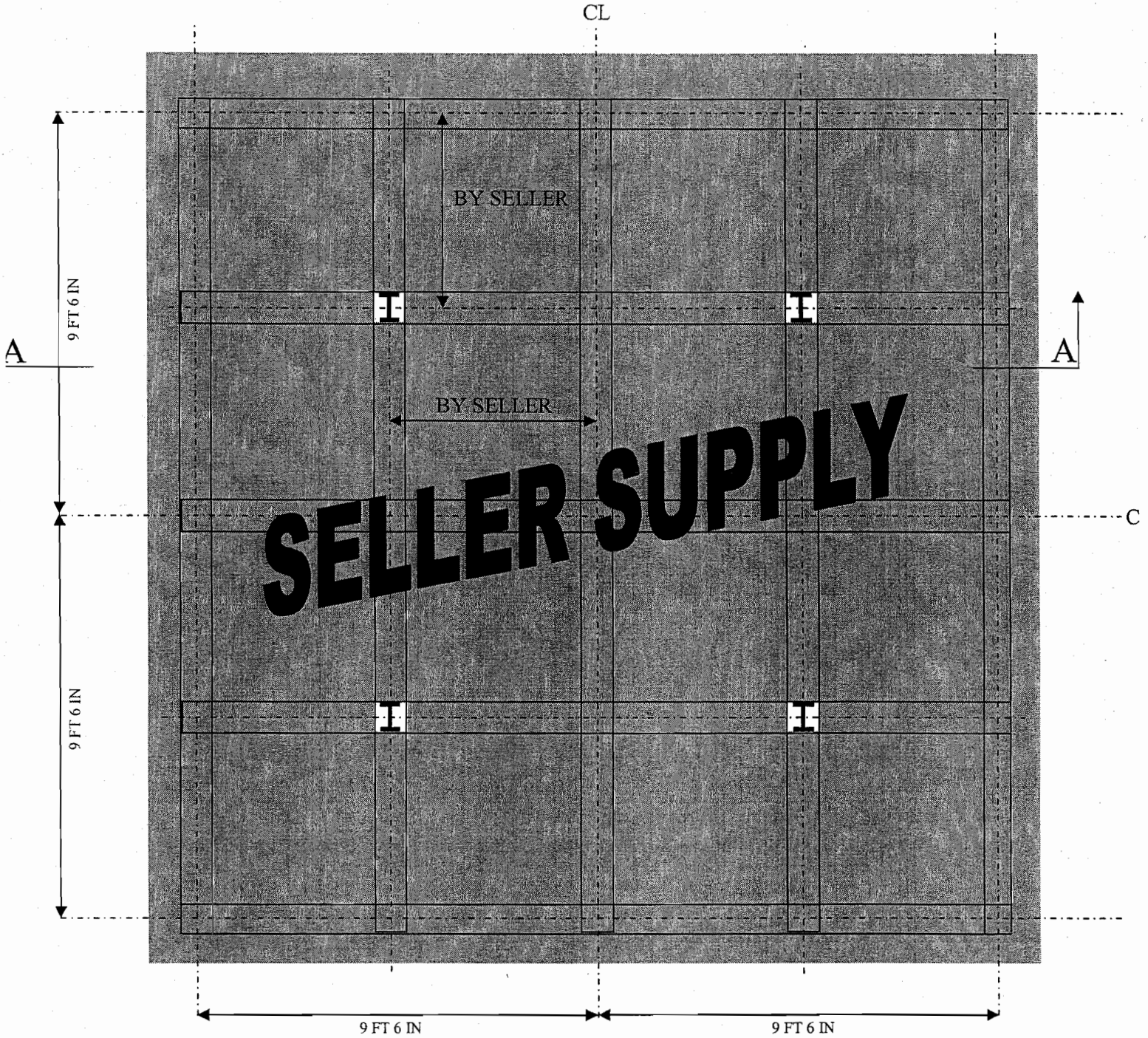

SKID PLAN VIEW

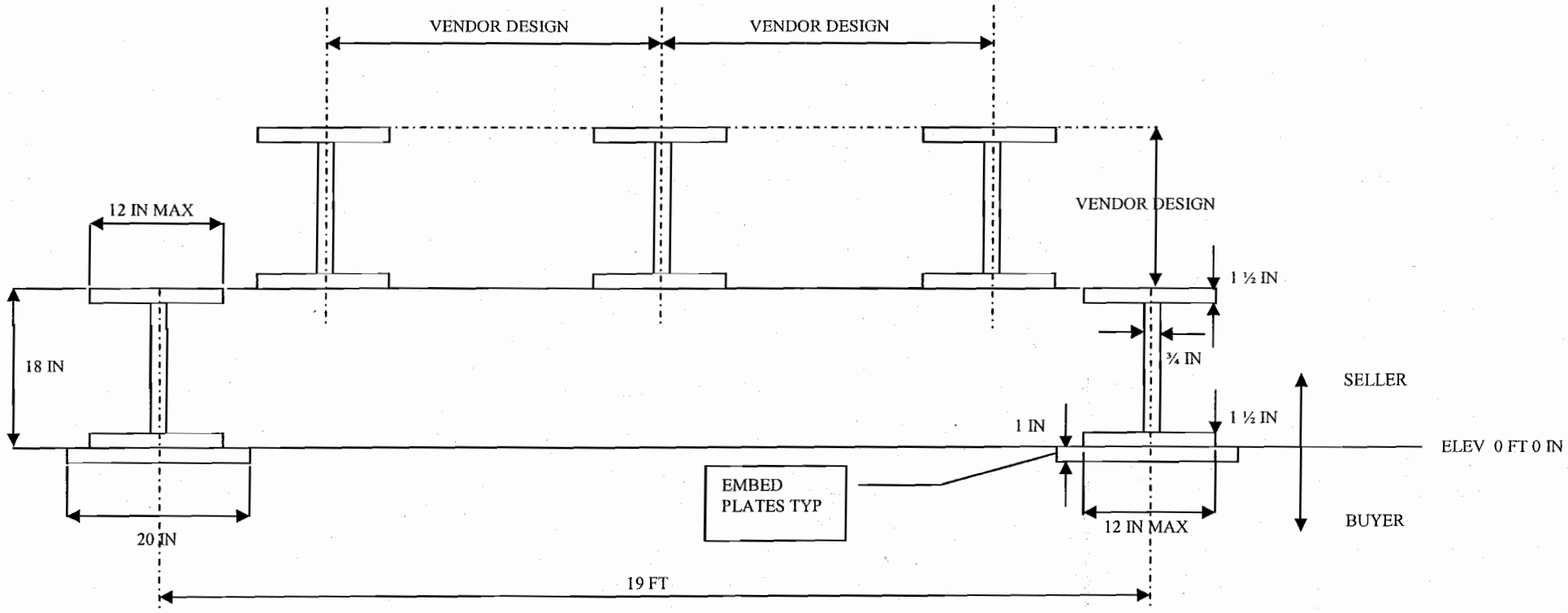
VENDOR DESIGN
VENDOR DESIGN
VENDOR DESIGN
12 IN MAX
18 IN
1 ½ IN
¾ IN
SELLER
1 IN
1 ½ IN
ELEV 0 FT 0 IN
EMBED
PLATES TYP
12 IN MAX
BUYER
20 IN
19 FT

SECTION A

APPENDIX G

HOT CELL REMOTE IMPACT WRENCH

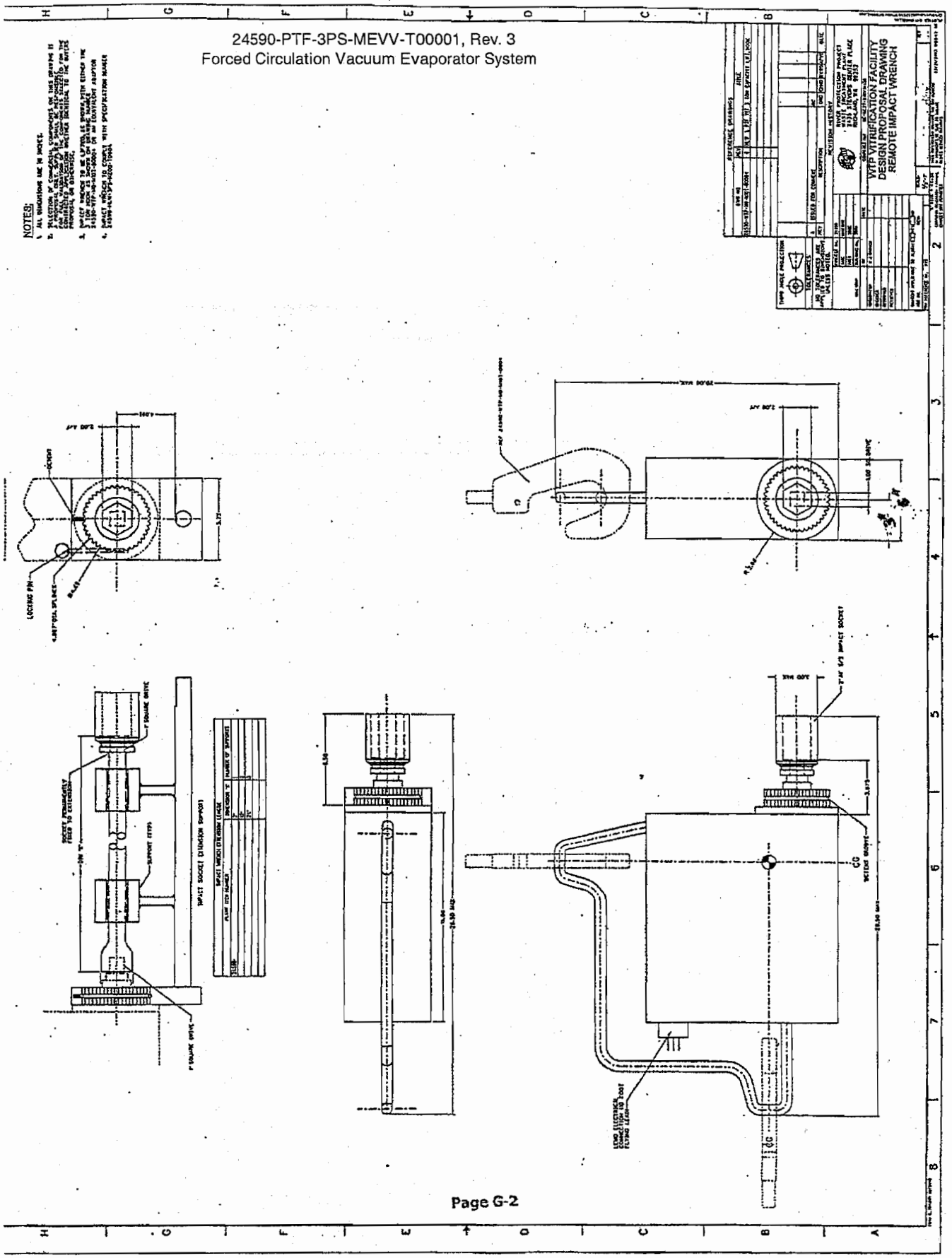
NOTES:
WTP VITRIFICATION FACILITY
DESIGN PROPOSAL DRAWING
REMOTE IMPACT WRENCH
LOCKING PIN
IMPACT SOCKET EXTENSION SUPPORT
SUPPORT STEPS
SOCKET PERMANENTLY FIXED TO EXTENSION
CG

APPENDIX H

Deleted

APPENDIX I

FEP EVAPORATOR EQUIPMENT SKIDS LOCATION AND LAYOUT SKETCHES

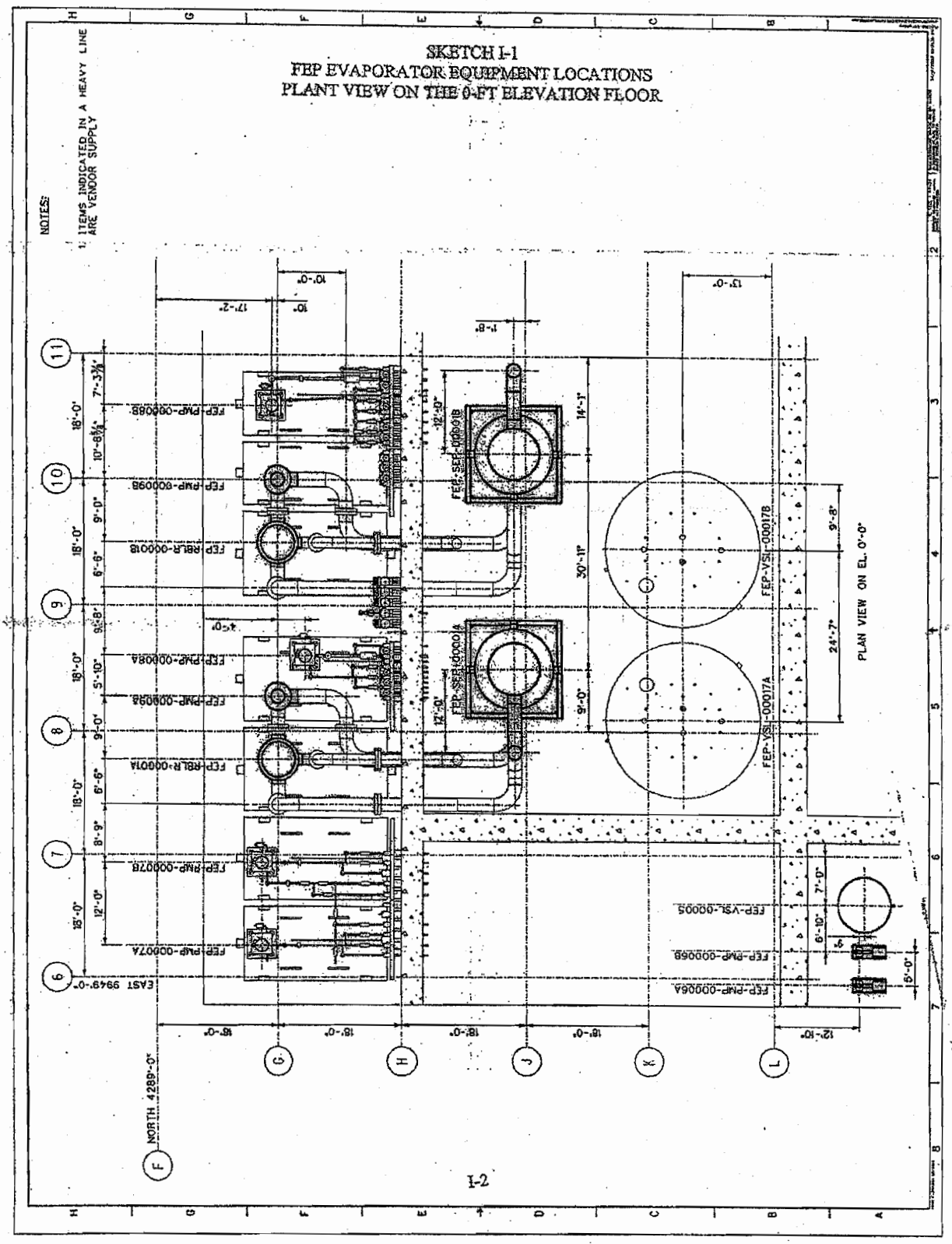
SKETCH I-1
FEP EVAPORATOR EQUIPMENT LOCATIONS
PLANT VIEW ON THE 0-FT ELEVATION FLOOR
NOTES:
1. ITEMS INDICATED IN A HEAVY LINE ARE VENDOR SUPPLY
PLAN VIEW ON EL. 0'-0"
FEP-PMP-000068
FEP-PMP-000098
FEP-RBLR-000018
FEP-PMP-000084
FEP-PMP-000098
FEP-RBLR-000074
FEP-PMP-000078
FEP-PMP-000074
FEP-SEP-000018
FEP-SEP-000014
FEP-VSL-00017B
FEP-VSL-00017A
FEP-VSL-00005
FEP-PMP-000068
FEP-PMP-000084
NORTH 4289'-0"
EAST 9949'-0"

I-2

SKETCH I-2
FEP EVAPORATOR EQUIPMENT LOCATIONS
PLANT VIEW ON THE 56-FT ELEVATION FLOOR

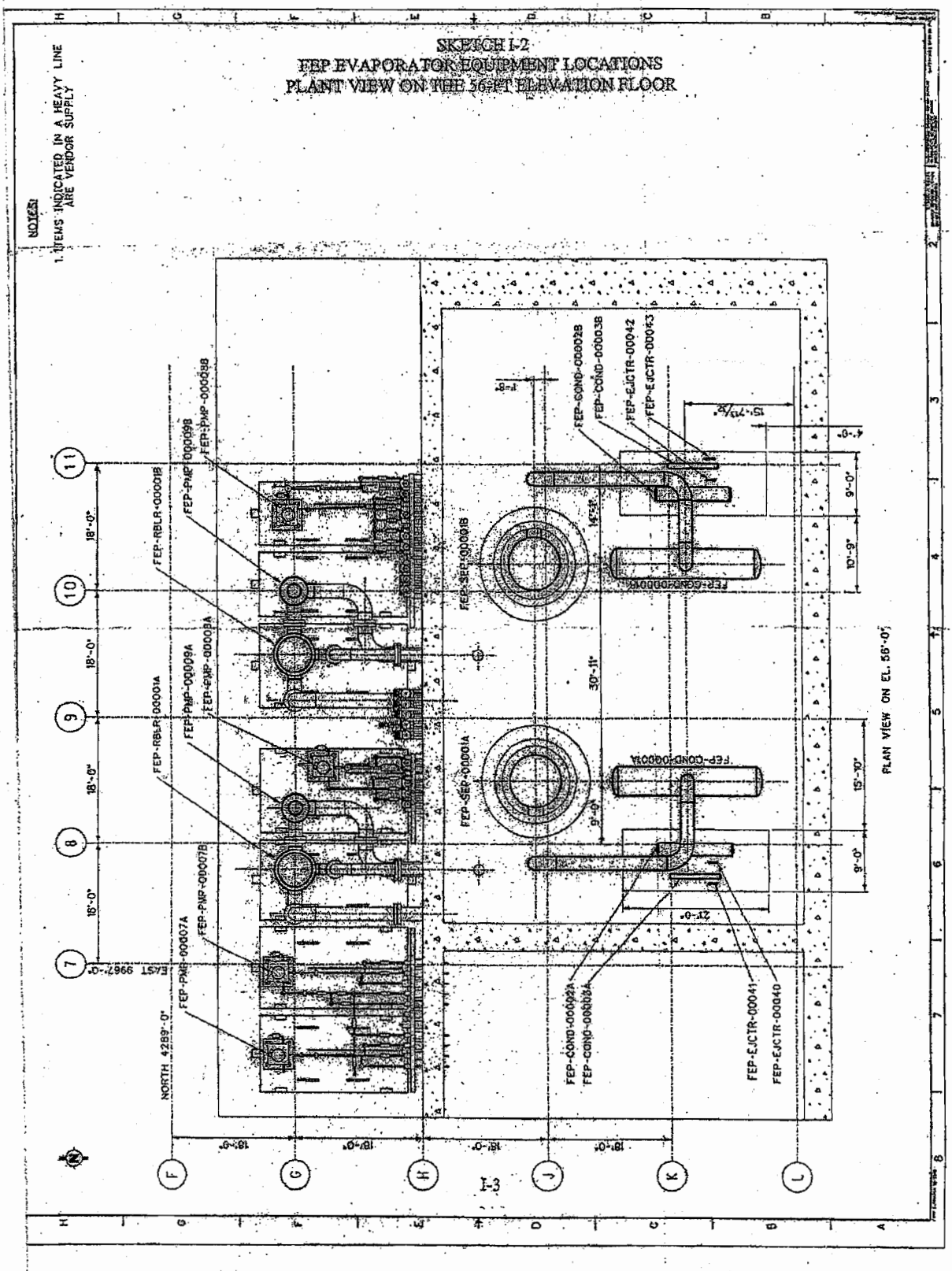

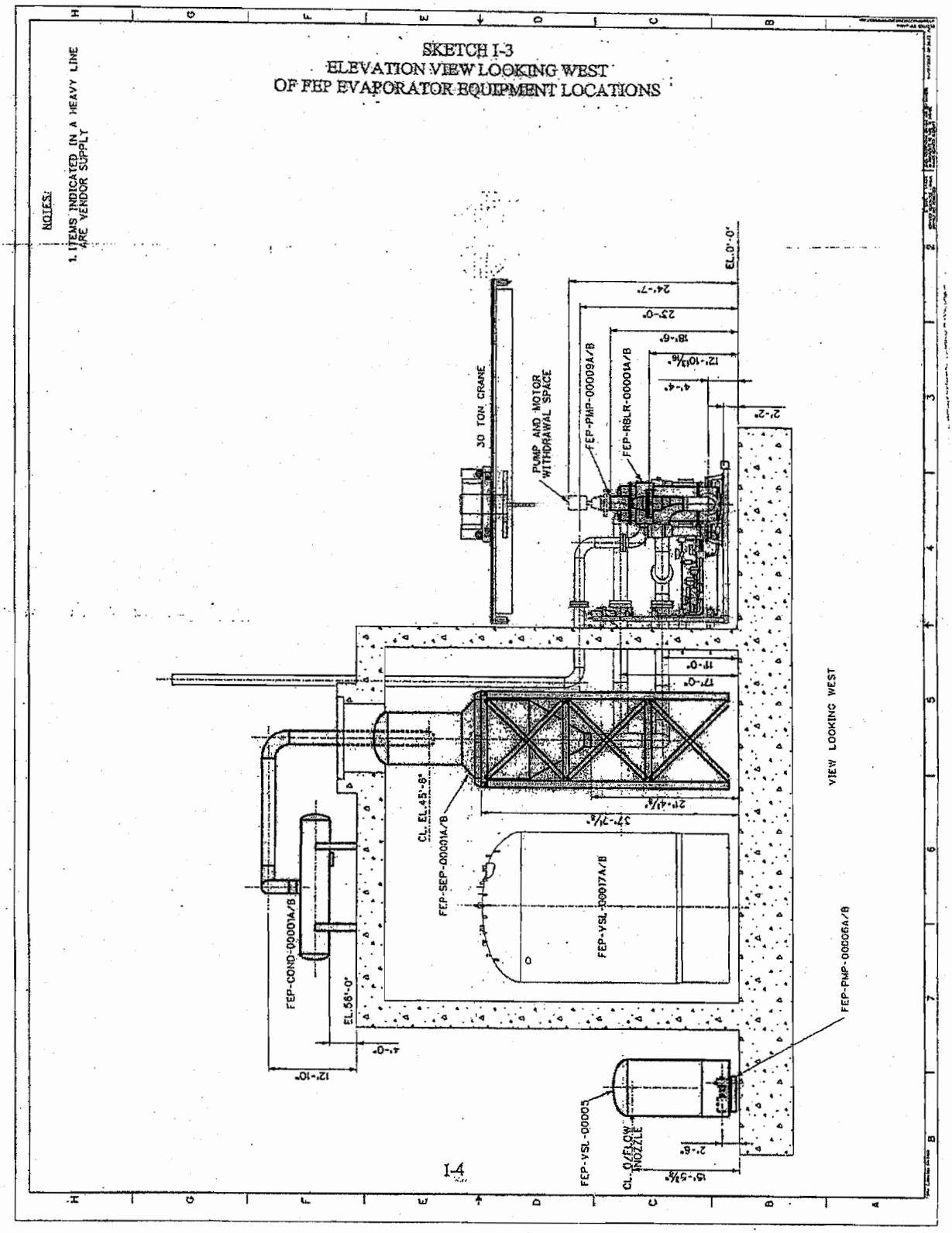
SKETCH I-3
ELEVATION VIEW LOOKING WEST
OF FEP EVAPORATOR EQUIPMENT LOCATIONS
NOTES:
1. ITEMS INDICATED IN A HEAVY LINE ARE VENDOR SUPPLY
30 TON CRANE
PUMP AND MOTOR WITHDRAWAL SPACE
FEP-PMP-00009A/B
FEP-RBLR-00001A/B
EL.0'-0"
24'-7"
23'-0"
18'-6"
12'-10 13/16"
4'-4"
2'-2"
17'-0"
17'-0"
CL. EL.45'-6"
FEP-SEP-00001A/B
21'-4 1/2"
37'-7 1/2"
FEP-VSL-00017A/B
FEP-COND-00001A/B
EL.56'-0"
4'-0"
12'-10"
FEP-VSL-00005
CL. OUTFLOW NOZZLE
2'-6"
15'-5 3/8"
FEP-PMP-00006A/B
VIEW LOOKING WEST

SKETCH I-4
ELEVATION VIEW LOOKING NORTH
OF FEP EVAPORATOR EQUIPMENT LOCATIONS

NOTES:
1. ITEMS INDICATED IN A HEAVY LINE ARE VENDOR SUPPLY

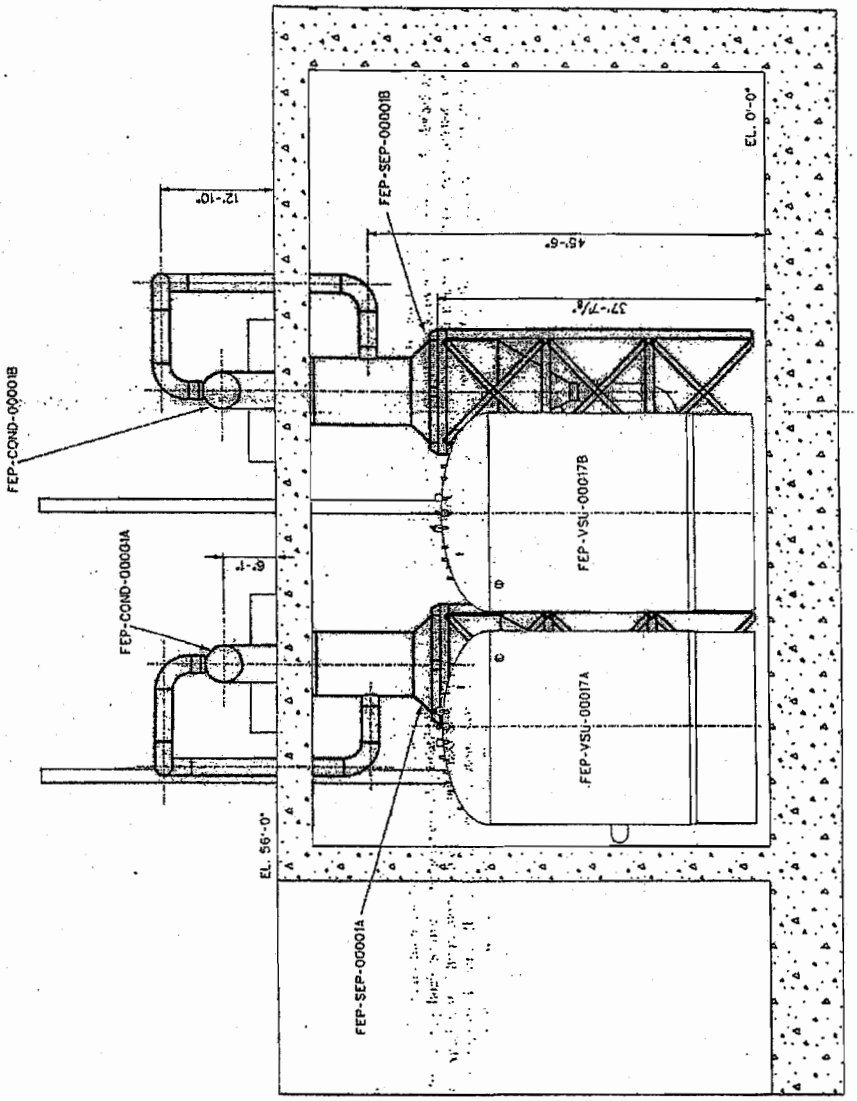

SKETCH I-5
ELEVATION VIEW LOOKING SOUTH
OF FEP EVAPORATOR EQUIPMENT LOCATIONS

NOTES:
1. ITEMS INDICATED IN A HEAVY LINE ARE VENDOR SUPPLY

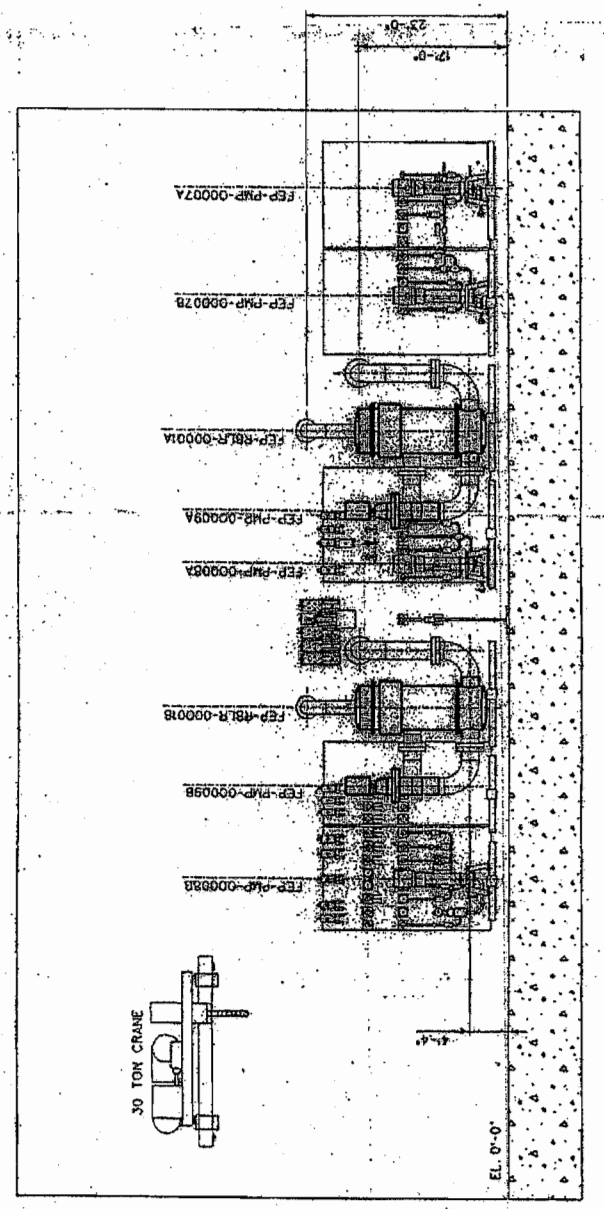

I-6

24590-G04B-F00019 Rev 4 (2/12/2008)

Ref: 24590-WTP-3DP-G04B-00049

N

SKETCH F-6
ISOMETRIC SKETCH FOR FEP EVAPORATOR FEED
FROM FEED VESSEL TO FEEP PUMP

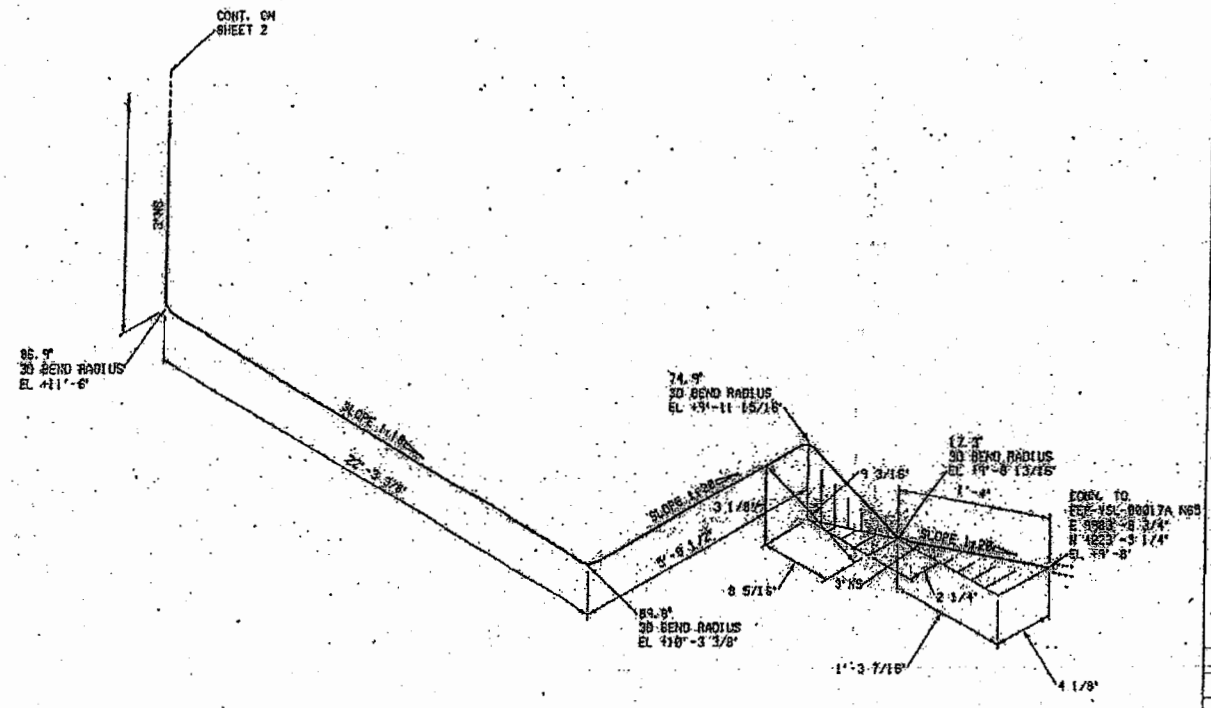

NOTES:

1. FOR GENERAL NOTES AND LEGEND SEE DWG. 24590-PTF-P3-P867-00000.
2. SEE DWG. 24590-BOF-C2-C121-00002 FOR CONVERSION FROM PTF FACILITY ELEVATIONS TO SITE ELEVATIONS. PTF FACILITY ELEVATION 0'-0" EQUALS SITE ELEVATION 678'-0" MSL.

SHOP MATERIALS

PART NO	COMPONENT DESCRIPTION	N.S. (INCHES)	QTY	SECRTEL STK CODE
	PIPE			
1	PIPE, A312TP316/316L, SMLS, SCH80S, BBE	3	25'-4"	PPPCR0000X02
2	PIPE, A312TP316/316L, SMLS, SCH80S, BBE	3	3'-7"	PPPCQ0000T02

24590-PTF-3PS-MEVV-T0001, Rev. 3
Forced Circulation Vacuum Evaporator System

PRELIMINARY

REV	DATE	DESCRIPTION	DRN	CHKD	STRESS	RVWD	APVD

REVISION HISTORY

RIVER PROTECTION PROJECT
WASTE TREATMENT PLANT
2435 STEVENS CENTER PLACE
RICHLAND, WA 99352

CONTRACT No. DE-AC27-01RV14136

P&ID: NO DATA | CONST. WORK AREA:

PRETREATMENT FACILITY
ISOMETRIC

LINE No. FEP-PZ-00239-S12A-3 | PIPE SPEC: S12A

DWG No. | REV

CONTENT APPLICABLE TO ALARA? ☐ YES ☐ NO
ADR NO. REV.

QUALITY LEVEL * | SEISMIC CAT. *

I-7

FORM: ISOBRDR.DGN 02/2003 | COMPUTER GENERATED - MANUAL CHANGES NOT PERMITTED | PCF File: FSPP200239 | PLOTTED BY: grining | PLOT DATE: 03/22/2003 10:47:22 AM

ISOBRDR.DGN

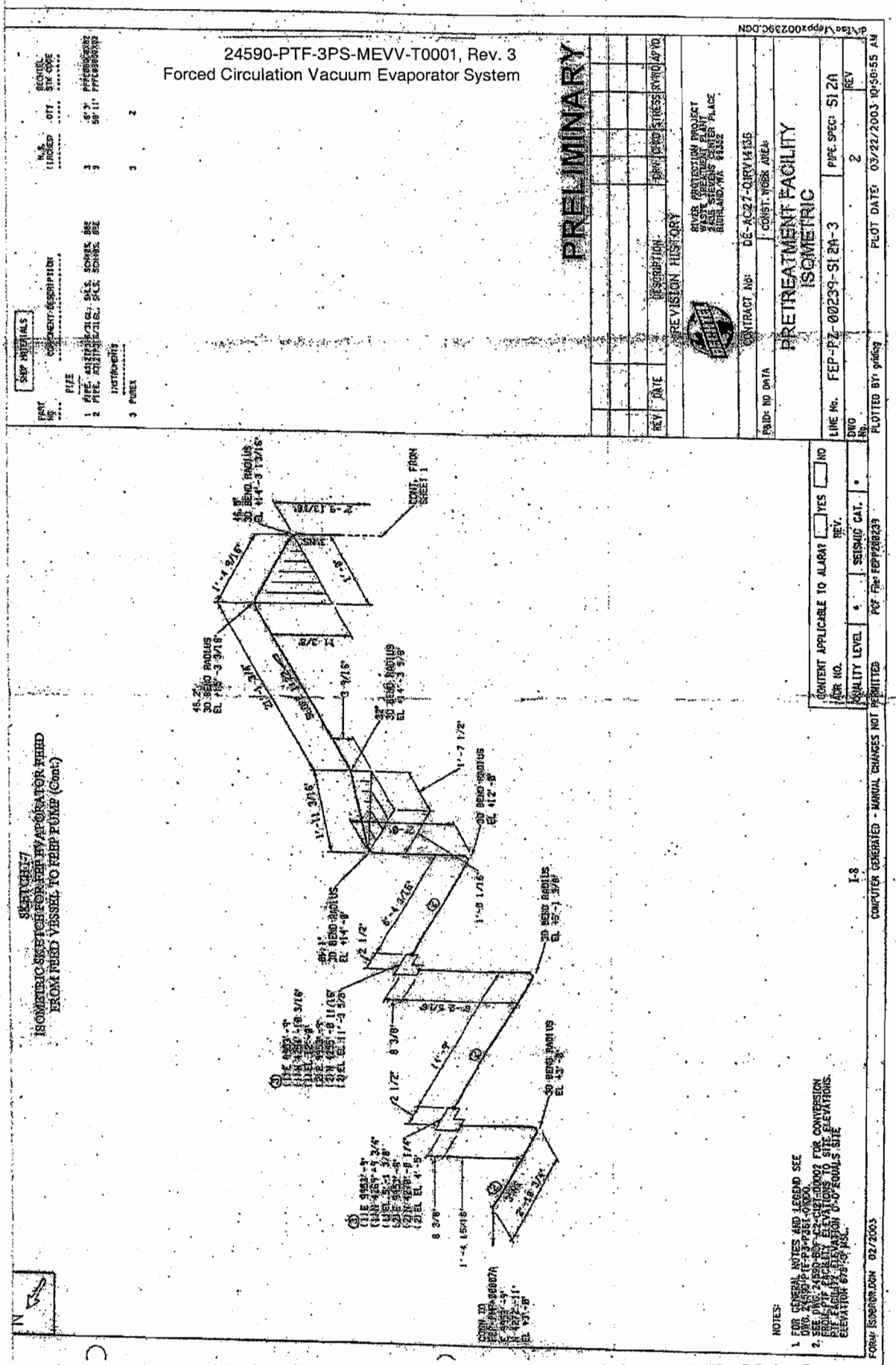
SKETCH 1-7
ISOMETRIC SKETCH FOR FEP EVAPORATOR FEED
FROM FEED VESSEL TO FEEP PUMP (Cont.)
PRELIMINARY
REVISION HISTORY
RIVER PROTECTION PROJECT
WASTE TREATMENT PLANT
2435 STEVENS CENTER PLACE
RICHLAND, WA 99352
CONTRACT NO: DE-AC27-01RV14136
CONST. WORK AREA:
PRETREATMENT FACILITY
ISOMETRIC
LINE No. FEP-PZ-00239-S12A-3
PIPE SPEC: S12A
PLOT DATE: 03/22/2003 10:50:55 AM
NOTES:
1. FOR GENERAL NOTES AND LEGEND SEE DWG. 24590-PTF-P3-P361-00000.
2. SEE DWG. 24590-BOF-C2-C121-00002 FOR CONVERSION FROM PTF FACILITY ELEVATIONS TO SITE ELEVATIONS. PTF FACILITY ELEVATION 0'-0" EQUALS SITE ELEVATION 679'-0" MSL.
COMPUTER GENERATED - MANUAL CHANGES NOT PERMITTED
I-8

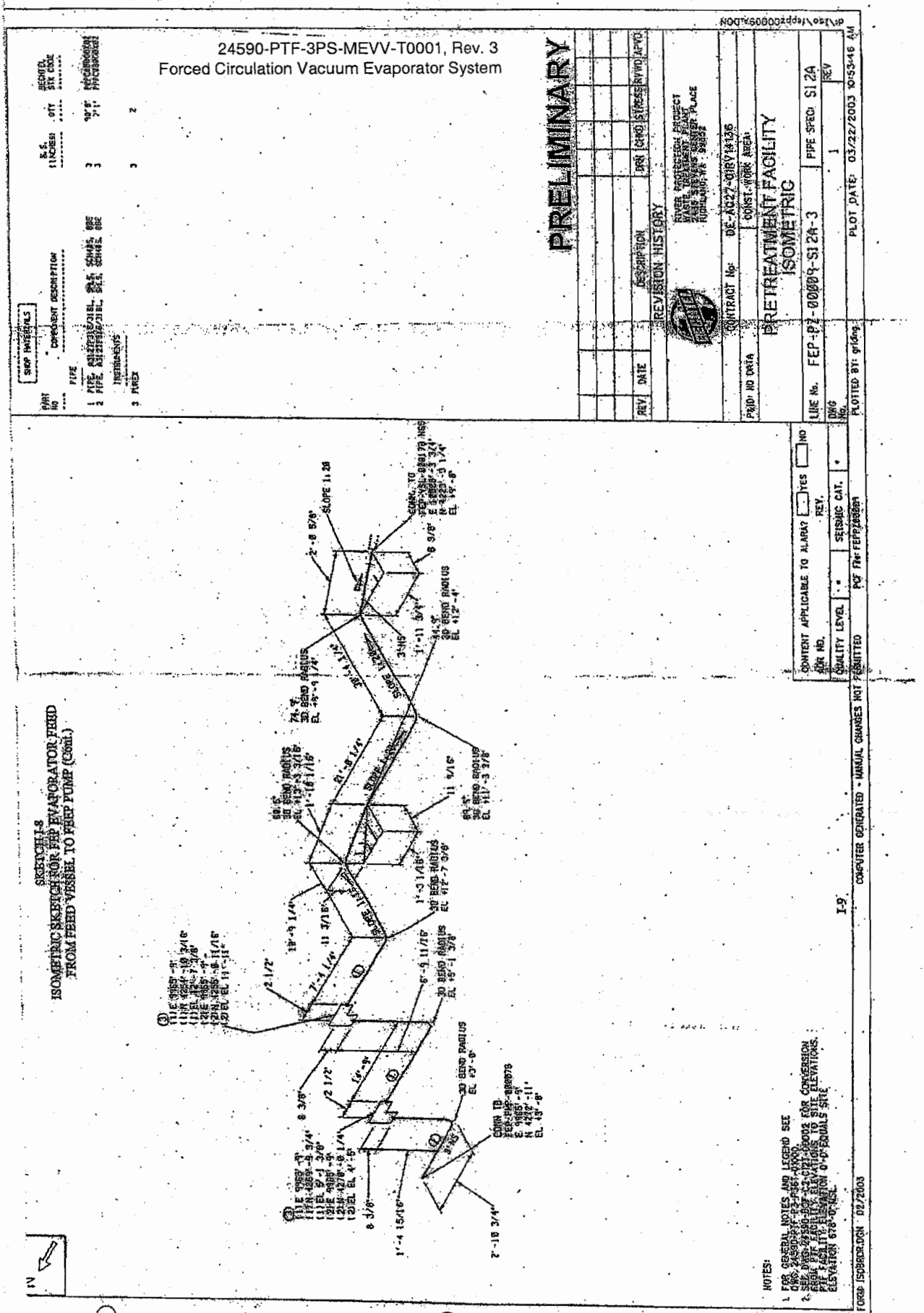
SKETCH I-8
ISOMETRIC SKETCH FOR FEP EVAPORATOR FEED FROM FEED VESSEL TO FEEP PUMP (Cont.)
PRELIMINARY
REVISION HISTORY
PRETREATMENT FACILITY
ISOMETRIC
LINE No. FEP-PZ-00009-S12A-3
PIPE SPEC: S12A
PLOT DATE: 03/22/2003 10:53:46 AM
NOTES:
1. FOR GENERAL NOTES AND LEGEND SEE DWG. 24590-PTF-PZ-P361-00000.
2. SEE DWG. 24590-BOF-C2-CRT-00002 FOR CONVERSION FROM PTF FACILITY ELEVATIONS TO SITE ELEVATIONS. PTF FACILITY ELEVATION 0'-0" EQUALS SITE ELEVATION 678'-0" MSL.
COMPUTER GENERATED - MANUAL CHANGES NOT PERMITTED
FORM: ISOBRDR.DGN 02/2003

SKETCH 1-9
HOT CELL WALL PENETRATION LOCATION
SKETCH FOR FEP EVAPORATOR FEED

NOTES:

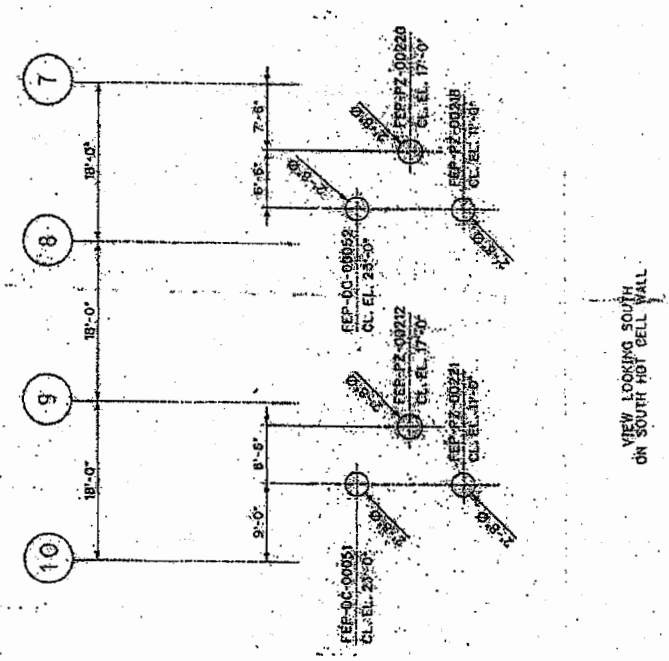

APPENDIX J

TLP EVAPORATOR EQUIPMENT SKIDS LOCATION AND LAYOUT SKETCHES

SKETCH J-1
TLP EVAPORATOR EQUIPMENT LOCATIONS
PLANT VIEW ON THE 0-FT ELEVATION FLOOR

NOTES:
1. ITEMS INDICATED IN A HEAVY LINE ARE VENDOR SUPPLY

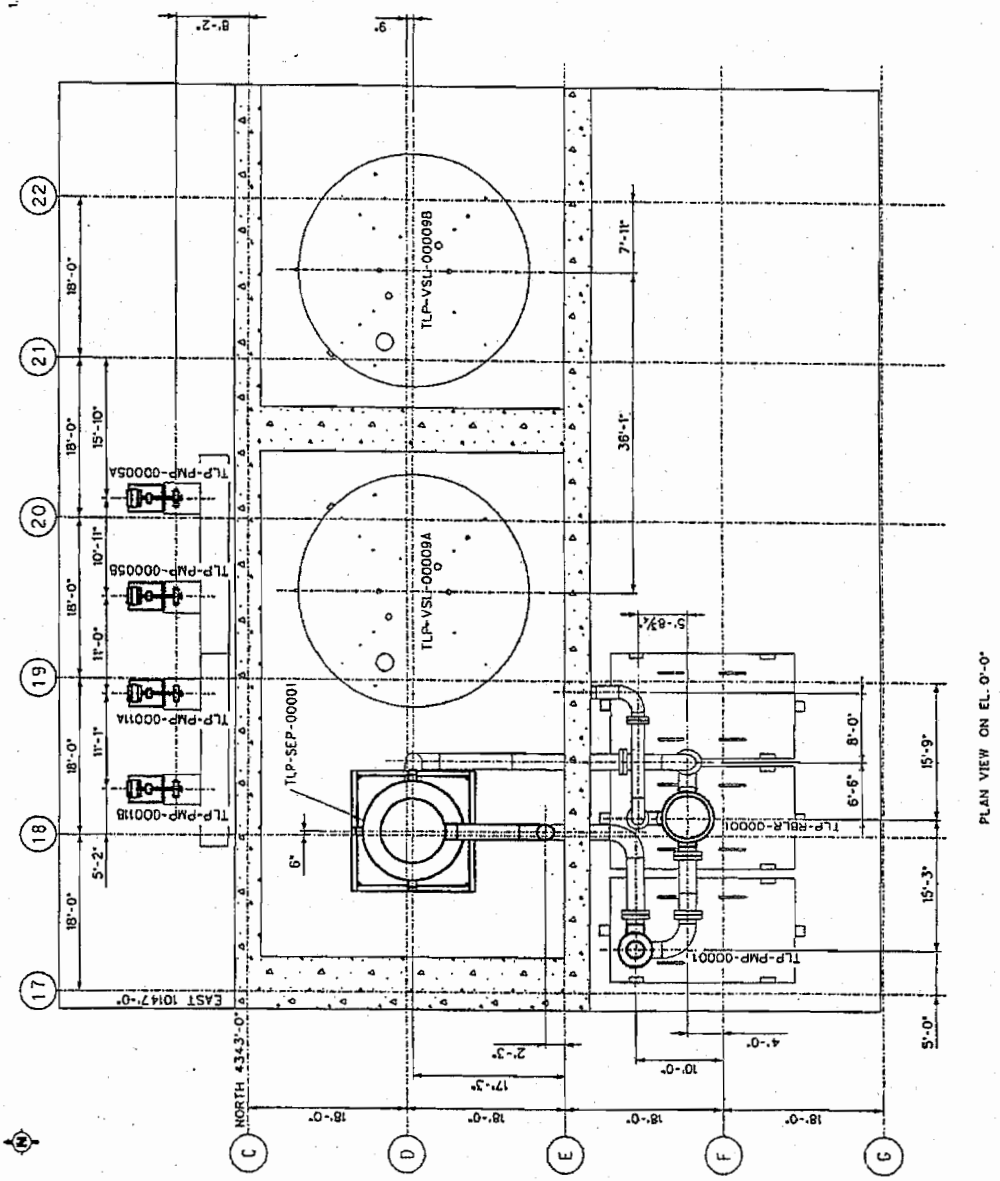

J-2

SKETCH J-2
TLP EVAPORATOR EQUIPMENT LOCATIONS
PLANT VIEW ON THE 56-FT ELEVATION FLOOR

NOTES:
1. ITEMS INDICATED IN A HEAVY LINE ARE VENDOR SUPPLY

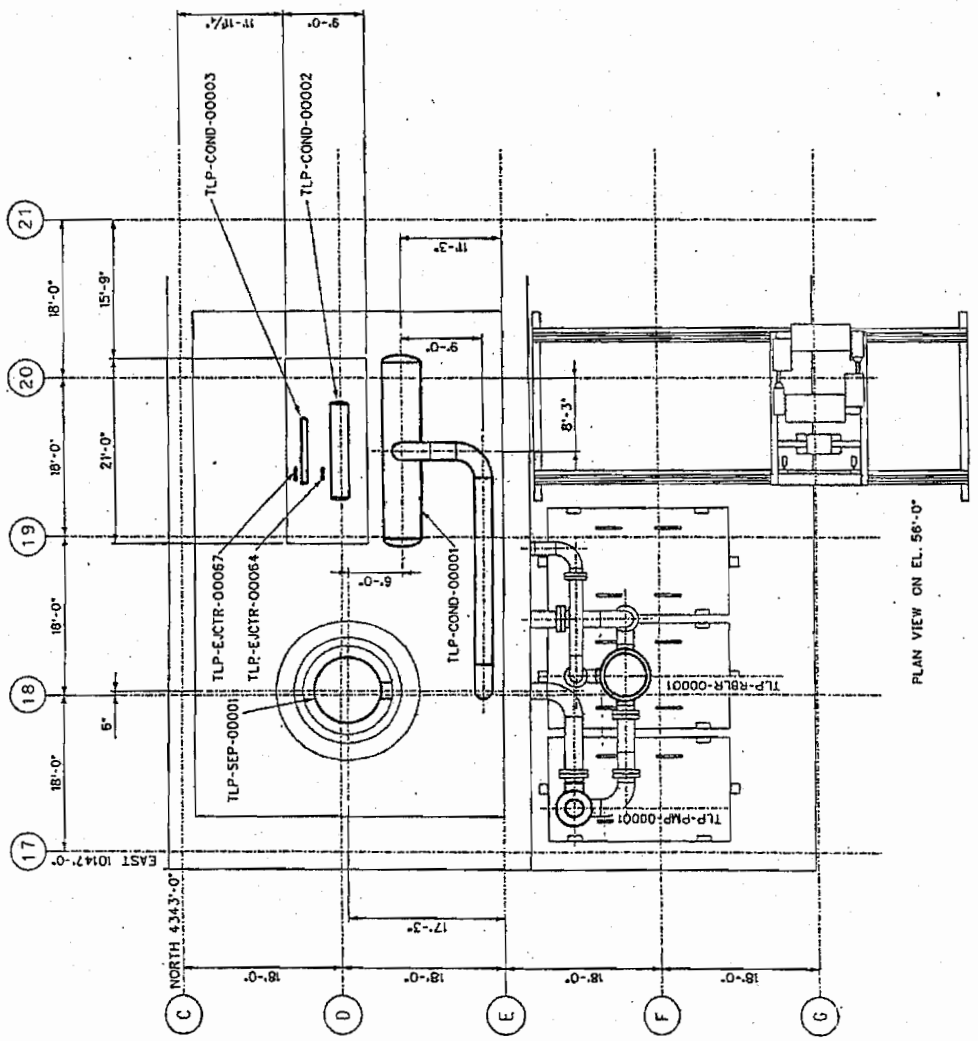

J-3

SKETCH J-3
ELEVATION VIEW LOOKING EAST
OF TLP EVAPORATOR EQUIPMENT LOCATIONS

NOTES:
1. ITEMS INDICATED IN A HEAVY LINE ARE VENDOR SUPPLY

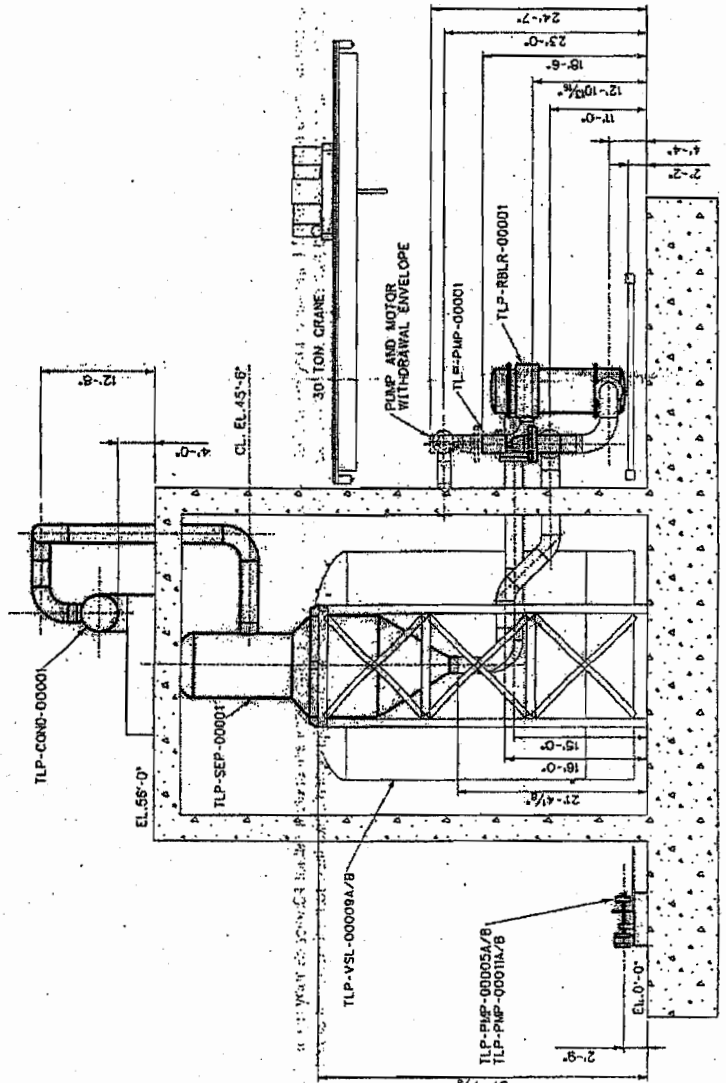

SKETCH J-4
ELEVATION VIEW LOOKING NORTH
OF TLP EVAPORATOR EQUIPMENT LOCATIONS

NOTES:
1. ITEMS INDICATED IN A HEAVY LINE ARE VENDOR SUPPLY.

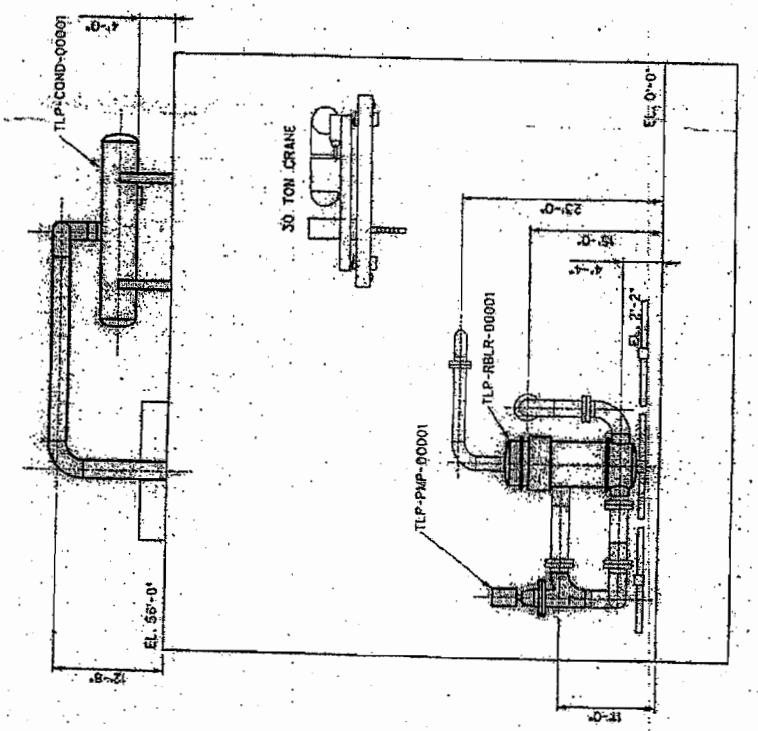

NOTES:
1. ITEMS INDICATED IN A HEAVY LINE ARE VENDOR SUPPLY

SKETCH J-5
ELEVATION VIEW LOOKING SOUTH
OF TLP EVAPORATOR EQUIPMENT LOCATIONS

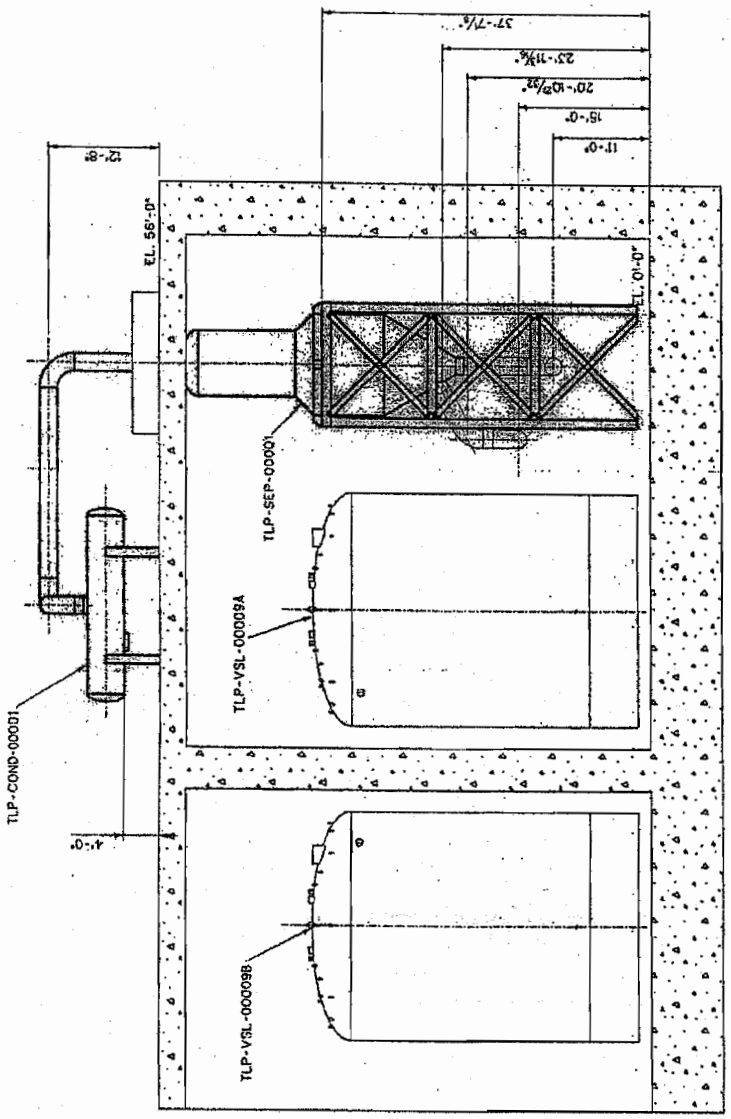

SKETCH J-6
PLANT VIEW ON THE 0-FT ELEVATION
OF TLP CONDENSATE EQUIPMENT LOCATIONS

NOTES:
1. ITEMS INDICATED IN A HEAVY LINE ARE VENDOR SUPPLY

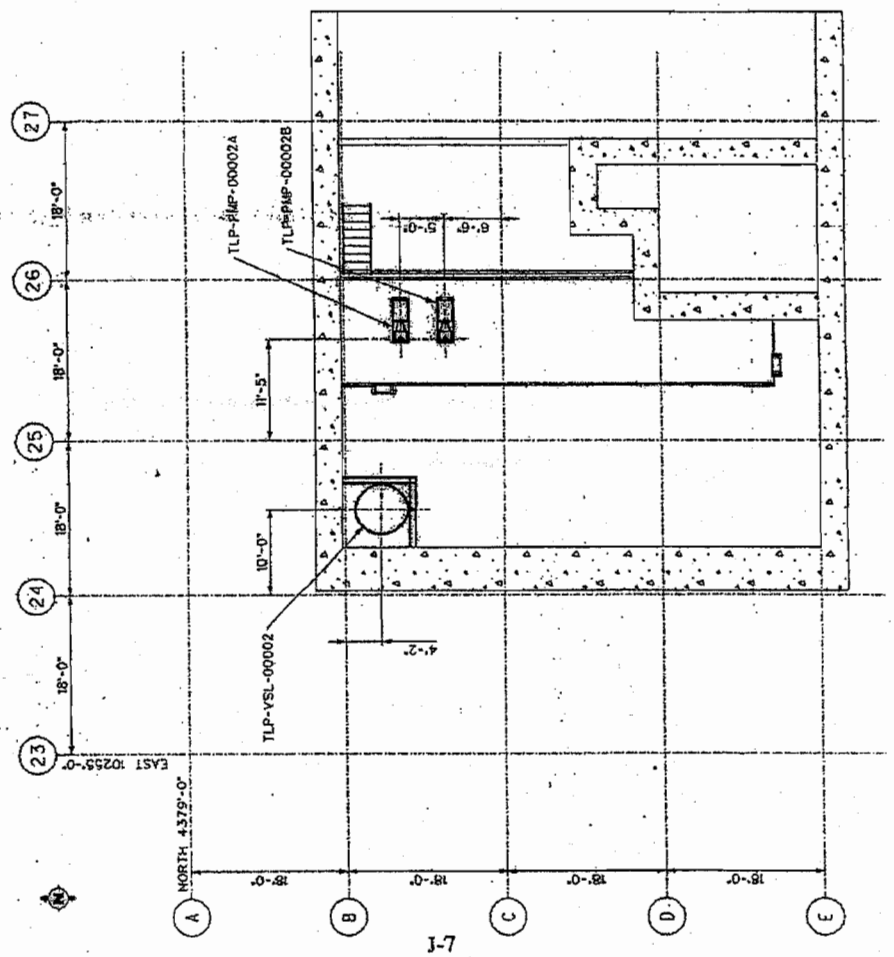

NOTES:

1. ITEMS INDICATED IN A HEAVY LINE ARE VENDOR SUPPLY

SKETCH J-7
ELEVATION VIEW LOOKING NORTH
OF TLP CONDENSATE EQUIPMENT LOCATIONS

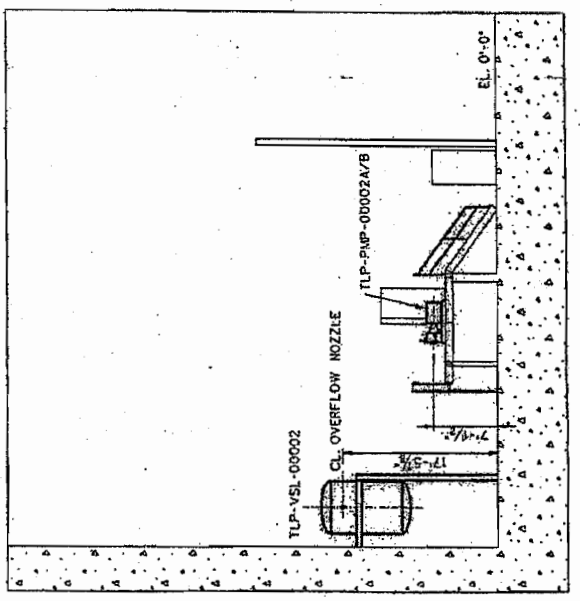

VIEW LOOKING NORTH

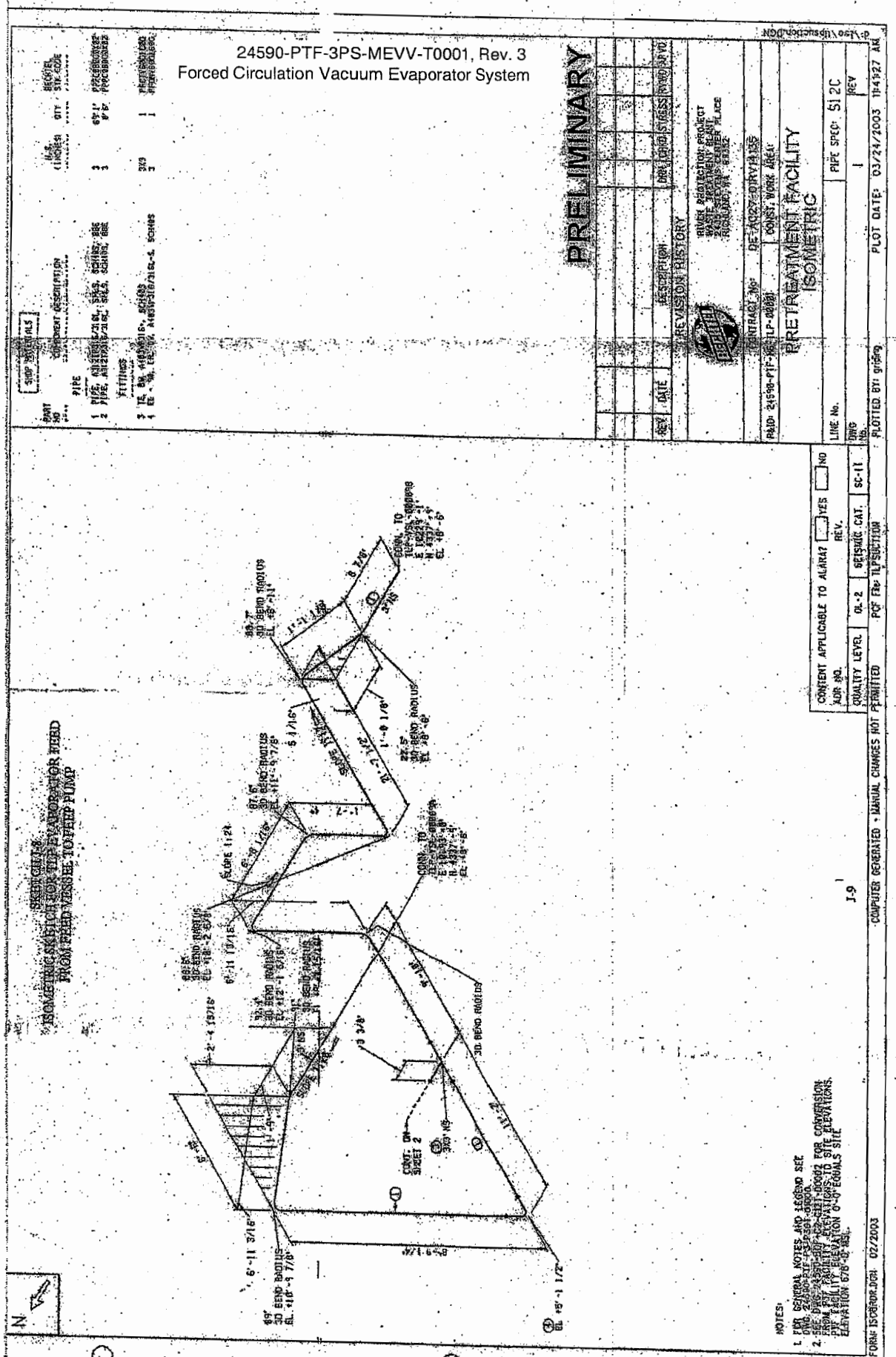
PRELIMINARY
PRETREATMENT FACILITY
ISOMETRIC
REVISION HISTORY
PIPE SPEC: S12C
PLOT DATE: 03/24/2003
COMPUTER GENERATED - MANUAL CHANGES NOT PERMITTED
NOTES:
1. FOR GENERAL NOTES AND LEGEND SEE DWG. 24590-PTF-P3-P301-00000.
2. SEE DWG. 24590-PTF-C2-C121-00002 FOR CONVERSION FROM PTF FACILITY ELEVATIONS TO SITE ELEVATIONS. PTF FACILITY ELEVATION 0'-0" EQUALS SITE ELEVATION 678'-0" MSL.
SKETCH 1-8
ISOMETRIC SKETCH FOR TLP EVAPORATOR FEED FROM FEED VESSEL TO FEED PUMP
CONT. ON SHEET 2
3D BEND RADIUS
SLOPE 1:24
CONN. TO TLP-VSL-000098
CONTENT APPLICABLE TO ALARA? YES NO
QUALITY LEVEL
SEISMIC CAT.
PLOTTED BY: grdrng
FORM: ISOBOR.DGN 02/2003

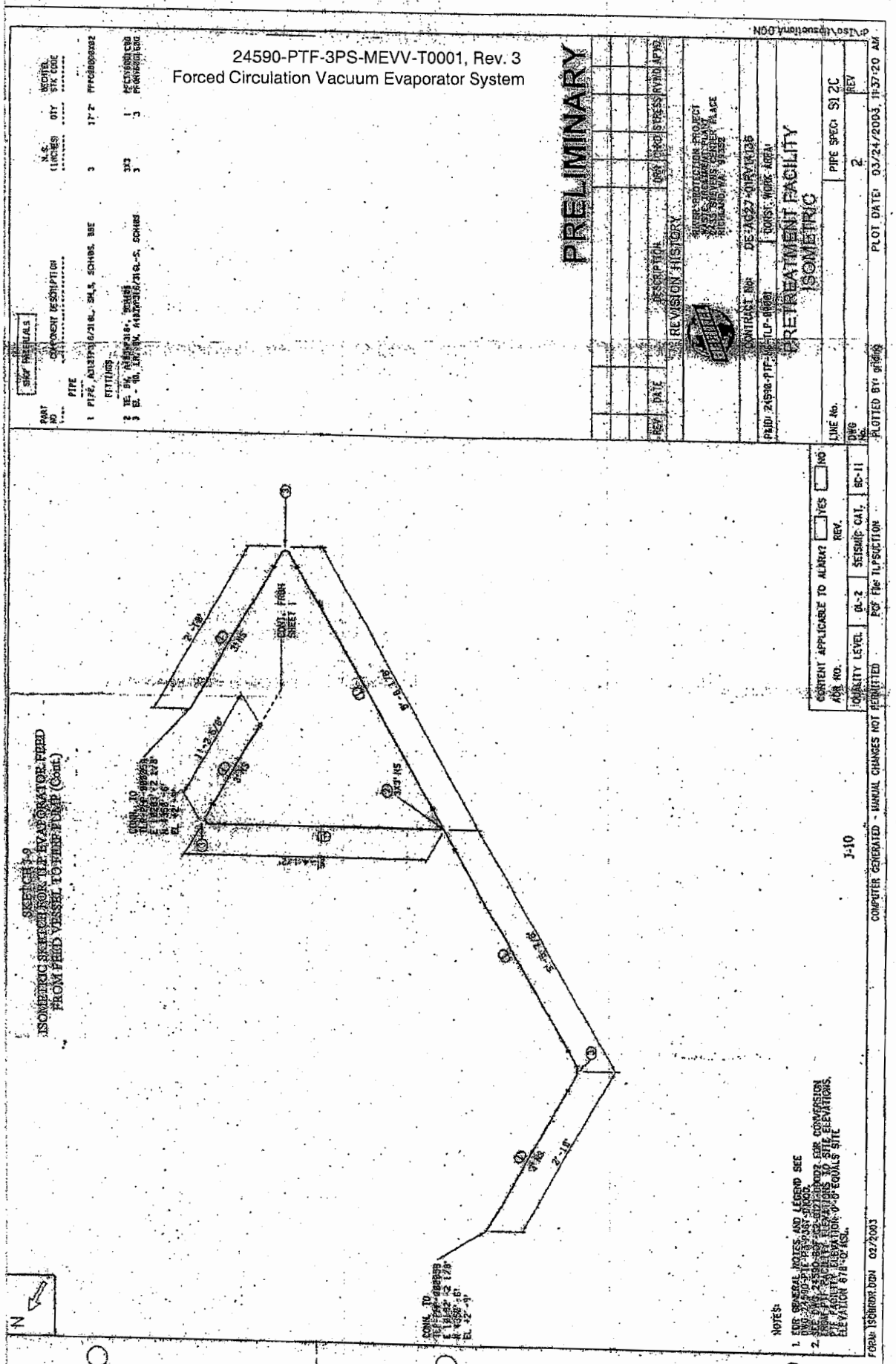
PRELIMINARY
REVISION HISTORY
PRETREATMENT FACILITY
ISOMETRIC
PIPE SPEC: S12C
PLOT DATE: 03/24/2003, 11:37:20 AM
SKETCH 3-9
ISOMETRIC SKETCH FOR TLP EVAPORATOR FEED
FROM FEED VESSEL TO FEED PUMP (Cont.)
J-10
COMPUTER GENERATED - MANUAL CHANGES NOT PERMITTED
NOTES:

SKETCH J-10
HOT CELL WALL PENETRATION LOCATION
SKETCH FOR TLP EVAPORATOR FEED

NOTES:

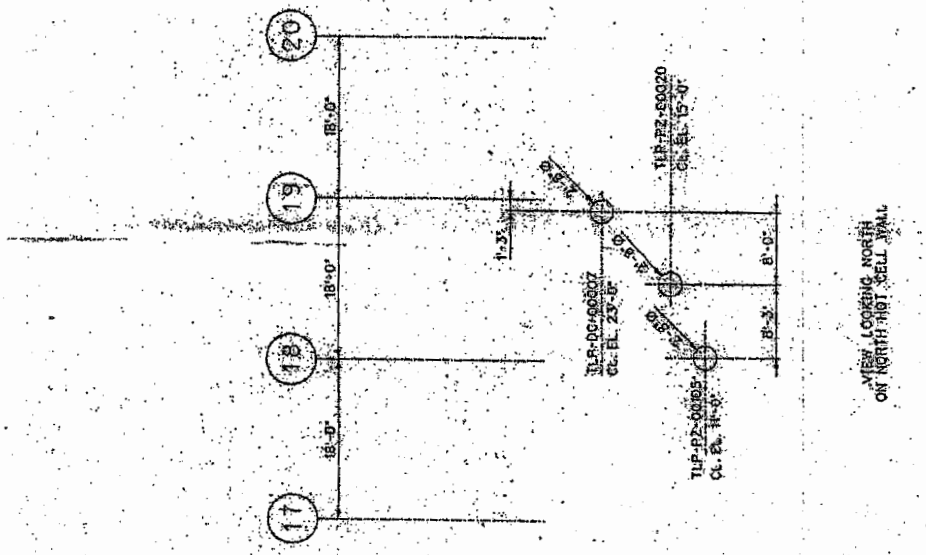

APPENDIX K

ANTIFOAM EQUIPMENT SKIDS LOCATION AND LAYOUT SKETCHES

SKETCH K-1
ANTIFOAM EQUIPMENT LOCATIONS
PLANT VIEW ON THE 77-FT ELEVATION FLOOR

NOTES:
1. ITEMS INDICATED IN A HEAVY LINE ARE VENDOR SUPPLY.

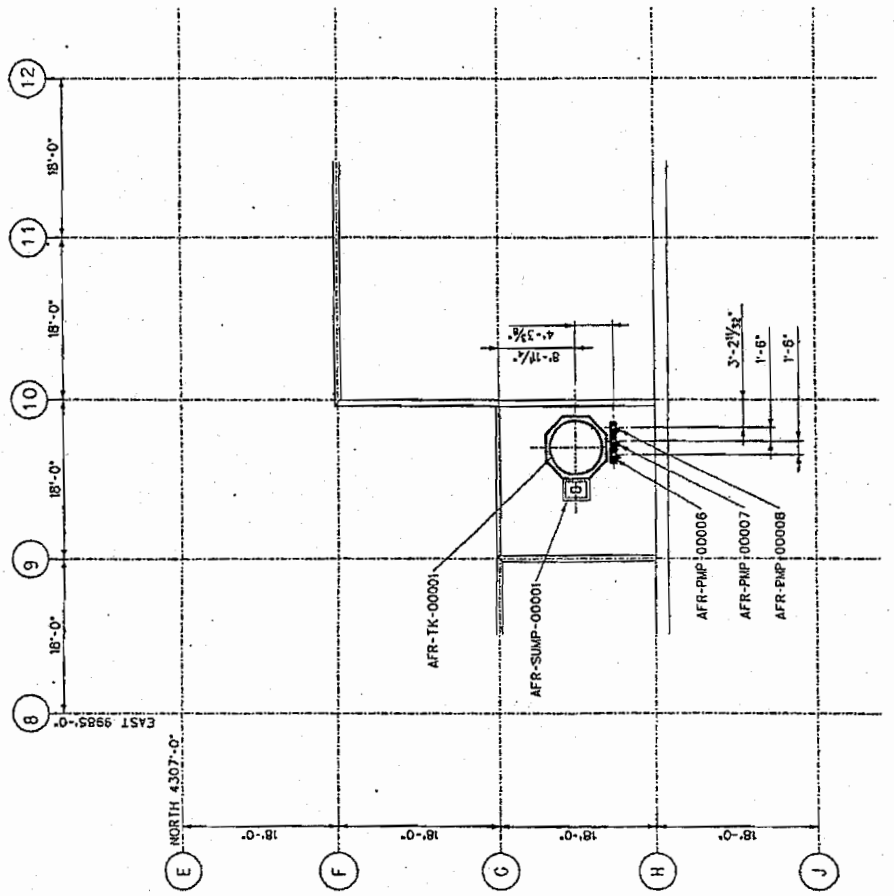

K-2

SKETCH K-2
ELEVATION VIEW LOOKING EAST
OF ANTIFOAM EQUIPMENT LOCATIONS

NOTES:
1. ITEMS INDICATED IN A HEAVY LINE ARE VENDOR SUPPLY.

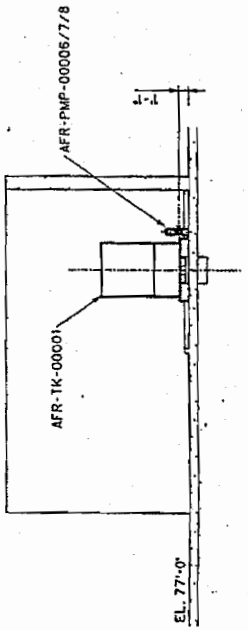

VIEW: LOOKING EAST

K-3

APPENDIX L

Reboiler Steam Condensate Transfer Stations Location and Layout Sketches

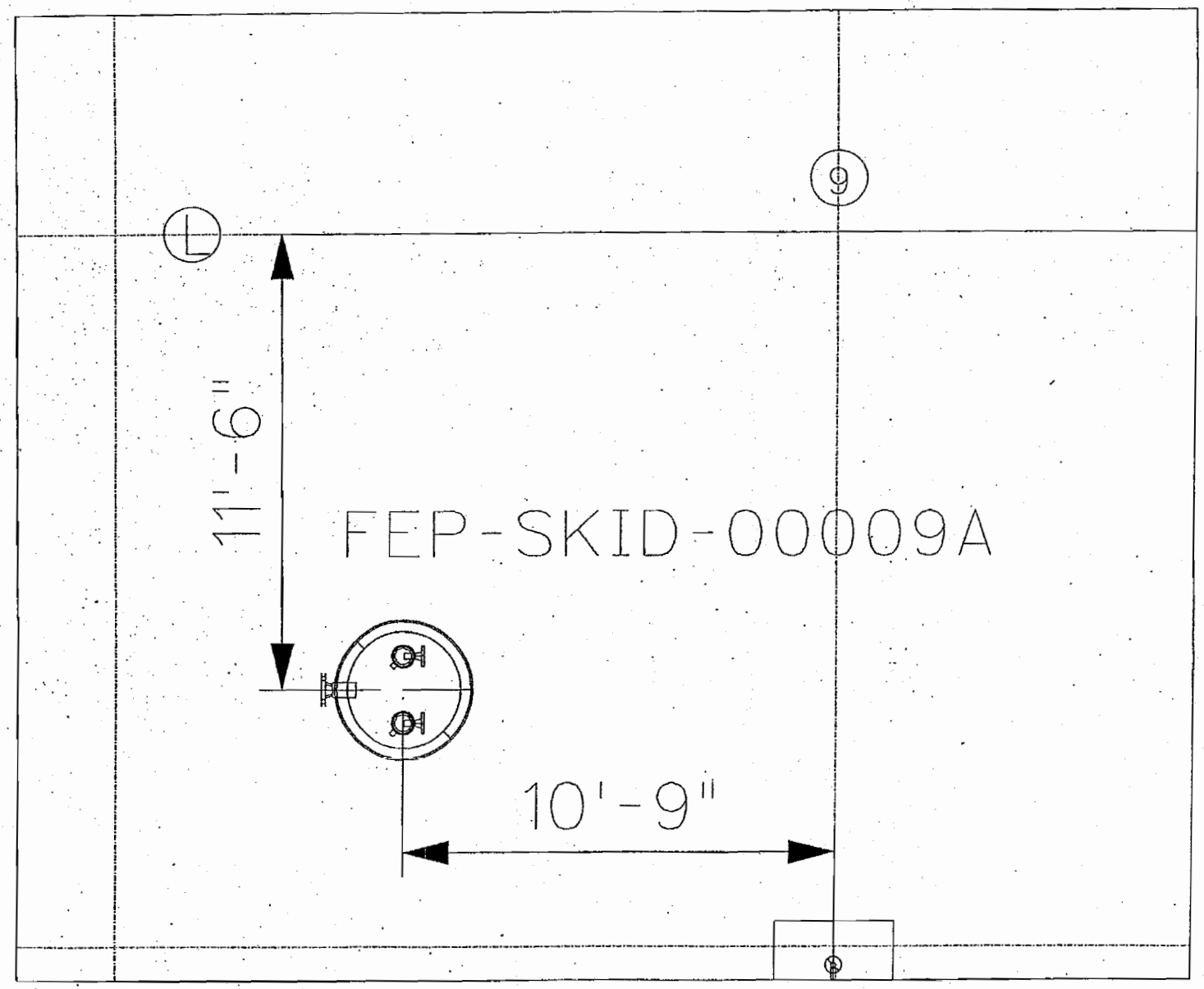

PLAN VIEW
@ 0'-0" Elevation

SKETCH L-2

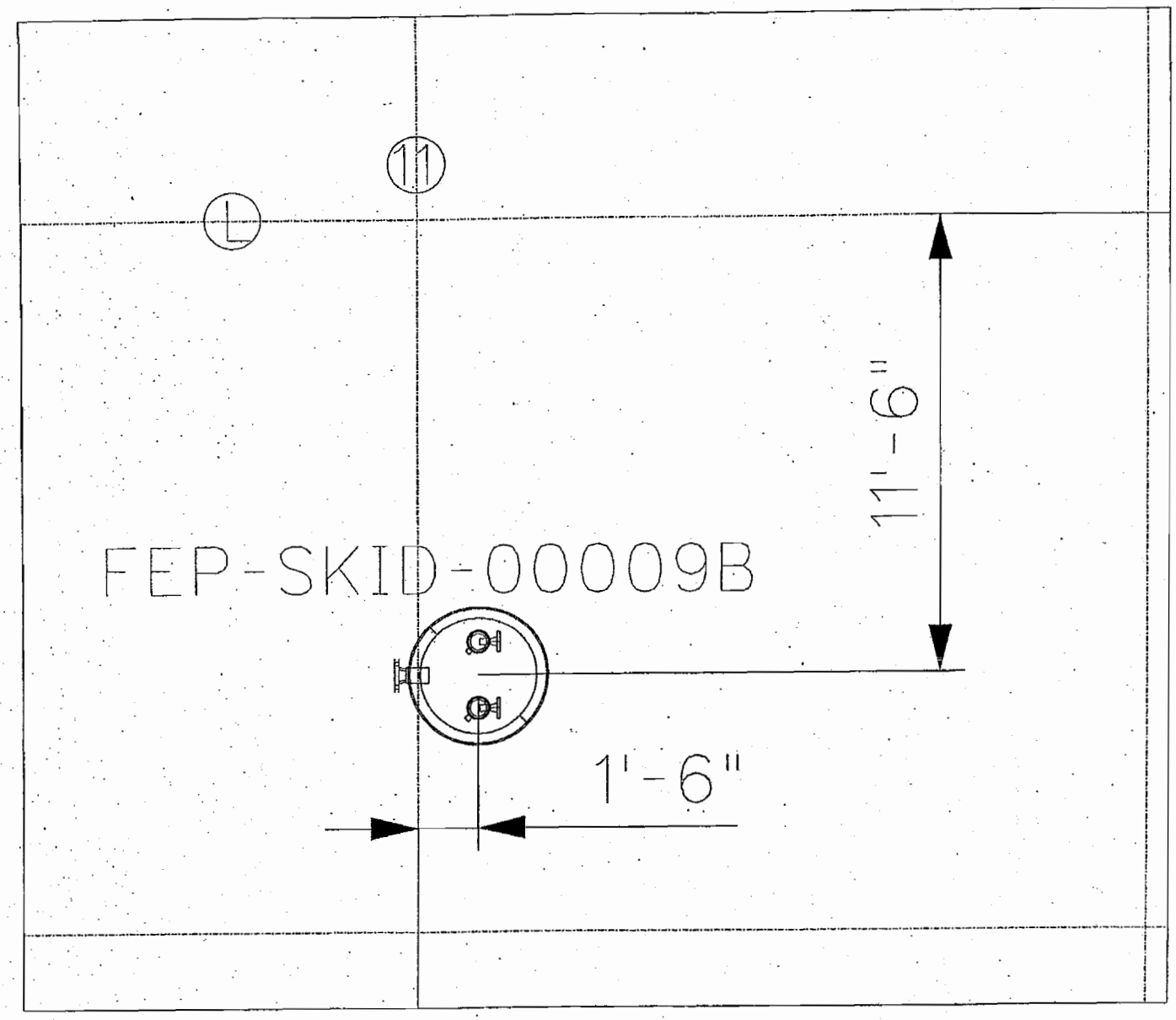

PLAN VIEW
@ 0'-0" Elevation

SKETCH L-3

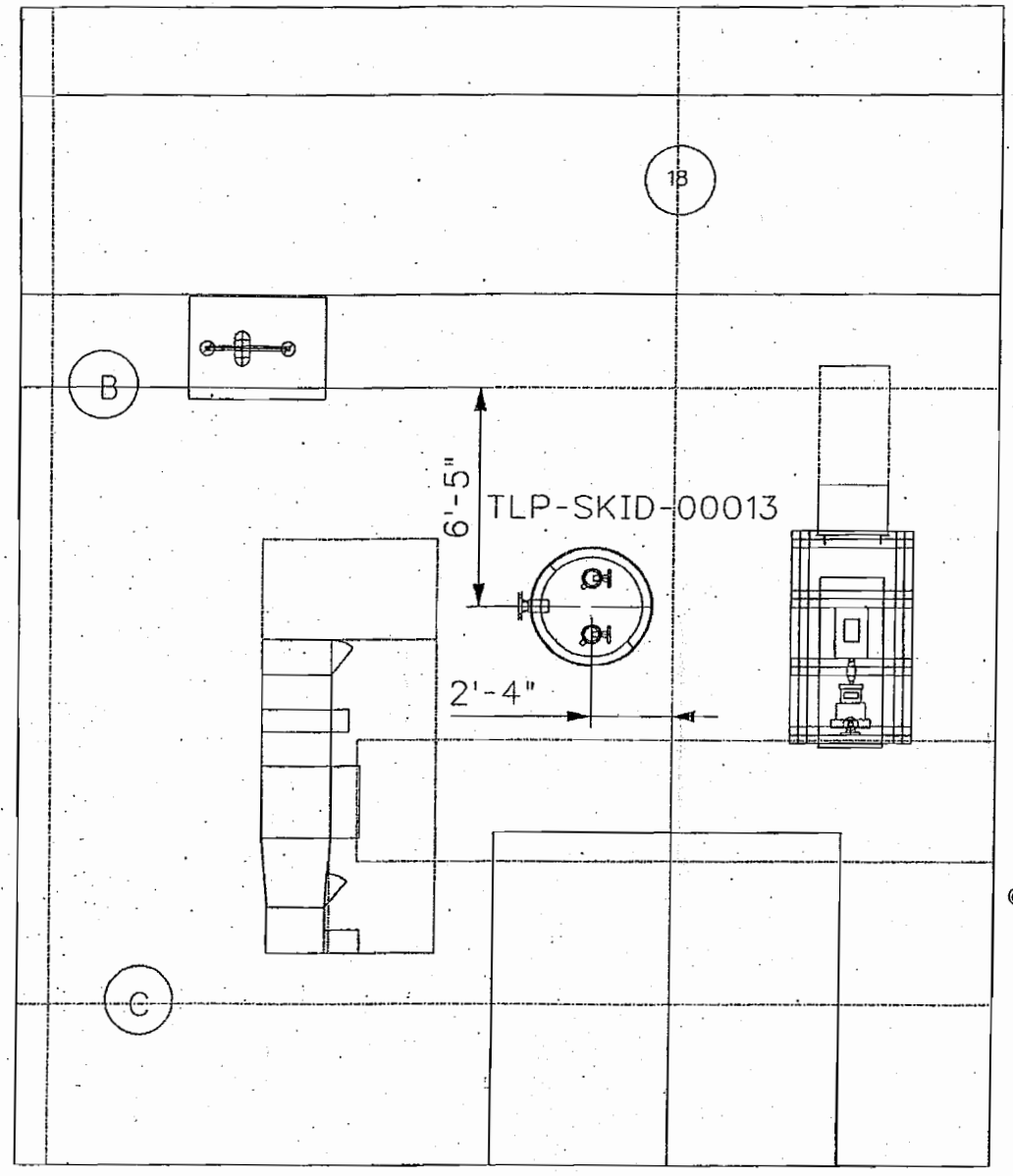

PLAN VIEW
@ 0'-0" Elevation

Sketch L-4
Location of 2"-150# R.F FLG inlet nozzle
on Roth Vessel FEP-VSL-00021 for DSH drain

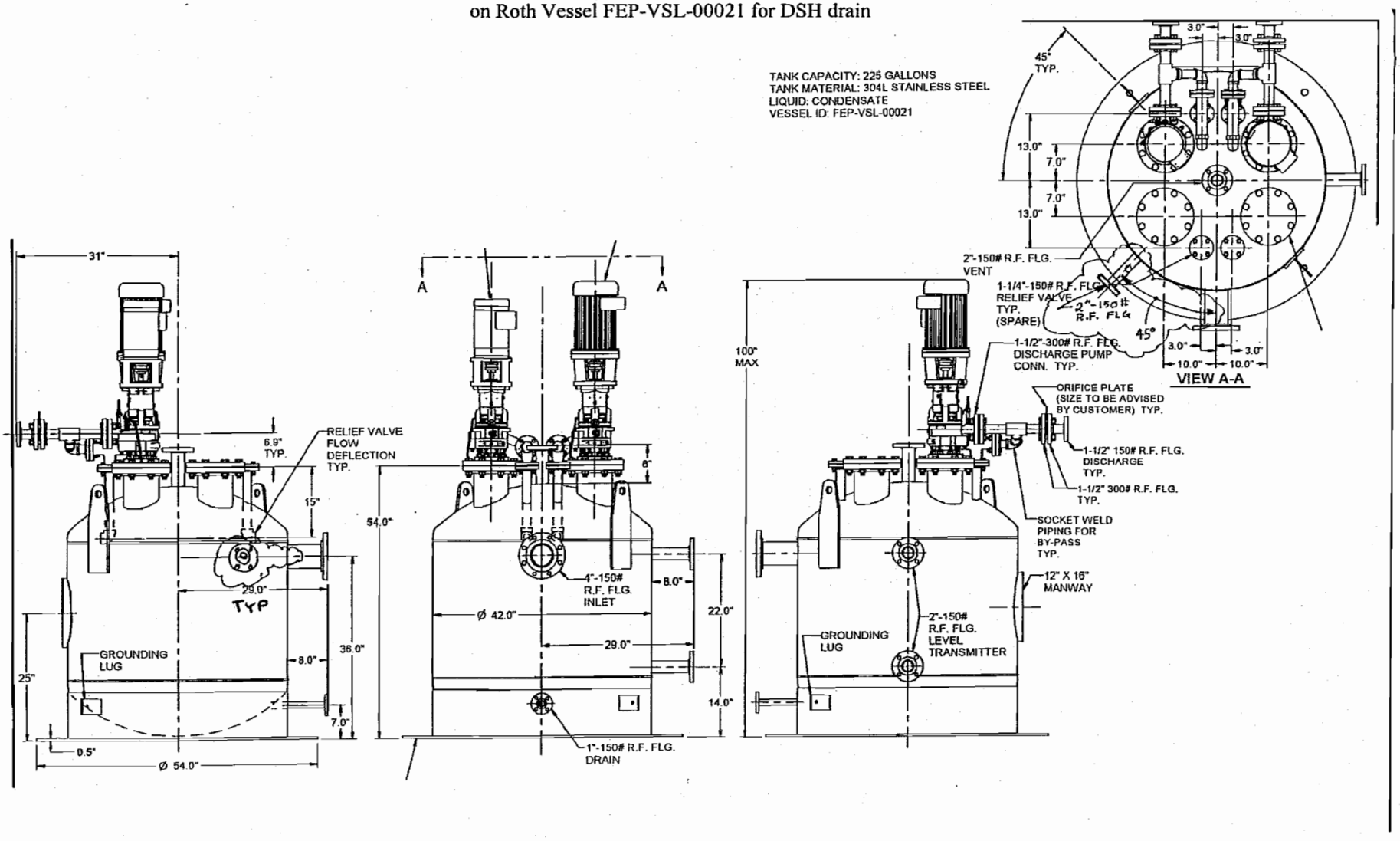

Sketch L-5
Location of 2"-150# R.F FLG inlet nozzle
on Roth Vessel FEP-VSL-00022 for DSH drain

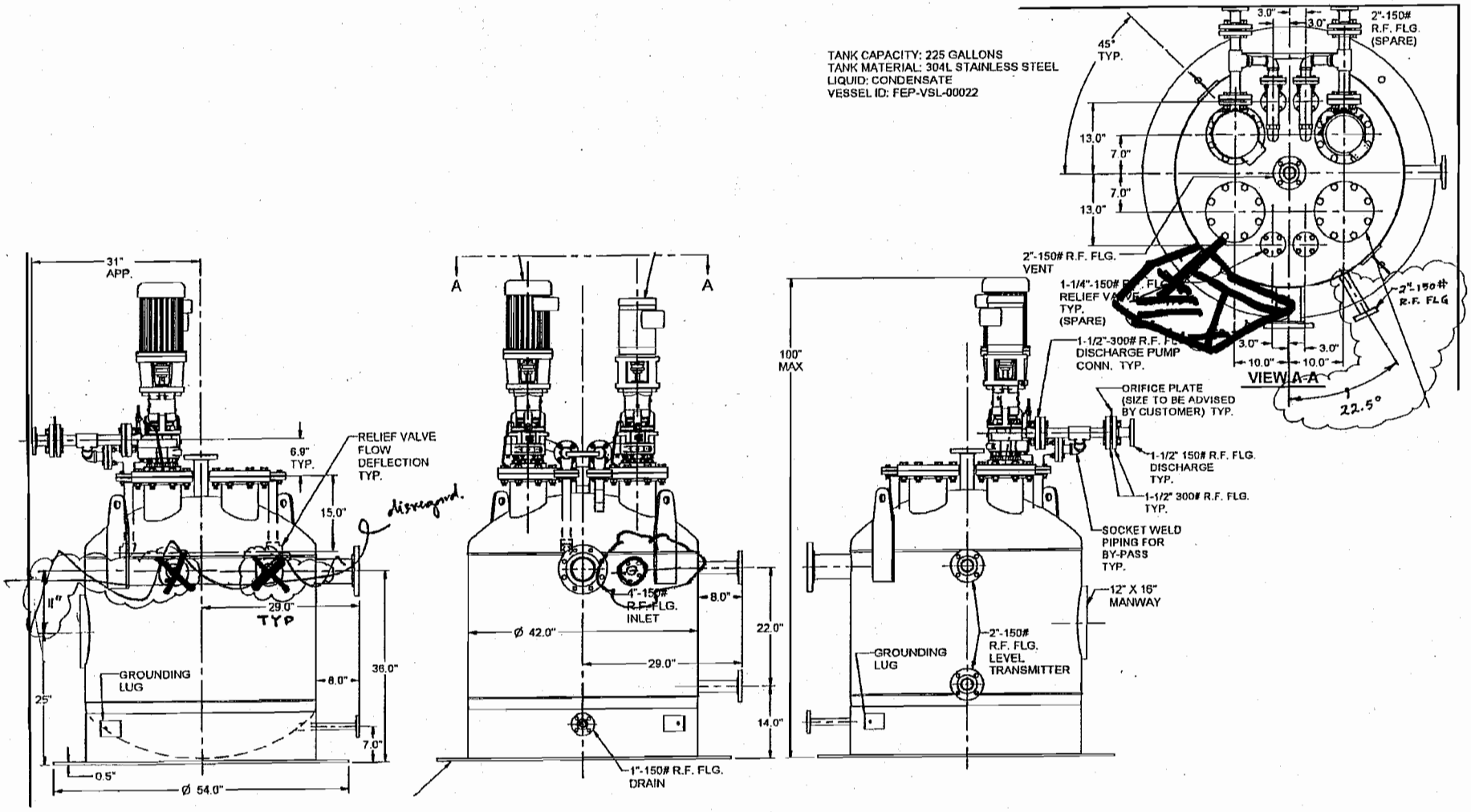

Sketch L-6
Location of 2"-150# R.F FLG inlet nozzle
on Roth Vessel TLP-VSL-00047 for DSH drain

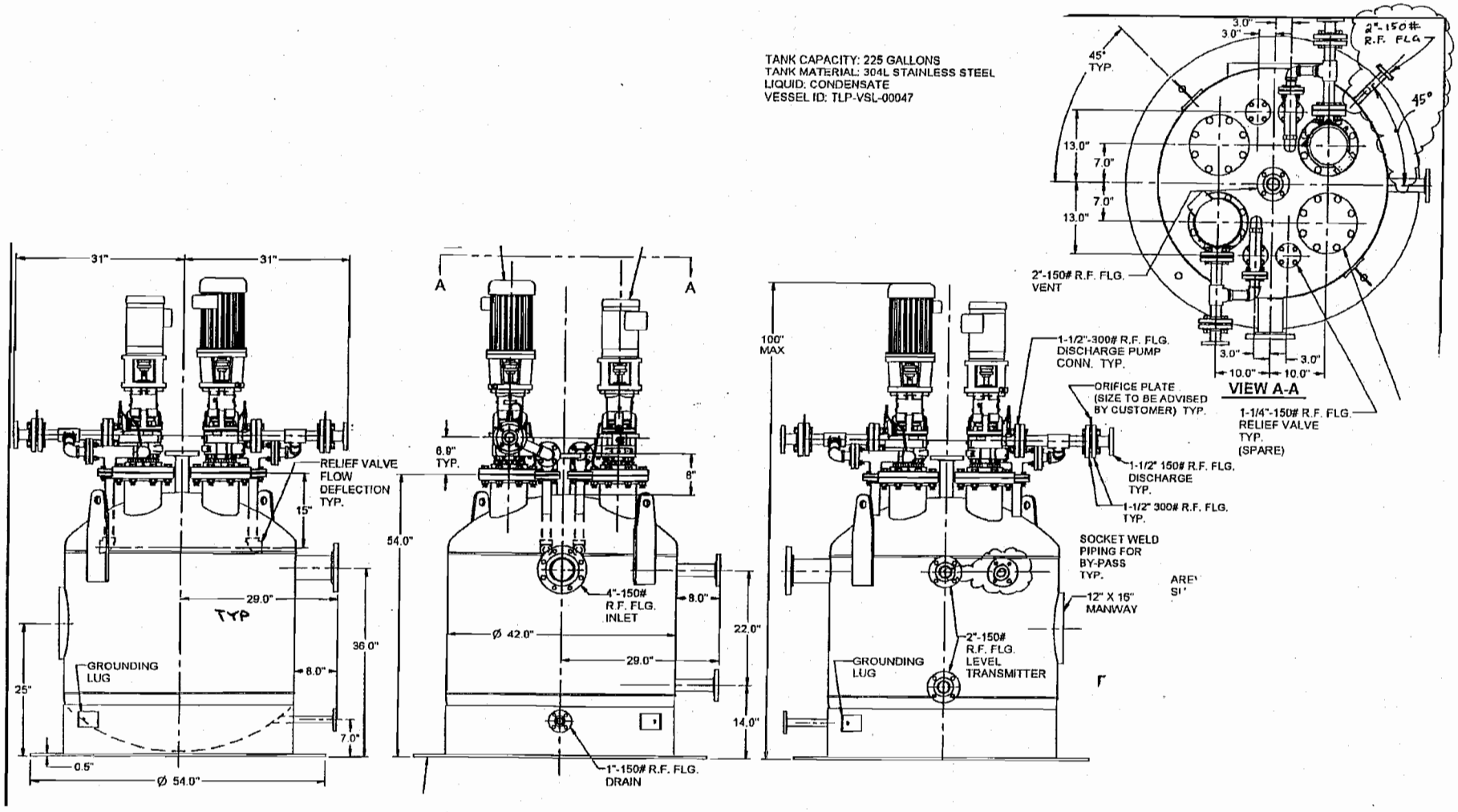

APPENDIX M

DELETED

APPENDIX N

DELETED

APPENDIX O

Nondestructive Examination (NDE) of Fabricated Pipe Welds

Non-Destructive Examination (NDE) of Fabricated Pipe Welds

ASME B31.3 Process Piping							
Type of Weld	Cat. D	Normal Fluid Service Less than Class 1500	Normal Fluid Service Class 1500 and Greater	Cat. M Black Cells	Cat. M Dual Containment Pipe		Cat. M All Others
					Inner Pipe	Jacket	
Girth and Miter Welds	100 % VT	100 % VT 5 % RT	100 % VT 100 % RT	100 % VT & RT (1)	100 % VT & RT (1)	100 % VT 5 % RT (3)	100 % VT 20 % PT/MT
Branch Connection Welds and Fillet Welds including Socket and Attachment Welds for Branch Reinforcement and Support Welds	100 % VT	100 % VT	100 % VT	100 % PT/MT (2)	100 % PT/MT (2)	100 % VT	100 % VT 20 % PT/MT

NOTES:

1. The radiographic acceptance criteria for normal fluid service applies except that incomplete penetration and undercut are not permitted.
2. The penetrant and magnetic particle test acceptance criteria shall be in accordance with B31.3 para. 344.4, except that no cracks are permitted.
3. A 5 % random in-process examination shall be performed in lieu of RT in accordance with ASME B31.3, Para. 341.4.1 & 344.7.
4. Black cells include Rm. No's. P-102, 104, 106, 108, 109, 111, 112, 113, 114 & 116 in the PT Building and Rm. No's. H-B005A, B032, B014, B021, B0005, B005A, B015, H-302 & H-308 in the HLW Building.

LEGEND:

RT – Radiographic Examination, PT/MT – Liquid Penetrant or Magnetic Particle Examination, VT – Visual Examination

APPENDIX P

Reboiler

Note: This appendix provides preliminary locations for reboiler large bore nozzles. Final nozzle locations are to be coordinated with the Buyer.

Sketch P-1 is deleted

Sketch P-2 is deleted

FEP/TLP Large Bore Reboiler Connector Loads are deleted

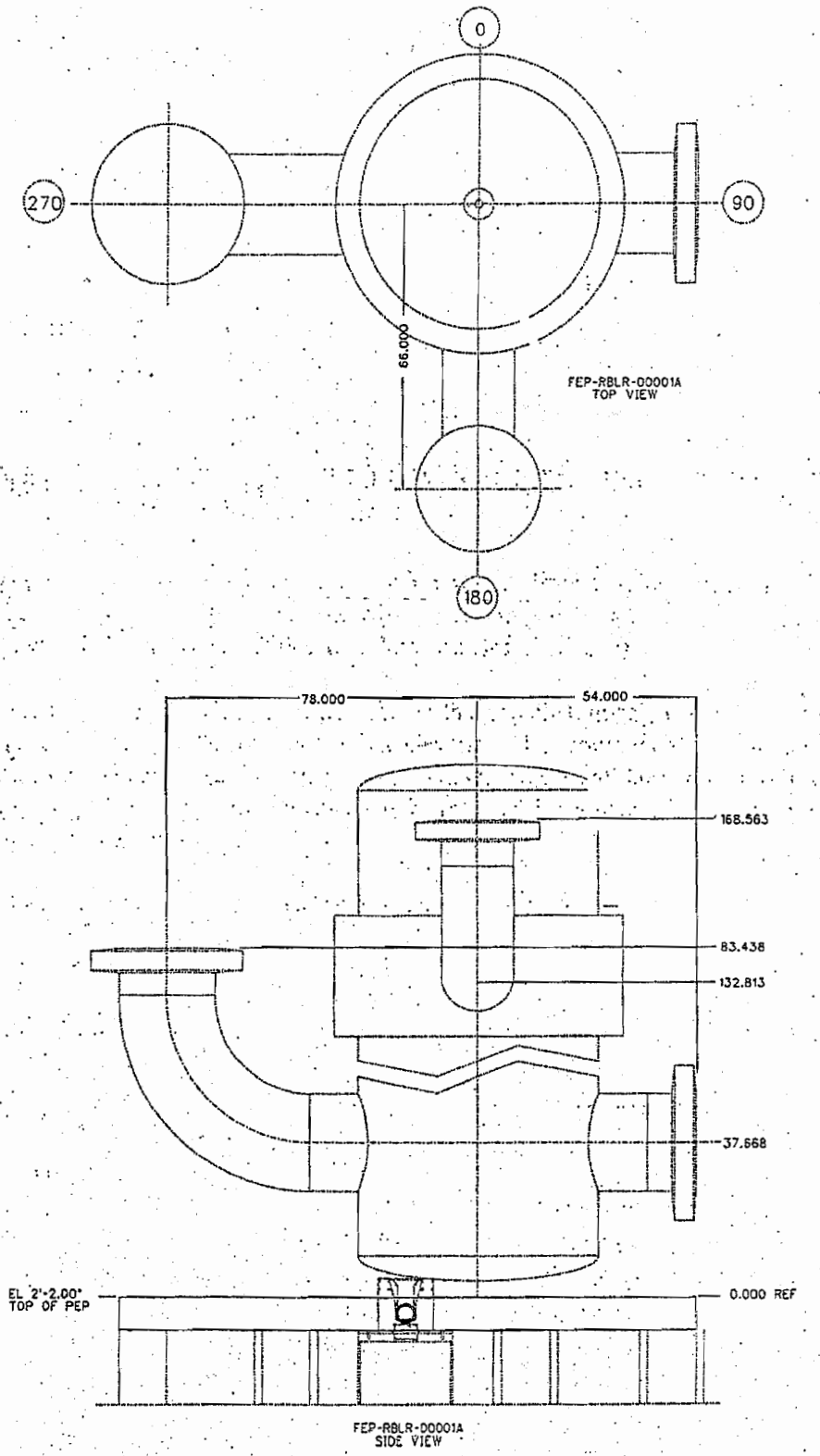

NOZZLE ORIENTATION, ELEVATION, AND DISTANCE FROM CENTERLINE
FEP-RBLR-00001A

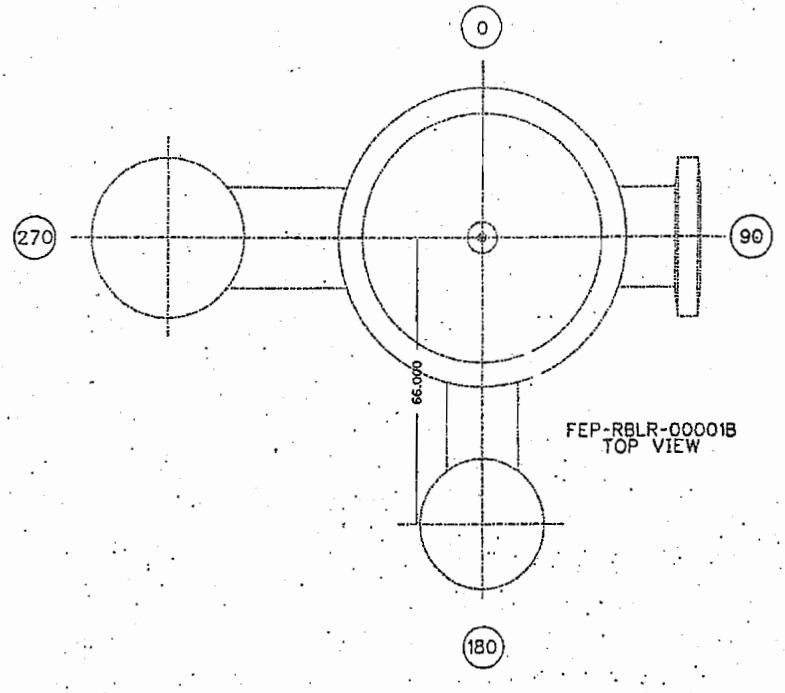

FEP-RBLR-00001B
TOP VIEW

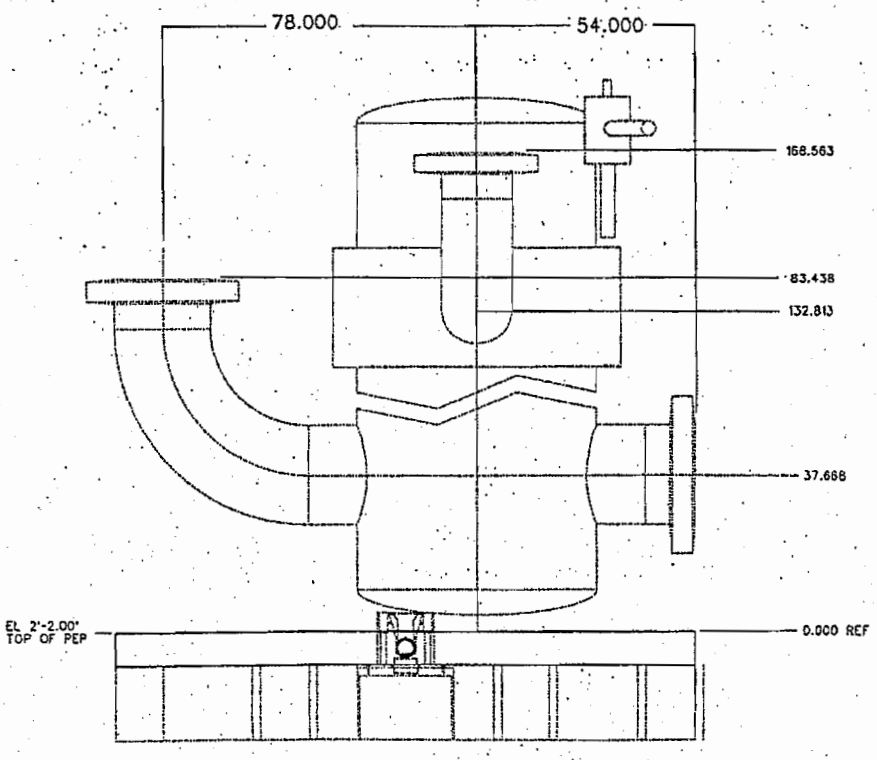

FEP-RBLR-00001B
SIDE VIEW

NOZZLE ORIENTATION, ELEVATION, AND DISTANCE FROM CENTERLINE
FEP-RBLR-00001B

APPENDIX P

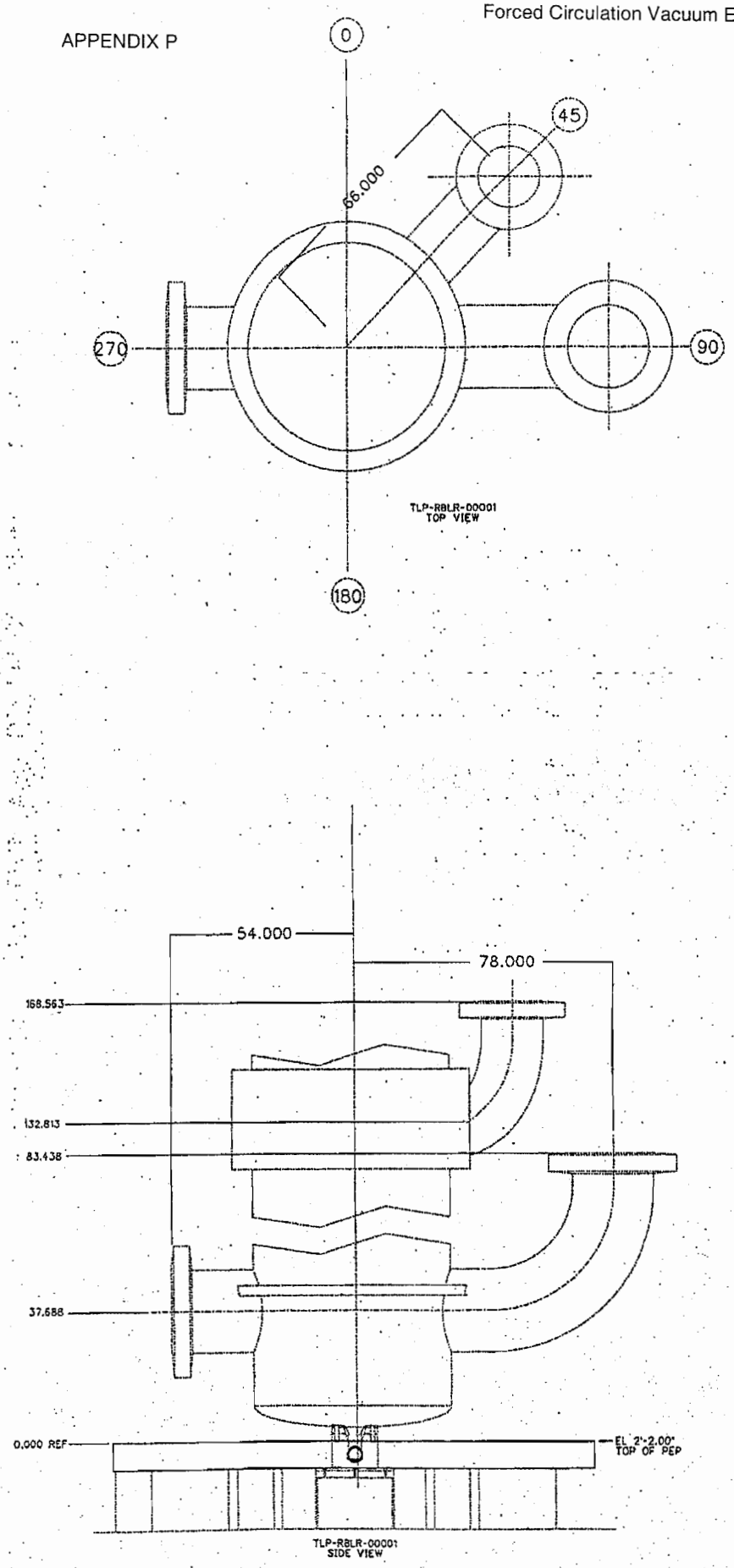

NOZZLE ORIENTATION, ELEVATION, AND DISTANCE FROM CENTERLINE
TLP-RBLR-00001

APPENDIX Q

Reboilers and Recirculation Pumps Layout

APPENDIX Q
SKETCH Q-1

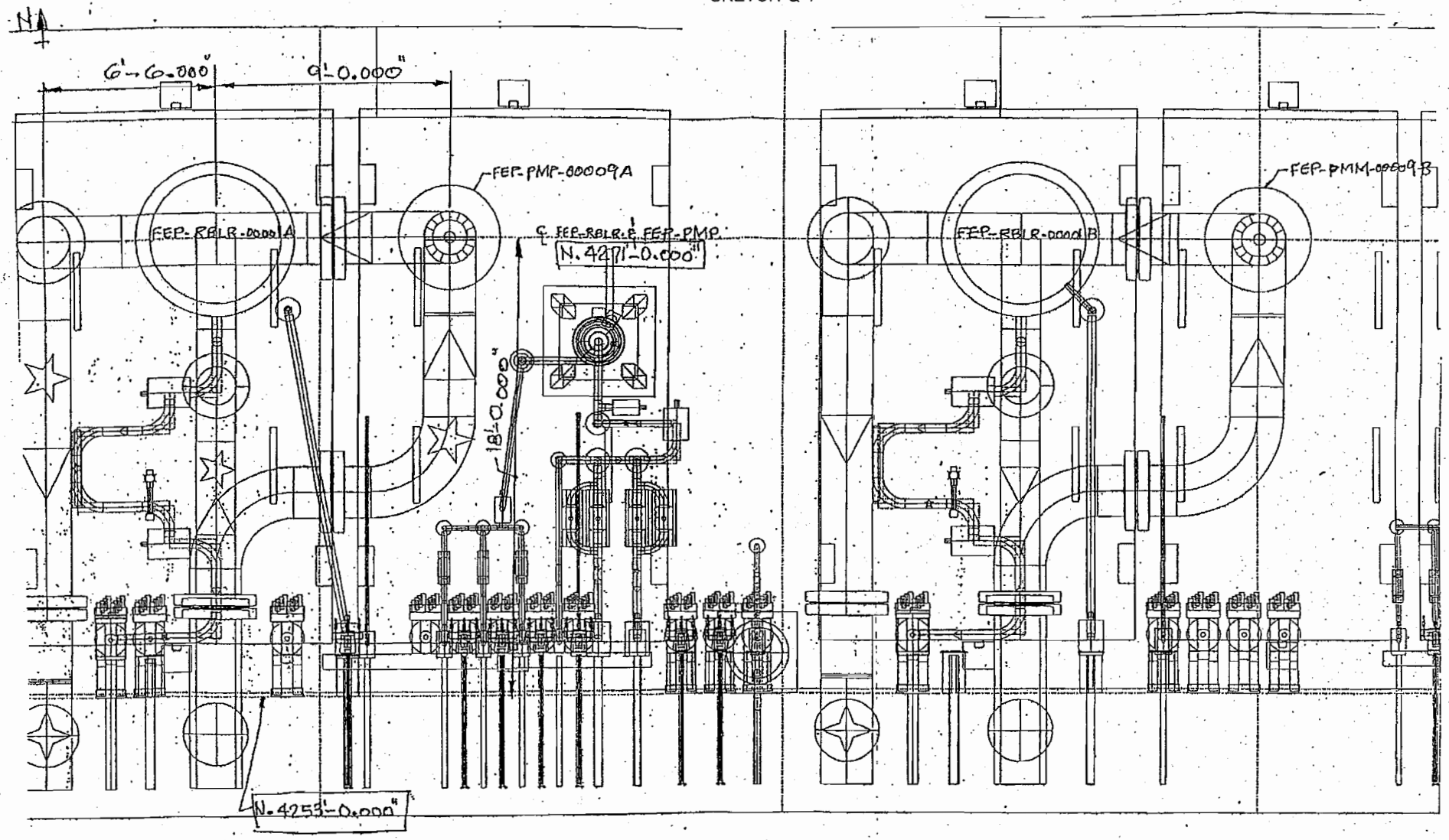

APPENDIX Q
Sketch Q-2

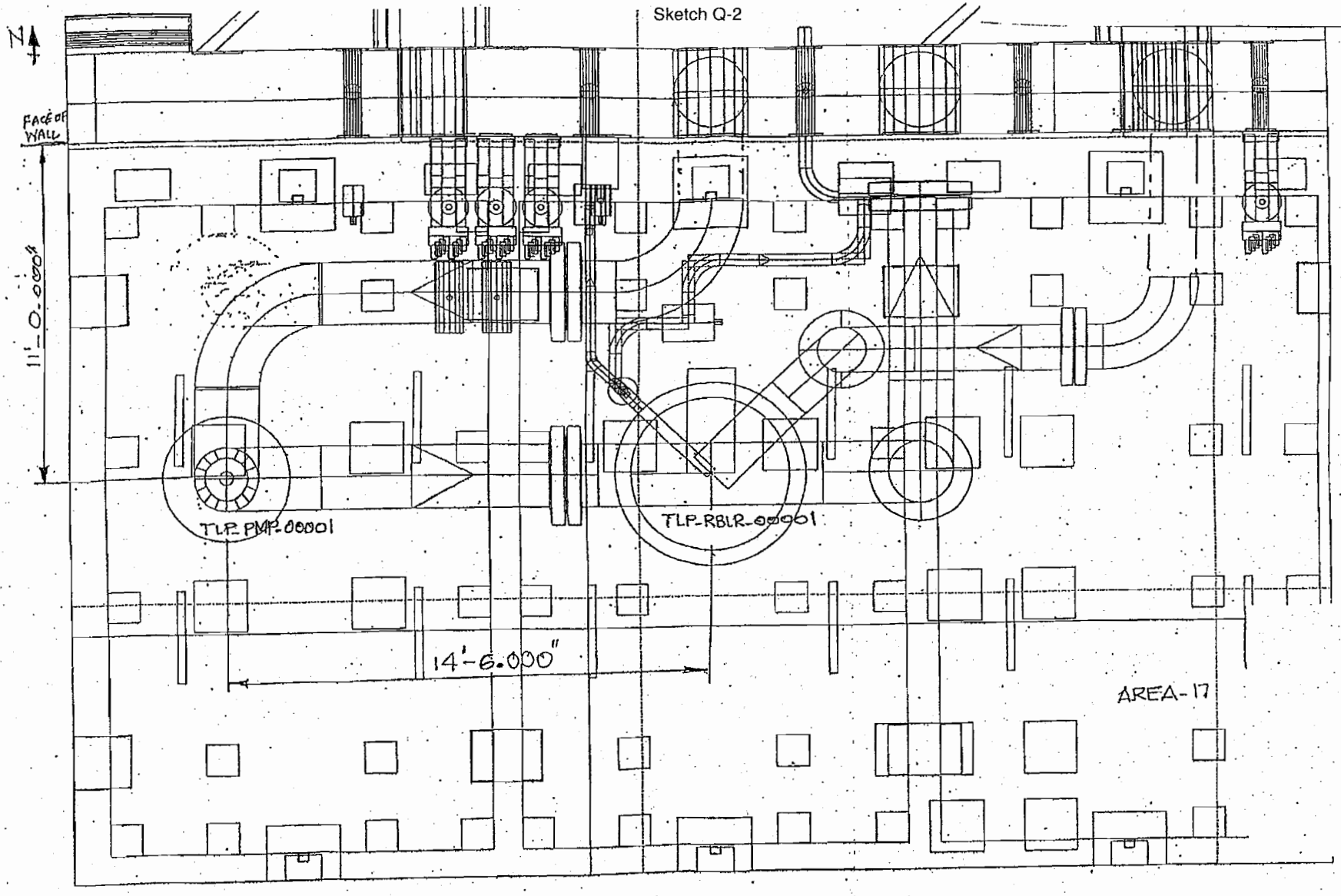

APPENDIX R

Deleted

APPENDIX S

Manufacturers Standard Coating Data Sheet

Manufacturers Standard Coating Data Sheet

The SELLER proposes the following Manufacturers Standard (Mfg. Std.) or alternate coating system that is suitable for the exposure conditions of steel items and equipment in radiation and non-radiation areas.

1. **Equipment Description:** _____
   A. Tag Number _____
   B. Part(s) i.e. skirt, shell, channels, lugs, etc.* _____
   C. Design/Operating Temperatures, designate °F or °C..... _____ °F _____ °C
   D. Does Equipment Receive Steam out (Yes/No), Temperature _____ °F _____ °C
   E. Insulated/Uninsulated _____
   F. Fireproofing (Yes/No) _____
   G. Carbon Steel (CS), Stainless Steel (SS), other (List) _____
2. **Seller:** _____
3. **Surface Preparation:** SSPC No./Profile _____ / _____
4. **Coating System Designation:** (Code)

	First Coat	Second Coat	Third Coat
A. Type of Coating.....			
B. Coating Mfg./No.**			
C. Dry Film Thickness (Min/Max in mils)/(μm) ...			
D. Wet/Film Thickness (Min/Max in mils)/(μm)			
E. Curing Method.....			
F. Color.....			
G. Dry to Recoat			
H. Pot Life.....			
I. Thinner / %			

5. **Total DFT of System:** (Mils/μm)(Min/Max)..... _____ / _____ Min. _____ /Max.
6. **Material Storage:** Temperature Requirements (Min/Max) _____ / _____
7. **Shelf Life:** ..... _____ Months
8. **Application Environmental Limits:**
   A. Temperature Ambient and Surface (Min/Max) ..... _____ / _____ _____ / _____
   B. Humidity (Min/Max)..... _____ / _____
   C. Dew Point ≥5°F above surface temp. (Yes/No)..... _____
9. **Protection of surfaces that will be inaccessible after equipment installation (such as underside of base plates, interior of fans, vessels or equipment housings)** _____
10. **Rust Preventative for machined faces:** (**Mfg./No.) _____
11. **Quantity of touch-up coating supplied:** _____
12. **Additional information:** (attach extra page as necessary) _____

* Use additional copies of this form for each part described in 1 above that requires a different coating system. A completed copy of this data sheet shall be submitted to CONTRACTOR/BUYER with the initial vendor data submittal.

** Include manufacturers technical data sheets and MSDS' for each proposed coating, preservative & solvent

APPENDIX T

Design Evolution Inputs

T.1A Recirculation Pump Remote Connector Design Inputs

*Design Input #**T.1A**-1:* The Hanford connector loads are 2000 lbs resultant force and 2900 ft-lbs resultant moment.

*Design Input #**T.1A**-2:* **Deleted**

*Design Input #**T.1A**-3:* **Deleted**

*Design Input #**T.1A**-4*: Remote impact wrench specification on studs
a) Loosen 750 ft-lbs
b) Tighten 400 ± 25 ft-lbs
c) Range 100 - 400 ft-lbs

*Design Input #**T.1A**-5*: Recirculation pump shall be designed to incorporate remote grease application to thrust bearing.

T.1B Recirculation Pump Barrier Cooling Fan Motor Remote Electrical Connector Design Inputs

***Design Input #T.1B-1*: Each Recirculation Pump/Motor assembly (FEP-PMP-00009A/B, TLP-PMP-00001) shall be provided with one (1) remotely accessible electrical connector for Buyer provided power to the barrier system cooling fan motor. The connector shall be designed for remote handling and shall consist of one (1) 90 degree stainless steel elbow plug with cable clamp suitable for a cable diameter of 0.75 inches, 4 - 600 Volt, 30 amp crimp type sockets, PEEK insulator and keyed; one (1) mating fixed mounted stainless steel receptacle, 4 – 600 Volt, 30 amp crimp type pins, PEEK insulator and keyed; one (1) stainless steel blanking plug.**

***Design Input #T.1B-2*: The connectors shall be:**

1. **LEMO model no. FHU.5N.304.TLCY17 (plug), EDU.5N.304.TLM (receptacle)**
2. **Or STAUBLI model no. RVX25.120X.5304 (plug) and RVX 25.625X.0304 (receptacle)**
3. **Or engineering approved equal.**

***Design Input #T.1B-3*: The fixed receptacle shall be mounted on panel, box or steel stainless steel plate (1/8" thick) mounted adjacent to the mounting plate for the lower Hanford connector. The receptacle shall be mounted so that the vertical service with the pin side of the receptacle facing outward. The Seller shall provide Harness "D" wiring between the receptacle and the barrier fluid cooling fan motor. The wiring shall be #10 AWG and shall be provided with radiation resistant insulation, rated for $2x10^8$ TID rad (gamma). The Seller shall provide and install the raceway between the receptacle and the fan motor terminal box. The blanking plug shall be inserted into the receptacle for shipping and storage. The connector plug shall be provided to the Buyer for later installation. Seller shall coordinate mounting location with Buyer to ensure power manipulator access.**

T.1C Electrical and Instrumentation Jumper Connector Data Sheet

BECHTEL	**Electrical and Instrumentation Jumper Connector Data Sheet** RIVER PROTECTION PROJECT – WASTE TREATMENT PLANT	Connector Data Sheet Number: Rev:

Connector Type	Type 1
Service:	☒ Power ☐ Instrumentation & Control
Specification:	

Line No.	General Design Criteria			
				Comments
1	Function:	480 Volt motor loads and other 120V loads		Used in Pretreatment Facility
2	Quality Level:	☐ Q ☒ CM		
3	Design Life:			
4	Safety Class:	NS		
5	Seismic Criteria:	SC-IV		
Line No.				
		Min	Max	
6	Ambient Temperature (°F):	95	113	
7	Relative Humidity (%):	0	100	
8	Radiation Resistance (TID Rads):	N/A	$2X10^8$	
9	Other:	Connectors with be occasionally exposed to a 1-5 molar nitric acid spray, CO2 or steam for decontamination purposes or accidental contact		Connector shall continue operating normally without degradation

Line No.	Equipment Data					
		L	W	H	Dia	Comments
10	Dimensions (inches):	4.0	4.0	5.5	TBD	Defines maximum envelope, not actual connector dimensions.
11	Weight (lbs):	TBD by Vendor				Each half of the contactor is not to exceed 4.5 lbs.
12	Configuration(s):	☒ 90 Degree Back Shell (Plug) ☒ Straight Back Shell (Plug) ☒ Panel Mounted (Receptacle)				Panel Mounted configuration to fit through a 3/16" thick plate (maximum)
13	Accessories:	☒ Cable Clamp ☒ Blank Plug				A swivel fitting will be used for flexible metal conduit Blank Plug adapter for Panel Mounted configuration only. A single plug shall be able to fit over any keyed variation.
14	Protection rating:	☒ IP66* ☐ Other				*IP66 rating is required only when connected to mate or blank plug is attached

Line No.	Materials		
			Comments
15	Outer Shell Material:	300 Series Stainless Steel	304L or 316L
16	Insert Material:	PEEK	
17	Contact Material:	Gold plated Copper	
18	Internals:	300 Series Stainless Steel or approved equal	
19	Seals (o-rings):	Environment compatible	
Line No.	**Electrical Requirements**		
			Comments
20	Ampacity (amps):	30	
21	Voltage Rating (volts):	600	
22	Number of Contacts:	4	
23	Conductor Size (AWG):	#10 to # 8	Single or Multi Conductor
24	Cable Covering:	☐ Flexible Metal Conduit ☐ Armored ☐ Cable Insulation Only	Harness "D" by Vendor
25	Cable Covering Diameter (inches):	0.75	
Line No.	**Maintenance Requirements**		
			Comments
26	Remote Handling Tool	☒ PaR 6000 or PaR 4350* ☒ Master Slave Manipulator (MSM)** ☐ none	*PaR 4350 will have a Par 3000 wrist and hand. PaR 6000 may be substituted with PaR 4350 with a PaR 6000 wrist and hand ** MSM will have the same capabilities as Central Research Laboratories MSM mode RE
27	Push-through	☐ Yes ☒ N/A	Push through plug design, when elected, shall allow connector, cable clamp and additional accessories to pass through a 3" conduit with bends of 5 times the OD of the conduit

	Special Instructions: (See description below)
1	Connector shall be installed per the manufacturer's instructions.
2	Inspect all crimped connections for compliance with manufacturer's instructions and procedures for proper conductor termination.
3	Power wiring shall be tested and meet the requirements of NEC 110-7 as follows. After termination to the connector, by using megohmmeter tester, measure and record insulation resistance at 1000 volts. No short circuits (between contacts and connector housing) are to be present and insulation resistance shall be greater than 10 M ohms.

	Sketch

See SKETCH , Fabrication Assembly Details, Harness "D"

T.1D Sketch, Fabrication Assembly Details, Harness "D"

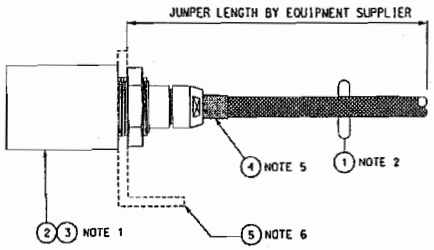

SUB-JUMPER
CABLE ASSEMBLY

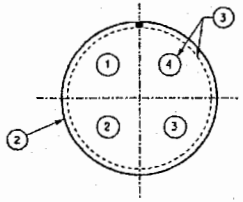

INSULATOR & CONTACTS
(VIEW OF CABLE TERMINATION SIDE)

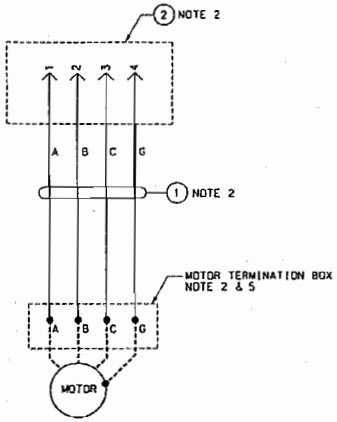

WIRING DIAGRAM

NOTES:

1. FABRICATE AND TEST HARNESS PER CONNECTOR DATA SHEET.
2. THE HARNESS ASSEMBLY SHALL BE TERMINATED PER THIS DRAWING. CABLES TERMINATION TO MOTOR LEADS SHALL UTILIZE COMPRESSION TYPE CONNECTORS.
3. THE HARNESS ASSEMBLY CONSISTS OF CONTACTS, RETENTION HARDWARE, CABLES, INSULATING PLATES, AND MARKERS AND SHALL BE ASSEMBLED PER THE CONNECTOR MANUFACTURER'S INSTRUCTIONS.
4. IDENTIFY EACH CONDUCTOR WITH PERMANENTLY ATTACHED LABEL AT EACH END OF THE CABLE, THIS LABEL SHALL DESIGNATE THE CONTACT NUMBER (1, 2, 3, ...) OF THE INSULATOR. IDENTIFY EACH CABLE WITH PERMANENTLY ATTACHED LABEL, AS NOTED ON WIRING DIAGRAM.
5. HEAT SHRINK (ITEM 4) HARNESS "D" AT MOTOR TERMINALS. IF SINGLE CONDUCTORS, HEAT SHRINK AT CONNECTOR CABLE GLAND/CLAMP. THE CABLE GLAND/CLAMP SHOULD BE CLAMPING HEAT SHRINK CABLE BUNDLE. IF MULTI-CORE CABLE, HEAT SHINK IS NOT REQUIRED AT CABLE GLAND/CLAMP.
6. MOUNTING BRACKET SHALL BE STAINLESS STEEL, FIXED TO THE LOAD, AND SUFFICIENTLY RIGID TO ALLOW REMOTE LATCHING AND UNLATCHING OF THE MATING CONNECTOR WITHOUT DAMAGE TO THE BRACKET OR CONNECTOR.

ITEM NO.	QTY	UNIT	DESCRIPTION
1	1	EA	600 VOLT CABLE, 3/C #10 AWG, W/#10 AWG GND OR 3-1/C #10 AWG, W/#10 AWG GND
2	1	EA	CONNECTOR, TYPE 1 WITH PANEL MOUNT SHELL
3	1	EA	INSULATOR & CONTACT ASSEMBLY, 4 CONTACT, MALE PINS
4	AR	-	HEAT SHRINK, RAYCHEM TYPE WCSF-N
5	1	EA	CONNECTOR MOUNTING BRACKET BY VENDOR

CM
QUALITY DESIGNATOR

REFERENCE DRAWINGS / PROCEDURES / SPECIFICATIONS

NUMBER	TITLE

ISSUE STAMP

CONTRACT No: DE-AC27-01RV14136
CONTENT APPLICABLE TO ALARA? [X] YES [ ] NO
ADR NO. 24590-WTP-ADR-PL-02-006 REV: 0
SAFETY SCREEN REQUIRED? [ ] YES [X] NO E&NS INITIAL IF YES ____

REV	DESCRIPTION	ORG	CHKD	RVWD	APVD	DATE

PROJECT No.	24590
SITE:	HANFORD
AREA:	200E
BUILDING No.	10
SCALE:	NTS

BECHTEL

RIVER PROTECTION PROJECT
WASTE TREATMENT PLANT
2435 STEVENS CENTER PLACE
RICHLAND, WA 99354

FABRICATION ASSEMBLY DETAILS
HARNESS "D"

REV.

C:\Data\WTP\PTFE9E52T10043.dgn

PLOTTED BY: tcraig

T.2 Reboiler Grayloc Backing Plate

Design Input: It is acceptable design that the Grayloc backing plates for the 24" diameter process inlet of the reboilers FEP-RBLR-00001A/1B and TLP-RBLR-00001 can be installed after reboiler has after reboiler has been transported through airlock (inside hotcell). Furthermore, the Grayloc backing plate for the 18" diameter steam inlet of the reboiler TLP-RBLR-00001 can also be installed after the TLP reboiler has been through airlock.

T.3 Floor loading

Design Input: The uniform load is defined as floor loading transmitted by the skid to the floor without spreading of the load out through the supporting concrete slab. The floor loadings listed in the table below has been determined to be acceptable.

Allowable Uniform Floor Loading Directly Under Skid Footprint

Equipment	Location	Weight (Operating + Skid) (lbs)	Skid Foot Print Floor Area (ft^2)	Uniform Load (Operating) (lbs/ft^2)
FEP-SEP-00001A	J : 8-9 (0'-0")	134,500	400	**336**
FEP-SEP-00001B	J : 10-11 (0'-0")	134,500	400	**336**
TLP-SEP-00001	D : 18 (0'-0")	134,500	400	**336**
FEP Condenser Skid A	K-L : 8 (56'-0")	70,000	179	**391**
FEP Condenser Skid B	K-L : 10-11 (56'-0")	70,000	179	**391**
TLP Condenser Skid	D-E : 19-20 (56'-0")	70,000	179	**391**
FEP-VSL-00005	M : 7-8 (0'-0")	45,100	66	**683**
TLP-VSL-00002	B : 24-25 (0'-0")	24,000/4	1	**6000**
AFR-TK-00001	G-H : 9-10 (77'-0")	24,000	40	**600**
AFR Pump Skid	G-H : 9-10 (77'-0")	415	12	**35**

Note: Uniform load (lbs/ft^2) = Total Equipment Weight (lbs) / Foot Print Area (ft^2)

T.4 Surface Finish for Equipment in the Hot Cell

Design Input #1: A surface finish of 125 micro-inches is required for non-rotating parts such as reboiler, support stands, recirculation pump, recirculation piping, and lifting yokes. The surface finish of 125 micro inches shall be applied to machined surfaces not all surfaces

Design Input #2: A surface finish of 63 micro-inches is required for rotating parts such as pump shaft and impeller.

T.5 Manipulator Capability for Separator Vessel Head Crane

Design Input: There will be no manipulator capability for the crane on the 56-ft elevation for separator vessel head removal. The current plan is to install a monorail and hoist when there is a need to replace separator demister pads.

T.6 Axial Flow Pump ASDs

Design Input: The ASDs for FEP-PMP-00009A/9B will be installed in the MCC room P-417 on the 77'-0" elevation and the ASD for TLP-PMP-00009 will be installed in the MCC room P-0315 on the 56'-0" elevation. These MCC rooms are designed as R2/C2 as shown on the drawings 24590-PTF-P01T-00003 and 24590-PTF-P01T-00004. The temperature range for these MCC rooms is between 59-113 °F and the humidity range of 5 - 85 %.

T.7 Instrumentation

Design Input #1 - Final Instrument Location Drawings:

Seller is no longer required to provide instrument location and mounting information on the datasheet. Instrument location and mounting information will be completed by Buyer as required on the data sheets.

Design Input #2 - BNI Instrument Details:

Seller is no longer required to provide loop drawings that include schematic and wiring information. BNI will use Set Route and Intools for wiring information. For the 60% design stage, Seller is not required to provide environmental criteria, manufacturer or manufacturer's model number since they will be addressed at the 90% design milestone. Seller shall provide the following I&C information at 60% design:

1) An Instrument Index that includes the type of instrument, service description, calibration range, tag number, signal type, P&ID number and data sheet number.

2) Data Sheets as supplied with the contract package completed with as much information as is available, including tag numbers, calibration range, instrument range and specific process parameters, etc.

3) Logic diagrams which complement the system description.

T.8 Off-gas piping Condenser Intra-Skid Piping

Design Input: No insulation is required for off-gas piping and condenser intra-skid piping. These pipes are in restrictive rooms where no personnel enter during evaporator system operations.

T.9 Separator Vessels

Design Input #1: Separator Vessel Lower Frame:

No internal components are allowed except the use of Nelson studs on the lower ten inches of the inside surface. Seller shall provide minimum amount of grouting requirements to provide adequate stiffness for the lower frame of solid ring of 18-inches high and 19-feet square

Design Input #2: External Ring for Spray Nozzles:

Seller shall design and provide external rings for both the upper and lower demister pad spray nozzles. These external rings shall be connected together to provide an accessible connection at approximately 48'-0" plant elevation.

T.10 FEP Condensate vessel

Design Input: Seller shall provide a separate FEP condensate vessel support ring plate to interface properly with floor embeds. The ring plate will be field welded to embedded plates on both sides. Vessel skirt will be filed welded to ring plate at exterior face only with partial penetration and fillet welds.

T.11 Equivalent Lengths for Centrifugal Pumps

The piping equivalent length is provided on the table below for pump sizing calculation. Please be advised that the bounding values have incorporated the line size changes. However, the flow resistance due to flow restriction orifice, backpressure control valve, discharge spray nozzle has not incorporated into the bounding values because they are to be sized by Seller. Seller shall include these flow resistance in their pump sizing calculation.

For discharge lines from pumps TLP-PMP-00002A/B to separator vessel (TLP-SEP-00001) and from pumps FEP-PMP-00006A/B, FANP shall also add a flow resistance of 5 psi due to Millipore filter in the calculation. For discharge line from TLP-PMP-00005A/B to sampler, Seller shall also include sample delivery pressure of 5 psig.

	Description	From	To	Straight Runs	Elevation Change	Elbows (LR 90)	Eq. Length	Tees	Eq. Length	Valves	Eq. Length	Exits	Eq. Length	Entrances	Eq. Length	Other	Totals (ft) (EQ.L.)	Totals (ft) (ΔEL.)	Bounding Values (ft) (EQ.L.)	Bounding Values (ft) (ΔEL.)	Notes
TLP-PMP-00002A/B	Suction	TLP-VSL-00002	*Pump*	30	2	*5*	33	*1*	20	*4*	20	*0*	0	*1*	9	0	112	2	150	2	
	Discharge	*Pump*	TLP-VSL-00002	40	15	*5*	25	*2*	30	*4*	15	*1*	13	*0*	0	50	173	15	250	20	*1*
			RLD-TK-00006A/B	250	60	*25*	125	*4*	60	*8*	30	*1*	13	*0*	0	50	528	60	625	65	*2*
			TLP-VSL-00009A/B	250	60	*25*	125	*4*	60	*8*	30	*1*	13	*0*	0	50	528	60	625	65	*2*
			TLP-SEP-00001	250	60	*25*	125	*3*	45	*10*	38	*0*	0	*0*	0	50	508	60	600	65	*3, 4*
TLP-PMP-00011A/B	Suction	TLP-SEP-00001	*Pump*	100	5	*5*	25	*1*	15	*3*	11	*0*	0	*1*	7	0	158	5	250	5	
	Discharge	*Pump*	TCP-VSL-00002	300	60	*15*	50	*1*	10	*3*	8	*1*	9	*0*	0	0	376	60	450	65	
TLP-PMP-00005A/B	Suction	TLP-VSL-00009A/B	*Pump*	80	4	*8*	40	*2*	30	*5*	13	*0*	0	*1*	7	0	169	4	200	4	
	Discharge	*Pump*	TLP-SEP-00001	125	15	*15*	38	*3*	22.5	*2*	4	*1*	7	*0*	0	0	195	10	250	15	
			SAMPLER	180	70	*15*	50	*2*	20	*3*	8	*0*	0	*0*	0	0	258	70	300	70	*5*
FEP-PMP-00006A/B	Suction	FEP-VSL-00005	*Pump*	15	2	*5*	33	*1*	20	*3*	15	*0*	0	*1*	9	0	92	2	125	2	
	Discharge	*Pump*	FEP-VSL-00005	25	20	*7*	35	*2*	30	*5*	19	*1*	13	*0*	0	50	172	20	250	25	*1*
			RLD-TK-00006A/B	1100	60	*50*	250	*6*	90	*8*	30	*1*	13	*0*	0	50	1533	60	1750	65	*2*
			FEP-VSL-00017A/B	550	60	*35*	175	*4*	60	*6*	23	*1*	13	*0*	0	50	871	60	1000	65	*2*
			FEP-SEP-00001A/B	600	60	*35*	175	*3*	45	*10*	38	0	0	*0*	0	50	908	60	1100	65	*3, 4*

Notes: Framatome Needs to also consider flow resistances due to...
1. Flow Restriction Orifice (sized by FANP)
2. Back Pressure Control valve (sized by FANP)
3. Milli-pore filter (max dP = 5 psi)
4. Disharge spray nozzle pressure (specified by FANP)
5. Sample Delivery pressure of 5 psig.

T.12 Equivalent Lengths for Roth Transfer Station Pump

The equivalent length is provided in the table below:

Description	From	To	Bounding values (ft)	
			EQ. L	ΔEL
Discharge	FEP A SKID 9A Pump	SCW Storage Tank	2200	60
Discharge	FEP A SKID 9A Pump	Steam Cond. Skid 6A	600	80
Discharge	FEP B SKID 9B Pump	SCW Storage Tank	2000	60
Discharge	FEP B SKID 9A Pump	Steam Cond. Skid 6B	700	80
Discharge	TLP SKID Pump	SCW Storage Tank	720	60
Discharge	FEP B SKID 9A Pump	Steam Cond. Skid 8	1130	100

T.13 Standard Kick-Off Plate

Design Input: Buyer will provide Seller 2" and 4" PUREX nozzle with square standard kick-off plate per drawing 24590-WTP-M61-P23T-00040 for FEP/TLP reboilers.

T.14 Steam Conditioning Components

Design input #1: Absorption desuperheaters are classified as pressure vessels. Seller shall design, analyze, and fabricate these desuperheater vessels to meet all applicable WTP specification requirements for CM and SC-III vessels provided in the current PO. Fabrication specification for these absorption desuperheater vessels is 24590-WTP-3PS-MV00-T0001. Design Code is ASME Section VIII Division 1 with Code Stamp and NB Registration. Seismic design shall be per 24590-WTP-3PS-MV00-T0002 and 24590-WTP-3PS-FB01-T0001.

Design input #2: Vessel Design: Design pressures shall be 50 psig maximum and full vacuum minimum based on the downstream piping of the safety valves (see layout sketch provided in page T-13 of this appendix). Design temperatures shall be 335 deg F maximum and 49 deg F minimum. 335 deg F max temperature is derived from enthalpy balance and 49 deg F is the minimum design metal temperature . All welds shall be continuous to avoid crevices. Welds are to be descaled as laid.

Design input #3: Desuperheater vessels are CM and SC-III. 0.040 inch shall be used for corrosion allowance. Due to high vessel nozzle load allowable for SC-III vessels, the 18"-inlet/outlet nozzles of these desuperheater vessels can be designed per Table A-1, "Minimum Nozzle Loads Due to Stainless Steam Piping on Vessels Designed as SC-I" for 18-inch pipe size of Pressure Vessel Design and Fabrication Spec 24590-WTP-3PS-MV00-T0001. The 1.4 multiplying factor does not apply for the 18"-inlet/outlet SC-I nozzle loads. Thermal reduction factor found in 24590-WTP-3PS-MV00-T0001, Section 3.7.4 can be applied.

Design input #4: The 28'-elevation floor and 56'-elevation floor has been poured. Post Installed Concrete Anchors for these desuperheater vessels to floors shall be designed per attached WTP spec 24590-WTP-3PS-FA02-T0003. The reactions shall be provided in the calculation at each floor anchor. Seller shall provide preliminary locations of these floor anchors for Buyer review and concurrence prior to incorporation into the design.

For desuperheater vessels, the design of the anchorage is in the scope of the Seller's responsibility. The quality level of the anchorage for the desuperheater vessels is Non-Q (non-ITS). Accordingly, specifications 24590-WTP-3PS-FA02-T0003 and 24590-WTP-3PS-FA02-T0004 shall apply except as described below.

If Seller chooses to use a higher safety class design (Q), specification 24590-WTP-3PS-FA02-T0005 (in lieu of 24590-WTP-3PS-FA02-T0003) and 24590-WTP-3PS-FA02-T0004 shall apply. In this case, the optional use of a higher safety class design (Q) shall be clearly indicated in the applicable Seller's documents (such as drawings, calculations, and installation manual, etc.)

Design input #5: Seller shall review the layout sketches (provided in section T.13 of this appendix) for FEP & TLP steam conditioning components to make sure there is no impact on AREVA process requirements. Please note that TLP absorption desuperheater has been relocated to 28'-elevation floor due to space constraints.

Design input #6: Seller shall confirm cooling water process requirement is adequate for desuperheater vessels which may need more water than required when compared to an enthalpy calculation due to conversion efficiency of cooling the steam close to saturation.

Design input #7: Seller shall confirm that the existing design of Roth pumps can support proposed required cooling water process requirements (i.e pressure, temperature, flowrate).

Design input #8: The Desuperheater vessels shall be made of SA240 316SS. All nozzles shall be SA312 316SS, based on ASME, CL 150. Steam inlet and outlet connections shall be 150# ANSI RF weld neck 18". Water inlet and drain connections shall be 1.5" 316SS, 150# ANSI RF weld neck flanges. Internal baskets shall be 316SS construction with 304SS Reaction Rings. The desuperheater support frames shall be made of 304 stainless steel tubing and 304 stainless steel baseplate material. Gaskets shall be Grafoil spiral wound 316SS.

Design input #9: For Q/SC-I control valves, the analysis shall apply 4.54g acceleration to the valve at its center of gravity in each of the 3 orthogonal directions to bound Section 3.1 of Piping Stress Design Criteria, 24590-WTP-DC-PS-01-001. In addition, these Q/SC-I control valves shall have the CL600 rating with an analysis to show that the actuators have a frequency greater than 33Hz. Please note that the valve function is pressure containment only. Valve operating during and after seismic event is defined as maintenance of pressure containment. Buyer will provide mating CL600 rating for Buyer's piping connection.

FEP-1A

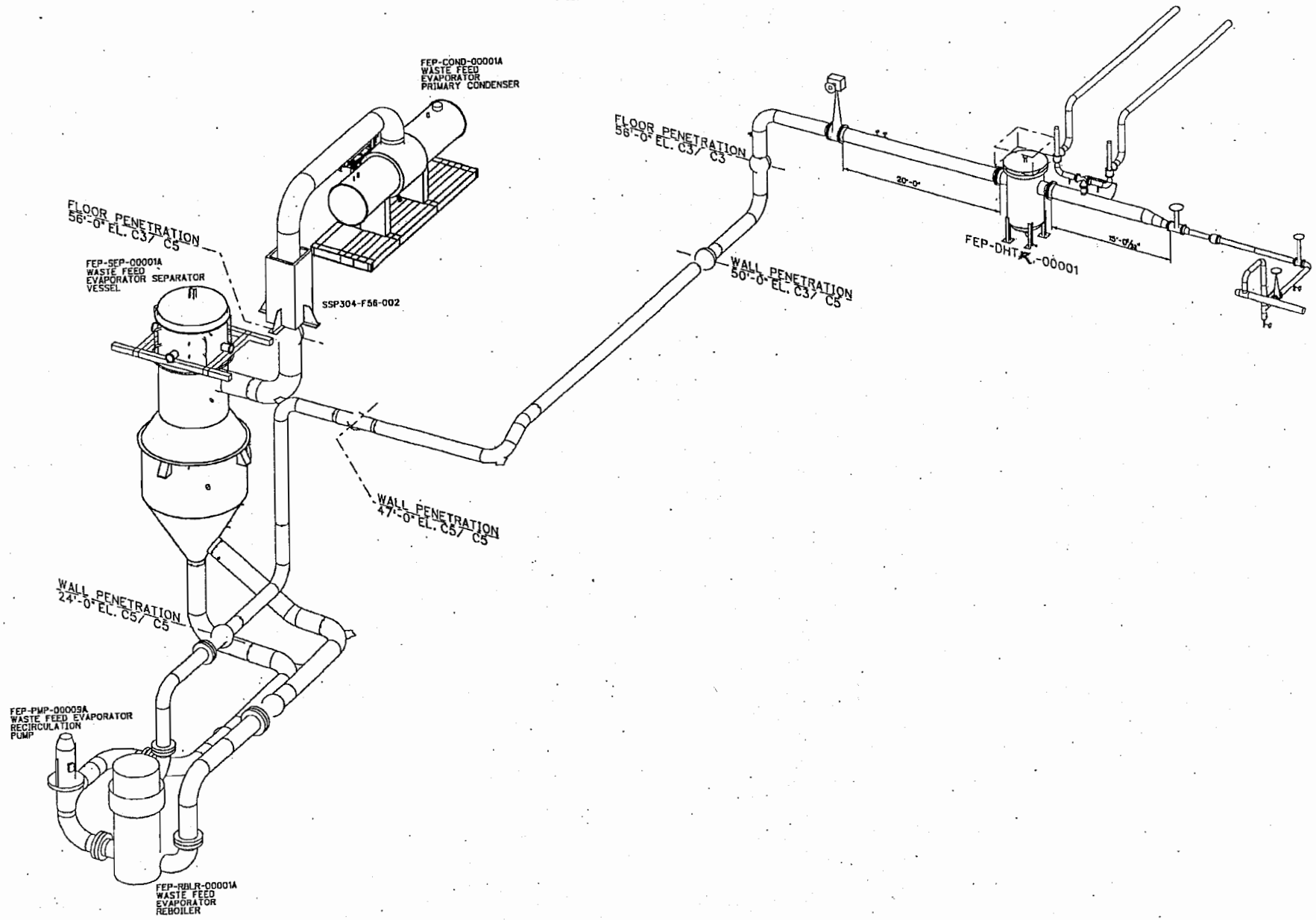

24590-PTF-3PS-MEW-T0001 Rev. 3

Pg T-13

PTF
56'-0" elevation
Plan View

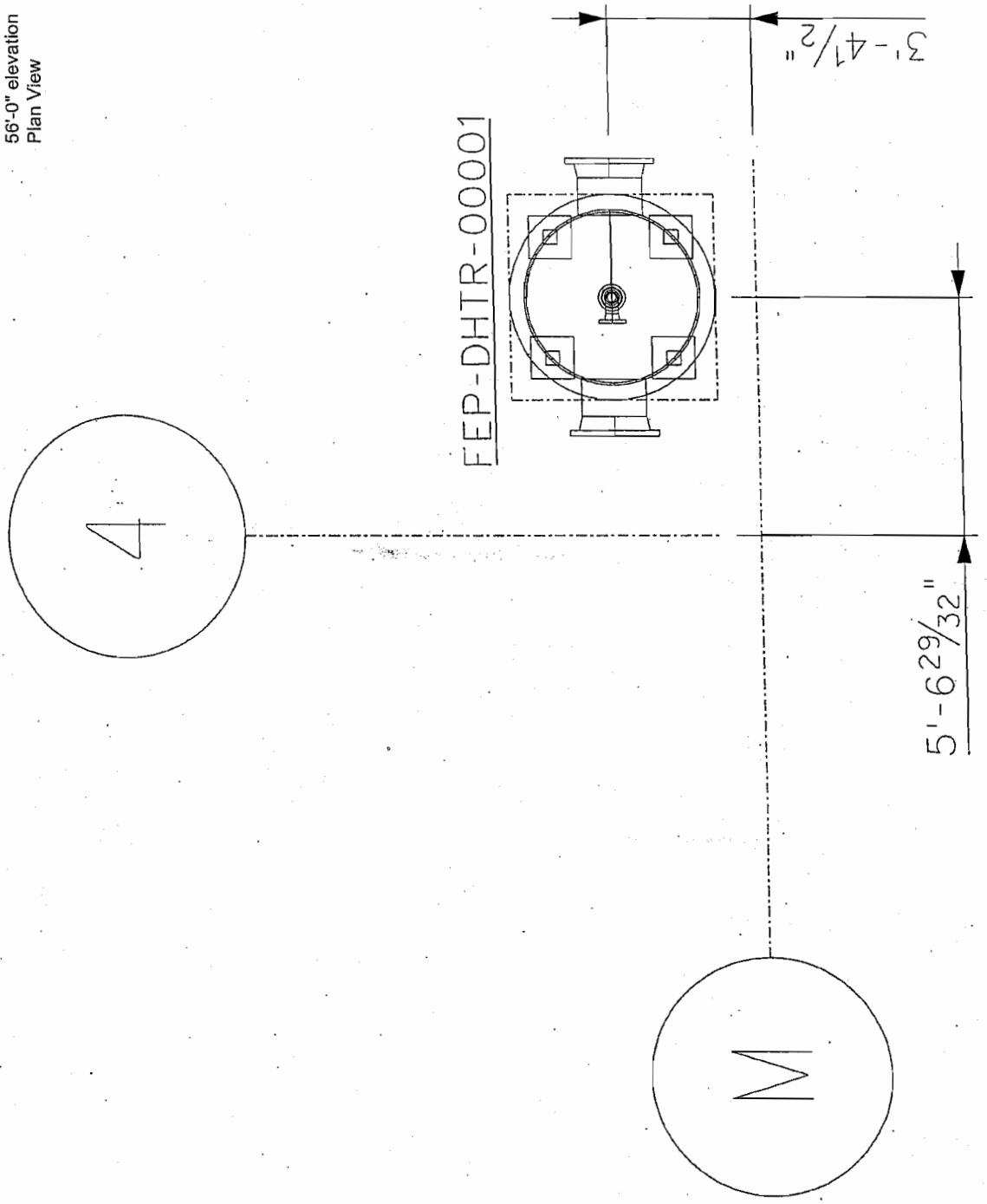

24590-PTF-3PS-MEVV-T0001 Rev.5

Pg T-15

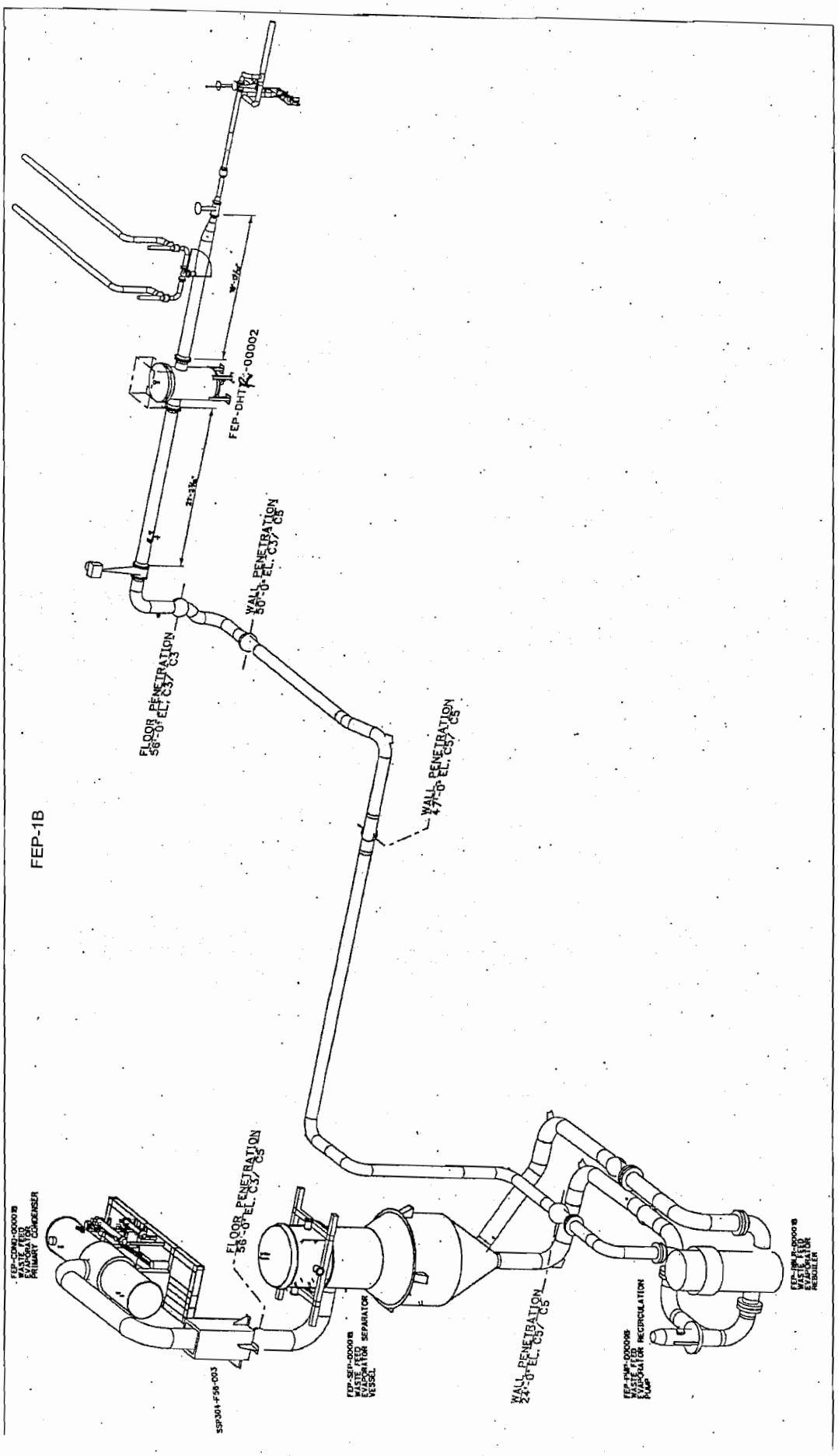

24590-PTF-3PS-MEVV-T0001 Rev. 3
Pg T-16

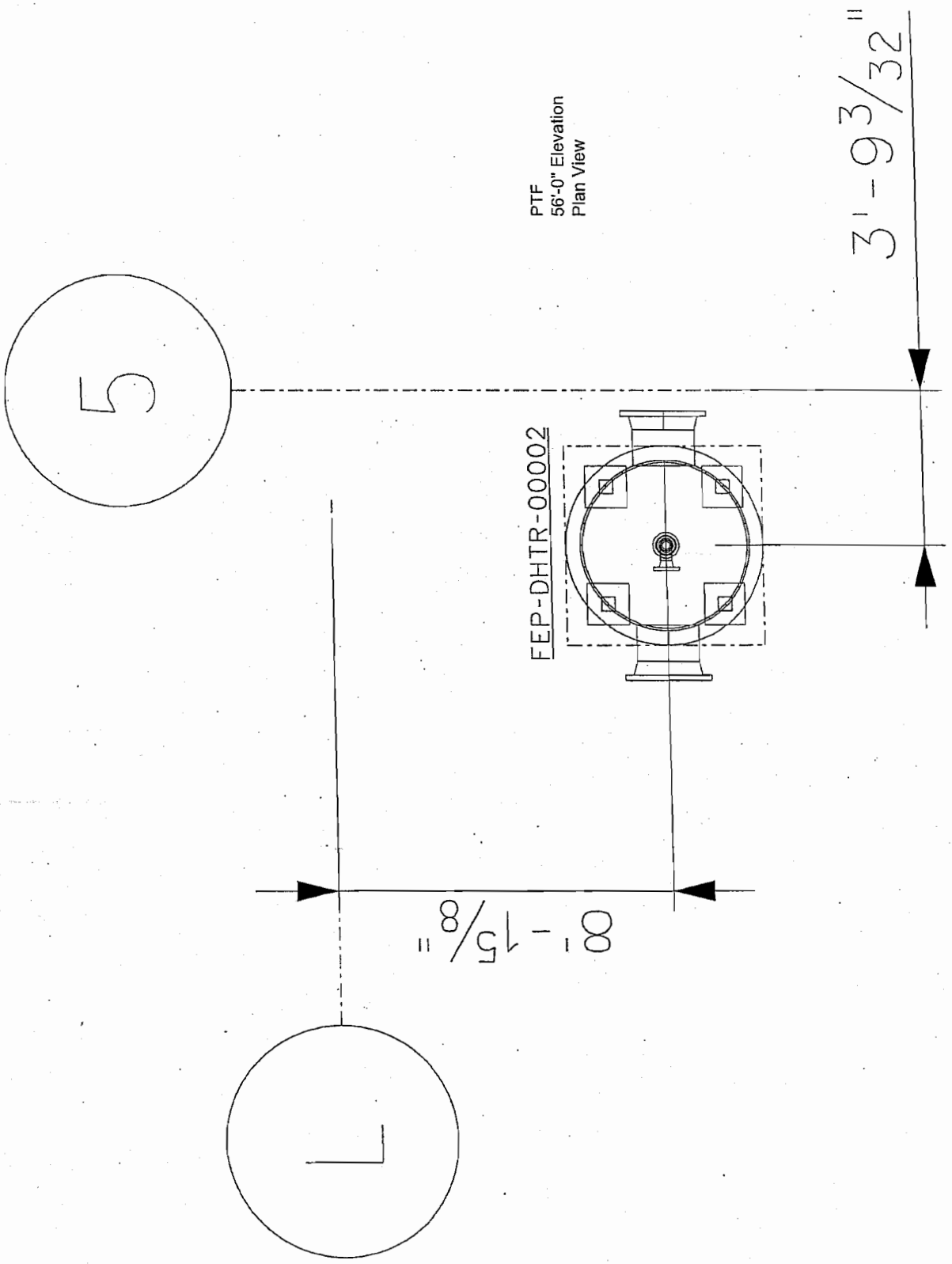

24590-PTF-3PS-MEVV-T0001
Rev. 3
Pg T-17

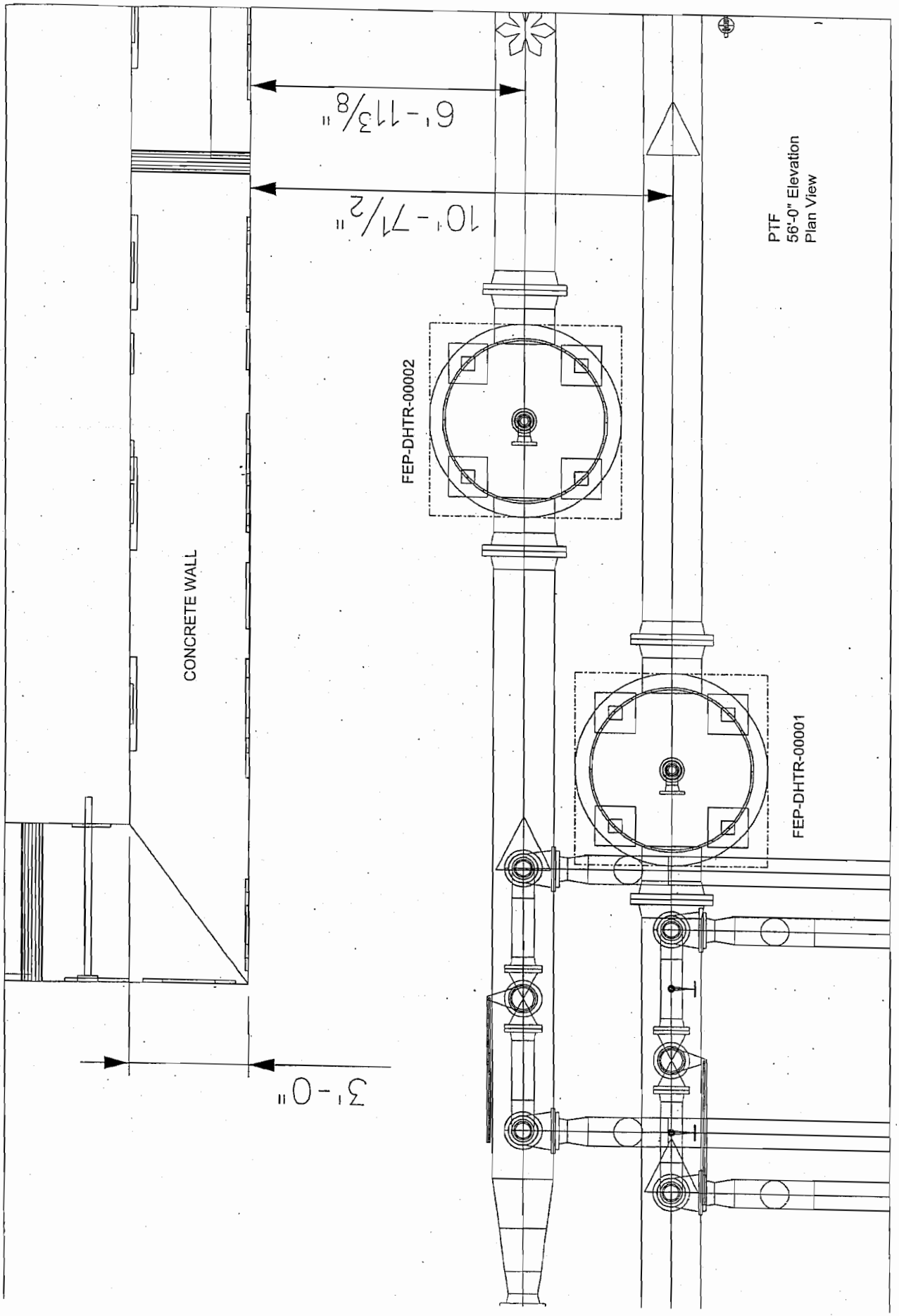

TLP Evaporator

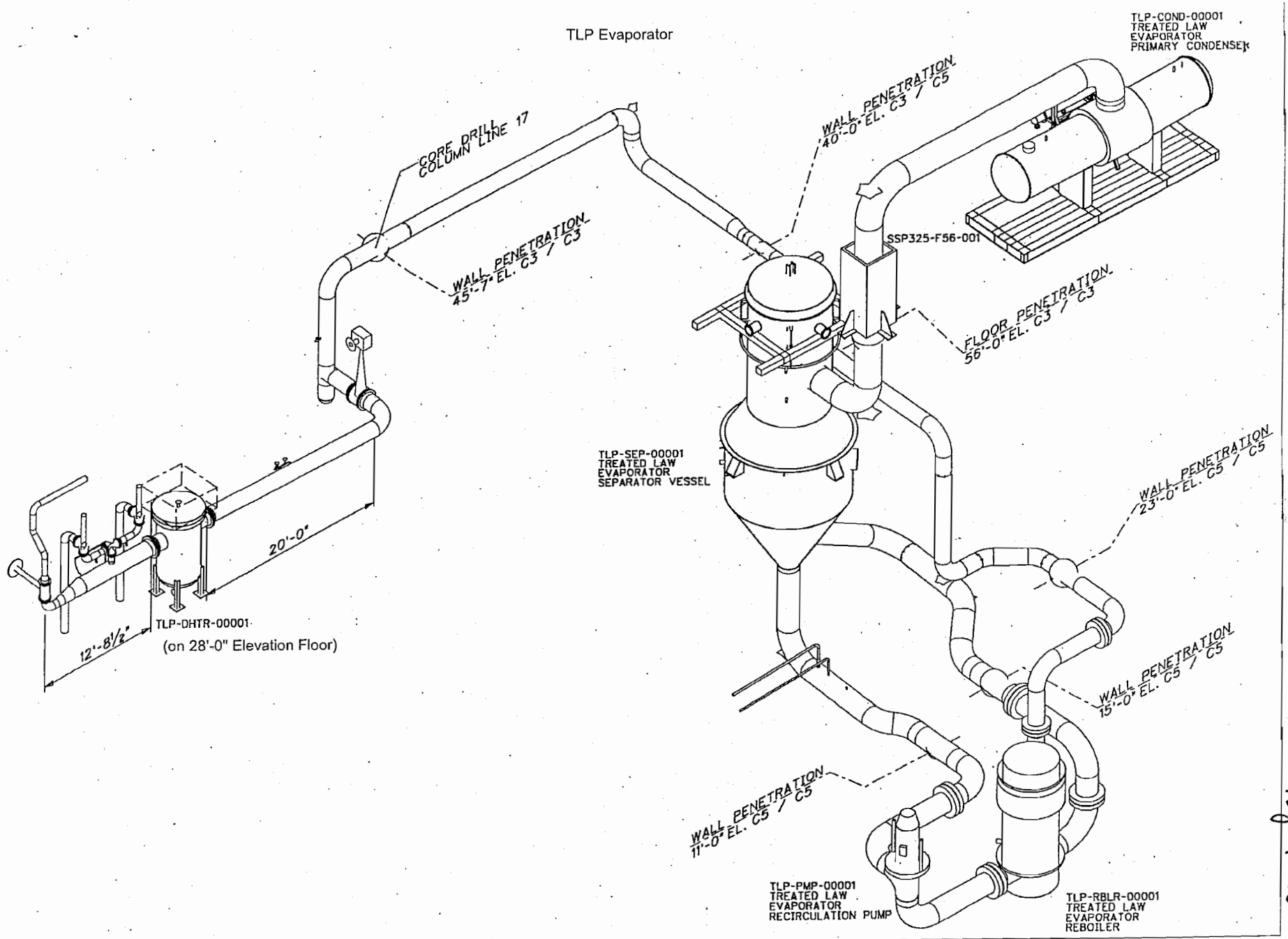

24590-PTF-3PS-MEVV-T0001 Rev. 3
Pg T-18

TLP

PTF
28'-0" Elevation
Plan View

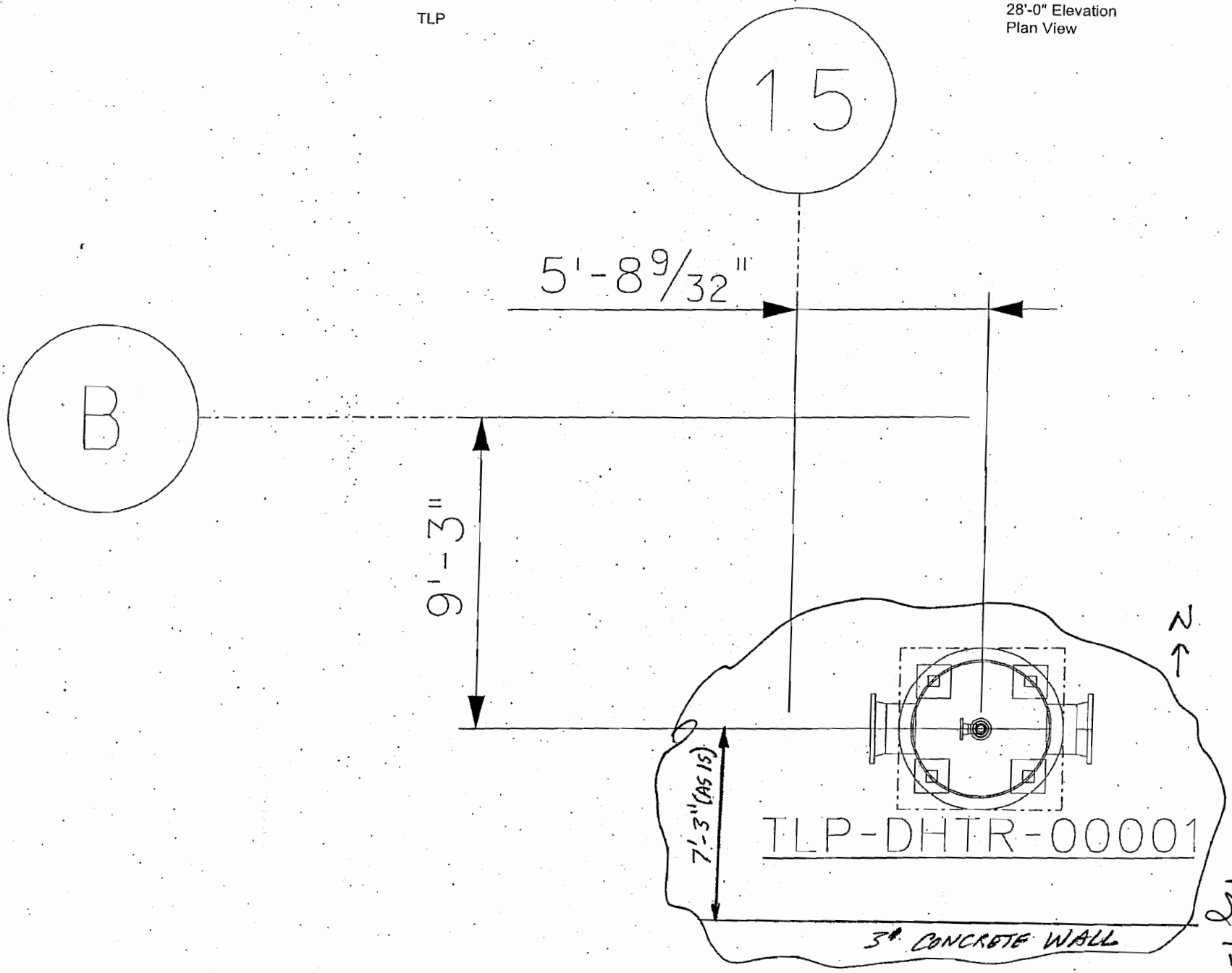

24590-PTF-3PS-MEW-T0001 Rev. 3
Pg T-19

APPENDIX U

Deleted

APPENDIX V

FEP/TLP EVAPORATOR SYSTEM COMPOSITE ANALYSES

V1. Seller shall perform a coupled dynamic analysis of each evaporator system (using stick models to represent all components, including the piping/process jumper, vessels, frames and pumps) to qualify the recirculation piping/process jumper, and offgas piping. Seller shall provide vessel nozzle loads, Grayloc loads, and all piping/jumper support interface loads. The evaporator system model shall include the separator vessel on its frames, reboiler in its frame, recirculation pump on its frame, all interconnecting large bore piping/jumpers but excluding branch piping, offgas piping, primary condenser and condenser frame (not including the vacuum system and other attachments).

V2. The coupled dynamic analysis shall be performed using the **WTP Site Specific Ground Motion (WSGM)** ISRS curves (provided in **individual MDS in section 2 of the MR**) and shall account for the seismic differential movement between 0' floor, 56' floor, and 77' floor (provided in this appendix).

V3. All piping dimensions, weights (including grayloc/guide assemblies), and support locations (including fixity) for each evaporator system are provided on the Isometric drawings included in this appendix shall be used as the design inputs for the coupled dynamic analysis.

V4. Although Seller has provided estimated process temperatures for various system condition and components, Seller shall define and use the maximum operating temperature in lieu of design temperature for each evaporator system.

V5. See attachment #5 for FEP/TLP recirculation pump frame conceptual designs. Seller is responsible for qualifying all support structures above 1'-4" in elevation, including all interface plates, bolts, nuts, and dowel pins for reboiler support frame and pump support frame. Seller is responsible for providing all final frame member sizes and configuration, all weld and joint designs, dowel / bolting configuration, quantity of bolts /nuts, and frame calculations to be submitted to Buyer for review. Location of dowels and location / quantity of bolts shall be provided to Buyer for review and permission to proceed.

V5.1 Top of concrete filled steel frame elevation will be 1'-4"

V5.2 Concrete filled steel frame will be rigid, e.g. 33 hz or greater

V5.3 Top of sole plate shall be 2'-2" in plant elevation for pump support. Top of sole plate for reboiler shall be 2'-2 5/16". Bottom of pump support and reboiler support frame shall be designed to interface with the corresponding sole plate without the use of shims.

V5.4 Seller shall qualify structural steel between 1'-4" and 2'-2" or 2'-2 5/16". Seller must design all weld joints and provide all weld details to Buyer. Buyer will be responsible for remotability interface and fabrication drawings.

V5.5 There will be two 4" diameter Dowel Pins per frame (opposing corners) as shown on drawings which will take the shear loads. The 4" diameter dowel pin is an assumption. Seller is responsible to verify and size the dowel pin diameter with actual loads. All Dowel pin material shall be ASTM A582 Type 416.

V5.6 Seller shall qualify all plates, structural steel, dowel pins, the bolting interface, and all weld joint designs.

V5.7 Initial assumption, there are two bolts per plate. Bolts shall be 1 1/4" - 8 ACME - 2G. Stud material shall be ASTM A564 Type 630 condition H1150 and Nut material shall be ASTM A194 Grade GR 8S. Seller is to determine quantity and configuration for studs. Stud location shall be submitted to Buyer for review and permission to proceed. Note: Tightening torque from impact wrench is 400 ft-lbs ± 25%. Loosening torque from impact wrench is 700 ft-lbs ± 25%. Tightening and loosening torques are not adjustable, or variable over time.

V5.8 Seller shall qualify recirculation pump frame. Seller must design all weld joints and provide all weld details to Buyer. Seller shall provide detail design of the frame in the form of a drawing that includes member sizes, configuration and weld design. The drawing shall be sufficient for Buyer to solicit a fabricator who can generate fabrication drawings. Buyer will be responsible for remotability interface for pump frame.

V6. Seller shall perform detailed Finite Element Analysis uncoupled dynamic analysis using **WSGM** ISRS curves of individual SC-I/SC-II vessel/equipment (including recirculation pumps) of each evaporator system. Internal components, supports, and piping systems shall be analyzed the same as the parent vessel/equipment.

V7. The report(s) shall be officially submitted to Bechtel for review per G321-E Categor**ies 7.0 and** 8.0. The report(s) shall include pipe/jumper stress, nozzle loads, Grayloc loads, all piping/jumper support interface loads, pipe support design recommendations, and results of the coupled dynamic analysis of each evaporator system and FEA dynamic analyses for individual SC-I/SC-II components. Seller shall use the "SC-I/II Seismic Analysis Qualification and FEA Report Check List" provided in attachment #6 to document required data in their reports.

V8. Listed below are design inputs to be used

V8a. See Attachment #3 for 24" grayloc/guide assemblies design inputs provided on the isometric sketches.

V8b. **WSGM Site Specific Ground Motion (WSGM)** In-Structure Response Spectra curves **(refer to individual MDS in section 2 of the MR for WSGM ISRS figures).**

V8c. BNI TLP Coupled Structural Analysis Draft Report (See Attachment #2)

V8d. FEP/TLP Evaporator recirculation Isometrics and Mid Roller details (see Attachment #3)

V8e. Nozzle loading for separator vessels shall be based on actual values as listed in tables 1, 2, and 3 of Attachment #4. The Seller shall use the actual nozzle load values instead of the values shown in the table in Appendix A of the Pressure Vessel Design and Fabrication Specification,

24590-WTP-3PS-MV00-T0001. The thermal reduction factor found in 24590-WTP-3PS-MV00-T0001, Section 3.7.4, shall not be applied. The nozzle load for separator vessel offgas outlet nozzle (N04), discharge nozzle (N10) and inlet nozzle (N11) shall be per Seller's design & qualification using the results of the coupled **dynamic analysis**. **Please note that nozzle N13 loads have been reduced in this document revision.**

V8f. Nozzle loading for condenser vessels (FEP-COND-00001A/1B/2A/2B/3A/3B and TLP-COND-00001/2/3) shall be based on nozzle design loads for non-black cell vessels provided in table 4 of Attachment #4. The Seller shall use these nozzle load values instead of the values shown in the table in Appendix A of the Pressure Vessel Design and Fabrication Specification, 24590-WTP-3PS-MV00-T0001. The thermal reduction factor found in 24590-WTP-3PS-MV00-T0001, Section 3.7.4, shall not be applied. The primary condenser offgas inlet nozzle (N01) shall be per Seller's design and qualification using the results of the coupled **dynamic analysis**.

V8g. Nozzle loading for reboiler vessels (FEP-RBLR-00001A/1B and TLP-RBLR-00001) shall be based on nozzle design loads **provided in attachment #9 of this Appendix. Seller shall supply and design the all supports for reboiler small bore piping as specified in attachment #9.** The Seller shall use these nozzle load values **as specified in the attachment #9 of this Appendix** instead of the values shown in the table in Appendix A of the Pressure Vessel Design and Fabrication Specification, 24590-WTP-3PS-MV00-T0001. The thermal reduction factor found in 24590-WTP-3PS-MV00-T0001, Section 3.7.4, shall not be applied. The reboiler process inlet nozzle (N01) and outlet nozzle (N02) shall be per Seller's design and qualification using the results of the coupled **dynamic analysis.**

Attachment #9 of this appendix provides updated all nozzle loads and also support loads layout for the small bore piping of reboilers. The provided sketches show the proposed/preliminary small bore piping routing, support directions, and support locations. Seller shall coordinate with the Buyer to finalize all reboiler nozzle locations. Note that the nozzle loads are reported at the vessel shell. Please be advised that these new locations are tight and extreme care will be need to be taken not to damage the small bore piping when removing the reboilers from the up-ender skids. Please note that original steam vent routing and nozzle locations would have posed potential interferences when installed on the up-ender skid. The drain lines need to exit the bottom of the vessel vertically, the PUREX kick-off plates are lower than the bottom of the reboiler base plates. Seller shall raise FEP/TLP reboiler drain nozzle elevation by at least 1.5 inches in order to make any modification to the kick-off plates or connectors unnecessary. Seller will need to pay particularly close attention to items like new nozzle locations, pipe routing, the feasibility of the support directions and locations, potential up-ender interferences and the vulnerability of these small bore lines.

V8h. Nozzle loads for recirculation pumps shall be per Seller's design & qualification using the results of the coupled **dynamic analysis**.

V8i. For TLP-SEP-00001,

a. The relative floor movement at location Row D/Column 18 at elevation 0' to location Row D/Column 18 at elevation 56' is: 0.06" EW; 0.23" NS, and 0.03" vertical

b. The relative floor movement at location Row D/Column 18 at elevation 77' to location Row D/Column 18 at elevation 56' is: 0.04" EW; 0.12" NS, and 0.12" vertical

V8j. For FEP-SEP-00001A,

a. The relative floor movement at location Row J/Column 8.8 at elevation 0' to location Row J/Column 8.8 at elevation 56' is: 0.06" EW; 0.20" NS, and 0.08" vertical

b. The relative floor movement at location Row J/Column 8.8 at elevation 77' to location Row J/Column 8.8 at elevation 56' is: 0.04" EW; 0.08" NS, and 0.12" vertical

V8k. For FEP-SEP-00001B

a. The relative floor movement at location Row J/Column 10.5 at elevation 0' to location Row J/Column 10.5 at elevation 56' is: 0.06" EW; 0.21" NS, and 0.05" vertical

b. The relative floor movement at location Row J/Column 10.5 at elevation 77' to location Row J/Column 10.5 at elevation 56' is: 0.05" EW; 0.09" NS, and 0.11" vertical

V8l. FEP/TLP recirculation pump frame conceptual design (See attachment #5).

V8m. Seller shall perform and prepare all analyses for SC-I/SC-II vessels and equipment in accordance with the analytical methodology as described in attachment #7, Structural Analysis Requirements. The Structural Analysis Requirements (attachment #7) define the methodology, input data, acceptance criteria and output format to be used by Seller for preparation of structural analyses for evaporator vessels and equipment. These analyses cover frames/skids, piping, vessels, and heat exchangers and implement all relevant purchase order requirements.

- **Industry standards such as the ASME Code, AISC N690 and the TEMA Standard.**
- **Imposed Seller specifications**
- **Project-specific agreements reached between Buyer and Seller**

The pressures, temperatures, and other data are the latest at the time of issue of this document and are presented for information only. Seller shall use the updated data provided in individual MDS in Section 2 of the MR.

V8n. Piping Penetration Clearances

The floor and wall penetrations do not provide any restraint to the FEP/TLP evaporator recirculation piping or off-gas piping. Listed below are applicable penetration drawings associated with the subject piping that will be used to check if the existing clearances are acceptable due to thermal and seismic piping movements.

1) **Hot cell wall penetrations - FEP Evaporators**
   24590-PTF-DB-S13T-00165
   24590-PTF-DB-S13T-00172

24590-PTF-DB-S13T-00214
24590-PTF-DB-S13T-00166
24590-PTF-DB-S13T-00227
24590-PTF-DB-S13T-00171

2) Hot cell wall penetrations - TLP Evaporator
24590-PTF-DB-S13T-00159
24590-PTF-DB-S13T-00205

3) 56-ft floor penetrations - FEP Evaporators
24590-PTF-DB-S13T-00050
24590-PTF-DB-S13T-00051

4) 56-ft floor penetration - TLP Evaporators
24590-PTF-DB-S13T-00048

V8o. Ceiling Steel Stiffness Calculation Guideline for FEP and TLP Separator Frame Interface for Seismic and Thermal Analysis

Seller should use the value specified in the table of Coefficient of Expansion for 100 degrees = 100e, AISC 9th Edition, Page 6-6. For concrete, 100e = 0.00055. For stainless steel, 100e = 0.00099. Please note that Seller used slightly different thermal coefficient for stainless steel, e = 0.000009186 in/in-degree, based on ASME B31.1-1996. The equivalent 100e = 0.0009186. Seller needs to determine what is appropriate coefficients to use and implement consistent values in all of the applicable analyses.

<u>The stiffness guidelines are as follows:</u>

1. TLP Separator: Reference to Drawing 24590-PTF-SS-S15T-00034 and Drawing 24590-QL-POA-MEVV-00001-01-00287 (Seller doc # 02-5040816D-07). This separator is located on column lines 18 & D.

A. Two connections to East W30x235 girder: Each connection has East-West support from the opposite W27 beam, which is firmly connected to the Elevation 56' slab through studs. Therefore, each is fixed in East-West translation.

B. Two connections to West W30x235 girder: The W30 girder top flange is connected to concrete slab through studs. Therefore, lower bound stiffness can be calculated based on a cantilever beam, fixed at top flange.

Length L = 11" (Elev. 53'-0" TOS to about Elev. 52'-1" - centerline of tube steel) with cross section of 10 1/2" (bf of WT 8 x 50) x 0.83" (web of W30).

I = 10.5 x (0.83)^3 /12 = 0.5 in^4.
E = 29000 psi.
Lower bound k = 3EI/L^3 = 32.7 k/in. Seller needs to confirm to use this value.

Exact stiffness is not determined since it requires a FEA analysis. But it is safe to say the upper bound k is less than 5 times of the lower bound value.

Implementing into existing GTSTRUDL model, even with the upper bound k, will reduce thermal reaction load at East side to about 12 kips (which was based on outdated temperature). Seller needs to verify and confirm with new provided temperatures in MDS. Thermal loads will be much less with lower bound stiffness. However, no matter which k be used, most of the seismic loads and other loads in the East-West direction will be shifted to the East connections. Seller needs to confirm.

In addition, if the effect of concrete thermal expansion is included, the thermal loads should be even less. If Buyer's observation is true, Seller does not need to revise the existing model, since this thermal effect only affects the upper connections to Buyer's beams and has negligible impact to the rest of separator and skid. Frequency remains unchanged due to East connections being fixed. Therefore, seismic loads remain unchanged, except stating that East side connections should take the East-West reactions from the other two nodes. Same is true for other loads.

To avoid this exercise, Seller may want to consider leaving a 1/16" gap to the West bolt connections. Then Seller does need to implement the stiffness to GTSTRUDL. Thermal loads will not exist on the W30 girder. It will only have seismic loads and other design loads, applied to the East connections.

2. FEP 1A Separator: Reference to Drawing 24590-PTF-SS-S15T-00037 and Drawing 24590-QL-POA-MEVV-00001-01-00287 (Seller doc # 02-5040816D-07). FEP 1A is located on column lines 8, 9 & J.

A. Two connections to East W36x393 girder: Each connection has East-West support from from the opposite W30 beam, which is firmly connected to the Elevation 56' slab through studs. Therefore, each is fixed in East-West translation.

B. Two connections to West W36x235 girder: Can perform stiffness calculation similar to TLP Separator.

Cantilever beam length L = 14" (Elev. 52'-0" TOS to about Elev. 50'-10" - centerline of tube steel)
Cross Section: 10.5" x 1.22"
Lower bound k = 50.4 k/in. Seller needs to confirm to use this value.

Exact stiffness is not determined since it requires a FEA analysis. But it is safe to say the upper bound k is less than 5 times of the lower bound value.

3. FEP 1B Separator: Reference to Drawing 24590-PTF-SS-S15T-00037 and Drawing 24590-QL-POA-MEVV-00001-01-00287 (Seller doc # 02-5040816D-07). FEP 1B is located on column lines 10 & J.

Similar to 1A separator, except the connections to West W36x393 girders are fixed, connections to East W36x393 girders are flexible.

Please note that Drawings 24590-PTF-SS-S15T-00034 and 24590-PTF-SS-S15T-00037 are provided in Section 2 of the MR.

V8p. Separator Vessel Base Interfaces

1) For FEP/TLP separator vessel base frames (lower frames), not only is the interior box formed by the girders filled with grout, but the area around the outside the girders is also filled with grout, the boundary conditions that Seller had used previously will be changed to reflect this. Seller's GTSTRUDL model will be stopped at the top of the girders instead of the bottom of the girders. Seller will perform a detailed analysis on the girders that are essentially embedded in grout by using the support reaction loadings from the GTSTRUDL model.

2) Seller shall revise separator vessel lower support frame (square ring beams) drawings and calculations to reflect actual field welds (from lower support frame to embeds). The ring beams were prepped with a 1/2" bevels as per Option B on 24590-PTF-DD-S13T-00045 (provided in Section 2 of the MR), partial penetration weld. The partial penetration weld required a reduction in the root gap of 1/8" so the effective weld size is approximately 3/8" and the weld is full length rather than stitch welds.

V8q. Evaporator System Hydro-Testing

1. Only the Recirc loop/off-gas side of the system will be hydro-tested (Separator, Reboiler, Recirc pump, Recirc loop piping, off-gas piping, and primary condenser shell side). The desuperheater, Reboiler shell side, Roth systems, primary condenser tube side, etc. will not contain water during the test and will not be pressurized.

2. The pressure to which the system will be pressurized at the port on top of the off-gas piping is 1.3 times design pressure (1.3 x 50 = 62.5 psi) per VIII Div 1 UG-99. B31.3, 345.4.3(b) permits a pressure of 77% of the piping test pressure to be used, which would be .77*1.5 = 1.16 times design, so 1.3 times design is acceptable.

Where the test pressure of the piping exceeds the vessel test pressure, and it is not considered practicable to isolate the piping from the vessel, the piping and the vessel may be tested together at the vessel test pressure, provided the owner approves and the vessel test pressure is not less than 77% of the piping test pressure calculated in accordance with para. 345.4.3(b).

3. For purposes of this analysis, Seller will consider all nozzles are blocked off at the end of Seller scope of supply.

4. No other accident loads or thermal loads will be combined with resultant loads for the hydro. Hydro should ONLY include pressure and weight.

5. The off-gas piping being supported by spring hangers will be mechanically blocked to prevent over-stress of the springs. Seller might need to add a temp support, as this triples the weight of the pipe.

6. The loads at the nozzles from the filled pipes that are in Buyer's scope are provided below:

6.1 Separator Vessels

- **Seller can determine the loads on the large lines from their coupled dynamic analysis.**
- **Seller is to use the deadweight loads from Table 1, 2, and 3 of this Appendix (attachment #4) for all miscellaneous nozzles of FEP/TLP separator vessels.**

6.2 Reboilers

- **Seller can determine the loads on the large lines (nozzle N01 & N02) from their coupled dynamic analysis.**
- **For the 18" steam line to the reboiler (nozzle N03) and the small bore nozzles on the reboilers, Seller shall use the deadweight loads given in the attachment #9.**

6.3 Condensers

- **Seller can determine the loads on the large lines from their coupled dynamic analysis.**
- **Seller is to use deadweight loads from table 4 of attachment #4 of this appendix.**

V8r. Maximum Allowable Skid Foot Print for FEP and TLP Condensers

Seller shall make necessary design changes required to FEP and TLP condenser skids to obtain minimum frequency of 20 hz as a target. Sketches provided in attachment #8 of this appendix show the maximum allowable skid footprint for FEP and TLP condensers. Embed locations can be moved according the need for the condenser skids. The slabs are not scheduled to be poured till after 1/1/2011 for 56 ft and 77 ft elevations.

V8s. Pressure and Temperature Inputs for vessel internal piping/and utility piping

Attachment #10 of this appendix provides design inputs for pressure and temperature for Buyer piping nozzles to be used in Seller's vessel analysis. Piping pressures and temperatures shall be accounted in the vessel finite element analyses or vessel code calculations for piping components internal to the vessel and utility inlet nozzles such as spray headers, dip tubes, and other internal piping. These pressure/thermal stresses could potentially impact the design of the piping and/or the attachment points for the pipe.

V8t. Insulation

Insulation for piping are defined by Buyer's P&IDs. Listed below is the insulation information for vessels applicable for this order. Seller shall include insulation as applicable to their equipment design. However, insulation will be provided by Buyer.

1) **Desuperheater vessels: 4" insulation of heat conservation.**

2) **Reboiler steam condensate receiver vessels: 1.5" of heat conservation.**

V8u. TLP reboiler frame and sole plates modification

Seller shall incorporate design modification provided in the attachment #11 which shows changes made to existing TLP reboiler frame and sole plates.

V8v. Cooling Water Isometrics

FEP and TLP primary condenser cooling water piping isometrics are provided in the attachment #12 of this appendix. Seller shall include these isometrics in their coupled dynamic analysis. However, Buyer is responsible for qualification of the primary condenser cooling water piping.

This page is intentionally left blank

ATTACHMENT #1

DELETED

ATTACHMENT #2

BNI TLP Coupled Structural Analysis Draft Report

Memorandum

To:	Le, E.	MS5-H	Date: June 15, 2006
	Minichiello, J.	MS6-N2	
	Ocoma, E.C.	MS6-N1	
From:	E.O. Weiner		CCN: 122811
Ext:	371 3150		

Subject: **PT TLP COUPLED STRUCTURAL ANALYSIS**

Reference: SCN 24590-PTF-3PS-MEVV-T0001 Rev 1.

Attached is the coupled analysis draft as called for in Appendix U of the reference and containing supplemental tasks to date.

The draft has been checked.

This CCN supercedes CCN 134137.

E.O. Weiner
Structural Analyst
CSA

Attachment Draft: PT TLP Coupled Analysis for Evaluation of Nozzle Loads

Distribution

Copy Coverage	MSIN
Jeffrey, A.H.	MS5-K
Power, J.	MS5-K
Julyk, J.	MS5-I
PDC	MS9-A

BY: E.O. Weiner
DATE: 6/15/06

SUBJECT: PT TLP Coupled Structural Analysis for Evaluation of Nozzle Loads

Contents

1 Objective 2
2 Inputs 3
3 Background 3
4 Applicable Codes and Standards 4
5 Methodology 4
5.1 Piping Models 4
5.2 Vessel and Support Frame Models 4
5.3 Merging of the Models 4
5.4 Seismic Analysis 6
5.5 SAP2000 Results Cases 9
5.6 Analysis Cases 9
6 Assumptions 11
7 Calculations 11
8 Results and Conclusions 11
9 References 36

BY: E.O. Weiner
DATE: 6/15/06

SUBJECT: PT TLP Coupled Structural Analysis for Evaluation of Nozzle Loads

1 Objective

The objective of this analysis is to describe the effects of coupling on the nozzle loads of the TLP (Treated LAW Evaporation Process) arrangement consisting of a separator, pump, reboiler and major connecting piping. Load considered are deadweight, seismic and thermal. Nozzle loads are compared for coupled and uncoupled analysis and anchor movements are compiled. The first three analysis cases were specified in Ref. SCN, Section 8. The remainder evolved as requested by the participants of the study.

Analysis Cases

Case	Type	Pump Mount	Nozzle Flexibility	Other
8a	Uncoupled	Fixed	No	
8b	Coupled	Free EW & NS	No	
8c	Coupled	Free EW & NS	Yes	
8d	Coupled	Free EW	Yes	
8e	Uncoupled	Fixed	Yes	
8f	Coupled	Free EW	Yes	No Grayloc weights
8g	Coupled	Free EW	Yes	Removed separator top support
8h	Coupled	Free EW	Yes	Pre-RGM spectra
8i	Coupled	Free EW	Yes	NS support at top of 2nd elbow of reboiler discharge line
8j	Coupled	Fixed	Yes	8i plus pump fixed to frame
8k	Coupled	Free EW	Yes	8i plus replacement of separator discharge NS constraint with NS restraint on far end of 2nd elbow from pump inlet line.
8L	Coupled	Fixed	Yes	8k with fixed pump mount
8o	Coupled	Free EW	Yes	8i with 10.5 Kip upward load support on reboiler discharge line to represent a spring can support. Piping and vessels have 131 F temperature instead of 150 F.
8p	Coupled	Gapped	Yes	8i with 1/8" gap at west pump support point. Piping and vessels have 131 F temperature instead of 150 F
8q	Coupled	Gapped	Yes	8p with 1/16" gap instead of 1/8".
8r	Coupled	Gapped	Yes	8q with 1/32" gap.
8s	Coupled	Gapped	Yes	8r with Elev 00' spectra and 10.5 Kip upward load support on reboiler discharge line.

BY: E.O. Weiner
DATE: 6/15/06

SUBJECT: PT TLP Coupled Structural Analysis for Evaluation of Nozzle Loads

2 Inputs

Design Inputs

Item	Reference
Piping arrangement & properties	Ref SCN, Item 10c. Item includes piping isometrics with restraints, Grayloc fitting locations and weights. NS restraint at reboiler discharge was omitted per Ref. ECO
Piping content	Specific gravity 1.57
Separator model	GTSTRUDL (Ref GTS) model, from analysis of Ref A472
Reboiler model	GTSTRUDL model, from analysis of Ref A402
Pump frame	Fig 2 of Ref A603
Pump arrangement	Ref A647B
Pump weight & cg	Section 3.0 of Ref A603
Design temperatures	Frames 113 F Vessels, piping 150 F Reference 75 F
Seismic inertial loading	Ref SCN Item 10b with ISRS attachments. Damping = 3%.
Seismic drift loading	Drift of Elev 56' relative to Elev 00' is 0.06" EW, 0.23" NS, 0.03" Vertical per Ref. SCN Item 10d.
Material properties	Stainless steel Young's Modulus 28e6 psi Poisson's ratio 0.3 Coeff. Thermal Exp 9.25e-6 F^{-1} Density 0.284 lb/in^3
Nozzle flexibility for separator & reboiler	Vendor supplied. See table below.

Nozzle Stiffness Components

Component	Vessel: Nozzle:	Separator Dischg	Separator Inlet	Reboiler 24"	Reboiler 18"	Pump All
Axial	lb/in	9.39E+06	4.97E+05	7.78E+05	3.24E+06	1e9
Lateral	lb/in			1.00E+09	1.00E+09	1e9
Torsional	lb/in/rad	4.02E+09	3.27E+09	1.00E+09	1.00E+09	1e12
Outplane-rotational	lb/in/rad	2.15E+09	3.83E+07	9.95E+07	2.54E+08	1e12
Inplane-rotational	lb/in/rad	2.15E+09	2.71E+08	4.74E+08	4.52E+08	1e12

Notes
1. Unspecified lateral components set to 1e9. Rotational components given as 1e9 were set to 1e12, because there were flexible values given on the order of 1e9.
2. 24" reboiler data apply to inlet and discharge. 18" nozzle is not connected to piping.
3. Separator and reboiler components provided by vendor. Pump components are rigid per tee data of B31.3.

3 Background

Uncoupled analysis typically offers more restraint to thermal expansion than the more complex coupled analysis. Therefore, coupled analysis is expected to have lower nozzle loads.

4 Applicable Codes and Standards

ASME B31.3-2004, ASME Code for Process Piping.

5 Methodology

Models for the separator, reboiler, pump and piping were imported into SAP2000, Ref SAP, as separate models and then merged into one model.

5.1 Piping Models

Piping models were generated with an Excel VBA routine that takes keypoints and tangent intersections and produces joints and straight frame members representing straight runs and elbows with refinement. The elbows are modeled with 10° segments, and straight runs are limited to 2 ft. The data is imported into SAP2000, and the loadings, materials and sections are input graphically. Each of the five piping runs is a separate model.

Elbow flexibility (a section property) was used with the bending stiffnesses of the straight sections in the elbow and not with the torsional stiffness. The flexibility factor for the 24" OD x 0.375"T long radius elbow for both in-plane and out-of-plane is 16.27 (Ref B31.3 App D).

5.2 Vessel and Support Frame Models

The separator and reboiler vessels and their frames were provided as two GTSTRUDL models that were imported to SAP2000. The pump and frame model was developed from scratch.

5.3 Merging of the Models

The coupled model was obtained by merger of the individual models achieved by import after consistent positioning controlled by the piping arrangement. Short links between vessels and piping were added with the given nozzle stiffness properties. The merged model is shown below in an extruded view. The separator and reboiler vessels as well as the pump motor are shown as equivalent stick elements. The cross-sectional dimensions are scaled to solid cross sectional area. If they were scaled to radii of gyration, they would overwhelm the rest of the model. The XYZ coordinate triad shown in the figure gives the orientation of the SAP2000 global coordinate system that is used for reporting global results such as anchor movements.

BY: E.O. Weiner
DATE: 6/15/06

SUBJECT: PT TLP Coupled Structural Analysis for Evaluation of Nozzle Loads

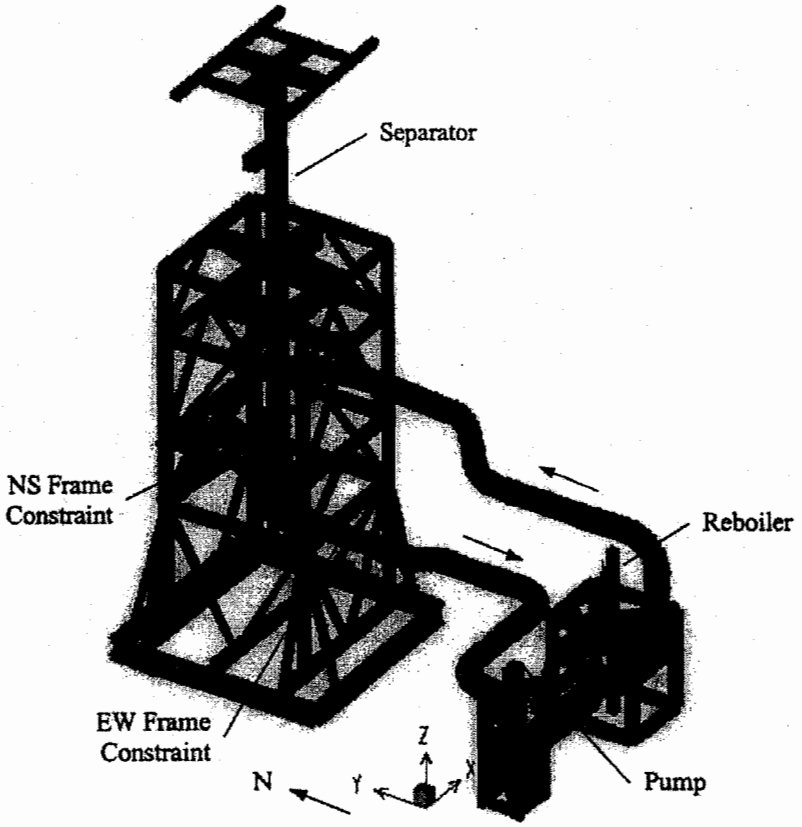

Merged Model

Two piping constraints to the separator frame are shown. They are not detailed in Ref SCN. For the constraint nearest the discharge nozzle, a weightless X-brace was placed in the north side of the frame to get a joint in line with the desired point of constraint. A TS10x10x5/8 section was then brought to the piping to provide a NS constraint. The choice of member end releases in the X-brace provides the NS support required but does not affect the inplane behavior of the north side of the frame. The EW constraint was implemented by a simple constraint condition to a joint in the center of a nearby EW beam. The frames are supported at their bases. The separator is also supported at the top. The piping restraints (to ground) are shown in the following piping restraint diagram.

BY: E.O. Weiner
DATE: 6/15/06

SUBJECT: PT TLP Coupled Structural Analysis for Evaluation of Nozzle Loads

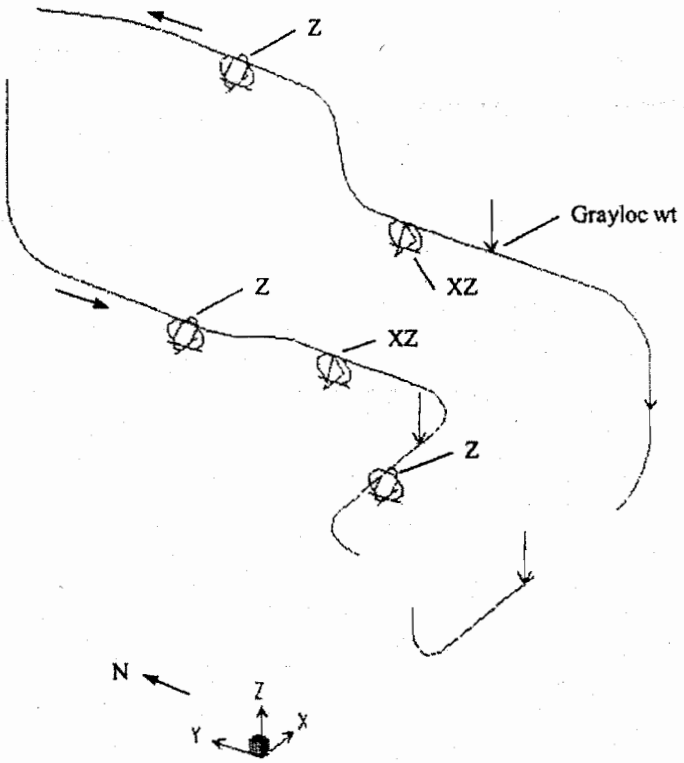

Piping Restraints and Grayloc Locations (Case 8d)

5.4 Seismic Analysis

Seismic data and parameters used in the analysis are as follows.

Seismic Parameters

Item	Description
Modal Analysis	Load Directed Ritz method
Inertia	From deadweight loading
Ritz Vectors	Linear in each direction: 8 Rotational about each axis: 3
Number of Modes	24
Damping	3%
Frequency Range	3.8 - 71 Hz (Case 8d)
Mass Participation	X = 95%, Y = 97%, Z = 92% (Case 8d)
Seismic Analysis Method	Response Spectrum Analysis
Modal Combination	CQC
Loading Directions	EW = X, NS = Y, Vert = Z
Directional Combination	SRSS.
Drift Combination	SRSS.

BY: E.O. Weiner
DATE: 6/15/06

SUBJECT: PT TLP Coupled Structural Analysis for Evaluation of Nozzle Loads

Enveloped response spectra are shown below. The RGM data is that specified in Item 10b of the SCN, but the spectrum of Fig 407 was omitted in the envelope since there is no piping restraint normal to the wall. The Pre-RGM data precedes this data and corresponds to the same figure numbers in Ref. 00005A.

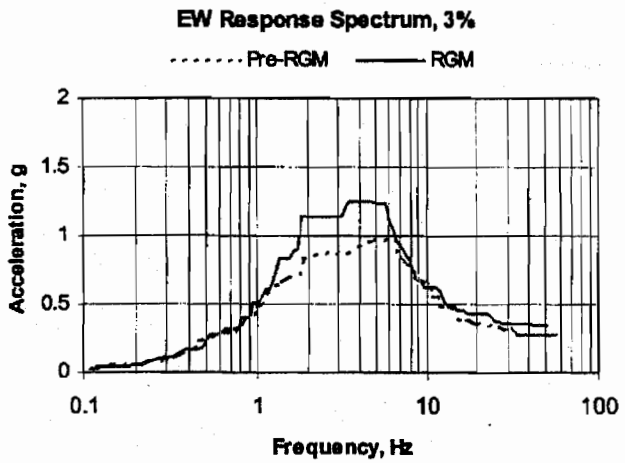

BY: E.O. Weiner
DATE: 6/15/06

SUBJECT: PT TLP Coupled Structural Analysis for Evaluation of Nozzle Loads

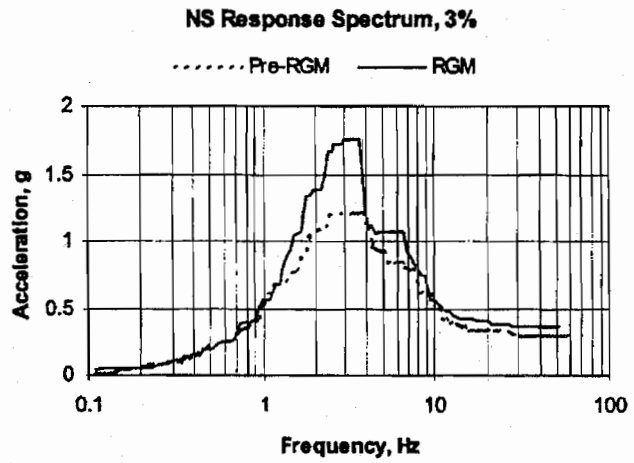

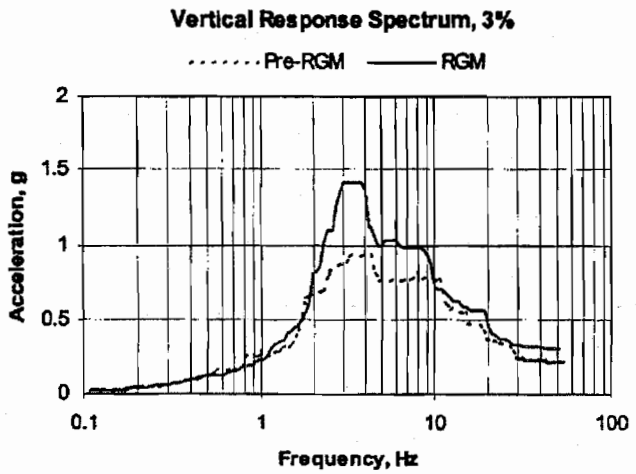

Case 8s used unenveloped RGM Elev 00 spectra that essentially leave out the Elev 56 effects. The vertical spectrum is the same as before. The horizontal spectra are those of Figures 21E and 22E of Ref. SCN, Item 10.b, and are shown below.

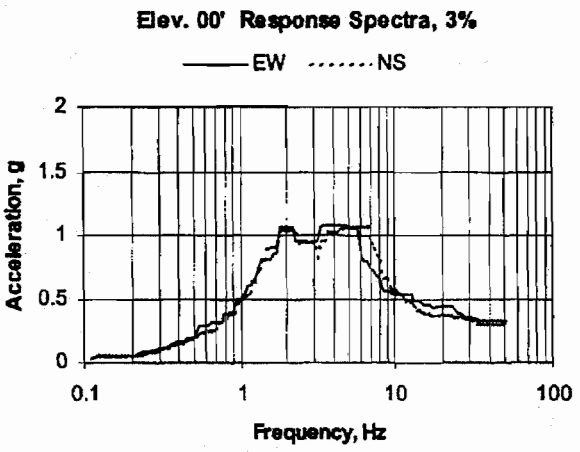

The static drift solution has the prescribed displacements at the top of the separator and 1/3 of those displacements at the piping restraints.

5.5 SAP2000 Results Cases

SAP2000 results cases (analysis cases and combinations) are as follows.

Results Cases

Case	Description
D	Deadweight
T	Thermal
MODAL	Modal analysis
RS	Response spectrum analysis
Dr	Drift
E	Seismic = SRSS of Dr and RS

5.6 Analysis Cases

Separate models were created for the various analysis cases. Each model is a modification of the merged model that was set up for Case 8d with the RGM spectra. The first three are those of Ref. SCN, and the remainders were subsequently requested by the participants of the study (J. Minichiello, E. Le, E. Ocoma & J. Julyk).

BY: E.O. Weiner
DATE: 6/15/06

SUBJECT: PT TLP Coupled Structural Analysis for Evaluation of Nozzle Loads

Analysis Case Modifications

Analysis Case	Parent Case	Model Changes Relative to Parent Case
8a	8e	Relative to the final model of 8e, the nozzle links were assigned stiff properties.
8b	8d	Nozzle links were assigned stiff properties. Pump was set free in the horizontal plane.
8c	8d	Pump was set free in the horizontal plane.
8d		Parent model
8e	8d	Nozzle links were separated from the vessels but retained with the piping, thus isolating the runs between the pump, reboiler and separator. Vessel joints previously connected to the links were left free. Analysis provides anchor movements at these vessel-side joints. The deadweight and thermal movements were input as prescribed displacements on the piping-side joints. The seismic and drift displacements at all piping supports are input as zero. The vessels and frames were deleted to avoid obscuring mass participation of the piping, and the model was reanalyzed.
8f	8d	Removed Grayloc weights. This affects deadweight and seismic inertia.
8dB	8d	Constrained frame bases and top support to single joints for reporting reactions needed to compare with Case 8g.
8g	8dB	Removed separator top support.
8h	8d	Reread spectral functions with pre-RGM data.
8i	8d	Added NS restraint at top of 2nd elbow of reboiler discharge line.
8j	8i	Fixed the pump to the frame.
8k	8i	Replaced separator discharge NS frame constraint with NS ground restraint on far end of 2nd elbow from pump inlet.
8L	8k	Fixed the pump to the frame.
8o	8i	Added 10.5 Kip upward load support on reboiler discharge line between the first and second elbow from the reboiler. This does not affect inertia for seismic loading. Piping and vessels have 131 F temperature instead of 150 F.
8p	8i	Modeled 1/8" gap in EW direction at west pump support point. The gap was modeled by fixing the pump to the frame at this support and introducing a thermal load below reference on the support arm. The gap is the free thermal expansion. A large expansion coefficient was used to avoid swamping temperature contour plots used for checking. Piping and vessels have 131 F temperature instead of 150 F.
8q	8p	Reduced 1/8" gap to 1/16".
8r	8q	Reduced gap to 1/32".
8s	8r	Used Elev 00' spectra and 10.5 Kip upward load support on reboiler discharge line.

BY: E.O. Weiner
DATE:6/15/06

SUBJECT: PT TLP Coupled Structural Analysis for Evaluation of Nozzle Loads

6 Assumptions

Item	Assumption
Pump support	Various cases of pump fixity to the frame were considered, including gaps.
Nozzle stiffness	Vendor provided data, see Inputs section
Vessel & frame geometry, dimensions and weights	Base on preliminary data
Piping arrangement	Base on preliminary data
Weights of Grayloc fittings	Base on preliminary data
Piping constraints near separator discharge	Analyst provided. See Section 5.3.
SAP V&V	Dynamics features not included in Ref SAPVV.

7 Calculations

All calculations are in the SAP2000 system, Version 10. Verification and validation are reported in Ref SAPVV. It is to be noted that this reference does not cover dynamics features of the program.

8 Results and Conclusions

Nozzle loads and anchor movements from the SAP2000 analyses are shown in the following tables.

Results Tables - Description and Location

Table	Purpose	Page
Nozzle Loads	List P, V1, V2, T, M2 & M3 nozzle loads	12
Pump Support Gap Closure Loads	Gap compression loadings in west pump support arm indicate closure status	20
Mid-Elbow Loads	List P, V1, V2, T, M2 & M3 mid-elbow loads	21
RGM vs Pre-RGM Nozzle Loads	Compare RGM & Pre-RGM loads	25
Drift Nozzle Loads	Compare drift effects with total seismic	26
Frame Reactions	Show effect of top frame support on separator	26
Nozzle Displacements	List global nozzle displacements	27
Modal Participation	List mass participation of significant modes	34

BY: E.O. Weiner
DATE: 6/15/06

SUBJECT: PT TLP Coupled Structural Analysis for Evaluation of Nozzle Loads

Nozzle Loads

Case	Location		Load	Kip P	Kip V2	Kip V3	in-Kip T	in-Kip M2	in-Kip M3
Case 8a	Pump	Inlet	D	-0.03	0.81	-0.04	-4	-1	55
		Dischg	D	4.27	2.36	0.76	26	-18	25
	Reboiler	Inlet	D	2.38	-3.95	0.76	17	-75	36
		Dischg	D	-0.53	-10.81	0.56	25	8	-275
	Separator	Inlet	D	0.32	-1.01	-0.56	-70	28	39
		Dischg	D	4.87	0.03	0.10	-1	-3	2
	Pump	Inlet	E	1.89	1.27	3.89	9	-109	37
		Dischg	E	1.88	0.62	0.98	13	-21	9
	Reboiler	Inlet	E	2.98	1.73	1.78	12	-43	25
		Dischg	E	7.55	4.30	7.88	473	-159	444
	Separator	Inlet	E	5.39	5.83	15.27	176	-1659	444
		Dischg	E	2.48	1.37	6.19	5	-33	55
	Pump	Inlet	T	-3.41	-2.62	-7.52	124	34	-29
		Dischg	T	-20.91	-70.84	0.51	21	-2	-1918
	Reboiler	Inlet	T	-70.73	-21.27	0.51	21	-46	-1512
		Dischg	T	-1.59	-1.91	5.14	352	-26	9
	Separator	Inlet	T	0.59	-1.00	-5.14	54	559	-84
		Dischg	T	-1.73	3.28	-22.24	16	1288	347
Case 8b	Pump	Inlet	D	0.02	0.64	0.02	2	1	49
		Dischg	D	2.88	-0.02	0.02	0	-6	-29
	Reboiler	Inlet	D	0.00	-5.35	0.02	-5	-3	-95
		Dischg	D	-0.53	-10.69	0.45	21	11	-269
	Separator	Inlet	D	0.28	-0.95	-0.45	-75	15	42
		Dischg	D	4.88	0.02	0.45	-1	-25	1
	Pump	Inlet	E	3.45	2.19	10.04	75	-189	59
		Dischg	E	3.45	15.76	14.51	519	-318	421
	Reboiler	Inlet	E	18.21	4.23	19.59	436	-1968	225
		Dischg	E	11.67	9.72	17.15	1058	-278	704
	Separator	Inlet	E	8.51	9.06	28.16	277	-3010	692
		Dischg	E	5.07	5.53	29.27	110	-1242	544
	Pump	Inlet	T	-1.70	-2.45	-1.91	106	-86	-23
		Dischg	T	-0.15	1.91	-1.70	-19	54	62
	Reboiler	Inlet	T	1.91	-0.14	-1.70	-23	207	-43
		Dischg	T	-1.49	-1.78	4.74	323	-24	9
	Separator	Inlet	T	0.53	-0.96	-4.74	51	512	-82
		Dischg	T	-1.07	0.41	2.57	19	-94	60

Notes: P is axial, positive is tension. V3 is horizontal
V2 has an upward sense, unless P is vertical. Then V2 follows X (east)
M2 & M3 axes follow V2 and V3.
M2 has the sign reversed relative to the SAP2000 local system so all systems are right handed.
M2 reversal reverses the sign of the positive seismic amplitude.

BY: E.O. Weiner
DATE: 6/15/06

SUBJECT: PT TLP Coupled Structural Analysis for Evaluation of Nozzle Loads

Nozzle Loads

Case	Location		Load	Kip P	Kip V2	Kip V3	in-Kip T	in-Kip M2	in-Kip M3
Case 8c	Pump	Inlet	D	0.01	0.65	0.00	2	1	50
		Dischg	D	3.35	0.00	0.01	1	-6	-34
	Reboiler	Inlet	D	0.02	-4.88	0.01	-5	-1	-39
		Dischg	D	-0.62	-10.57	0.37	20	13	-247
	Separator	Inlet	D	0.21	-1.03	-0.37	-74	2	17
		Dischg	D	4.87	0.03	0.29	-1	-15	2
	Pump	Inlet	E	8.50	1.94	27.76	96	-285	50
		Dischg	E	5.23	32.66	13.88	1244	-97	880
	Reboiler	Inlet	E	35.39	6.19	22.76	762	-1432	128
		Dischg	E	10.91	12.12	35.48	2404	-298	560
	Separator	Inlet	E	12.58	8.32	11.65	237	-458	388
		Dischg	E	8.00	9.62	27.69	136	-838	934
	Pump	Inlet	T	-1.11	-2.34	-0.80	100	-89	-21
		Dischg	T	-0.10	0.80	-1.11	-61	19	30
	Reboiler	Inlet	T	0.80	-0.09	-1.11	-32	87	-19
		Dischg	T	-0.96	-0.97	1.75	103	0	13
	Separator	Inlet	T	-0.82	-0.24	-1.75	36	69	-13
		Dischg	T	-0.86	0.06	0.64	16	-14	23
Case 8d	Pump	Inlet	D	-0.05	0.65	-0.11	2	2	50
		Dischg	D	3.37	0.11	0.09	6	-6	-31
	Reboiler	Inlet	D	0.14	-4.86	0.09	-2	-6	-39
		Dischg	D	-0.62	-10.57	0.37	20	14	-247
	Separator	Inlet	D	0.21	-1.03	-0.37	-74	2	17
		Dischg	D	4.85	0.06	0.32	-1	-15	5
	Pump	Inlet	E	4.53	1.93	8.57	80	-165	47
		Dischg	E	2.68	15.59	2.21	316	-85	423
	Reboiler	Inlet	E	19.04	3.57	4.39	157	-74	91
		Dischg	E	9.60	10.77	30.61	2074	-254	497
	Separator	Inlet	E	11.03	7.29	10.12	206	-398	339
		Dischg	E	5.22	3.46	23.88	102	-763	325
	Pump	Inlet	T	-2.01	-2.32	-2.75	103	-64	-19
		Dischg	T	0.21	2.75	-0.10	-6	11	82
	Reboiler	Inlet	T	2.75	0.23	-0.10	6	6	-13
		Dischg	T	-0.96	-0.95	1.73	103	1	13
	Separator	Inlet	T	-0.81	-0.24	-1.73	35	69	-14
		Dischg	T	-1.14	0.58	1.15	20	-5	74

Notes: P is axial, positive is tension. V3 is horizontal
V2 has an upward sense, unless P is vertical. Then V2 follows X (east)
M2 & M3 axes follow V2 and V3.
M2 has the sign reversed relative to the SAP2000 local system so all systems are right handed.
M2 reversal reverses the sign of the positive seismic amplitude.

BY: E.O. Weiner
DATE: 6/15/06

SUBJECT: PT TLP Coupled Structural Analysis for Evaluation of Nozzle Loads

Nozzle Loads

Case	Location		Load	Kip P	Kip V2	Kip V3	in-Kip T	in-Kip M2	in-Kip M3
Case 8e	Pump	Inlet	D	-0.03	0.81	-0.04	-4	-1	55
		Dischg	D	3.86	1.30	0.14	11	-3	-2
	Reboiler	Inlet	D	1.32	-4.37	0.14	4	-7	1
		Dischg	D	-0.62	-10.66	0.40	18	12	-253
	Separator	Inlet	D	0.22	-1.08	-0.40	-70	4	16
		Dischg	D	4.86	0.03	0.06	-1	-2	1
	Pump	Inlet	E	2.03	1.40	3.95	9	-110	38
		Dischg	E	2.52	1.24	1.34	24	-31	30
	Reboiler	Inlet	E	1.65	1.44	1.25	22	-5	12
		Dischg	E	8.33	7.76	26.89	1837	-233	426
	Separator	Inlet	E	8.10	6.08	8.62	175	-336	285
		Dischg	E	2.27	1.27	5.94	6	-19	44
	Pump	Inlet	T	-3.37	-2.67	-7.31	125	29	-29
		Dischg	T	-6.66	-38.21	0.12	12	7	-1097
	Reboiler	Inlet	T	-38.18	-6.85	0.12	12	-4	-263
		Dischg	T	-0.99	-0.99	1.79	106	1	13
	Separator	Inlet	T	-0.84	-0.25	-1.79	37	72	-13
		Dischg	T	-1.69	2.59	-10.31	31	637	273
Case 8f	Pump	Inlet	D	-0.06	-0.22	-0.13	0	1	18
		Dischg	D	3.23	0.13	0.08	6	-3	-28
	Reboiler	Inlet	D	0.14	-2.05	0.08	0	-5	-18
		Dischg	D	-0.33	-6.09	0.25	15	5	-132
	Separator	Inlet	D	0.56	-1.32	-0.25	-56	-1	13
		Dischg	D	4.64	0.11	0.27	-4	-14	7
	Pump	Inlet	E	3.04	1.40	5.10	67	-91	26
		Dischg	E	2.18	12.57	1.38	200	-69	342
	Reboiler	Inlet	E	15.00	2.66	2.66	96	-51	72
		Dischg	E	4.74	6.48	18.02	1259	-141	257
	Separator	Inlet	E	8.38	5.03	6.65	127	-253	227
		Dischg	E	4.00	2.68	21.60	101	-776	246
	Pump	Inlet	T	-2.01	-2.32	-2.75	103	-64	-19
		Dischg	T	0.21	2.75	-0.10	-6	11	82
	Reboiler	Inlet	T	2.75	0.23	-0.10	6	6	-13
		Dischg	T	-0.96	-0.95	1.73	103	1	13
	Separator	Inlet	T	-0.81	-0.24	-1.73	35	69	-14
		Dischg	T	-1.14	0.58	1.15	20	-5	74

Notes: P is axial, positive is tension. V3 is horizontal
V2 has an upward sense, unless P is vertical. Then V2 follows X (east)
M2 & M3 axes follow V2 and V3.
M2 has the sign reversed relative to the SAP2000 local system so all systems are right handed.
M2 reversal reverses the sign of the positive seismic amplitude.

BY: E.O. Weiner
DATE: 6/15/06

SUBJECT: PT TLP Coupled Structural Analysis for Evaluation of Nozzle Loads

Nozzle Loads

Case	Location		Load	Kip P	Kip V2	Kip V3	in-Kip T	in-Kip M2	in-Kip M3
Case 8i	Pump	Inlet	D	-0.05	0.65	-0.11	2	2	50
		Dischg	D	3.37	0.11	0.09	6	-6	-31
	Reboiler	Inlet	D	0.14	-4.86	0.09	-2	-6	-39
		Dischg	D	-0.62	-10.56	0.34	17	14	-247
	Separator	Inlet	D	0.20	-1.03	-0.38	-74	3	18
		Dischg	D	4.85	0.06	0.32	-1	-15	5
	Pump	Inlet	E	4.61	1.65	8.58	80	-167	34
		Dischg	E	2.62	15.60	2.17	318	-83	424
	Reboiler	Inlet	E	19.05	3.52	4.38	157	-63	79
		Dischg	E	8.79	7.06	1.86	112	-101	499
	Separator	Inlet	E	8.33	4.33	1.71	118	-57	163
		Dischg	E	5.33	3.44	24.43	102	-771	323
	Pump	Inlet	T	-2.01	-2.32	-2.75	103	-64	-19
		Dischg	T	0.22	2.75	-0.09	-6	10	82
	Reboiler	Inlet	T	2.75	0.23	-0.09	6	6	-13
		Dischg	T	-0.91	-0.82	1.30	71	4	15
	Separator	Inlet	T	-0.89	-0.16	-1.85	32	75	-10
		Dischg	T	-1.14	0.58	1.18	20	-7	74
Case 8j	Pump	Inlet	D	-0.04	0.65	-0.10	2	1	50
		Dischg	D	3.38	0.16	0.10	8	-6	-30
	Reboiler	Inlet	D	0.18	-4.85	0.10	-1	-6	-38
		Dischg	D	-0.61	-10.56	0.34	17	14	-247
	Separator	Inlet	D	0.20	-1.03	-0.38	-74	3	18
		Dischg	D	4.85	0.05	0.32	-1	-15	4
	Pump	Inlet	E	4.08	1.20	6.81	33	-154	32
		Dischg	E	1.02	5.15	1.74	217	-62	142
	Reboiler	Inlet	E	2.53	1.61	3.43	103	-50	42
		Dischg	E	7.91	6.83	2.15	101	-94	450
	Separator	Inlet	E	7.99	4.06	1.63	108	-58	155
		Dischg	E	5.21	1.63	24.65	102	-776	135
	Pump	Inlet	T	-3.14	-1.64	-5.76	56	-31	-14
		Dischg	T	-2.24	-12.28	0.29	37	14	-321
	Reboiler	Inlet	T	-12.27	-2.30	0.29	28	-2	-66
		Dischg	T	-0.99	-0.91	1.44	79	6	14
	Separator	Inlet	T	-0.91	-0.23	-1.87	37	75	-12
		Dischg	T	-1.39	1.72	1.85	26	4	182

Notes: P is axial, positive is tension. V3 is horizontal
V2 has an upward sense, unless P is vertical. Then V2 follows X (east)
M2 & M3 axes follow V2 and V3.
M2 has the sign reversed relative to the SAP2000 local system so all systems are right handed.
M2 reversal reverses the sign of the positive seismic amplitude.

BY: E.O. Weiner
DATE: 6/15/06

SUBJECT: PT TLP Coupled Structural Analysis for Evaluation of Nozzle Loads

Nozzle Loads

Case	Location		Load	Kip P	Kip V2	Kip V3	in-Kip T	in-Kip M2	in-Kip M3
Case 8k	Pump	Inlet	D	0.01	0.65	-0.09	2	3	50
		Dischg	D	3.37	0.09	0.11	8	-6	-31
	Reboiler	Inlet	D	0.12	-4.86	0.11	-1	-6	-39
		Dischg	D	-0.61	-10.56	0.34	17	14	-247
	Separator	Inlet	D	0.20	-1.03	-0.38	-75	3	18
		Dischg	D	4.81	0.06	-0.19	-1	17	5
	Pump	Inlet	E	2.08	2.14	10.63	94	-120	43
		Dischg	E	3.20	19.55	2.16	305	-91	531
	Reboiler	Inlet	E	24.01	4.25	4.49	152	-57	92
		Dischg	E	8.87	7.19	2.24	114	-104	506
	Separator	Inlet	E	8.39	4.33	1.73	118	-43	157
		Dischg	E	3.86	4.15	9.42	102	-938	385
	Pump	Inlet	T	1.06	-2.19	-2.33	108	22	-9
		Dischg	T	0.14	2.33	0.61	70	18	71
	Reboiler	Inlet	T	2.33	0.15	0.61	45	-11	-15
		Dischg	T	-0.87	-0.80	1.28	70	4	14
	Separator	Inlet	T	-0.80	-0.18	-1.65	25	64	-12
		Dischg	T	-4.18	0.60	-12.15	17	1065	74
Case 8L	Pump	Inlet	D	0.02	0.65	-0.07	2	3	50
		Dischg	D	3.38	0.15	0.11	9	-6	-30
	Reboiler	Inlet	D	0.18	-4.85	0.11	-1	-7	-38
		Dischg	D	-0.61	-10.56	0.34	17	14	-247
	Separator	Inlet	D	0.20	-1.03	-0.38	-75	3	18
		Dischg	D	4.81	0.05	-0.18	-1	16	4
	Pump	Inlet	E	2.01	1.88	10.27	35	-134	55
		Dischg	E	1.08	5.71	1.82	254	-75	158
	Reboiler	Inlet	E	3.62	1.73	3.96	120	-56	42
		Dischg	E	7.89	6.85	2.45	103	-95	450
	Separator	Inlet	E	8.01	4.03	1.68	107	-45	149
		Dischg	E	3.84	2.07	8.08	106	-840	117
	Pump	Inlet	T	0.00	-1.55	-5.23	62	60	-5
		Dischg	T	-2.27	-12.39	0.92	104	20	-324
	Reboiler	Inlet	T	-12.38	-2.33	0.92	61	-18	-68
		Dischg	T	-0.94	-0.88	1.42	78	6	13
	Separator	Inlet	T	-0.81	-0.25	-1.66	30	64	-15
		Dischg	T	-4.37	1.73	-13.09	23	1149	180

Notes: P is axial, positive is tension. V3 is horizontal
V2 has an upward sense, unless P is vertical. Then V2 follows X (east)
M2 & M3 axes follow V2 and V3.
M2 has the sign reversed relative to the SAP2000 local system so all systems are right handed.
M2 reversal reverses the sign of the positive seismic amplitude.

BY: E.O. Weiner
DATE: 6/15/06

SUBJECT: PT TLP Coupled Structural Analysis for Evaluation of Nozzle Loads

Nozzle Loads

Case	Location		Load	Kip P	Kip V2	Kip V3	in-Kip T	in-Kip M2	in-Kip M3
Case 8o	Pump	Inlet	D	-0.10	0.66	-0.25	2	3	50
		Dischg	D	3.82	0.25	0.11	8	-6	-34
	Reboiler	Inlet	D	0.27	-4.41	0.11	-1	-7	12
		Dischg	D	-0.01	-0.49	0.36	-4	-14	12
	Separator	Inlet	D	0.96	-1.61	-0.22	-46	1	6
		Dischg	D	4.83	0.10	0.34	0	-14	9
	Pump	Inlet	E	4.61	1.65	8.58	80	-167	34
		Dischg	E	2.62	15.60	2.17	318	-83	424
	Reboiler	Inlet	E	19.05	3.52	4.38	157	-63	79
		Dischg	E	8.79	7.06	1.86	112	-101	499
	Separator	Inlet	E	8.33	4.33	1.71	118	-57	163
		Dischg	E	5.33	3.44	24.43	102	-771	323
	Pump	Inlet	T	-1.45	-2.62	-2.02	98	-45	-36
		Dischg	T	0.26	2.02	-0.05	-3	12	57
	Reboiler	Inlet	T	2.02	0.27	-0.05	9	5	2
		Dischg	T	-0.71	-0.71	1.09	61	9	-1
	Separator	Inlet	T	-0.32	-0.68	-1.28	43	57	-67
		Dischg	T	0.03	0.29	0.83	24	25	53
Case 8p	Pump	Inlet	D	-0.05	0.65	-0.11	2	2	50
		Dischg	D	3.38	0.15	0.09	6	-6	-30
	Reboiler	Inlet	D	0.17	-4.85	0.09	-2	-6	-38
		Dischg	D	-0.61	-10.56	0.34	17	14	-247
	Separator	Inlet	D	0.20	-1.03	-0.38	-74	3	18
		Dischg	D	4.85	0.06	0.32	-1	-15	5
	Pump	Inlet	E	4.25	1.18	7.20	33	-148	30
		Dischg	E	1.00	4.50	1.99	273	-75	123
	Reboiler	Inlet	E	4.00	1.53	3.98	134	-57	44
		Dischg	E	8.02	6.89	2.09	103	-95	457
	Separator	Inlet	E	8.05	4.08	1.65	109	-58	155
		Dischg	E	5.28	1.90	24.72	101	-776	173
	Pump	Inlet	T	-1.32	-2.74	-1.67	106	-49	-37
		Dischg	T	0.57	3.83	-0.11	-9	11	106
	Reboiler	Inlet	T	3.83	0.59	-0.11	6	6	9
		Dischg	T	-0.70	-0.70	1.08	60	9	-1
	Separator	Inlet	T	-0.32	-0.67	-1.28	42	57	-67
		Dischg	T	0.07	0.15	0.75	24	24	41

Notes: P is axial, positive is tension. V3 is horizontal
V2 has an upward sense, unless P is vertical. Then V2 follows X (east)
M2 & M3 axes follow V2 and V3.
M2 has the sign reversed relative to the SAP2000 local system so all systems are right handed.
M2 reversal reverses the sign of the positive seismic amplitude.

BY: E.O. Weiner
DATE: 6/15/06

SUBJECT: PT TLP Coupled Structural Analysis for Evaluation of Nozzle Loads

Nozzle Loads

Case	Location		Load	Kip P	Kip V2	Kip V3	in-Kip T	in-Kip M2	in-Kip M3
Case 8q	Pump	Inlet	D	-0.05	0.65	-0.11	2	2	50
		Dischg	D	3.38	0.15	0.09	6	-6	-30
	Reboiler	Inlet	D	0.17	-4.85	0.09	-2	-6	-38
		Dischg	D	-0.61	-10.56	0.34	17	14	-247
	Separator	Inlet	D	0.20	-1.03	-0.38	-74	3	18
		Dischg	D	4.85	0.06	0.32	-1	-15	5
	Pump	Inlet	E	4.25	1.18	7.20	33	-148	30
		Dischg	E	1.00	4.50	1.99	273	-75	123
	Reboiler	Inlet	E	4.00	1.53	3.98	134	-57	44
		Dischg	E	8.02	6.89	2.09	103	-95	457
	Separator	Inlet	E	8.05	4.08	1.65	109	-58	155
		Dischg	E	5.28	1.90	24.72	101	-776	173
	Pump	Inlet	T	-1.70	-2.51	-2.66	90	-39	-35
		Dischg	T	-0.26	-1.28	0.05	9	13	-32
	Reboiler	Inlet	T	-1.28	-0.27	0.05	15	3	-9
		Dischg	T	-0.73	-0.73	1.13	63	9	-1
	Separator	Inlet	T	-0.32	-0.69	-1.29	44	57	-68
		Dischg	T	-0.02	0.53	0.98	26	27	76
Case 8r	Pump	Inlet	D	-0.05	0.65	-0.11	2	2	50
		Dischg	D	3.38	0.15	0.09	6	-6	-30
	Reboiler	Inlet	D	0.17	-4.85	0.09	-2	-6	-38
		Dischg	D	-0.61	-10.56	0.34	17	14	-247
	Separator	Inlet	D	0.20	-1.03	-0.38	-74	3	18
		Dischg	D	4.85	0.06	0.32	-1	-15	5
	Pump	Inlet	E	4.25	1.18	7.20	33	-148	30
		Dischg	E	1.00	4.50	1.99	273	-75	123
	Reboiler	Inlet	E	4.00	1.53	3.98	134	-57	44
		Dischg	E	8.02	6.89	2.09	103	-95	457
	Separator	Inlet	E	8.05	4.08	1.65	109	-58	155
		Dischg	E	5.28	1.90	24.72	101	-776	173
	Pump	Inlet	T	-1.89	-2.39	-3.16	82	-34	-35
		Dischg	T	-0.68	-3.84	0.13	18	14	-101
	Reboiler	Inlet	T	-3.83	-0.70	0.13	20	1	-18
		Dischg	T	-0.74	-0.75	1.15	65	10	-2
	Separator	Inlet	T	-0.33	-0.70	-1.29	45	57	-68
		Dischg	T	-0.06	0.72	1.09	27	29	94

Notes: P is axial, positive is tension. V3 is horizontal
V2 has an upward sense, unless P is vertical. Then V2 follows X (east)
M2 & M3 axes follow V2 and V3.
M2 has the sign reversed relative to the SAP2000 local system so all systems are right handed.
M2 reversal reverses the sign of the positive seismic amplitude.

BY: E.O. Weiner
DATE: 6/15/06

SUBJECT: PT TLP Coupled Structural Analysis for Evaluation of Nozzle Loads

Nozzle Loads

Case	Location		Load	Kip P	Kip V2	Kip V3	in-Kip T	in-Kip M2	in-Kip M3
Case 8s	Pump	Inlet	D	-0.07	0.64	-0.16	4	2	50
		Dischg	D	3.89	0.67	0.10	7	-6	-23
	Reboiler	Inlet	D	0.70	-4.33	0.10	-1	-7	14
		Dischg	D	-0.01	-0.49	0.36	-4	-14	12
	Separator	Inlet	D	0.96	-1.61	-0.22	-46	1	6
		Dischg	D	4.84	0.07	0.32	0	-14	6
	Pump	Inlet	E	4.19	1.17	6.57	32	-143	30
		Dischg	E	0.98	4.30	1.93	255	-70	118
	Reboiler	Inlet	E	3.68	1.50	3.77	125	-54	43
		Dischg	E	7.60	6.79	2.08	98	-91	434
	Separator	Inlet	E	7.77	3.93	1.61	104	-57	152
		Dischg	E	5.24	1.77	24.71	98	-774	163
	Pump	Inlet	T	-1.89	-2.39	-3.16	82	-34	-35
		Dischg	T	-0.68	-3.84	0.13	18	14	-101
	Reboiler	Inlet	T	-3.83	-0.70	0.13	20	1	-18
		Dischg	T	-0.74	-0.75	1.15	65	10	-2
	Separator	Inlet	T	-0.33	-0.70	-1.29	45	57	-68
		Dischg	T	-0.06	0.72	1.09	27	29	94

Notes: P is axial, positive is tension. V3 is horizontal
V2 has an upward sense, unless P is vertical. Then V2 follows X (east)
M2 & M3 axes follow V2 and V3.
M2 has the sign reversed relative to the SAP2000 local system so all systems are right handed.
M2 reversal reverses the sign of the positive seismic amplitude.

BY: E.O. Weiner
DATE: 6/15/06

SUBJECT: PT TLP Coupled Structural Analysis for Evaluation of Nozzle Loads

Pump Support Gap Closure Loads

Case	in Gap	Load	Kip P	Remark
Case 8p	1/8	D	0.04	
		E	8.74	Seismic amplitude
		T	2.16	Tension, gap did not close
Case 8q	1/16	D	0.04	
		E	8.74	Seismic amplitude, exceeds thermal compression and suggests opening during seismic event
		T	-3.94	Compression, gap closed
Case 8r	1/32	D	0.04	
		E	8.74	Seismic amplitude, exceeds thermal compression and suggests opening during seismic event
		T	-6.99	Compression, gap closed
Case 8s	1/32	D	0.51	
		E	8.08	Seismic amplitude, exceeds thermal compression and suggests opening during seismic event
		T	-7.00	Compression, gap closed

BY: E.O. Weiner
DATE: 6/15/06

SUBJECT: PT TLP Coupled Structural Analysis for Evaluation of Nozzle Loads

Mid-Elbow Loads

Case	Location		Load	Kip P	Kip V2	Kip V3	in-Kip T	in-Kip M2	in-Kip M3
Case 8a	Pump	Inlet	D	-0.05	0.01	-1.74	24	8	1
	Reboiler	Dischg	D	-7.40	6.57	0.56	30	3	-8
	Separator	Dischg	D	0.99	-0.98	-0.03	-2	0	16
	Pump	Inlet	E	2.42	3.28	1.16	8	2	17
	Reboiler	Dischg	E	4.24	7.47	7.83	349	217	288
	Separator	Dischg	E	5.76	4.23	0.34	3	5	40
	Pump	Inlet	T	-7.73	2.91	2.62	96	-39	128
	Reboiler	Dischg	T	-2.48	0.21	5.14	286	-134	42
	Separator	Dischg	T	-3.60	-1.27	-3.28	39	29	79
Case 8b	Pump	Inlet	D	0.03	0.00	-1.57	26	4	-1
	Reboiler	Dischg	D	-7.32	6.49	0.45	28	5	-4
	Separator	Dischg	D	1.04	-0.96	-0.02	-1	0	16
	Pump	Inlet	E	5.53	7.97	2.10	61	28	151
	Reboiler	Dischg	E	8.09	12.45	16.97	794	465	439
	Separator	Dischg	E	11.38	7.85	5.80	75	88	73
	Pump	Inlet	T	-2.55	0.14	2.45	86	-27	118
	Reboiler	Dischg	T	-2.32	0.20	4.74	263	-122	40
	Separator	Dischg	T	-1.83	-0.61	-0.41	28	3	29
Case 8c	Pump	Inlet	D	0.01	0.01	-1.58	26	4	-1
	Reboiler	Dischg	D	-7.29	6.34	0.37	28	5	13
	Separator	Dischg	D	1.02	-0.96	-0.03	-1	0	16
	Pump	Inlet	E	26.06	13.94	1.77	87	38	383
	Reboiler	Dischg	E	11.80	10.80	35.29	1895	975	368
	Separator	Dischg	E	20.84	14.10	9.62	109	171	139
	Pump	Inlet	T	-1.35	-0.23	2.34	82	-24	98
	Reboiler	Dischg	T	-1.36	-0.01	1.75	92	-28	28
	Separator	Dischg	T	-1.34	-0.27	-0.06	24	-1	27
Case 8d	Pump	Inlet	D	-0.11	0.05	-1.58	26	4	1
	Reboiler	Dischg	D	-7.29	6.34	0.37	28	5	13
	Separator	Dischg	D	0.97	-0.99	-0.06	-1	1	17
	Pump	Inlet	E	4.48	7.30	1.80	69	29	116
	Reboiler	Dischg	E	10.34	9.64	30.44	1638	839	326
	Separator	Dischg	E	12.42	8.95	3.79	67	74	71
	Pump	Inlet	T	-3.37	0.52	2.32	85	-26	115
	Reboiler	Dischg	T	-1.35	-0.01	1.73	92	-27	28
	Separator	Dischg	T	-2.12	-0.76	-0.58	28	7	32

Notes Results are at the center of each elbow listed nearest the nozzle listed.
Forces & moments are in the SAP2000 frame local coordinate system.
The user-specified local system for elbows have the 2-axis pointing to the center of the elbow run.
M2 is out-of-plane bending. M3 is in-plane bending. Positive P is tension.

BY: E.O. Weiner
DATE: 6/15/06

SUBJECT: PT TLP Coupled Structural Analysis for Evaluation of Nozzle Loads

Mid-Elbow Loads

Case	Location		Load	Kip P	Kip V2	Kip V3	in-Kip T	in-Kip M2	in-Kip M3
Case 8e	Pump	Inlet	D	-0.05	0.01	-1.74	24	8	1
	Reboiler	Dischg	D	-7.35	6.40	0.40	26	6	10
	Separator	Dischg	D	0.98	-0.97	-0.03	-2	1	17
	Pump	Inlet	E	2.52	3.32	1.16	8	2	17
	Reboiler	Dischg	E	8.13	7.80	26.82	1439	756	285
	Separator	Dischg	E	5.78	4.24	0.32	4	6	40
	Pump	Inlet	T	-7.56	2.79	2.67	97	-39	128
	Reboiler	Dischg	T	-1.40	-0.01	1.79	95	-28	28
	Separator	Dischg	T	-3.55	-1.28	-2.59	44	36	77
Case 8f	Pump	Inlet	D	-0.13	0.05	-0.71	12	6	1
	Reboiler	Dischg	D	-3.91	3.39	0.25	17	-1	13
	Separator	Dischg	D	0.81	-0.85	-0.11	-5	2	17
	Pump	Inlet	E	2.96	3.95	1.32	55	25	96
	Reboiler	Dischg	E	6.13	4.79	17.90	995	516	183
	Separator	Dischg	E	8.83	6.56	3.12	65	65	46
	Pump	Inlet	T	-3.37	0.52	2.32	85	-26	115
	Reboiler	Dischg	T	-1.35	-0.01	1.73	92	-27	28
	Separator	Dischg	T	-2.12	-0.76	-0.58	28	7	32
Case 8i	Pump	Inlet	D	-0.11	0.05	-1.58	26	4	1
	Reboiler	Dischg	D	-7.28	6.33	0.34	26	6	13
	Separator	Dischg	D	0.97	-0.99	-0.06	-1	1	17
	Pump	Inlet	E	4.52	7.33	1.57	67	28	117
	Reboiler	Dischg	E	5.89	9.26	1.42	152	25	306
	Separator	Dischg	E	12.75	9.19	3.79	67	74	72
	Pump	Inlet	T	-3.37	0.52	2.32	85	-26	115
	Reboiler	Dischg	T	-1.22	-0.07	1.30	67	-14	26
	Separator	Dischg	T	-2.12	-0.76	-0.58	29	7	32
Case 8j	Pump	Inlet	D	-0.10	0.04	-1.58	26	4	1
	Reboiler	Dischg	D	-7.28	6.33	0.34	26	6	13
	Separator	Dischg	D	0.97	-0.99	-0.05	-1	1	17
	Pump	Inlet	E	4.37	5.85	1.10	30	12	93
	Reboiler	Dischg	E	5.64	8.43	1.70	137	26	276
	Separator	Dischg	E	12.37	8.95	2.41	66	55	67
	Pump	Inlet	T	-6.30	1.85	1.64	47	-7	149
	Reboiler	Dischg	T	-1.34	-0.06	1.44	76	-15	27
	Separator	Dischg	T	-3.02	-1.46	-1.72	34	27	39

Notes Results are at the center of each elbow listed nearest the nozzle listed.
Forces & moments are in the SAP2000 frame local coordinate system.
The user-specified local system for elbows have the 2-axis pointing to the center of the elbow run.
M2 is out-of-plane bending. M3 is in-plane bending. Positive P is tension.

BY: E.O. Weiner
DATE: 6/15/06

SUBJECT: PT TLP Coupled Structural Analysis for Evaluation of Nozzle Loads

Mid-Elbow Loads

Case	Location		Load	Kip P	Kip V2	Kip V3	in-Kip T	in-Kip M2	in-Kip M3
Case 8k	Pump	Inlet	D	-0.06	0.07	-1.58	26	4	-1
	Reboiler	Dischg	D	-7.28	6.33	0.34	26	6	13
	Separator	Dischg	D	0.83	-1.05	-0.06	-1	1	19
	Pump	Inlet	E	6.21	7.16	1.99	75	35	163
	Reboiler	Dischg	E	5.96	9.38	1.80	153	26	310
	Separator	Dischg	E	9.55	6.02	4.28	67	83	113
	Pump	Inlet	T	-0.89	2.40	2.19	94	-25	51
	Reboiler	Dischg	T	-1.18	-0.06	1.28	67	-13	25
	Separator	Dischg	T	-11.40	-5.92	-0.60	24	8	159
Case 8L	Pump	Inlet	D	-0.04	0.06	-1.58	26	4	-1
	Reboiler	Dischg	D	-7.28	6.33	0.34	26	6	13
	Separator	Dischg	D	0.84	-1.05	-0.05	-1	1	19
	Pump	Inlet	E	6.32	7.28	1.64	35	16	142
	Reboiler	Dischg	E	5.65	8.42	2.00	137	27	276
	Separator	Dischg	E	8.94	5.61	1.88	69	66	100
	Pump	Inlet	T	-3.70	3.70	1.55	58	-7	78
	Reboiler	Dischg	T	-1.29	-0.05	1.42	75	-14	26
	Separator	Dischg	T	-12.18	-6.47	-1.73	29	28	170
Case 8o	Pump	Inlet	D	-0.25	0.10	-1.59	26	4	3
	Reboiler	Dischg	D	0.30	-0.32	0.36	-9	2	13
	Separator	Dischg	D	0.92	-1.02	-0.10	0	2	17
	Pump	Inlet	E	4.52	7.33	1.57	67	28	117
	Reboiler	Dischg	E	5.89	9.26	1.42	152	25	306
	Separator	Dischg	E	12.75	9.19	3.79	67	74	72
	Pump	Inlet	T	-2.46	0.40	2.62	73	-27	83
	Reboiler	Dischg	T	-1.00	0.00	1.09	62	-9	10
	Separator	Dischg	T	-0.91	-1.14	-0.29	36	2	3
Case 8p	Pump	Inlet	D	-0.11	0.04	-1.58	26	4	1
	Reboiler	Dischg	D	-7.28	6.33	0.34	26	6	13
	Separator	Dischg	D	0.97	-0.99	-0.06	-1	1	17
	Pump	Inlet	E	4.41	6.20	1.05	30	10	102
	Reboiler	Dischg	E	5.69	8.54	1.62	139	26	280
	Separator	Dischg	E	12.77	9.20	2.67	66	57	71
	Pump	Inlet	T	-2.12	0.25	2.74	79	-29	79
	Reboiler	Dischg	T	-0.99	0.00	1.08	61	-9	10
	Separator	Dischg	T	-0.80	-1.06	-0.15	36	-1	2

Notes Results are at the center of each elbow listed nearest the nozzle listed.
Forces & moments are in the SAP2000 frame local coordinate system.
The user-specified local system for elbows have the 2-axis pointing to the center of the elbow run.
M2 is out-of-plane bending. M3 is in-plane bending. Positive P is tension.

BY: E.O. Weiner
DATE: 6/15/06

SUBJECT: PT TLP Coupled Structural Analysis for Evaluation of Nozzle Loads

Mid-Elbow Loads

Case	Location		Load	Kip P	Kip V2	Kip V3	in-Kip T	in-Kip M2	in-Kip M3
Case 8q	Pump	Inlet	D	-0.11	0.04	-1.58	26	4	1
	Reboiler	Dischg	D	-7.28	6.33	0.34	26	6	13
	Separator	Dischg	D	0.97	-0.99	-0.06	-1	1	17
	Pump	Inlet	E	4.41	6.20	1.05	30	10	102
	Reboiler	Dischg	E	5.69	8.54	1.62	139	26	280
	Separator	Dischg	E	12.77	9.20	2.67	66	57	71
	Pump	Inlet	T	-3.09	0.68	2.51	66	-23	91
	Reboiler	Dischg	T	-1.03	0.00	1.13	64	-9	10
	Separator	Dischg	T	-1.11	-1.30	-0.53	37	6	4
Case 8r	Pump	Inlet	D	-0.11	0.04	-1.58	26	4	1
	Reboiler	Dischg	D	-7.28	6.33	0.34	26	6	13
	Separator	Dischg	D	0.97	-0.99	-0.06	-1	1	17
	Pump	Inlet	E	4.41	6.20	1.05	30	10	102
	Reboiler	Dischg	E	5.69	8.54	1.62	139	26	280
	Separator	Dischg	E	12.77	9.20	2.67	66	57	71
	Pump	Inlet	T	-3.57	0.89	2.39	60	-20	97
	Reboiler	Dischg	T	-1.05	0.00	1.15	65	-9	10
	Separator	Dischg	T	-1.26	-1.41	-0.72	38	9	6
Case 8s	Pump	Inlet	D	-0.16	0.07	-1.57	27	4	2
	Reboiler	Dischg	D	0.30	-0.32	0.36	-9	3	13
	Separator	Dischg	D	0.95	-1.00	-0.07	-1	1	17
	Pump	Inlet	E	4.13	5.79	1.05	29	10	94
	Reboiler	Dischg	E	5.56	8.17	1.61	132	26	265
	Separator	Dischg	E	12.64	9.12	2.58	64	54	70
	Pump	Inlet	T	-3.57	0.89	2.39	60	-20	97
	Reboiler	Dischg	T	-1.05	0.00	1.15	65	-9	10
	Separator	Dischg	T	-1.26	-1.41	-0.72	38	9	6

Notes Results are at the center of each elbow listed nearest the nozzle listed.
Forces & moments are in the SAP2000 frame local coordinate system.
The user-specified local system for elbows have the 2-axis pointing to the center of the elbow run.
M2 is out-of-plane bending. M3 is in-plane bending. Positive P is tension.

BY: E.O. Weiner
DATE: 6/15/06

SUBJECT: PT TLP Coupled Structural Analysis for Evaluation of Nozzle Loads

RGM vs Pre-RGM Nozzle Loads

			RGM - Case 8d				Pre-RGM - Case 8h			
			Kip	Kip	in-Kip	in-Kip	Kip	Kip	in-Kip	in-Kip
Nozzle		Load	P	V	T	M	P	V	T	M
Pump	Inlet	D	-0.05	0.66	2	50	-0.05	0.66	2	50
	Dischg	D	3.37	0.15	6	31	3.37	0.15	6	31
Reboiler	Inlet	D	0.14	4.86	-2	39	0.14	4.86	-2	39
	Dischg	D	-0.62	10.58	20	248	-0.62	10.58	20	248
Separator	Inlet	D	0.21	1.10	-74	18	0.21	1.10	-74	18
	Dischg	D	4.85	0.32	-1	16	4.85	0.32	-1	16
Pump	Inlet	E	4.53	8.79	80	172	4.06	7.87	71	152
	Dischg	E	2.68	15.75	316	432	2.35	14.15	286	388
Reboiler	Inlet	E	19.04	5.66	157	117	17.13	5.05	142	102
	Dischg	E	9.60	32.45	2074	558	7.80	27.02	1725	455
Separator	Inlet	E	11.03	12.47	206	523	9.90	10.46	172	437
	Dischg	E	5.22	24.13	102	829	4.53	21.32	105	729
Pump	Inlet	T	-2.01	3.60	103	67	-2.01	3.60	103	67
	Dischg	T	0.21	2.75	-6	83	0.21	2.75	-6	83
Reboiler	Inlet	T	2.75	0.25	6	15	2.75	0.25	6	15
	Dischg	T	-0.96	1.97	103	13	-0.96	1.97	103	13
Separator	Inlet	T	-0.81	1.75	35	70	-0.81	1.75	35	70
	Dischg	T	-1.14	1.28	20	74	-1.14	1.28	20	74

BY: E.O. Weiner
DATE: 6/15/06

SUBJECT: PT TLP Coupled Structural Analysis for Evaluation of Nozzle Loads

Drift Nozzle Loads (Case 8d)

Nozzle		Load	Kip P	Kip V	in-Kip T	in-Kip M
Pump	Inlet	E	4.53	8.79	80	172
	Dischg	E	2.68	15.75	316	432
Reboiler	Inlet	E	19.04	5.66	157	117
	Dischg	E	9.60	32.45	2074	558
Separator	Inlet	E	11.03	12.47	206	523
	Dischg	E	5.22	24.13	102	829
Pump	Inlet	Dr	0.40	1.06	-23	10
	Dischg	Dr	-0.13	0.85	-9	24
Reboiler	Inlet	Dr	-0.85	0.15	-6	3
	Dischg	Dr	0.16	0.24	-15	6
Separator	Inlet	Dr	-0.01	0.30	10	30
	Dischg	Dr	0.12	4.94	-19	251

Frame Base Reactions

Case	Base	Loc	Load	Kip FX	Kip FY	Kip FZ	Kip-ft MX	Kip-ft MY	Kip-ft MZ
Case 8g	Pump Frame	Bottom	E	3	6	8	61	57	12
	Reboiler Frame	Bottom	E	25	38	23	280	141	125
	Separator Frame	Bottom	E	133	153	67	4220	3841	80
Case 8d	Pump Frame	Bottom	Dr	0	0	-1	2	-2	2
	Reboiler Frame	Bottom	Dr	-1	0	0	1	-2	-1
	Separator Frame	Bottom	Dr	-10	-23	0	1236	-475	-3
	Separator Frame	Top	Dr	9	24	0	0	0	-1
	Pump Frame	Bottom	E	4	7	8	66	56	12
	Reboiler Frame	Bottom	E	24	36	21	261	142	115
	Separator Frame	Bottom	E	61	100	65	2007	1011	47
	Separator Frame	Top	E	32	47	1	0	1	41

Notes: Case 8g is Case 8d with top support removed from separator.
Frame bases constrained to single joint for reactions.
Components are global.

BY: E.O. Weiner
DATE: 6/15/06

SUBJECT: PT TLP Coupled Structural Analysis for Evaluation of Nozzle Loads

Nozzle Displacements

Case	Location		Load	in U1	in U2	in U3	deg R1	deg R2	deg R3
Case 8a	Pump	Inlet	D	0.0006	0.0000	-0.0011	0.0000	-0.0012	0.0000
		Dischg	D	0.0010	0.0000	-0.0011	0.0000	-0.0012	0.0000
	Reboiler	Inlet	D	0.0000	-0.0089	-0.0126	-0.0018	0.0001	-0.0001
		Dischg	D	0.0000	-0.0090	-0.0128	-0.0018	0.0001	-0.0001
	Separator	Inlet	D	0.0000	0.0000	-0.0297	0.0000	0.0000	0.0000
		Dischg	D	0.0000	0.0000	-0.0297	0.0000	0.0000	0.0000
	Pump	Inlet	E	0.0178	0.0217	0.0006	0.0005	0.0034	0.0238
		Dischg	E	0.0093	0.0215	0.0005	0.0005	0.0034	0.0238
	Reboiler	Inlet	E	0.0420	0.0245	0.0072	0.0020	0.0071	0.0015
		Dischg	E	0.0420	0.0250	0.0072	0.0020	0.0071	0.0015
	Separator	Inlet	E	0.0710	0.1839	0.0178	0.0229	0.0120	0.0003
		Dischg	E	0.0751	0.1879	0.0167	0.0229	0.0120	0.0003
	Pump	Inlet	T	0.0006	0.0252	0.0402	0.0000	-0.0001	0.0000
		Dischg	T	0.0007	0.0000	0.0238	0.0000	-0.0001	0.0000
	Reboiler	Inlet	T	-0.0296	-0.0036	-0.0020	0.0038	0.0000	0.0000
		Dischg	T	0.0296	-0.0036	-0.0020	0.0038	0.0000	0.0000
	Separator	Inlet	T	0.0221	0.0001	0.0714	0.0000	0.0000	0.0000
		Dischg	T	0.0000	0.0000	0.0506	0.0000	0.0000	0.0000
Case 8b	Pump	Inlet	D	0.0013	-0.0090	0.0007	0.0041	-0.0005	0.0004
		Dischg	D	0.0016	-0.0083	-0.0014	0.0018	0.0001	0.0003
	Reboiler	Inlet	D	-0.0031	-0.0106	-0.0136	-0.0021	0.0046	-0.0011
		Dischg	D	-0.0031	-0.0122	-0.0212	-0.0021	0.0060	-0.0011
	Separator	Inlet	D	-0.0002	0.0002	-0.0313	-0.0001	0.0000	0.0002
		Dischg	D	-0.0002	0.0001	-0.0313	-0.0001	0.0000	0.0002
	Pump	Inlet	E	0.2014	0.4905	0.0169	0.0249	0.0244	0.2407
		Dischg	E	0.1085	0.4751	0.0028	0.0379	0.0413	0.2425
	Reboiler	Inlet	E	0.0593	0.0769	0.0127	0.0057	0.0129	0.0572
		Dischg	E	0.0592	0.0418	0.0135	0.0069	0.0138	0.0527
	Separator	Inlet	E	0.0759	0.1572	0.0175	0.0204	0.0128	0.0092
		Dischg	E	0.0806	0.1557	0.0159	0.0201	0.0128	0.0087
	Pump	Inlet	T	-0.1541	-0.0214	0.0380	-0.0029	0.0046	0.0190
		Dischg	T	-0.1404	-0.0467	0.0226	0.0014	-0.0026	0.0215
	Reboiler	Inlet	T	-0.0355	-0.0109	-0.0026	0.0041	0.0011	0.0013
		Dischg	T	0.0252	-0.0098	-0.0043	0.0049	0.0012	0.0006
	Separator	Inlet	T	0.0227	0.0113	0.0713	0.0015	0.0001	0.0013
		Dischg	T	-0.0003	0.0112	0.0499	0.0014	0.0001	0.0012

Notes
1. Displacement components are global: 1 = East 2 = North 3 = Up
2. Case 8a seismic displacements are from the frame/vessel model analysis. Seismic anchor movements were input to the piping model as zero.

BY: E.O. Weiner
DATE: 6/15/06

SUBJECT: PT TLP Coupled Structural Analysis for Evaluation of Nozzle Loads

Nozzle Displacements

Case	Location		Load	in U1	in U2	in U3	deg R1	deg R2	deg R3
Case 8c	Pump	Inlet	D	0.0018	-0.0087	0.0007	0.0042	-0.0004	0.0006
		Dischg	D	0.0021	-0.0079	-0.0015	0.0018	0.0003	0.0005
	Reboiler	Inlet	D	-0.0035	-0.0105	-0.0129	-0.0021	0.0054	-0.0011
		Dischg	D	-0.0035	-0.0120	-0.0215	-0.0020	0.0066	-0.0011
	Separator	Inlet	D	-0.0004	0.0002	-0.0314	-0.0001	0.0001	0.0001
		Dischg	D	-0.0005	0.0001	-0.0313	-0.0001	0.0001	0.0001
	Pump	Inlet	E	0.2583	2.0886	0.0180	0.0222	0.0459	0.5562
		Dischg	E	0.2316	2.0768	0.0049	0.0261	0.0807	0.6103
	Reboiler	Inlet	E	0.0776	0.0748	0.0198	0.0074	0.0210	0.0568
		Dischg	E	0.0771	0.0679	0.0189	0.0130	0.0213	0.0547
	Separator	Inlet	E	0.0842	0.1997	0.0198	0.0210	0.0138	0.0028
		Dischg	E	0.0895	0.2027	0.0183	0.0209	0.0138	0.0028
	Pump	Inlet	T	-0.1559	-0.1031	0.0375	-0.0040	0.0058	0.0332
		Dischg	T	-0.1346	-0.1293	0.0227	-0.0009	0.0000	0.0379
	Reboiler	Inlet	T	-0.0329	-0.0075	-0.0023	0.0038	0.0004	0.0013
		Dischg	T	0.0277	-0.0060	-0.0031	0.0040	0.0005	0.0010
	Separator	Inlet	T	0.0219	0.0049	0.0716	0.0006	0.0002	0.0002
		Dischg	T	-0.0011	0.0049	0.0502	0.0006	0.0002	0.0002
Case 8d	Pump	Inlet	D	0.0020	-0.0006	0.0006	0.0041	-0.0006	-0.0013
		Dischg	D	0.0014	0.0001	-0.0015	0.0017	0.0001	-0.0016
	Reboiler	Inlet	D	-0.0037	-0.0102	-0.0128	-0.0021	0.0054	-0.0013
		Dischg	D	-0.0037	-0.0120	-0.0215	-0.0020	0.0067	-0.0012
	Separator	Inlet	D	-0.0004	0.0003	-0.0314	-0.0001	0.0001	0.0001
		Dischg	D	-0.0005	0.0001	-0.0313	-0.0001	0.0001	0.0001
	Pump	Inlet	E	0.1957	0.0551	0.0057	0.0070	0.0227	0.1026
		Dischg	E	0.1292	0.0555	0.0028	0.0057	0.0411	0.0820
	Reboiler	Inlet	E	0.0534	0.0302	0.0088	0.0067	0.0133	0.0306
		Dischg	E	0.0532	0.0600	0.0168	0.0116	0.0141	0.0324
	Separator	Inlet	E	0.0751	0.1859	0.0174	0.0206	0.0127	0.0020
		Dischg	E	0.0798	0.1882	0.0160	0.0205	0.0127	0.0019
	Pump	Inlet	T	-0.1479	0.0187	0.0363	-0.0055	0.0033	-0.0031
		Dischg	T	-0.1470	-0.0083	0.0224	-0.0030	-0.0045	-0.0023
	Reboiler	Inlet	T	-0.0361	-0.0044	-0.0013	0.0038	0.0016	-0.0015
		Dischg	T	0.0246	-0.0066	-0.0036	0.0041	0.0016	-0.0016
	Separator	Inlet	T	0.0221	0.0056	0.0717	0.0007	0.0001	0.0001
		Dischg	T	-0.0009	0.0058	0.0503	0.0007	0.0001	0.0000

Notes
1. Displacement components are global: 1 = East 2 = North 3 = Up

BY: E.O. Weiner
DATE: 6/15/06

SUBJECT: PT TLP Coupled Structural Analysis for Evaluation of Nozzle Loads

Nozzle Displacements

Case	Location		Load	in U1	in U2	in U3	deg R1	deg R2	deg R3
Case 8e	Pump	Inlet	D	0.0006	0.0000	-0.0011	0.0000	-0.0012	0.0000
		Dischg	D	0.0010	0.0000	-0.0011	0.0000	-0.0012	0.0000
	Reboiler	Inlet	D	0.0000	-0.0089	-0.0126	-0.0018	0.0001	-0.0001
		Dischg	D	0.0000	-0.0090	-0.0128	-0.0018	0.0001	-0.0001
	Separator	Inlet	D	0.0000	0.0000	-0.0297	0.0000	0.0000	0.0000
		Dischg	D	0.0000	0.0000	-0.0297	0.0000	0.0000	0.0000
	Pump	Inlet	E	0.0178	0.0217	0.0006	0.0005	0.0034	0.0238
		Dischg	E	0.0093	0.0215	0.0005	0.0005	0.0034	0.0238
	Reboiler	Inlet	E	0.0420	0.0245	0.0072	0.0020	0.0071	0.0015
		Dischg	E	0.0420	0.0250	0.0072	0.0020	0.0071	0.0015
	Separator	Inlet	E	0.0710	0.1839	0.0178	0.0229	0.0120	0.0003
		Dischg	E	0.0751	0.1879	0.0167	0.0229	0.0120	0.0003
	Pump	Inlet	T	0.0006	0.0252	0.0402	0.0000	-0.0001	0.0000
		Dischg	T	0.0007	0.0000	0.0238	0.0000	-0.0001	0.0000
	Reboiler	Inlet	T	-0.0296	-0.0036	-0.0020	0.0038	0.0000	0.0000
		Dischg	T	0.0296	-0.0036	-0.0020	0.0038	0.0000	0.0000
	Separator	Inlet	T	0.0221	0.0001	0.0714	0.0000	0.0000	0.0000
		Dischg	T	0.0000	0.0000	0.0506	0.0000	0.0000	0.0000
Case 8f	Pump	Inlet	D	0.0024	-0.0008	-0.0013	0.0007	-0.0009	-0.0009
		Dischg	D	0.0021	-0.0008	-0.0016	0.0000	-0.0002	-0.0013
	Reboiler	Inlet	D	-0.0023	-0.0093	-0.0122	-0.0019	0.0035	-0.0009
		Dischg	D	-0.0023	-0.0106	-0.0177	-0.0018	0.0042	-0.0009
	Separator	Inlet	D	-0.0003	0.0001	-0.0314	-0.0001	0.0001	0.0001
		Dischg	D	-0.0003	0.0000	-0.0314	-0.0001	0.0001	0.0001
	Pump	Inlet	E	0.1477	0.0420	0.0044	0.0045	0.0197	0.0640
		Dischg	E	0.1075	0.0427	0.0025	0.0043	0.0346	0.0524
	Reboiler	Inlet	E	0.0459	0.0247	0.0066	0.0045	0.0089	0.0181
		Dischg	E	0.0458	0.0393	0.0111	0.0074	0.0093	0.0191
	Separator	Inlet	E	0.0745	0.1808	0.0171	0.0204	0.0126	0.0014
		Dischg	E	0.0791	0.1831	0.0158	0.0202	0.0126	0.0013
	Pump	Inlet	T	-0.1479	0.0187	0.0363	-0.0055	0.0033	-0.0031
		Dischg	T	-0.1470	-0.0083	0.0224	-0.0030	-0.0045	-0.0023
	Reboiler	Inlet	T	-0.0361	-0.0044	-0.0013	0.0038	0.0016	-0.0015
		Dischg	T	0.0246	-0.0066	-0.0036	0.0041	0.0016	-0.0016
	Separator	Inlet	T	0.0221	0.0056	0.0717	0.0007	0.0001	0.0001
		Dischg	T	-0.0009	0.0058	0.0503	0.0007	0.0001	0.0000

Notes
1. Displacement components are global: 1 = East 2 = North 3 = Up
2. Case 8e seismic displacements are from the frame/vessel analysis. Seismic anchor movements were input to the piping model as zero.

BY: E.O. Weiner
DATE: 6/15/06

SUBJECT: PT TLP Coupled Structural Analysis for Evaluation of Nozzle Loads

Nozzle Displacements

Case	Location		Load	in U1	in U2	in U3	deg R1	deg R2	deg R3
Case 8i	Pump	Inlet	D	0.0020	-0.0006	0.0006	0.0041	-0.0006	-0.0012
		Dischg	D	0.0014	0.0001	-0.0015	0.0017	0.0001	-0.0016
	Reboiler	Inlet	D	-0.0037	-0.0102	-0.0128	-0.0021	0.0054	-0.0012
		Dischg	D	-0.0037	-0.0120	-0.0215	-0.0020	0.0067	-0.0012
	Separator	Inlet	D	-0.0004	0.0003	-0.0314	-0.0001	0.0001	0.0001
		Dischg	D	-0.0005	0.0002	-0.0313	-0.0001	0.0001	0.0001
	Pump	Inlet	E	0.1957	0.0556	0.0052	0.0056	0.0228	0.1032
		Dischg	E	0.1288	0.0561	0.0028	0.0050	0.0411	0.0824
	Reboiler	Inlet	E	0.0525	0.0304	0.0090	0.0042	0.0107	0.0064
		Dischg	E	0.0523	0.0295	0.0114	0.0043	0.0113	0.0062
	Separator	Inlet	E	0.0749	0.1902	0.0176	0.0206	0.0127	0.0008
		Dischg	E	0.0796	0.1927	0.0164	0.0205	0.0126	0.0008
	Pump	Inlet	T	-0.1478	0.0187	0.0363	-0.0055	0.0033	-0.0030
		Dischg	T	-0.1469	-0.0083	0.0224	-0.0030	-0.0045	-0.0022
	Reboiler	Inlet	T	-0.0360	-0.0043	-0.0013	0.0037	0.0014	-0.0011
		Dischg	T	0.0247	-0.0059	-0.0034	0.0039	0.0015	-0.0011
	Separator	Inlet	T	0.0221	0.0058	0.0717	0.0007	0.0001	0.0001
		Dischg	T	-0.0009	0.0060	0.0503	0.0007	0.0001	0.0001
Case 8j	Pump	Inlet	D	0.0015	-0.0005	0.0006	0.0040	-0.0006	-0.0009
		Dischg	D	0.0012	0.0001	-0.0015	0.0016	0.0000	-0.0013
	Reboiler	Inlet	D	-0.0037	-0.0102	-0.0128	-0.0021	0.0055	-0.0013
		Dischg	D	-0.0037	-0.0120	-0.0215	-0.0020	0.0067	-0.0012
	Separator	Inlet	D	-0.0004	0.0003	-0.0314	-0.0001	0.0001	0.0001
		Dischg	D	-0.0005	0.0002	-0.0313	-0.0001	0.0001	0.0001
	Pump	Inlet	E	0.0582	0.0437	0.0036	0.0057	0.0056	0.0698
		Dischg	E	0.0257	0.0452	0.0012	0.0058	0.0111	0.0541
	Reboiler	Inlet	E	0.0391	0.0301	0.0076	0.0043	0.0086	0.0049
		Dischg	E	0.0392	0.0301	0.0103	0.0043	0.0094	0.0048
	Separator	Inlet	E	0.0752	0.1924	0.0176	0.0207	0.0127	0.0007
		Dischg	E	0.0798	0.1951	0.0164	0.0206	0.0127	0.0007
	Pump	Inlet	T	-0.0512	0.0202	0.0405	-0.0041	0.0200	0.0133
		Dischg	T	-0.0537	-0.0065	0.0258	-0.0022	0.0287	0.0096
	Reboiler	Inlet	T	-0.0126	-0.0050	-0.0069	0.0036	-0.0054	-0.0003
		Dischg	T	0.0479	-0.0055	0.0006	0.0039	-0.0051	-0.0003
	Separator	Inlet	T	0.0225	0.0068	0.0719	0.0008	-0.0001	-0.0002
		Dischg	T	-0.0004	0.0071	0.0504	0.0008	-0.0001	-0.0002

Notes
1. Displacement components are global: 1 = East 2 = North 3 = Up

BY: E.O. Weiner
DATE: 6/15/06

SUBJECT: PT TLP Coupled Structural Analysis for Evaluation of Nozzle Loads

Nozzle Displacements

Case	Location		Load	in U1	in U2	in U3	deg R1	deg R2	deg R3
Case 8k	Pump	Inlet	D	0.0020	-0.0003	0.0006	0.0041	-0.0005	-0.0009
		Dischg	D	0.0016	0.0004	-0.0015	0.0017	0.0001	-0.0013
	Reboiler	Inlet	D	-0.0036	-0.0102	-0.0128	-0.0021	0.0054	-0.0013
		Dischg	D	-0.0036	-0.0120	-0.0215	-0.0020	0.0066	-0.0012
	Separator	Inlet	D	-0.0004	0.0010	-0.0314	0.0000	0.0001	0.0001
		Dischg	D	-0.0005	0.0010	-0.0313	0.0001	0.0001	0.0001
	Pump	Inlet	E	0.2337	0.0501	0.0067	0.0068	0.0289	0.1032
		Dischg	E	0.1620	0.0504	0.0036	0.0053	0.0518	0.0831
	Reboiler	Inlet	E	0.0655	0.0311	0.0104	0.0042	0.0126	0.0070
		Dischg	E	0.0652	0.0294	0.0121	0.0043	0.0131	0.0068
	Separator	Inlet	E	0.0747	0.1391	0.0174	0.0205	0.0126	0.0010
		Dischg	E	0.0794	0.1394	0.0161	0.0204	0.0126	0.0010
	Pump	Inlet	T	-0.1570	0.0335	0.0373	-0.0039	0.0042	0.0189
		Dischg	T	-0.1442	0.0066	0.0225	-0.0019	-0.0033	0.0144
	Reboiler	Inlet	T	-0.0353	-0.0030	-0.0013	0.0036	0.0013	-0.0020
		Dischg	T	0.0254	-0.0059	-0.0033	0.0039	0.0013	-0.0020
	Separator	Inlet	T	0.0218	0.0336	0.0725	0.0065	0.0001	0.0000
		Dischg	T	-0.0013	0.0370	0.0512	0.0067	0.0001	0.0000
Case 8L	Pump	Inlet	D	0.0014	-0.0003	0.0006	0.0041	-0.0006	-0.0006
		Dischg	D	0.0012	0.0004	-0.0015	0.0016	0.0000	-0.0010
	Reboiler	Inlet	D	-0.0037	-0.0102	-0.0128	-0.0021	0.0055	-0.0013
		Dischg	D	-0.0037	-0.0120	-0.0215	-0.0020	0.0067	-0.0012
	Separator	Inlet	D	-0.0004	0.0010	-0.0314	0.0000	0.0001	0.0001
		Dischg	D	-0.0005	0.0009	-0.0313	0.0001	0.0001	0.0001
	Pump	Inlet	E	0.0765	0.0455	0.0049	0.0079	0.0072	0.0860
		Dischg	E	0.0287	0.0472	0.0012	0.0068	0.0134	0.0670
	Reboiler	Inlet	E	0.0389	0.0312	0.0081	0.0043	0.0089	0.0058
		Dischg	E	0.0390	0.0304	0.0104	0.0044	0.0097	0.0057
	Separator	Inlet	E	0.0752	0.1506	0.0173	0.0207	0.0128	0.0006
		Dischg	E	0.0799	0.1516	0.0160	0.0207	0.0128	0.0006
	Pump	Inlet	T	-0.0608	0.0346	0.0416	-0.0021	0.0207	0.0324
		Dischg	T	-0.0528	0.0082	0.0258	-0.0007	0.0292	0.0235
	Reboiler	Inlet	T	-0.0124	-0.0038	-0.0068	0.0035	-0.0054	-0.0011
		Dischg	T	0.0481	-0.0054	0.0007	0.0038	-0.0051	-0.0011
	Separator	Inlet	T	0.0222	0.0358	0.0727	0.0070	-0.0001	-0.0003
		Dischg	T	-0.0008	0.0396	0.0512	0.0072	-0.0001	-0.0003

Notes
1. Displacement components are global: 1 = East 2 = North 3 = Up

BY: E.O. Weiner
DATE: 6/15/06

SUBJECT: PT TLP Coupled Structural Analysis for Evaluation of Nozzle Loads

Nozzle Displacements

Case	Location		Load	in U1	in U2	in U3	deg R1	deg R2	deg R3
Case 8o	Pump	Inlet	D	0.0063	-0.0005	0.0006	0.0041	-0.0006	-0.0003
		Dischg	D	0.0063	0.0002	-0.0016	0.0016	0.0001	-0.0008
	Reboiler	Inlet	D	0.0005	-0.0094	-0.0153	-0.0020	-0.0020	-0.0005
		Dischg	D	0.0005	-0.0101	-0.0125	-0.0020	-0.0018	-0.0005
	Separator	Inlet	D	-0.0001	0.0001	-0.0316	-0.0001	0.0000	0.0001
		Dischg	D	-0.0001	0.0000	-0.0316	-0.0001	0.0000	0.0001
	Pump	Inlet	E	0.1957	0.0556	0.0052	0.0056	0.0228	0.1032
		Dischg	E	0.1288	0.0561	0.0028	0.0050	0.0411	0.0824
	Reboiler	Inlet	E	0.0525	0.0304	0.0090	0.0042	0.0107	0.0064
		Dischg	E	0.0523	0.0295	0.0114	0.0043	0.0113	0.0062
	Separator	Inlet	E	0.0749	0.1902	0.0176	0.0206	0.0127	0.0008
		Dischg	E	0.0796	0.1927	0.0164	0.0205	0.0126	0.0008
	Pump	Inlet	T	-0.1110	0.0142	0.0378	-0.0069	0.0041	-0.0022
		Dischg	T	-0.1106	-0.0070	0.0287	-0.0036	-0.0026	-0.0018
	Reboiler	Inlet	T	-0.0275	-0.0042	0.0055	0.0037	0.0015	-0.0009
		Dischg	T	0.0188	-0.0055	0.0033	0.0039	0.0015	-0.0009
	Separator	Inlet	T	0.0165	0.0043	0.0959	0.0006	0.0002	0.0000
		Dischg	T	-0.0011	0.0045	0.0797	0.0006	0.0002	0.0000
Case 8r	Pump	Inlet	D	0.0018	-0.0006	0.0006	0.0040	-0.0006	-0.0013
		Dischg	D	0.0012	0.0001	-0.0015	0.0016	0.0000	-0.0016
	Reboiler	Inlet	D	-0.0037	-0.0102	-0.0128	-0.0021	0.0055	-0.0012
		Dischg	D	-0.0037	-0.0120	-0.0215	-0.0020	0.0067	-0.0012
	Separator	Inlet	D	-0.0004	0.0003	-0.0314	-0.0001	0.0001	0.0001
		Dischg	D	-0.0005	0.0002	-0.0313	-0.0001	0.0001	0.0001
	Pump	Inlet	E	0.0805	0.0494	0.0030	0.0048	0.0058	0.0876
		Dischg	E	0.0380	0.0501	0.0008	0.0048	0.0105	0.0701
	Reboiler	Inlet	E	0.0390	0.0308	0.0070	0.0043	0.0081	0.0055
		Dischg	E	0.0390	0.0304	0.0103	0.0044	0.0089	0.0053
	Separator	Inlet	E	0.0752	0.1922	0.0177	0.0207	0.0127	0.0006
		Dischg	E	0.0798	0.1948	0.0165	0.0206	0.0127	0.0006
	Pump	Inlet	T	-0.0742	0.0150	0.0398	-0.0065	0.0104	0.0051
		Dischg	T	-0.0743	-0.0061	0.0305	-0.0034	0.0100	0.0038
	Reboiler	Inlet	T	-0.0184	-0.0044	0.0033	0.0036	-0.0011	-0.0006
		Dischg	T	0.0278	-0.0053	0.0049	0.0039	-0.0010	-0.0006
	Separator	Inlet	T	0.0166	0.0047	0.0960	0.0006	0.0001	-0.0001
		Dischg	T	-0.0010	0.0049	0.0797	0.0006	0.0001	-0.0001

Notes
1. Displacement components are global: 1 = East 2 = North 3 = Up

BY: E.O. Weiner
DATE: 6/15/06

SUBJECT: PT TLP Coupled Structural Analysis for Evaluation of Nozzle Loads

Nozzle Displacements

Case	Location		Load	in U1	in U2	in U3	deg R1	deg R2	deg R3
Case 8s	Pump	Inlet	D	0.0036	-0.0005	0.0004	0.0040	-0.0011	-0.0008
		Dischg	D	0.0037	0.0001	-0.0016	0.0016	-0.0009	-0.0012
	Reboiler	Inlet	D	-0.0002	-0.0094	-0.0152	-0.0020	-0.0018	-0.0005
		Dischg	D	-0.0002	-0.0101	-0.0126	-0.0020	-0.0016	-0.0005
	Separator	Inlet	D	-0.0001	0.0001	-0.0316	-0.0001	0.0001	0.0001
		Dischg	D	-0.0002	0.0000	-0.0316	-0.0001	0.0000	0.0001
	Pump	Inlet	E	0.0737	0.0467	0.0030	0.0048	0.0055	0.0814
		Dischg	E	0.0353	0.0475	0.0008	0.0047	0.0100	0.0651
	Reboiler	Inlet	E	0.0372	0.0306	0.0068	0.0043	0.0078	0.0052
		Dischg	E	0.0372	0.0304	0.0102	0.0043	0.0087	0.0051
	Separator	Inlet	E	0.0728	0.1921	0.0176	0.0207	0.0124	0.0006
		Dischg	E	0.0773	0.1947	0.0164	0.0206	0.0124	0.0006
	Pump	Inlet	T	-0.0742	0.0150	0.0398	-0.0065	0.0104	0.0051
		Dischg	T	-0.0743	-0.0061	0.0305	-0.0034	0.0100	0.0038
	Reboiler	Inlet	T	-0.0184	-0.0044	0.0033	0.0036	-0.0011	-0.0006
		Dischg	T	0.0278	-0.0053	0.0049	0.0039	-0.0010	-0.0006
	Separator	Inlet	T	0.0166	0.0047	0.0960	0.0006	0.0001	-0.0001
		Dischg	T	-0.0010	0.0049	0.0797	0.0006	0.0001	-0.0001

Notes
1. Displacement components are global: 1 = East 2 = North 3 = Up

BY: E.O. Weiner
DATE: 6/15/06

SUBJECT: PT TLP Coupled Structural Analysis for Evaluation of Nozzle Loads

Modal Participation

Case	Mode Num	Hz Freq	Mass Participation X	Y	Z	Feature
Case8a	1	6.2	0.10	0.09	0.01	Reboiler Dischg EW & NS
	2	6.8	0.07	0.28	0.01	Separator Inlet NS
	3	13.4	0.01	0.28	0.00	Pump Inlet NS
	5	20.0	0.00	0.00	0.12	Separator Inlet Vert
	6	20.7	0.11	0.01	0.01	Pump Inlet EW
	14	47.4	0.00	0.00	0.11	
	17	63.8	0.22	0.01	0.01	
	19	85.7	0.00	0.00	0.15	
	23	161.5	0.00	0.02	0.13	
	24	183.3	0.12	0.00	0.00	
	Total		0.83	0.91	0.86	
Case8d	1	3.8	0.00	0.12	0.00	Reboiler Dischg NS
	3	7.2	0.01	0.55	0.00	Separator NS
	4	7.5	0.14	0.02	0.00	Pump EW
	5	9.9	0.50	0.00	0.00	Separator EW
	8	12.7	0.01	0.19	0.01	Reboiler NS
	12	18.2	0.00	0.00	0.39	Separator Vert
	17	28.5	0.00	0.01	0.13	Reboiler Vert
	24	71.0	0.01	0.00	0.11	Pump Vert
	Total		0.95	0.97	0.92	
Case 8e	1	3.9	0.00	0.41	0.00	Reboiler Dischg NS
	2	5.9	0.16	0.00	0.02	Reboiler Dischg EW
	3	13.4	0.01	0.28	0.00	Pump Inlet NS
	4	13.6	0.10	0.00	0.00	Separator Inlet EW
	7	20.6	0.11	0.01	0.01	Pump Inlet EW
	13	38.9	0.11	0.00	0.01	Reboiler Inlet EW
	18	57.2	0.12	0.00	0.02	
	19	62.5	0.14	0.00	0.06	
	21	93.2	0.00	0.00	0.11	
	23	105.6	0.00	0.00	0.14	
	Total		0.89	0.91	0.86	
Case 8g	1	3.9	0.00	0.13	0.00	Reboiler Dischg NS
	2	5.6	0.00	0.50	0.00	Separator NS
	4	6.7	0.53	0.00	0.00	Separator EW
	11	18.3	0.00	0.00	0.38	Separator Vert
	17	31.7	0.22	0.00	0.00	Reboiler EW
	19	34.3	0.00	0.19	0.00	Reboiler NS
	24	79.2	0.00	0.00	0.28	
	Total		0.93	0.93	0.89	

Notes: Modes shown for participation > 10%.
Total participation includes modes not shown.

BY: E.O. Weiner
DATE: 6/15/06

SUBJECT: PT TLP Coupled Structural Analysis for Evaluation of Nozzle Loads

Modal Participation

Case	Mode Num	Hz Freq	Mass Participation X	Y	Z	Feature
Case 8i	2	7.2	0.01	0.59	0.00	Separator NS
	3	7.5	0.14	0.02	0.00	Pump EW
	4	9.9	0.50	0.00	0.00	Separator EW
	7	12.7	0.01	0.21	0.01	Reboiler NS
	12	18.4	0.00	0.00	0.46	Separator Vert
	17	28.6	0.00	0.00	0.18	Reboiler Vert
	Total		0.95	0.95	0.91	
Case 8j	2	7.2	0.00	0.61	0.00	Separator NS
	4	9.9	0.50	0.00	0.00	Separator EW
	5	11.5	0.21	0.01	0.00	Reboiler EW
	7	12.8	0.00	0.19	0.02	Reboiler NS
	12	18.4	0.00	0.00	0.47	Separator Vert
	17	28.7	0.00	0.00	0.11	Reboiler Vert
	Total		0.95	0.96	0.91	

Notes: Modes shown for participation > 10%.
Total participation includes modes not shown.

9 References

SCN 24590-PTF-3PN-MEVV-00012. Implementation of parametric study and high pressure steam design change.
A402 AREVA Doc Id 32-5058402-00 HEP 1 TLP Reboiler Vessel Skid Seismic Qualification
A472 AREVA Doc Id 32-5034472-03, HEP 1 FPE and TLP Separator Vessel Skids Seismic Qualification
A603 AREVA Doc Id 51-5071603-01, Recirculation Pump Support Arrangement
A647B AREVA Doc Id 51-5048647B-00, WTP 24590-QL-P0A-MEW-00001-01-00550, Rev. 00A
SAPVV 24590-WTP-VV-ST-05-004 Rev 1. SAP 2000 Verification and Validation Test Report
SAP Analysis Reference Manual, SAP2000, Integrated Software for Structural Analysis and Design, Version 10.0.1, Computer and Structure, Inc. (CSI), 1995 University Avenue, Berkeley, California 94704 USA.
GTS GTSTRUDL User Reference Manual, Rev 25, Computer Aided Structural Engineering Center, School of Civil and Environmental Engineering, Georgia Institute of Technology, Atlanta, GA 30332-0355.
B31.3 ASME B31.3-2004, ASME Code for Process Piping.
ECO E.C. Ocoma verbal instructions
00005A Calculation 24590-PTF-S0C-S15T-00005-RevA

ATTACHMENT #3

FEP & TLP Separator Recirculation Isometrics And Mid Roller Details

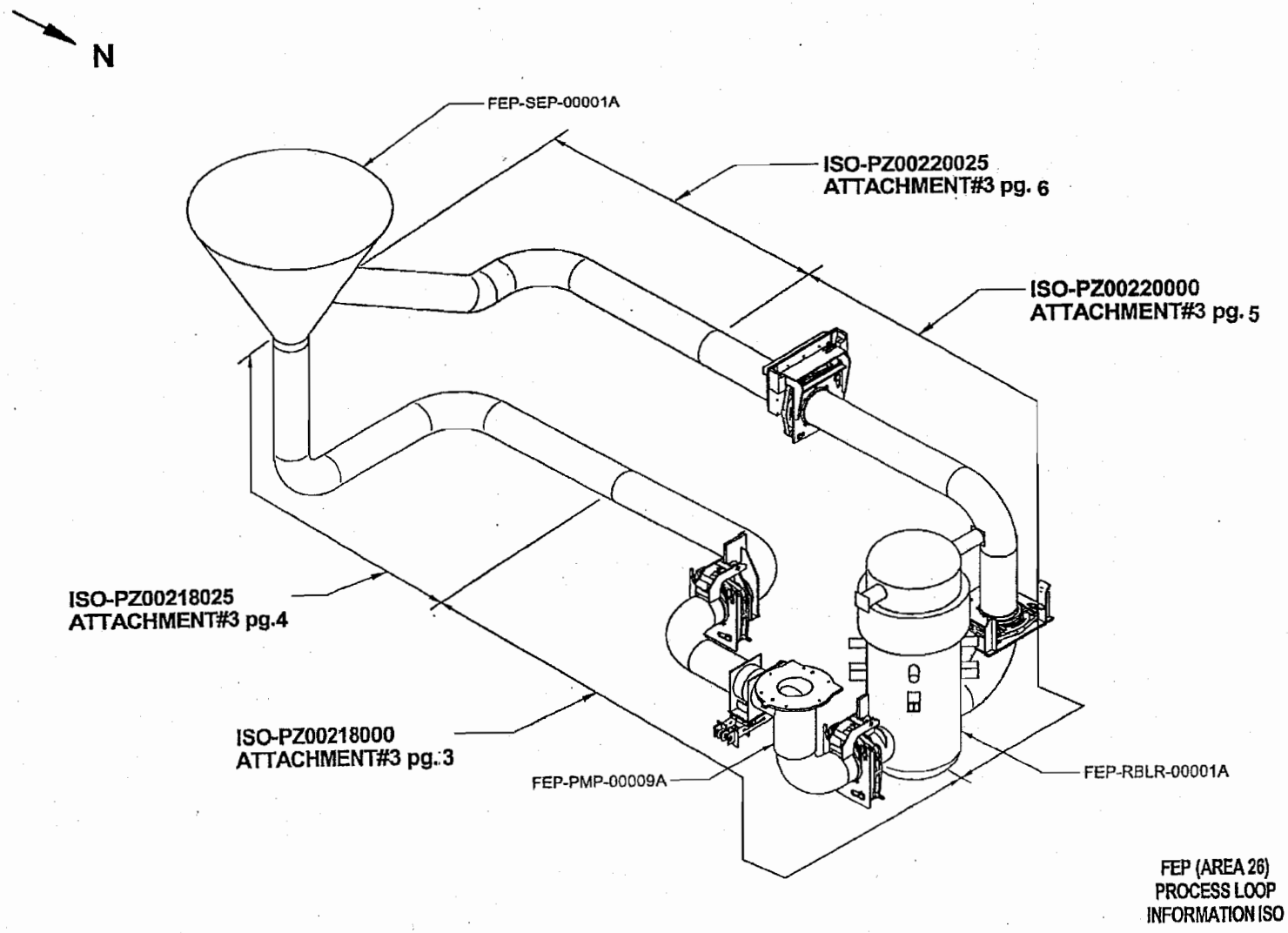

FEP (AREA 26)
PROCESS LOOP
INFORMATION ISO

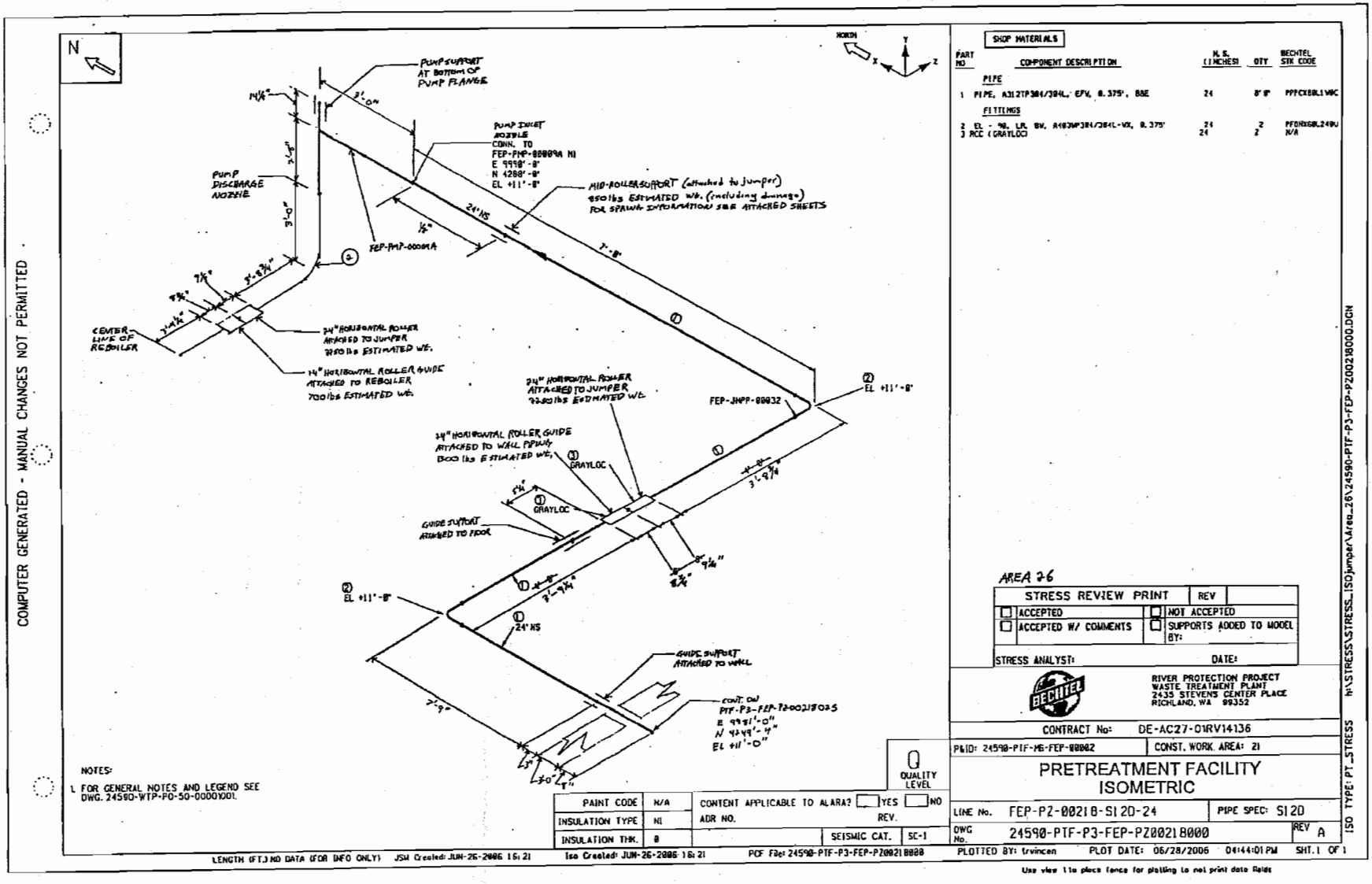
COMPUTER GENERATED - MANUAL CHANGES NOT PERMITTED
N
NORTH
PUMP SUPPORT AT BOTTOM OF PUMP FLANGE
PUMP INLET NOZZLE CONN. TO FEP-PMP-00009A N1 E 9998'-8" N 4288'-8" EL +11'-8"
PUMP DISCHARGE NOZZLE
MID-ROLLER SUPPORT (attached to jumper) 850 lbs ESTIMATED WT. (including damper) FOR SPRING INFORMATION SEE ATTACHED SHEETS
FEP-PMP-00009A
CENTER LINE OF REBOILER
24" HORIZONTAL ROLLER ATTACHED TO JUMPER 750 lbs ESTIMATED WT.
24" HORIZONTAL ROLLER GUIDE ATTACHED TO REBOILER 700 lbs ESTIMATED WT.
24" HORIZONTAL ROLLER ATTACHED TO JUMPER 750 lbs ESTIMATED WT.
FEP-JMPP-00032
EL +11'-8"
24" HORIZONTAL ROLLER GUIDE ATTACHED TO WALL PIPING 800 lbs ESTIMATED WT.
GRAYLOC
GRAYLOC
GUIDE SUPPORT ATTACHED TO FLOOR
EL +11'-8"
24" NS
GUIDE SUPPORT ATTACHED TO WALL
CONT. ON PTF-P3-FEP-P2-00218035 E 9951'-0" N 4249'-4" EL +11'-0"
NOTES:
1. FOR GENERAL NOTES AND LEGEND SEE DWG. 24590-WTP-PO-50-00001001.
QUALITY LEVEL
PAINT CODE N/A
INSULATION TYPE N1
INSULATION THK. 0
CONTENT APPLICABLE TO ALARA? YES NO
ADR NO.
REV.
SEISMIC CAT. SC-1
LENGTH (FT.) NO DATA (FOR INFO ONLY) JSW Created: JUN-26-2006 16:21
Iso Created: JUN-26-2006 16:21
PCF File: 24590-PTF-P3-FEP-PZ00218000
SHOP MATERIALS
PART NO | COMPONENT DESCRIPTION | N.S. (INCHES) | QTY | BECHTEL STK CODE
PIPE
1 PIPE, A312TP304/304L, EFW, 0.375", BBE 24 8'0" PPPCX00L1V0C
FITTINGS
2 EL - 90, LR, BW, A403WP304/304L-WX, 0.375" 24 2 PFDNX00L249U
3 RCC (GRAYLOC) 24 2 N/A
AREA 2-6
STRESS REVIEW PRINT REV
ACCEPTED
NOT ACCEPTED
ACCEPTED W/ COMMENTS
SUPPORTS ADDED TO MODEL BY:
STRESS ANALYST: DATE:
RIVER PROTECTION PROJECT WASTE TREATMENT PLANT 2435 STEVENS CENTER PLACE RICHLAND, WA 99352
CONTRACT No: DE-AC27-01RV14136
P&ID: 24590-PTF-M6-FEP-00002
CONST. WORK AREA: 21
PRETREATMENT FACILITY ISOMETRIC
LINE No. FEP-PZ-00218-S12D-24
PIPE SPEC: S12D
DWG No. 24590-PTF-P3-FEP-PZ00218000
REV A
PLOTTED BY: trvincen PLOT DATE: 06/28/2006 04:44:01 PM SHT. 1 OF 1
ISO TYPE: PT_STRESS h:\STRESS\STRESS_ISO\jumper\Area_26\24590-PTF-P3-FEP-PZ00218000.DGN
Use view 11a place fence for plotting to not print data fields

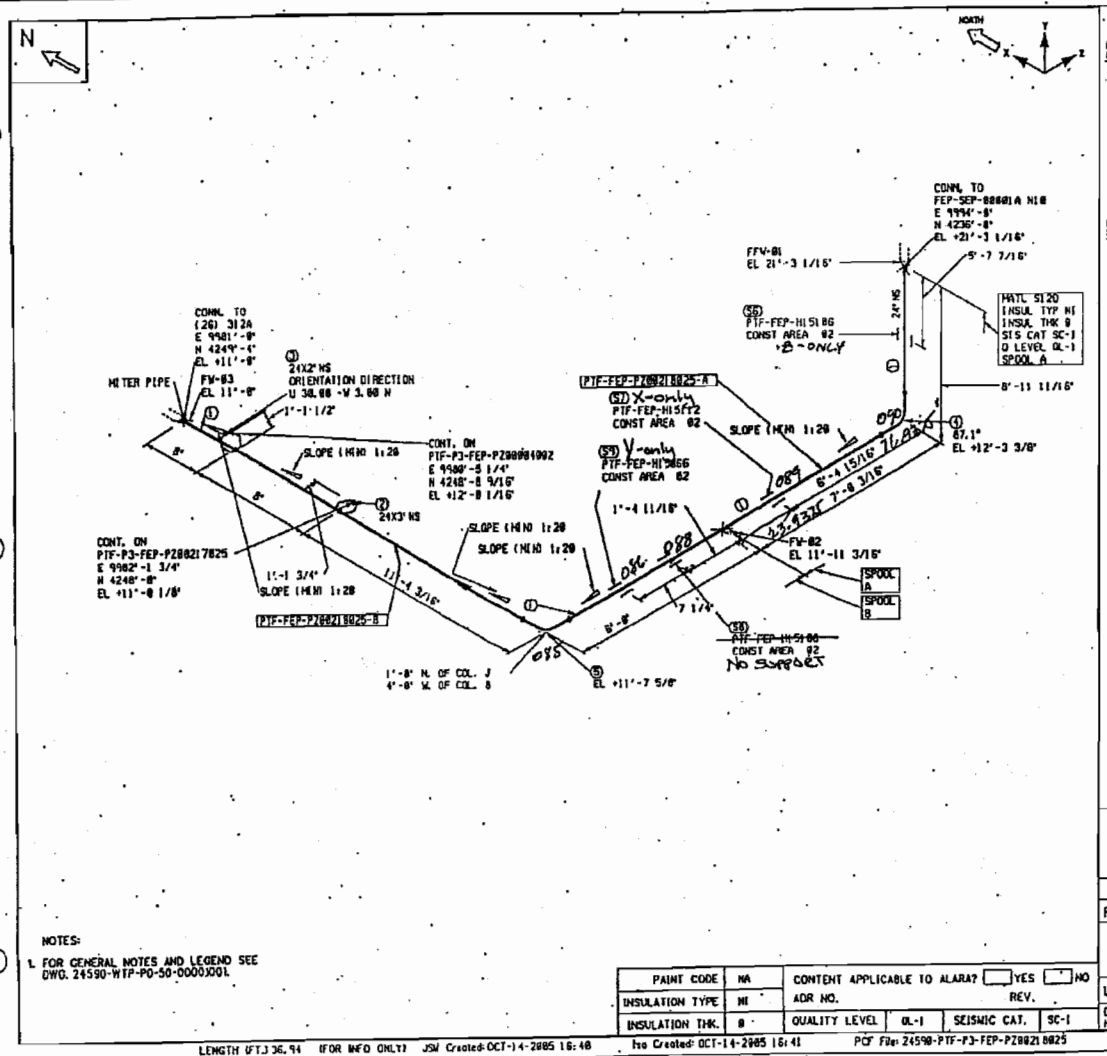

NOTES:

1. FOR GENERAL NOTES AND LEGEND SEE DWG. 24590-WTP-PO-50-0000X001.

SHOP MATERIALS

PART NO	COMPONENT DESCRIPTION	N.S. (INCHES)	QTY	BECHTEL STK CODE
	PIPE			
1	PIPE, A312TP304/304L, EFW, 0.375", BBE	24	23'0"	PPPCX60L1V0C
	FITTINGS			
2	WELDOLET, A182-F304/304L, 0.375", SCH40S	24X3	1	PFLW040L1WMA
3	WELDOLET, A182-F304/304L, 0.375", SCH80S	24X2	1	PFLW040L1XAT
4	TRIM-ED ELBOW, 87.14 DEG., EL - 90, LR, BW, A403WP304/304L-WX, 0.375"	24	1	PFDNX60L240U
5	EL - 90, LR, BW, A403WP304/304L-WX, 0.375"	24	1	PFDNX60L240U

FIELD MATERIALS

PART NO	COMPONENT DESCRIPTION	N.S. (INCHES)	QTY	BECHTEL STK CODE
	SUPPORTS			
6	PIPE SUPT, PTF-FEP-H15106		1	
7	PIPE SUPT, REVIEWME		1	
8	PIPE SUPT, PTF-FEP-H15100		1	
9	PIPE SUPT, PTF-FEP-H15066		1	

ECO 10/17/05

STRESS REVIEW PRINT	REV
☐ ACCEPTED	☐ NOT ACCEPTED
☐ ACCEPTED W/ COMMENTS	☐ SUPPORTS ADDED TO MODEL BY:
STRESS ANALYST:	DATE:

BECHTEL

RIVER PROTECTION PROJECT
WASTE TREATMENT PLANT
2435 STEVENS CENTER PLACE
RICHLAND, WA 99352

CONTRACT No: DE-AC27-01RV14136

P&ID: 24590-PTF-H6-FEP-00002 | CONST. WORK AREA: 02

PRETREATMENT FACILITY
ISOMETRIC

LINE No. FEP-PZ-00218-S12D-24 | PIPE SPEC: S12D

DWG No. 24590-PTF-P3-FEP-PZ00218025 | REV A

PAINT CODE	NA	CONTENT APPLICABLE TO ALARA? ☐ YES ☐ NO
INSULATION TYPE	NI	ADR NO. REV.
INSULATION THK.	0	QUALITY LEVEL QL-1 SEISMIC CAT. SC-1

LENGTH (FT.) 36.94 (FOR INFO ONLY) JSW Created: OCT-14-2005 16:40 Iso Created: OCT-14-2005 16:41 PCF File: 24590-PTF-P3-FEP-PZ00218025

PLOTTED BY: ecocomo PLOT DATE: 10/17/2005 10:48:22 AM SHT. 1 OF 1

ISO TYPE: PT_xSTRESS C:\Documents and Settings\ecocomo\Local Settings\Temporary Internet Files\OLK3\FEP-PZ00218025-101505.DGN

Use view 1 to place fence for plotting to not print data fields

AREA 26

COMPUTER GENERATED - MANUAL CHANGES NOT PERMITTED

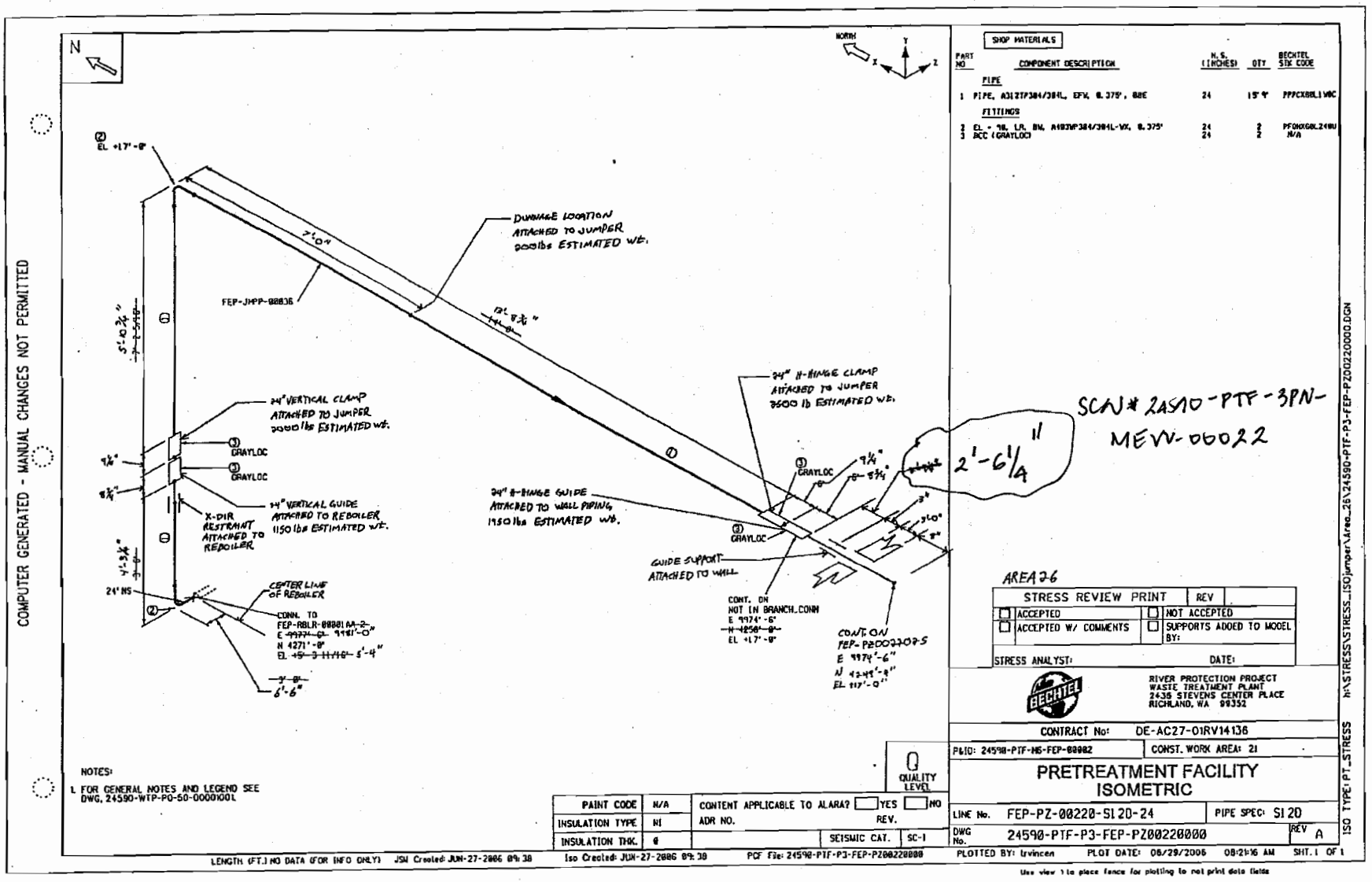
COMPUTER GENERATED - MANUAL CHANGES NOT PERMITTED
N
NORTH
SHOP MATERIALS
PART NO
COMPONENT DESCRIPTION
N.S. (INCHES)
QTY
BECHTEL STK CODE
PIPE
1 PIPE, A312TP304/304L, EFW, 0.375", 80E 24 15'-9" PPPCX80L1W0C
FITTINGS
2 EL - 90, LR, BW, A403WP304/304L-WX, 0.375" 24 2 PFOHXG0L240U
3 BCC (GRAYLOC) 24 2 N/A
EL +17'-0"
DUNNAGE LOCATION ATTACHED TO JUMPER 200lbs ESTIMATED WT.
7'-0"
FEP-JMPP-00036
24" VERTICAL CLAMP ATTACHED TO JUMPER 2000lbs ESTIMATED WT.
GRAYLOC
24" VERTICAL GUIDE ATTACHED TO REBOILER 1150 lbs ESTIMATED WT.
X-DIR RESTRAINT ATTACHED TO REBOILER
24" NS
CENTER LINE OF REBOILER
CONN. TO FEP-RBLR-00001AA-2
E 9971'-0"
N 4271'-0"
EL 5'-4"
6'-6"
24" H-HINGE CLAMP ATTACHED TO JUMPER 2500 lb ESTIMATED WT.
24" H-HINGE GUIDE ATTACHED TO WALL PIPING 1950 lbs ESTIMATED WT.
GUIDE SUPPORT ATTACHED TO WALL
CONT. ON NOT IN BRANCH CONN
E 9974'-6"
EL +17'-0"
CONT. ON FEP-PZ00220-S
E 9974'-6"
EL +17'-0"
2'-6 1/4"
SCN# 24590-PTF-3PN-MEVV-00022
AREA 26
STRESS REVIEW PRINT
REV
ACCEPTED
NOT ACCEPTED
ACCEPTED W/ COMMENTS
SUPPORTS ADDED TO MODEL BY:
STRESS ANALYST:
DATE:
RIVER PROTECTION PROJECT
WASTE TREATMENT PLANT
2435 STEVENS CENTER PLACE
RICHLAND, WA 99352
CONTRACT No: DE-AC27-01RV14136
P&ID: 24590-PTF-MS-FEP-00002
CONST. WORK AREA: 21
PRETREATMENT FACILITY
ISOMETRIC
LINE No. FEP-PZ-00220-S12D-24
PIPE SPEC: S12D
DWG No. 24590-PTF-P3-FEP-PZ00220000
REV A
PLOTTED BY: trvincen
PLOT DATE: 06/29/2006 08:21:16 AM
SHT. 1 OF 1
NOTES:
1. FOR GENERAL NOTES AND LEGEND SEE DWG. 24590-WTP-PO-50-00001001
QUALITY LEVEL
PAINT CODE N/A
INSULATION TYPE NI
INSULATION THK. 0
CONTENT APPLICABLE TO ALARA? YES NO
ADR NO.
REV.
SEISMIC CAT. SC-1
LENGTH (FT.) NO DATA (FOR INFO ONLY) JSM Created: JUN-27-2006 09:38
Iso Created: JUN-27-2006 09:38
PCF File: 24590-PTF-P3-FEP-PZ00220000
ISO TYPE: PT_STRESS
h:\STRESS\STRESS_ISOjumper\Area_26\24590-PTF-P3-FEP-PZ00220000.DGN
Use view 1 to place fence for plotting to not print data fields

COMPUTER GENERATED - MANUAL CHANGES NOT PERMITTED

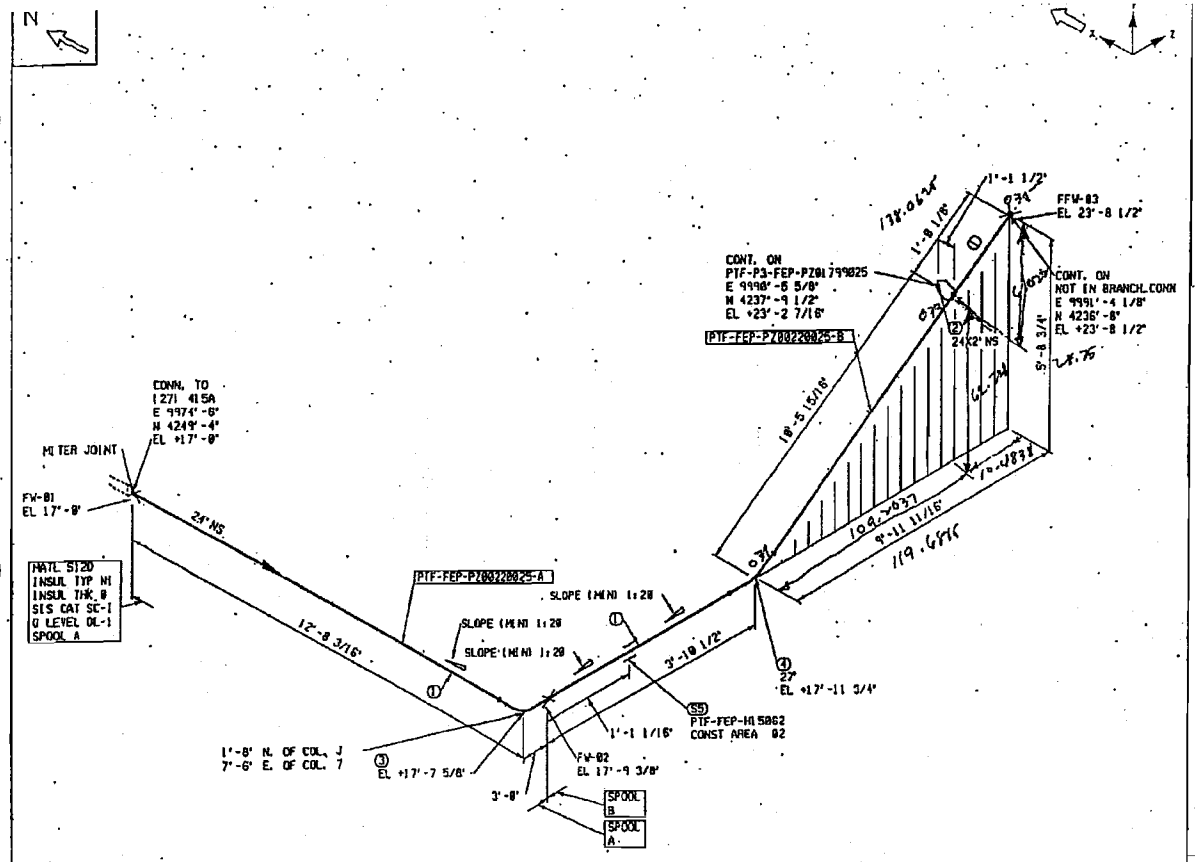

NOTES:

1. FOR GENERAL NOTES AND LEGEND SEE DWG. 24590-WTP-PO-50-00001001.

PAINT CODE	NA	CONTENT APPLICABLE TO ALARA?	YES	NO	
INSULATION TYPE	NI	ADR NO.	REV.		
INSULATION THK.	0	QUALITY LEVEL	QL-1	SEISMIC CAT.	SC-I

LENGTH (FT.) 32.19 (FOR INFO ONLY) JSM Created: FEB-08-2005 07:24 Iso Created: FEB-08-2005 07:25 PCF File: 24590-PTF-P3-FEP-PZ00220025

PART NO	COMPONENT DESCRIPTION	N.S. (INCHES)	QTY	BECHTEL STK CODE
	PIPE			
1	PIPE, A312TP304/304L, EFW, 0.375", BBE	24	23'8"	PPPCX08L1WBC
	FITTINGS			
2	WELDOLET, A182-F304/304L, 0.375", SCH80S	24X2	1	PFLW040L1XAT
3	EL - 90, LR, BW, A403WP304/304L-WX, 0.375"	24	1	PFONX08L240U
4	TRIMMED ELBOW, 27.02 DEG., EL - 45, LR, BW, A403WP304/304L-WX, 0.375"	24	1	PFNNX08L230U

FIELD MATERIALS

PART NO	COMPONENT DESCRIPTION	N.S. (INCHES)	QTY	BECHTEL STK CODE
	SUPPORTS.			
5	PIPE SUPT, PTF-FEP-H15062			

031-033

$\phi = 29.8276°$

$y = 70 - \frac{4}{16}$ (cos ϕ)

$= 67.7328"$

$z = 10 - \frac{4}{16}$ (cos ϕ)

$= 109.7037"$

ECO 10/17/05

JMK 2-9-05

STRESS REVIEW PRINT	REV
☐ ACCEPTED	☐ NOT ACCEPTED
☐ ACCEPTED W/ COMMENTS	☐ SUPPORTS ADDED TO MODEL BY:
STRESS ANALYST:	DATE:

RIVER PROTECTION PROJECT
WASTE TREATMENT PLANT
2435 STEVENS CENTER PLACE
RICHLAND, WA 99352

CONTRACT No: DE-AC27-01RV14136

P&ID: 24590-PTF-M6-FEP-00002 CONST. WORK AREA: 02

PRETREATMENT FACILITY ISOMETRIC

LINE No. FEP-PZ-00220-S12D-24 PIPE SPEC: S12D

DWG No. 24590-PTF-P3-FEP-PZ00220025 REV A

PLOTTED BY: ykim PLOT DATE: 02/08/2005 07:27:53 AM SHT. 1 OF 1

ISO TYPE: PT_STRESS C:\iso\24590-PTF-P3-FEP-PZ00220025.DGN

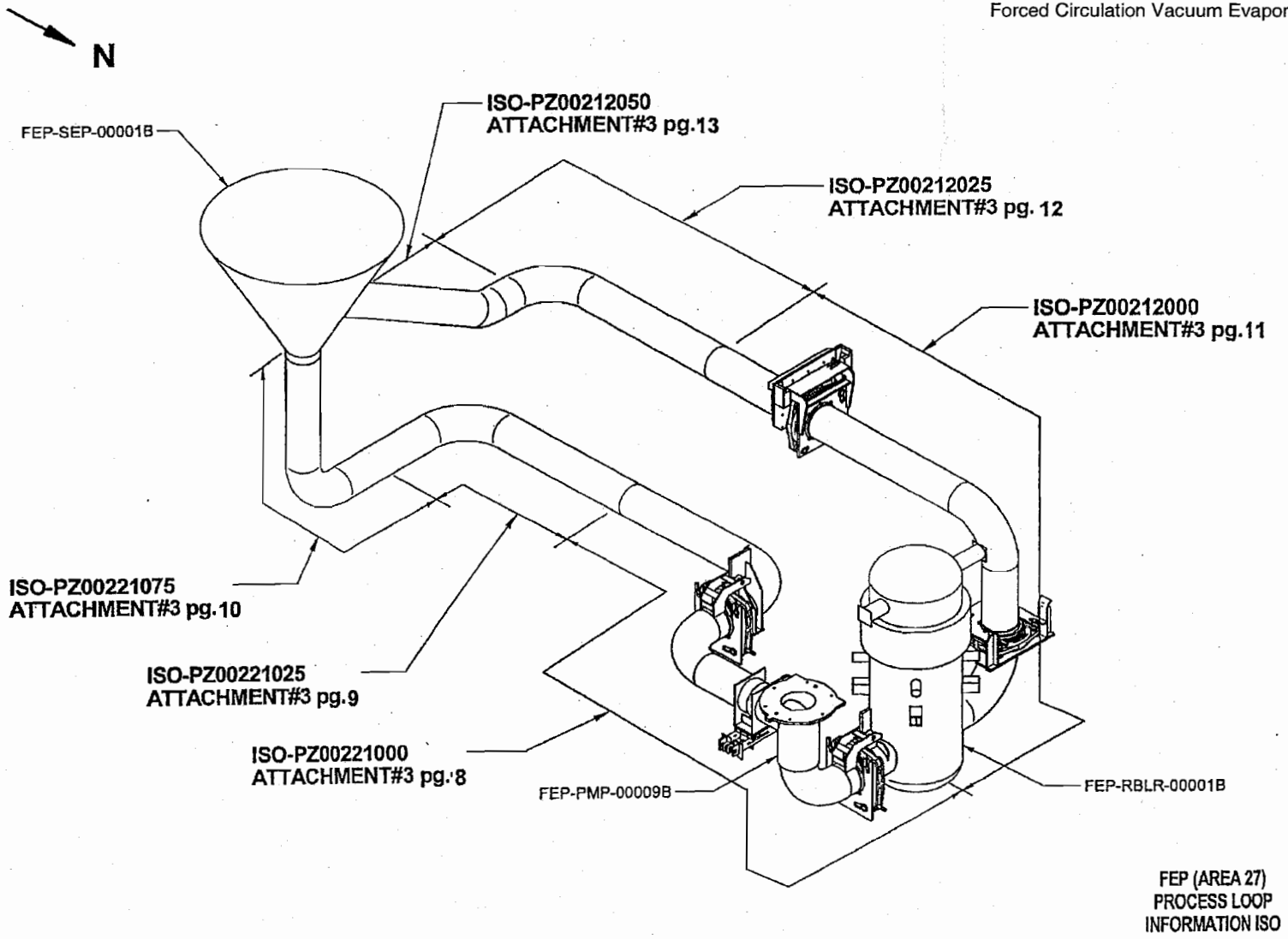

FEP (AREA 27)
PROCESS LOOP
INFORMATION ISO

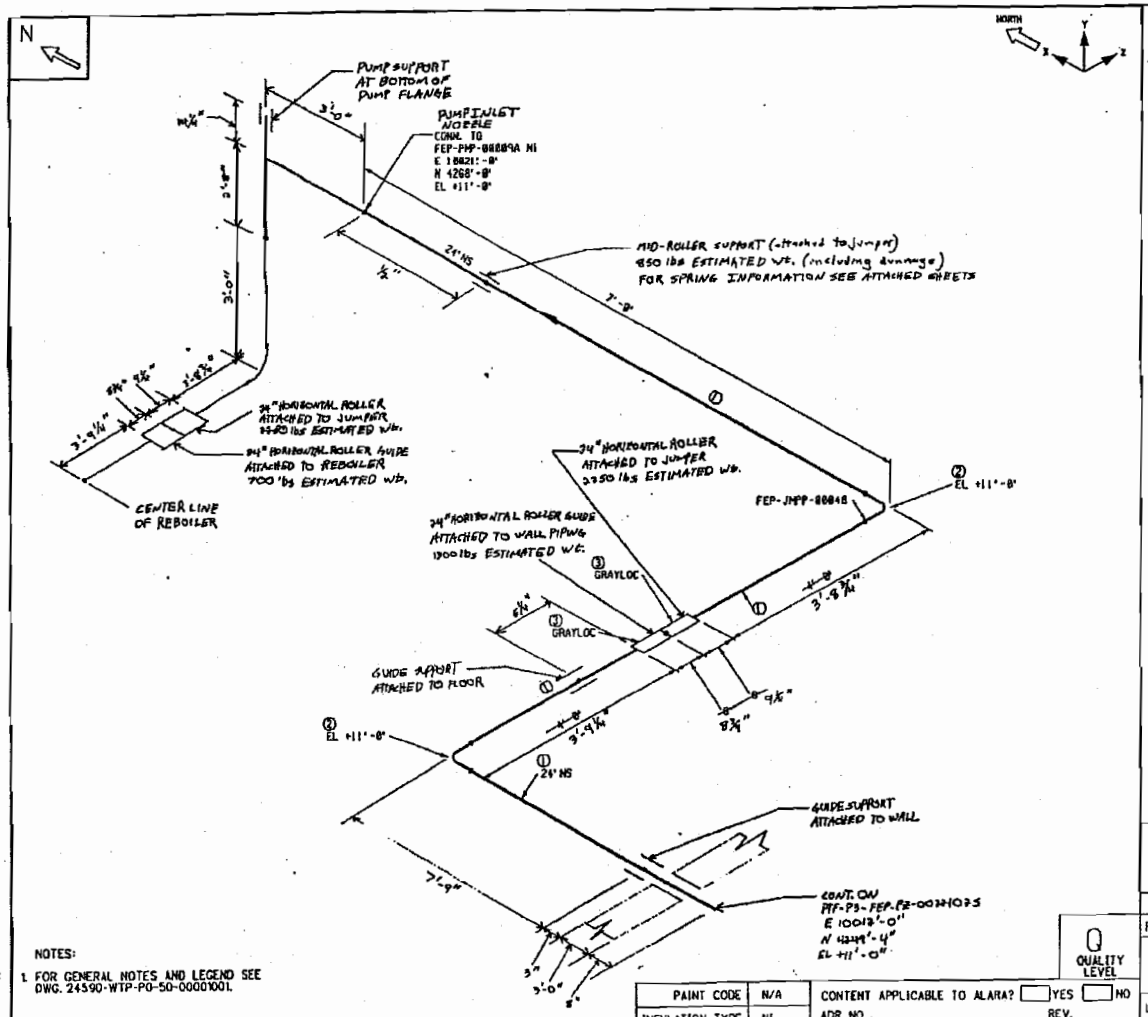

NOTES:

1. FOR GENERAL NOTES AND LEGEND SEE DWG. 24590-WTP-PO-50-00001001.

SHOP MATERIALS

PART NO	COMPONENT DESCRIPTION	N.S. (INCHES)	QTY	BECHTEL STK CODE
	PIPE			
1	PIPE, A312TP304/304L, EFW, 0.375", BBE	24	8'0"	PPPCX08L1WBC
	FITTINGS			
2	EL - 90, LR, BW, A403WP304/304L-WX, 0.375"	24	2	PFDNX08L249U
3	RCC (GRAYLOC)	24	2	N/A

AREA 37

STRESS REVIEW PRINT	REV
☐ ACCEPTED	☐ NOT ACCEPTED
☐ ACCEPTED W/ COMMENTS	☐ SUPPORTS ADDED TO MODEL BY:
STRESS ANALYST:	DATE:

RIVER PROTECTION PROJECT
WASTE TREATMENT PLANT
2435 STEVENS CENTER PLACE
RICHLAND, WA 99352

CONTRACT No: DE-AC27-01RV14136

P&ID: 24590-PTF-M6-FEP-00004 | CONST. WORK AREA: 21

PRETREATMENT FACILITY ISOMETRIC

LINE No. FEP-PZ-00221-S12D-24 | PIPE SPEC: S12D

DWG No. 24590-PTF-P3-FEP-PZ00221000 | REV A

PAINT CODE	N/A	CONTENT APPLICABLE TO ALARA? ☐ YES ☐ NO
INSULATION TYPE	NI	ADR NO. REV.
INSULATION THK.	0	SEISMIC CAT. SC-I

Q QUALITY LEVEL

COMPUTER GENERATED - MANUAL CHANGES NOT PERMITTED

LENGTH (FT.) NO DATA (FOR INFO ONLY) JSW Created: JUN-29-2006 15:14 Iso Created: JUN-29-2006 15:15 PCF File: 24590-PTF-P3-FEP-PZ00221000 PLOTTED BY: trvincen PLOT DATE: 06/29/2006 03:44:50 PM SHT. 1 OF 1

ISO TYPE: PT_STRESS c:\isos\24590-PTF-P3-FEP-PZ00221000.DGN

Use view 1 to place fence for plotting to not print data fields

COMPUTER GENERATED - MANUAL CHANGES NOT PERMITTED

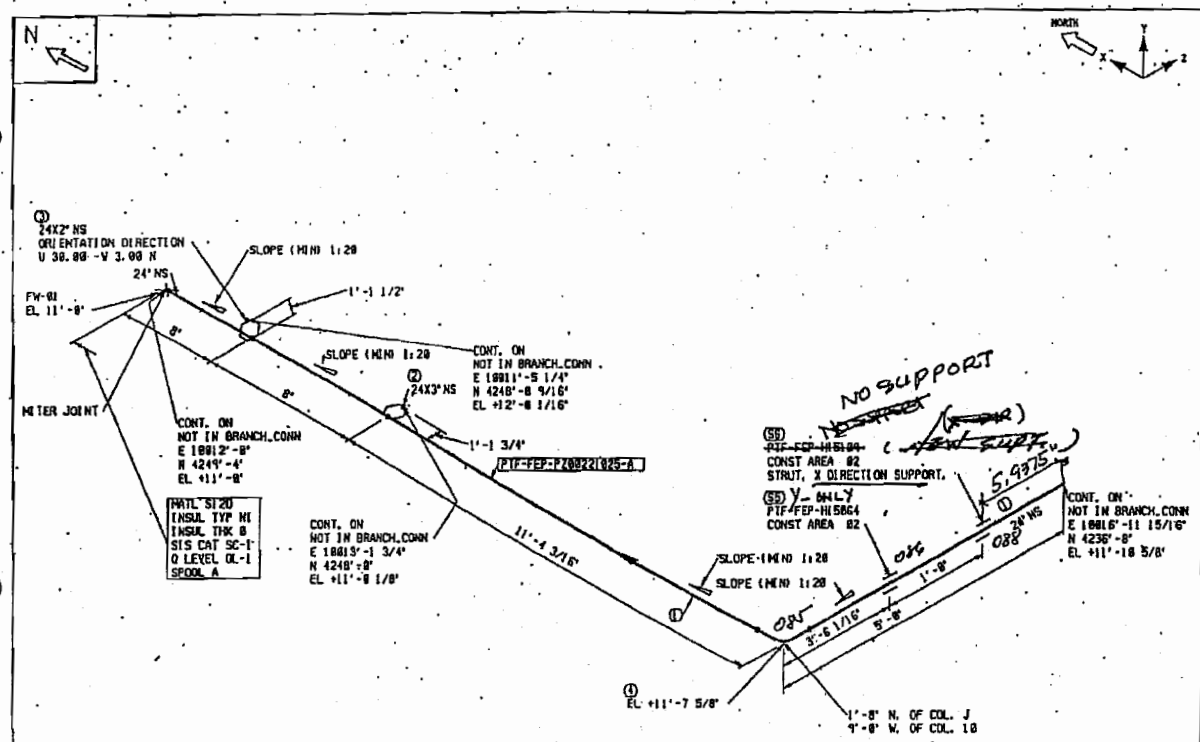

NOTES:

1. FOR GENERAL NOTES AND LEGEND SEE DWG. 24590-WTP-PO-50-00001001.

10-06-05

PAINT CODE	NA	CONTENT APPLICABLE TO ALARA?	YES	NO	
INSULATION TYPE	MI	ADR NO.	REV.		
INSULATION THK.	0	QUALITY LEVEL	QL-1	SEISMIC CAT.	SC-1

SHOP MATERIALS

PART NO	COMPONENT DESCRIPTION	N.S. (INCHES)	QTY	BECHTEL STK CODE
	PIPE			
1	PIPE, A312TP304/304L, EFW, 0.375", BBE	24	11'9"	PPPCX00L1V0C
	FITTINGS			
2	WELDOLET, A182-F304/304L, 0.375", SCH40S	24X3	1	PFLW040L1WHA
3	WELDOLET, A182-F304/304L, 0.375", SCH80S	24X2	1	PFLW040L1XAT
4	EL - 90, LR, BW, A403WP304/304L-WX, 0.375"	24	1	PFONX60L240U

FIELD MATERIALS

PART NO	COMPONENT DESCRIPTION	N.S. (INCHES)	QTY	BECHTEL STK CODE
	SUPPORTS			
5	PIPE SUPT, PTF-FEP-H15064		1	
6	PIPE SUPT, PTF-FEP-H15109		1	

STRESS REVIEW PRINT	REV
☐ ACCEPTED	☐ NOT ACCEPTED
☐ ACCEPTED W/ COMMENTS	☐ SUPPORTS ADDED TO MODEL BY:
STRESS ANALYST:	DATE:

BECHTEL

RIVER PROTECTION PROJECT
WASTE TREATMENT PLANT
2435 STEVENS CENTER PLACE
RICHLAND, WA 99352

CONTRACT No: DE-AC27-01RV14136

P&ID: 24590-PTF-M6-FEP-00004 | CONST. WORK AREA: 02

PRETREATMENT FACILITY
ISOMETRIC

LINE No. FEP-PZ-00221-S120-24 | PIPE SPEC: S120

DWG No. 24590-PTF-P3-FEP-PZ00221025 | REV. A

ISO TYPE: PT_xSTRESS C:\iso\tmp_conn_check.DGN

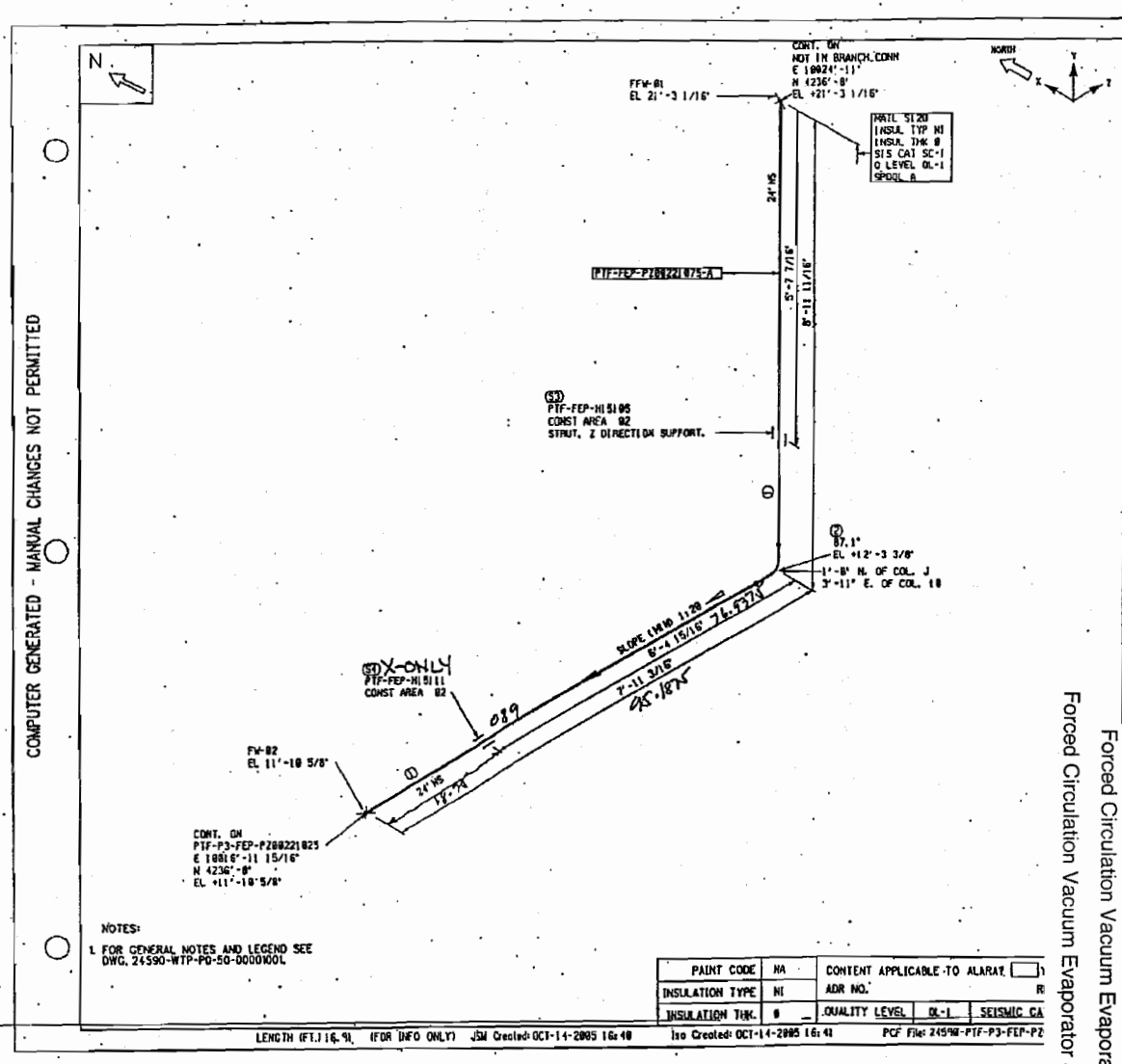

SHOP MATERIALS

PART NO	COMPONENT DESCRIPTION	N.S. (INCHES)	QTY	BECHTEL STK CODE
	PIPE			
1	PIPE, A312TP304/304L, EFW, 0.375", BBE	24	11'3"	PPPCX00L1V6C
	FITTINGS			
2	TRIMMED ELBOW, 87.14 DEG., EL - 90, LR, BW, A403WP304/304L-WX, 0.375"	24	1	PFONX60L240U

FIELD MATERIALS

PART NO	COMPONENT DESCRIPTION	N.S. (INCHES)	QTY	BECHTEL STK CODE
	SUPPORTS			
3	PIPE SUPT, PTF-FEP-H15105		1	
4	PIPE SUPT, REVIEWME		1	

STRESS REVIEW PRINT | REV

☐ ACCEPTED ☐ NOT ACCEPTED
☐ ACCEPTED W/ COMMENTS ☐ SUPPORTS ADDED TO MODEL BY:

STRESS ANALYST: DATE:

BECHTEL

RIVER PROTECTION PROJECT
WASTE TREATMENT PLANT
2435 STEVENS CENTER PLACE
RICHLAND, WA 99352

CONTRACT No: DE-AC27-01RV14136

24590-PTF-H6-FEP-00004 | CONST. WORK AREA: 02

PRETREATMENT FACILITY
ISOMETRIC

No. FEP-PZ-00221-S12D-24 | PIPE SPEC: S12D

24590-PTF-P3-FEP-PZ00221075 | REV A

ITTED BY: ecocomo PLOT DATE: 10/17/2005 10:47:26 AM SHT. 1 OF 1

Use view 1 to place fence for plotting to not print data fields

AREA 27

ISO TYPE: PT_xSTRESS C:\Documents and Settings\ecocomo\LocalSettings\Temporary Internet Files\OLK3\FEP-PZ00221075-101505.DGN

24590-PTF-3PS-MEVV-T0001, Rev. 3
Forced Circulation Vacuum Evaporator System

Forced Circulation Vacuum Evaporator System

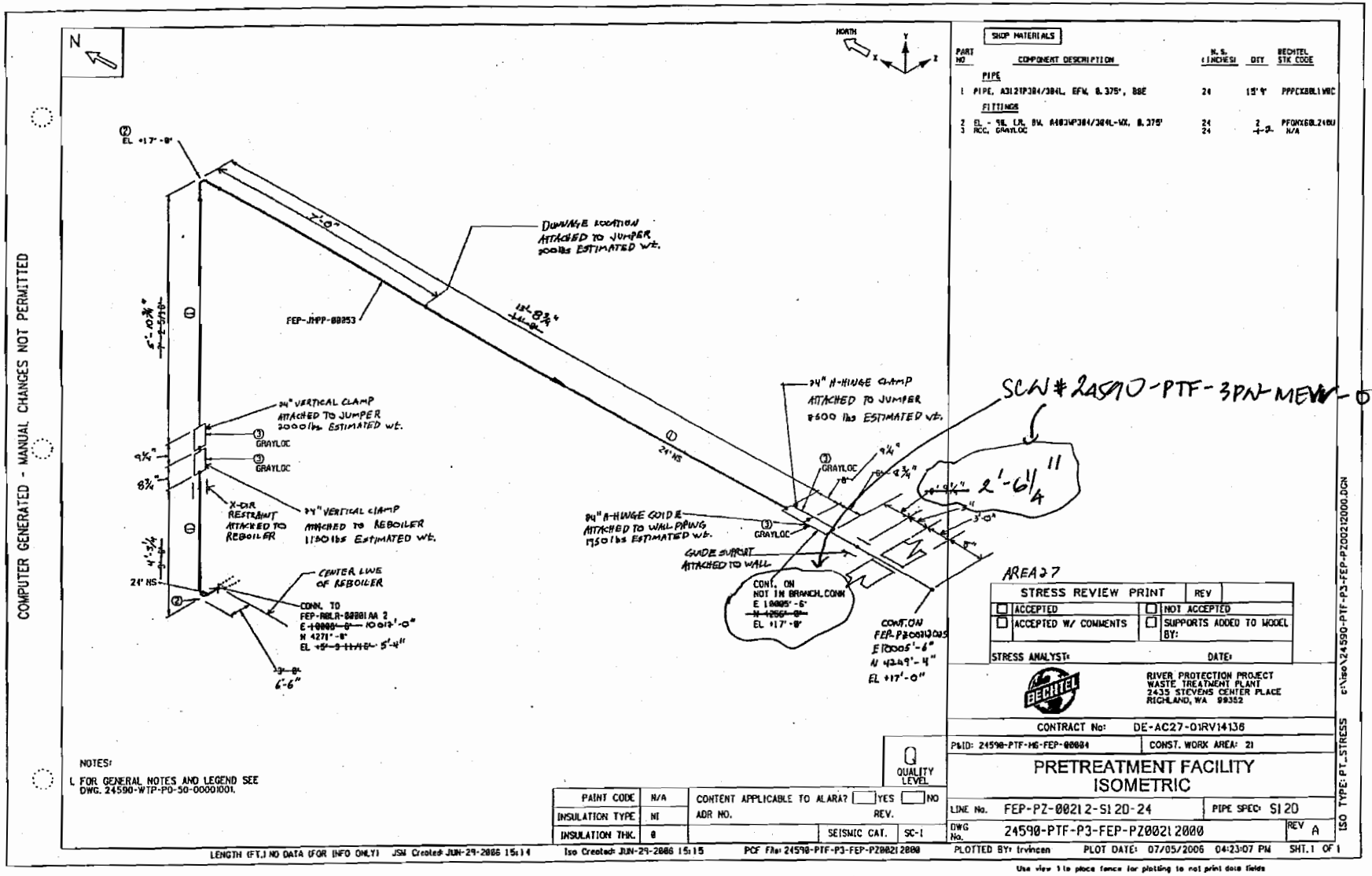
COMPUTER GENERATED - MANUAL CHANGES NOT PERMITTED
N
NORTH
SHOP MATERIALS
PART NO
COMPONENT DESCRIPTION
N.S. (INCHES)
QTY
BECHTEL STK CODE
PIPE
1 PIPE, A312TP304/304L, EFW, 0.375", BSE 24 15'-9" PPPCX80L1W0C
FITTINGS
2 EL - 90, LR, BW, A403WP304/304L-WX, 0.375" 24 2 PFQNX60L240U
3 RCC, GRAYLOC 24 N/A
EL +17'-0"
DUNNAGE LOCATION ATTACHED TO JUMPER 200lbs ESTIMATED WT.
FEP-JHPP-00053
24" VERTICAL CLAMP ATTACHED TO JUMPER 2000lbs ESTIMATED WT.
GRAYLOC
X-DIR RESTRAINT ATTACHED TO REBOILER
24" VERTICAL CLAMP ATTACHED TO REBOILER 1150lbs ESTIMATED WT.
CENTER LINE OF REBOILER
CONN. TO FEP-RBLR-00001AA 2
24" NS
24" H-HINGE CLAMP ATTACHED TO JUMPER 8500 lbs ESTIMATED WT.
24" H-HINGE GUIDE ATTACHED TO WALL PIPING 1950lbs ESTIMATED WT.
GUIDE SUPPORT ATTACHED TO WALL
CONT. ON NOT IN BRANCH CONN
E 10005'-6"
EL +17'-0"
CONT. ON FEP-PZ00212025
E 10005'-6"
N 4249'-4"
EL +17'-0"
SCW # 24590-PTF-3PN-MEVV-00022
2'-6 1/4"
AREA 27
STRESS REVIEW PRINT
REV
ACCEPTED
NOT ACCEPTED
ACCEPTED W/ COMMENTS
SUPPORTS ADDED TO MODEL BY:
STRESS ANALYST:
DATE:
RIVER PROTECTION PROJECT
WASTE TREATMENT PLANT
2435 STEVENS CENTER PLACE
RICHLAND, WA 99352
CONTRACT No: DE-AC27-01RV14136
P&ID: 24590-PTF-M6-FEP-00004
CONST. WORK AREA: 21
PRETREATMENT FACILITY
ISOMETRIC
LINE No. FEP-PZ-00212-S12D-24
PIPE SPEC: S12D
DWG No. 24590-PTF-P3-FEP-PZ00212000
REV A
QUALITY LEVEL
NOTES:
1. FOR GENERAL NOTES AND LEGEND SEE DWG. 24590-WTP-PO-50-00001001.
PAINT CODE N/A
INSULATION TYPE NI
INSULATION THK. 0
CONTENT APPLICABLE TO ALARA? YES NO
ADR NO.
REV.
SEISMIC CAT. SC-1
LENGTH (FT.) NO DATA (FOR INFO ONLY) JSM Created: JUN-29-2006 15:14
Iso Created: JUN-29-2006 15:15
PCF File: 24590-PTF-P3-FEP-PZ00212000
PLOTTED BY: trvincen
PLOT DATE: 07/05/2006 04:23:07 PM
SHT. 1 OF 1
ISO TYPE: PT_STRESS
c:\iso\24590-PTF-P3-FEP-PZ00212000.DGN
Use view 1 to place fence for plotting to not print data fields

COMPUTER GENERATED - MANUAL CHANGES NOT PERMITTED

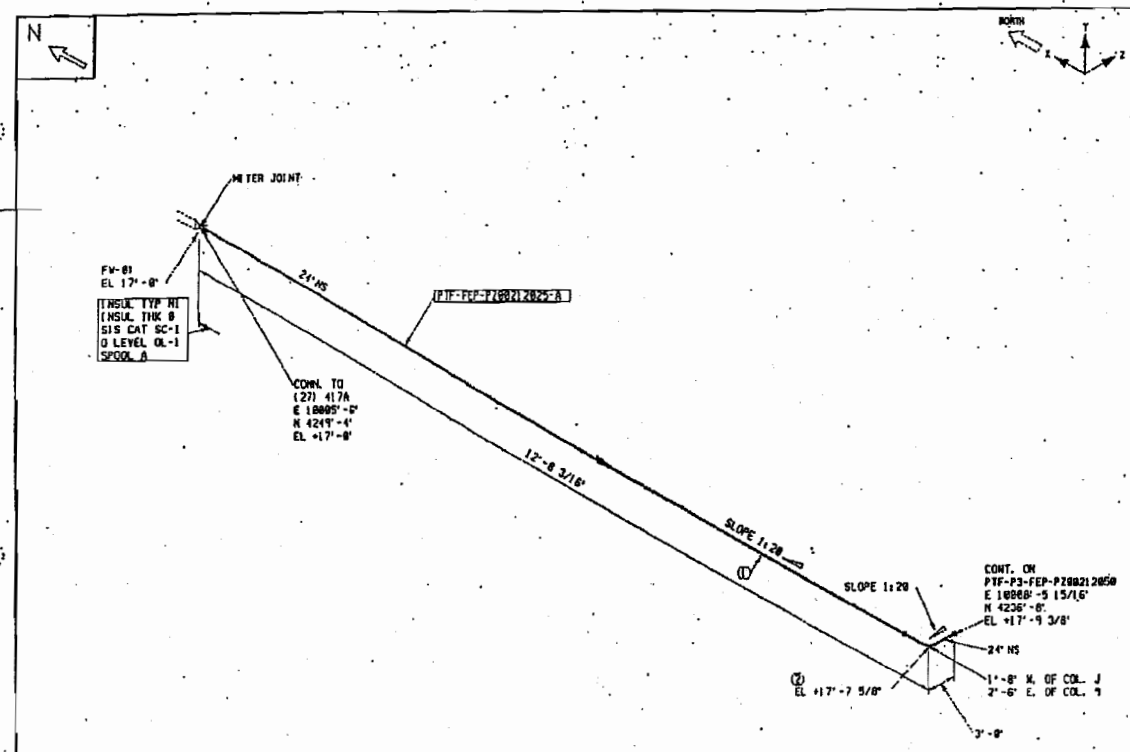

NOTES:

1. FOR GENERAL NOTES AND LEGEND SEE DWG. 24590-PTF-P3-P36T-01000.
2. SEE DWG. 24590-BOF-C2-C12T-00002 FOR CONVERSION FROM PTF FACILITY ELEVATIONS TO SITE ELEVATIONS. PTF FACILITY ELEVATION 0'-0" EQUALS SITE ELEVATION 678'-0".

SHOP MATERIALS

PART NO	COMPONENT DESCRIPTION	N.S. (INCHES)	QTY	BECHTEL STK CODE
	PIPE			
1	PIPE, A312TP304/304L, EFW, 0.375", BBE	24	9'-9"	PPPCXBBL1V4C
	FITTINGS			
2	EL - 90, LR, BW, A403WP304/304L-WX, 0.375"	24	1	PFONXGBL240U

STRESS REVIEW PRINT	REV
☐ ACCEPTED	☐ NOT ACCEPTED
☐ ACCEPTED W/ COMMENTS	☐ SUPPORTS ADDED TO MODEL BY:
STRESS ANALYST:	DATE:

RIVER PROTECTION PROJECT
WASTE TREATMENT PLANT
2435 STEVENS CENTER PLACE
RICHLAND, WA 99352

CONTRACT No: DE-AC27-01RV14136

P&ID: 24590-PTF-MS-FEP-00004 | CONST. WORK AREA: 02

PRETREATMENT FACILITY ISOMETRIC

PAINT CODE	NI	CONTENT APPLICABLE TO ALARA? ☐ YES ☐ NO	
INSULATION TYPE	NI	ADR NO.	REV.
INSULATION THK.	0	QUALITY LEVEL DL-1	SEISMIC CAT. SC-1

LINE No. FEP-PZ-00212-S12D-24 | PIPE SPEC: S12D

DWG No. 24590-PTF-P3-FEP-PZ00212025 | REV A

PLOTTED BY: kohuber | PLOT DATE: 01/27/2005 10:36:53 AM | SHT. 1 OF 1

ISO TYPE: PT_xSTRESS H:\STRESS\PTF_JU21\Area_26\24590-24.DGN

LENGTH (FT.) 15.88 (FOR INFO ONLY) JSM Created: JUN-25-2004 13:37 Iso Created: JUN-25-2004 13:38 PCF File: 24590-PTF-P3-FEP-PZ00212025

Use view 1 to place fence for plotting to not print data fields

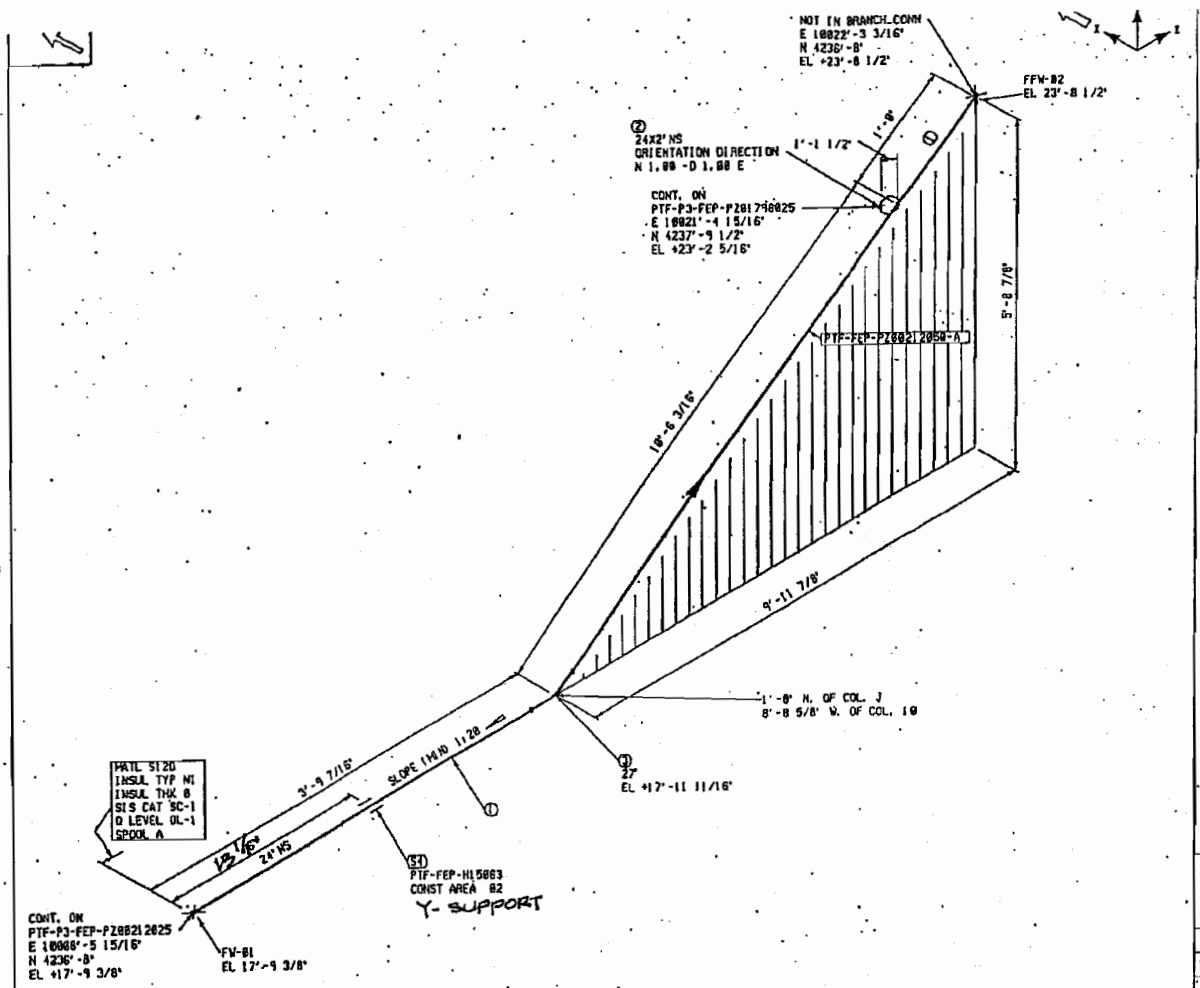

NOTES:

1. FOR GENERAL NOTES AND LEGEND SEE DWG. 24590-WTP-PO-50-00001001

PART NO	COMPONENT DESCRIPTION	N.S. (INCHES)	QTY	BECHTEL STK CODE
	PIPE			
1	PIPE, A312TP304/304L, EFW, 0.375", BBE	24	12'11"	PPPCX00LIVBC
	FITTINGS			
2	WELDOLET, A182-F304/304L, 0.375", SCH80S	24X2	1	PFLV040LIXAT
3	TRIMMED ELBOW, 27.81 DEG., EL - 45, LR, BW, A403WP304/304L-XX, 0.375"	24	1	PFBWXG0L230U
	FIELD MATERIALS			
PART NO	COMPONENT DESCRIPTION	N.S. (INCHES)	QTY	BECHTEL STK CODE
	SUPPORTS			
4	PIPE SUPT, PTF-FEP-HL5083		1	

STRESS REVIEW PRINT | REV

☐ ACCEPTED ☐ NOT ACCEPTED

☐ ACCEPTED W/ COMMENTS ☐ SUPPORTS ADDED TO MODEL BY:

STRESS ANALYST: DATE:

RIVER PROTECTION PROJECT
WASTE TREATMENT PLANT
2435 STEVENS CENTER PLACE
RICHLAND, WA 99352

CONTRACT No: DE-AC27-01RV14136

P&ID: 24590-PTF-MB-FEP-00004 | CONST. WORK AREA: B2

PRETREATMENT FACILITY ISOMETRIC

LINE No. FEP-PZ-00212-S120-24 | PIPE SPEC: S120

DWG No. 24590-PTF-P3-FEP-PZ00212050 | REV A.

PAINT CODE	NA	CONTENT APPLICABLE TO ALARA? ☐ YES ☐ NO			
INSULATION TYPE	NI	ACR NO.		REV.	
INSULATION THK.	0	QUALITY LEVEL	QL-1	SEISMIC CAT.	SC-I

LENGTH (FT.) 16.13 (FOR INFO ONLY) USM Created: FEB-08-2005 08:17 Iso Created: FEB-08-2005 08:17 PCF File: TMP_CONN_CHECK PLOTTED BY: ykim PLOT DATE: 02/08/2005 08:18:45 AM SHT. 1 OF 1

ISO TYPE: PT_STRESS C:\iso\tmp_conn_check.DGN

COMPUTER GENERATED - MANUAL CHANGES NOT PERMITTED

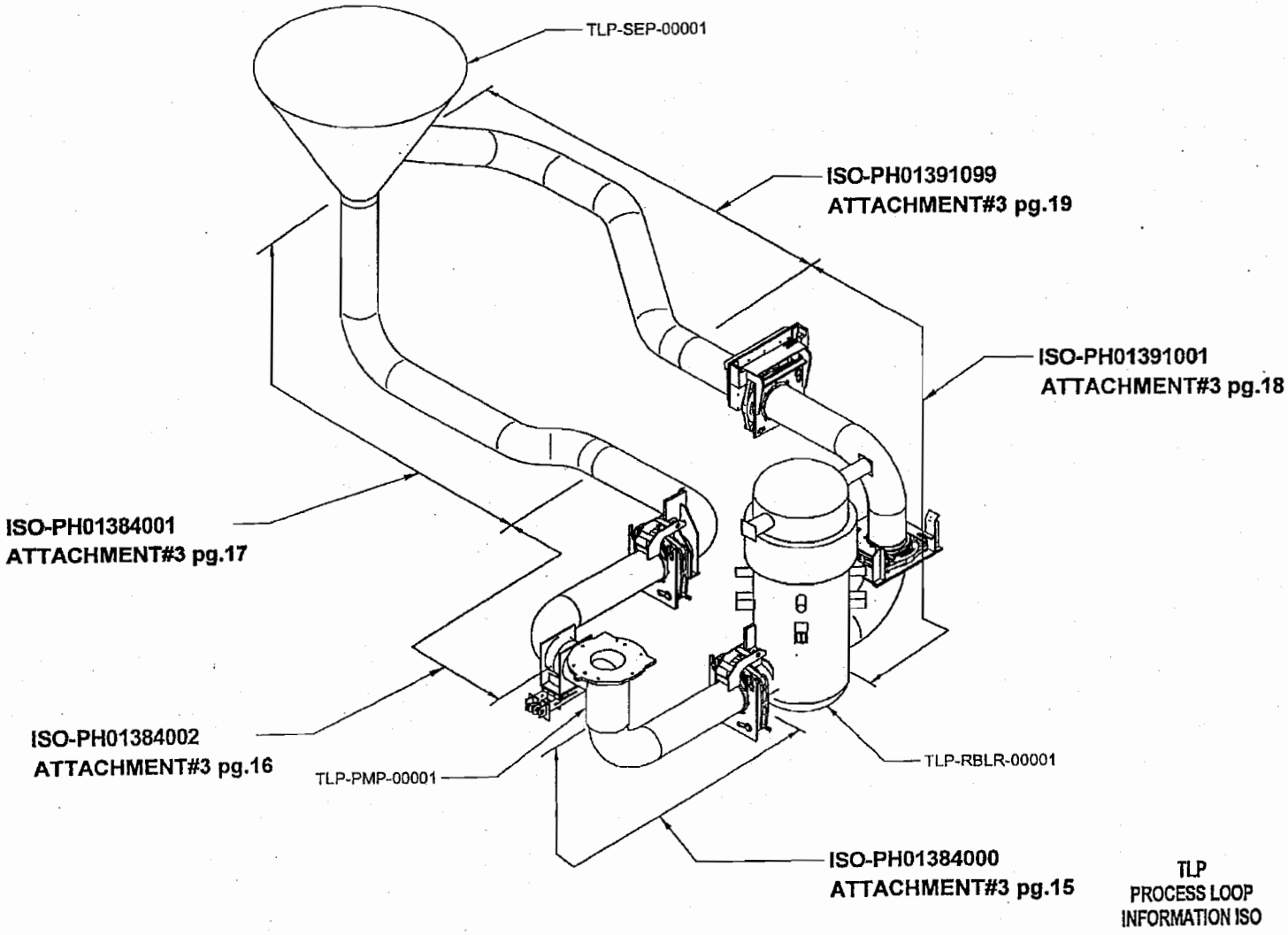
TLP-SEP-00001
ISO-PH01391099
ATTACHMENT#3 pg.19
ISO-PH01391001
ATTACHMENT#3 pg.18
ISO-PH01384001
ATTACHMENT#3 pg.17
ISO-PH01384002
ATTACHMENT#3 pg.16
TLP-PMP-00001
TLP-RBLR-00001
ISO-PH01384000
ATTACHMENT#3 pg.15
TLP
PROCESS LOOP
INFORMATION ISO

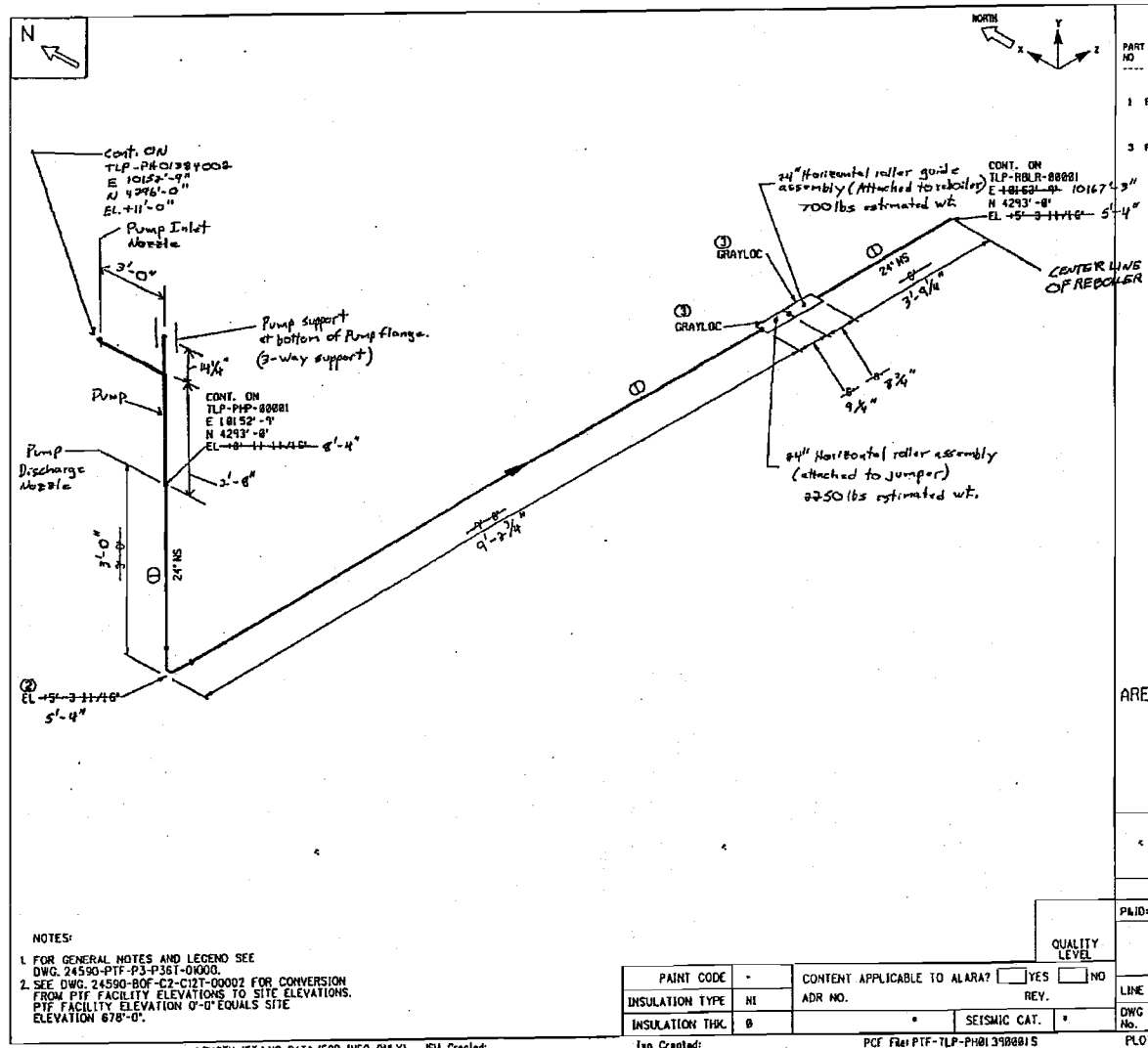

COMPUTER GENERATED - MANUAL CHANGES NOT PERMITTED

NOTES:

1. FOR GENERAL NOTES AND LEGEND SEE DWG. 24590-PTF-P3-P36T-01000.
2. SEE DWG. 24590-BOF-C2-C12T-00002 FOR CONVERSION FROM PTF FACILITY ELEVATIONS TO SITE ELEVATIONS. PTF FACILITY ELEVATION 0'-0" EQUALS SITE ELEVATION 678'-0".

SHOP MATERIALS

PART NO	COMPONENT DESCRIPTION	N.S. (INCHES)	QTY	BECHTEL STK CODE
	PIPE			
1	PIPE, A312TP316/316L, EFW, 0.375", BBE	24	8'8"	PPPC008L1V0C
	FITTINGS			
3	RCC (GRAYLOC)	24	1	N/A

AREA: 17

STRESS REVIEW PRINT	REV
☐ ACCEPTED	☐ NOT ACCEPTED
☐ ACCEPTED W/ COMMENTS	☐ SUPPORTS ADDED TO MODEL BY:
STRESS ANALYST:	DATE:

RIVER PROTECTION PROJECT
WASTE TREATMENT PLANT
2435 STEVENS CENTER PLACE
RICHLAND, WA 99352

CONTRACT No: DE-AC27-01RV14136

P&ID: NO DATA | CONST. WORK AREA: 21

PRETREATMENT FACILITY
ISOMETRIC

LINE No. TLP-PH-01390-S120-24 | PIPE SPEC: S12A

DWG No. 24590-PTF-P3-TLP-PH01390001-01390000 | REV A

PAINT CODE	-	CONTENT APPLICABLE TO ALARA? ☐ YES ☐ NO	QUALITY LEVEL
INSULATION TYPE	NI	ADR NO. REV.	
INSULATION THK.	0	SEISMIC CAT.	

LENGTH (FT.) NO DATA (FOR INFO ONLY) JSM Created: Iso Created: PCF File: PTF-TLP-PH01390001S PLOTTED BY: Irvincen PLOT DATE: 06/21/2006 08:09:48 AM SHT. 1 OF 1

Use view 1 to place fence for plotting to not print data fields

h:\STRESS\STRESS_150\jumper\Area_17\pif-tlp-ph01390001s.DGN

COMPUTER GENERATED - MANUAL CHANGES NOT PERMITTED

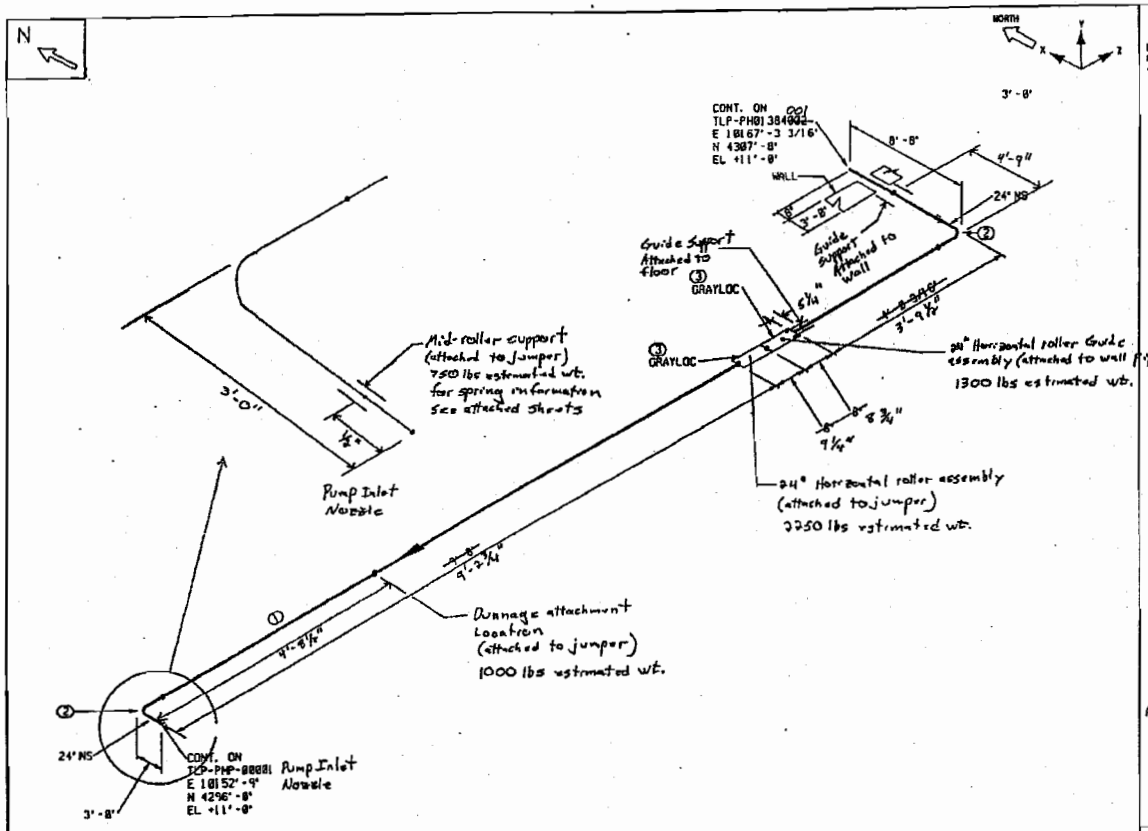

SHOP MATERIALS

PART NO	COMPONENT DESCRIPTION	N.S. (INCHES)	QTY	BECHTEL SIK CODE
	PIPE			
1	PIPE, A312TP304/304L, EFW, 0.375", BBE	24	8'4"	PPPCX80L1W0C
	FITTINGS			
2	EL - 90, LR, BW, A403WP304/304L-WX, 0.375"	24	2	PFONX60L240U
3	RCC (GRAYLOC)	24	1	N/A

AREA: 17

STRESS REVIEW PRINT	REV
☐ ACCEPTED	☐ NOT ACCEPTED
☐ ACCEPTED W/ COMMENTS	☐ SUPPORTS ADDED TO MODEL BY:
STRESS ANALYST:	DATE:

BECHTEL

RIVER PROTECTION PROJECT
WASTE TREATMENT PLANT
2435 STEVENS CENTER PLACE
RICHLAND, WA 99352

CONTRACT No: DE-AC27-01RV14136

P&ID: 24590-PTF-M6-TLP-00003 | CONST. WORK AREA: 21

PRETREATMENT FACILITY ISOMETRIC

LINE No. TLP-PH-01384-S12D-24 | PIPE SPEC: S12D

DWG No. 24590-PTF-P3-TLP-PH01384~~001~~002 | REV A

NOTES:

1. FOR GENERAL NOTES AND LEGEND SEE DWG. 24590-PTF-P3-P36T-01000.
2. SEE DWG. 24590-BOF-C2-C12T-00002 FOR CONVERSION FROM PTF FACILITY ELEVATIONS TO SITE ELEVATIONS. PTF FACILITY ELEVATION 0'-0" EQUALS SITE ELEVATION 678'-0".

PAINT CODE	-	CONTENT APPLICABLE TO ALARA? ☐ YES ☐ NO		
INSULATION TYPE	NI	ADR NO.	REV.	
INSULATION THK.	0	DL-2	SEISMIC CAT.	SC-III

QUALITY LEVEL

LENGTH (FT.) NO DATA (FOR INFO ONLY) JSM Created: Iso Created: PCF File: PTF-TLP-PH01384001S PLOTTED BY: lrvincen PLOT DATE: 06/21/2006 08:00:59 AM SHT. 1 OF 1

Use view 1 to place fence for plotting to not print data fields

h:\STRESS\STRESS_ISOjumper\Area_17\ptf-tlp-ph01384001s.DGN

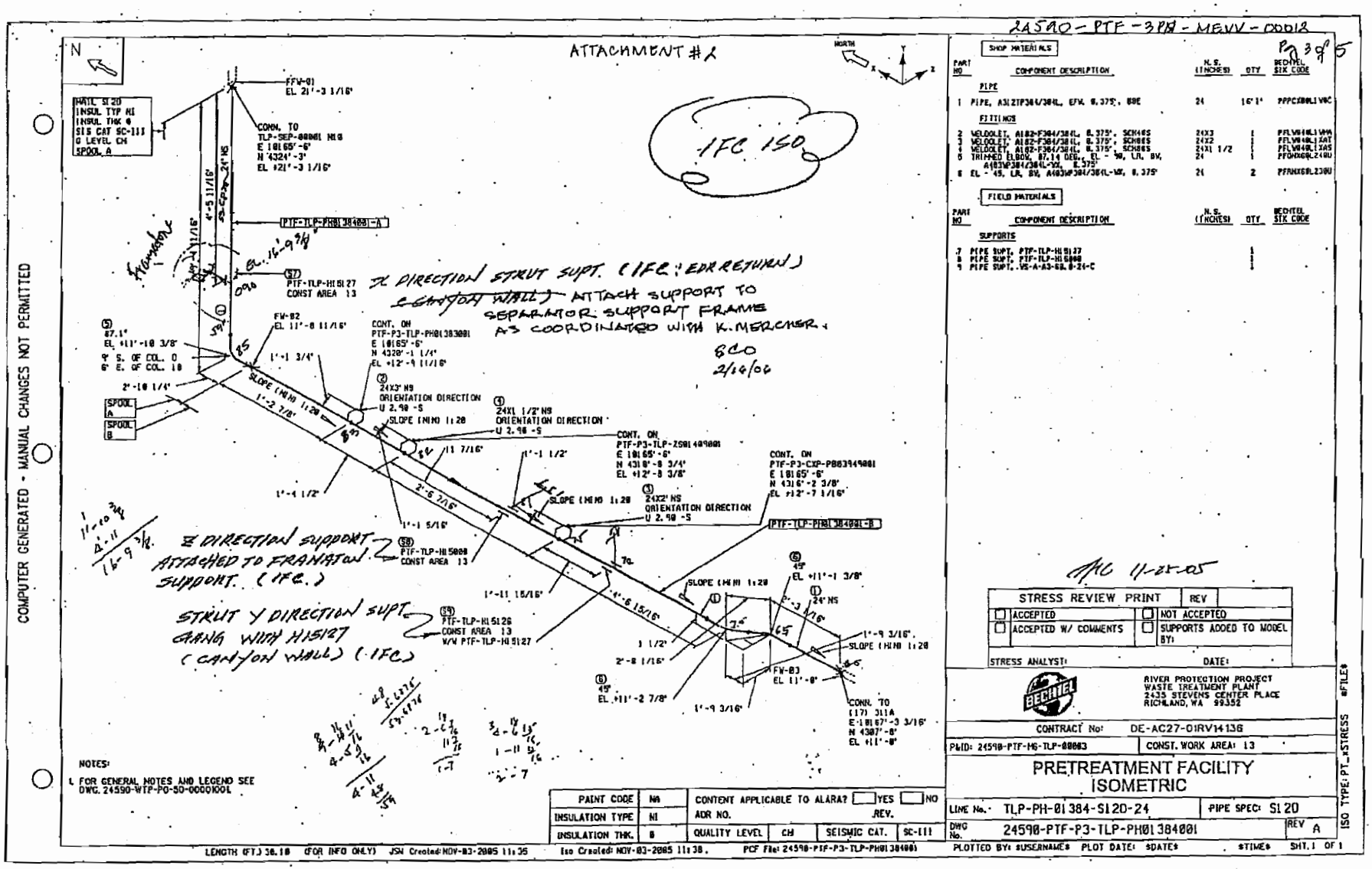
24590-PTF-3PS-MEVV-00012
ATTACHMENT #2
IFC ISO
X DIRECTION STRUT SUPT. (IFC: EDR RETURN)
ATTACH SUPPORT TO SEPARATOR SUPPORT FRAME AS COORDINATED WITH K. MERCHER.
Z DIRECTION SUPPORT ATTACHED TO FRANATON SUPPORT. (IFC.)
STRUT Y DIRECTION SUPT GANG WITH H15127 (CANYON WALL) (IFC)
SHOP MATERIALS
FIELD MATERIALS
STRESS REVIEW PRINT
ACCEPTED
NOT ACCEPTED
ACCEPTED W/ COMMENTS
SUPPORTS ADDED TO MODEL BY:
STRESS ANALYST:
DATE:
RIVER PROTECTION PROJECT
WASTE TREATMENT PLANT
2435 STEVENS CENTER PLACE
RICHLAND, WA 99352
CONTRACT No: DE-AC27-01RV14136
P&ID: 24590-PTF-M6-TLP-00003
CONST. WORK AREA: 13
PRETREATMENT FACILITY
ISOMETRIC
LINE No.: TLP-PH-01384-S12D-24
PIPE SPEC: S12D
DWG No. 24590-PTF-P3-TLP-PH01384001
REV A
PAINT CODE NA
INSULATION TYPE NI
INSULATION THK. 0
CONTENT APPLICABLE TO ALARA? YES NO
ADR NO.
REV.
QUALITY LEVEL CH
SEISMIC CAT. SC-III
NOTES:
1. FOR GENERAL NOTES AND LEGEND SEE DWG. 24590-WTP-PO-50-00001001
COMPUTER GENERATED - MANUAL CHANGES NOT PERMITTED
ISO TYPE: PT_xSTRESS
SHT. 1 OF 1

COMPUTER GENERATED - MANUAL CHANGES NOT PERMITTED

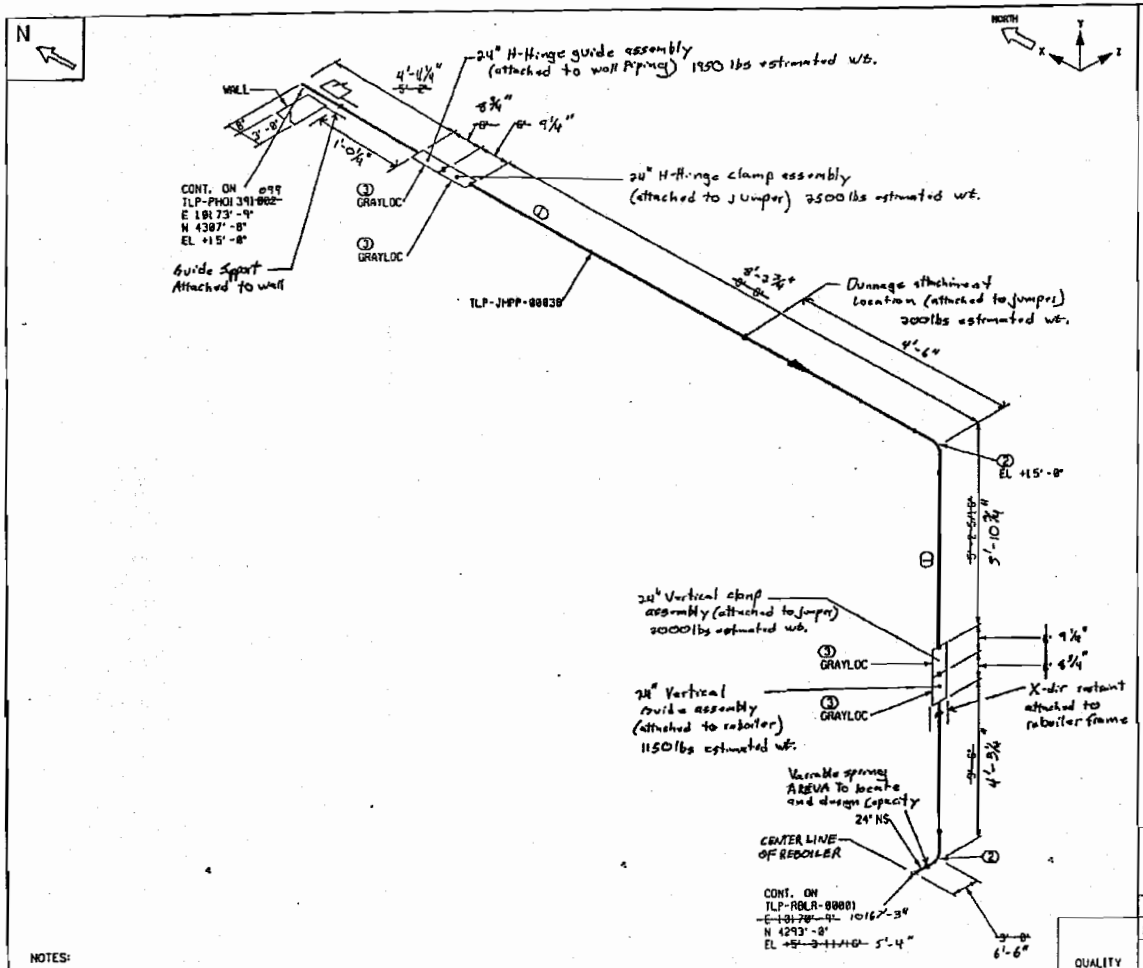

SHOP MATERIALS

PART NO	COMPONENT DESCRIPTION	N.S. (INCHES)	QTY	BECHTEL STK CODE
	PIPE			
1	PIPE, A312TP304/304L, EFW, 0.375", BBE	24	8'3"	PPPCX60L1W0C
	FITTINGS			
2	EL - 90, LR, BW, A403WP304/304L-WX, 0.375"	24	2	PFONX60L240U
3	RCC (GRAYLOC)	24	2	N/A

AREA: 17

STRESS REVIEW PRINT	REV
☐ ACCEPTED	☐ NOT ACCEPTED
☐ ACCEPTED W/ COMMENTS	☐ SUPPORTS ADDED TO MODEL BY:
STRESS ANALYST:	DATE:

RIVER PROTECTION PROJECT
WASTE TREATMENT PLANT
2435 STEVENS CENTER PLACE
RICHLAND, WA 99352

CONTRACT No: DE-AC27-01RV14136

P&ID: 24590-PTF-M6-TLP-00003 | CONST. WORK AREA: 21

PRETREATMENT FACILITY ISOMETRIC

LINE No. TLP-PH-01391-S12D-24 | PIPE SPEC: S12D

DWG No. 24590-PTF-P3-TLP-PH01391001 | REV A

PLOTTED BY: trvincen | PLOT DATE: 06/21/2006 | 09:43:41 AM | SHT. 1 OF 1

NOTES:

1. FOR GENERAL NOTES AND LEGEND SEE DWG. 24590-PTF-P3-P36T-01000.
2. SEE DWG. 24590-BOF-C2-C12T-00002 FOR CONVERSION FROM PTF FACILITY ELEVATIONS TO SITE ELEVATIONS. PTF FACILITY ELEVATION 0'-0" EQUALS SITE ELEVATION 678'-0".

PAINT CODE	-	CONTENT APPLICABLE TO ALARA? ☐ YES ☐ NO		
INSULATION TYPE	NI	ADR NO.	REV.	
INSULATION THK.	0	QL-2	SEISMIC CAT.	SC-III

QUALITY LEVEL

LENGTH (FT.) NO DATA (FOR INFO ONLY) JSM Created: | Iso Created: | PCF File: PTF-TLP-PH01391001S

Use view 1 to place fence for plotting to not print data fields

h:\STRESS\STRESS_ISOjumper\Area_17\ptf-tlp-ph01391001s.DGN

COMPUTER GENERATED - MANUAL CHANGES NOT PERMITTED

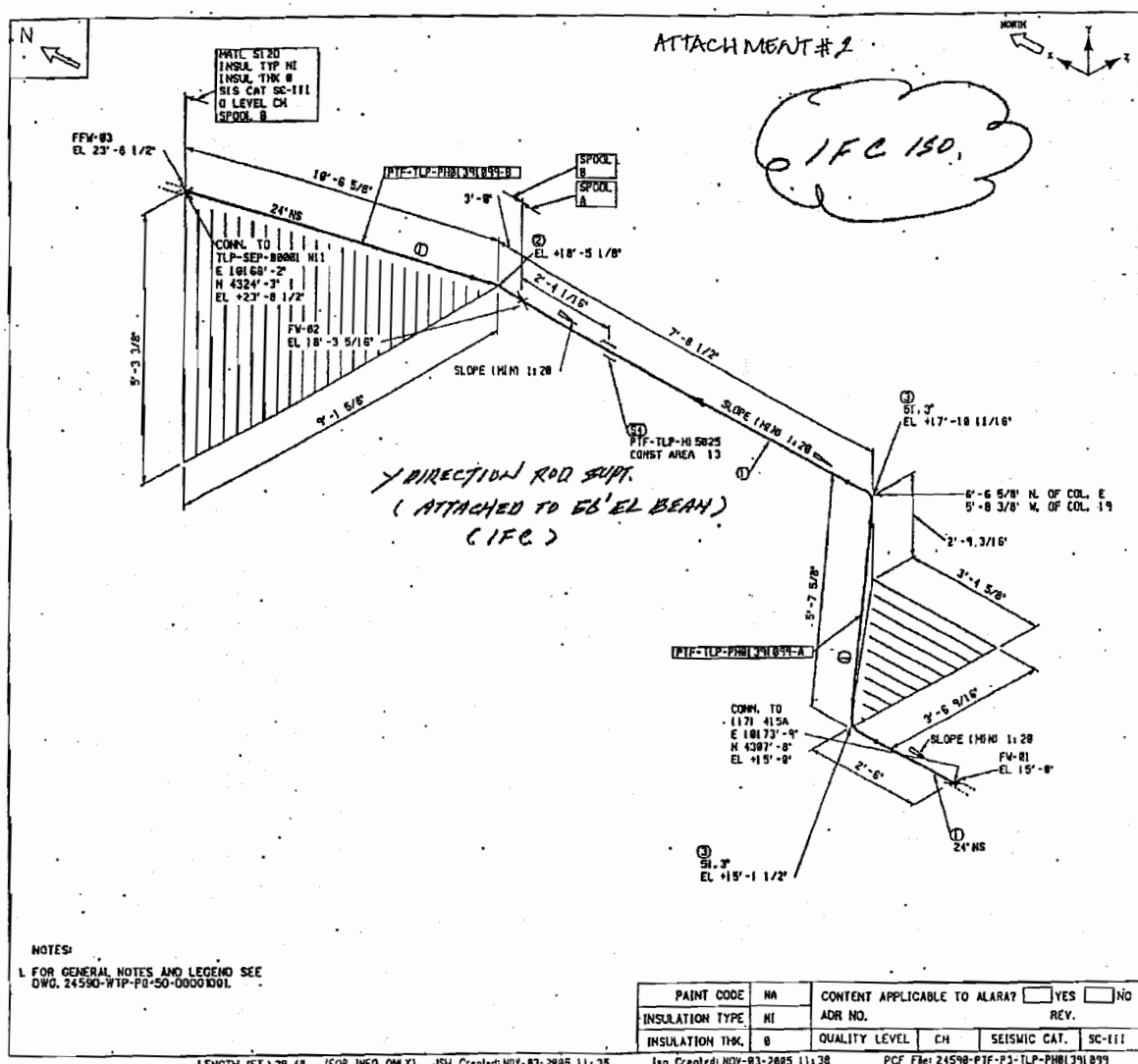

NOTES:

1. FOR GENERAL NOTES AND LEGEND SEE DWG. 24590-WTP-PO-50-00001001.

SHOP MATERIALS 24590-PTF-3PN-MEW-00012 Pg 5 of 5

PART NO	COMPONENT DESCRIPTION	N.S. (INCHES)	QTY	BECHTEL STK CODE
	PIPE			
1	PIPE, A312TP304/304L, EFW, 0.375", 086	24	17'-0"	PPPCX08L1W6C
	FITTINGS			
2	EL - 90, LR, BW, A403WP304/304L-WX, 0.375"	24	1	PFQHX08L24BU
3	TRIMMED ELBOW, 51.31 DEG., EL - 90, LR, BW, A403WP304/304L-WX, 0.375"	24	2	PFQHX08L24BU

FIELD MATERIALS

PART NO	COMPONENT DESCRIPTION	N.S. (INCHES)	QTY	BECHTEL STK CODE
	SUPPORTS			
4	PIPE SUPT, PTF-TLP-HI5025		1	

11-25-05

STRESS REVIEW PRINT	REV
☐ ACCEPTED	☐ NOT ACCEPTED
☐ ACCEPTED W/ COMMENTS	☐ SUPPORTS ADDED TO MODEL BY:
STRESS ANALYST:	DATE:

BECHTEL

RIVER PROTECTION PROJECT
WASTE TREATMENT PLANT
2435 STEVENS CENTER PLACE
RICHLAND, WA 99352

CONTRACT No: DE-AC27-01RV14136

P&ID: 24590-PTF-HG-TLP-00003 | CONST. WORK AREA: 13

PRETREATMENT FACILITY
ISOMETRIC

PAINT CODE	NA	CONTENT APPLICABLE TO ALARA? ☐ YES ☐ NO			
INSULATION TYPE	NI	ADR NO.		REV.	
INSULATION THK.	0	QUALITY LEVEL	CH	SEISMIC CAT.	SC-III

LINE No. TLP-PH-01391-S12D-24 | PIPE SPEC: S12D

DWG No. 24590-PTF-P3-TLP-PH01391099 | REV A

ISO TYPE: PT_*STRESS *FILE*

LENGTH (FT.) 29.48 (FOR INFO ONLY) JSW Created: NOV-03-2005 11:35 Iso Created: NOV-03-2005 11:38 PCF File: 24590-PTF-P3-TLP-PH01391099 PLOTTED BY: *USERNAME* PLOT DATE: *DATE* *TIME* SHT. 1 OF 1

24" Mid Roller Assembly.

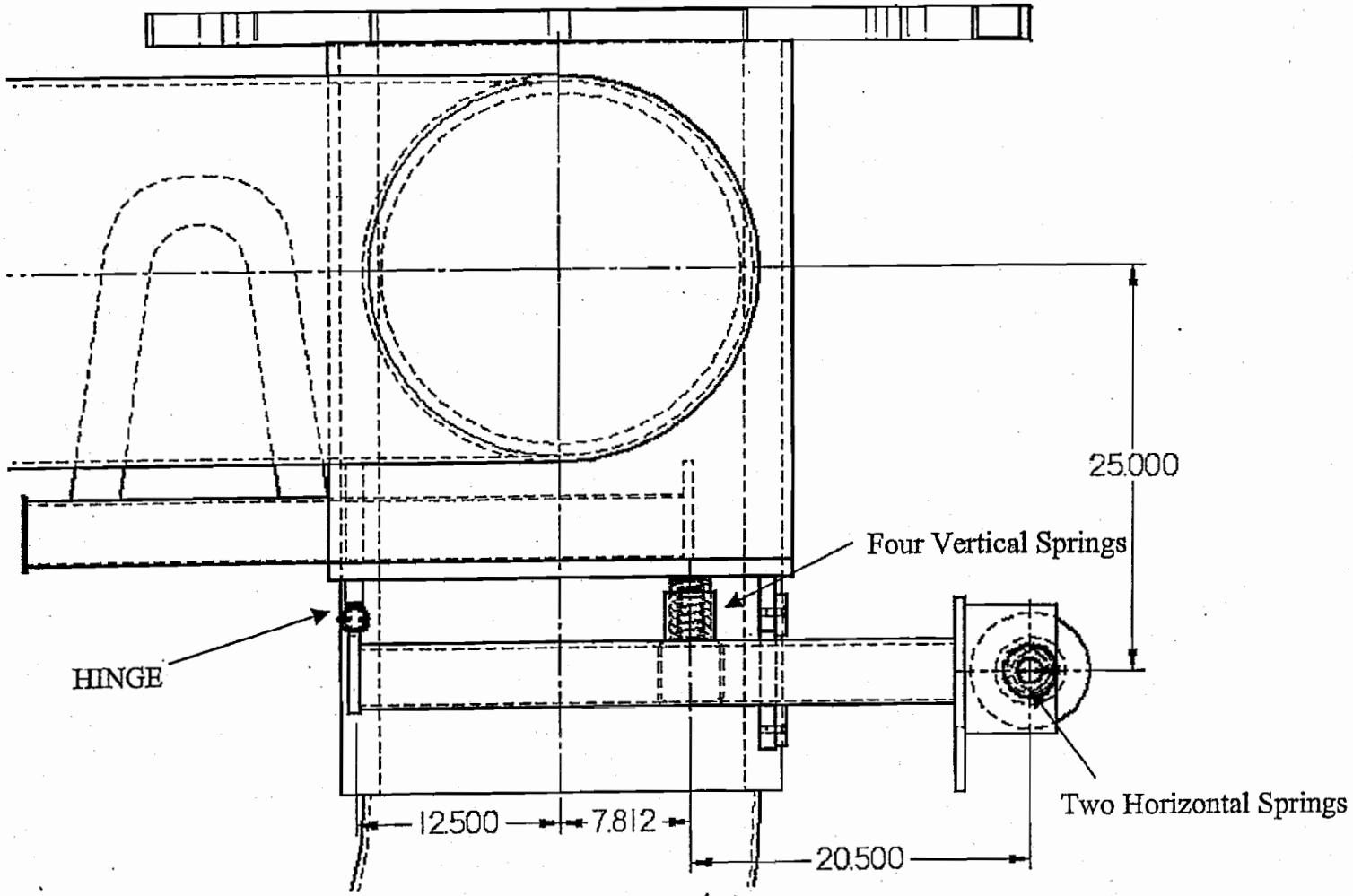

Note: Use Mid Roller Assembly spring configuration shown here for all Mid Roller Assemblies until finalized information is available.

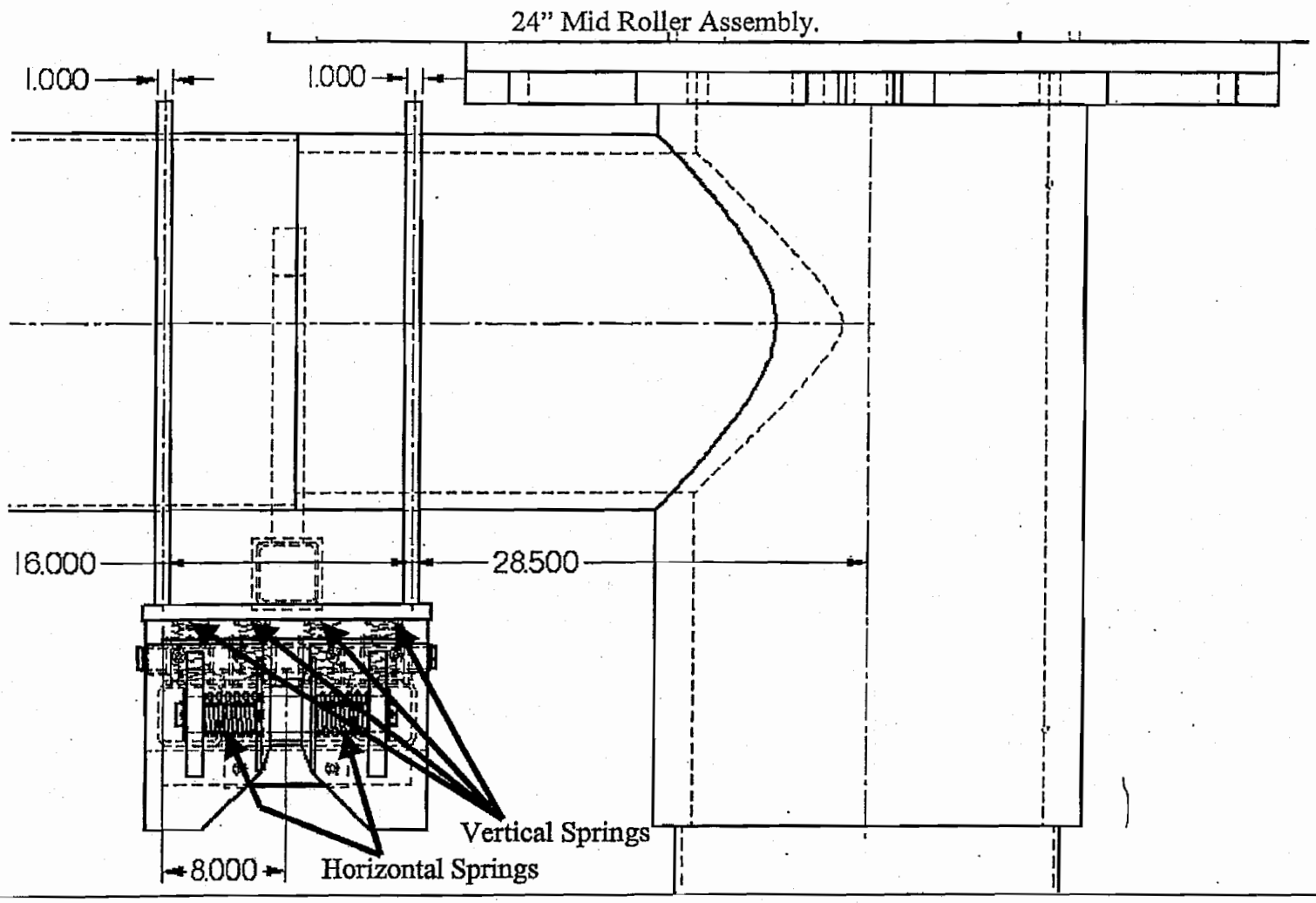

Vertical Spring:
•Spring Rate: 1310 lbs/in
•Preload: Four springs are compressed approximately 0.150" during installed cold condition. (Springs are in parallel)
Horizontal Spring (North-South):
•Spring Rate: 76 lbs/in
•Preload: 0.000" preload during the installed cold condition. (One spring acting in north direction, one acting spring in south direction)

ATTACHMENT # 4

Attached tables show the design load requirements for forces and moments applied to piping nozzles on separator vessels, ~~reboilers,~~ and condensers.

The direction of the listed forces and moments for vertical nozzles into the equipment head are provided in global coordinates (X = North/South, y = vertical, and z = East/West - Vessel 0° defined as North).

The directions of the listed forces and moments for horizontal nozzles into the equipment shell are provided in local coordinates per 24590-WTP-3PS-MV00-T0001.

FEP-SEP-00001A SC-I : TABLE 1

CCN 124031

Note:
*V = vertical head nozzle - values are x = North/South, y = vertical, z = East/West (global coordinates), Vessel 0° defined as North
**H = horizontal shell nozzle - values are per axes shown in 24590-WTP-3PS-MV00-T0001 Rev 2, Appendix A (local coordinates)

Nozzle Number	Nozzle Size (in)	Orientation (V* / H**)	Load Case	Design Loads (Force in lbs, Moment in ft-lb)					
				Fx	Fy	Fz	Mx	My	Mz
N01*	1	H	Weight	15	20	15	20	20	20
			Seismic	30	20	30	37	55	55
			Thermal	10	10	10	10	20	20
N02*	1	H	Weight	15	20	15	20	20	20
			Seismic	30	20	30	37	55	55
			Thermal	10	10	21	10	39	20
N03*	1	H	Weight	15	20	15	20	20	20
			Seismic	30	20	30	37	55	55
			Thermal	10	10	10	10	20	20
N04	30	H	Weight	By Vendor	By Vendor	By Vendor	By Vendor	By Vendor	By Vendor
			Seismic	By Vendor	By Vendor	By Vendor	By Vendor	By Vendor	By Vendor
			Thermal	By Vendor	By Vendor	By Vendor	By Vendor	By Vendor	By Vendor
N05	2	H	Weight	50	60	50	75	75	75
			Seismic	106	70	106	158	237	237
			Thermal	30	38	40	68	80	80
N07	1	H	Weight	15	20	15	20	20	20
			Seismic	30	20	30	37	55	55
			Thermal	10	12	10	10	20	32
N08*	1	H	Weight	15	20	15	20	20	20
			Seismic	30	20	30	37	55	55
			Thermal	10	10	10	10	20	20
N09*	1	H	Weight	15	20	15	20	20	20
			Seismic	30	20	30	37	55	55
			Thermal	10	10	10	10	20	20
N10[1]	24	V	Weight	Later	Later	Later	Later	Later	Later
			Seismic	Later	Later	Later	Later	Later	Later
			Thermal	Later	Later	Later	Later	Later	Later
N11[1]	24	H	Weight	Later	Later	Later	Later	Later	Later
			Seismic	Later	Later	Later	Later	Later	Later
			Thermal	Later	Later	Later	Later	Later	Later
~~N13~~	~~4~~	~~H~~	~~Weight~~	~~90~~	~~242~~	~~90~~	~~257~~	~~161~~	~~398~~
			~~Seismic~~	~~626~~	~~712~~	~~626~~	~~2220~~	~~3330~~	~~3330~~
			~~Thermal~~	~~80~~	~~70~~	~~110~~	~~270~~	~~640~~	~~540~~
N14	2	H	Weight	50	64	50	75	75	188
			Seismic	106	189	106	158	237	593
			Thermal	86	33	46	94	154	80
N17	2	H	Weight	50	60	50	75	75	88
			Seismic	106	106	106	158	237	254
			Thermal	159	30	67	40	236	80
N19	1	H	Weight	15	20	15	20	20	20
			Seismic	33	29	55	37	55	55
			Thermal	16	13	25	10	20	20

2 of 3

1. Values to be provided later upon completion of piping analysis.

FEP-SEP-00001A SC-I : TABLE 1 (CONT.) CCN 124031

Note:
*V = vertical head nozzle - values are x = North/South, y = vertical, z = East/West (global coordinates), Vessel 0° defined as North
**H = horizontal shell nozzle - values are per axes shown in 24590-WTP-3PS-MV00-T0001 Rev 2, Appendix A (local coordinates)

Nozzle Number	Nozzle Size (in)	Orientation (V* / H**)	Load Case	Design Loads (Force in lbs, Moment in ft-lb)					
				Fx	Fy	Fz	Mx	My	Mz
N21*	1	H	Weight	15	20	15	20	20	20
			Seismic	30	20	30	37	55	55
			Thermal	10	10	10	10	20	20
N22	1	H	Weight	15	20	15	20	20	20
			Seismic	30	21	30	37	55	55
			Thermal	10	21	10	10	20	20
N23	1	H	Weight	15	20	15	20	20	20
			Seismic	30	23	30	37	55	55
			Thermal	10	10	10	10	20	20
N24	1	H	Weight	15	20	15	20	20	20
			Seismic	30	20	30	37	55	55
			Thermal	10	10	10	10	20	20
N25	1	H	Weight	15	20	15	20	20	20
			Seismic	30	23	30	37	73	55
			Thermal	10	10	10	10	20	20
N27*	1	H	Weight	15	20	15	20	20	20
			Seismic	30	20	30	37	55	55
			Thermal	10	10	10	10	20	20
N28*	1	H	Weight	15	20	15	20	20	20
			Seismic	30	20	30	37	55	55
			Thermal	12	10	10	10	20	20
N30	24	Manway	Weight	Manway	Manway	Manway	Manway	Manway	Manway
			Seismic	Manway	Manway	Manway	Manway	Manway	Manway
			Thermal	Manway	Manway	Manway	Manway	Manway	Manway
N32 Spare	1	H	Weight	15	20	15	20	20	20
			Seismic	30	20	30	37	55	55
			Thermal	10	10	10	10	20	20

*Nozzle loads for these bubblers due to hydrogen accumulation are not available and will be provided later.

Revised Nozzle N13 Loads (Ref. CCN 172485)

FEP A/B Separators (FEP-SEP-00001A/1B): Both nozzles

				Design Loads (Force in lbs, Moment in ft-lb)					
				Fx	Fy	Fz	Mx	My	Mz
N13	4	H	Weight	115	250	115	300	180	400
			Seismic	307	182	274	1156	1320	1320
			Thermal	90	120	120	425	540	540

3 of 3

1. Values to be provided later upon completion of piping analysis.

FEP-SEP-00001B SC-I : TABLE 2

CCN 124032

Note:
*V = vertical head nozzle - values are x = North/South, y = vertical, z = East/West (global coordinates), Vessel 0° defined as North
**H = horizontal shell nozzle - values are per axes shown in 24590-WTP-3PS-MV00-T0001 Rev 2, Appendix A (local coordinates)

Nozzle Number	Nozzle Size (in)	Orientation (V* / H**)	Load Case	Design Loads (Force in lbs, Moment in ft-lb)					
				Fx	Fy	Fz	Mx	My	Mz
N01*	1	H	Weight	15	20	15	20	20	20
			Seismic	30	20	30	37	55	55
			Thermal	10	10	10	10	20	20
N02*	1	H	Weight	15	20	15	20	20	20
			Seismic	30	20	30	37	55	55
			Thermal	10	10	10	10	20	20
N03*	1	H	Weight	15	20	15	20	20	20
			Seismic	30	20	30	37	55	55
			Thermal	10	10	10	10	20	20
N04	30	H	Weight	By Vendor	By Vendor	By Vendor	By Vendor	By Vendor	By Vendor
			Seismic	By Vendor	By Vendor	By Vendor	By Vendor	By Vendor	By Vendor
			Thermal	By Vendor	By Vendor	By Vendor	By Vendor	By Vendor	By Vendor
N05	2	H	Weight	50	60	50	75	75	75
			Seismic	106	70	106	158	237	237
			Thermal	30	30	40	40	80	80
N07	1	H	Weight	15	20	15	20	20	20
			Seismic	33	20	30	37	55	55
			Thermal	10	20	10	10	20	48
N08*	1	H	Weight	15	20	15	20	20	20
			Seismic	30	20	30	37	55	55
			Thermal	10	10	10	10	20	20
N09*	1	H	Weight	15	20	15	20	20	20
			Seismic	30	20	30	37	55	55
			Thermal	10	10	10	10	20	20
N10[1]	24	V	Weight	Later	Later	Later	Later	Later	Later
			Seismic	Later	Later	Later	Later	Later	Later
			Thermal	Later	Later	Later	Later	Later	Later
N11[1]	24	H?	Weight	Later	Later	Later	Later	Later	Later
			Seismic	Later	Later	Later	Later	Later	Later
			Thermal	Later	Later	Later	Later	Later	Later
~~N13~~	~~4~~	~~H~~	~~Weight~~	~~90~~	~~215~~	~~90~~	~~257~~	~~161~~	~~347~~
			~~Seismic~~	~~626~~	~~418~~	~~626~~	~~2220~~	~~3330~~	~~3330~~
			~~Thermal~~	~~80~~	~~70~~	~~116~~	~~407~~	~~540~~	~~540~~
N14	2	H	Weight	50	64	50	75	75	142
			Seismic	106	70	106	201	237	237
			Thermal	69	33	40	70	118	80
N17	2	H	Weight	50	60	50	75	75	80
			Seismic	106	70	106	188	237	237
			Thermal	158	30	53	40	298	80
N19	1	H	Weight	15	20	15	20	20	20
			Seismic	39	20	38	37	55	55
			Thermal	14	10	15	10	20	20

1. Values to be provided later upon completion of piping analysis.

2 of 3

FEP-SEP-00001B SC-I : TABLE 2 (cont.)

CCN 124032

Note:
*V = vertical head nozzle - values are x = North/South, y = vertical, z = East/West (global coordinates), Vessel 0° defined as North
**H = horizontal shell nozzle - values are per axes shown in 24590-WTP-3PS-MV00-T0001 Rev 2, Appendix A (local coordinates)

Nozzle Number	Nozzle Size (in)	Orientation (V* / H**)	Load Case	Design Loads (Force in lbs, Moment in ft-lb)					
				Fx	Fy	Fz	Mx	My	Mz
N21*	1	H	Weight	15	20	15	20	20	20
			Seismic	30	21	30	37	55	55
			Thermal	10	10	10	10	20	20
N22	1	H	Weight	15	20	15	20	20	20
			Seismic	30	20	30	37	55	55
			Thermal	10	20	10	10	20	20
N23	1	H	Weight	15	20	15	20	20	20
			Seismic	30	21	30	37	55	55
			Thermal	10	10	10	10	20	20
N24	1	H	Weight	15	20	15	20	20	20
			Seismic	30	20	30	37	55	55
			Thermal	10	10	10	10	20	20
N25	1	H	Weight	15	20	15	20	20	20
			Seismic	30	20	30	37	55	55
			Thermal	10	10	10	10	20	20
N27*	1	H	Weight	15	20	15	20	20	20
			Seismic	30	20	30	37	55	55
			Thermal	10	10	10	10	20	20
N28*	1	H	Weight	15	20	15	20	20	20
			Seismic	30	20	30	37	55	55
			Thermal	10	10	10	10	20	20
N30	24	Manway	Weight	Manway	Manway	Manway	Manway	Manway	Manway
			Seismic	Manway	Manway	Manway	Manway	Manway	Manway
			Thermal	Manway	Manway	Manway	Manway	Manway	Manway
N32 Spare	1	H	Weight	15	20	15	20	20	20
			Seismic	30	20	30	37	55	55
			Thermal	10	10	10	10	20	20

* Nozzle loads for these bubblers due to hydrogen accumulation are not available and will be provided later.

Revised Nozzle N13 Loads (Ref. CCN 172485)

FEP A/B Separators (FEP-SEP-00001A/1B): Both nozzles

				Design Loads (Force in lbs, Moment in ft-lb)					
				Fx	Fy	Fz	Mx	My	Mz
N13	4	H	Weight	115	250	115	300	180	400
			Seismic	307	182	274	1156	1320	1320
			Thermal	90	120	120	425	540	540

3 of 3

1. Values to be provided later upon completion of piping analysis.

TLP-SEP-00001 SC-I : TABLE 3

CCN 139984

Note:
*V = vertical head nozzle - values are x = North/South, y = vertical, z = East/West (global coordinates), Vessel 0° defined as North
**H = horizontal shell nozzle - values are per axes shown in 24590-WTP-3PS-MV00-T0001 Rev 2, Appendix A (local coordinates)

Nozzle Number	Nozzle Size (in)	Orientation (V* / H*)	Load Case	Design Loads (Force in lbs, Moment in ft-lb)					
				Fx	Fy	Fz	Mx	My	Mz
N01*	1	H	Weight	15	20	15	20	20	20
			Seismic	69	21	30	37	55	69
			Thermal	20	37	20	33	30	55
N02*	1	H	Weight	15	24	15	20	20	25
			Seismic	117	28	46	43	55	117
			Thermal	20	10	20	20	30	30
N03*	1	H	Weight	15	20	15	20	20	23
			Seismic	60	26	30	37	78	60
			Thermal	20	10	20	20	30	30
N04	30	Vendor	Weight	Vendor	Vendor	Vendor	Vendor	Vendor	Vendor
			Seismic						
			Thermal						
N07	1	H	Weight	15	20	15	20	20	20
			Seismic	30	20	30	37	55	55
			Thermal	20	13	20	20	30	30
N08*	1	H	Weight	15	28	15	29	20	49
			Seismic	64	32	30	42	59	64
			Thermal	20	12	20	20	30	30
N09*	1	H	Weight	15	21	15	20	20	42
			Seismic	89	33	64	37	145	89
			Thermal	20	10	20	20	30	30
N10	24	V	Weight	Later	Later	Later	Later	Later	Later
			Seismic						
			Thermal						
N11	24	H	Weight	Later	Later	Later	Later	Later	Later
			Seismic						
			Thermal						
~~N13~~	~~4~~	~~H~~	~~Weight~~	~~87~~	~~281~~	~~87~~	~~216~~	~~142~~	~~748~~
			~~Seismic~~	~~1722~~	~~641~~	~~274~~	~~878~~	~~1320~~	~~1722~~
			~~Thermal~~	~~150~~	~~240~~	~~200~~	~~480~~	~~950~~	~~950~~
N14	2	H	Weight	50	60	50	75	75	89
			Seismic	162	70	106	158	237	237
			Thermal	115	40	60	70	130	130
N17	2	H	Weight	50	60	50	75	75	75
			Seismic	106	70	106	158	237	237
			Thermal	136	81	60	75	130	130
N19	1	H	Weight	15	20	15	20	20	20
			Seismic	30	20	30	37	55	55
			Thermal	20	10	20	20	30	30

TLP-SEP-00001 SC-I : TABLE 3 (CONT.)

CCN 139984

Note:
*V = vertical head nozzle - values are x = North/South, y = vertical, z = East/West (global coordinates), Vessel 0° defined as North
**H = horizontal shell nozzle - values are per axes shown in 24590-WTP-3PS-MV00-T0001 Rev 2, Appendix A (local coordinates)

Nozzle Number	Nozzle Size (in)	Orientation (V* / H*)	Load Case	Design Loads (Force in lbs, Moment in ft-lb)					
				Fx	Fy	Fz	Mx	My	Mz
N21 *	1	H	Weight	15	20	15	20	20	20
			Seismic	30	20	30	37	55	55
			Thermal	20	10	20	20	30	30
N22	1	H	Weight	15	20	15	20	20	20
			Seismic	30	20	30	37	55	55
			Thermal	20	12	20	20	30	30
N23	1	H	Weight	15	20	15	20	20	20
			Seismic	30	20	30	37	55	55
			Thermal	20	23	20	20	30	30
N24	1	H	Weight	15	20	15	20	20	36
			Seismic	77	26	34	37	85	77
			Thermal	20	11	20	20	30	30
N25	1	H	Weight	15	20	15	20	20	20
			Seismic	41	20	30	37	62	55
			Thermal	20	10	20	20	30	30
N27 *	1	H	Weight	15	20	15	20	20	20
			Seismic	30	20	30	37	55	55
			Thermal	20	15	20	20	30	30
N28 *	1	H	Weight	15	20	15	20	20	20
			Seismic	30	20	30	37	55	55
			Thermal	20	10	20	20	30	30

* Nozzle loads for these bubblers due to hydrogen accumulation are not available and will be provided later.

Revised Nozzle N13 Loads (Ref. CCN 172485)

TLP Separator (TLP-SEP-000001)

				Design Loads (Force in lbs, Moment in ft-lb)					
				Fx	Fy	Fz	Mx	My	Mz
N13	4	H	Weight	115	280	115	288	180	743
			Seismic	365	243	365	585	880	880
			Thermal	244	140	200	315	630	630

TABLE 4 *

PRELIMINARY Nozzle Loads on Non-Black Cell Vessels Designated as SC-1 **							
Pipe Size	Load Type	Forces			Moments		
		Fx (lb)	Fy (lb)	Fz (lb)	Mx (ft-lb)	My (ft-lb)	Mz (ft-lb)
1 in	Weight	15	20	15	20	20	20
1 in	Seismic	45	30	45	56	83	83
1 in	Thermal	30	26	40	38	77	77
1-1/2 in	Weight	35	45	35	40	40	40
1-1/2 in	Seismic	90	60	90	137	206	206
1-1/2 in	Thermal	64	56	86	96	192	192
2 in	Weight	50	60	50	75	75	75
2 in	Seismic	159	105	159	237	356	356
2 in	Thermal	114	100	152	169	337	337
3 in	Weight	69	111	69	158	99	99
3 in	Seismic	323	215	323	935	1401	1401
3 in	Thermal	228	203	305	664	1330	1330
4 in	Weight	116	186	116	288	180	180
4 in	Seismic	548	365	548	1755	2640	2640
4 in	Thermal	393	350	524	1260	2520	2520
6 in	Weight	279	446	279	797	498	498
6 in	Seismic	1326	885	1326	4845	7275	7275
6 in	Thermal	980	872	1310	3580	7160	7160
8 in	Weight	311	497	311	988	618	618
8 in	Seismic	1467	980	1467	5895	8835	8835
8 in	Thermal	1190	1060	1590	4800	9590	9590
10 in	Weight	351	561	351	1880	1180	1180
10 in	Seismic	1635	1092	1635	11010	16500	16500
10 in	Thermal	1270	1130	1690	8500	17000	17000
12 in	Weight	485	776	485	2710	1700	1700
12 in	Seismic	2265	1515	2265	15750	23700	23700
12 in	Thermal	1780	1580	2370	12400	24800	24800
14 in	Weight	581	930	581	3320	2080	2080
14 in	Seismic	2700	1800	2700	18900	28350	28350
14 in	Thermal	2140	1900	2860	15000	30100	30100
16 in	Weight	729	1170	729	4170	2610	2610
16 in	Seismic	3420	2280	3420	24150	36300	36300
16 in	Thermal	2800	2490	3730	19800	39500	39500
18 in	Weight	911	1460	911	5070	3170	3170
18 in	Seismic	4230	2820	4230	30000	44850	44850
18 in	Thermal	3550	3160	4730	25200	50300	50300
20 in	Weight	1120	1790	1120	6310	3950	3950
20 in	Seismic	5100	3405	5100	35850	53700	53700
20 in	Thermal	4440	3950	5920	31200	62400	62400
22 in	Weight	1340	2150	1340	7300	4560	4560
22 in	Seismic	6045	4035	6045	42150	63300	63300
22 in	Thermal	5430	4830	7240	37900	75800	75800
24 in	Weight	1570	2510	1570	8510	5320	5320
24 in	Seismic	7065	4710	7065	48600	73050	73050
24 in	Thermal	6560	5840	8750	45200	90400	90400

* Reference CCN 186790

** Note: Nozzle loads provided in Table 4 are for condensers and ejectors. For reboilers, please refer to Attachment # 9 of this appendix.

TABLE 5: **DELETED**

ATTACHMENT #5

Design Concepts

Design Concepts

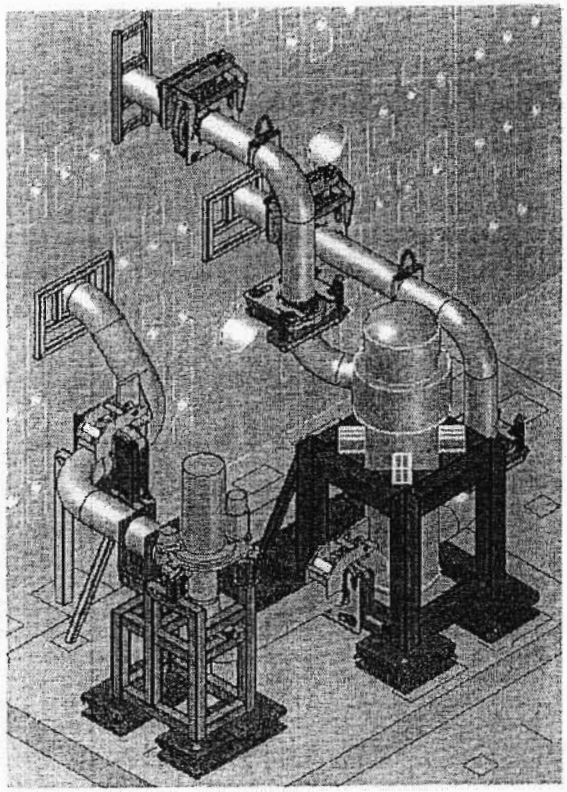

Area 9
CNP

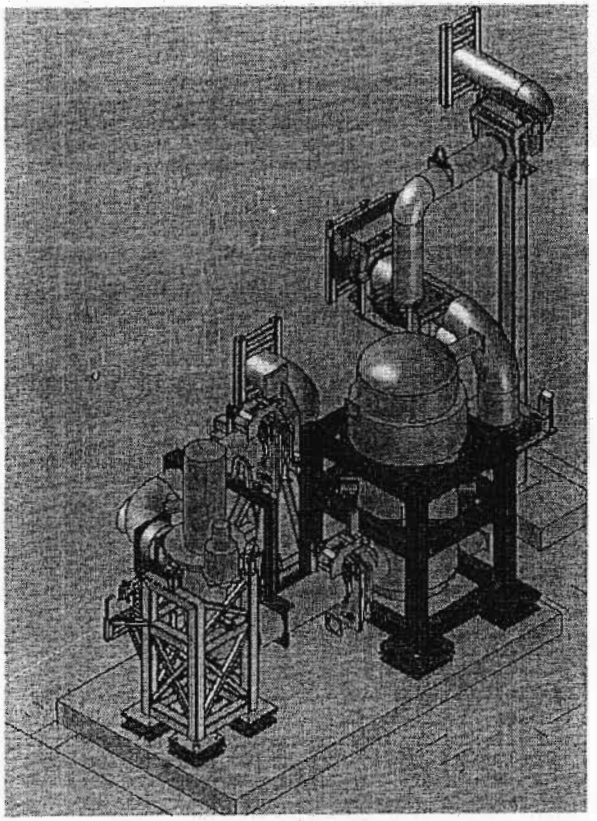

Area 17
TLP

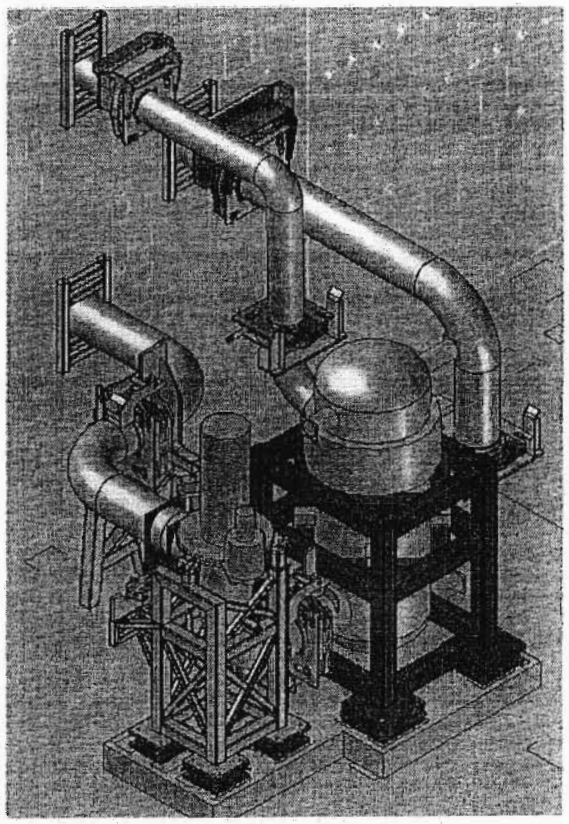

Area 26/27
FEP

Assumptions

- Top of concrete pad elevation will be 1'-4"
- Concrete pad will be rigid, e.g. 33 hz
- Bottom of Pump and Reboiler frames/top of remote interface will be 2'-2". With the exception of the FEP and TLP Reboilers, which will be 2'-2 5\16".
- AREVA will qualify Structural steel between 1'-4" and 2'-2", BNI will be responsible for remotability interface and fabrication drawings. Structural members will be same size as Reboiler and Pump frames or larger, see attached.
- There will be two 4" Dowel Pins per frame (opposing corners) as shown on drawings which will take the sheer loads.

Assumptions

- AREVA to qualify all plates, structural steel, dowel pins and the bolting interface.
- Initial assumption, bolts will be 1.25" diameter with two bolts per plate. Final diameter / quantity will be determined by analysis. Note: Max available torque from impact wrench is 400 ft-lbs
- AREVA to determine final dowel pin diameter and final number of bolts required. Note: Two dowel pins are required due to remote handling constraints.
- AREVA to qualify pump frame, BNI will be responsible for remotability interface and fabrication drawings.

Area 17 (TLP)
Design Concepts

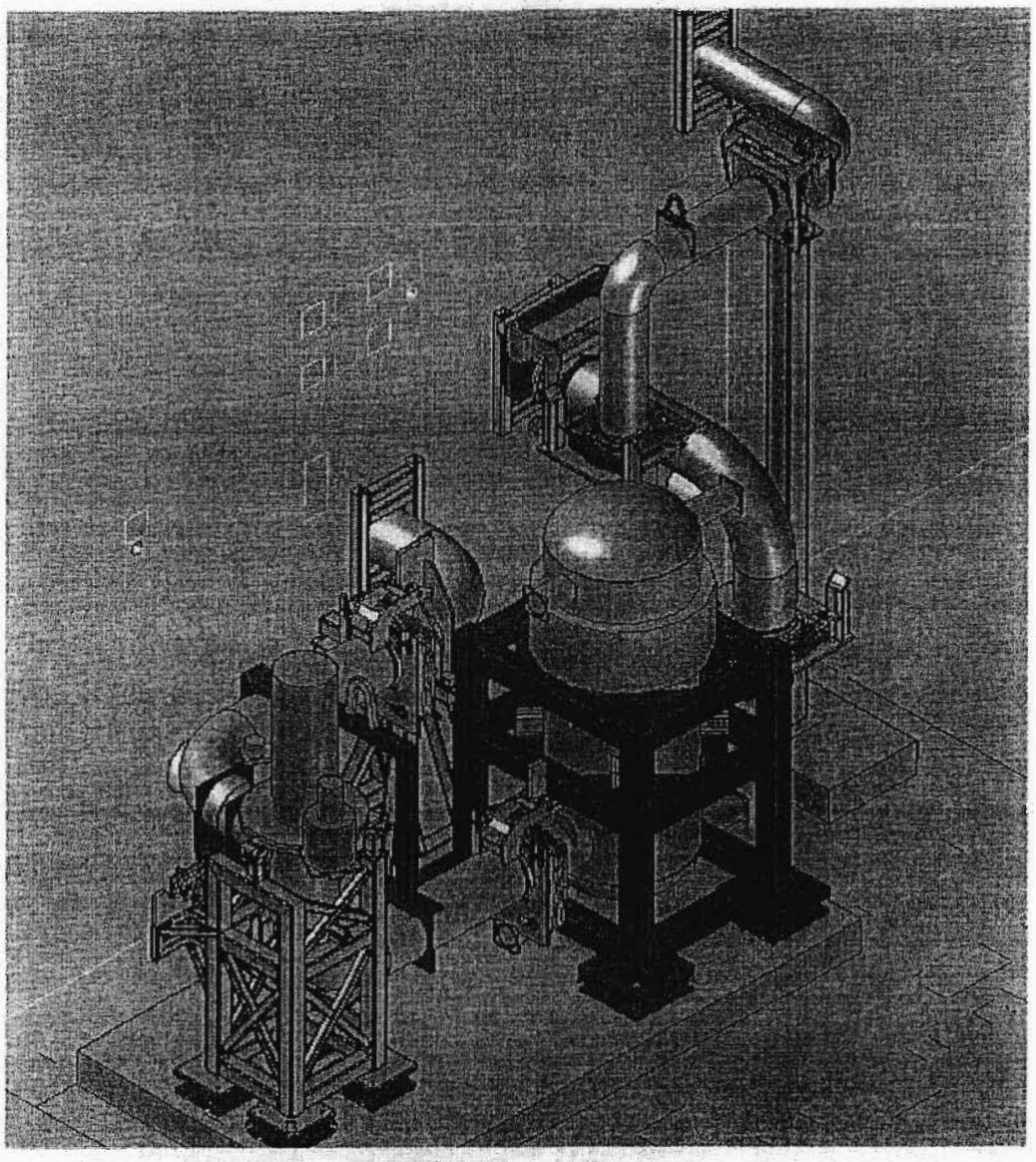

Current Layout

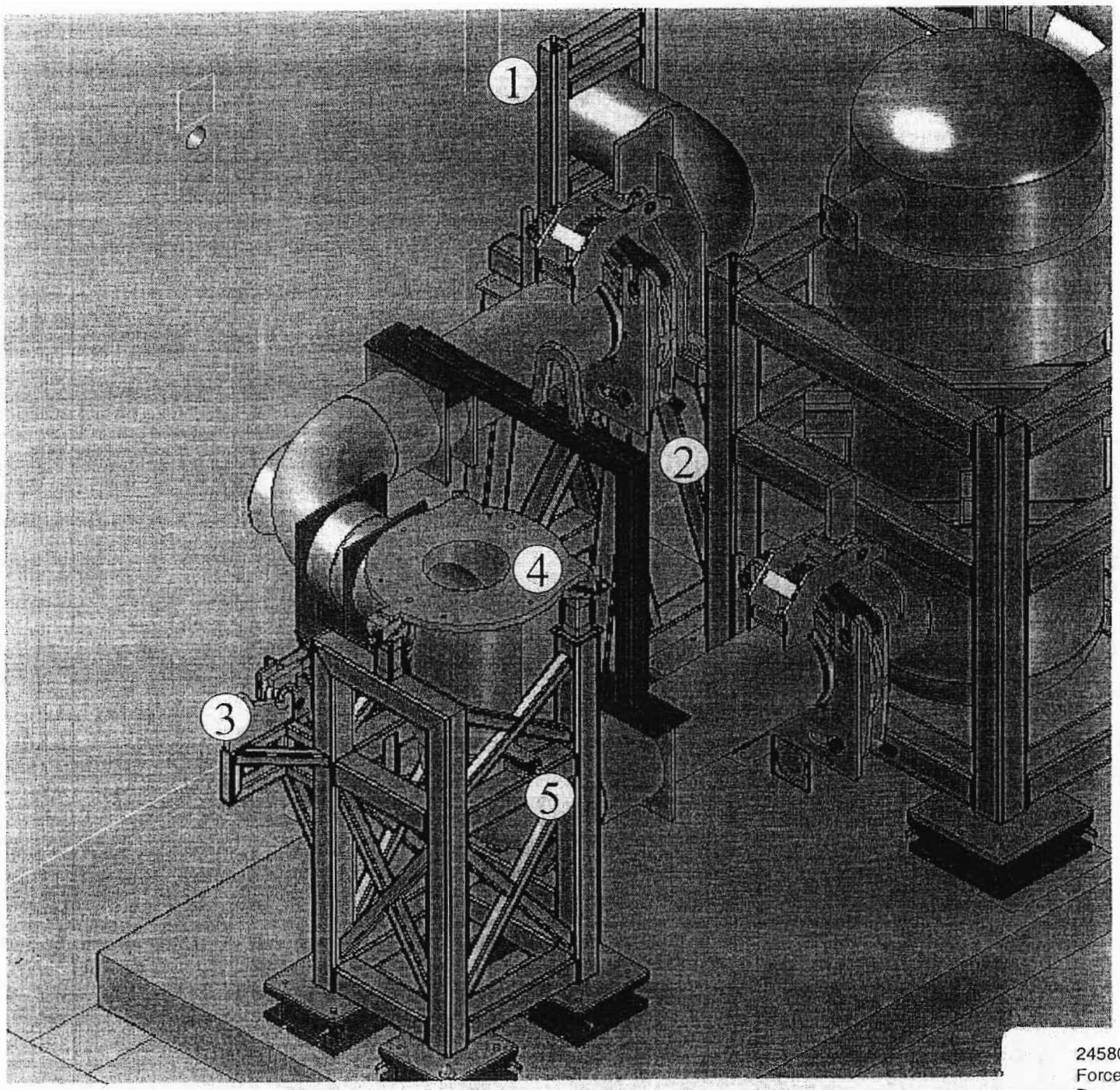

Proposed Support Configuration (TLP)

See corresponding details on following slides.

TLP

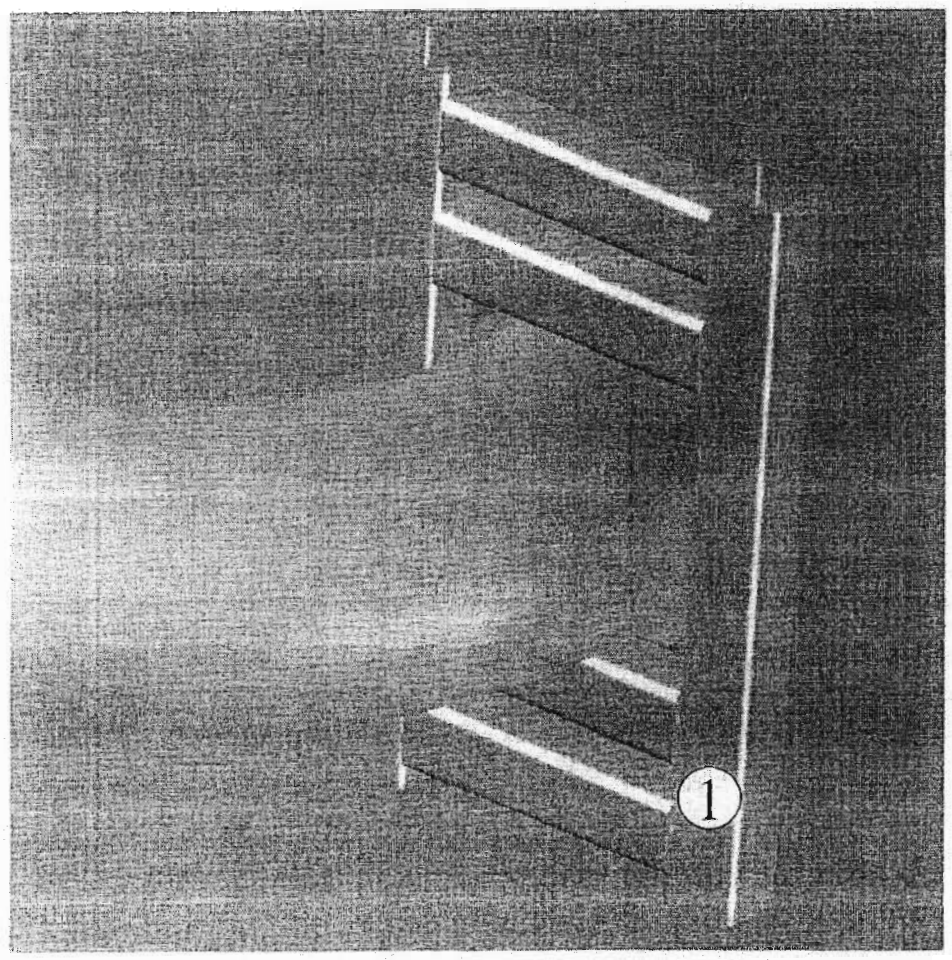

Guide supports at face of hot cell wall

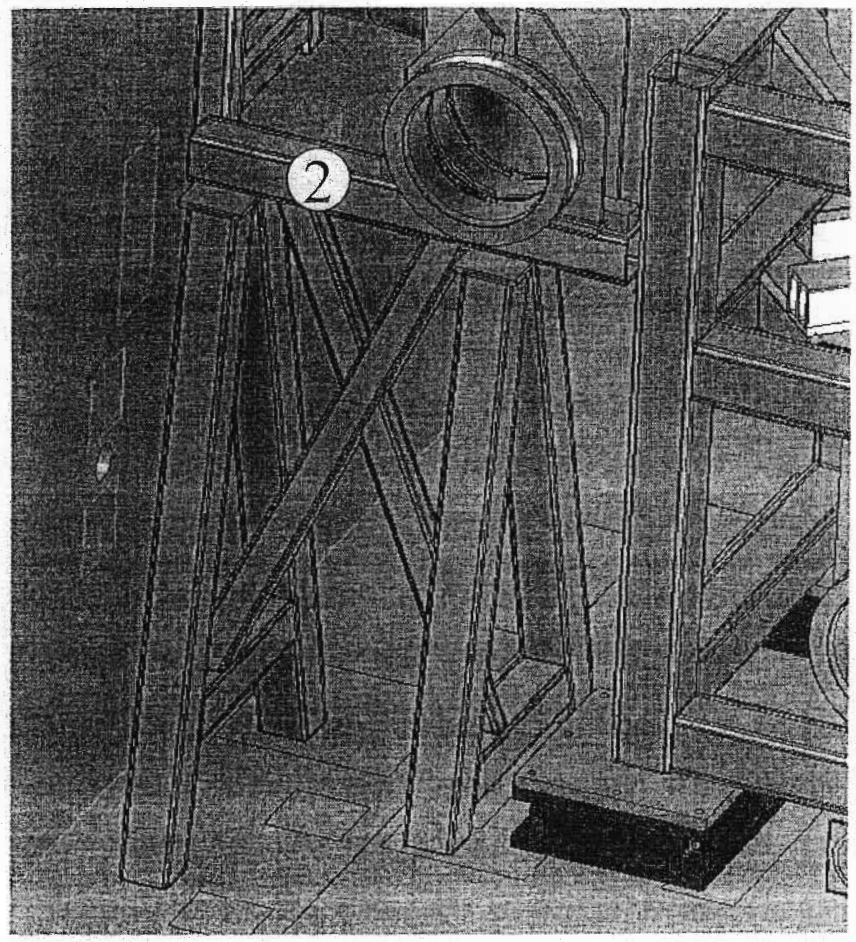

Guide support on back side of wall Grayloc hub.

TLP

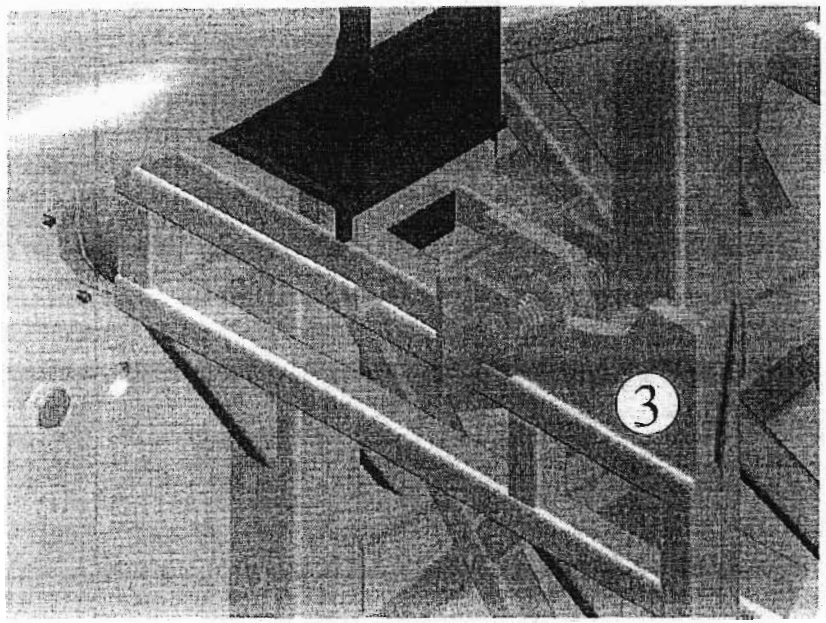

Midroller support

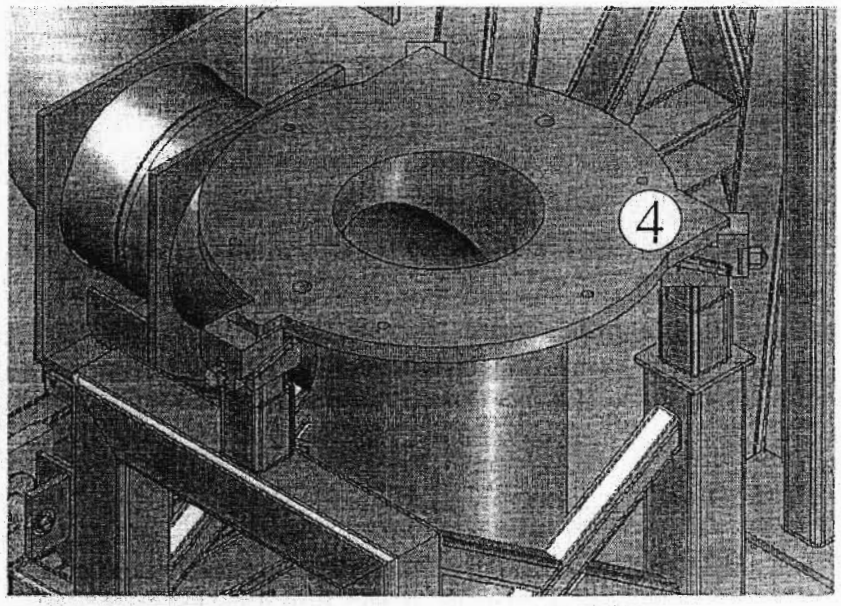

Three point pump support at pump flange.

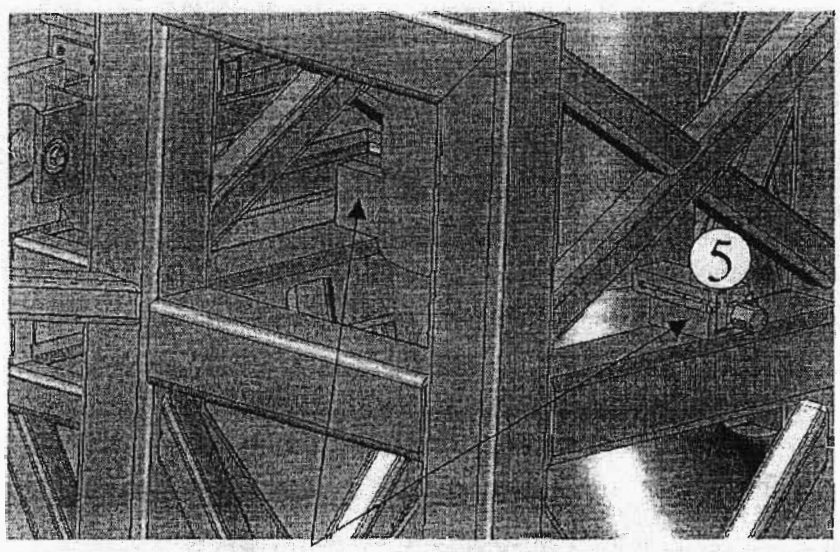

Pump discharge nozzle support.
(only if required by analysis)

TLP Layout

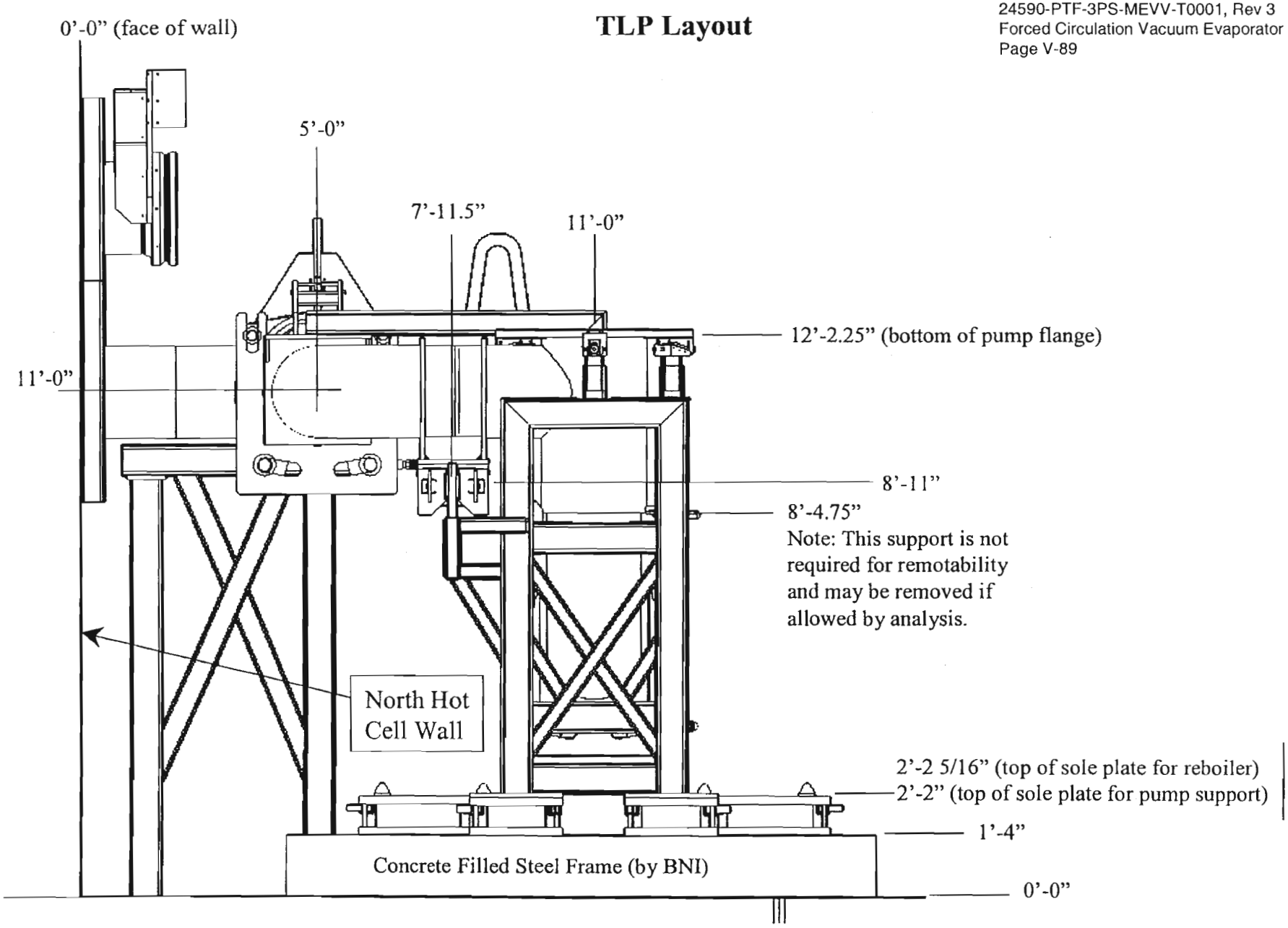

Elevation View (looking east)

TLP Layout

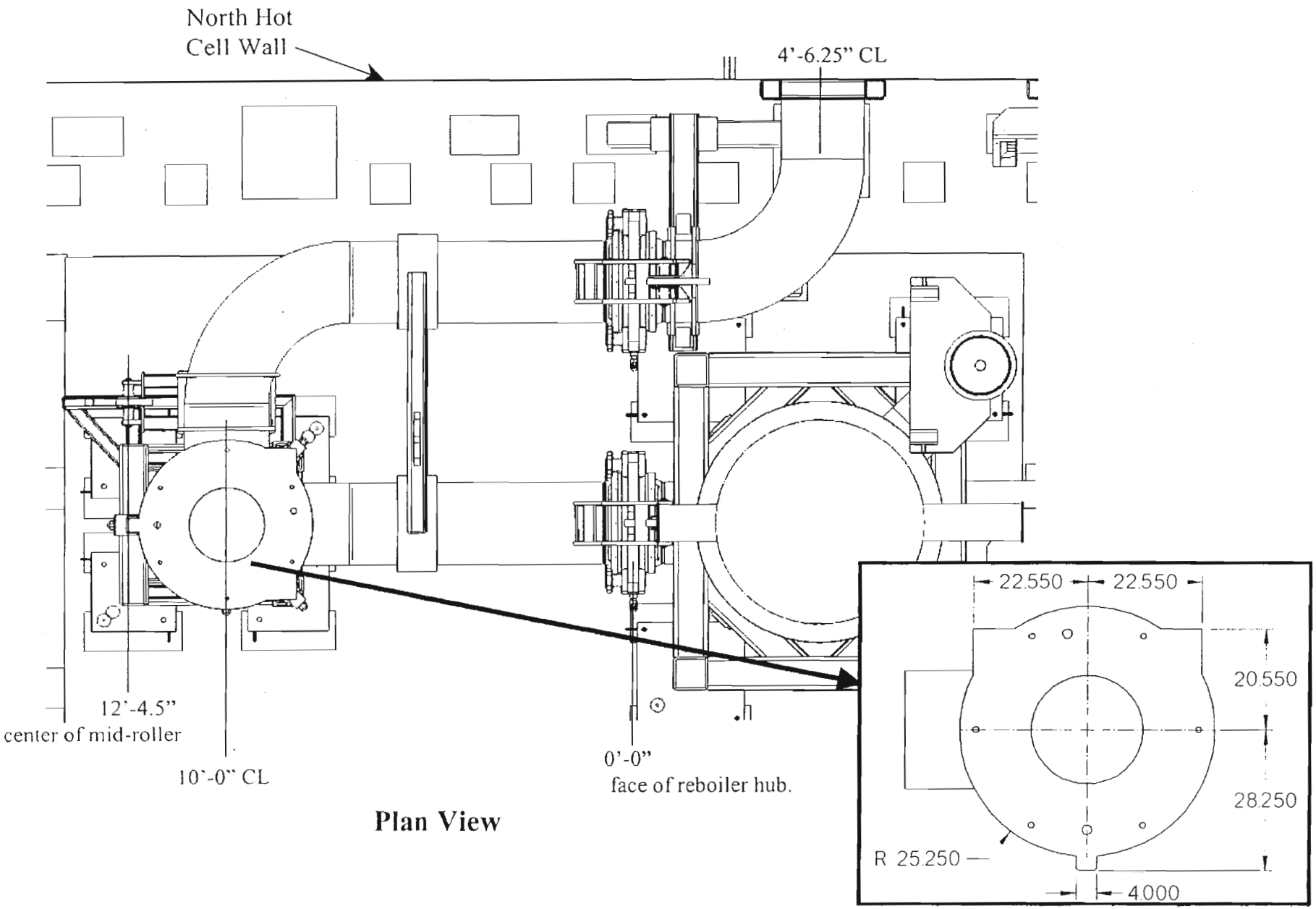

Plan View

Pump Flange Detail

Pump Support Frame (TLP)

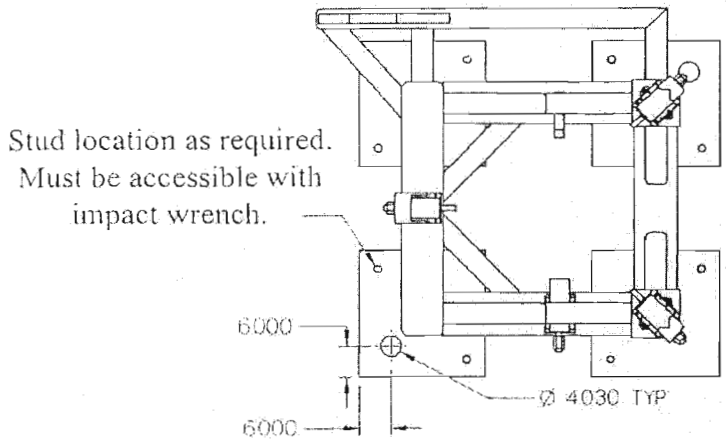

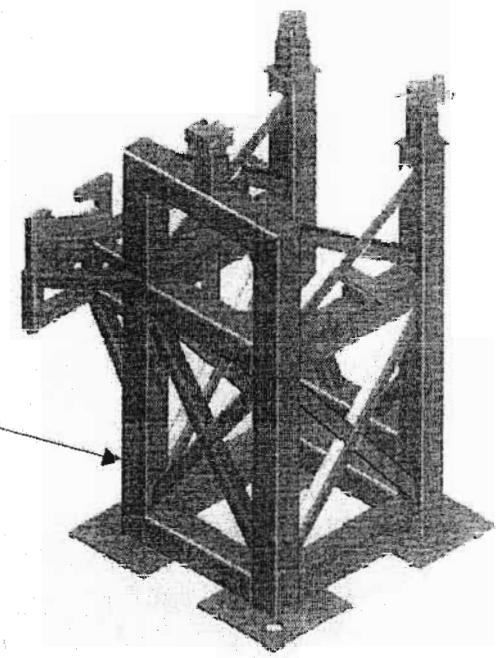

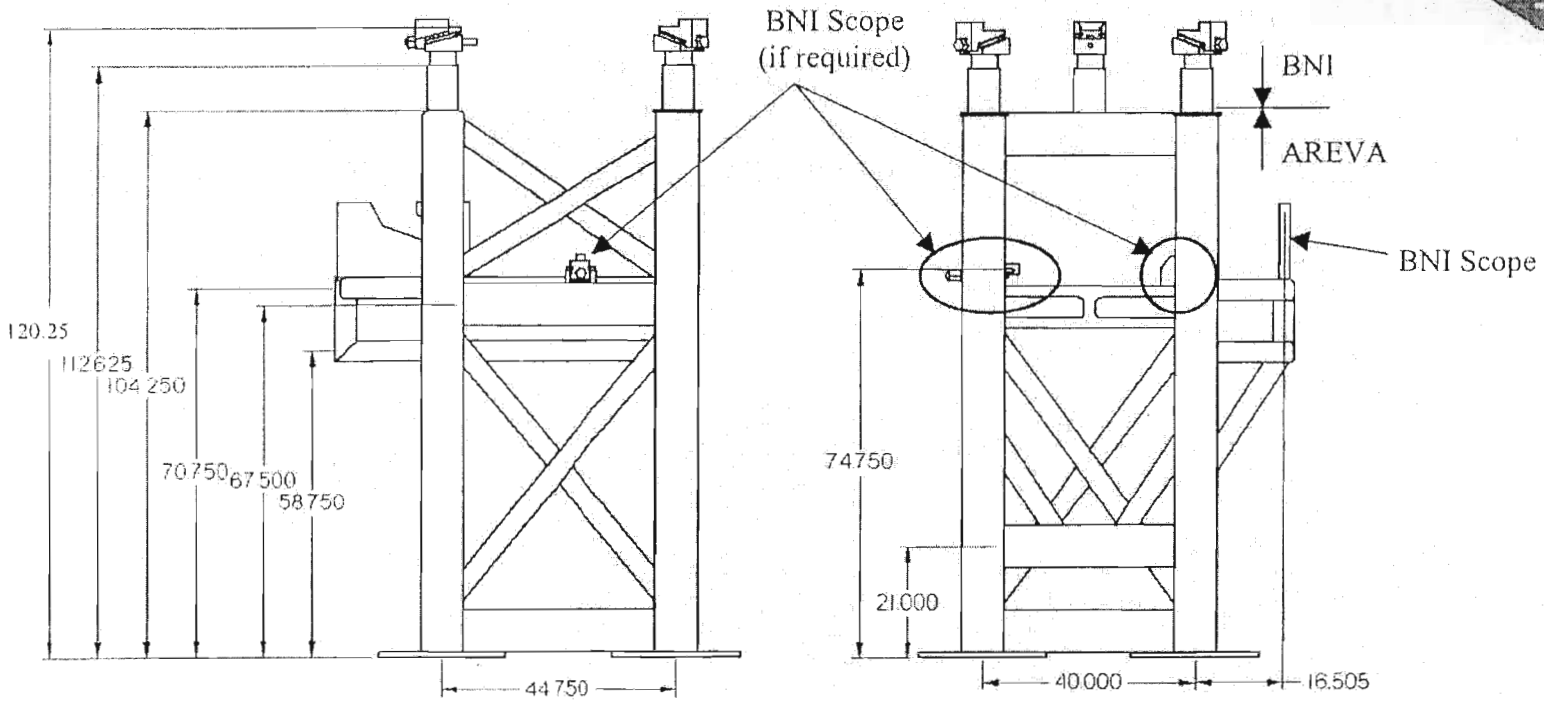

Equipment Pad and Sole Plates (TLP)

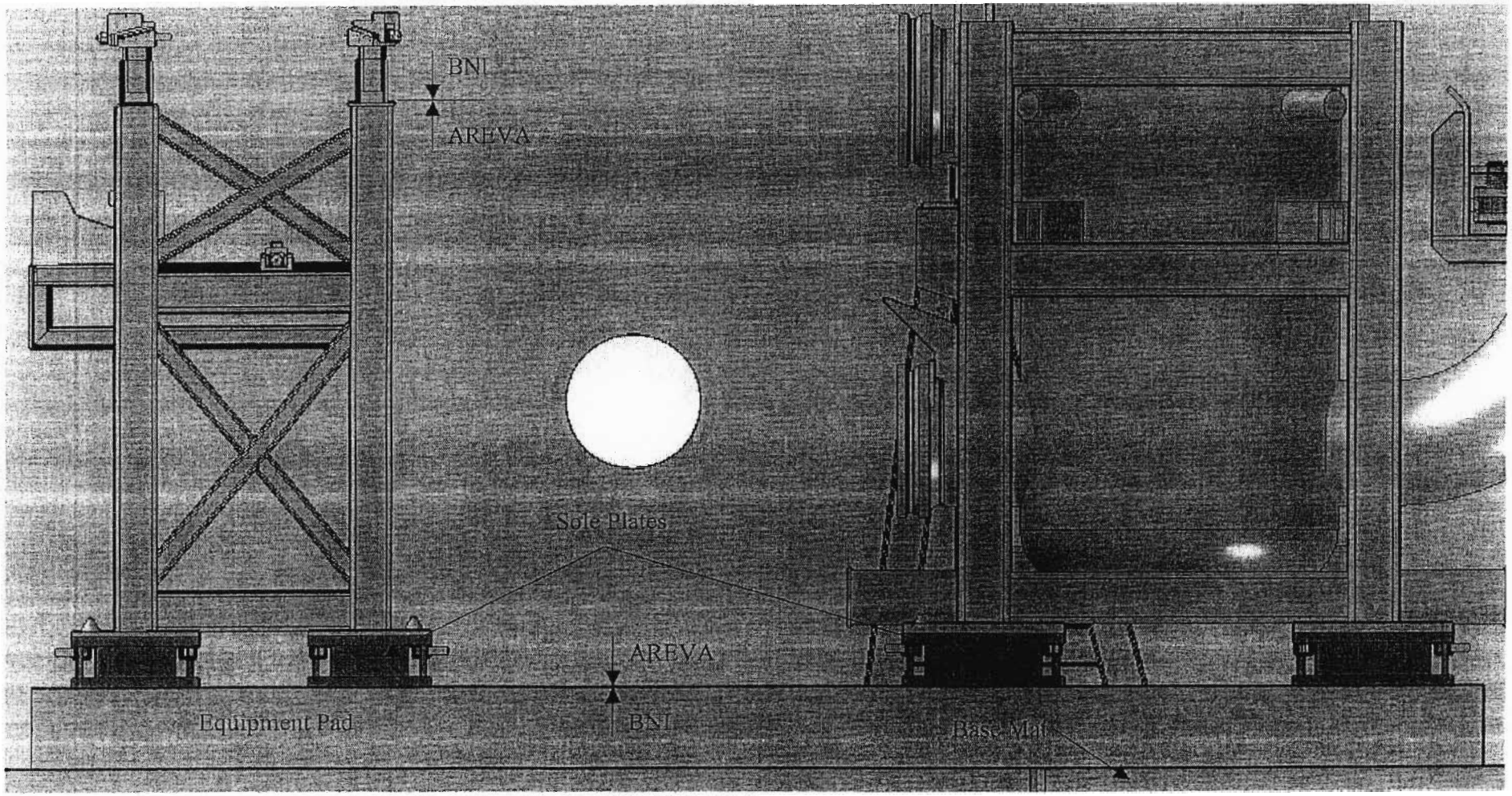

Sole Plates (TLP)

Stud location as required. Must be accessible with impact wrench.

Example Sole Plate

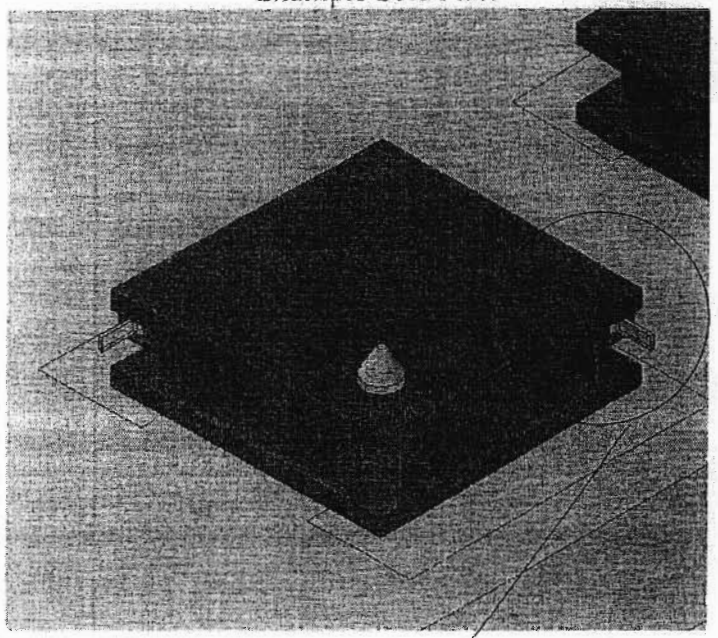

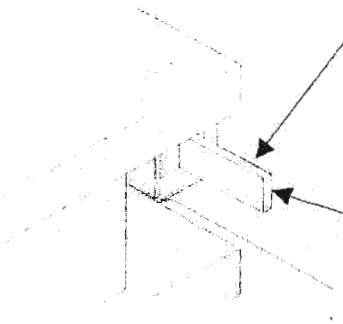

Dowel Pin (Typ)

Captured Nuts must be accessible with the Power Manipulator.

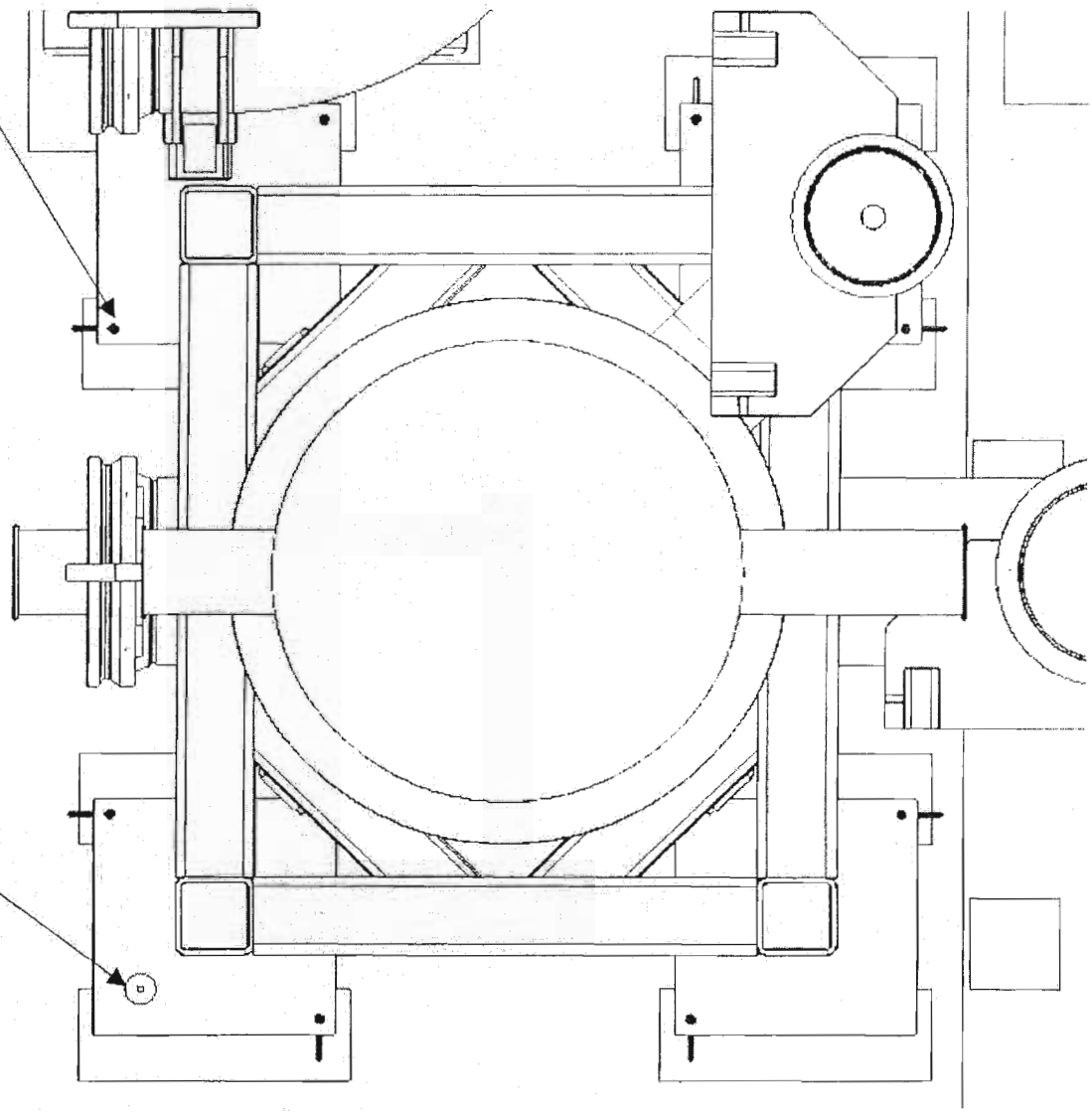

TLP

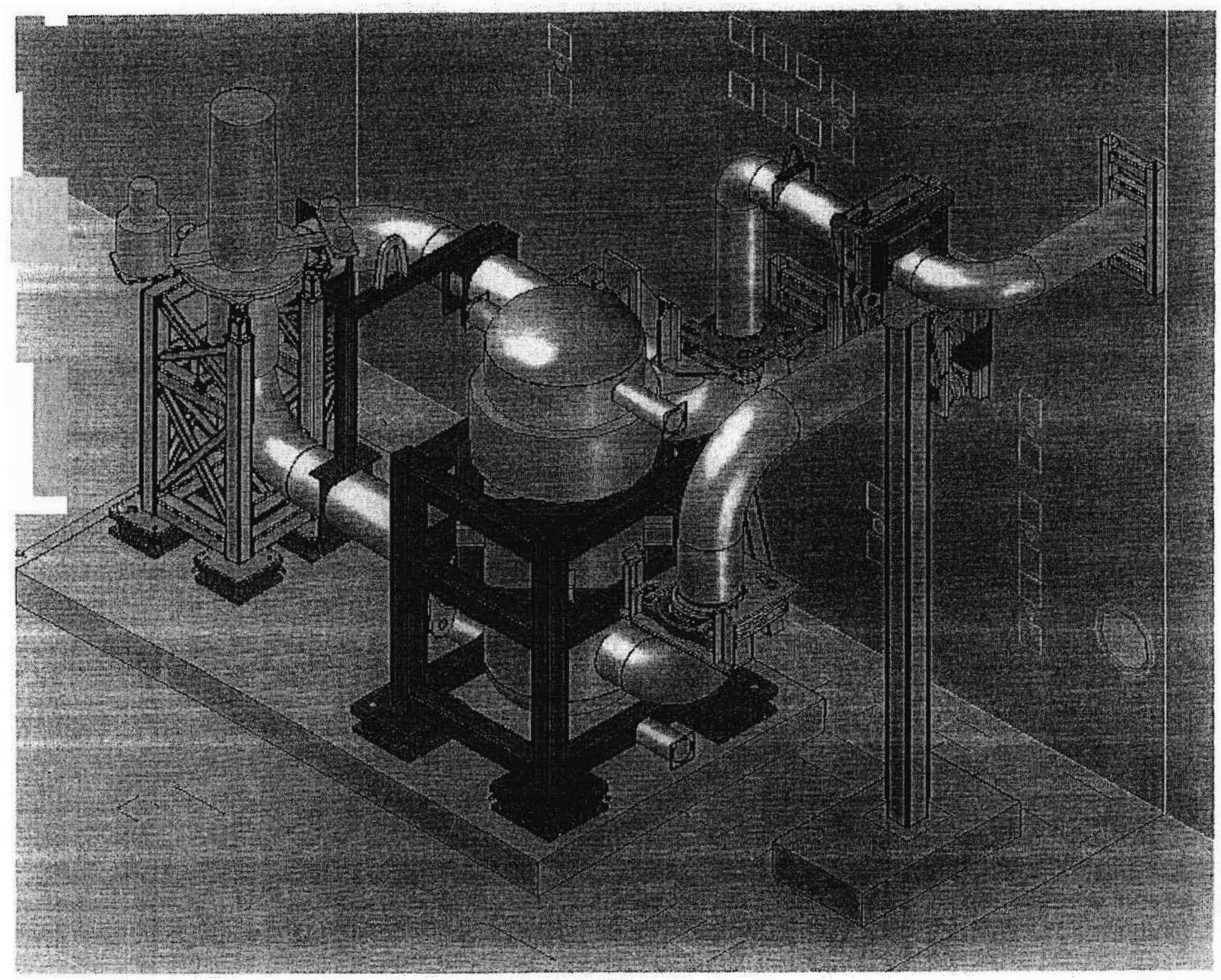

TLP

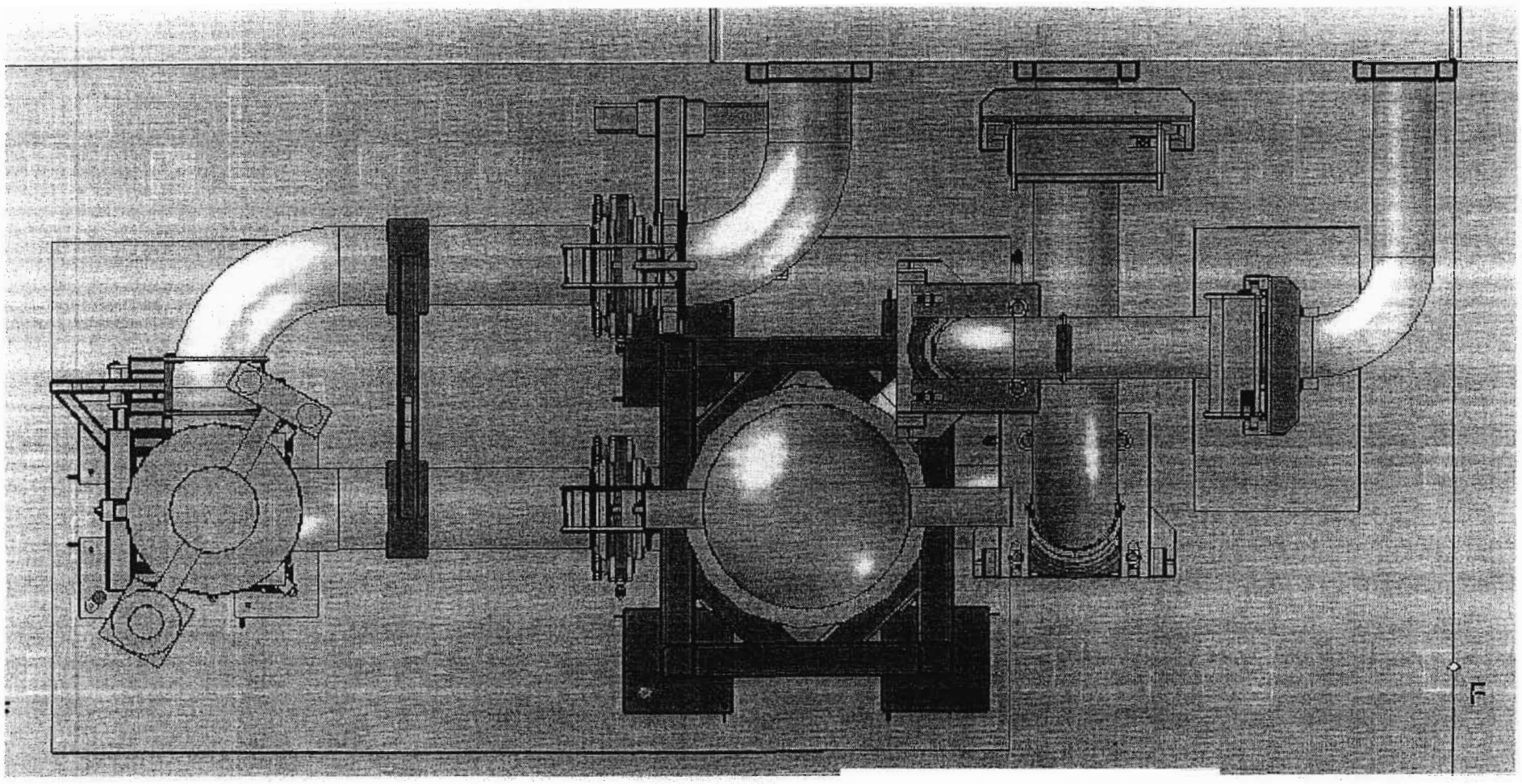

TLP

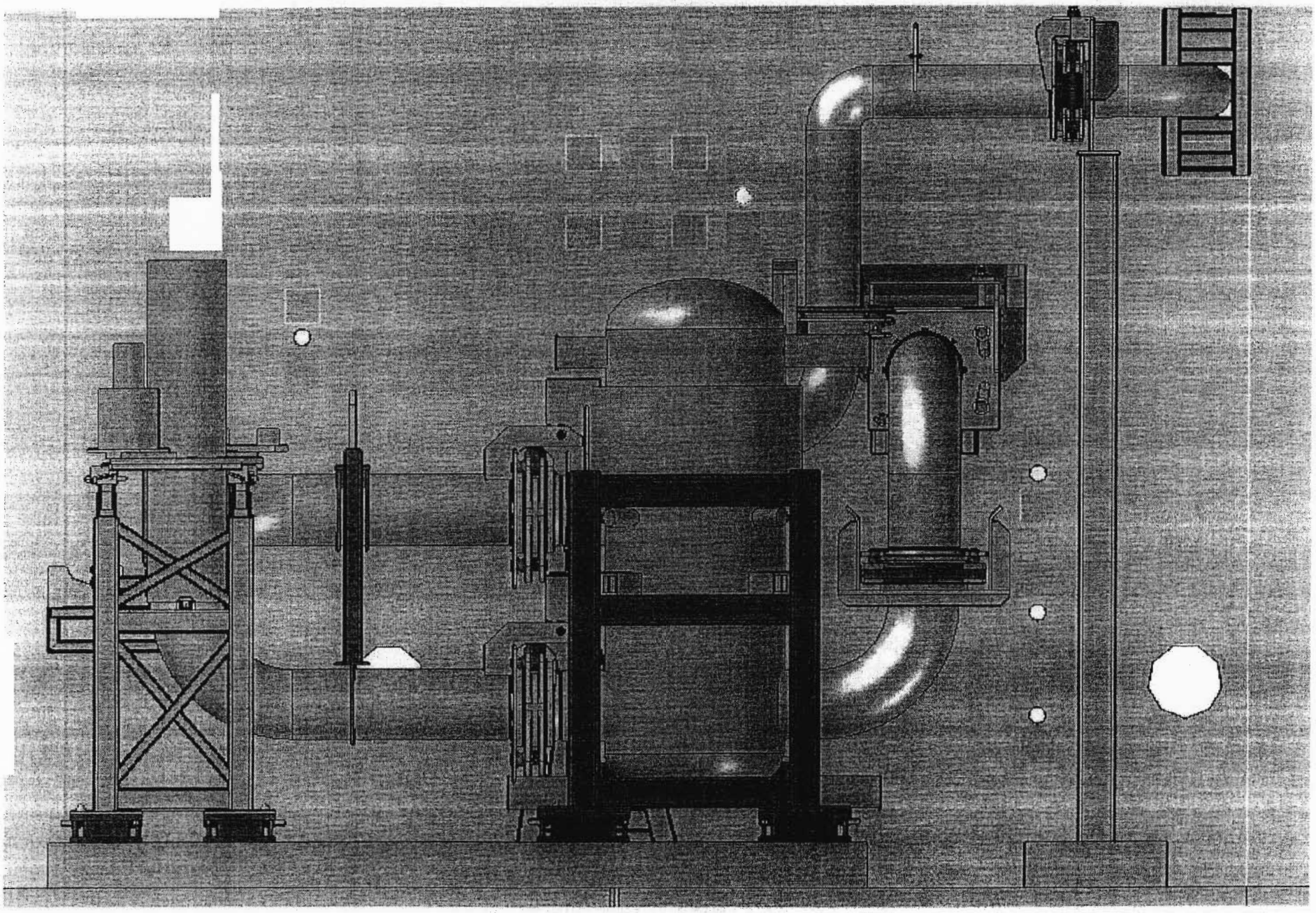

Area 26/27 (FEP)
Design Concepts

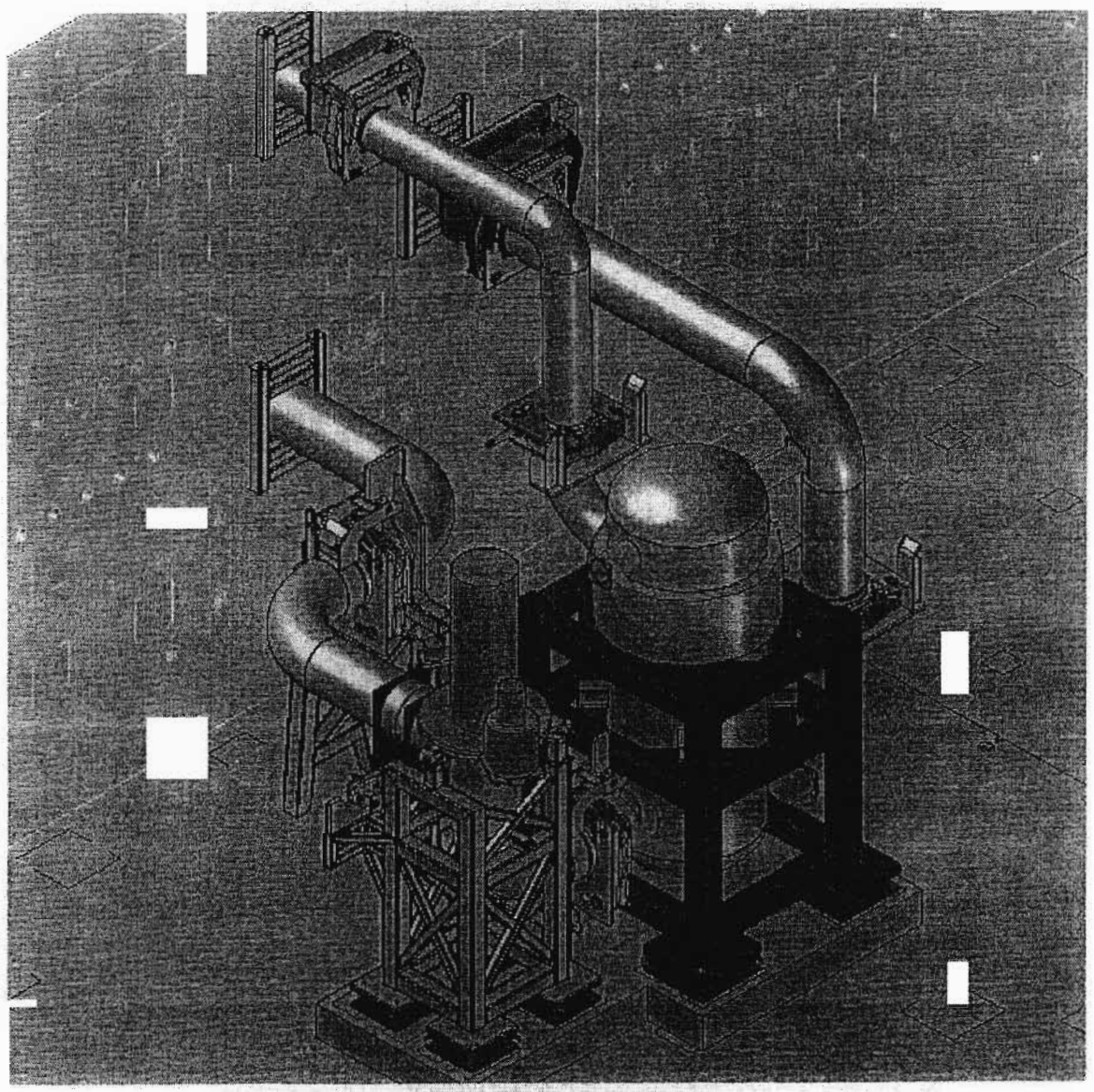

Current Layout

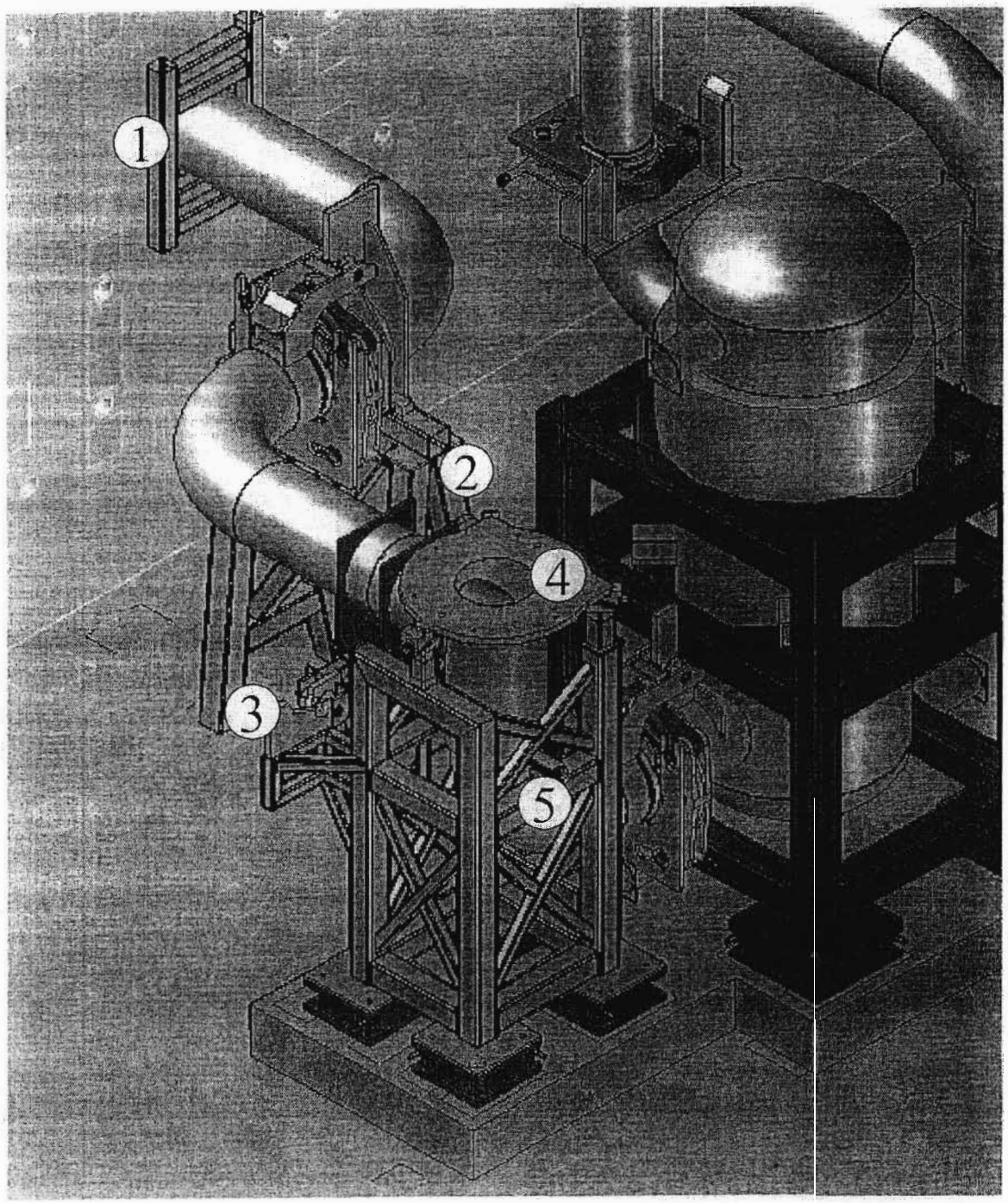

Proposed Support Configuration (FEP)

See corresponding details on following slides.

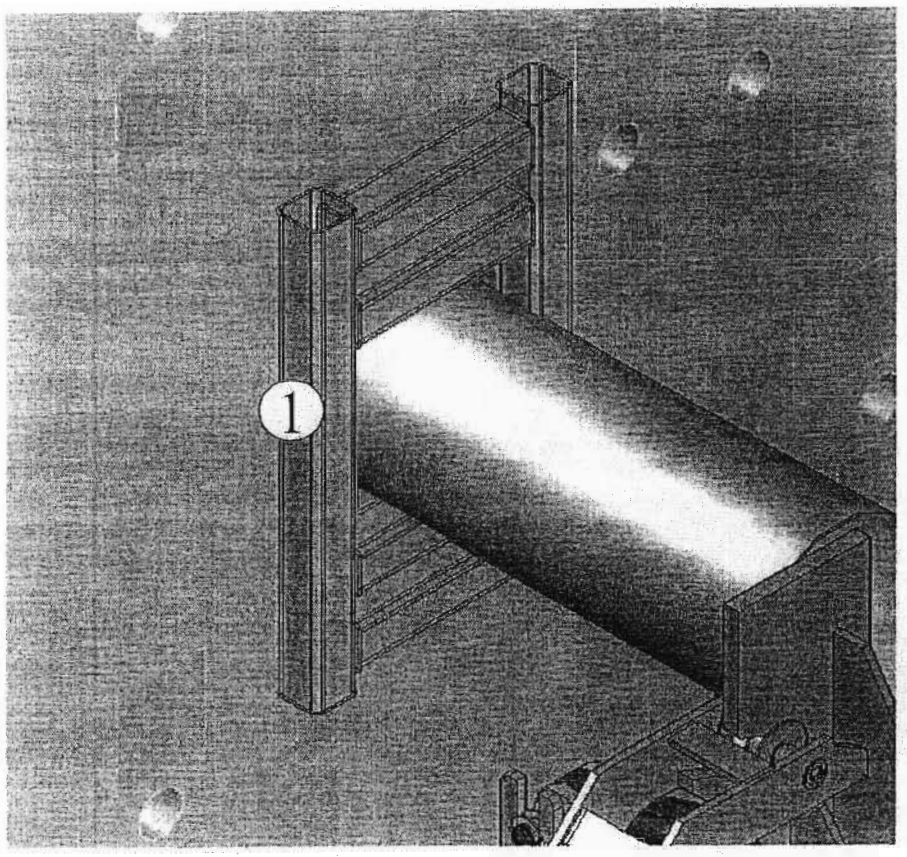

Guide supports at face of hot cell wall

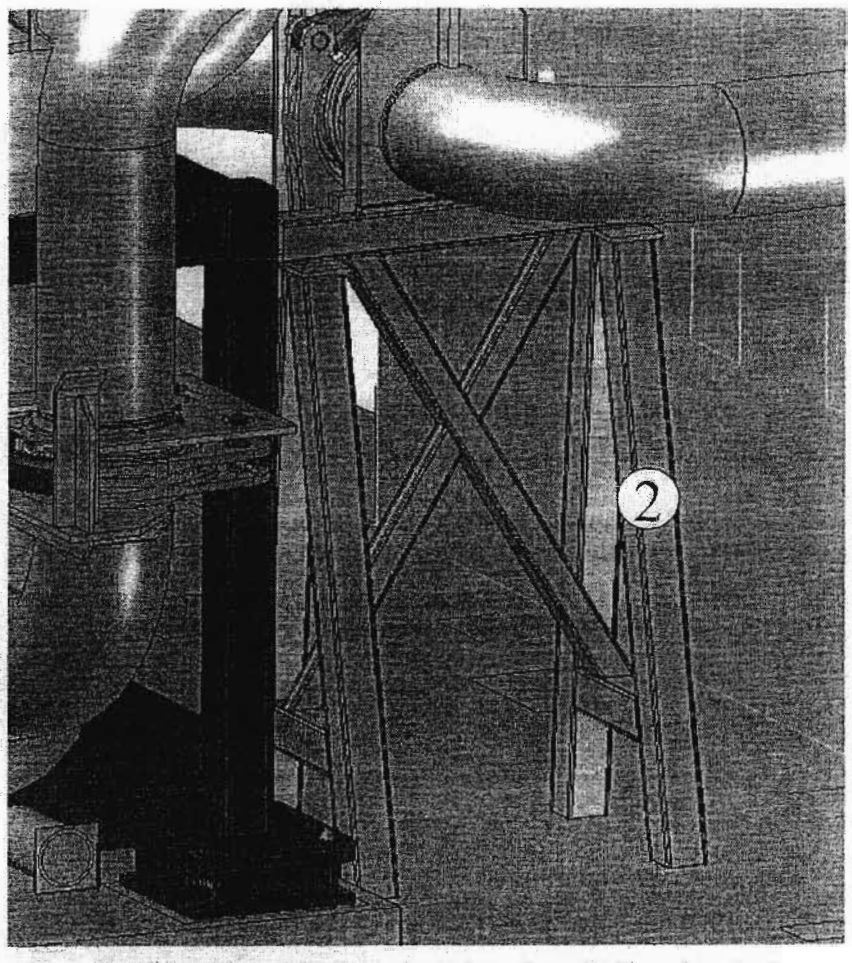

Guide support on back side of wall Grayloc hub.

FEP

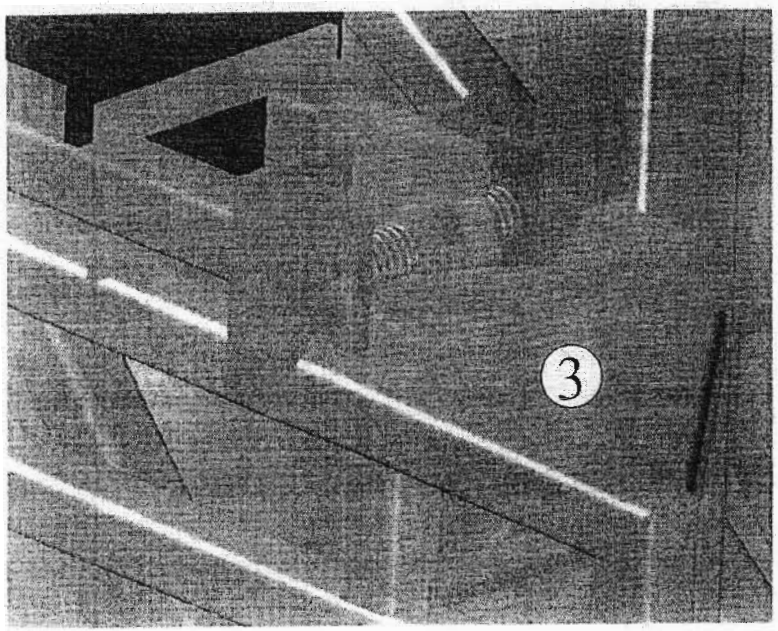

Midroller support

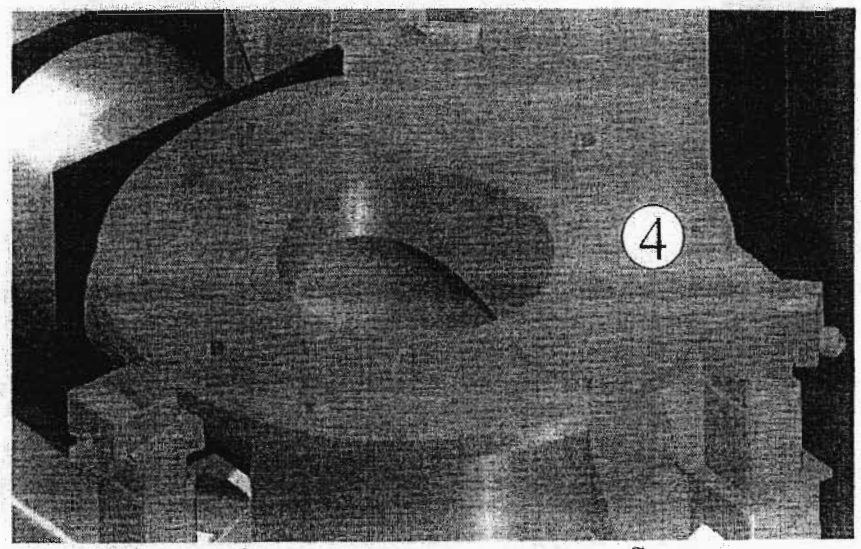

Three point pump support at pump flange.

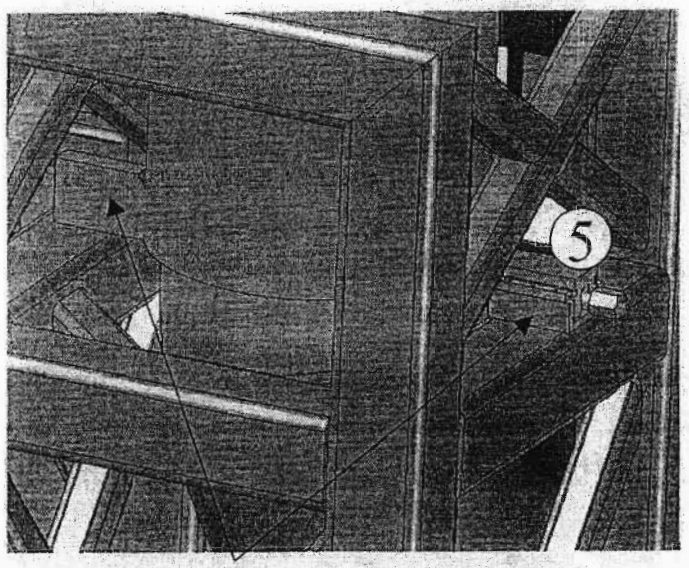

Pump discharge nozzle support.
(only if required by analysis)

FEP Layout

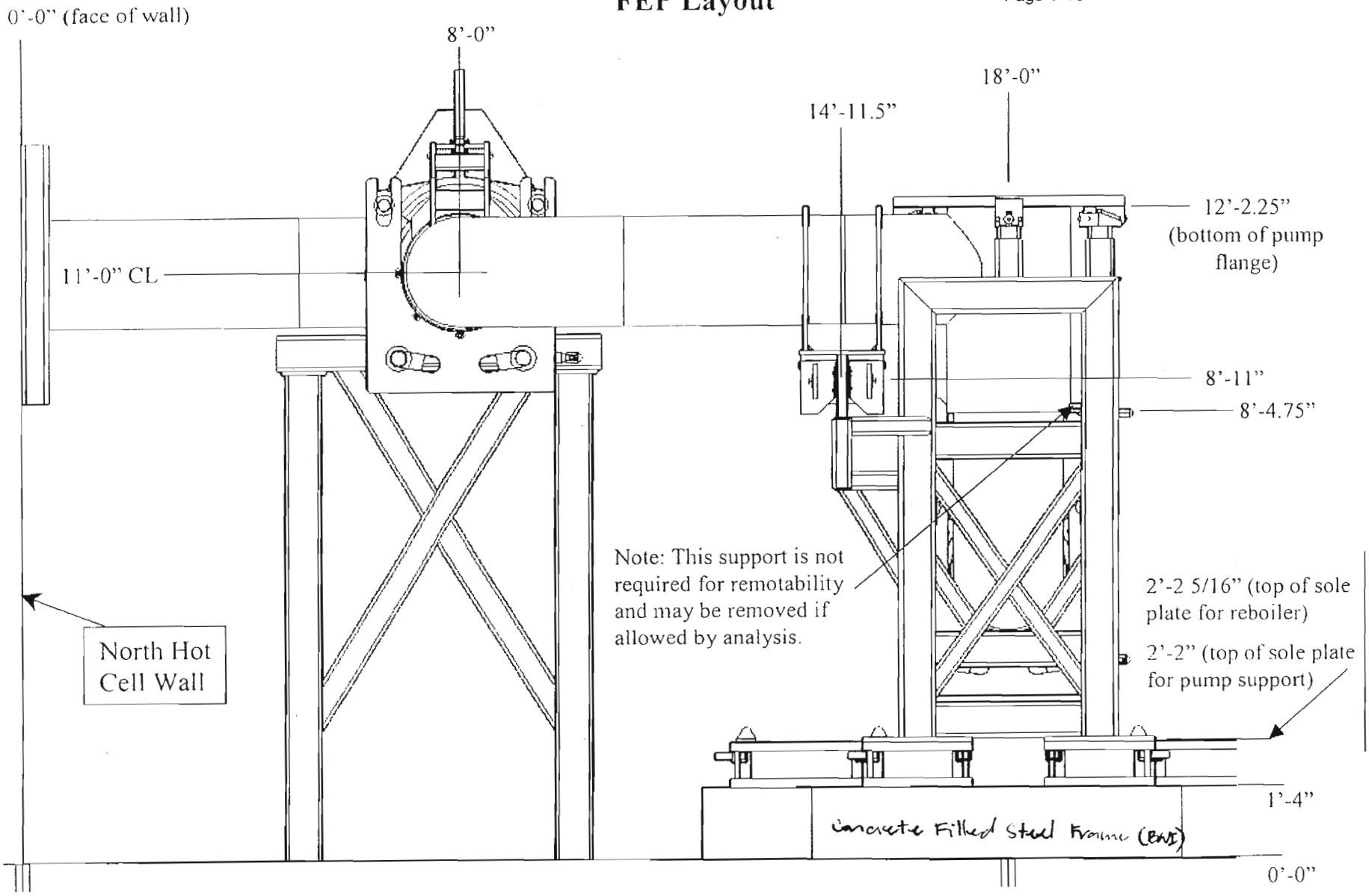

Elevation View (looking west)

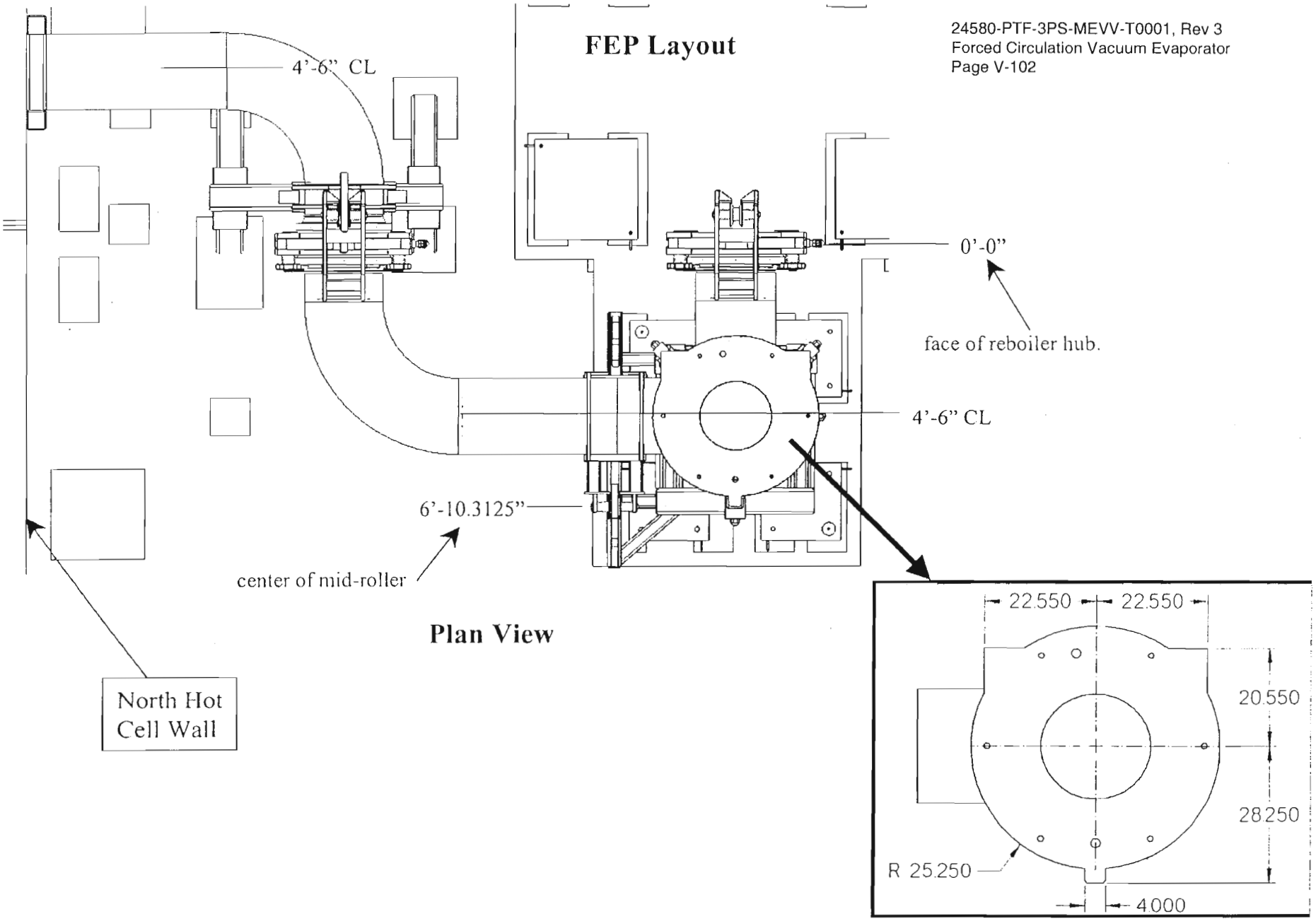

Pump Flange Detail

Pump Support Frame
(FEP)

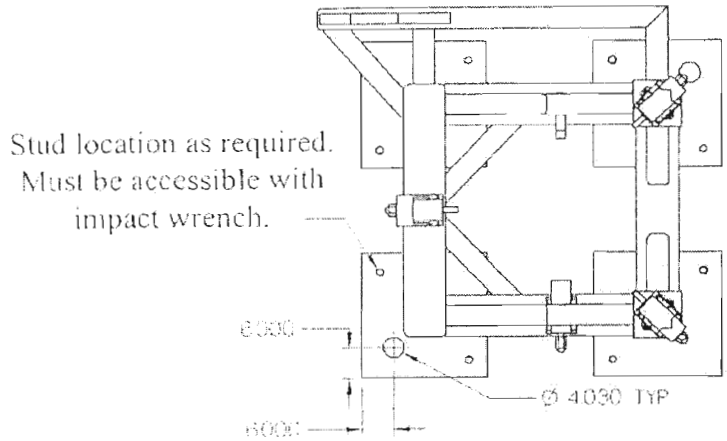

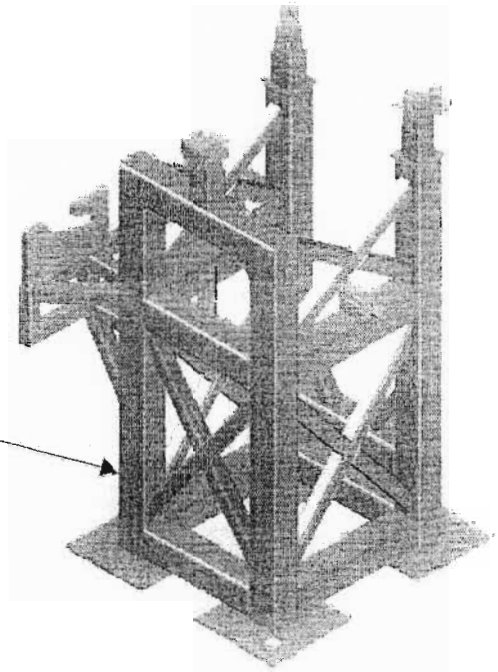

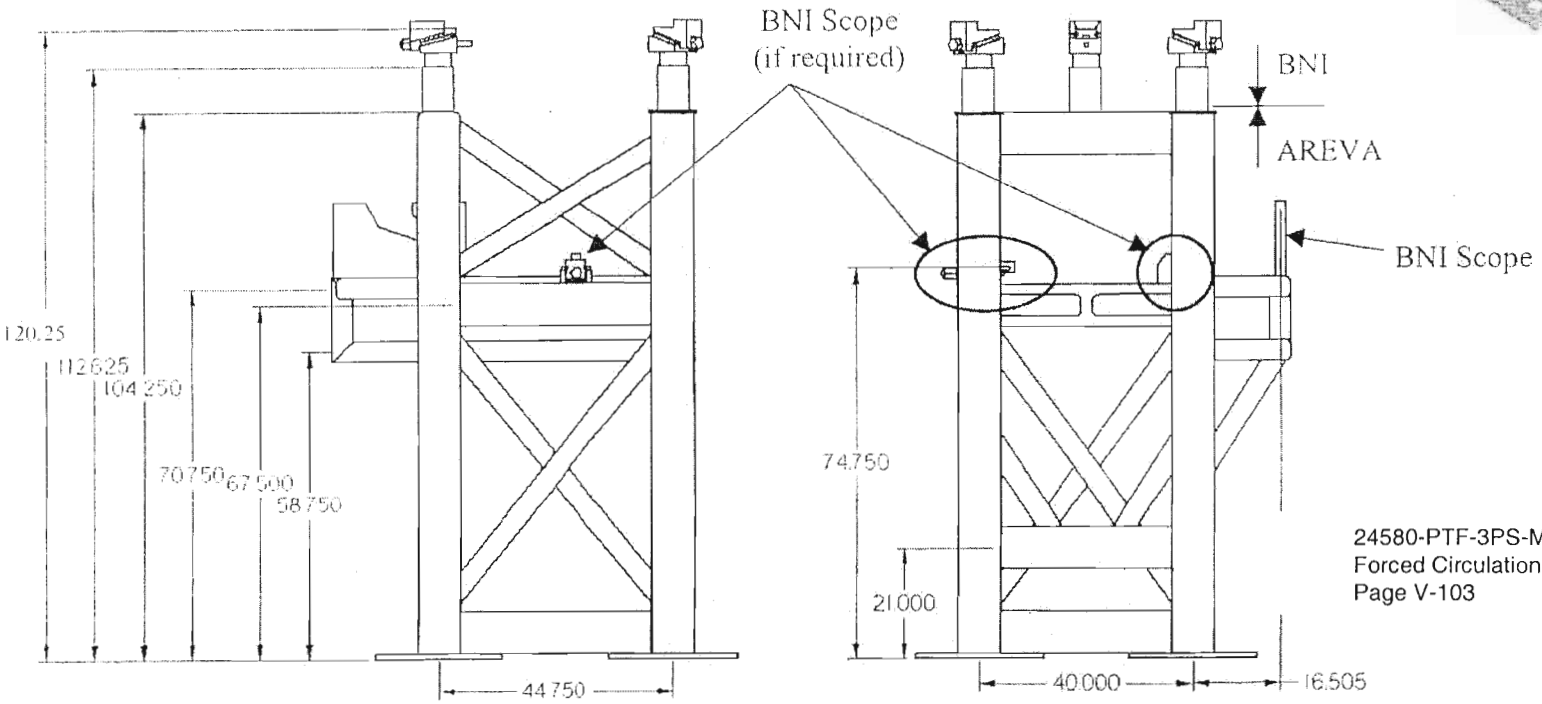

24580-PTF-3PS-MEVV-T0001, Rev 3
Forced Circulation Vacuum Evaporator
Page V-103

Equipment Pad and Sole Plates (FEP)

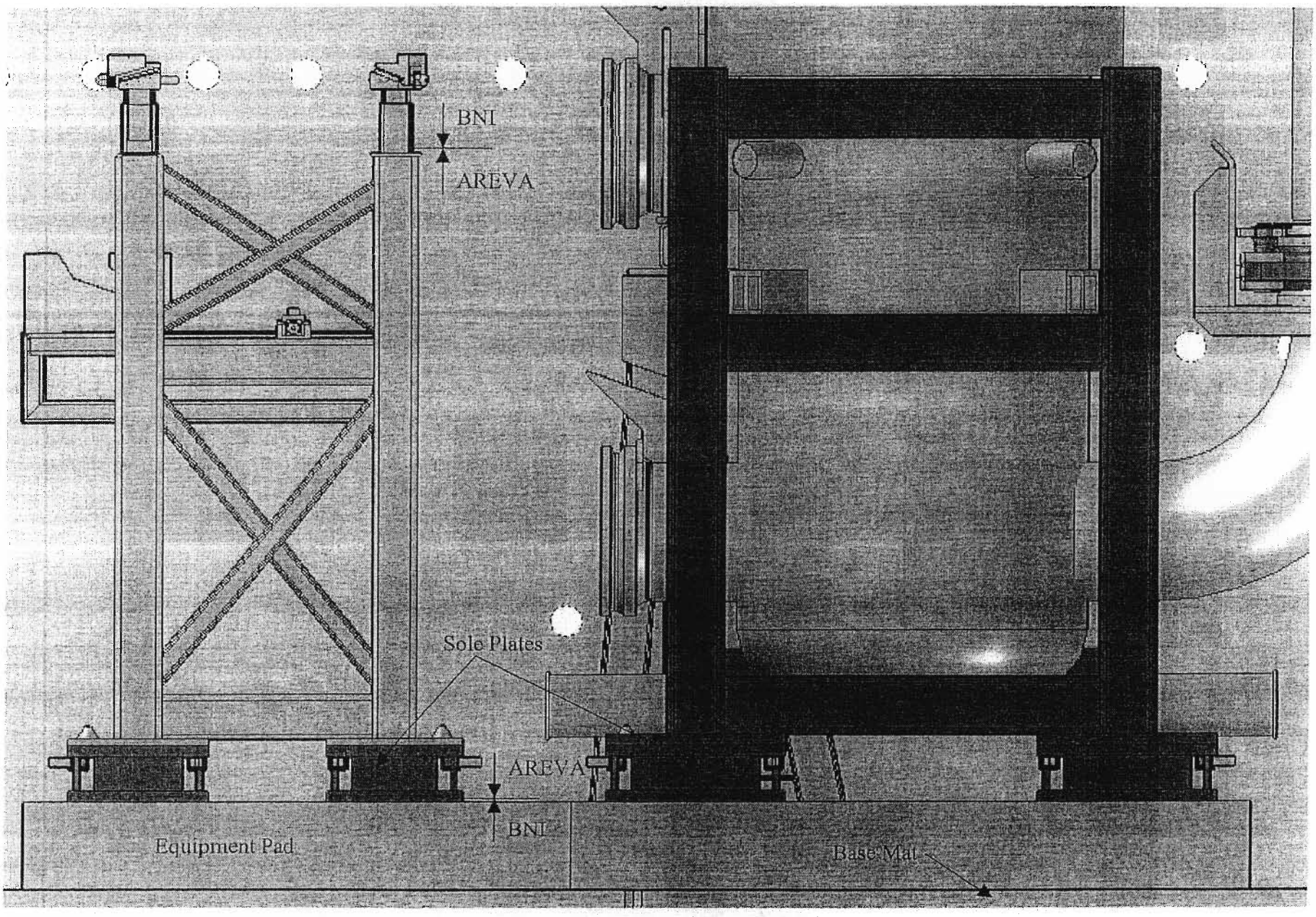

Sole Plates
(FEP)

Stud location as required. Must be accessible with impact wrench.

Example Sole Plate

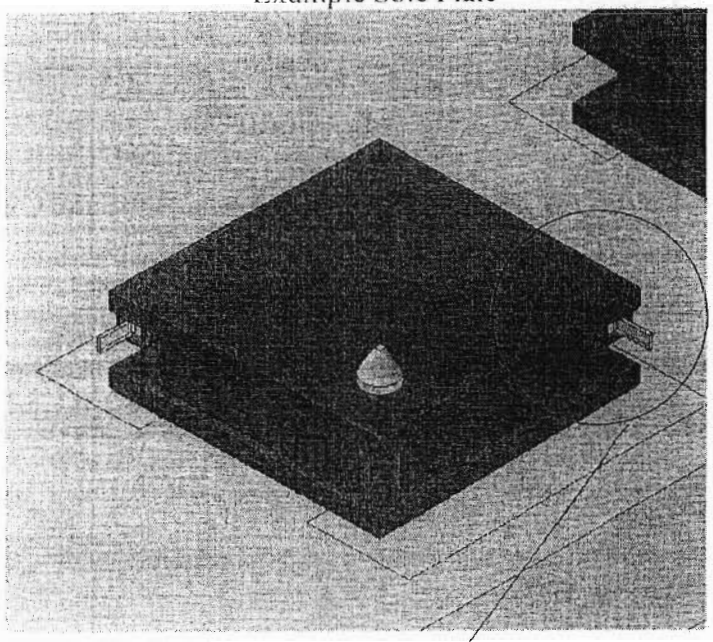

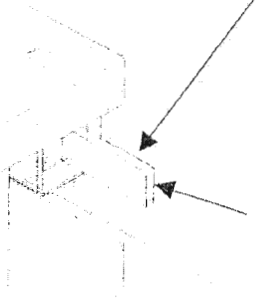

Captured Nuts must be accessible with the Power Manipulator.

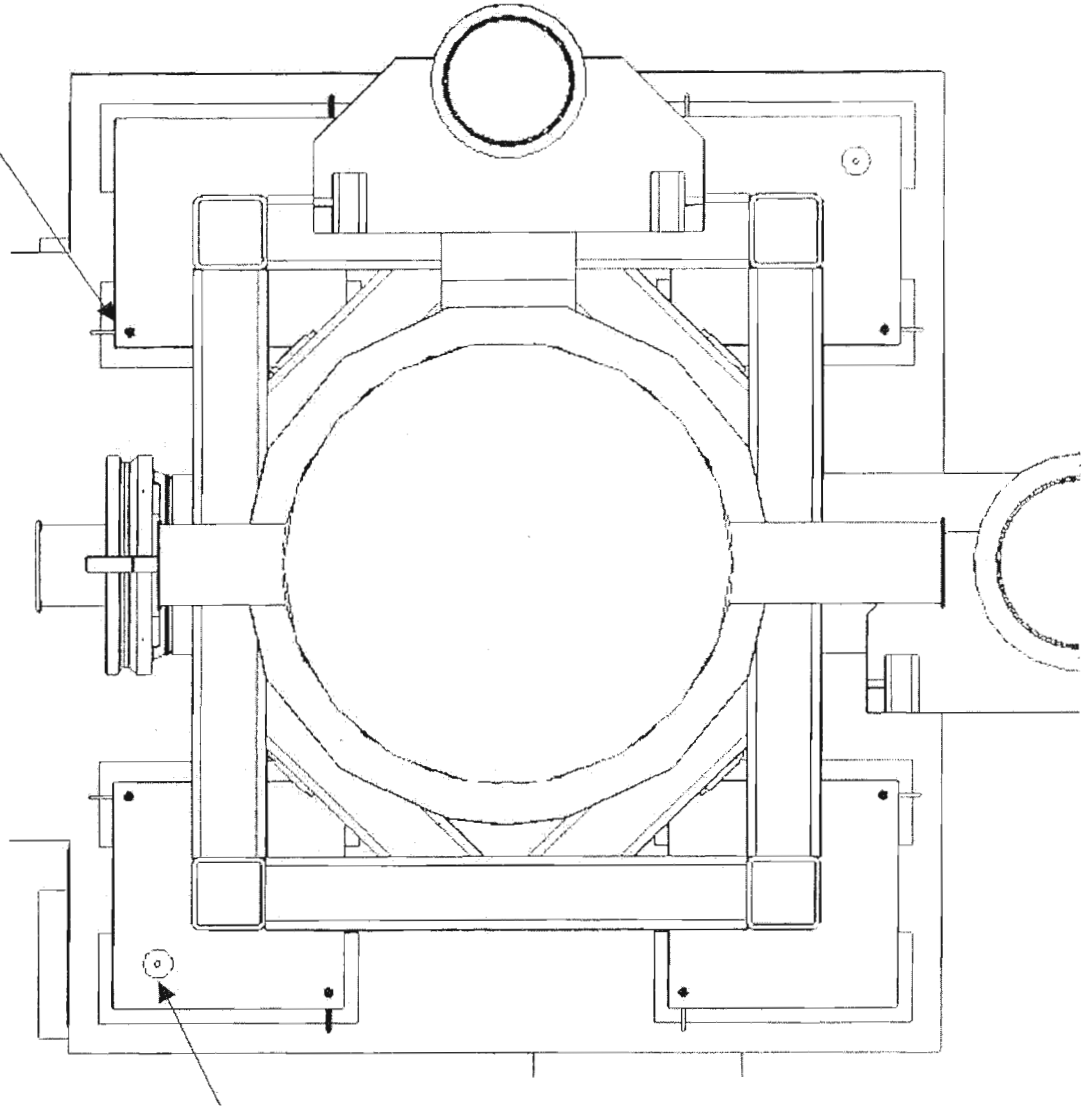

Dowel Pin (Typ)

FEP

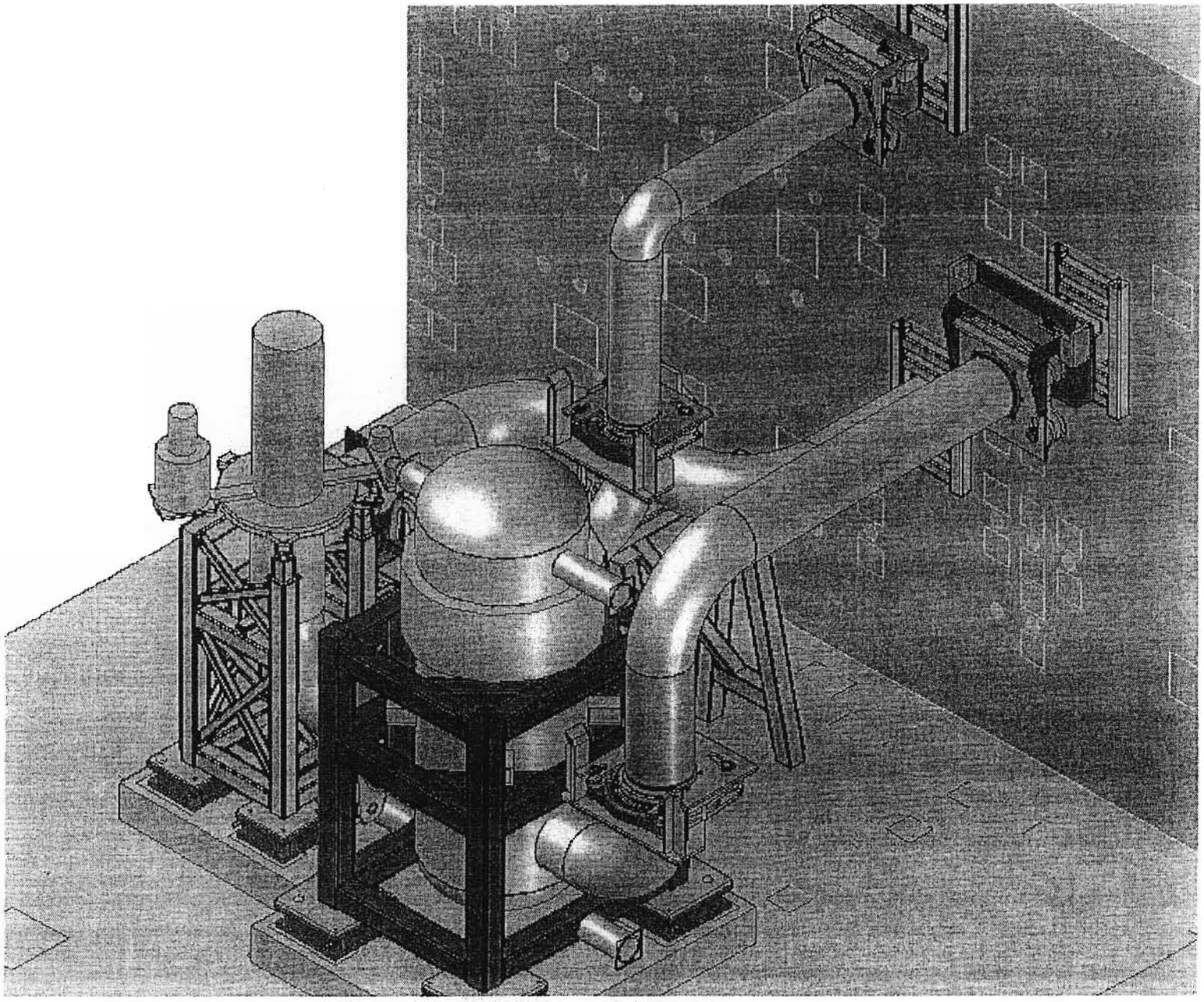

FEP

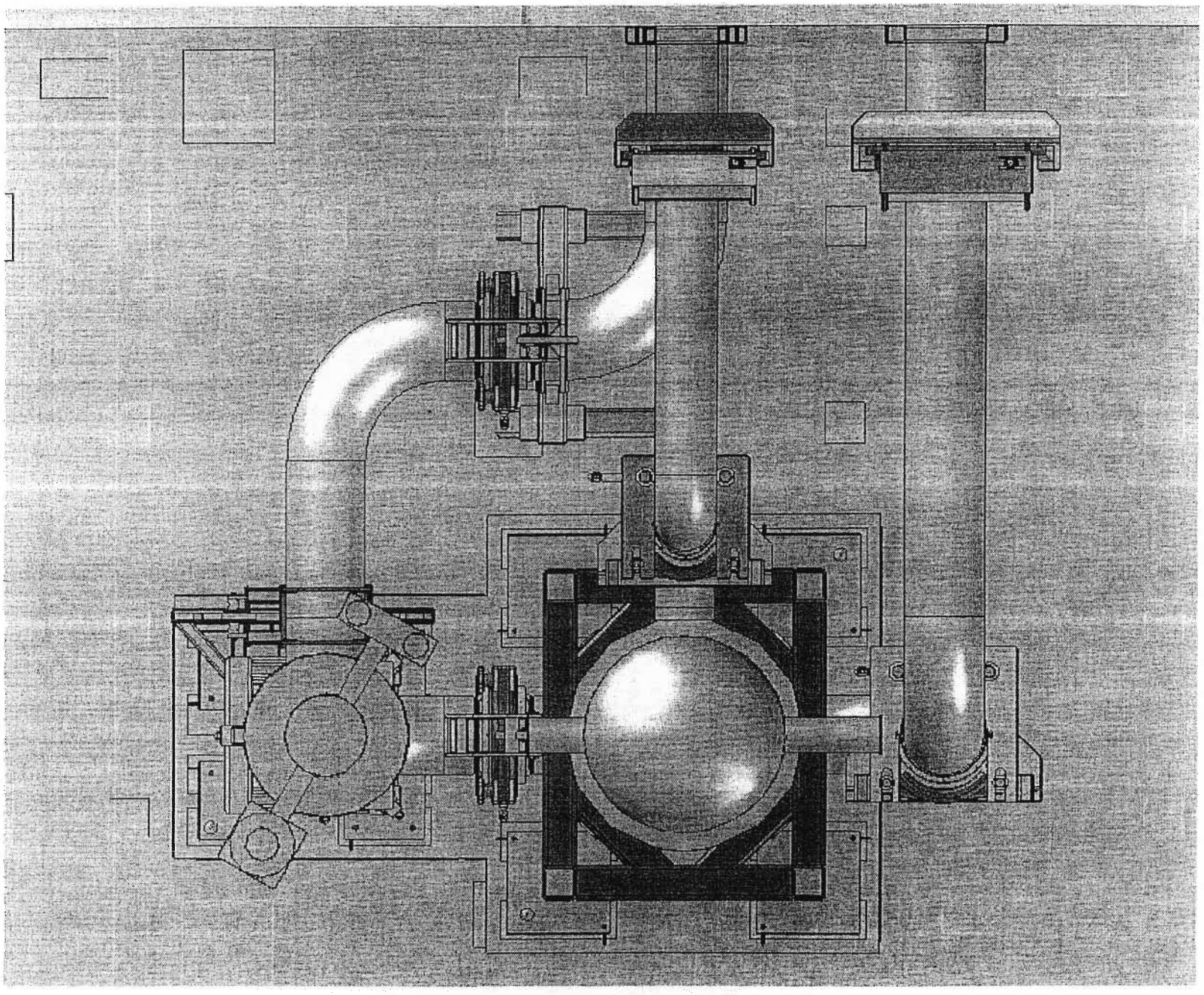

FEP

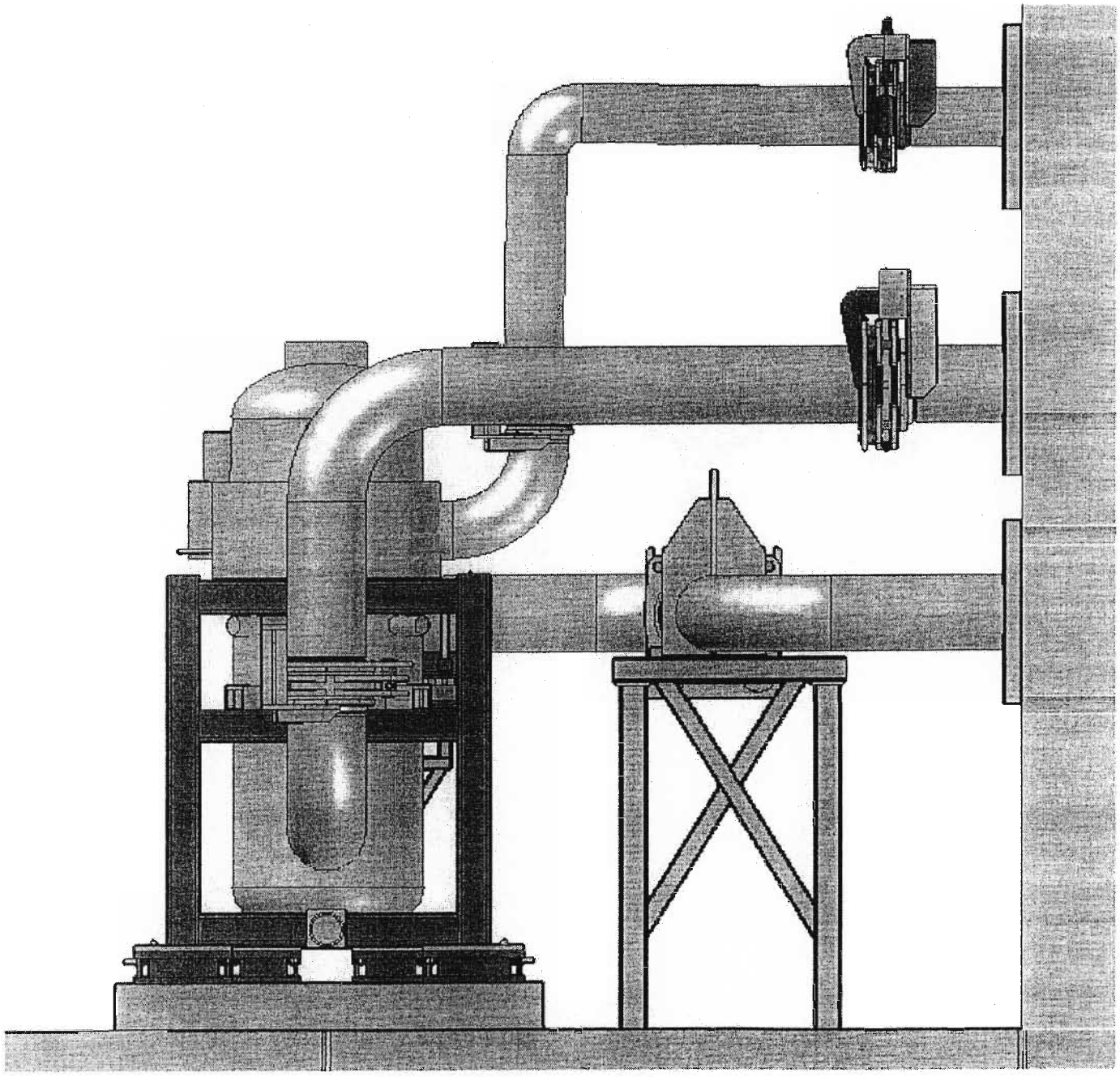

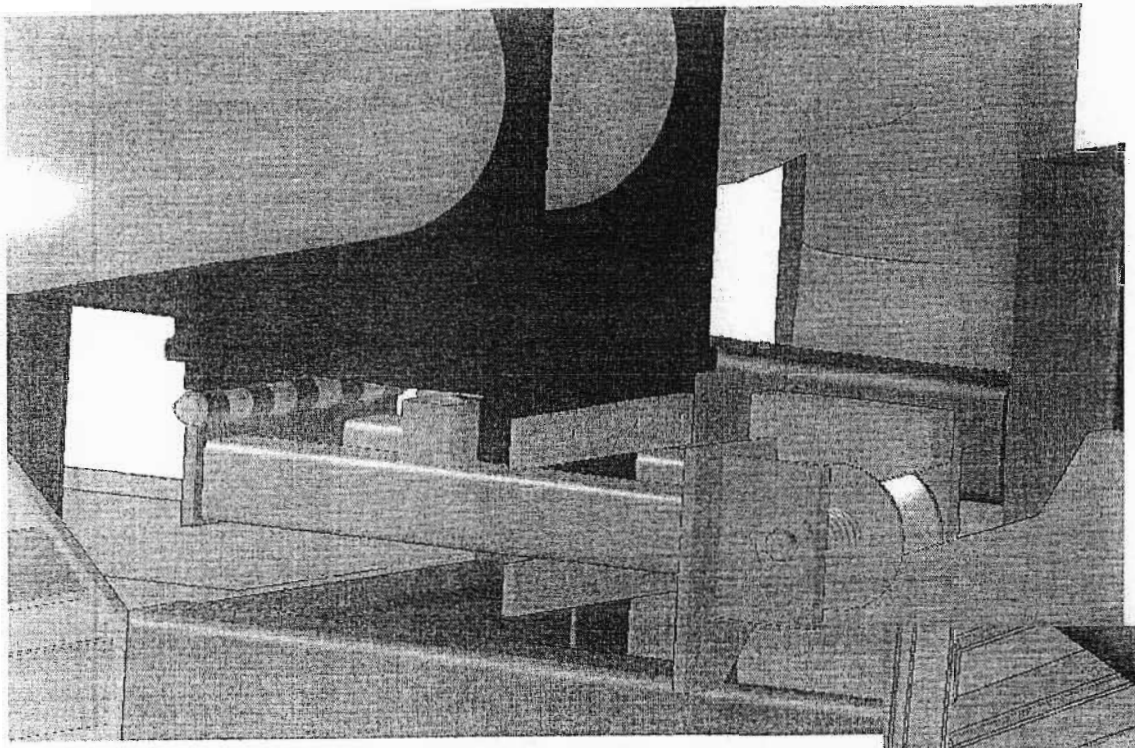

Mid-Roller Assembly

Connector Roller Assembly

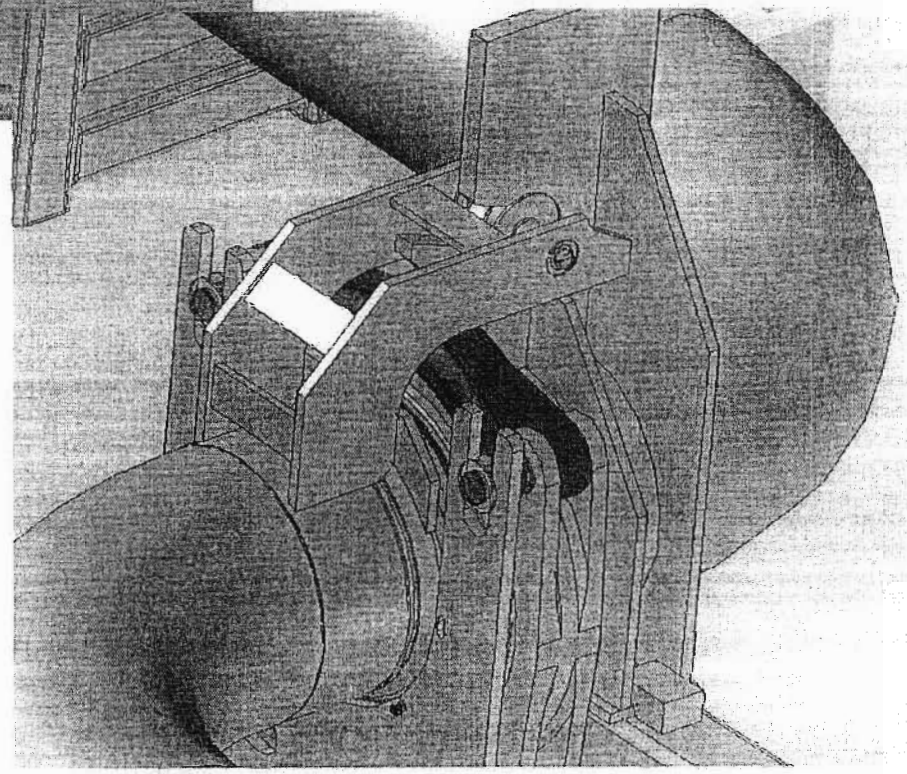

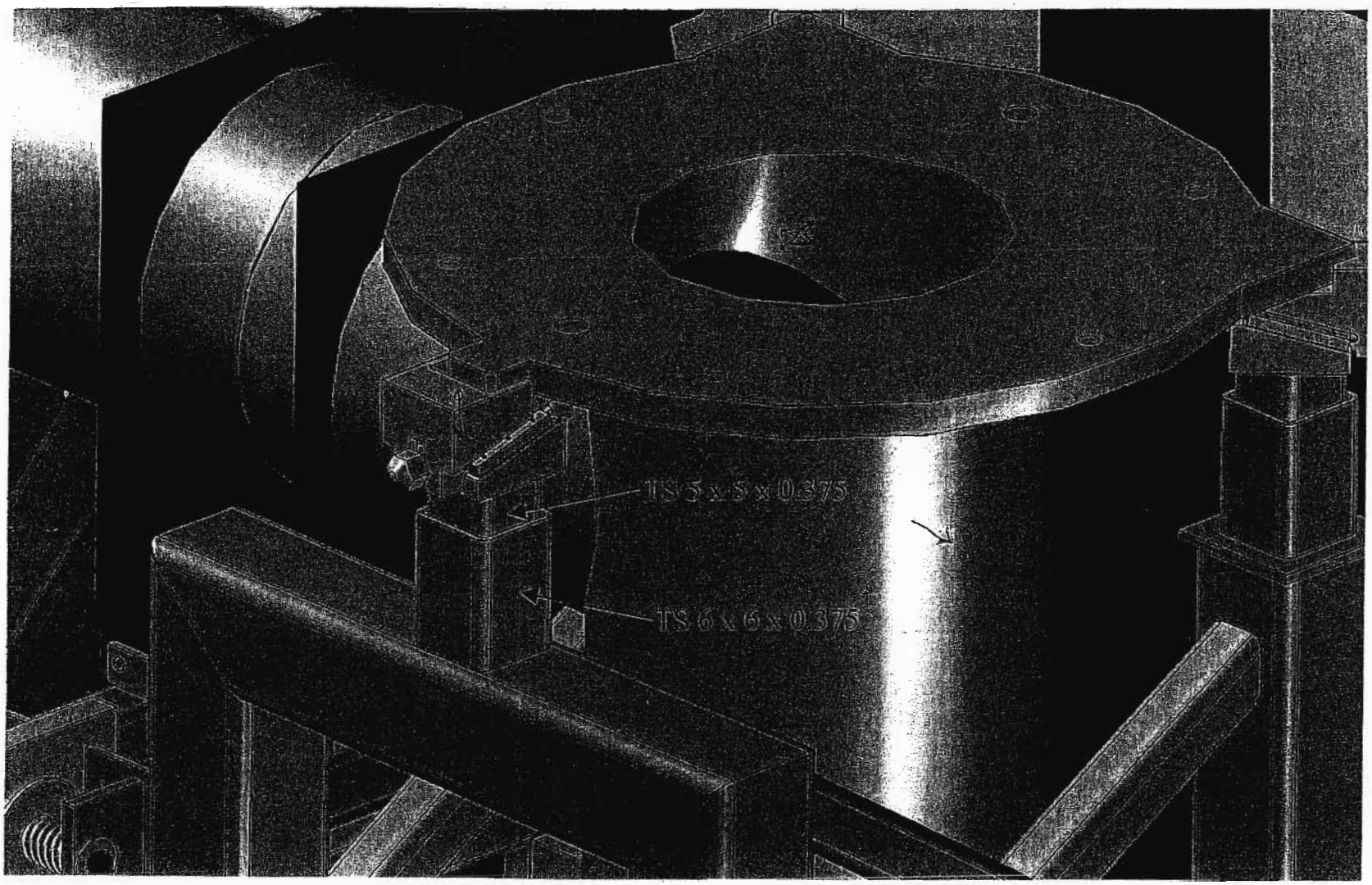

The show member sizes are typical for FEP, TLP and CNP pump support frames.

ATTACHMENT #6

SC-I/SC-II Seismic Analysis Qualification and FEA Report Check List

SC-I/II Seismic Analysis Qualification and FEA Report Check List

	Required Data	Source Reference	Applicable Section of Seismic Qualification Report
1	**Identification and Description of Equipment**		
1.1	Equipment Tag Number or other identification that uniquely defines the equipment	24590-WTP-3PS-SS90-T0001 §7.1.2(a)	
1.2	Identification of safety functions of the equipment that must be provided during and after a design basis earthquake (DBE)	24590-WTP-3PS-SS90-T0001 §7.1.2(d) 24590-WTP-3PS-MV00-T0002 §7.3.1 Equipment specification and/or data sheet	
1.3	Identification and description of the parts or features of the equipment that perform the safety functions and are therefore required to resist the DBE (this includes identification of Seismic Categories of relevant components or parts of the equipment)	Equipment specification and/or data sheet 24590-WTP-3PS-MV00-T0002 §2.2.4 DOE-STD-1020-94 §1.4 (page 1-7) and §C.8 (page C-65)	
1.4	Identification of basic material properties, key dimensions, and physical configuration of the equipment, including reference to design drawings/documents (including revision designation) that are used to control the design/configuration of the equipment	24590-WTP-3PS-SS90-T0001 §7.1.2(c)	
2	**Description of Analyses and Methodology**		
2.1	Reference to governing code(s) that specify ultimate or yield values (code allowable strength or stress levels)	Equipment specification and/or data sheet 24590-WTP-3PS-SS90-T0001 §7.1.2(e) 24590-WTP-3PS-MV00-T0002 §2.2.4 DOE-STD-1020-94 §2.3.2 (page 2-12)	
2.2	Identification of the code-defined strength or stress levels used in the analyses (the capacity of the equipment based on code ultimate or yield values)	24590-WTP-3PS-SS90-T0001 §7.1.2(e) 24590-WTP-3PS-MV00-T0002 §2.2.4 DOE-STD-1020-94 §2.3.2 (page 2-12)	
2.3	Definition of the seismic loads (earthquake loadings) used in the analysis (e.g., in-structure response spectra)	24590-WTP-3PS-SS90-T0001 §7.1.2(e) DOE-STD-1020-94 §1.4 (page 1-7), §2.2 (page 2-4), §C.8 (page C-65) 24590-WTP-3PS-MV00-T0002 §2.2.4	
2.4	Identification of equipment aging processes (e.g., corrosion, erosion, radiation, vibration/thermal fatigue, etc.), documentation or reference to documentation of these affects on material properties over the design life of the equipment, and evidence that the equipment will continue to provide its safety functions during and after a DBE at the end of design life	Equipment specification and/or data sheet 24590-WTP-3PS-SS90-T0001 §2.3 IEEE Std 344	

SC-I/II Seismic Analysis Qualification and FEA Report Check List

	Required Data	Source Reference	Applicable Section of Seismic Qualification Report
2.5	If an equivalent static analysis model is used in lieu of dynamic analyses, include justification of the adequacy of this approach (e.g., evidence that the structural features of the equipment are relatively simple, symmetric, and have essentially uniform distribution of mass and stiffness)	24590-WTP-3PS-SS90-T0001 §6.1.2 and §7.1.2(g) 24590-WTP-3PS-MV00-T0002 §2.2.4 DOE-STD-1020-94 §2.2, page 2-4	
2.6	Description of how the analysis considers 3 orthogonal components of earthquake ground motion (two horizontal and one vertical), and how the responses from the various direction components are combined in accordance with American Society of Civil Engineers (ASCE) Standard 4.	24590-WTP-3PS-SS90-T0001 §6.1.3 24590-WTP-3PS-MV00-T0002 §2.2.4 DOE-STD-1020-94 §2.3.2 (page 2-12)	
2.7	Identification of the damping values used in the analyses (e.g., damping values of 2 for massive low-stressed equipment with 0.5 for sloshing modes in liquid-containing metal tanks, or 3 for electrical cabinets and other equipment)	24590-WTP-3PS-SS90-T0001 §6.1.1(b) 24590-WTP-3PS-MV00-T0002 §2.2.4 DOE-STD-1020-94 §2.3.3 (page 2-15)	
2.8	Evidence that connecting structural supports and piping (and the associated dynamic coupling effects) are properly represented in the analytical model	Equipment specification and/or data sheet 24590-WTP-3PS-SS90-T0001 §6.2.3 24590-WTP-3PS-MV00-T0002 §2.2.4 DOE-STD-1020-94 §C.6.1, Items 2 & 3 (page C-58)	
2.9	Identification of the best estimate of all non-seismic demands expected to occur concurrently with a DBE (in a comparable format to the code allowable values)	Equipment specification and/or data sheet 24590-WTP-3PS-SS90-T0001 §4 and §5 24590-WTP-3PS-MV00-T0002 §2.2.4 DOE-STD-1020-94 §2.3.2 (page 2-12)	
3	**Results/Conclusions**		
3.1	Identification of the important natural frequencies of the equipment (or the peak of the design response spectrum must be used)	24590-WTP-3PS-SS90-T0001 §6.1.1(a) and §6.1.2(a) 24590-WTP-3PS-MV00-T0002 §2.2.4 DOE-STD-1020-94 §2.2 (page 2-4)	done
3.2	Identification of the computed elastic seismic response of the equipment (in a comparable format to the code allowable values)	24590-WTP-3PS-SS90-T0001 §7.1.2(g) 24590-WTP-3PS-MV00-T0002 §2.2.4 DOE-STD-1020-94 §2.3.2 (page 2-12)	

SC-I/II Seismic Analysis Qualification and FEA Report Check List

	Required Data	Source Reference	Applicable Section of Seismic Qualification Report
3.3	Description of how the analyses address the distribution of resulting seismic-induced inertial forces and evaluation of the load path(s)	24590-WTP-3PS-SS90-T0001 §7.1.2(g) 24590-WTP-3PS-MV00-T0002 §2.2.4 DOE-STD-1020-94 §2.2 (page 2-4)	
3.4	Description of method used to combine seismic and non-seismic loads (using code-defined load factors) and to compare the result with code-defined strength or stress levels to confirm the design is adequate	Equipment specification and/or data sheet 24590-WTP-3PS-SS90-T0001 §5 24590-WTP-3PS-MV00-T0002 §2.2.4 DOE-STD-1020-94 §2.3.2 (page 2-12)	
3.5	Identification of relative seismic anchor motion (SAM) between equipment and interconnected piping	24590-WTP-3PS-SS90-T0001 §7.4 24590-WTP-3PS-MV00-T0002 §2.2.4 DOE-STD-1020-94 §2.2 (page 2-6) and §2.4.1 (page 2-19)	
3.6	Identification of reaction loads on connecting structural supports and piping (individual loads as well as load combinations)	24590-WTP-3PS-SS90-T0001 §7.2	
4	**Quality Assurance**		
4.1	Signature of responsible engineer who performed the calculation	24590-WTP-3PS-MV00-T0002 §2.2.4 NQA-1-1989 DOE-STD-1020-94 §1.4 (page 1-7) and §C.8 (page C-65)	
4.2	Signature of engineer(s) who checked the calculation for numerical accuracy, and theory and assumptions	24590-WTP-3PS-MV00-T0002 §2.2.4 NQA-1-1989 Supplement 3S-1 DOE-STD-1020-94 §1.4 (page 1-7) and §C.8 (page C-65)	
4.3	Description of theory (analytical method) and assumptions used in the seismic analyses	NQA-1-1989 Supplement 3S-1 24590-WTP-3PS-SS90-T0001 §7.1.2(g)	
4.4	Description of computer program(s) used in the analyses, including model(s) used, input values, and output results calculated by the computer program	24590-WTP-3PS-SS90-T0001 §7.1.2(g) 24590-WTP-3PS-MV00-T0002 §2.2.4 NQA-1-1989 Supplement 3S-1 DOE-STD-1020-94 §C.8 (page C-65)	
4.5	Printout of output of computer analyses, including signature of responsible engineer who performed the computer analyses on first page of output	24590-WTP-3PS-MV00-T0002 §2.2.4 NQA-1-1989 Supplement 3S-1 DOE-STD-1020-94 §C.8 (page C-65)	

SC-I/II Seismic Analysis Qualification and FEA Report Check List

Required Data	Source Reference	Applicable Section of Seismic Qualification Report
4.6 Documentation or reference to documentation of verification of computer program accuracy	24590-WTP-3PS-SS90-T0001 §7.1.2(g) 24590-WTP-3PS-MV00-T0002 §2.2.4 NQA-1-1989 Supplement 3S-1 DOE-STD-1020-94 §C.8 (page C-65)	

ATTACHMENT #7

STRUCTURAL ANALYSIS REQUIREMENTS

Table of Contents

Page V-

LIST OF TABLES 118

LIST OF FIGURES 119

1.0 INTRODUCTION 121
- 1.1 Vessel Analysis per ASME Section VIII – Div. 1 and 2 Codes [1] 121
- 1.2 Skid Analysis per ANSI/AISC N690 [14] 122
- 1.3 Piping Analysis per ASME B31.3 [29] 122
- 1.4 Design Input Interfaces 123

2.0 VESSEL ANALYSIS METHODOLOGY 128
- 2.1 Classification of Stresses 129
- 2.2 Modal Response Spectrum Analysis 129
- 2.3 FEA Vessel Models and GTSTRUDL Piping Models 130
- 2.4 Stress Combinations 131
- 2.5 Ambient and Vessel Wall Temperatures 132
- 2.6 Pressures During Normal Operation and Seismic Event 133
- 2.7 Design Conditions 133
- 2.8 Operating Conditions 133
- 2.9 Incorporation of Under-Tolerances and Mill Tolerances 134
- 2.10 Nozzle Neck Thickness Calculation for Reinforcement Region 135
- 2.11 Vessel Buckling 135
- 2.12 Thermal and Seismic Anchor Movements at Vessel Nozzles 136
- 2.13 Flow Induced Vibration in Heat Exchangers 136
- 2.14 Seismic Loads on Bolted Flange Connections 136
- 2.15 Use of Higher Allowable Stresses for 304 and 316 Stainless Steel Materials 136
- 2.16 Parametric Study: 4-Node Shell Elements FEA and 3D Brick Elements FEA 137
- 2.17 Handling Loads 138
- 2.18 Internal Supports/Piping 138
- 2.19 Fatigue Analysis Requirement 138

3.0 SKID ANALYSIS METHODOLOGY 152
- 3.1 Applicable Codes 152
- 3.2 Applicable References for Inputs 152
- 3.3 Material 153

Table of Contents
(continued)

Page

3.4 Ambient Temperature From Contract Documents 153
3.5 Seismic Accelerations 153
3.6 Methodology 154
3.7 Loads and Load Combinations 156

4.0 PIPING ANALYSIS DATA AND METHODOLOGY 160

5.0 JUSTIFICATION FOR COUPLED AND DECOUPLED ANALYSES 170

6.0 ANALYSIS RESULTS DELIVERABLES 170

7.0 VERIFICATION AND VALIDATION 171

8.0 REFERENCES 172

APPENDIX A : PARAMETRIC STUDY – UTILIZING SHELL ELEMENT STRESSES AT NOZZLE/VESSEL INTERSECTIONS A-1

APPENDIX B : BECHTEL NATIONAL INC. CHECK LIST B-1

APPENDIX C : SELLER DESIGN VERIFICATION CHECK LIST C-1

APPENDIX D : EXAMPLES OF THE USE OF APPENDIX A PROCEDURES D-1

List of Tables

Page

Table 2-1: Stress Evaluation of Nozzle Walls Within the Limits of the Reinforcement Region 139

Table 2-2: Stress Evaluation of Nozzle Walls Outside the Limits of the Reinforcement Region 140

Table 2-3: Stress Evaluation of Vessel Walls Within and Outside the Limits of the Nozzle Reinforcement Region 141

Table 2-4: Normal and Abnormal Conditions Ambient Temperatures 142

Table 3-1: HEP1 – Applicable Figure Numbers for Spectra 158

Table 3-2: HEP2 – Applicable Figure Numbers for Spectra 159

Table 4-1: FEP & TLP Off-Gas Piping Analysis 161

Table 4-2: CNP Off-Gas Piping Analysis 162

Table 4-3: HEP1, FEP-A Recirculation Loop Piping System Coupled Evaluation 163

Table 4-4: HEP1, FEP-B Recirculation Loop Piping System Coupled Evaluation 164

Table 4-5: HEP1, TLP Recirculation Loop Piping System Coupled Evaluation 165

Table 4-6: CNP Recirculation Loop Piping System Coupled Evaluation 166

Table 4-7: HEP-1 FEP & TLP Vacuum Equipment Piping & Support Evaluation 168

Table 4-8: HEP-2 CNP Vacuum Equipment Piping & Support Evaluation 169

Table A-1: Maximum Linearized and Peak SI from Solid Brick Element Models of Several Nozzle/Vessel Configurations A-7

Table A-2: Comparison of Maximum SI from Shell Elements at Modeled Mid-Surfaces to Maximum Linearized Brick Element SI A-8

Table A-3: Comparison of Shell Element SI at Outer Surface Intersection Locations to Maximum Linearized Brick Element SI A-9

Table A-4: ANSYS Linearization Results for the TLP Reboiler 2" Nozzle N06 Local Solid Brick Element Model at the Maximum Linearized Stress Location in the Vessel A-10

Table A-5: Brick Element Model Mesh Refinement Details A-11

Table A-6: List of ANSYS Input File for Parametric Study A-12

List of Figures

Page

Figure 1-1: HEP1 - Process Flow Streams of FEP and TLP Evaporator Systems 124

Figure 1-2: HEP2 - Process Flow Diagram of CNP Evaporator System 126

Figure 1-3: Structural Analysis Process Flow Diagram 127

Figure 2-1: Vector Load Stresses Combination with Seismic Load Stresses 151

Figure A-A-1: Vessel Thickness / Nozzle Thickness vs. Brick Element Vessel Stress Multiplier (Peak SI / Linearized SI) A-13

Figure A-A-2: Vessel Thickness / Nozzle Thickness vs. Brick Element Nozzle Stress Multiplier (Peak SI / Linearized SI) A-14

Figure A-A-3: Comparison of ANSYS Shell Element and Brick Element Results for TLP Reboiler Vessel, 2" Nozzle N06 Model A-15

Figure A-A-4: Vessel Thickness/Nozzle Thickness vs. Shell SI to Brick Element Linearized SI Ratio for Vessel Stresses A-16

Figure A-A-5: Vessel Thickness/Nozzle Thickness vs. Shell SI to Brick Element Linearized SI Ratio for Nozzle Stresses A-17

Figure A-A-6: Stress Multipliers for Vessel Peak Stresses, Based on the Vessel Stress Multiplier Bounding Line of Figure A-1 Divided by the Bounding Line Data of Figure A-4 ..... A-18

Figure A-A-7: Stress Multipliers for Nozzle Peak Stresses, Based on the Vessel Stress Multiplier Bounding Line of Figure A-2 Divided by the Bounding Line Data of Figure A-5 ..... A-19

Figure A-A-8: Element Mesh in the TLP Reboiler Vessel ANSYS FEA Shell Element Model Near the Vessel/Nozzle Intersection of the 2" Nozzle N06 ..... A-20

Figure A-A-9: Element Mesh in the TLP Reboiler ANSYS FEA Local Shell Element Model Near the Vessel/Nozzle Intersection of the 2" Nozzle N06 ..... A-21

Figure A-A-10: Element Mesh in the TLP Reboiler ANSYS FEA Local Solid Brick Element Model Near the Vessel/Nozzle Intersection of the 2" Nozzle N06; w/o Element Details A-22

Figure A-A-11: Element Mesh in the TLP Reboiler ANSYS FEA Local Solid Brick Element Model Near the Vessel/Nozzle Intersection of the 2" Nozzle N06; Sectioned to Show 3-D Details A-23

Figure A-A-12: TLP Reboiler ANSYS FEA Brick Element Model From Figure A-11, Mesh Refined at Fillet/Vessel Region for Local Stress Evaluation A-24

Figure -A-13: TLP Reboiler ANSYS FEA Brick Element Model From Figure A-11, Mesh Refined at Fillet/Nozzle Region for Local Stress Evaluation A-25

Figure A-A-14: TLP Reboiler ANSYS 2" Nozzle N06 FEA Brick Element Model; Stress Intensities . A-26

Figure A-A-15: TLP Reboiler ANSYS 2" Nozzle N06 FEA Brick Element Model; Maximum Stress Intensities at Fillet/Vessel Region A-27

Figure A-A-16: TLP Reboiler ANSYS 2" Nozzle N06 FEA Brick Element Model; Stress Intensities . A-28

Figure A-A-17: TLP Reboiler ANSYS 2" Nozzle N06 FEA Brick Element Model; Maximum Stress Intensities at Fillet/Nozzle Region A-29

Figure A-A-18: TLP Reboiler ANSYS 2" Nozzle N06 FEA Shell Element Model; Stress Intensities With All Elements Selected A-30

Figure A-A-19: TLP Reboiler ANSYS 2" Nozzle N06 FEA Shell Element Model With Elements Within Nozzle/Vessel Intersection Removed; Stress Intensities A-31

Figure A-A-20: TLP Reboiler ANSYS 2" Nozzle N06 FEA Shell Element Model With Elements Within Nozzle/Vessel Intersection Removed; Maximum Local Stress Intensities A-32

Figure D-1: Example for Determining Linearized and Peak SI for a Nozzle at the Vessel Intersection .D-3

Figure D-2: Example for Determining Linearized and Peak SI for a Vessel at the Nozzle Intersection .D-4

1.0 INTRODUCTION

This document provides the analytical methodology and assumptions to be used in preparing analyses for certain evaporator components. (See Figures 1-1 and 1-2 for diagrams showing the main components of HEP1 and HEP2 evaporator systems in Seller' s workscope). This document is that report.

The purpose of this report is to ensure that the resultant analyses present a rational narrative that allows a qualified reviewer to understand the process used and the conclusions reached. The methodology used in resultant analyses will be accompanied by a logical justification or verification. In general, three types of analyses will be performed by Seller, each requiring unique modeling and methodology: (1) a global coupled analysis of each entire evaporator system (TLP, FEP-A, FEP-B, and CNP) using GTStrudl; (2) component analyses using either vessel/skid models or piping models; and (3) skid analyses (See Figure 1-3 for a Structural Analysis Process Flow Diagram of the three different types of analyses). Loads obtained from the coupled analyses will be used as input to the component analyses and loads from the component analyses will be used as input to the skid analyses. The following types of component analyses are addressed in this report:

1.1 Vessel Analysis per ASME Section VIII – Div. 1 and 2 Codes [1][1]

The vessels covered are:

TLP/FEP A/B Recirculation Pumps and CNP Recirculation Pump
(Per API-610-1995 [28] as applicable)
TLP Reboiler, FEP A/B Reboilers and CNP Reboiler
TLP Separator Vessel, FEP A/B Separator Vessels and CNP Separator Vessel
TLP/FEP A/B Primary Condensers and CNP Primary Condenser
CNP Distillation Column
TLP/FEP A/B /CNP Vacuum Systems

The seismic qualification analysis for the vessels will be performed using the ANSYS software program to the requirements of ASME Section VIII, Div. 2 Code. The ANSYS model will have the following features:

- 3-D vessel models will be developed using 4-node shell elements including the vessel internals modeled with shell or beam elements as appropriate
- 3-D vessel support structure model using beam elements
- The vessel model is coupled to its support structure
- The vessel model includes all large bore nozzles and representative small bore nozzles
- The boundary conditions for the vessel and support structure will be defined to represent the actual conditions
- The applied nozzle loads (DW, TH and Seismic) shall comply with Buyer contractual requirements. Recirculation and Off-Gas nozzle loads are developed by Seller. All other nozzle loads are specified by Buyer
- Differential seismic floor displacements are included in the model per Buyer contractual requirements
- Room and vessel temperature load cases are included in the model. Room temperatures are specified by Buyer

[1] The number in the brackets indicates reference number.

- ISRS provided by Buyer for the WTP Site Specific Ground Motion (WSGM) ISRS curves will be used in the dynamic response spectrum analysis with 4% critical damping. The three directional responses are combined per Buyer contractual requirements
- Load combinations are in accordance with the ASME Section VIII, Div. 2 Code

The ANSYS analysis also generates the following design input:

- Nozzle flexibility matrices for the recirculation, off-gas, and vacuum system piping coupled analyses
- Support loads for use in the structural qualification of the vessel support structure
- Thermal and seismic anchor displacements

1.2 Skid Analysis per ANSI/AISC N690 [14]

(As supplemented by Buyer SDC 24590-WTP-DC-ST-01-001 [20])

The skids covered are:

TLP/FEP A/B Recirc Pumps and CNP Recirc Pump
TLP Reboiler, FEP A/B Reboilers, and CNP Reboiler
TLP Separator Vessel, FEP A/B Separator Vessels and CNP Separator Vessel
TLP/FEP A/B Primary Condensers and CNP Primary Condenser
CNP Distillation Column

The seismic qualification analysis of the skids/support structures will be performed using the GTSTRUDL software program to the requirements of ANSI/AISC N690 Code. The GTSTRUDL model will have the following features:

- 3-D support structure model using beam elements
- Stick vessel model with no mass rigidly connected to the support structure
- The boundary conditions for the support structure will be defined to represent the actual conditions
- Vessel support loads that are generated from the ANSYS analysis and applied statically at the vessel support lug interface
- Any pipe support loads that may be present from the recirculation piping coupled analysis
- Dead weight loads from support structure members and seismic inertia loads

1.3 Piping Analysis per ASME B31.3 [29]

The piping systems covered are:

TLP and FEP A/B Off-Gas Piping
CNP Off-Gas Piping
FEP-A Recirculation Loop Piping System
FEP-B Recirculation Loop Piping System
TLP Recirculation Loop Piping System
CNP Recirculation Loop Piping System
FEP A/B and TLP Vacuum Equipment Piping & Support Evaluation
CNP Vacuum Equipment Piping & Support Evaluation (including CNP Condenser Condensate Piping)

The seismic qualification analysis of the piping systems will be performed using the following software programs to the requirements of ASME B31.3 Code:

- The GTSTRUDL program will be used for the FEP-A, FEP-B, TLP and CNP recirculation piping system coupled dynamic analyses using stick models to represent the vessels, support structures, and piping. It is noted that GTSTRUDL does not perform ASME B31.3 Code piping qualification. Seller has developed a spreadsheet that uses the GTSTRUDL results to perform the ASME B31.3 Code piping qualification which is then followed by manual verification. The recirculation piping is qualified in this manner. Each evaporator system model will include the separator vessel in its frame structure, reboiler in its frame structure, recirculation pump in its frame structure, and interconnecting recirculation piping/jumpers. Off-gas piping, and primary condenser and its frame structure may not be included in the model. The flexibility matrices for each recirculation piping nozzle will be included in the coupled analysis model. The coupled dynamic analysis will be performed using the revised ISRS curves provided by Buyer and will account for the seismic differential movement between the 0' and 56' floors. Conservatively 4% critical damping will be used to perform the coupled dynamic analysis
- The AutoPIPE program may be used for the FEP-A, FEP-B, TLP and CNP off-gas and vacuum system piping decoupled dynamic analyses. The decoupling criteria of Section 3.1.7 of ASCE 4-98 will be used to justify decoupling the piping from the applicable vessels. The decoupled dynamic analysis will be performed using the revised ISRS curves provided by Buyer or ITRS as required. 4% critical damping will be used to perform the decoupled dynamic analysis per Buyer Specification 24592-WTP-DC-PS-01-001 [21]

Each of the above analysis will clearly identify a) scope boundaries, b) governing analytical codes, c) assumptions, d) boundary conditions, e) interface requirements, f) governing evaluation criteria codes, and g) reaction loads at interface boundaries as applicable.

Handling and lifting equipment are not within the scope of this document.

1.4 Design Input Interfaces

All wall and floor penetrations for piping evaluated by Seller will have full freedom of movement, with no restraints. Buyer and Seller will coordinate and evaluate penetration clearances

Any insulation for vessels and piping will be defined by Buyer or assumed to be absent

The water lines to the condensers and steam line from the CNP Desuperheater to the CNP Reboiler must be defined by Buyer

1	Steam to Desuperheater	10	Vent from Primary Condenser	20	CW to Pri Cond
2	Desuperheater Water	11	Outside Air	21	CW from Pri Cond
3	Steam to Reboiler	12	Vent from Reboiler Shell	22	CW to Intercondenser
4	Gravity Drain from Reboiler	13	Vent from Vacuum System	23	CW to Aftercondenser
5	Feed (FEP,) SBS Cond (TLP)	14	High Pressure Steam (Ejector 1)	24	CW from Intercondenser
6	Circ Liquor to Reboiler	15	High Pressure Steam (Ejector 2)	25	CW from Aftercondenser
7	Circ Liquor from Reboiler	16	Condensate from Pri Cond	26	Process Condensate to Mesh
8	Concentrate	17	Condensate from Inter Cond	27	Anti Foam Addition
9	Vapor to Primary Condenser	18	Condensate from After Cond	28	Steam Condensate to SCW
		19	Process Condensate	29	Treated LAW Feed (TLP Only)

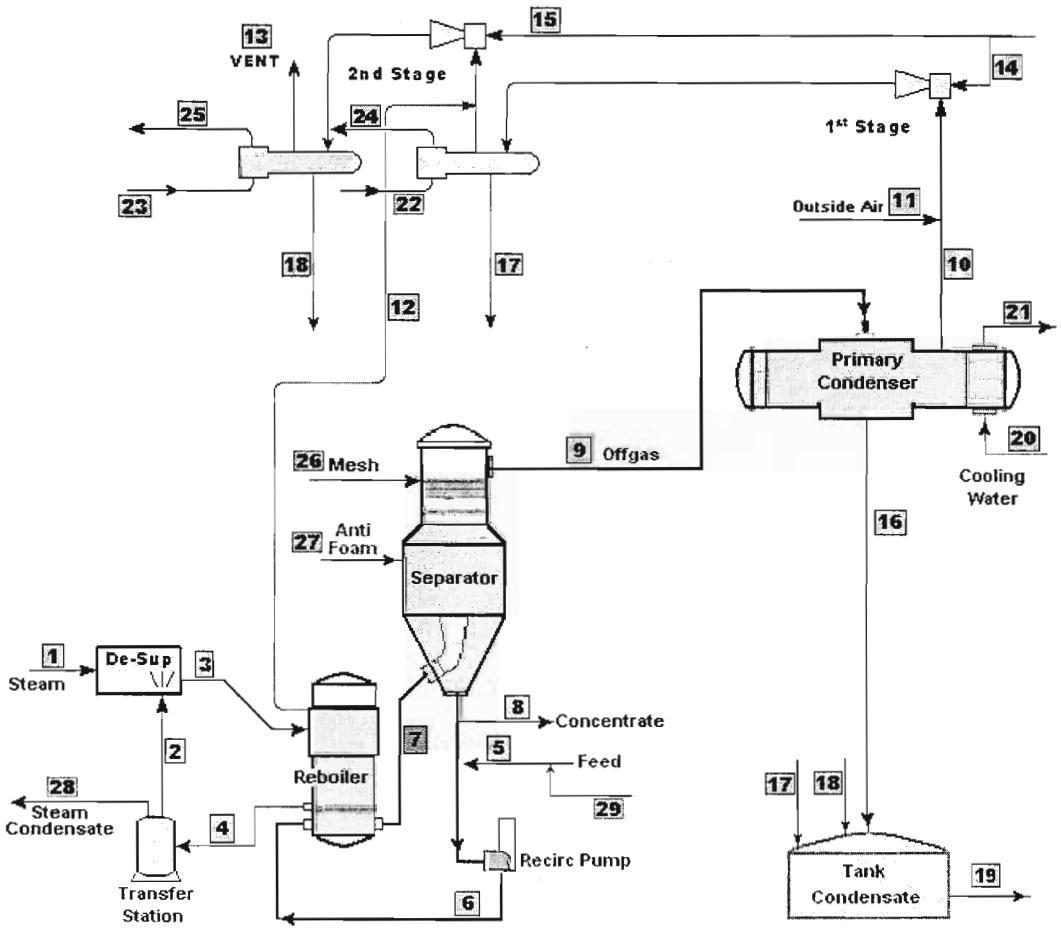

NOTE: Desuperheater, Transfer Station and Condensate tank are not part of the global analysis, and they are SC – III.

Figure 1-1: HEP1 - Process Flow Streams of FEP and TLP Evaporator Systems

1	Plant Steam	11	Vent from Pri Cond	22	Recovered Eluant
2	Desup Water	12	Vacuum Control Air	23	Condensate out
3	Steam to Reboiler	13	Vent from Reboiler Shell	24	CW to Primary Cond
4	Steam Condensate	14	Vent from Vacuum System	25	CW from Primary Cond
5	Feed	15	HP Steam to Ejector #1	26	CW to Inter Condenser
6	Circ to Reboiler	16	HP Steam to Ejector #2	27	CW from Inter Condenser
7	Circ from Reboiler	17	Condensate in Pri Cond	28	CW to After Condenser
8	Concentrate	18	Condensate from Inter Cond	29	CW from After Condenser
9	Vapor from Separator	19	Condensate from After Cond	30	Proc Cond to Mesh Spray
10	Vapor from Dist Col	20	Condensate from Pri Cond	31	Steam Cond to Receiver
		21	Condensate to Dist Col	32	Reflux

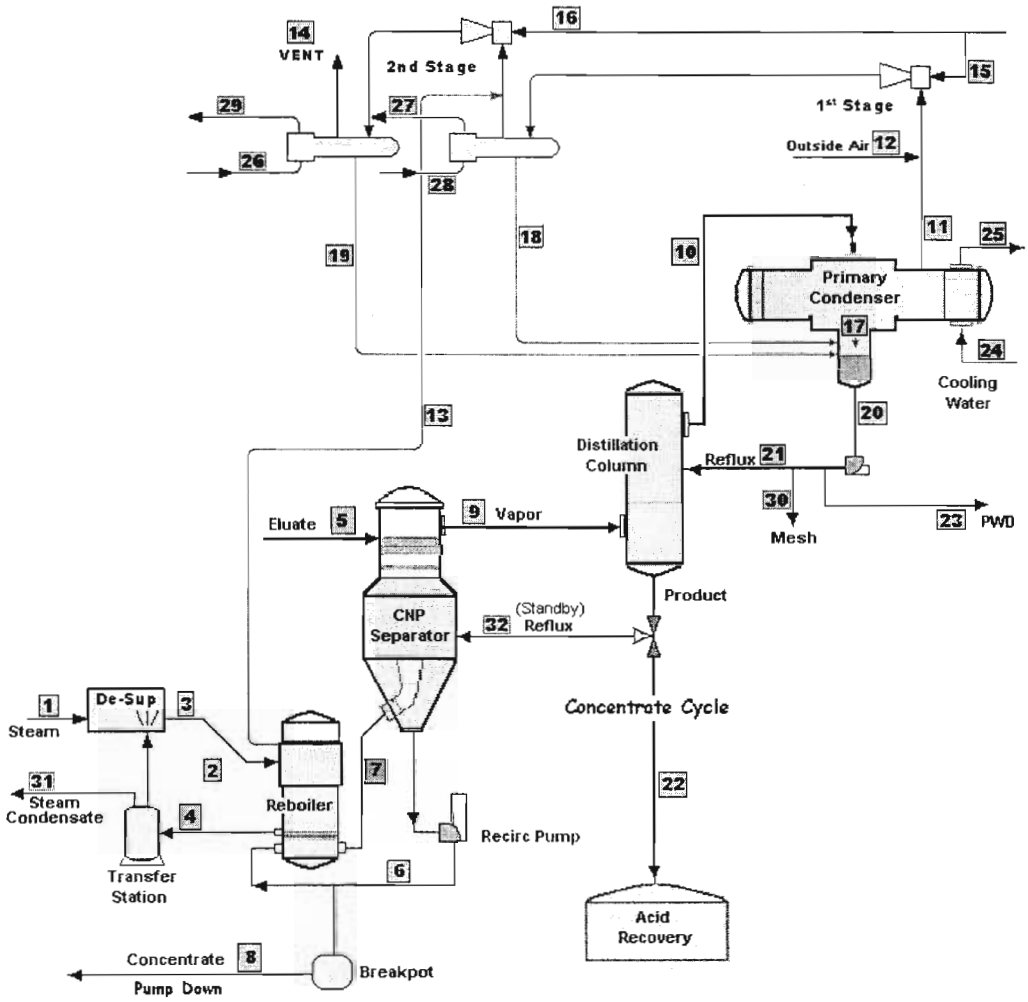

NOTE: Desuperheater, Transfer Station, Breakpot and Acid Recovery tank are not part of the global analysis, and they are SC – III.

Figure 1-2: HEP2 - Process Flow Diagram of CNP Evaporator System

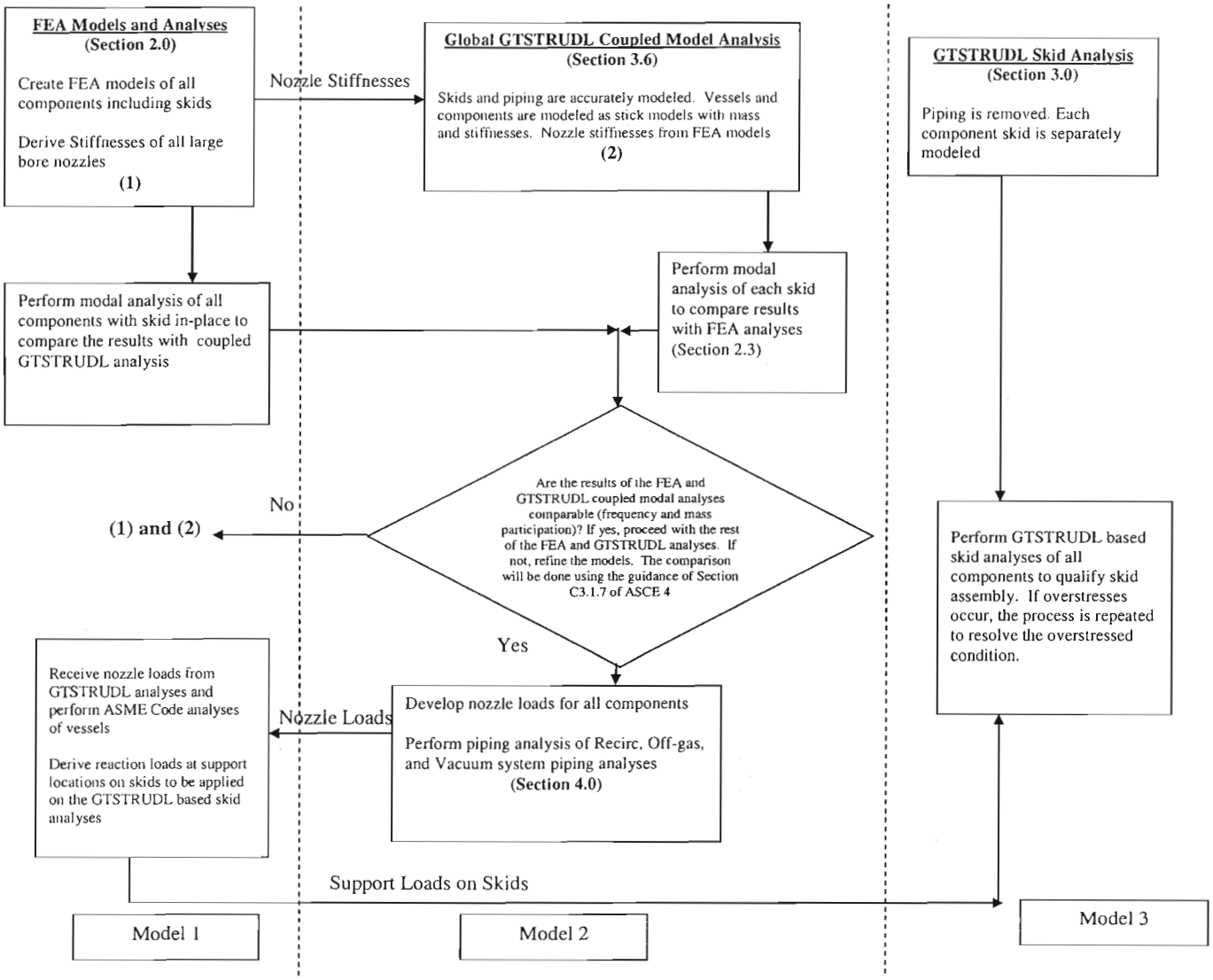

Figure 1-3: Structural Analysis Process Flow Diagram

2.0 VESSEL ANALYSIS METHODOLOGY

This report addresses the following items:

1. Incorporation of nozzle thermal loads as primary loads and nozzle piping transition region analysis per Paragraph 4-138 of Section VIII – Div. 2 of the ASME Code (Sections 2.1, 2.4 and 2.10)[2]

2. Seismic Analysis Methodology (Sections 2.2 and 2.3)

3. Comparison of 4-node shell element FEA stresses, 3D brick element FEA stresses, WRC107 [2] stresses at the nozzle to vessel attachments, and revised interpretation of FEA stresses using 4-node shell elements (Section 2.16 and detailed report is presented in Appendix A)

4. Incorporation of under-tolerance, mill tolerance, and corrosion allowances per UG-16(c) and (d) and UG-45 foot note 25 of the ASME Section VIII – Div. 1 Code; and also paragraph AF -105 of the ASME Section VIII- Div. 2 Code (Section 2.9). Note that references to fabrication requirements of ASME Section VIII- Div. 2 in this report are for information only.

5. Nozzle neck region analysis per UG45/UG22 of Section VIII – Div. 1 of the ASME Code (Section 2.10)

6. Stress combinations of different operating loads with seismic loads (Section 2.4)

7. Vessel thermal stresses due to differential ambient and vessel wall temperatures during operation (Section 2.5)

8. Pressure during normal operation and during the seismic event (Section 2.6)

9. Vessel Buckling due to external loads and negative (vacuum) operating pressure (Section 2.11)

10. Reaction Loads at Support Points (Section 2.3)

11. Thermal and Seismic Movements at Vessel Nozzles (Section 2.12)

12. Decoupling of Off-Gas piping from vessels per ASCE 4 [30] (Section 2.3)

13. Flow Induced Vibration in Heat Exchangers (Section 2.13)

14. Seismic loads on Bolted Flanged Connections (Section 2.14)

15. Use of Higher Allowable Stresses for 304 and 316 Stainless Steel Materials (Section 2.15)

16. Pressures and Temperatures for Design and Operating Conditions (Sections 2.7 and 2.8)

17. Handling Loads (Section 2.17)

[2] Section number in the parenthesis refers to the Section number in this report.

18. Sloshing effects in any partially filled vessel will be considered per the requirements of Section 3.5.4.5.4 of ASCE 4-98 [30].

It should be noted that all the HEP1 and HEP2 vessels will be (or have been) fabricated using the ASME Section VIII- Div. 1 requirements and they all will meet the design analysis requirements of Div. 1 performed by the vessel vendors. The welds between the vessel and vessel support lugs will be evaluated to ASME Section VIII requirements. The weld forces may be determined in accordance with Table 5 of Blodgett, "Design of Welded Structures" [39]. The additional analytical requirements resulting from Appendices 4 and 5 of ASME Section VIII- Div.2, and the Buyer specifications or Buyer request will also be incorporated in the HEP1 and HEP2 vessels. These analyses will not circumvent any existing or future Div. 1 analyses. This approach is consistent with paragraph U-2(g) of Div. 1.

2.1 Classification of Stresses

All analyses previously submitted to Buyer were based on the Buyer specification 24590-WTP-3PS-MV00-T0001 [4], which stipulated that the nozzle thermal loads be considered as secondary loads. During the review meetings that took place in early 2008, Buyer pointed out that the nozzle thermal loads should be treated as primary loads. Revision 3 of the Buyer specification is to be incorporated into the contract which deletes the section in question. Based on Paragraph 4-138 of ASME Section VIII – Div. 2, nozzle thermal loads (defined as the restrained free end displacement load of the attached pipe) in the nozzle reinforcement region are required to be considered as primary loads. As a result, nozzle to vessel shell attachment regions will be divided into the following different regions based on the classification of stresses presented in Table 4-120.1 of ASME Section VIII-Div. 2:

Table 2-1: Stress Evaluation of Nozzle Walls Within the Limits of the Reinforcement Region

Table 2-2: Stress Evaluation of Nozzle Walls Outside the Limits of the Reinforcement Region

Table 2-3: Stress Evaluation of Vessel Walls Within and Outside the Limits of the Nozzle Reinforcement Region

Stress classifications, allowable stresses, and the stress analysis methods for the nozzles, vessel reinforcement regions, and vessel walls are presented in Tables 2-1 through 2-3 in conjunction with Figure 2.1. The Region numbers referenced in Tables 2-1 through 2-3 are depicted in Figure 2-1.

2.2 Modal Response Spectrum Analysis

Paragraph 6.1.1 of Buyer Specification 24590-WTP-3PS-SS90-T0001 [19] provides guidance on dynamic analysis modeling. All FEA vessel models include the vessel and vessel internals with their appropriate mass. Therefore, no discrete masses and weightless springs are used in the FEA models. The following approach based on the Buyer specification will be used for the FEA modeling.

The modes are considered as significant, if the corresponding natural frequencies are less than the Zero Period Acceleration (ZPA) frequency, and the response calculated from these modes are greater than 10% of the total response obtained from the lower modes. This approach is acceptable provided at least 90% of the loading/inertia is contained in the modes used.

Paragraph 6.1.3 of Buyer Specification 24590-WTP-3PS-SS90-T0001 [19] provides guidance on combination of modal responses. Based on Section 3.2.7.1.1 (a) of ASCE 4 [30], the responses of the individual modes in each earthquake direction are combined using the Complete Quadratic Combination (CQC) method. The total seismic response is computed by combining the co-directional response from the two horizontal and the vertical analyses by the Square Root of the Sum of the Squares (SRSS) method.

The resultant seismic stresses will be combined with other stresses on a stress component basis as explained in Section 2.4. The seismic stresses will not be considered in the fatigue evaluation.

2.3 FEA Vessel Models and GTSTRUDL Piping Models

All ANSYS FEA vessel models are decoupled models and include only the vessel boundaries as identified in their ASME Section VIII-Div. 1 analysis. The recirculation loop piping connected to the vessels is not part of the FEA models, but the vessel internals are included in the ANSYS FEA models. The vessels are coupled with their support frames/skids in the ANSYS FEA models. Further clarification is provided in Section 5.0. The following is the approach Seller utilized and will continue to use in performing the seismic reanalysis effort for the vessels, their support frames/skids and the qualification of the recirculation piping:

1. Stiffnesses of the large bore nozzles are derived from the vessel ANSYS FEA models and then input to the GTSTRUDL coupled models which include the Recirculation Piping. The ANSYS FEA models, as stated earlier, do not contain the connected piping. Seller believes that the attached piping is more flexible than the vessels and if the piping was coupled to the vessels, the frequencies of the FEA model will further increase and this will produce lower accelerations since the existing frequencies are higher than the peaks of the amplified response spectra (ARS).

2. The GTSTRUDL coupled models contain the separators, reboilers, recirculation pumps, connecting recirculation piping, condensers/vacuum systems, rectifier (CNP only), respective vessel frames/skids, off-gas piping, steam line from the CNP desuperheater to the reboiler, and cooling water lines to the primary condensers . Seller will define in these coupled model analyses the mass and stiffness of each vessel stick model used. These models are used for development of input into recirculation piping analyses and development of nozzle loads for the ANSYS FEA vessel analyses.

3. Using the large bore piping nozzle loads from the GTSTRUDL coupled analyses along with other pressure, thermal, and seismic loads, ANSYS FEA vessel analyses are performed per the ASME Section VIII Div. 2 Code. In addition, based on these analyses, reaction loads at the vessels and pump support locations are developed. These reaction loads are then used in the frame analyses, as explained in the following step.

4. The frame structures of the GTSTRUDL coupled models are decoupled from the piping and vessels. The support loads derived from the ANSYS FEA vessel analyses are applied to analyze the frames per the AISC N690 Code. Seller will compare the support loads from both analyses for the TLP vessels to ensure that a gross discrepancy does not exist between the two analyses. In addition, the support loads from both GTSTRUDL and ANSYS analyses will be provided for Buyer to use in the verification of embedment plates, steel structural members and concrete floors or walls.

5. Seller will justify any governing base reaction differences greater than 10% between coupled analysis and ANSYS results.

6. Seller will, for each component type, determine the governing member(s) and perform comparisons of ANSYS and GTSRUDL results for all members whose GTSTRUDL interaction ratio (IR) exceeds (>) 75%

7. Seller will, for each component type, determine the governing member(s) and perform comparisons of ANSYS and GTSRUDL results for all welds whose interaction ratio (IR) exceeds (>) 90%

Further clarification and justification of the above analytical process and decoupling requirements of ASCE Std. 4 [30] are presented in Section 5.0.

2.4 Stress Combinations

The derivation of the maximum range of stress intensity (SI) between any two operating conditions is a requirement of Appendix 4 of Section VIII-Div. 2 Code. Paragraph 4-120 of the Div. 2 Code describes how the stress intensities (SI) are to be derived. Paragraphs 4-134 and 5-110.3 of the Div. 2 Code describe how the range of stress intensities between any two loadings is to be derived. Before the stress intensity is derived for a given load, all contributing stresses will be added on a component level.

Nozzle Load Combinations

Nozzle loads will be selected to maximize stresses in the nozzle reinforcement regions and vessel walls. The nozzle load directions will be either positive or negative and will be logically selected to maximize the stresses.

For Buyer-supplied nozzle loads, the deadweight, thermal and seismic loads will be treated as (+/-). However, for the Seller generated nozzle loads the signs of the deadweight and thermal loads will be taken into account and only the seismic loads will be treated as (+/-). If necessary, additional iterations may be performed for both sets of the above nozzle loads to ensure that the selected nozzle load directions are reasonable.

Seller will provide an appendix in each calculation documenting all nozzle load combinations evaluated and justification for selection of the nozzle load combination to be used in the qualification of the affected component.

DW + Pressure + Thermal Loads

The stresses due to these vector loads will be determined on the component level.

Summation of Component Stresses (Nozzle + DW + Pressure + Thermal)

All component stresses will be algebraically summed to determine principal stresses and stress intensity due to all vector loads.

Seismic Loads

Using the seismic spatial summation method SUMTYP, COMP, CQC Modal Combinations for X, Y, and Z spectrums will be used to derive and combine total component seismic stresses (SX through SZX) to determine seismic principal stresses S1, S2 and S3, and stress intensity SINT.

Final Load Combination

Principal stresses from the component/vector and seismic load combinations will be algebraically summed by using the ANSYS command "SUMTYP, PRIN" as shown in Figure 2-2.

2.5 Ambient and Vessel Wall Temperatures

General

In the current vessel analysis methodology, the principal focus is to use the combination of normal operating pressure and temperature conditions that produce the maximum range of stress intensity. Seller will conservatively select a set of temperature boundary conditions (vessel, ambient, and reference temperatures) that is likely to occur in combination with the dead weight + pressure + nozzle loads to produce the maximum range of stress intensity. In all future analyses, specific attention will be paid to address the minimum and maximum ambient and vessel wall temperatures, and what should be considered as the zero state (reference) temperature from which the minimum and maximum temperature differences will be measured.

The following temperatures will be considered in evaluating the maximum range of stress intensity due to primary + secondary stresses:

- The minimum design metal temperature (MDMT): This temperature will not be considered in any of the analyses. It is Seller's position that the MDMT is to be considered only for the impact testing of the materials, if required.
- Ambient Temperatures: These temperature values for normal operating and accident conditions were provided by Buyer and are presented in Table 2-4. The vessel support skids will be assumed to be at the ambient temperature for the evaluation of differential thermal stresses between the vessels and support skids. The accident condition ambient temperatures will not be considered with the seismic stresses for the range of stress intensity evaluation. However, all ambient temperatures will be considered for the derivation of range of stress intensities between different operating and accident conditions per 4-134 and 5-110.3 of Section VIII- Div. 2 Code.
- Vessel Wall Temperatures: These temperature values, maximum and minimum, will be retrieved from the Equipment Design Condition Documents, [10] and [11]. They will be considered for evaluation of differential thermal expansion stresses between the vessels and skids.
- Reference Temperature: 70°F will be used as the temperature from which the differential thermal stresses (expansion or contraction) will be evaluated.

Thermal Gradient Stresses in HEP1 and HEP2 Vessels

Based on the system descriptions presented in Buyer Documents 24590-PTF-3PS-MEVV-T0001 for HEP1 and 24590-PTF-3PS-MEVV-T0002 for HEP2 there are no specified time dependent thermal transients. Unlike the design of many components of nuclear steam supply systems, there are no fast cooldown or heat up or cold feed water injection transients associated with the HEP1 and HEP2 components. As a result, thermal gradient stresses in the vessel walls would be very small or negligible.

The fatigue assessment reports (References 12 and 13) were prepared for the exclusion of detailed fatigue analyses and to address the thermal stresses, fluctuations and fluctuation frequencies through the component wall being evaluated. Based on the conclusions from References 12 and 13, it is justifiable to exclude the through-wall thermal gradient stresses in the ASME Section VIII – Div. 2 analyses of the vessels. However, differential thermal stresses due to the temperature differences between the different compartments in a vessel or the temperature difference between the vessel, frame and ambient temperatures will be considered in the analyses.

To summarize, Seller will conservatively use the worst combination of events and temperatures to reduce the analytical efforts. Seller will use the latest data sheets as design input to the revised analyses. The ambient and vessel wall temperatures will be conservatively selected based on sound engineering judgment that will be justified in each report. A table similar to Table 2-7 will be included in each report that will define all necessary temperature data and load combinations. If this approach proves overly conservative, then the event-specific temperatures will be used for differential thermal stress analysis. It should be noted that the temperature discussions above are not relevant to the primary stress evaluation of Section 2.1.

2.6 Pressures During Normal Operation and Seismic Event

Buyer Specification 24590-WTP-3PS-MV00-T0002 [8], Seismic Qualification Criteria for Pressure Vessels, Section 6.1 states that "The seller is responsible for the analysis of the vessels according to the assigned seismic category. The analysis shall include dynamic loading resulting from seismic excitation while the vessel is operating under normal operating conditions". The normal operating pressure will be modified to account for static column heads of the process liquor in the separator vessels, reboilers and recirculation pumps for different operating conditions. The maximum operating vessel pressure during the seismic event will be increased by +15% or 2 psig (whichever is more conservative) and will be incorporated in all future analyses.

Table 2-10 presents elevations of the components and specific gravity of the process liquor for all three systems. Data presented in Table 2-10 will be used for the static head evaluation at the recirculation pumps and reboilers. It is noted that the static head in most cases could negate the vacuum condition in the recirculation pumps and reboilers. All analyses revisions will conservatively consider the static column heads of the process liquor.

2.7 Design Conditions

All design pressure and design temperature conditions specified in the HEP1 and HEP2 Equipment Design Conditions documents 51-5031985 [10] and 51-5063365 [11] will be considered for the primary stress allowable limits specified in Paragraphs 4-131, 4-132, 4-133 and 4-138 of the ASME Code Section VIII – Div. 2. In all analyses, wherever applicable, conservative combinations of design pressures and temperatures will be used. The same approach will be used in any future analyses revisions. The current maximum and minimum design pressure and temperature conditions for the HEP1 and HEP2 vessels are listed in Tables 2- 5 and 2- 6.

Design conditions include all specified mechanical loads that produce primary stresses. Also note that the ASME Code Section VIII-Div. 2 does not have separate allowable stresses for Level B (upset conditions), Level C (emergency condition), and Level D (Faulted condition) loads. Wherever seismic stresses are combined with other stresses, the primary stress allowables will be increased per Paragraph AD-140 and Table AD-150.1 of Section VIII- Div. 2.

2.8 Operating Conditions

Various operating conditions listed in HEP1 and HEP2 Equipment Design Conditions documents 51-5031985 [10] and 51-5063365 [11] will be considered for the primary + secondary range of stress intensity and primary + secondary + peak stress intensity allowables specified in Paragraphs 4-134 and 4-135 of the ASME Code Section VIII – Div. 2. In all existing analyses, wherever applicable, conservative combinations of operating pressures and temperatures were selected for efficiency in the analytical efforts. The same approach will be used in any future analyses revisions. The maximum and minimum operating pressure and temperature conditions for the HEP1 and HEP2 vessels are listed in Tables 2-5 and 2- 6. If this approach proves overly conservative, then each applicable operating condition may be analyzed separately.

Operational pressures, whenever used in seismic analysis, will be increased by 15% or 2 psig, whichever is more conservative. The effect of corrosion on the mass of components will be evaluated and defined in each analysis.

2.9 Incorporation of Under-Tolerances and Mill Tolerances

Seller has reviewed UG-16 (c) (d) and UG-45 of Section VIII-Div.1 [1] (also AD-602 and AF-105 of Section VIII- Div. 2) for under-tolerance requirements. The shell and large nozzle material for all vessels are (or will be) purchased per SA-240 or SA-312 of ASME Section II [7]. By reference, these material specifications include supplemental specifications SA-480 and SA-540 for dimensional and thickness requirements.
Note that references to fabrication requirements of ASME Section VIII- Div. 2 in this report are for information only.

Mill Under-Tolerance

A review of SA-480 and SA-540 reveals that plates specific to the subject projects (0.25" to 1.75" wall thickness) could be as much as 0.010 inch thinner than the nominal thickness and still would be acceptable per QA inspection. Paragraph UG -16 (c) of the ASME Section VIII-Div. 1 Code specifies "vessels made of plate furnished with an under-tolerance of not more than the smaller value of 0.010 inch or 6% of the ordered thickness may be used at the full design pressure for the thickness ordered." Based on Table A2.17 of SA-480 (required by SA-240), the tolerance under the specified thickness is 0.010 inch for all the plates of interest specific to HEP1 and HEP2 projects. All the plate materials are planned to be purchased, or have been purchased, using the standard mill tolerance of SA-480. Therefore, the incorporation of mill tolerances in any of the HEP1 and HEP2 projects analyses is not a requirement. However, if nozzles are fabricated from plate materials, Seller will use the 0.010 inch under tolerance for the nozzle neck minimum thickness analysis for pressure stress considerations, as implied in Paragraph AD-602 of Div. 2.

Table 2-8 presents a longitudinal stress calculation for a 24 inch diameter nozzle neck fabricated from plate material. In this example, similar to the COMPRESS Code, the pressure stress term includes both of the tolerances (0.010 inch mill tolerance plus the 0.040 inch corrosion allowance). However, note that the nozzle load axial stress term incorporates only the corrosion allowance.

In summary, plate material mill tolerance of 0.010 inch will be incorporated for pressure stress consideration in the minimum wall thickness analysis only when nozzles are fabricated from plate materials. In addition, the mill tolerances of 0.01 inch along with 0.04 inch corrosion allowance will be incorporated in the Div. 2 analysis.

Pipe Under-Tolerance

In the case where nozzles are fabricated from pipes, UG -16(d) states that the analysis thickness should incorporate the entire pipe under-tolerance. Paragraph UG-45 of Section VIII-Div. 1 (also AD-602 of Div. 2) requires a 12.5% under tolerance to be incorporated as part of the minimum thickness requirements for nozzle necks. Both Codes thus require under-tolerances to be incorporated in the nozzle sizing analyses for design loads. However, there are no similar requirements for under-tolerances to be taken into consideration for Div. 2 detailed analyses for operating conditions if the pipe materials are purchased to ASME Section II Code.
Based on the above discussion, Table 2-9 presents a longitudinal stress calculation for a 4 inch diameter nozzle fabricated from Sch. 80 pipe. In this example, similar to the COMPRESS Code analysis, the pressure stress term includes both tolerances (12.5% under tolerance and 0.040 inch corrosion allowance), and the nozzle load axial stress term incorporates only the corrosion allowance.

In summary, pipe tolerance of 12.5% will be incorporated for pressure stress consideration in the minimum wall thickness analysis when nozzles are fabricated from piping materials. Pipe tolerances will not need to be incorporated in any other Div. 1 or Div. 2 nozzle or vessel analysis for operating conditions.

Minimum Nozzle Neck Thickness Requirement

If nozzles are fabricated from piping materials, Seller will document that after incorporating the mill tolerances requirements for the piping materials in the minimum wall thickness evaluation, the remaining thickness of the piping meet the requirements of UG-45(b)(4) of ASME Section VIII-Div. 1 in corroded conditions. (Note that this is an ASME Section VIII - Div. 1 requirement that will be satisfied by vessel fabricators. However, Seller will include this documentation in Div. 2 analyses.)

2.10 Nozzle Neck Thickness Calculation for Reinforcement Region

Seller will analyze nozzles per UG-45/UG-22 of Div. 1 Code even though this is a part of the ASME Section VIII- Div.1 analyses generally performed by the vessel fabricators. The axial stresses due to DW + Thermal + Pressure + Seismic loads will be combined and the total stress will be compared against 1.2 x S per UG-23 (c) and 1.0 x S without seismic loads. The mill tolerance, pipe under-tolerance, and corrosion allowance will be incorporated as discussed in Section 2.9 and illustrated in Tables 2-8 and 2-9.

Table 2-8 illustrates a nozzle neck analysis where the nozzle is fabricated from plate material. A 0.01 inch under-tolerance along with 0.04 inch corrosion allowance is used for the pressure stress evaluation, and 0.04 inch corrosion allowance is used for the axial stress due to pipe loads.

Table 2-9 illustrates the nozzle neck analysis where the nozzle is fabricated from pipe material. A 12.5% mill-tolerance along with 0.04 inch corrosion allowance is used for the pressure stress evaluation, and 0.04 inch corrosion allowance is used for the pipe load axial stress. Note that the nozzle neck thickness example presented in Table 2-9 is in agreement with the Buyer provided example (N13 separator nozzle) that was generated using the COMPRESS Code.

As mentioned earlier in Section 2.9, Seller will apply the mill tolerances for nozzles made from plate along with the corrosion allowance in the proposed FEA models of the vessel nozzles.

2.11 Vessel Buckling

ASME Section VIII- Div. 1 analysis addresses vessel wall buckling due to external pressure. This is already addressed or will be addressed by vessel vendors in their vessel analysis using Codes similar to COMPRESS. The main objective of the nozzle reinforcements is to prevent buckling due to external nozzle loads in vessel walls. All nozzles meet Section VIII-Div. 1 Code and therefore, are sufficiently reinforced for HEP1 and HEP2 vessels. Seller will also address standard buckling due to external pressure on the piping within Seller scope using the methods of Section VIII Div. 1 or other appropriate means.

In addition, Seller will use FEA based axial compressive stresses (SZ component) to evaluate buckling in HEP1 and HEP2 vessels. Therefore, the buckling issue will be adequately addressed in Div. 1 and Div. 2 analyses. Please refer to Paragraph 5.4.1.2 of the ASME Publication, Guidebook for the Design of Section VIII Pressure Vessels. All the nozzle reinforcements are designed for 50 psi internal pressure. Therefore, they all conservatively meet the buckling and stability requirements for a maximum vacuum pressure of 14.7 psia.

2.12 Thermal and Seismic Anchor Movements at Vessel Nozzles

Seller will retrieve thermal movements at the vessel shell/nozzle interface for normal operating conditions at all nozzle locations and will provide these movements with appropriate orientations in all vessel reports. Similarly, vessel seismic inertia movements at all nozzles will be included in all the reports. These data will be based on the FEA analyses of the vessels. Seismic anchor movements (SAMs) and thermal anchor movements (TAMs) will be tabulated in each analysis. All movements will be provided using the FEA global coordinate system.

2.13 Flow Induced Vibration in Heat Exchangers

The HEP1 and HEP2 vessels that contain tube bundles, such as primary condensers, vacuum system condensers and reboilers, will be analyzed to examine the susceptibility of the tube bundles to flow induced vibrations. The evaluations will be based on the guidelines provided in the TEMA Standard [32] and will be performed by Seller or its vessel fabricators.

2.14 Seismic Loads on Bolted Flange Connections

The bolted vessel connections will be designed by the vessel fabricators using Appendix 2 of Section VIII- Div.1. The design loads considered are the internal design pressure and gasket seating loads based on the gasket material. Seismic loads are not part of the basic design of the bolted flange connection. This is also applicable for bolted flange connection design per Appendix 3 of Section VIII-Div. 2 Code.
In the HEP1 and HEP2 separator vessels and other vessels, the bolted connections are generally away from the vessel support locations where the seismic loads are significant. Based on the results from the existing FEA analyses, the seismic loads on the bolted connections are not significant and will have no effect in the vendor analyses per Section VIII – Div. 1.

2.15 Use of Higher Allowable Stresses for 304 and 316 Stainless Steel Materials

The majority of the vessels on Hanford Evaporator Projects are fabricated from either 304 or 316 stainless steel plate (SA240) or seamless pipe (SA312) materials.

ASME Code Section II – Part D, presents two different sets of allowable stresses for the same material; however, each set of allowables has different applicable notes. Based on a review of the notes in Table 1A of Section II – Part D, Note G5 is the only applicable note for the Hanford Projects which alerts the user with regard to the low yield strength of these stainless materials, and a possibility of slight permanent deformation. The rest of the notes in Table 1A are either applicable for elevated temperature applications and/or for welded pipes, but they are not applicable to HEP vessels.

Seller will use the following guidelines for the use of higher allowables for stainless steel materials.
Use higher allowable stresses except for the regions at or near the bolted or flanged connections.
The region where higher allowable stresses could be used must be away from the nearest edge of any bolted or flanged connection by a distance greater than $2.5\sqrt{Rt}$ as described in Paragraph AD-510 of Section VIII – Div. 2.
SA182 stainless steel forging materials, Grades 304 or 316, may not be used with higher allowable stresses.

2.16 Parametric Study: 4-Node Shell Elements FEA and 3D Brick Elements FEA

This Section presents the summary and conclusions of the parametric study provided in Appendix A. All HEP1 and HEP2 vessel FEA models are planned to be analyzed using the 4-node shell elements. Consequently, a nozzle to vessel intersection is simply the intersection of two cylinders (without fillet welds) at the vessel/nozzle shell mid-planes. Buyer has requested Seller to demonstrate how the shell element stresses will be used for deriving membrane, bending, and peak stresses required in Table 4-120.1 and Paragraph 4-138 of Section VIII-Div. 2 Code. In order to address the above issues and also to better understand the modeling differences between the 4-node shell elements and 3D brick elements, Seller has performed numerous additional analyses using 3D brick elements and performed a detailed parametric study which is documented in Appendix A. These analyses are localized models of vessel/nozzle intersections using different sizes of nozzles and vessels. Weld fillets modeled in the 3D brick element FEA models are based on the requirements of UW-16 of ASME Section VIII – Div. 1 Code. In the case of the 4-node shell element FEA models, nozzle to vessel connections were modeled as the intersection of two cylinders without fillet welds. The parametric study addresses the following items.

- How do the 4-node shell element nozzle and vessel stresses compare with the local membrane stresses (P_L) using 3D brick element FEA models at the nozzle to vessel interface?
- How do the 4-node shell element stresses compare with the linearized surface stresses ($P_L + P_b + Q$) using 3D brick element FEA models?
- How do the 4-node shell element stresses compare with the total peak surface stresses ($P_L + P_b + Q + F$) using 3D brick element FEA models?

Summary:

1. In the majority of cases, the FEA shell model surface stress intensities ($P_L + P_b + Q$) are conservative approximations of the linearized (primary + secondary) surface SI. Please note that the shell models only produce mid-plane membrane and linearized SI at the bottom and top surfaces.
2. Based on the study of the numerous FEA models using 4-node shell elements and 8-node brick elements, stress concentration factors (SCFs) were derived for the vessel shell and nozzle stresses. These SCFs can be applied to the 4-node shell element stresses to derive the peak SI ($P_L + P_b + Q + F$). Since the factors are applied to stress intensities instead of at the stress component level, these factors are identified as stress multipliers (SM). It was found that these SMs are dependent on the ratio of the vessel shell to nozzle shell thicknesses.
3. In most of the cases presented in Appendix A, the local membrane stress intensities (P_L or $P_L + P_b$) have been generally well within acceptable limits. Therefore, it was not necessary to make comparisons of shell element membrane stresses with the brick element membrane stresses.
4. FEA model element size will be determined and validated in the following manner:

   a) As discussed in the Parametric Study in Appendix A of this document, the element size at the nozzle/vessel intersections will depend on the vessel wall thickness. Element lengths along the nozzle axis in the vicinity of the nozzle/vessel intersections will be half (½) the vessel wall thickness. The aspect ratio of the elements at the vessel/nozzle intersections will be maintained to approximately lower than four.
   b) If the size and shape of the elements are not adequate, the ANSYS software automatically provides warnings and/or error messages which are regularly reviewed and addressed as appropriate.
   c) The error percentages in the stress results are reviewed and generally have been kept below 10%.

Conclusion:

The detailed parametric study has yielded several useful results that will be applied to improve the previous finite element analyses. The results from the shell element based analyses can now be used with a high level of confidence similar to that using analyses based on 3D brick elements. The methodology and results developed in this study will be documented in an Seller calculation.

Note, Seller will convert the parametric study (Appendix A) into a formal calculation such that it can be referenced in all applicable analyses. In addition, all software used on this project is controlled via the Seller Software QA procedures. The 3D brick element verification will be document in the ANSYS V&V report. This V&V report will be referenced in the calculations as applicable.

2.17 Handling Loads

A dynamic load factor of 1.5 times the maximum expected load will be applied at all lift points. The allowable design stress shall equal the applicable code allowable design stress at ambient temperature [Section 9.1 of Reference 37].

(Note that lifting and handling load design analysis of all the lugs, trunnions and vessels are (or will be) performed by the vessel fabricators per the ASME Code Section VIII-Div. 1 requirements.)

2.18 Internal Supports/Piping

Where applicable and as a method to demonstrate compliance with the ASME Code Section VIII Div 1, Seller will use AISC N690 as a guide for analysis of vessel internal supports and ASME B31.3 as a guide for analysis of vessel internal piping.

2.19 Fatigue Analysis Requirement

A fatigue analysis of these vessels is not required provided the peak stress intensity requirements of 97 and 106 ksi for HEP1 and HEP2 systems respectively, as documented in References 12 and 13, are met. In cases where the stress intensity criterion is not met, Seller and Buyer will coordinate any additional analysis requirements.

Table 2-1: Stress Evaluation of Nozzle Walls Within the Limits of the Reinforcement Region [Paragraph 4-138(b) of ASME Section VIII – Div. 2]

Region No.***	Origin of Stress	Type of Stress	Classification	Allowable	Method
1	Pressure + All Nozzle Loads + All Nozzle Moments [All loads including nozzle thermal loads and all moments but w/o discontinuity and w/o vessel thermal loads (temperature effects)]	General Membrane (Due to Pressure and Nozzle Loads and Moments) (Note: Nozzle bending load is classified as membrane load in the nozzle reinforcement)	P_m	S (Note 2)	Hand Calculation/FEA mid surface
2	Pressure + All Nozzle Loads + All Nozzle Moments + Discontinuity Effects (All Loads in No. 1 above which includes primary bending stress + Discontinuity, but without vessel thermal loads)	Local Membrane (Due to Pressure and Nozzle Loads and Moments + Discontinuity Effects) (Bending stress across full section of the nozzle is included)	$P_L + P_b^*$	1.5 x S (Note 2)	FEA – Mid surface stresses in the nozzle at gross discontinuity + bending stress in nozzle full section (Note 1)
3A	Pressure + All Nozzle Loads + All Nozzle Moments + Gross Discontinuity + Vessel Thermal Loads [All Loads in No. 2 above + include vessel thermal loads excluding local discontinuity (SCF)]	Range of Primary + Secondary Stress Intensity (Membrane + Bending linearized surface stress intensity at gross discontinuity)	$P_L + P_b^* + Q$	3 x S	FEA – Top/bottom surface stresses in the nozzle at gross discontinuity (Note 1)
3B	Same as Loads as in Region No. 3A including local discontinuity effects (SCF); but remove all pressure** and seismic loads	Primary + Secondary + Peak (Linear + Peak)	$P_L + P_b^* + Q + F$	Sa (Note 3)	FEA – Top/bottom surface stresses in the nozzle factored by stress multipliers (SM) (Note 1)

NOTE 1: The elements within the vessel wall that are connected to vessel shell will be removed before post processing the FEA results. Refer to Appendix A which summarizes the FEA parametric study performed by Seller
NOTE 2: Based on Table AD-150.1, where seismic loads are included, the allowable stresses are 1.2 x design allowable stresses
NOTE 3: For the HEP-1 vessels the total peak stress intensity limit is 97 ksi [12] and for the HEP-2 vessels it is 106 ksi [13]
* P_b stresses per Table 4-120.1 as applicable
** Based on Ref. 12 and 13 Fatigue Assessment Reports, the pressure loads are excluded per AD-160.2 (f) Condition B of Section VIII-Div. 2 Code
*** Refer to Figure 2-1 for vessel/nozzle regions and stress classifications.

DRAFT

Table 2-2: Stress Evaluation of Nozzle Walls Outside the Limits of the Reinforcement Region [Paragraph 4-138(c) of ASME Section VIII – Div. 2]

Region No.***	Origin of Stress	Type of Stress	Classification	Allowable	Method
4	Pressure + Nozzle (Axial + Shear +Torsion) Loads (Includes nozzle loads, but w/o nozzle bending moments and nozzle thermal loads. Vessel thermal stresses are also excluded)	General Membrane Due to Pressure + Primary Nozzle Loads	P_m	S (Note 2)	Hand Calculation/FEA mid surface
5	Pressure + Nozzle (Axial + Shear +Torsion) Loads + <u>All primary nozzle bending moments other than nozzle thermal loads</u> (All loads in No. 4 above + <u>all primary bending moments)</u>	Local Membrane Due to Pressure + Primary Nozzle Loads and Primary Moments near gross discontinuity (Bending stress across full section of the nozzle is included)	$P_L + P_b^*$	1.5 x S (Note 2)	Hand Calculation/FEA – Mid surface stresses in the nozzle near gross discontinuity + bending stress in nozzle full section (Note 1)
6A	Pressure + All nozzle loads and all nozzle moments + <u>Gross Discontinuity Effects + Vessel thermal loads</u> (excluding local discontinuity effects)	Range of Primary + Secondary Stress Intensity (Membrane + Bending linearized surface stress intensity near gross discontinuity)	$P_L + P_b^* + Q$	3 x S	FEA – Top/bottom surface stresses in the nozzle near gross discontinuity (Note 1)
6B	Same loads as in Region 6A above including local discontinuity effects (SCF), but <u>remove all seismic and pressure** loads</u>	Primary + Secondary + Peak (Linear + Peak)	$P_L + P_b^* + Q + F$	Sa (Note 3)	FEA – Top/bottom maximum surface stresses in the nozzle multiplied by SMs (Note 1)

NOTE 1: One row of elements beyond those removed for Table 2-1 will be removed before post processing the FEA results. If this approach proves overly conservative, then the elements removed will be based on the actual distance of the reinforcement region. Refer to Appendix A which summarizes the FEA parametric study performed by Seller.
NOTE 2: Based on Table AD-150.I [1], where seismic loads are included, the allowable stresses are 1.2 x design allowable stresses.
NOTE 3: For HEP-1 vessels the total peak stress intensity limit is 97 ksi [12] and for the HEP-2 vessels it is 106 ksi [13].
* P_b stresses per Table 4-120.1 as applicable
** Based on Ref. 12 and 13 fatigue assessment reports, the pressure loads are excluded per AD-160.2 (f) Condition B of Section VIII-Div. 2 Code
*** Refer to Figure 2-1 for vessel/nozzle regions and stress classifications

Table 2-3: Stress Evaluation of Vessel Walls Within and Outside the Limits of the Nozzle Reinforcement Region [Table 4-120 of Appendix A of ASME Section VIII – Div. 2]

Region No.***	Location	Origin of Stress	Type of Stress	Classification	Allowable	Method
7	Vessel and head shell regions remote from discontinuity	Pressure + All Nozzle Loads + All Nozzle Moments [All nozzle loads and moments but w/o vessel thermal loads (temperature effects)]	General Membrane	P_m (Note 1)	S	FEA – Mid surface stresses in the vessel wall remote from gross and local discontinuity
8	Shell Junctions with heads, flanges, and conicals & Nozzle reinforcements	Pressure + All Nozzle Loads + All Nozzle Moments + Gross Discontinuity Effects [All nozzle loads and moments but w/o vessel thermal loads (temperature effects)]	Local Membrane (Membrane + Bending)	P_L (Note 1)	1.5 x S	FEA – Mid surface stresses in the vessel wall near gross discontinuity after removing the nozzle during post processing
9A	Shell Junctions with heads, flanges, and conicals & Nozzle reinforcements	Pressure + All Nozzle Loads + All Nozzle Moments + Vessel Thermal Loads + Discontinuity Effects (All Loads in No. 4 above + <u>include discontinuity and vessel thermal loads)</u>	Range of Primary + Secondary Stress Intensity (Membrane + Bending linearized surface stress intensity)	$P_L + P_b^* + Q$ (Linearized Surface Stresses)	3 x S	FEA – Vessel maximum Top/bottom surface SI (near gross discontinuity) after removing nozzles during post processing
9B	Shell Junctions with heads, flanges, and conicals & Nozzle reinforcements	Same loads as above in Region No. 9A including local discontinuity effects (SCF); but <u>remove all pressure** and seismic loads</u>	Primary + Secondary + Peak (Linear + Peak)	$P_L + P_b^* + Q + F$	Sa (Note 2)	FEA – Vessel Top/bottom maximum surface SI multiplied by a SMs after removing the nozzle during post processing (Note 3)

NOTE 1: Based on Table AD-150.1 [1], where seismic loads are included, the allowable stresses are 1.2 x design allowable stresses.
NOTE 2: For HEP-1 vessels the total peak stress intensity limit is 97 ksi [12] and for the HEP-2 vessels it is 106 ksi [13].
NOTE 3: If this approach proves over conservative, use the results of the parametric study to derive peak stresses.
* P_b stresses per Table 4-120.1 as applicable
** Based on Ref. 12 and 13 fatigue assessment reports, the pressure loads are excluded per AD-160.2 (f) Condition B of Section VIII-Div. 2 Code
*** Refer to Figure 2-1 for vessel/nozzle regions and stress classifications

Table 2-4: Normal and Abnormal Conditions Ambient Temperatures

No.	Equipment	Room No.	Normal Operating Temperature (To)		Abnormal Condition Temperature (Ta)	
			Low	High	Low	High
			Degree F	Degree F	Degree F	Degree F
1	FEP Sep Vessels, FEP Off-Gas Piping, FEP Recirc Piping	P-0106	59	128	40	138
2	CNP Sep Vessel, CNP Off-Gas Piping, CNP Recirc Piping	P-0112	59	118	40	144*
3	TLP Sep Vessels, TLP Off-Gas Piping, TLP Recirc Piping	P-0117	59	133	40	144*
4	FEP/TLP/CNP Reboilers, Recirc Pumps, and Recirc Piping	P-0123	59	131	40	148*
5	FEP Condenser Skid	P-0304	59	117	40	131*
6	CNP Distillation Column, CNP Offgas Piping	P-0320	59	125*	40	130*
7	TLP Condenser Skid, TLP Offgas Piping	P-0325	59	126*	40	128*
8	CNP Condenser Skid, CNP Offgas Piping	P-0430	59	115	40	125*

NOTE: The temperature data is the latest at the time of issue of this document. Seller shall use the updated data provided individual MDS in section 2 of the MR. Seller is advised that the values for Normal Operating Temperature (To) listed in the Table 2-4 are actually corresponding to the Abnormal Temperature values provided in the individual MDS from section 2 of the MR. The values for Abnormal Condition Temperature (Ta) listed in the Table 2-4 are actually corresponding to the Design Basis Event temperature values provided in the individual MDS from section 2 of the MR. The Abnormal Condition Temperatures (Ta) listed in Table 2-4 will not be used with seismic loads.

* Previous approved temperature values in MDS are used for conservatism to prevent reiteration in calculation.

TABLE 2-5: HEP-1 Vessels Design and Operating Conditions

Equipment Name	Location	Pressure				Temperature - °F			
		Maximum Design	Minimum Design	Max Operating	Normal Operating	Maximum Design	Minimum Design	Max Operating	Normal Operating
FEP – A/B Reboiler	Shell Side	50 psig	Full Vacuum	0 psig	14.4 psia/ 1.6 psia	275 °F	49 °F	250 °F	220.8 °F/ 118.2 °F
FEP – A/B Reboiler	Tube Side	50 psig	Full Vacuum	0 psig	1.3 psia	175 °F	49 °F	150 °F	120.7 °F/ 110.6 °F
FEP – A/B Separator	N/A	50 psig	Full Vacuum	0 psig	1.11 psia	175 °F	49 °F	150 F°	120.7 °F/ 105.1 °F
FEP- A/B Primary Condenser	Shell Side	50 psig	Full Vacuum	0 psig	0.93/1.11 psia	175 °F	49 °F	150 °F	105.1 °F/ 99.4 °F
FEP Primary Condenser	Tube Side	100 psig	Full Vacuum	45 psig	22.4/45 psig	175 °F	49 °F	150 °F	93 °F/ 75°F
TLP Reboiler	Shell Side	50 psig	Full Vacuum	16.9 psia	16.9 psia/ 1.6 psia	275 °F	49 °F	250 °F	229 °F/ 118 °F
TLP Reboiler	Tube Side	50 psig	Full Vacuum	0 psig	1.3 psia	175 °F	49 °F	150 °F	126.6 °F/ 110.6 °F
TLP Separator	N/A	50 psig	Full Vacuum	0 psig	1.11 psia	175 °F	49 °F	150 °F	126.6 °F/ 105.1 °F
TLP Primary Condenser	Shell Side	50 psig	Full Vacuum	0 psig	0.93/1.11 psia	175 °F	49 °F	150 °F	105.1 °F/ 99.3 °F
TLP Primary Condenser	Tube Side	100 psig	Full Vacuum	45 psig	22.4/45 psig	175 °F	49 °F	150 °F	92.9 °F/ 75 °F

NOTE: The vacuum system parameters for TLP and FEP systems are presented in Table 2-6, these data in the following Table are from Reference 10

Table 2-6: HEP- 2 Vessels Design and Operating Conditions

NOTE: These data in the following Table are from References 10 and 11

Equipment Name	Location	Pressure				Temperature			
		Maximum Design	Minimum Design	Max Operating[3]	Normal Operating	Maximum Design	Minimum Design	Max Operating	Normal Operating
CNP Reboiler	Shell Side	50 psig	Full Vacuum	0 psig	13.04 psia/ 3.55 psia	275 ^{0}F	40 ^{0}F	250 ^{0}F	206 ^{0}F/ 148 ^{0}F
CNP Reboiler	Tube Side	50 psig	Full Vacuum	0 psig	1.45 psia	230 ^{0}F	40 ^{0}F	150 ^{0}F	134.7 ^{0}F/ 130 ^{0}F
CNP Separator	N/A	50 psig	Full Vacuum	0 psig	1.38 psia	230 ^{0}F	40 ^{0}F	150 ^{0}F	134.7 ^{0}F/ 112.6 ^{0}F
CNP Distillation Column	N/A	50 psig	Full Vacuum	0 psig	1.08 psia/ 1.38 psia	230 ^{0}F	40 ^{0}F	150 ^{0}F	112.6 ^{0}F/ 94.4 ^{0}F
CNP Primary Condenser	Shell Side	50 psig	Full Vacuum	0 psig	1.11 psia/ 0.99 psia	240 ^{0}F	40 ^{0}F	150 ^{0}F	105.2 ^{0}F/ 94. ^{0}F
CNP Primary Condenser	Tube Side	100 psig	Full Vacuum	45 psig	34.6/45 psig	240 ^{0}F	40 ^{0}F	150 ^{0}F	93 ^{0}F/ 75^0 F
TLP/FEP/CNP Inter Condenser*	Shell Side	50 psig	Full Vacuum	0 psig	3.7/3.9 psia	378 ^{0}F	40 ^{0}F	226 ^{0}F	Inlet 226 ^{0}F, Outlet 90 ^{0}F
TLP/FEP/CNP Inter Condenser*	Tube Side	100 psig	Full Vacuum	45 psig	43.8/45 psig	150 ^{0}F	40 ^{0}F	101 ^{0}F	Inlet 75 ^{0}F, Outlet 88.4 ^{0}F
TLP/FEP/CNP After Condenser*	Shell Side	50 psig	Full Vacuum	15.7 psia	15.2/15.7 psia	378 ^{0}F	40 ^{0}F	249 ^{0}F	Inlet 249 ^{0}F, Outlet 120 ^{0}F
TLP/FEP/CNP After Condenser*	Tube Side	100 psig	Full Vacuum	45 psig	44.2/45 psia	150 ^{0}F	40 ^{0}F	101 ^{0}F	Inlet 75 ^{0}F, Outlet 101 ^{0}F

* These data are from the correspondence with Buyer and the vacuum system vendor. They will be incorporated in Ref. 11 in the next revision.

[3] Max operating pressures do not include the effects of static column heads. See Table 2-10.

Table 2-7: Typical Load Cases to be Analyzed

Load No.	Pressure	Temp.	Origin of Stress	Type of Stress	Classification	Code Paragraph	Allowable
1	Full Vacuum (Minimum NOP)	70°	**Design Condition 1** • -14.7 psig + DW + Pipe Loads (DW + Thermal + Seismic) • Combine stresses from above with seismic stresses from Case # 6	General Membrane	P_m	4-131 4-138	S
				Primary Local Membrane	P_L	4-132 4-138	1.5S
2	50 psig	70°	**Design Condition 2** Design Pressure 50 psig + DW + Pipe Loads (DW + Thermal)	General Membrane	P_m	4-131 4-138	S
				Primary Local Membrane	P_L	4-132 4-138	1.5S
3	2.94 psig (Max NOP)	70°	**Design Condition 3** • 2.94 psig + DW + Pipe Loads (DW + Thermal + Seismic) • Combine stresses from above with seismic stresses from Case # 6	General Membrane	P_m	4-131 4-138	1.2S
				Primary Local Membrane	P_L	4-132 4-138	1.8S
4	No Pressure	70°	Vessel DW + Nozzle DW	**Range of Primary + Secondary Stress Intensity** Derive the largest range of stress intensity among these events.	$P_L + P_b + Q$	4-134 4-138	3S
5	Develop several load cases to envelop maximum and minimum combinations of normal operating pressures, DW, temperatures, normal and accident condition ambient temperatures, and nozzle loads and perform stress analysis.						
6	0	70^0F	Vessel Seismic Loads from Spectrum Analysis	Derive the stresses due to the vessel seismic loads from the spectrum analysis.	N/A	N/A	N/A
7	Vessel Pressure + DW + Thermal + All Seismic Loads			Combine stresses from load steps 5 and 6 and derive the total range of stress intensity which includes the seismic loads, but excludes the accident condition ambient temperature loads.	$P_L + P_b + Q$	4-134 4-138	3S

DRAFT

8	N/A	N/A	Select the two loading combinations that were used in Load Case # 5, and remove all pressure loads and nozzle seismic loads. Re-perform the analysis. Use the results and multiply them by appropriate Stress Multipliers (SM).	**Primary + Secondary + Peak** (Linear + Peak)	$P_L + P_b + Q + F$	4-135	Sa (97 or 106 ksi)

DRAFT

Table 2-8: Div. 1 Nozzle Neck Analysis Using Tolerances for Plate Material

Nozzle N02 - Reboiler Nozzle Stresses

Nozzle ID No.:			Under Tolerance	CA	Effective Thickness to be Used	Nozzle Outside Diameter	Nozzle Outside Radius	Nozzle Inside Radius
N02	Plate Nominal Thickness	0.750	0.01	0.04	0.700	24.00	12.000	11.290

NOTE: Use 0.01 inch under tolerance for the plate products (SA240). (Note 1)

Nozzle Geometry		in	in		in	in^2	in^3	in	Design
		Ro	Ri		Thick	Area	Modulus	M_ Arm	Pressure -ksi
		12.000	11.290		0.700	51.949	293.798	6.000	0.050
					(Note 2)	(Note 3)			

No	Loading Condition	Loading Condition	Axial Load	Vertical Load	Lateral Load	Resultant Shear Load	Torsion			Resultant Moment	Hoop Stress	Axial Membrane Stress	Axial Bending Stress	Total Axial Stress
			Fx	Fy	Fz	Fyz	Mx	My	Mz	Myz				
			Lbs	Lbs	Lbs	lbs	ft-lbs	ft-lbs	ft-lbs	ft-lbs	ksi	ksi	ksi	ksi
N02	DW + Thermal + Seismic	Pm + Pb	10475	6310	24601	25397	N/A	68016	29728	86787	0.806	0.605	3.545	4.150
							(Note 6)				(Note 4)	(Note 5)		

Note 1: Nozzle Inside Radius includes the corrosion allowance only; undertolerance is not applied.
Note 2: The minimum thickness value incorporates the corrosion allowance and the undertolerance.
Note 3: The calculated Area and Section Modulus are based on the corroded thickness; the undertolerance is not applied.
Note 4: Pressure stress terms are based on the minimum thickness including the undertolerance and the corrosion allowance.
Note 5: Stresses due to pipe loads are based on the calculated area and section modulus which do not include the undertolerance, but do include the corrosion allowance.
Note 6: This example does not include calculation of shear stresses; therefore torsional loads are not applicable.

Table 2-9: Div. 1 Nozzle Neck Analysis Using Tolerances for Piping Material

Nozzle N13 - Separator Vessel Nozzle Stresses

Nozzle ID No.:			Under Tolerance	CA	Effective Thickness to be Used	Nozzle Outside Diameter	Nozzle Outside Radius	Nozzle Inside Radius
N13	Nozzle Nominal Thckness:	0.337	12.50%	0.04	0.255	4.500	2.250	1.953

NOTE: Use 12.5% undertolerance for all pipe products. (Note 1)

Nozzle Geometry		in	in		in	in^2	in^3	in	Design
		Ro	Ri		Thick	Area	Modulus	M_Arm	Pressure -ksi
		2.250	1.953		0.255	3.922	3.868	0.000	0.050
					(Note 2)	(Note 3)			

No	Loading Condition	Loading Condition	Axial Load	Vertical Load	Lateral Load	Resultant Shear Load	Torsion			Resultant Moment	Hoop Stress	Axial Membrane Stress	Axial Bending Stress	Total Axial Stress
			Fx	Fy	Fz	Fyz	Mx	My	Mz	Myz				
			Lbs	Lbs	Lbs	lbs	ft-lbs	ft-lbs	ft-lbs	ft-lbs	ksi	ksi	ksi	ksi
N13	DW + Thermal + Seismic	Pm + Pb	1962	-916	1239	1541	N/A	-4441	-5028	6708	0.383	0.692	20.813	21.505
						(Note 6)					(Note 4)	(Note 5)		

Note 1: Nozzle Inside Radius includes the corrosion allowance only; undertolerance is not applied.
Note 2: The minimum thickness value incorporates the corrosion allowance and the undertolerance.
Note 3: The calculated Area and Section Modulus are based on the corroded thickness; the undertolerance is not applied.
Note 4: Pressure stress terms are based on the minimum thickness including the undertolerance and the corrosion allowance.
Note 5: Stresses due to pipe loads are based on the calculated area and section modulus which do not include the undertolerance, but do include the corrosion allowance.
Note 6: This example does not include calculation of shear stresses; therefore torsional loads are not applicable.

Table 2-10: Density and Static Head

Location	TLP	FEP A/B	CNP
	(Elevation –Feet)	(Elevation –Feet)	(Elevation –Feet)
Separator Outlet Nozzle	21.26	21.26	29.92
Pump Inlet	11.00	11.00	8.50
Reboiler Inlet	5.33	5.33	4.33
	Static Head (Feet)	**Static Head (Feet)**	**Static Head (Feet)**
Static Head at Separator Outlet (min)	9.24	9.24	5.58
Static Head at Separator Outlet (max)	11.74	11.74	8.08
Static Head at Pump Inlet (min)	19.50	19.50	27.00
Static Head at Pump Outlet (max)	22.00	22.00	29.50
Static Head at Reboiler Inlet (min)	25.17	25.17	31.17
Static Head at Reboiler Inlet (max)	27.67	27.67	33.67
	Specific Gravity	**Specific Gravity**	**Specific Gravity**
Minimum	0.994	0.994	1.23
Maximum	1.57	1.50	1.37

DRAFT

NOTES:
1. The elevations data in this Table are taken from drawings listed in Reference 38.
2. Static pressures in the vessels will be calculated considering the minimum and maximum fluid densities and elevations in the vessels.
3. The above data are for information only. The above Table will not be revised to reflect the latest Equipment specifications.

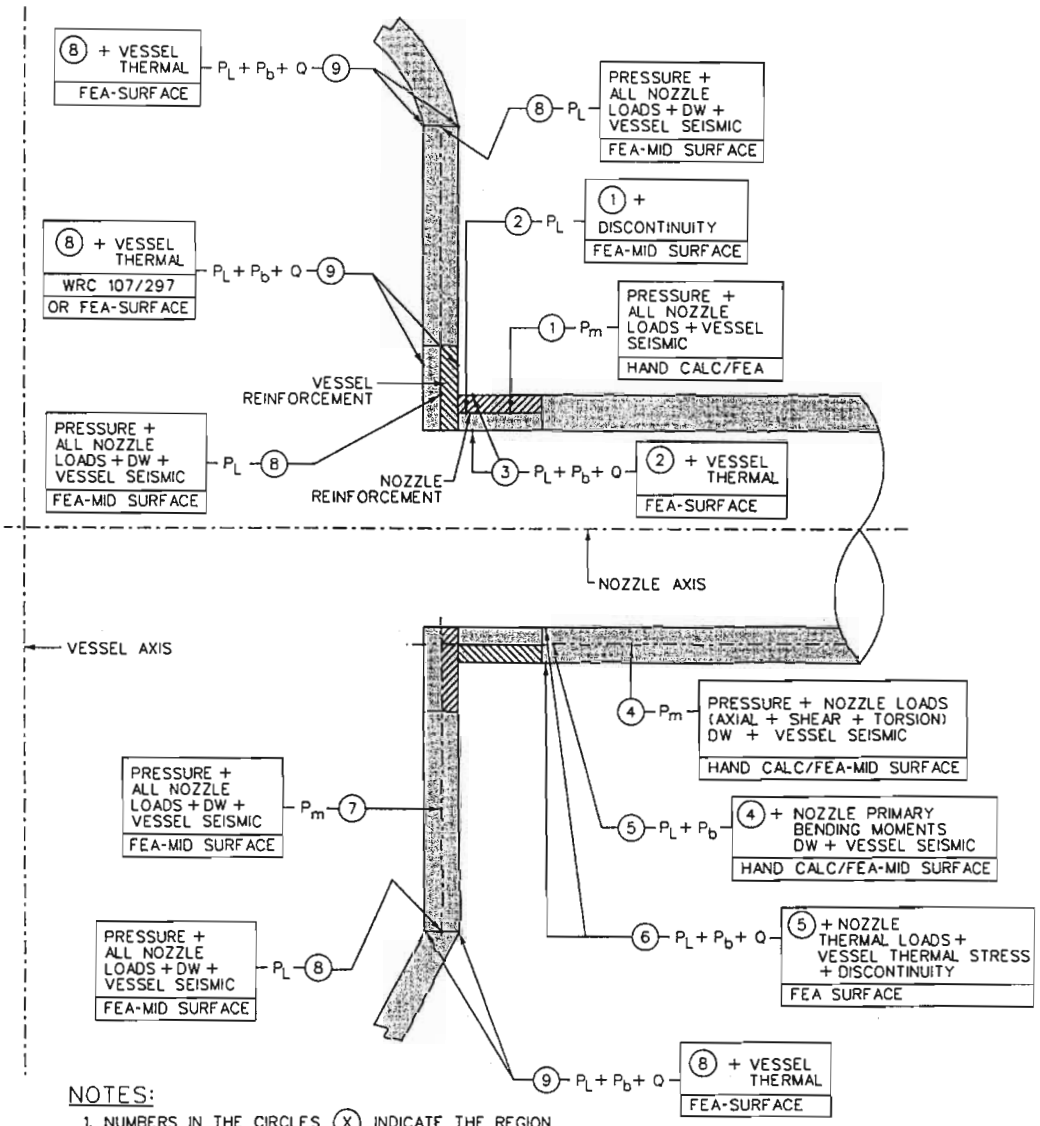

NOTES:

1. NUMBERS IN THE CIRCLES (X) INDICATE THE REGION NUMBERS IN TABLE 2-1 THROUGH 2-3.
2. THE ARROWS SHOW GENERAL LOCATIONS IN A TYPICAL VESSEL. FEA RESULTS WILL BE USED TO IDENTIFY MORE ACCURATE LOCATIONS.
3. EXCEPT FOR THE NOZZLE REINFORCEMENT REGIONS, NOZZLE THERMAL LOADS MAY BE EXCLUDED FROM REGIONS 7 AND 8 FOR P_m AND P_L EVALUATION.

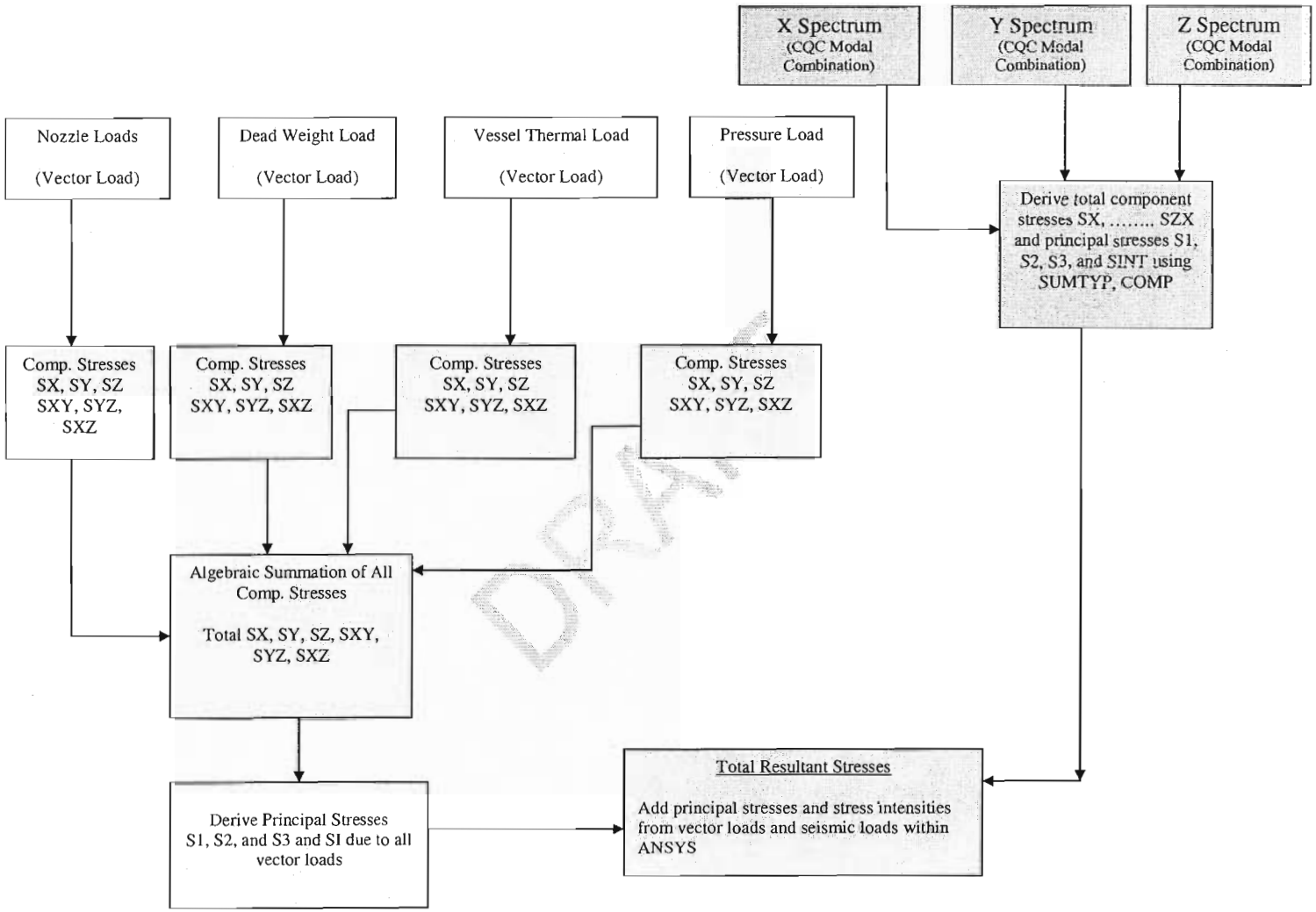

Figure 2-1: Vector Load Stresses Combination with Seismic Load Stresses

3.0 SKID ANALYSIS METHODOLOGY

The following criteria and codes apply to vessel skid analyses.

3.1 Applicable Codes

ANSI/AISC N690-1994 [14], is the "Specification for the Design, Fabrication, and Erection of Steel Safety-Related Structures for Nuclear Facilities." Buyer SDC 24590-WTP-DC-ST-01-001 [20] lists specific tailoring for N690 for use at WTP. The revised stress limit coefficient for compression in Table Q1.5.7.1 of N690 for load combinations 1 & 2 is 1.0 instead of 1.5; and for load combinations 8 & 9 it is 1.4 instead of 1.6.

GTSTRUDL does not perform code checks in accordance with AISC N690 [14]. However, it will perform a code check in accordance with the AISC ASD (Allowable Stress Design), 9th edition [15]. The AISC ASD is identical to AISC N690 for the purposes of these evaluations with one exception. Section Q1.5.9.1 of N690 provides allowable stresses for compression of axially loaded stainless steel members. These allowable stresses are less than those allowed by the ASD 9th edition. Therefore, the GTSTRUDL AISC ASD [16] code check along with a hand check of the members with the highest interaction ratios associated with axial compression is performed to qualify the members. Also, GTSTRUDL will perform an NF17 [31] code check. This feature is exercised to capture the code evaluation for shear stresses. The "SHEAR" provision within NF17 combines the transverse shear stresses along the Y and Z axis, torsional shear stress and the warping shear stresses. The complete procedure is explained in Reference [31], pages 2.2.5-509 through 2.2.5-565.

Seller will compare the fabricated skid girders to the existing AISC members substituted in the analysis, to see if the AISC members will provide conservative results. If this determination cannot be made, Seller will use the calculated properties to perform the AISC N690 Code Check.

In addition to the foregoing, the governing codes that are intended to be used as the basis of evaluation for the following structural components are as follows.

3.1.1 Anchor bolts: For anchor bolts, ACI 349 [34]; for remote fasteners, N690
3.1.2 Carbon steel A992 material: For Seismic Category I or II, N690; for Seismic Category III, AISC, ASD 9th Edition
3.1.3 Stainless Steel Plate SA240 and structural steel shapes ASTM MT304 A554 304SS: For Seismic Category I or II, N690
3.1.4 Reinforced concrete pad at skid base is not within the scope of this document.

3.2 Applicable References for Inputs

Buyer Document No. 24590-PTF-3PS-MEVV-T0001, Revision 2, "Engineering Specification for Forced Circulation Vacuum Evaporator System." (Seller Doc. ID 08-5032211 [17]).

Buyer Document No. 24590-PTF-3PS-MEVV-T0002, Revision 4, "Engineering Specification for Cesium Nitric Acid Forced Circulation Vacuum Evaporator System." (Seller Doc. ID 08-5037418 [18]).

Buyer Document No. 24590-WTP-3PS-SS90-T0001, Revision 1, "Engineering Specification for Seismic Qualification of Seismic Category I/II Equipment and Tanks". (Seller Doc. ID 08-5032273 [19]).

Buyer Document No. 24590-WTP-DC-ST-01-001, Revision 11. "Structural Design Criteria." (Seller Doc. ID 08-5036323 [20]).

3.3 Material

Material designations are obtained from the drawings for the part being analyzed and are therefore calculation specific. Material properties are obtained from the ASME B&PV Code, Section II, Part D [7]. Seller is considering that the 304 SS material is dual certified per drawings designation. The drawings call for dual certified material and vendor certification shall confirm that the vendor has complied with the dual certification material requirements. Therefore, allowable stresses for 304 SS material will be used in the analyses.

Seller will reference the corresponding sections in the ANSYS vessel report that document these material properties. In addition, the material properties and thermal expansion coefficients used by ANSYS and GSTRUDL will be consistent.

3.4 Ambient Temperature From Contract Documents

Room ambient design temperature variations are defined in Table 2-4. The reference temperature from which the differential thermal stress will be evaluated is 70 deg. F. The coefficients of thermal expansion will be documented in the analysis. The relative expansion or contraction between the skid members and the concrete for skids attached to the concrete will be considered. The same thermal load methodology/properties will be applied to both the ANSYS and the GTSTRUDL models. The thermal loads and load combinations with the operating temperature, To and the abnormal temperature, Ta will be used for the N690 [14] evaluations. The load combinations according to N690 are given in Section 3.7 herein.

3.5 Seismic Accelerations

Seismic Accelerations for HEP 1 SC I/II Equipment and Tanks

Seismic accelerations are obtained from the In-Structure Response Spectra contained in Appendix V, Attachment 1 of Buyer Document No. 24590-PTF-3PS-MEVV-T0001, Revision 2 [17]. The appropriate ISRS Figures are enveloped for 4% damping and are used as input in the ANSYS and GTSTRUDL coupled models. The 4% damping is based on Buyer Specification in Ref. 19 for Response Level 2 and considering vessels and frame/skid assemblies as "all other equipment". Refer to Table 3-1 for response spectra to be used for HEP1.

Seismic Accelerations for HEP 2 SC I/II Equipment and Tanks

Seismic accelerations are obtained from the In-Structure Response Spectra contained in Appendix J, Attachment 1 of Buyer Document No. 24590-PTF-3PS-MEVV-T0002, Revision 4 [18]. The appropriate ISRS Figures are enveloped for 4% damping and are used as input in the GTSTRUDL models. Refer to Table 3-2 for response spectra to be used for HEP2.

The same ISRS figures will be used for both the ANSYS FEA analyses and GTSTRUDL skid analyses.

3.6 Methodology

The methodology of the various analyses being performed is presented in Figure 1-3. ANSYS finite element models have been developed and exercised for the separator vessels and their supporting frames, the reboilers and their supporting frames, the recirculation pumps and their supporting frames, the primary condensers and their supporting frames and the distillation column and its support frame. These models have been analyzed for deadweight, pressure, thermal and vessel and frame seismic inertia loads. The seismic analysis that was performed is a response spectra dynamic analysis. The support frames were included so that the dynamic interaction between the vessels and their supporting structure would be accounted for in the analyses. In addition, the recirculation piping nozzle loads from the GTSTRUDL coupled analysis were included in this finite element analysis along with other large bore piping nozzles (4" diameter and larger). The purpose of the ANSYS analysis is to evaluate the vessels, not to evaluate the frame. In addition, the ANSYS models are used to develop the recirculation piping nozzle stiffnesses at the vessel shell/nozzle intersection and the vessel support reaction loads. These results are used in the recirculation piping analyses and the GTSTRUDL skid analyses respectively.

The purpose of the GTSTRUDL analyses is to evaluate the support frames, not the vessels. The reason for using GTSTRUDL to evaluate the frames is because GTSTRUDL will perform AISC [15] and NF 17 [31] Code check evaluations of the members. ANSYS does not have this capability.

The structural base support platforms (i.e., the sole plates) for the reboilers and recirculation pumps are modeled in the ANSYS FEA analysis. In as much as the sole plates are in the ANSYS models, their effect is in the flexibility matrices that are used in the GTSTRUDL coupled models, even though they are not explicitly included in the GTSTRUDL models. It should be noted that the boundary conditions for the GTSTRUDL analyses are the top of the sole plates. Buyer is to provide a rigid support structure (greater than 33 Hz) between the concrete floor embedments and the bottom of the soleplates of the reboiler vessel and recirculation pump support frames per contract requirements.

Seller will show that the GTSTRUDL AISC N690 Code Evaluation results are bounding when compared to the Separator ANSYS Code Evaluation results. The type of member specified in the GTSTRUDL models and the ANSYS models will be consistent. The lateral stiffening members (braces) in the GTSTRUDL Model are presently truss members while the lateral stiffening members in the ANSYS Model are presently frame members. The lateral stiffening members in the GTSTRUDL Model will be replaced with frame members for consistency. All members will not be compared but rather a number of members will be compared that fairly represent the loaded state of the skid. These members will be the most highly loaded column, the most highly loaded diagonal brace, the most highly loaded horizontal member at the base and the most highly loaded horizontal member at the top of the frame. Welds are not included in this comparison because the object is solely verification of member margins. For the comparison, any pipe loads that would normally be included in the GTSTRUDL Model will be included even though the pipe loads are normally excluded from the ANSYS Model. The object of the comparison is to show that the code evaluation of the as analyzed GTSTRUDL model bounds the code evaluation of the as analyzed ANSYS model.

The GTSTRUDL frame models that are used to qualify the frame members per the AISC N690 Code have been isolated from the coupled models for the TLP, FEP and CNP Systems. Therefore, both GTSTRUDL analyses use identical frame models.

Seller will compare the fabricated skid girders to the existing AISC members used in the analysis, to see if the AISC members will provide conservative results. If this determination cannot be made, Seller will use the calculated properties to perform the analyses. The corresponding properties used in ANSYS will be consistent with the GTSTRUDL models.

Also, for the Separator Vessel Skid, in as much as one of the skid girders being discussed here forms the base of the skid, and not only is the interior box formed by the girders filled with grout, but the area around the outside of the girders is also filled with grout, the boundary conditions that have been used previously will be changed. The GTSTRUDL model will be stopped at the top of the girders instead of the bottom of the girders. A detailed hand analysis will be performed on the girders that are essentially embedded in grout by using the support reaction loadings from the GTSTRUDL model.

The loads that the vessels apply to the frames are extracted from the ANSYS models and statically applied to the GTSTRUDL frame models. These are the deadweight, thermal and seismic loads that have been determined from seismic response spectra dynamic analyses. In addition, the applied loads to the frames that result from the nozzle loads are statically applied to the frame. Finally, if an integral pipe support has been added to the frame, the loads reacted by the support have been extracted from the coupled model and applied to the vessel frames.

Not included in the foregoing are the body forces on the frame members as a result of deadweight and seismic inertia loads. The deadweight forces are accounted for by invoking the applicable GTSTRUDL command. The seismic forces are accounted for by performing a seismic response spectra dynamic analysis on the frame. For the seismic analysis, each spectrum is applied separately for the three global directions and the responses of the individual modes in each earthquake direction are combined using the CQC method. The body mass is also computed and added to each combined response. The total seismic response is computed by combining the response from both horizontal and vertical analyses by the SRSS method. This is a conservative evaluation since the ANSYS analysis already includes a portion of these deadweight and seismic loads.

The loadings described above are combined as stipulated and the frame is evaluated for acceptance to the AISC N690 Code requirements. The deadweight (which includes nozzle deadweight and thermal loads) and seismic loads resulting from applying the lug loads from the ANSYS analysis are added to the deadweight and seismic loads resulting from the evaluation for body forces. For the deadweight loads, algebraic summation is used, while for seismic loads, absolute summation is used. Also, the frame member welded end connections are evaluated herein. Weld evaluations will be performed according to AISC N690 Section Q1.5.3 and CQ1.5.3. The weld forces may be determined in accordance with Table 5 of Blodgett, "Design of Welded Structures" [39].

Seller will provide both ANSYS and GTSTRUDL reactions for individual loads and load combinations for Buyer to use as appropriate. The GTSTRUDL model has the same vessel loads as the ANSYS model. In addition, GTSTRUDL includes piping loads when a pipe support is required on the frame/skid per Buyer isometrics, for the recirculation piping qualification. For the Sole Plate Analysis using ANSYS, Seller will include the pipe support interfacing loads. Note that the ANSYS model was generated to seismically qualify the vessel. Therefore, piping loads acting on the skid will not be included in the ANSYS analysis. The seismic qualification of the frame/skid is performed in the GTSTRUDL analysis. The loads for pipe supports that are attached to and integral to the skids are taken from the coupled analysis. Therefore, there is no coupling issue to be resolved based on ASCE 4-98, Section 3.1.7 [30].

Seller will summarize individual loads as well as load combinations, and SAM/TAM for all vessel nozzles and Grayloc connector load results, in tabular form, per Buyer Specification 24590-WTP-3PS-SS90-T0001, Sections 7.2 and 7.4 [19]. Seller will ensure that each analysis defines the slenderness ratio (Kl/r) and the rationale for its value.

The skids are modeled using the GTSTRUDL computer code, Version 28NT, running on a Dell computer with a Windows XP operating System. Within GTSTRUDL, the structural response of all components not integral to the pressure boundary are output as normal and shear stress (not stress intensities). These stress components are compatible with evaluations using the AISC N690 criteria. The vessels are modeled as a series of massless, rigid elements along their vertical center line. Massless rigid elements are also used to connect the vessel centerline to the support frame. The vessel portion of the GTSTRUDL model is not meant for evaluation of the vessel, but is

included to prevent the vessel attachment support lug locations on the frame from moving independently of each other.

The following defines what is meant by "Frame/Skid" herein:

Separator Frame/Skid: The Separator Frame/Skid consists of the following elements: support frame, two pipe supports, vessel represented by weightless rigid elements, bottom girders attached to embedment plates.

Reboiler Frame/Skid: The Reboiler Frame/Skid consists of the following elements: support frame, one pipe support, vessel represented by weightless rigid elements, base plates, shear pins and hold down bolts.

Recirculation Pump Frame/Skid: The Recirculation Pump Frame/Skid consists of the following elements: support frame, pump represented by weightless rigid elements, base plates, shear pins and hold down bolts.

Distillation Column Frame/Skid: The Distillation Column Frame/Skid consists of the following elements: support frame, vessel represented by weightless rigid elements, base plates attached to the concrete floor with post-installed concrete anchor bolts.

Primary Condenser Frame/Skid: The Primary Condenser Frame/Skid consists of the following elements: support frame, primary condenser represented by weightless rigid elements, Intercondenser and Aftercondenser represented by rigid elements that reflect their proper weight and cg, bottom girders attached to the concrete floor with cast-in-place anchor bolts.

3.7 Loads and Load Combinations

Buyer SDC 24590-WTP-DC-ST-01-001 [20] lists specific tailoring of N690 [14] for use at WTP. The revised stress limit coefficient (SLC) for compression in Table Q1.5.7.1 of N690 for load combinations 1 & 2 is 1.0 instead of 1.5; and for load combinations 8 & 9a is 1.4 instead of 1.6 for compression and shear. The stress limit for weld base metal shear is 1.4.

1. Loads

D – Deadweight of vessel and frame/skid.

T_0 – Thermal vessel and frame/skid loads during normal operating conditions.

Ta – Thermal vessel and frame/skid loads generated by postulated accident conditions.

Es – SSE inertia loads of vessel and frame/skid including nozzle seismic loads (Ro) when applicable.

L – Live loads if applicable.

R_0 – Operating piping reaction loads including nozzle deadweight and thermal loads.

Pa – Maximum differential pressure load generated by postulated accident conditions. For this project, Pa = 0.

2. Load Combinations

Normal Load Case 1: D + L; Stress Limit Coefficient, SLC =1.0

Normal Load Case 2: $D + L + R_0 + T_0$; Stress Limit Coefficient, SLC =1.0

Extreme Load Case 8: $D + L + R_0 + T_0 + Es$; SLC =1.4 for compression and shear, 1.6 for tension

Abnormal Load Case 9a: $D + L + Ta + Pa$; SLC = 1.4 for compression and shear, 1.6 for tension.

DRAFT

Table 3-1: HEP1 – Applicable Figure Numbers for Spectra

GTSTRUDL Analyses (HEP 1)						
Component	**Figures (E-W)**	**Elev.**	**Figures (N-S)**	**Elev.**	**Figures (Vertical)**	**Elev.**
Loop Coupled Analysis	37, 67, 21E	Enveloped (0' - 54')	38, 68, 22E	Enveloped (0' - 54')	24E	0'
TLP Separator Skid	37, 67	Enveloped (0' - 54')	38, 68	Enveloped (0' - 54')	24E	0'
FEP A/B Sep Skids	37, 67	Enveloped (0' - 54')	38, 68	Enveloped (0' - 54')	24E	0'
Recirc. Pumps Skids	21E	0'	22E	0'	24E	0'
Reboilers Skids	21E	0'	22E	0'	24E	0'
Primary Condenser Skid (TLP) *	37, 40	Enveloped (54')	38, 41	Enveloped (54')	115	56'
Primary Condensers Skids (FEP) *	37	54'	38	54'	121	56'

* Since FEP & TLP Condenser skids are qualified in one analysis, envelope of figures 37, 38, 40, 41, and 115, 121 values will be used.

ANSYS FEA Analyses (HEP 1)						
Component	**Figures (E-W)**	**Elev.**	**Figures (N-S)**	**Elev.**	**Figures (Vertical)**	**Elev.**
TLP Separator	37, 67	Enveloped (0' - 54')	38, 68	Enveloped (0' - 54')	24E	0'
FEP A/B Separators	37, 67	Enveloped (0' - 54')	38, 68	Enveloped (0' - 54')	24E	0'
Recirc. Pumps	21E	0'	22E	0'	24E	0'
Reboilers	21E	0'	22E	0'	24E	0'
Primary Condensers TLP*	37, 40	Enveloped (54')	38, 41	Enveloped (54')	115	56'
Primary Condenser FEP*	37	54'	38	54'	121	56'

Table 3-2: HEP2 – Applicable Figure Numbers for Spectra

GTSTRUDL Analyses (CNP)						
Component	**Figures (E-W)**	**Elev.**	**Figures (N-S)**	**Elev.**	**Figures (Vertical)**	**Elev.**
Loop Coupled Analysis	37, 49, 67	Enveloped (0', 27', 54')	38, 50, 68	Enveloped (0', 27', 54')	51, 69, 114	Enveloped (0', 27', 54', 56')
Separator Skid	37, 49	Enveloped (27', 54')	38, 50	Enveloped (27', 54')	51, 114	Enveloped (27', 54', 56')
Recirc. Pump Skid	67	0'	68	0'	69	0'
Reboiler Skid	67	0'	68	0'	69	0'
Primary Condenser Skid	16, 22	Enveloped (76')	17, 23	Enveloped (76')	144	77'
Distillation Column	37	54'	38	54'	114	56'

ANSYS FEA Analyses (CNP)						
Component	**Figures (E-W)**	**Elev.**	**Figures (N-S)**	**Elev.**	**Figures (Vertical)**	**Elev.**
Separator	37, 49	Enveloped (27', 54')	38, 50	Enveloped (27', 54')	51, 114	Enveloped (27', 54', 56')
Recirc. Pump	67	0'	68	0'	69	0'
Reboiler	67	0'	68	0	69	0'
Primary Condenser	16, 22	Enveloped (76')	17, 23	Enveloped (76')	144	77'
Distillation Column	37	54'	38	54'	114	56'

4.0 PIPING ANALYSIS DATA AND METHODOLOGY

Tables 4-1 through 4-8 present the major design input data, major references, and piping analysis methodology for HEP 1 and HEP 2 piping systems included in the Seller scope for seismic qualification and/or supply. Piping systems shall be analyzed using the same ISRS curves as the parent vessel/equipment. The justification for decoupling of the off-gas piping, or any other piping system from their respective vessels, will be documented in the piping analyses per the requirements of ASCE 4-98 criteria. Justification for use of 4% damping will be documented.

Piping and elbows material designations listed below are obtained from the applicable drawings. Material properties are obtained from the ASME B& PV Code, Section II, Part D [7].

Piping: A312 TP304/304L
Elbows: A403 WP304/304L

Seller is considering that the piping material is dual certified per isometric drawings designation. The drawings call for dual certified material and vendor certification shall confirm that the vendor has complied with the dual certification material requirements. Therefore, allowable stresses for TP304 material will be used in all piping analyses.

Seller will apply the inelastic energy absorption coefficient (Fμ) of 1.5, per Section 4.5.2.b of the Pipe Stress Criteria Document No. 24590-WTP-DC-PS-01-001, Rev. 5 [21] in following manner:

1. To the seismic nozzle loads from the coupled GTSTRUDL analysis before applying those loads to the ANSYS FEA models
2. When reporting seismic pipe support loads for use by Buyer, Seller will report the unmodified seismic loads (no Fμ applied) and then report the loads divided by 1.5. This will allow Buyer to choose the correct load, depending on the mode of failure, and to report the correct loads to CS&A.
3. In addition, Seller will apply the inelastic energy absorption coefficient (Fμ) of 1.5 to all SC-I and SC-II piping analyses performed by Seller.
4. Seller will not apply Fμ to pipe supports they are designing, since these are attached directly to the vessel frames.

Seller will comply with the limitations set forth in Section 4.5.2b of the Pipe Stress Criteria Document No. 24590-WTP-DC-PS-01-001, Rev. 5 [21]. Specifically, Fμ shall remain equal to 1.0 for the following:

1. Calculating piping displacements
2. Calculating loads and or accelerations on active equipment
3. Calculating loads on components that exhibit non-ductile failure modes (buckling and expansion anchor pull out)
4. Calculating pipe support attachment interface loads to be used in the evaluation of CS&A components.

Table 4-1: FEP & TLP Off-Gas Piping Analysis

Component	Category	Reference
FEP & TLP Off-Gas Piping Analysis (32-5037397)	**Design Input** Layout, pipe size, pipe class, material, wall thickness & design pressure =50 psig. Corrosion allowance = 0.040" Maximum operating temp = 150ºF In-structure Response Spectra Percentage Damping Used 5%	Seller Dwg. 02-5030692D, Rev. 03, "FEP Off Gas Piping A" Seller Dwg. 02-5030693D, Rev. 03, "FEP Off Gas Piping B" Seller Dwg. 02-5030696D, Rev. 03, "TLP Off Gas Piping" Buyer Specification No. 24590-WTP-3PS-P000-T0001, Rev. 5, "Piping Material Classes General Description and Summary" (08-5032269) Seller Technical Document 51-5031985, "HEP #1 Equipment Design Conditions" Buyer Specification No. 24590-PTF-3PS-MEVV-T0001, Rev. 2, "Forced Circulation Vacuum Evaporator System" (08-5032211-02), (Appendix V, Attachment 1) Buyer Specification 24590-WTP-DC-PS-01-001, Rev. 5 [21]
	Methodology	Buyer Specification 24590-WTP-DC-PS-01-001, Rev. 5, "Pipe Stress Design Criteria including "Pipe Stress Criteria "and "Span Method Criteria" [21] (08-5036324-002) Alternate Pipe Stress Methodology 38-9039408-000 SDDR 62 (24590-WTP-SDDR-M-06-00434) Computer Program Used AutoPIPE Plus-Win/ 6.20.9
	Acceptance Criteria **Code**	ASME B31.3-1996, Process Piping

DRAFT

Table 4-2: CNP Off-Gas Piping Analysis

CNP Off-Gas Piping Analysis (32-9045976)	**Design Input**	
	Layout, pipe size, pipe class, material, wall thickness and insulation thickness	Seller Doc. 02-9049370-000, Buyer Dwg. 24590-PTF-P3-CNP-GU00001075, Rev. 0 Seller Doc. 08-5037418-004, Buyer Specification No. 24590-PTF-3PS-MEVV-T0002, Rev. 4 "Cesium Nitric Acid Recovery Forced Circulation Vacuum Evaporator System", (Appendix J, Attachment 3)
	In-structure Response Spectra	Same as above (Appendix J, Attachment 1)
	Insulation material and density	Seller Doc. 38-9049397-000, Buyer CCN 109338 Insulation Code and Density Seller Doc. 38-9049488-000, Buyer clarification of density use in CCN 109338
	Corrosion allowance = 0.040"	Buyer Specification No. 24590-WTP-3PS-P000-T0001, Rev. 5, "Piping Material Classes General Description and Summary" (08-5032269)
	Maximum operating temp = 150ºF Design pressure =50 psig.	Seller Doc. 51-5063365, "CNP Equipment Design Conditions"
	Percentage Damping Used 5%	See Buyer Specification 24590-WTP-DC-PS-01-001, Rev. 5 below
	Methodology	Buyer Specification 24590-WTP-DC-PS-01-001, Rev. 5, "Pipe Stress Design Criteria including "Pipe Stress Criteria "and "Span Method Criteria" (08-5036324-002) Alternate Pipe Stress Methodology and 38-9039410-000 SDDR 2-008 (24590-WTP-SDDR-M-06-00435) Computer Program Used AutoPIPE Plus-Win/ 6.20.9
	Acceptance Criteria Code	ASME B31.3-1996, Process Piping

DRAFT

Table 4-3: HEP1, FEP-A Recirculation Loop Piping System Coupled Evaluation

Component	Category	Reference
HEP1, FEP-A Recirculation Loop Piping System Evaluation (32-9048451)	**Design Input** Layout, pipe size, pipe class , material For max and min ambient temperatures, Refer to Table 2-4. In-Structure Response Spectra Corrosion allowance = 0.0937" Wall Thickness = 0.375" Design pressure =50 psig Maximum operating temp = 150ºF Percentage Damping Used 4% (1)	Buyer Specification No. 24590-PTF-3PS-MEVV-T0001, Rev. 2, "Forced Circulation Vacuum Evaporator System" (08-5032211), Appendix V, Attachment 3 Same as above (Appendix V, Attachment 1) Buyer Specification No. 24590-WTP-3PS-P000-T0001, Rev. 5, "Piping Material Classes General Description and Summary" (08-5032269) Seller Technical Document 51-5031985, "HEP #1 Equipment Design Conditions" See Buyer Specification 24590-WTP-DC-PS-01-001, Rev. 5 below, and Buyer Specification 24590-WTP-3PS-SS90-T0001, Rev. 1, "Engineering Specification for Seismic Qualification of Seismic Category I/II Equipment and Tanks" (08-5032273)
	Methodology	Buyer Specification 24590-WTP-DC-PS-01-001, Rev. 5, "Pipe Stress Design Criteria including "Pipe Stress Criteria "and "Span Method Criteria" (08-5036324-002) Buyer Document No. 24590-WTP-3PS-SS90-T0001, Revision 1, "Engineering Specification for Seismic Qualification of Seismic Category I/II Equipment and Tanks." (08-5032273) GTSTRUDL, Version 28NT
	Acceptance Criteria **Code**	ASME B31.3-1996, Process Piping

Notes: (1) As stated in Section 4.1.4 of Seller Calculation 32-9048451 [24], the damping value for piping is 5% and 4% for equipment skid structures. Therefore a conservative damping value for the coupled model (piping and skid) of 4% is used.

DRAFT

Table 4-4: HEP1, FEP-B Recirculation Loop Piping System Coupled Evaluation

Component	Category	Reference
HEP1, FEP-B Recirculation Loop Piping System Evaluation (32-9048174)	**Design Input** Layout, pipe size, pipe class, material For max and min ambient temperatures, Refer to Table 2-4.	Buyer Specification No. 24590-PTF-3PS-MEVV-T0001, Rev. 2, "Forced Circulation Vacuum Evaporator System" (08-5032211), Appendix V, Attachment 3
	In-structure Response Spectra	Same as above (Appendix V, Attachment 1)
	Corrosion allowance = 0.0937" Wall Thickness = 0.375"	Buyer Specification No. 24590-WTP-3PS-P000-T0001, Rev. 5, "Piping Material Classes General Description and Summary" (08-5032269)
	Design pressure =50 psig Maximum operating temp = 150ºF	Seller Technical Document 51-5031985, "HEP #1 Equipment Design Conditions"
	Percentage Damping Used 4% (1)	See Buyer Specification 24590-WTP-DC-PS-01-001, Rev. 5 below, and Buyer Specification 24590-WTP-3PS-SS90-T0001, Rev. 1, "Engineering Specification for Seismic Qualification of Seismic Category I/II Equipment and Tanks" (08-5032273)
	Methodology	Buyer Specification 24590-WTP-DC-PS-01-001, Rev. 5, "Pipe Stress Design Criteria including "Pipe Stress Criteria "and "Span Method Criteria" (08-5036324-002) Buyer Document No. 24590-WTP-3PS-SS90-T0001, Revision 1, "Engineering Specification for Seismic Qualification of Seismic Category I/II Equipment and Tanks." (08-5032273) including SCN # 24590-WTP-3PN-SS90-00001 & 00002 GTSTRUDL, Version 28NT
	Acceptance Criteria Code	ASME B31.3-1996, Process Piping

Notes: (1) As stated in Section 4.1.4 of Seller Calculation 32-9048174 [25], the damping value for piping is 5% and 4% for equipment skid structures. Therefore a conservative damping value for the coupled model (piping and skid) of 4% is used.

DRAFT

Table 4-5: HEP1, TLP Recirculation Loop Piping System Coupled Evaluation

Component	Category	Reference
HEP1, TLP Recirculation Loop Piping System Evaluation (32-9049002)	**Design Input** Layout, pipe size, pipe class, material For max and min ambient temperatures, Refer to Table 2-4. In-structure Response Spectra Corrosion allowance = 0.0937" Wall Thickness = 0.375" Design pressure =50 psig Maximum operating temp = 150ºF Percentage Damping Used 4% (1)	Buyer Specification No. 24590-PTF-3PS-MEVV-T0001, Rev. 2, "Forced Circulation Vacuum Evaporator System" (08-5032211), Appendix V, Attachment 3 Same as above (Appendix V, Attachment 1) Buyer Specification No. 24590-WTP-3PS-P000-T0001, Rev. 5, "Piping Material Classes General Description and Summary" (08-5032269) Seller Technical Document 51-5031985, "HEP #1 Equipment Design Conditions" See Buyer Specification 24590-WTP-DC-PS-01-001, Rev. 5 below, and Buyer Specification 24590-WTP-3PS-SS90-T0001, Rev. 1, "Engineering Specification for Seismic Qualification of Seismic Category I/II Equipment and Tanks" (08-5032273)
	Methodology	Buyer Specification 24590-WTP-DC-PS-01-001, Rev. 5, "Pipe Stress Design Criteria including "Pipe Stress Criteria "and "Span Method Criteria" (08-5036324-002) Buyer Document No. 24590-WTP-3PS-SS90-T0001, Revision 1, "Engineering Specification for Seismic Qualification of Seismic Category I/II Equipment and Tanks." (08-5032273) including SCN # 24590-WTP-3PN-SS90-00001 & 00002 GTSTRUDL, Version 28NT
	Acceptance Criteria Code	ASME B31.3-1996, Process Piping

Notes: (1) As stated in Section 4.1.4 of Seller Calculation 32-9049002 [26], the damping value for piping is 5% and 4% for equipment skid structures. Therefore a conservative damping value for the coupled model (piping and skid) of 4% is used.

DRAFT

Table 4-6: CNP Recirculation Loop Piping System Coupled Evaluation

Component	Category	Reference
CNP Recirculation System Loop Coupled Analysis (32-9045700)	**Design Input** Layout, pipe size, pipe class, material For max and min ambient temperatures, Refer to Table 2-4. In-structure Response Spectra Corrosion allowance = 0.040" Wall Thickness = 0.375" Design pressure =50 psig Maximum operating temp = 150ºF Percentage Damping Used 4% (1)	Seller Doc. 08-5037418-004, Buyer Specification No. 24590-PTF-3PS-MEVV-T0002, Rev. 4 "Cesium Nitric Acid Recovery Forced Circulation Vacuum Evaporator System", Appendix J, Attachment 3 Same as above (Appendix J, Attachment 1) Buyer Specification No. 24590-WTP-3PS-P000-T0001, Rev. 5, "Piping Material Classes General Description and Summary" (08-5032269) Seller Doc. 51-5063365, "CNP Equipment Design Conditions" See Buyer Specification 24590-WTP-DC-PS-01-001, Rev. 5 below, and Buyer Specification 24590-WTP-3PS-SS90-T0001, Rev. 1, "Engineering Specification for Seismic Qualification of Seismic Category I/II Equipment and Tanks" (08-5032273)
	Methodology	Buyer Specification 24590-WTP-DC-PS-01-001, Rev. 5, "Pipe Stress Design Criteria including "Pipe Stress Criteria "and "Span Method Criteria" (08-5036324-002) Buyer Document No. 24590-WTP-3PS-SS90-T0001, Revision 1, "Engineering Specification for Seismic Qualification of Seismic Category I/II Equipment and Tanks." (08-5032273) including SCN # 24590-WTP-3PN-SS90-00001/00002 GTSTRUDL, Version 28NT
	Acceptance Criteria **Code**	ASME B31.3-1996, Process Piping

Notes: (1) As stated in note to Table 4-1 of Seller Calculation 32-9045700 [27], the damping value for piping is 5% and 4% for equipment skid structures. Therefore a conservative damping value for the coupled model (piping and skid) of 4% is used.

DRAFT

This page is intentionally left blank

DRAFT

Table 4-7: HEP-1 FEP & TLP Vacuum Equipment Piping & Support Evaluation

Component	Category	Reference
HEP-1 FEP & TLP VACUUM EQUIPMENT PIPING & SUPPORT EVALUATION (32-5037399)	**Design Input** Layout, pipe size, pipe class, material and wall thickness	Seller Dwg. 02-5035018D, Rev. 05 and 02-5043567B, Rev. 06, "Isometric Detail of FEP Condenser FEP-COND-00001A Vacuum Equipment Piping" Seller Dwg. 02-5035019D, Rev. 05 and 02-5043849B, Rev. 06, "Isometric Detail of FEP Condenser FEP-COND-00001B Vacuum Equipment Piping" Seller Dwg. 02-5035020D, Rev. 05 and 02-5043850B, Rev. 06, "Isometric Detail of TLP Condenser TLP-COND-00001 Vacuum Equipment Piping"
	Corrosion allowance = 0.040"	Buyer Specification No. 24590-WTP-3PS-P000-T0001, Rev. 5, "Piping Material Classes General Description and Summary" (08-5032269)
	Design pressure =50 psig Maximum operating temp = 150ºF	Seller Technical Document 51-5031985, "HEP #1 Equipment Design Conditions"
	In-structure Response Spectra	Buyer Specification No. 24590-PTF-3PS-MEVV-T0001, Rev. 2, "Forced Circulation Vacuum Evaporator System" (08-5032211-02), (Appendix V, Attachment 1)
	Percentage Damping Used 5%	See Buyer Specification 24590-WTP-DC-PS-01-001, Rev. 5 below
	Methodology	Buyer Specification 24590-WTP-DC-PS-01-001, Rev. 5, "Pipe Stress Design Criteria including "Pipe Stress Criteria "and "Span Method Criteria" (08-5036324-002) Alternate Pipe Stress Methodology 38-9039408-000 SDDR 62 (24590-WTP-SDDR-M-06-00434) Computer Program Used AutoPIPE Plus-Win/ 6.20.9
	Acceptance Criteria **Code**	ASME B31.3-1996, Process Piping

DRAFT

Table 4-8: HEP-2 CNP Vacuum Equipment Piping & Support Evaluation

(Including CNP Condenser Condensate Piping)

HEP-2 CNP VACUUM EQUIPMENT PIPING & SUPPORT EVALUATION (32-5058510)	**Design Input** Layout, pipe size, pipe class, material, wall thickness	Seller Dwg. 02-5038016D-02, "CNP Condenser Skid Piping Isometric"
	In-structure Response Spectra	Seller Doc. 08-5037418-004, Buyer Specification No. 24590-PTF-3PS-MEVV-T0002, Rev. 4 "Cesium Nitric Acid Recovery Forced Circulation Vacuum Evaporator System", (Appendix J, Attachment 1)
	Corrosion allowance = 0.040"	Buyer Specification No. 24590-WTP-3PS-P000-T0001, Rev. 5, "Piping Material Classes General Description and Summary" (08-5032269)
	Maximum operating temp = 150ºF Design pressure =50 psig.	Seller Doc. 51-5063365, "CNP Equipment Design Conditions"
	Percentage Damping Used 5%	See Buyer Specification 24590-WTP-DC-PS-01-001, Rev. 5 below
	Methodology	Buyer Specification 24590-WTP-DC-PS-01-001, Rev. 5, "Pipe Stress Design Criteria including "Pipe Stress Criteria "and "Span Method Criteria" (08-5036324-002) Alternate Pipe Stress Methodology 38-9039408-000 SDDR 62 and 38-9039410 SDDR 2-008 Buyer Specification 24590-WTP-DC-PS-01-002, Rev. 3, "Pipe Support Design Criteria" (08-5036325-001) Computer Program Used AutoPIPE Plus-Win/ 6.20.9
	Acceptance Criteria **Code**	ASME B31.3-1996, Process Piping

DRAFT

5.0 JUSTIFICATION FOR COUPLED AND DECOUPLED ANALYSES

The recirculation loop piping will be qualified per coupled analyses as described in Section 2.3. All Off Gas piping systems may be decoupled from the separator vessels in the qualification analyses. Justification for decoupling will be provided in the pertinent calculations. Seller will use Section 3.1.7 of ASCE 4-98 to justify decoupling the Off Gas piping from the separator vessels. The mass and frequency ratio criteria from Sections 3.1.7.1 and 3.1.7.2 will be used to justify an uncoupled analysis. Similarly the Off Gas piping systems may be decoupled from the primary condenser vessels and the distillation column.

For the Off Gas piping, the static constraint concern defined in Section 3.1.7.3 of ASCE 4-98 will be addressed as follows:

> The configuration of the Off Gas piping shows each run having only two vertical spring hangers, a number of direction changes with no horizontal restraints or vertical rigid supports, and anchored only at the vessel nozzles. Seller will attempt to demonstrate that the Off Gas piping systems will not restrict movement of the separator vessel/support frame assembly, primary condenser vessel/support frame assembly, and distillation column/support frame assembly. The stiffness of the Off Gas piping relative to the stiffness of the separator, primary condenser and distillation column vessels/support frame assemblies will be determined by applying unit loads at the Off Gas piping nozzle location on the uncoupled Off Gas piping models and at the Off Gas nozzle locations on the various vessel/ support structure models. The resulting displacements will be used to demonstrate that the various vessels /support structures are significantly more rigid than the Off Gas piping systems and therefore, the Off Gas piping systems will not provide a static constraint for the various vessel/support frame assemblies.

If decoupling of the Off Gas piping systems can not be demonstrated using the above methodology, the recirculation piping coupled models may have to be expanded to include the Off Gas piping along with the primary condensers and distillation column. For other piping systems such as the steam lines between the desuperheaters and reboilers, and the primary condenser inlet and outlet water lines, Seller's current analysis approach is to seismically qualify vessels decoupled from the aforementioned piping systems. Should Buyer require that a coupled analyses be performed for these other systems, Seller must be provided with the most current piping arrangement drawings indicating location of any in-line components, supports and support function.

6.0 ANALYSIS RESULTS DELIVERABLES

Seller will summarize individual loads in tabular form, per Buyer Specification 24590-WTP-3PS-SS90-T0001, Section 7.2 [19] in a separate section in each report. The data to be provided is as follows:

1. The seismic and thermal anchor movements (SAM and TAM) at each nozzle location in the FEA global coordinate systems.

2. The mass and Center of Gravity Dimension (CGD) of vessel frame/skid

3. Interface reactions/loads for individual load conditions and load combinations from ANSYS/GTSTRUDL e.g., from Seller frame to Buyer embedments/beams, and bottom of the soleplates.

4. Interface reactions/loads from ANSYS and GTSTRUDL at vessel support locations on the frames

5. Report all locations and magnitudes of seismic and thermal displacements in excess of ± 1.0 inch (no combination) in order to avoid piping and support interferences.

6. Grayloc connector load results.

7. For each analysis, a table of natural frequencies and mass participation factors, and plots of the significant mode shapes

8. A listing of all safety-related subcomponents for each component.

9. Piping centerline displacements at the wall and floor penetrations.

10. Sketches will identify FEA global coordinate systems along with the Plant North direction for all displacements, loads, and reactions.

11. Pipe support loads on Buyer design supports as documented in Section 4.0.

7.0 VERIFICATION AND VALIDATION

In each analysis Seller will list the software used in the analysis along with documentation of their verification and validation in individual calculations. Software expected to be used include ANSYS, GTStrudl and AutoPIPE Plus. Each analysis will comply with Reference 40 Verification and Validation requirements and will reference an Seller document that presents detailed benchmark information. As an example, Seller will show the conservatism of using ANSYS shell elements by comparison to WRC 107 hand analysis. All models used in Seller analyses will be provided to Buyer for verification.

8.0 REFERENCES

1. ASME Boiler and Pressure Vessel Code, Section VIII, Divisions 1 and 2, 2004 Edition
2. Welding Research Council (WRC) Bulletin 107, Local Stresses in Spherical and Cylindrical Shells due to External Loadings
3. Seller Document Number 08-5032266, Buyer Specification 24590-WTP-3PS-MV00-T0003, Rev. 2, Pressure Vessel Fatigue Analysis
4. Seller Document Number 08-5032265, Buyer Specification 24590-WTP-3PS-MV00-T0001, Rev. 3, 04/23/07, "Engineering Specification For Pressure Vessel Design and Fabrication"
5. WinNOZL Program, Local Stress Analysis for Nozzle and Vessel Intersection by Bentley Systems
6. COMPRESS, Software for ASME Section VIII Design and Analysis by CODEWARE
7. ASME Boiler and Pressure Vessel Code, Section II, Part D, Properties, 2004 Edition
8. Seller Document Number 08-5036321, Buyer Specification 24590-WTP-3PS-MV00-T0002, Rev. 2, 12/14/03, "Engineering Specification For Seismic Qualification Criteria for Pressure Vessels"
9. ASME Boiler and Pressure Vessel Code, Section III, Subsection NCA, General Requirements for Division 1 and Division 2, 2004 Edition
10. Seller Document Number 51-5031985, "HEP-1 Equipment Design Conditions"
11. Seller Document Number 51-5063365, "CNP Equipment Design Conditions"
12. Seller Document Number 32-5031389, "Hanford Evaporator Project Number 1 – Fatigue Assessment Report"
13. Seller Document Number 32-5058514, "Hanford Evaporator Project Number 2 – Fatigue Assessment Report"
14. ANSI/AISC N690-1994, American National Standard Specification for the Design, Fabrication, and Erection of Steel Safety-Related Structures for Nuclear Facilities
15. Manual of Steel Construction, AISC Allowable Stress Design, 9th Edition, American Institute of Steel Construction, Inc.
16. GTSTRUDL Computer Program For Structural Analysis, Version 28NT Running On A Dell Computer With A Windows XP Operating System
17. Seller Document Number 08-5032211, Buyer Document No. 24590-PTF-3PS-MEVV-T0001, Revision 2, "Engineering Specification for Forced Circulation Vacuum Evaporator System"
18. Seller Document Number 08-5037418-004, Buyer Document No. 24590-PTF-3PS-MEVV-T0002, Revision 4, "Engineering Specification for Cesium Nitric Acid Forced Circulation Vacuum Evaporator System"
19. Seller Document Number 08-5032273, Buyer Document No. 24590-WTP-3PS-SS90-T0001, Revision 1, "Engineering Specification for Seismic Qualification of Seismic Category I/II Equipment and Tanks"
20. Seller Document Number 08-5036323, Buyer Document No. 24590-WTP-DC-ST-01-001, Revision 11 "Structural Design Criteria"
21. Seller Document Number 08-5036324, Buyer Document 24590-WTP-DC-PS-01-001, Rev. 5, "Pipe Stress Design Criteria including "Pipe Stress Criteria "and "Span Method Criteria"
22. Seller Document Number 32-5037397, FEP & TLP Off-Gas Piping Analysis
23. Seller Document Number 32-9045976, CNP Off-Gas Piping Analysis
24. Seller Document Number 32-9048451, HEP1, FEP-A Recirculation Loop Piping System Evaluation
25. Seller Document Number 32-9048174, HEP1, FEP-B Recirculation Loop Piping System Evaluation
26. Seller Document Number 32-9049002, HEP1, TLP Recirculation Loop Piping System Evaluation
27. Seller Document Number 32-9045700, CNP Recirculation System Loop Coupled Analysis
28. API610-1995 Centrifugal Pumps For Petroleum, Petrochemical And Natural Gas Industries
29. ASME B31.3-1996, ASME Code for Pressure Piping

30. ASCE 4-98 Seismic Analysis of Safety-Related Nuclear Structures
31. NF17: A Post-Processor Module within GTSTRUDL Based on the ASME Boiler and Pressure Vessel Code, Section III, Division I-Subsection NF, Rules for Construction of Nuclear Power Plant Components adapted on July 1, 1977, with Addenda through Winter 1979. This code checks I, channels, single angle, and structural tubing shapes profiles.
32. Tubular Exchanger Manufacturer Association, Inc; 8th Edition of TEMA Standard
33. GTSTRUDL User Reference Manual, Volume 2B, Member Selection (Steel) Commands, Revision N, Computer Aided Structural Engineering Center, School of Civil and Environmental Engineering, Georgia Institute of Technology, Atlanta, Georgia 30332-0355
34. ACI 349-90 Code Requirements for Nuclear Safety-Related Concrete Structures
35. Seller Document Number 32-9056888, TLP – Separator Vessel FEA Evaluation
36. WRC Bulletin 297, Local Stresses in Cylindrical Shells due to External Loadings on Nozzles – Supplement to WRC Bulletin No. 107 (Revision 1)
37. Seller Document Number 38-5032245, Buyer Specification 24590-WTP-3PS-G000-T0003, Rev. 01, "Packaging, Handling, and Storage Requirements"
38. List of Drawings Used for Elevations and Liquid Levels
    a. Seller Drawing 02-5038007D, Evaporator Project # 2 Separator Vessel CNP-EVAP-00001
    b. Seller Drawing 02-5030363D, Evaporator Project # 1 Separator Vessel TLP-SEP-00001
    c. Seller Drawing 02-5030361D, Evaporator Project # 1 Separator Vessel FEP-SEP-00001A
    d. Seller Drawing 02-5030362D, Evaporator Project # 1 Separator Vessel FEP-SEP-0000B
    e. Seller Document Number 08-5037418, page J-85, Buyer Drawing 24590-PTF-P3-CNP-PF00001-4000, Rev. A, "Pretreatment Facility Isometric"
    f. Seller Document Number 08-5037418, page J-86, Buyer Drawing 24590-PTF-P3-CNP-PF00001-4025, , Rev. A, "Pretreatment Facility Isometric"
    g. Seller Document Number 08-5032211, page V-133, Buyer Drawing 24590-PTF-P3-TLP-PH01384000-4000, Rev. A, "Pretreatment Facility Isometric"
    h. Seller Document Number 08-5032211, page V-135, Buyer Drawing 24590-PTF-P3-TLP-PH01384000-4001, Rev. A, "Pretreatment Facility Isometric"
    i. Seller Document Number 08-5032211, page V-121, Buyer Drawing 24590-PTF-P3-FEP-PZ0021-8000, Rev. A, "Pretreatment Facility Isometric"
    j. Seller Document Number 08-5032211, page V-122, Buyer Drawing 24590-PTF-P3-FEP-PZ0021-8025, Rev. A, "Pretreatment Facility Isometric"
    k. Seller Document Number 08-5032211, page V-126, Buyer Drawing 24590-PTF-P3-FEP-PZ221000, Rev. A, "Pretreatment Facility Isometric"
    l. Seller Document Number 08-5032211, page V-127 Buyer Drawing 24590-PTF-P3-FEP-PZ221025, Rev. A, "Pretreatment Facility Isometric"
39. "Design of Welded Structures" by Blodgett, Omer, June 1966,
40. Seller Document Number 08-9100606, Buyer Specification 24590-WTP-3PS-G000-T0014 Rev. 0, "Supplier Design Analyses"
41. Seller Document Number 38-9100623-0001 for Table 2-4 note

APPENDIX A: PARAMETRIC STUDY – UTILIZING SHELL ELEMENT STRESSES AT NOZZLE/VESSEL INTERSECTIONS

INTRODUCTION

ANSYS Shell elements are used to perform finite element analyses of several vessel assemblies in the Hanford HEP1 and HEP2 projects. For some of the nozzle/vessel intersections initially analyzed in these projects, local stress intensities (SI) due to combined deadweight, thermal, and seismic nozzle loads were above allowable limits. These shell element stress results occur where the vessel/nozzle shell elements intersect, which is at the shell element mid-planes, and not at the vessel/nozzle intersection surfaces. Normally, these results are used as a conservative basis of evaluation. The purpose of this analysis is to reduce conservatism from the stress results. The method used to reduce conservatism is to determine how shell element results compare to more accurate values from solid brick element models and then use this comparison to present results that are still conservative, but closer to actual values. Seller earlier had submitted nozzle/vessel analyses using a method found to reduce the above conservatism. Buyer has requested a more detailed explanation of this method. As a result, Seller has performed a detailed study of several nozzle/vessel configurations. This report summarizes the results and conclusions using the revised method. All nozzle and vessel dimensions used in this analysis are based on nominal dimensions minus a 0.040" corrosion allowance.

The first step used in this analysis is to determine the actual stress values at nozzle/vessel intersections. One method to determine actual stresses would be to perform extensive physical tests, but this method is beyond the scope of these projects. Another method would be to perform finite element stress analyses of nozzle/vessel intersections using solid brick elements with refined element meshes at the nozzle/vessel intersections. The latter is the method used in this study.

4-NODE SHELL and 8-NODE BRICK ELEMENT FEA MODELS

The following presents a brief description of different FEA models used on the study.

This Appendix compares FEA results of shell elements to brick elements when both models are constructed with fine meshes at the nozzle/vessel intersection. For the solid brick element models, all nozzles are modeled with five elements through the thickness. All vessels, which are mostly thicker than the associated nozzles, include from six to eleven elements across the thickness. Solid brick element models were further refined outside the fillet weld ends to obtain accurate peak stresses. For all models, the element size adjacent to the fillet weld ends is from five to eleven percent of the fillet leg size. See Figures A-12 and A-13 for a typical representation of the above mesh refinements. Refined element proportions for all solid brick models are shown in Table A-5.

- Figure A-8 shows the element mesh in the TLP Reboiler ANSYS FEA shell model near the vessel/nozzle intersection of the 2" Nozzle N06. The first row of elements in the nozzle is a typical representation of the actual vessel outside surface location.

- Figure A-9 is a shell element model of only that local region with a refined mesh created to obtain local stress distributions at the nozzle/vessel intersection without the reinforced fillet welds.

- Figures A-10 through A-13 are the solid brick element model representing the same region as the shell model in Figure A-9, but with the reinforced fillet welds. For this small nozzle, only a small segment of the vessel circumference needs to be modeled to exclude boundary condition effects. However, for large nozzles (18" and larger), 180 degrees of the vessel circumference is included. Figure A-10 shows the overall model without element details, and Figure A-11 is a sectioned portion of the model showing element detail in the nozzle/vessel intersection region. Since this model is used to evaluate stress concentrations, it was found that the element mesh shown in Figure A-11 needed to be refined at the ends of the fillet for accurate stress representations. Considering that Figure A-11 represents only a very small

portion of the full circumference, a further refined mesh at both locations would produce a model with over a million degrees of freedom. Therefore, the mesh shown in Figure A-11 was refined separately for local vessel/weld and nozzle/weld stress analyses. Figures A-12 and A-13 are refinements of the model shown in Figure A-11, where Figure A-12 is refined to approximately 1/16 the size of the minimum required fillet weld leg in the fillet/vessel region and Figure A-13 is refined similarly in the fillet/nozzle region. These refinements produce accurate peak stresses at the ends of the fillet. Note that only well-shaped six-sided brick elements are used in the intersection regions to avoid inaccurate local stresses produced by tetrahedral, pyramid, or poor element shapes

- These models are typical of the three types of models used in this study; the vessel is modeled with shell elements, local nozzle region is modeled with a refined mesh using shell elements, and local nozzle region modeled with a refined mesh using solid brick elements.

- Table A-1 lists various nozzles on different vessels used in this study.

DISCUSSION OF RESULTS

Why Elements Within the Vessel Wall Are Unselected

Figure A-3 is a typical comparison of vessel linearized SI values from a refined brick element model to the surface SI values from a refined shell element (equivalent) model, where both models have the same applied loads. The applied loads are actual maximum combined deadweight plus thermal plus seismic loads for an actual nozzle/vessel configuration. The stresses are plotted at the maximum stressed location at the nozzle/vessel intersection, starting at the edge of the shell elements (at the nozzle mean radius) and moving radially outward. The shell elements represent a typical shell element model intersection, which does not take the local fillet weld into account. The first data point for the shell element model is at the mid-plane intersection of the nozzle and vessel shell elements (Rm), as indicated by the notation at the bottom left of Figure A-3. The refined solid brick element model is also typical of such a model, including the minimum required local fillet weld at the nozzle/vessel intersection. The first data point for the brick element model is at the outer edge of the fillet ("weld toe"), as indicated at the bottom of Figure A-3. As shown in Figure A-3, the maximum SI from the shell element model is substantially higher than the maximum linearized SI from the solid brick element model and lower than the maximum peak SI from the solid brick element model. In order to determine if this difference is typical, most of the models shown in Table A-1 are analyzed (see note at bottom of Table A-1) as follows. A similar comparison could be made for nozzle stresses in the nozzle axial direction. Based on these comparisons it was concluded that the shell element stresses are more representative of those at the intersection of the nozzle and vessel after the elements within the wall thickness are unselected from the FEA results.

Table A-2 shows the various geometries analyzed with a comparison of maximum shell element SI values to solid brick element linearized results for both vessel and nozzle stresses. From these results, it can be seen that the shell element results, if taken at the modeled nozzle/vessel intersection, are conservative (from about 30 percent to over a factor of three).

Table A-2 demonstrates that shell element results at nozzle/vessel intersections, if considered as linearized stress (which is what the ANSYS shell element surface stresses represent), can be very conservative, when compared to solid brick element linearized results at the weld toe. There are two methods that could be used to remove some of the conservatism. One method would be to mesh the shell element sizes coarse enough to lower stresses to more accurate levels. Using this method, it would be very difficult to assure that the mesh density is at an optimum level (not too fine and not too coarse). Another method would be to select a location in the shell element model at a prescribed distance from the modeled mid-plane intersection. An obvious location would be

the same as the solid model (weld toe), which is the maximum stressed location in the solid brick element models. Preliminary shell element results representative of a wide range of nozzle sizes (for 2" and 24" nozzles) indicated that selecting this location would be very conservative when compared to linearized brick element results for maximum linearized vessel stresses. This result is typically shown in Figure A-3 for the 2" nozzle by comparing the "Lin SI" Stress Intensity with the "Shell Elem SI" Stress Intensity at the "End of Fillet Leg" (weld toe) location. However, as more nozzle and vessel sizes were investigated, for some of the nozzles at the maximum stress locations, solid brick element linearized results were under-predicted by the shell elements at this location by more than a factor of two. Therefore, the intersection of the outside surfaces of the vessel and nozzle was selected for shell element surface SI for comparison to solid brick element linearized SI at the weld toe. At this shell element location, vessel SI results are always conservative relative to solid brick element linearized SI. As an example, see shell element SI at nozzle outside radius Ro, shown in Figure A-3 relative to "Lin SI" at "End of Fillet Leg". However, shell element nozzle SI are not always conservative relative to solid brick element linearized SI. The results for comparison of brick element vessel and nozzle linearized SI with shell element SI taken at the intersection of the nozzle and vessel outer surfaces are shown in Table A-3. In most cases, the shell element results for nozzle SI are conservative. However, for the configurations where the vessel to nozzle thickness ratio is greater than 2.0, the shell element results are unconservative. In order to address the unconservative results, one option would be to simply use the nozzle stress results at the original mid-plane intersection for the high thickness ratio configurations. However, the SI levels at this location are overly conservative, by up to a factor of two. Therefore, when the thickness ratio is greater than 2.0, the shell element SI needs to be increased to values that will still conservatively represent the linearized solid brick element result levels. These values will be conservative, but much less than the factor of two that would result from using the mid-plane intersection values.

Comparison of Shell and Brick Elements FEA Models

Table A-1 presents the maximum linearized and peak stress results and stress multipliers for several different nozzle/vessel configurations using brick elements. Table A-4 is a sample ANSYS output of linearization results at the vessel, including the maximum total (peak) stress for Nozzle N06. Stresses are linearized through the thickness of the nozzle and vessel at the maximum stress intensity points. The selected models are for the TLP Separator, Reboiler, and Desuperheater vessels, where the nozzles are located on cylindrical portions of the vessels. removed from local discontinuities. Note that the Desuperheater nozzle is included only to provide more data for the evaluation of solid model peak stress intensity comparison to linearized stress intensity. Because of the mesh refinements at the ends of the fillets, results presented in Table A-3 are considered to be accurate SI values for later comparison to shell element results, and include a comparison of brick element model maximum peak SI to the linearized SI.

Figures A-14 through A-17 are typical stress intensity plots of the maximum stressed vessel and nozzle regions. The highest stressed locations are at the ends of the fillets. The overall stress plots are shown in Figures A-14 and A-16, and regions of highest stress are detailed in the segments shown in Figures A-15 and A-17. In Figures A-15 and A-17, the locations of ANSYS stress linearization are indicated by bold lines. Note that the ANSYS error estimate SMXB values are conservatively used in this analysis, rather than the peak stress intensities (both values are shown on Figures A-15 and A-17).

In this report, the ratio of the peak SI to the linearized SI is referred to as a "stress multiplier". This is similar to a stress concentration factor, which is applied only on a stress component level. A review of the results shows that the stress multiplier for vessel and nozzle stresses is not a function of nozzle size, but a function of the ratio of vessel thickness to nozzle thickness.

For clarity, vessel and nozzle dimensions presented in the first part of Table A-1 are not repeated in Tables A-2 and A-3. Table A-2 presents a comparison of SIs at the intersection of the nozzle and vessel using the shell

elements vs. linearized SI using the brick elements. Table A-3 presents a comparison of the same two FEA models, but the elements within the vessel thickness were unselected from the shell element FEA model. Figure A-1 is a plot of the vessel thickness to nozzle thickness ratio vs. stress multiplier (SM) for vessel stresses using the vessel SI data from Table A-1. A conservative bounding line is included in the plot, and will be used for determining stress multipliers to factor the vessel shell element equivalent "linearized" (surface) stresses to obtain shell element equivalent peak stresses. Figure A-2 is a similar plot for determining stress multipliers for nozzle stresses using the nozzle SI data from Table A-1, again with a conservatively selected bounding line. Note that conservatively selected bounding lines are included in similar subsequent data plots to assure that final results include a reasonable degree of conservatism.

Figures A-18 through A-20 are typical stress intensity plots of the maximum stressed vessel and nozzle regions. The highest stressed location is at the modeled intersection of the vessel and nozzle, which for the shell element model is at the theoretical intersection of the mid-thicknesses of the vessel and nozzle. The overall stress plots are shown in Figures A-18 and A-19. In Figure A-19, elements (and therefore, stress results) located between the theoretical mid-plane intersection and the actual outside surface locations have been removed ("unselected"). Figure A-20 is a local stress plot of Figure A-19 showing the element mesh.
Nozzle/vessel results from full vessel shell element models using typical meshes are now compared to the above refined brick element and refined equivalent shell element model results. Actual full vessel shell element models cannot always be modeled to the detail of the above detailed shell element nozzle/vessel models. For all of the full model analyses, nozzles are modeled to include nodes located at the vessel O.D. However, since it is not practical in full vessel models to model vessel shell elements at nozzles to the detail where stresses could be obtained at the nozzle O.D., results for vessel shell elements at the vessel/nozzle modeled intersection are used for comparison to the refined local model results. All results from the full vessel models are based on typical mesh densities in the current FEA reports. Figures A-4 and A-5 summarize the results of this analysis for vessel and nozzle stresses. These figures include the shell element results for the above refined local models (identified in the figures as "Equiv. Shell"). Based on these results, the vessel shell element SI are very high relative to the solid brick model linearized SI. Therefore, applying a multiplier to these values based solely on brick element peak to linearized SI ratios would be overly conservative. As a result, when using the SI for vessel stresses from the shell element model results, the brick element stress multipliers in Figure A-1 can be modified by the shell element to brick element linearized SI ratios shown by the bounding line in Figure A-4. These resulting stress multipliers are presented in Figure A-6 and are derived by simply dividing the bounding curve of Figure A-1 by the bounding curve of Figure A-4. This is shown in the following equations:

Vessel Peak Stresses Based on Brick Model = Vessel Shell Surface SI x Stress Multiplier (SM)

$$\text{SM} = \frac{Brick\_Model\_Peak\_SI}{Brick\_Model\_Linear\_SI} x \frac{Brick\_Model\_Linear\_SI}{Shell\_Model\_Surface\_SI}$$

$$\text{SM} = (Ordinate\_From\_Figure\_A-1) x \frac{1}{(Ordinate\_From\_Figure\_A-4)}$$

Note that the stress multipliers are less than 1.0 for vessel to nozzle thickness ratios greater than 2.63. It is recommended that for these configurations, the stress multiplier should be conservatively considered to be 1.0.

Figure A-7 is developed in similar manner to Figure A-6, except Figure A-7 presents the stress multipliers for the SI for nozzle stresses from shell element model results.
Finally, in the full vessel shell element models, it is noted that when a nozzle is located close to a local discontinuity that stiffens up the local region, such as the basket support plate in the desuperheater or the separator vessel internal extension and support of the vapor outlet nozzle, the nozzle/vessel stresses are lower than if these effects were not there. This was confirmed by locally restraining the brick element model of the desuperheater

nozzle at a distance consistent with the location of the basket support plate. For this reason, results of these two actual vessel/nozzle models were not included in this analysis, as noted at the end of Table A-1. Similarly, when a nozzle is located near a discontinuity that makes the local region more flexible, such as the steam inlet plenum on the reboiler, the stresses are higher than if the vessels were continuous at those locations. The effects of the plenum are evident in the high SI ratio of nearly 2.0 in Figure A-5 for the full vessel model, compared to a SI ratio of only 1.3 for the refined "equivalent" nozzle shell model. Since the full model results are higher than without the local discontinuity, these results are included in this analysis - noting that it would be inappropriate to attempt to "reduce" the full model results for this nozzle based on comparison to the refined shell and brick element models.
A list of ANSYS input files for the parametric study is provided in Table A-6.

RECOMMENDATIONS FOR EVALUATING SHELL ELEMENT RESULTS

Based on the results of this parametric study, the following methods will be used to evaluate shell element stress results at nozzle/vessel intersections:

Vessel Stress Intensity

- The vessel "linearized" SI will be the ANSYS maximum surface SI from the full vessel shell models determined at nodes located at the nozzle/vessel modeled mid-plane intersection. Should the linearized SI be above allowable limits, the linearized SI may be further reduced by the bounding line shown in Figure A-4. Some further reduction could be attained by the use of a localized solid brick element model.

- The vessel peak SI will be based on multiplying the ANSYS shell element SI determined at nodes located at the nozzle/vessel modeled mid-plane intersection by factors derived from the curve/equation of Figure A-6. The vessel SI multiplier shall not be less than 1.0. Note that some further reduction in SI could be attained by the use of a localized solid brick element model.

Nozzle Stress Intensity

- The nozzle "linearized" SI will be derived from the ANSYS maximum surface SI from the full vessel shell models determined at nodes located at the O.D of the vessel for all nozzles. This SI will be modified by dividing by the SI ratio found using the bounding line shown in Figure A-5. Some further reduction may be attained by the use of a localized solid brick element model.

- The nozzle peak SI will be based on multiplying the ANSYS shell element SI determined at nodes located at the O.D of the vessel by factors derived from the curve/equation of Figure A-7. Note that some further reduction in SI could be attained by the use of a localized solid brick element model.

An example of how to use the above methods is presented in Appendix D.

Pg V-180

Table A-1: Maximum Linearized and Peak SI from Solid Brick Element Models of Several Nozzle/Vessel Configurations

							Maximum Vessel Stress Intensity (psi)		
Vessel Name	Vessel O.D. (in.)	Vessel Thk. (in.)	Nozzle Designation	Nozzle O.D. (in.)	Nozzle Thk. (in.)	Ves. Thk./ Noz. Thk.	Linearized Stress Intensity (psi)	Total (Peak) Stress Intensity (psi)	SM Ratio, Peak to Linearized
Separator	91.000	0.460	N24	1.315	0.139	3.309	9,112	19,979	2.19
Reboiler	60.750	0.335	N05	1.315	0.139	2.410	21,930	42,803	1.95
Reboiler	60.750	0.335	N06	2.375	0.178	1.882	56,250	107,299	1.91
Separator	138.375	0.835	N13	4.500	0.297	2.811	11,230	23,516	2.09
Desuperheater	54.000	1.46	N01*	18.000	0.95	1.537	32,730	58,935	1.80
Reboiler	72.000	0.710	N03	18.000	0.585	1.214	14,530	24,666	1.70
Reboiler	60.750	0.710	N02	24.000	0.710	1.000	24,640	37,464	1.52
Separator	92.000	0.960	N04*	30.000	1.085	0.848	16,450	26,185	1.59

NOTE: The SI data is plotted in Figure A-1.
The maximum linearized SI may not be necessarily at the same location where the maximum peak SI is. (See Figure A-3)

			Maximum Nozzle Stress Intensity (psi)		
Vessel Name	Nozzle Designation	Ves. Thk./ Noz. Thk.	Linearized Stress Intensity (psi)	Peak Stress Intensity (psi)	SM Ratio, Shell to Brick
Separator	N24	3.309	33,240	54,344	1.63
Reboiler	N05	2.410	50,680	82,965	1.64
Reboiler	N06	1.882	84,240	141,518	1.68
Separator	N13	2.811	31,550	52,603	1.67
Desuperheater	N01*	1.537	50,800	84,058	1.65
Reboiler	N03	1.214	15,240	26,684	1.75
Reboiler	N02	1.000	20,640	33,686	1.63
Separator	N04*	0.848	10,930	19,287	1.76

NOTE: The SI data is plotted in Figure A-2.

*Note: The vessel near Desuperheater Nozzle N01 is reinforced internally by the basket support plate. Separator nozzle N04 extends inside vessel. Therefore, the results for these configurations are used only for stress multiplier (SM) ratio evaluation.

Table A-2: Comparison of Maximum SI from Shell Elements at Modeled Mid-Surfaces to Maximum Linearized Brick Element SI

			Maximum Vessel Stress Intensity (psi)		
Vessel Name	Nozzle Designation	Ves. Thk./ Noz. Thk.	Shell Elements, Surface	Linearized Brick Elements	SI Ratio, Shell to Brick
Separator	N24	3.309	33,056	9,112	3.63
Reboiler	N05	2.410	67,554	21,930	3.08
Reboiler	N06	1.882	99,992	56,250	1.78
Separator	N13	2.811	32,505	11,270	2.89
Reboiler	N03	1.214	19,055	14,530	1.31
Reboiler	N02	1.000	34,774	24,640	1.41

NOTE: The SI data is plotted in Figure A-4.

			Maximum Nozzle Stress Intensity (psi)		
Vessel Name	Nozzle Designation	Ves. Thk./ Noz. Thk.	Shell Elements, Surface	Linearized Brick Elements	SI Ratio, Shell to Brick
Separator	N24	3.309	53,005	33,240	1.59
Reboiler	N05	2.410	104,463	50,680	2.06
Reboiler	N06	1.882	205,241	84,240	2.44
Separator	N13	2.811	59,982	31,550	1.90
Reboiler	N03	1.214	26,574	15,240	1.74
Reboiler	N02	1.000	33,801	20,640	1.64

NOTE: The shell element stresses are taken at the modeled intersection of the nozzle and vessel, without removing elements between the nozzle mean diameter and outside surface.

Table A-3: Comparison of Shell Element SI at Outer Surface Intersection Locations to Maximum Linearized Brick Element SI

			Maximum Vessel Stress Intensity (psi)		
Vessel Name	Nozzle Designation	Ves. Thk./ Noz. Thk.	Shell Elements, Surface at Nozzle O.D.	Linearized Brick Elements	SI Ratio, Shell to Brick
Separator	N24	3.309	25,946	9,112	2.85
Reboiler	N05	2.410	53,665	21,930	2.45
Reboiler	N06	1.882	88,221	56,250	1.57
Separator	N13	2.811	28,439	11,230	2.53
Reboiler	N03	1.214	16,861	14,530	1.16
Reboiler	N02	1.000	30,112	24,640	1.22

			Maximum Nozzle Stress Intensity (psi)		
Vessel Name	Nozzle Designation	Ves. Thk./ Noz. Thk.	Shell Elements, Surface at Vessel O.D.	Linearized Brick Elements	SI Ratio, Shell to Brick
Separator	N24	3.309	23,488	33,240	0.71
Reboiler	N05	2.410	50,628	50,680	1.00
Reboiler	N06	1.882	119,754	84,240	1.42
Separator	N13	2.811	27,937	31,550	0.89
Reboiler	N03	1.214	20,177	15,240	1.32
Reboiler	N02	1.000	27,367	20,640	1.33

NOTE: The SI data is plotted in Figure A-5.

Table A-4: ANSYS Linearization Results for the TLP Reboiler 2" Nozzle N06 Local Solid Brick Element Model at the Maximum Linearized Stress Location in the Vessel

```
PRINT LINEARIZED STRESS THROUGH A SECTION DEFINED BY PATH= N06VA      DSYS=  0

         ***** POST1 LINEARIZED STRESS LISTING *****
        INSIDE NODE = 138278     OUTSIDE NODE = 138259

 LOAD STEP     1  SUBSTEP=     1
 TIME=    1.0000          LOAD CASE=  0

THE FOLLOWING X,Y,Z STRESSES ARE IN THE GLOBAL COORDINATE SYSTEM.

              ** MEMBRANE **
     SX           SY           SZ           SXY          SYZ          SXZ
  5207.        5521.        3380.        2721.        2296.        1678.
     S1           S2           S3           SINT         SEQV
  9413.        2780.        1916.        7498.        7105.

              ** BENDING **  I=INSIDE C=CENTER O=OUTSIDE
     SX           SY           SZ           SXY          SYZ          SXZ
I -0.4831E+05  -4946.      -0.4447E+05  -6658.       -4490.       -8998.
C   0.000       0.000       0.000        0.000        0.000        0.000
O  0.4831E+05   4946.       0.4447E+05   6658.        4490.        8998.
     S1           S2           S3           SINT         SEQV
I  -3698.      -0.3720E+05 -0.5683E+05  0.5313E+05  0.4653E+05
C   0.000       0.000       0.000        0.000        0.000
O  0.5683E+05  0.3720E+05   3698.       0.5313E+05  0.4653E+05

              ** MEMBRANE PLUS BENDING **  I=INSIDE C=CENTER O=OUTSIDE
     SX           SY           SZ           SXY          SYZ          SXZ
I -0.4311E+05   575.9      -0.4109E+05  -3936.       -2194.       -7321.
C   5207.       5521.       3380.        2721.        2296.        1678.
O  0.5352E+05  0.1047E+05  0.4785E+05   9379.        6786.       0.1068E+05
     S1           S2           S3           SINT         SEQV
I   985.4      -0.3473E+05 -0.4987E+05  0.5086E+05  0.4523E+05
C   9413.       2780.       1916.        7498.        7105.
O  0.6422E+05  0.3964E+05   7973.       0.5625E+05  0.4884E+05

              ** PEAK **  I=INSIDE C=CENTER O=OUTSIDE
     SX           SY           SZ           SXY          SYZ          SXZ
I   2478.      -261.5       2093.        2332.        1887.        1566.
C  -2438.       871.0      -1969.       -1526.       -1202.       -1490.
O  0.1722E+05  -6093.      0.1352E+05   2037.        1334.        9501.
     S1           S2           S3           SINT         SEQV
I   5440.       712.2      -1842.        7282.        6399.
C   1585.      -697.5      -4424.        6009.        5254.
O  0.2524E+05   5698.      -6286.       0.3152E+05  0.2756E+05

              ** TOTAL **  I=INSIDE C=CENTER O=OUTSIDE
     SX           SY           SZ           SXY          SYZ          SXZ
I -0.4063E+05   314.4      -0.3899E+05  -1604.       -307.4       -5755.
C   2769.       6392.       1411.        1195.        1094.        187.6
O  0.7074E+05   4374.       0.6137E+05  0.1142E+05   8120.       0.2018E+05
     S1           S2           S3           SINT         SEQV         TEMP
I   377.4      -0.3402E+05 -0.4567E+05  0.4604E+05  0.4147E+05   123.0
C   6970.       2424.       1179.        5791.        5280.
O  0.8908E+05  0.4535E+05   2051.       0.8703E+05  0.7537E+05   123.0
```

Table A-5: Brick Element Model Mesh Refinement Details

	Nozzle Description	Sep. N24	Reb. N05	Reb. N06	Sep. N13	Desup N01	Reb. N03	Reb. N02	Sep. N04
	Nozzle Size (in.)	1	1	2	4	18	18	24	30
	Ves. Thk./Noz. Thk.	3.309	2.410	1.882	2.811	1.537	1.214	1.000	0.848
VESSEL	Thru Thk. Element Size, % Ves. Thk.	9.1	12.5	14.3	10.0	16.7	16.7	16.7	16.7
VESSEL	Element Size Next to Fillet Weld Leg, % Weld Leg	8.3	6.3	5.6	6.2	6.6	8.5	9.1	10.8
NOZZLE	Thru Thk. Element Size, % Noz. Thk.	20.0	20.0	20.0	20.0	20.0	20.0	20.0	20.0
NOZZLE	Element Size Next to Fillet Weld Leg, % Weld Leg	6.9	5.3	6.5	5.1	8.9	7.8	10.1	9.5

Note: All element sizes next to the fillet weld legs in the circumferential direction are maintained at an arc of approximately one degree, assuring good element proportions.

Pg V-185

Table A-6: List of ANSYS Input File for Parametric Study

	Vessel Name	Nozzle Designation	Nozzle O.D.	ANSYS Input Files
			(in.)	
Shell Element Models	Separator	N24	1.315	01inNozREbShellINP.txt
	Reboiler	N05	1.315	01NozN05RebShellNP.txt
	Reboiler	N06	2.375	02inNozN06RebShellINP.txt
	Separator	N13	4.500	04in NozN13SepShellINP.txt
	Desuperheater	N01	18.000	18inNozN01DesupShellINP.txt
	Reboiler	N03	18.000	18inNozN03RebShellINP.txt
	Reboiler	N02	24.000	24inNozN02RebShellINP.txt
	Separator	N04	30.000	30inNozN04SepShellINP.txt
Brick Element Models	Separator	N24	1.315	CylNoz01inSepN24RN5TestINP.txt
	Reboiler	N05	1.315	CylNoz01inRebRN5TestINP.txt
	Reboiler	N06	2.375	CylNoz02inRN5TestINP.txt
	Separator	N13	4.500	CylNoz04inRN5BTestINP.txt
	Desuperheater	N01	18.000	CylNoz18inDesupRN5TestINP.txt CylNoz18inDesupRN5ATestINP.txt
	Reboiler	N03	18.000	CylNoz18inBN5TestINP.txt CylNoz18inCV5TestINP.txt
	Reboiler	N02	24.000	CylNoz24inRN5ATestINP.txt CylNoz24inRV6TestINP.txt
	Separator	N04	30.000	CylNoz30inSepRN5TestINP.txt CylNoz30inSepRV6TestINP.txt

Pg V-186

Figure A-A-1: Vessel Thickness / Nozzle Thickness vs. Brick Element Vessel Stress Multiplier (Peak SI / Linearized SI)

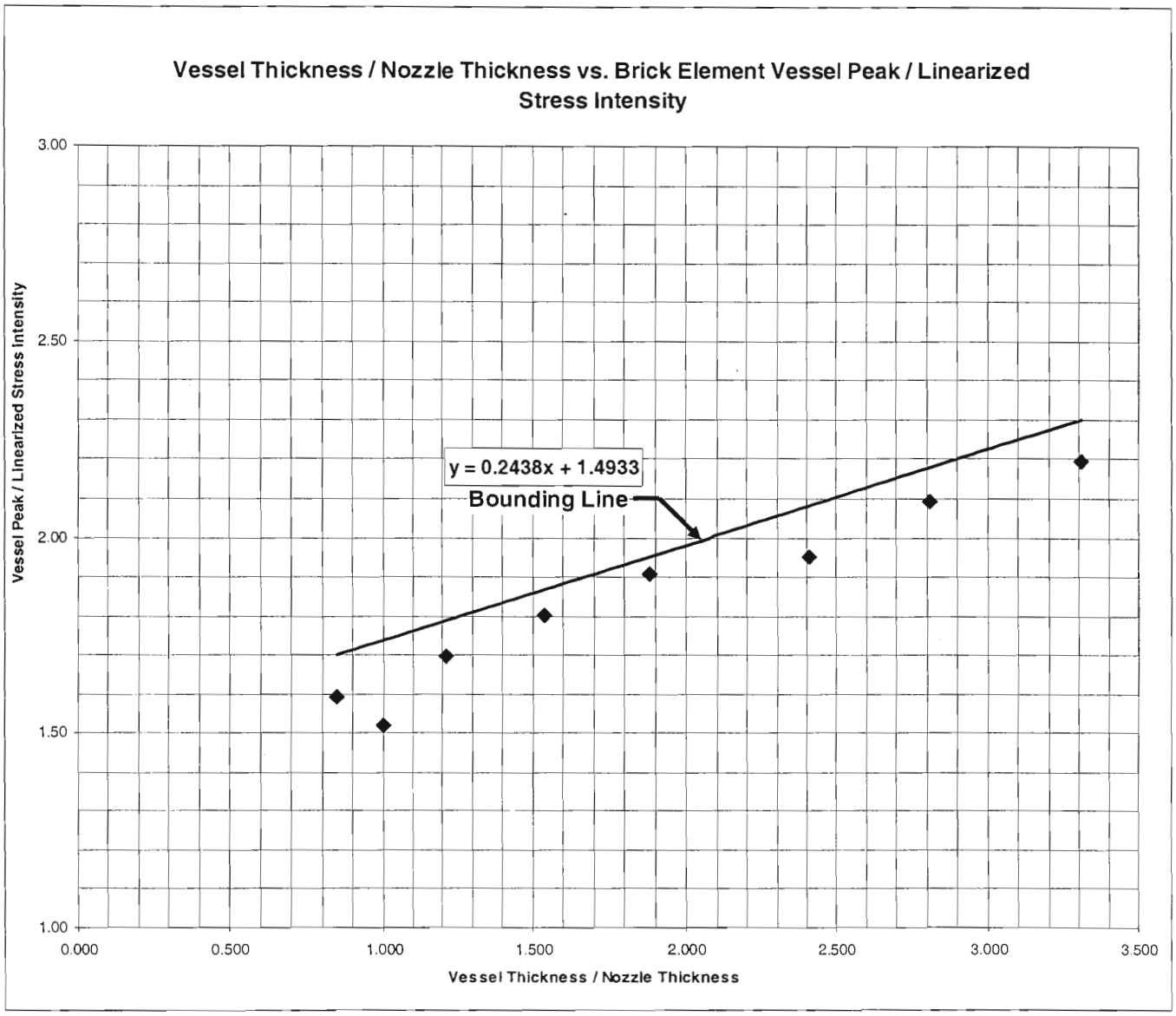

NOTE: The source data is from Table A-1 for vessel stresses.

Pg V-187

Figure A-A-2: Vessel Thickness / Nozzle Thickness vs. Brick Element Nozzle Stress Multiplier (Peak SI / Linearized SI)

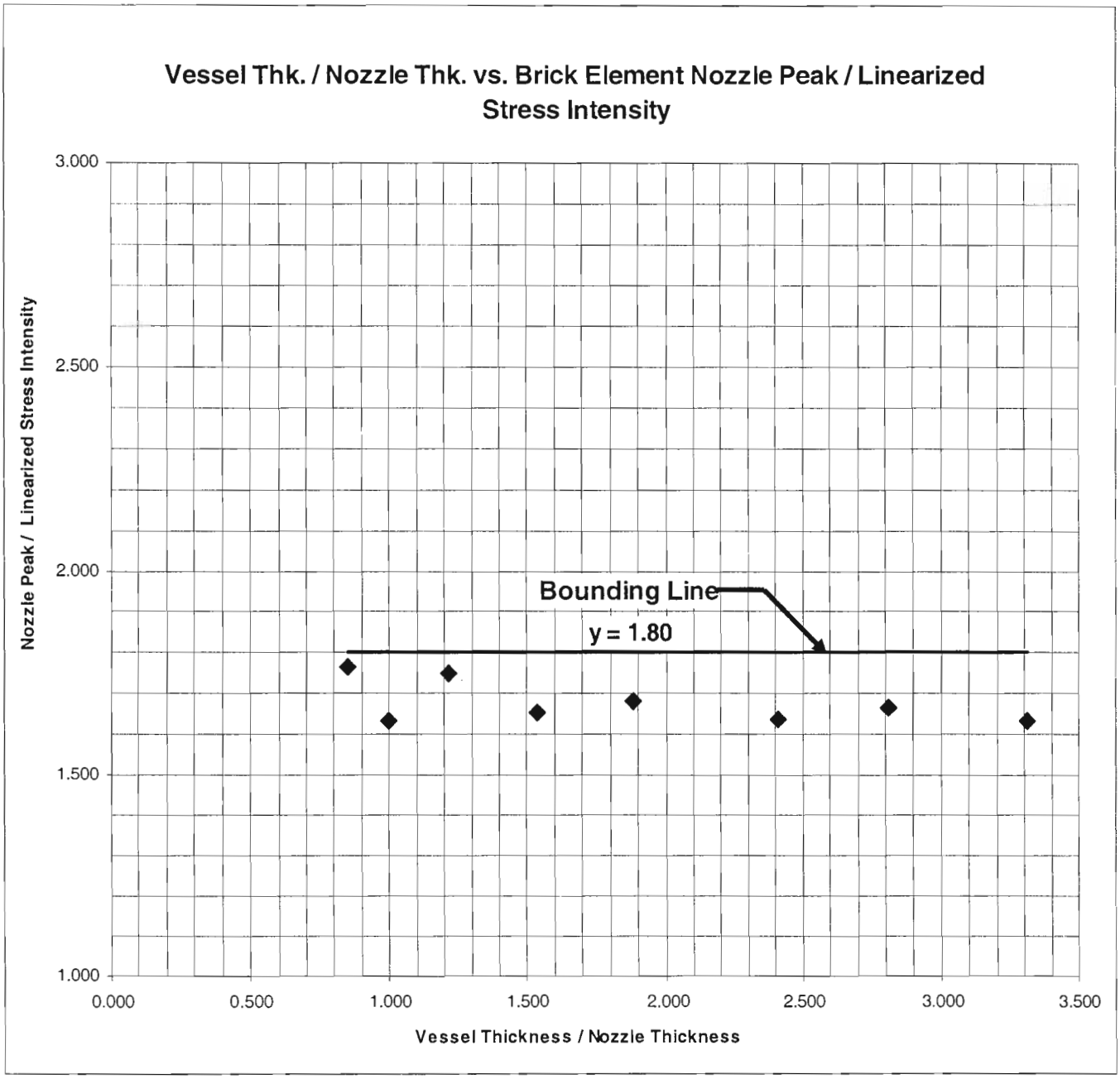

NOTE: The source data is from Table A-1 for nozzle stresses.

Figure A-A-3: Comparison of ANSYS Shell Element and Brick Element Results for TLP Reboiler Vessel, 2" Nozzle N06 Model

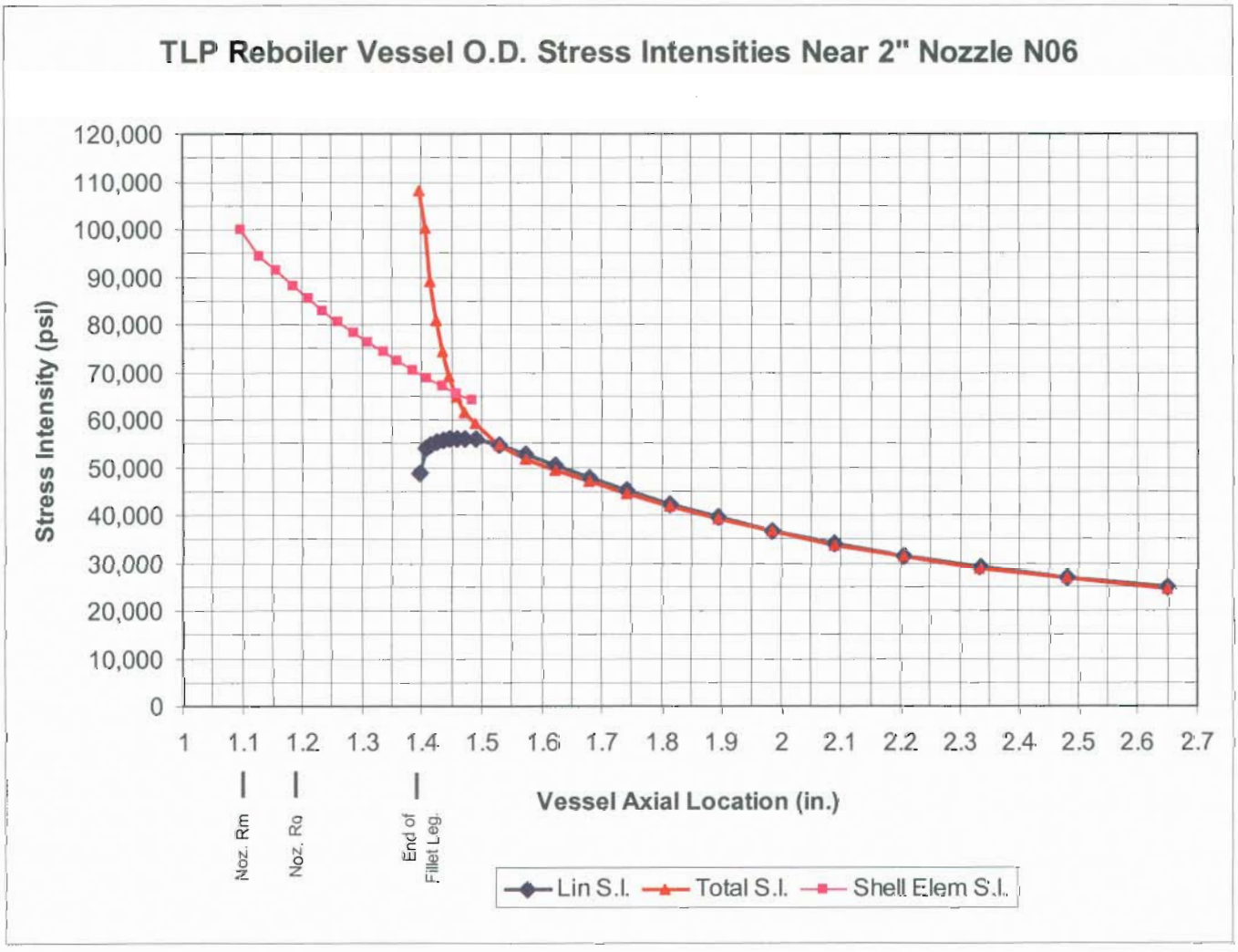

Definitions: Rm is the mean radius of the nozzle.
Ro is the outside radius of the nozzle.

Figure A-A-4: Vessel Thickness/Nozzle Thickness vs. Shell SI to Brick Element Linearized SI Ratio for Vessel Stresses

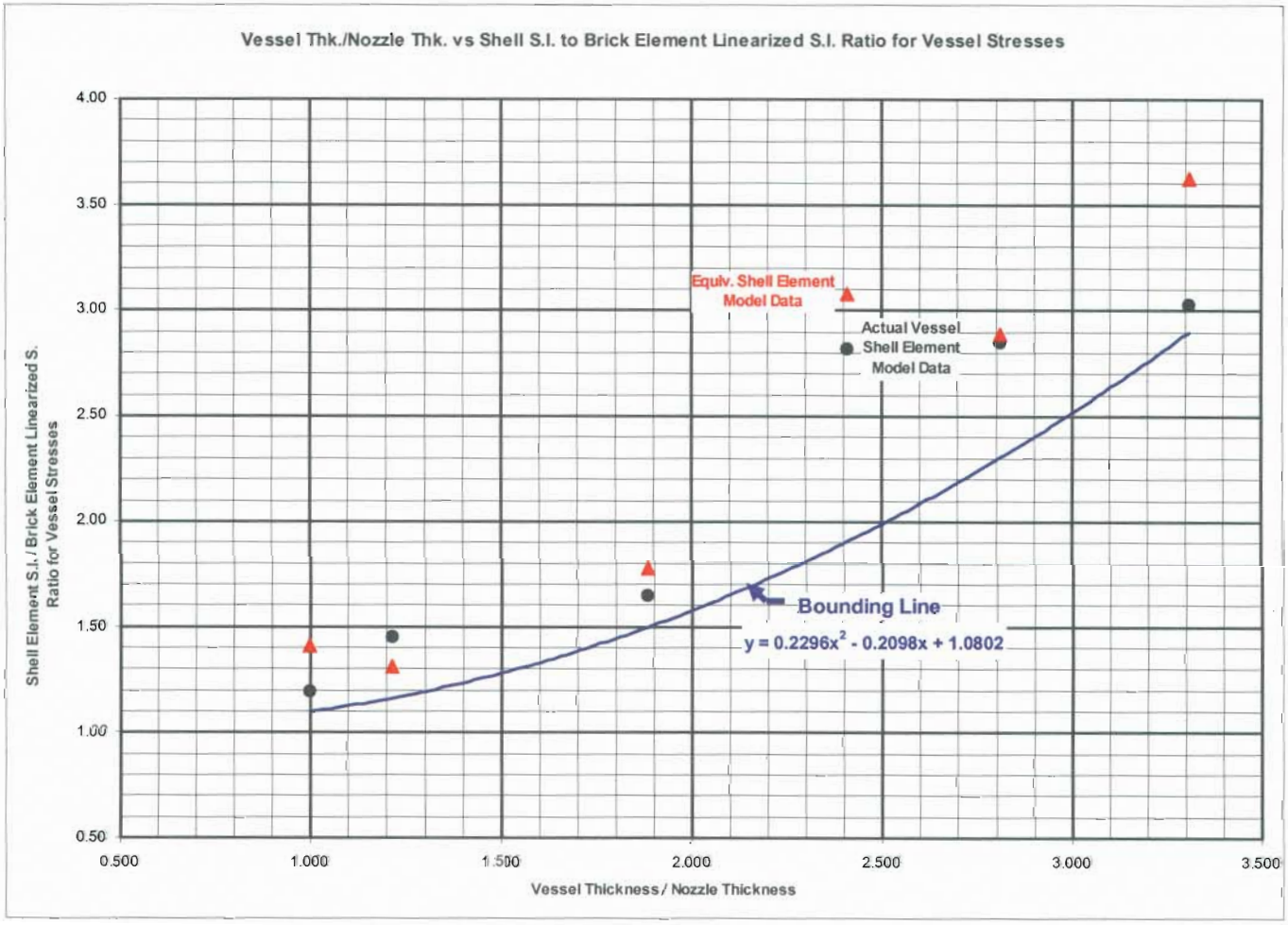

Notes:

1. Vessel SI are conservatively taken at the modeled intersection of nozzle/vessel.
2. Data represented by triangular points are from Table A-2. Data represented by round points are from actual vessel models that are not included in this report and are presented for information purposes only.

Figure A-A-5: Vessel Thickness/Nozzle Thickness vs. Shell SI to Brick Element Linearized SI Ratio for Nozzle Stresses

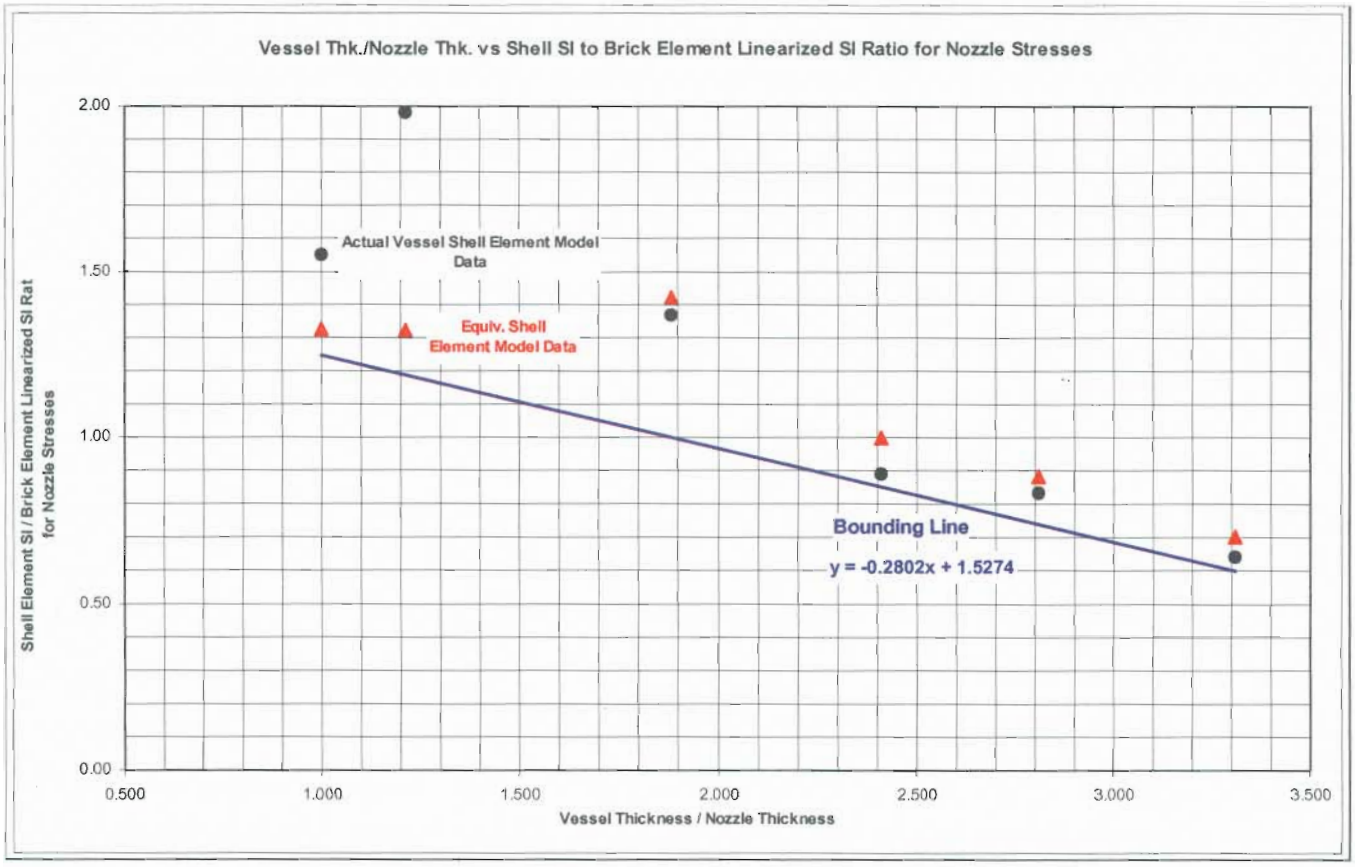

Note: Data represented by triangular points are from Table A-3. Data represented by round points are from actual vessel models that include variations in mesh densities and local discontinuities. These models are not included in this report and are presented for information purposes only.

Figure A-A-6: Stress Multipliers for Vessel Peak Stresses, Based on the Vessel Stress Multiplier Bounding Line of Figure A-1 Divided by the Bounding Line Data of Figure A-4

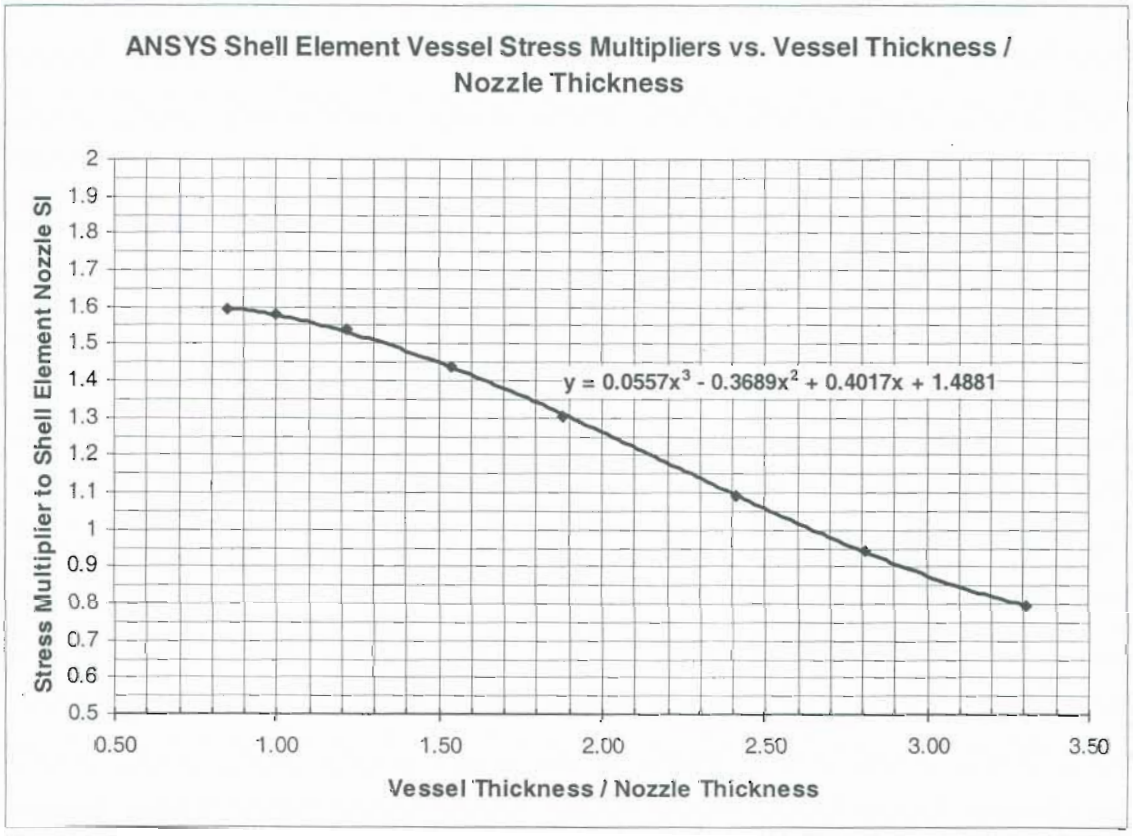

Note: Vessel SI Stress Multiplier is limited to not less than 1.0.

Note: It is recommended that a stress multiplier of 1.0 be conservatively used for thickness ratios greater than 2.63.

Figure A-A-7: Stress Multipliers for Nozzle Peak Stresses, Based on the Vessel Stress Multiplier Bounding Line of Figure A-2 Divided by the Bounding Line Data of Figure A-5

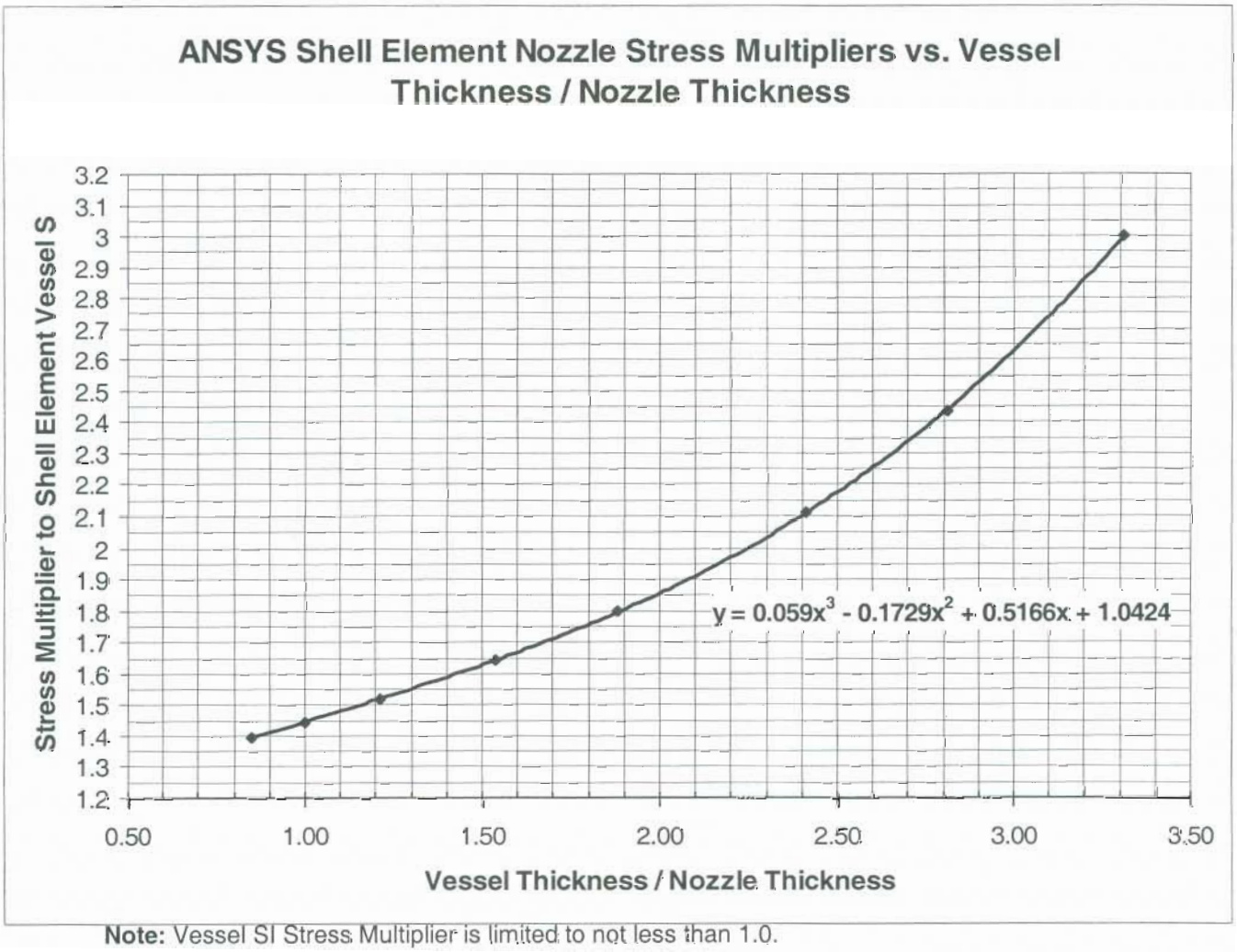

Note: Vessel SI Stress Multiplier is limited to not less than 1.0.

Figure A-A-8: Element Mesh in the TLP Reboiler Vessel ANSYS FEA Shell Element Model Near the Vessel/Nozzle Intersection of the 2" Nozzle N06

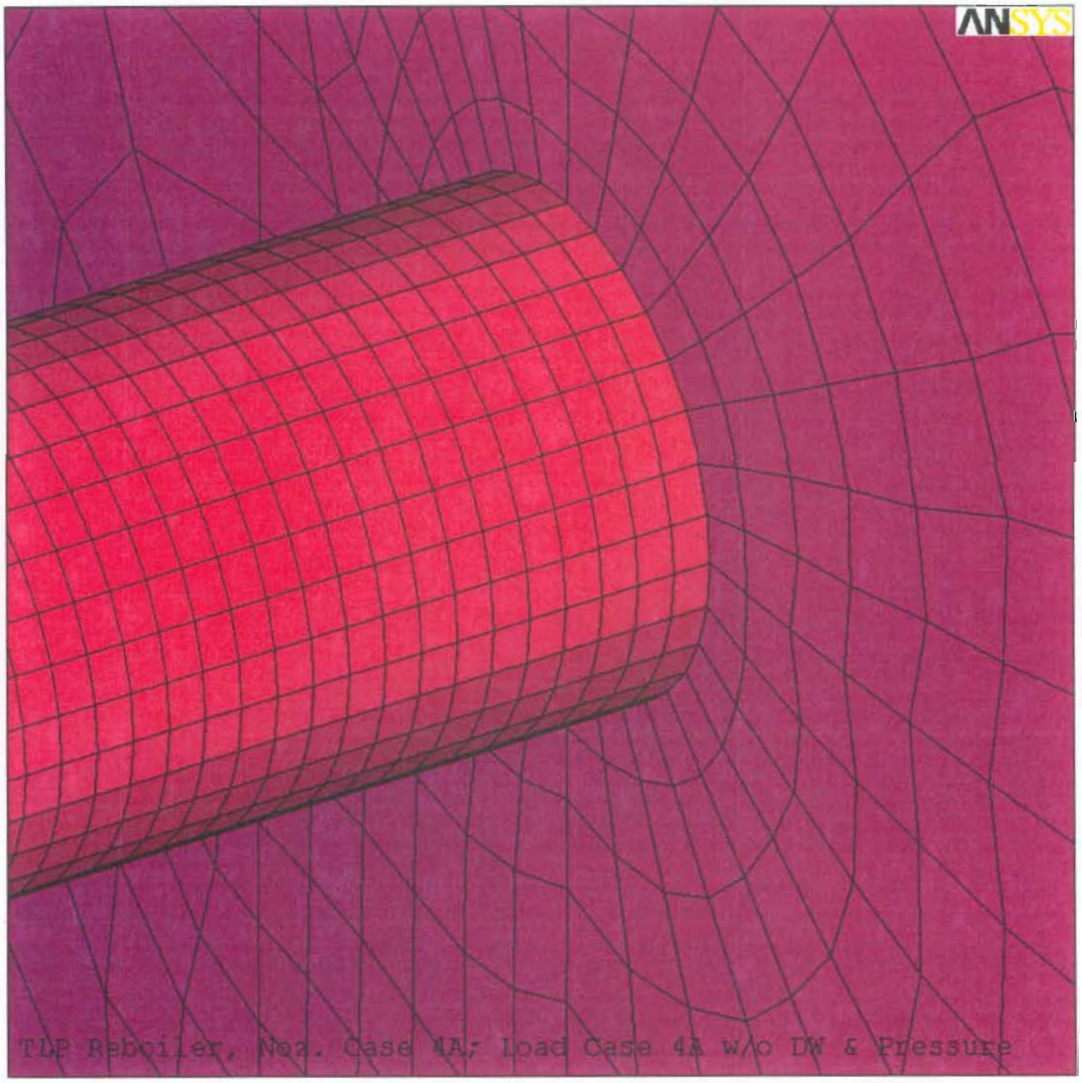

Figure A-A-9: Element Mesh in the TLP Reboiler ANSYS FEA Local Shell Element Model Near the Vessel/Nozzle Intersection of the 2" Nozzle N06

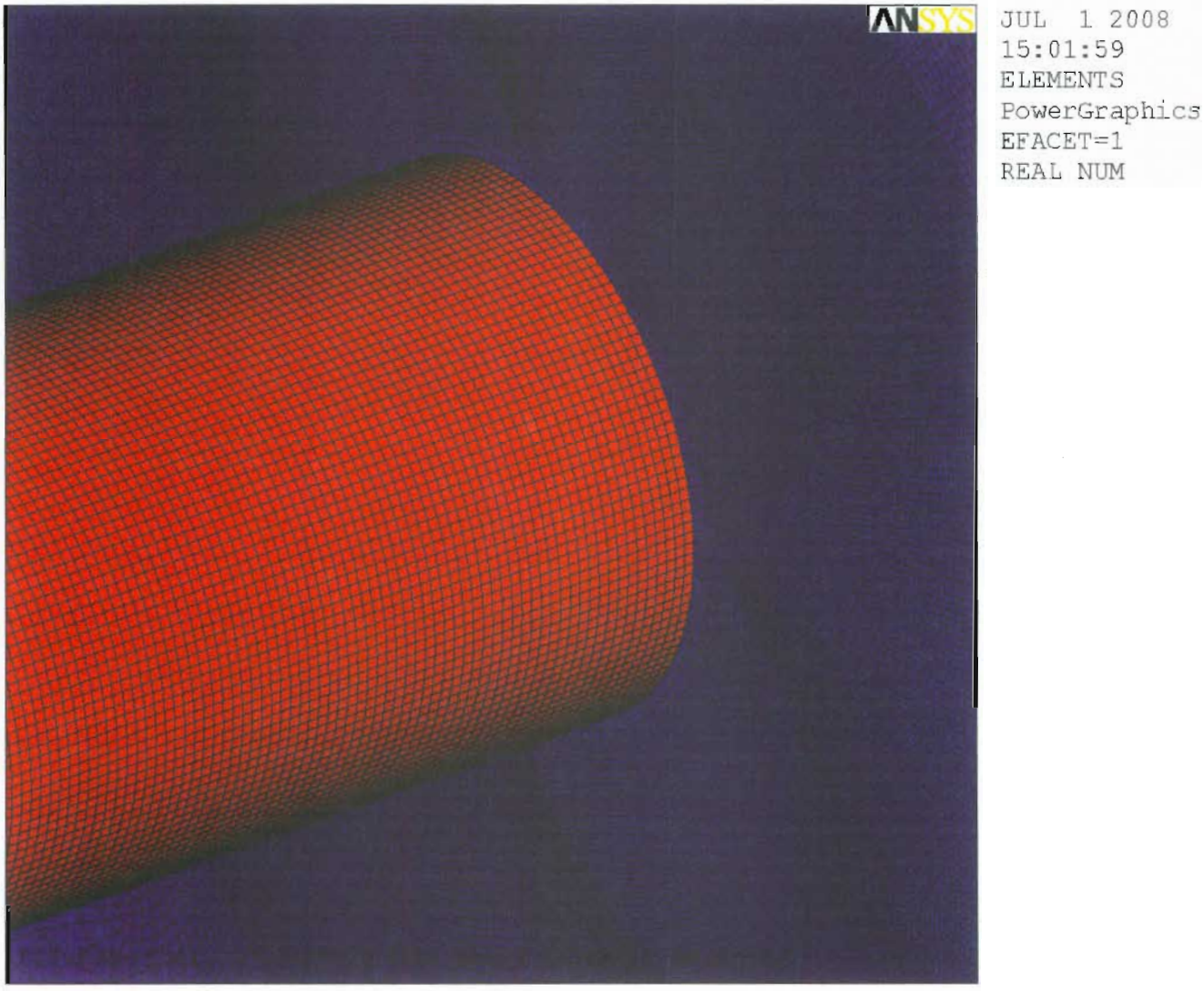

Figure A-A-10: Element Mesh in the TLP Reboiler ANSYS FEA Local Solid Brick Element Model Near the Vessel/Nozzle Intersection of the 2" Nozzle N06; w/o Element Details

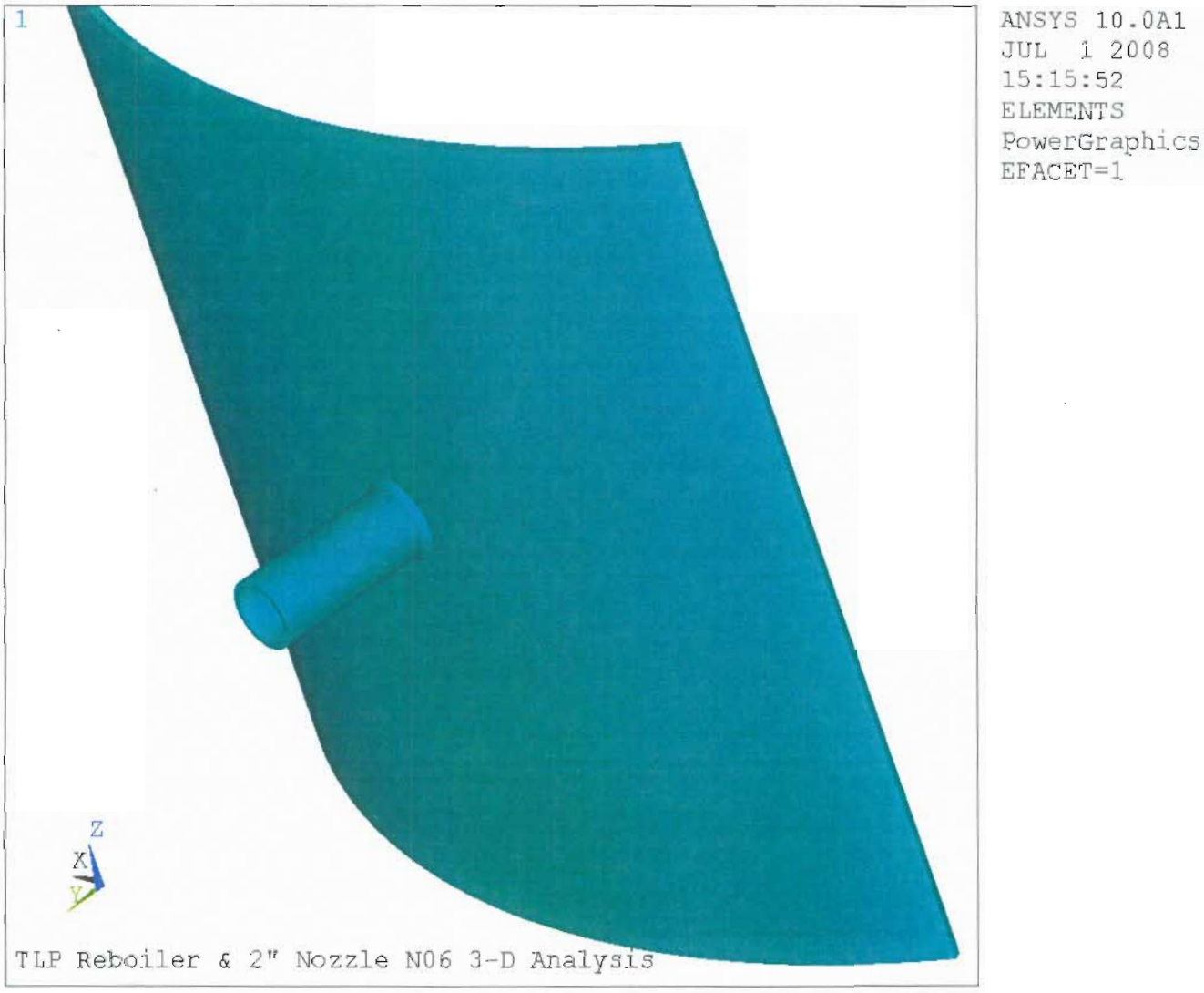

Pg V-19b

Figure A-A-11: Element Mesh in the TLP Reboiler ANSYS FEA Local Solid Brick Element Model Near the Vessel/Nozzle Intersection of the 2" Nozzle N06; Sectioned to Show 3-D Details

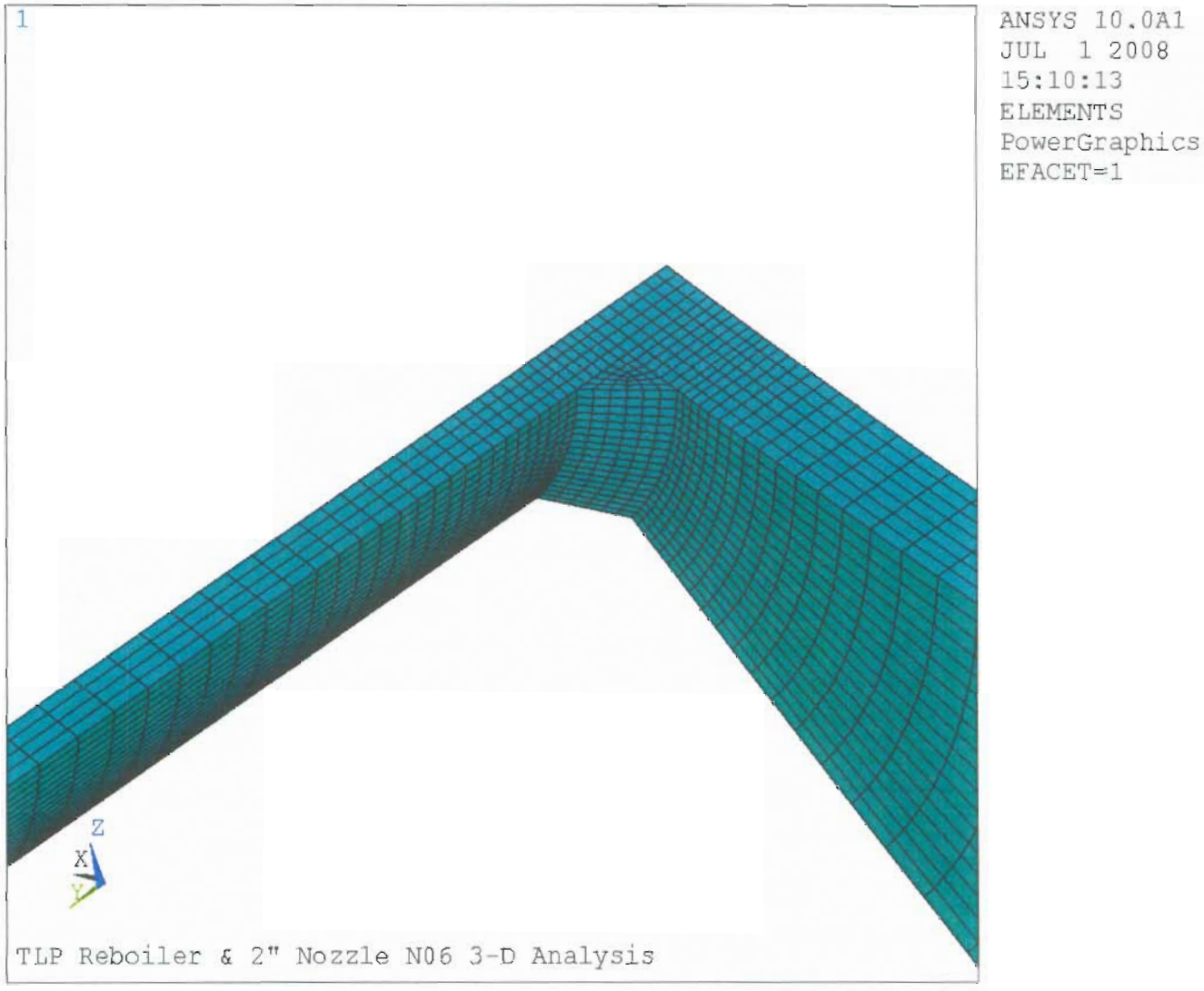

Pg V-197

Figure A-A-12: TLP Reboiler ANSYS FEA Brick Element Model From Figure A-11, Mesh Refined at Fillet/Vessel Region for Local Stress Evaluation

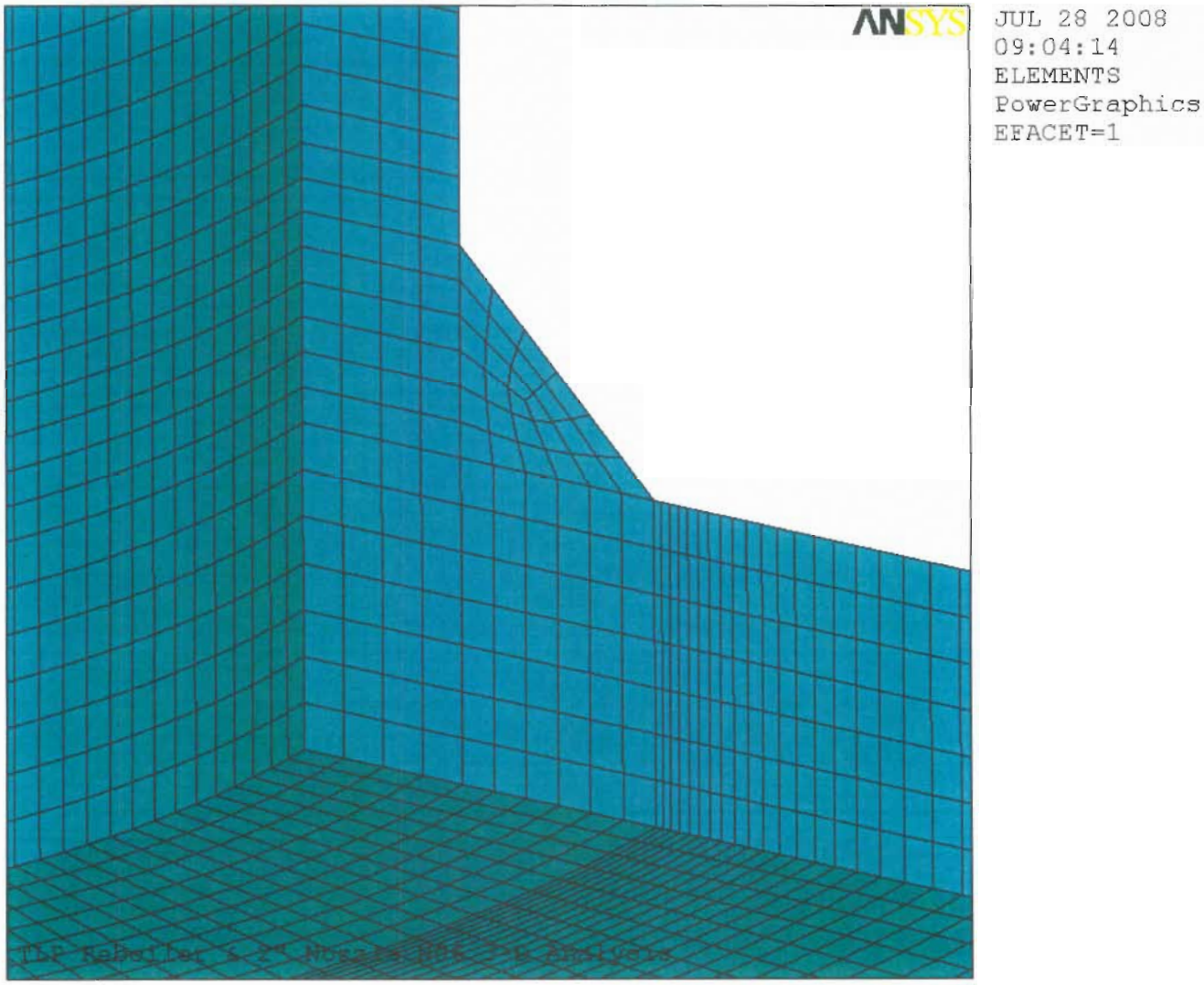

Figure -A-13: TLP Reboiler ANSYS FEA Brick Element Model From Figure A-11, Mesh Refined at Fillet/Nozzle Region for Local Stress Evaluation

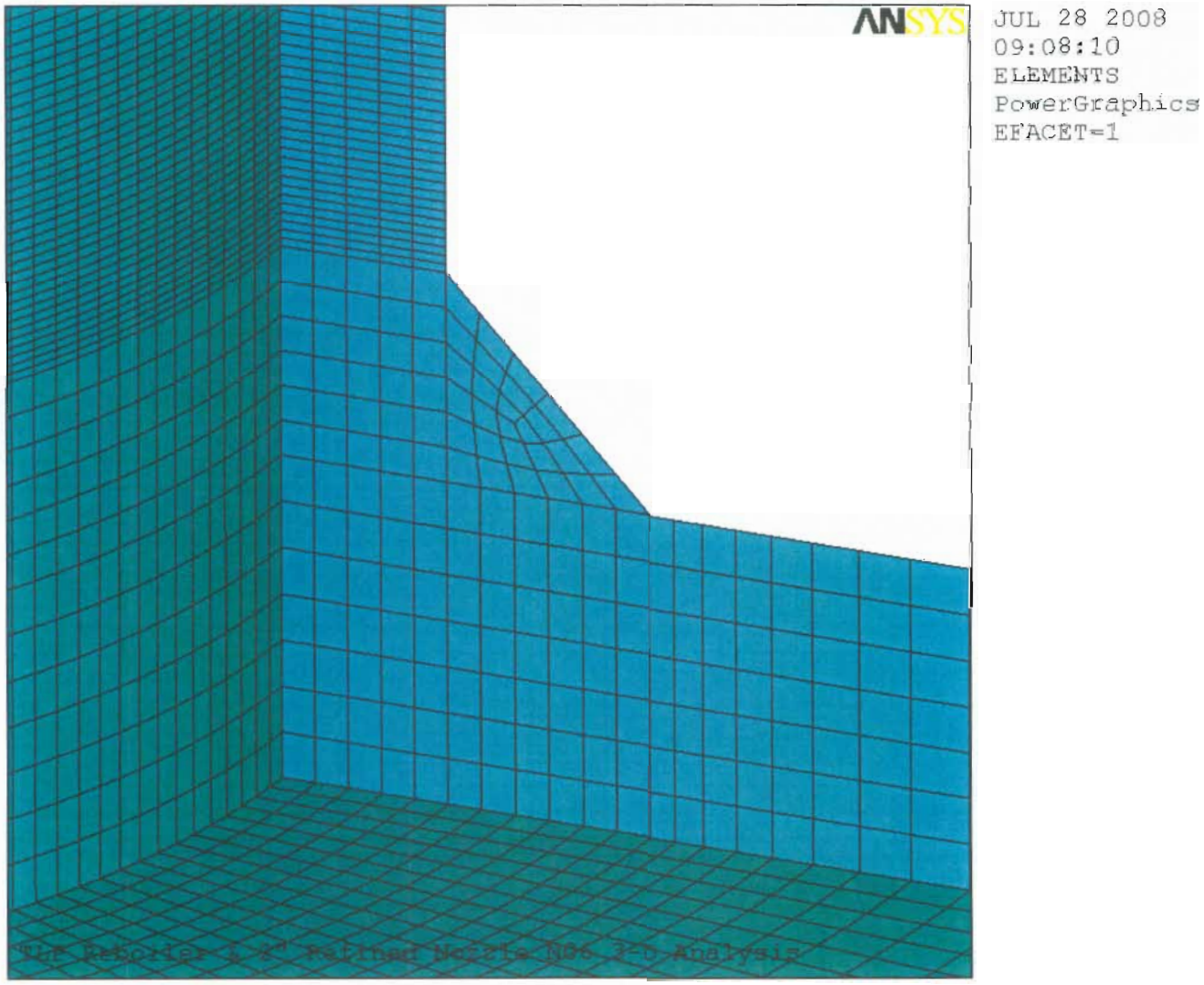

Figure A-A-14: TLP Reboiler ANSYS 2" Nozzle N06 FEA Brick Element Model; Stress Intensities

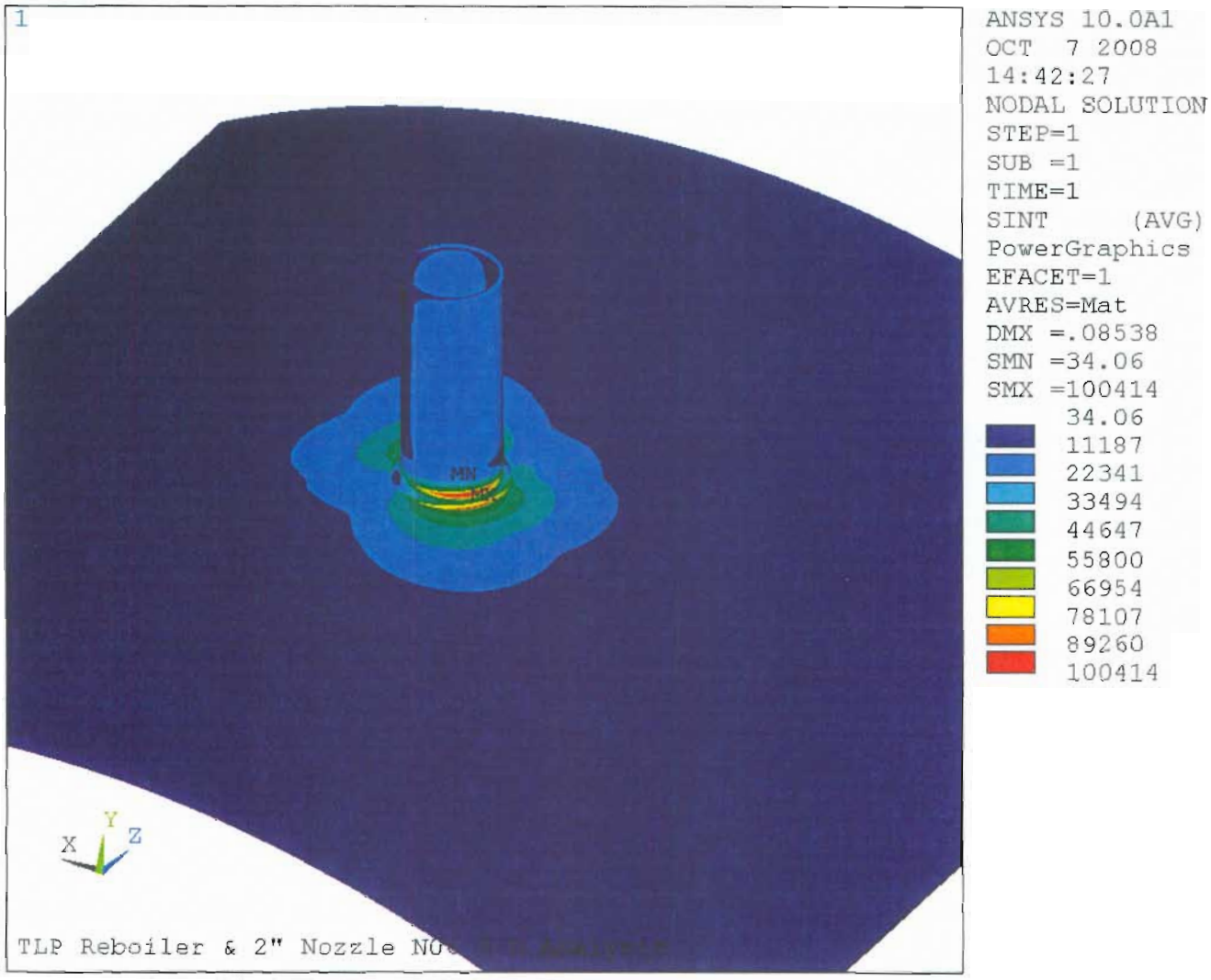

Figure A-A-15: TLP Reboiler ANSYS 2" Nozzle N06 FEA Brick Element Model; Maximum Stress Intensities at Fillet/Vessel Region

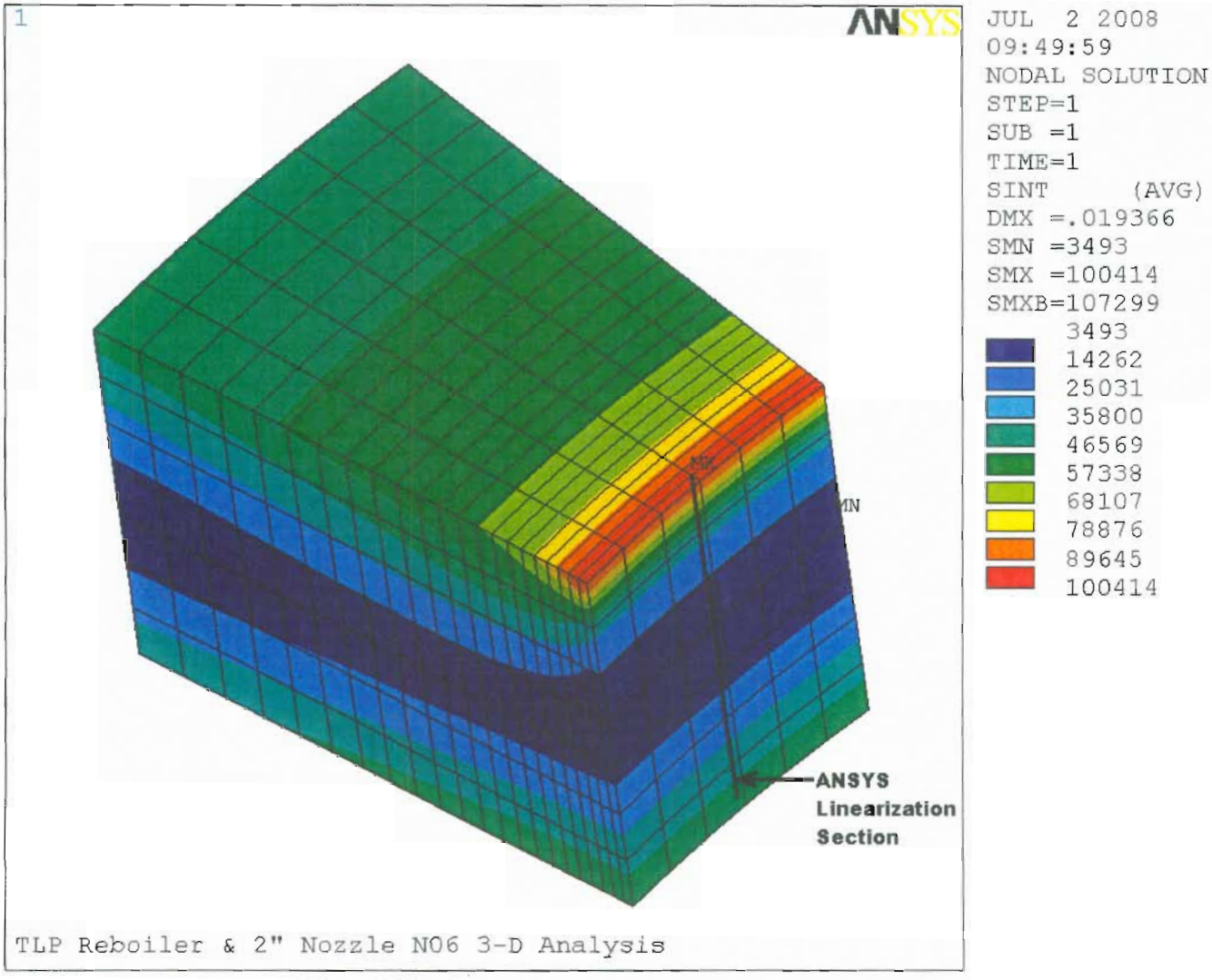

Pg V-201

Figure A-A-16: TLP Reboiler ANSYS 2" Nozzle N06 FEA Brick Element Model; Stress Intensities

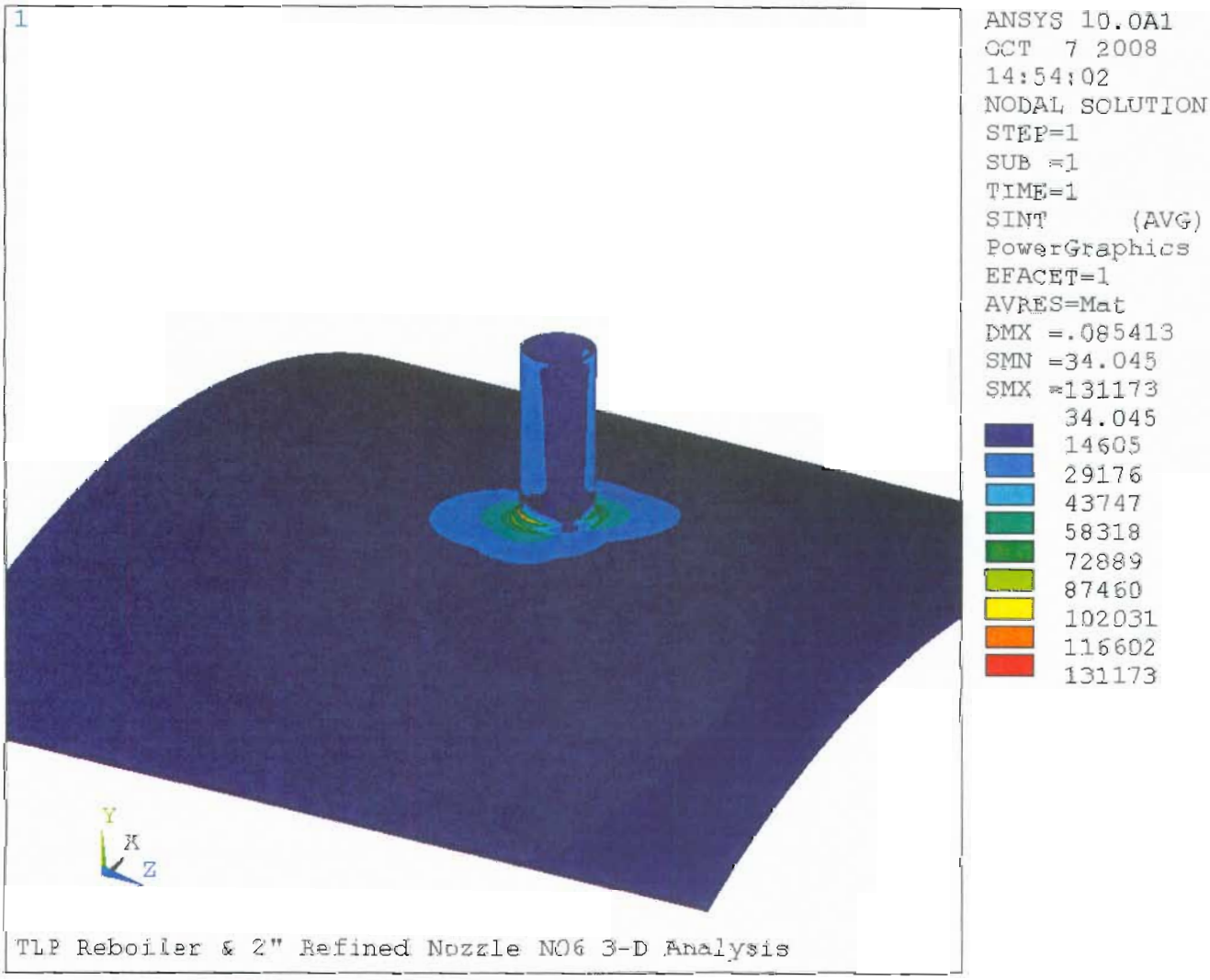

Pg V-202

Figure A-A-17: TLP Reboiler ANSYS 2" Nozzle N06 FEA Brick Element Model; Maximum Stress Intensities at Fillet/Nozzle Region

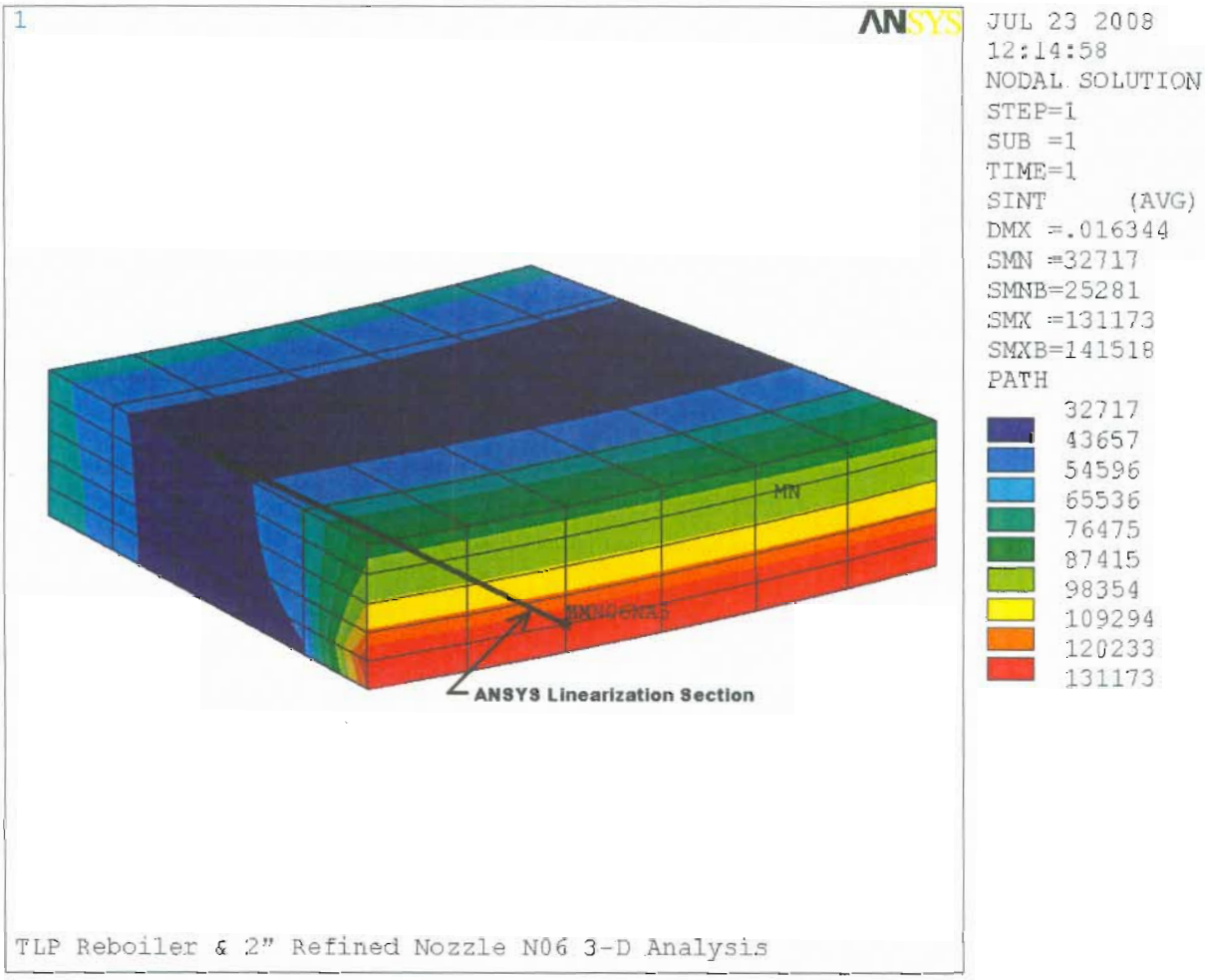

Figure A-A-18: TLP Reboiler ANSYS 2" Nozzle N06 FEA Shell Element Model; Stress Intensities With All Elements Selected

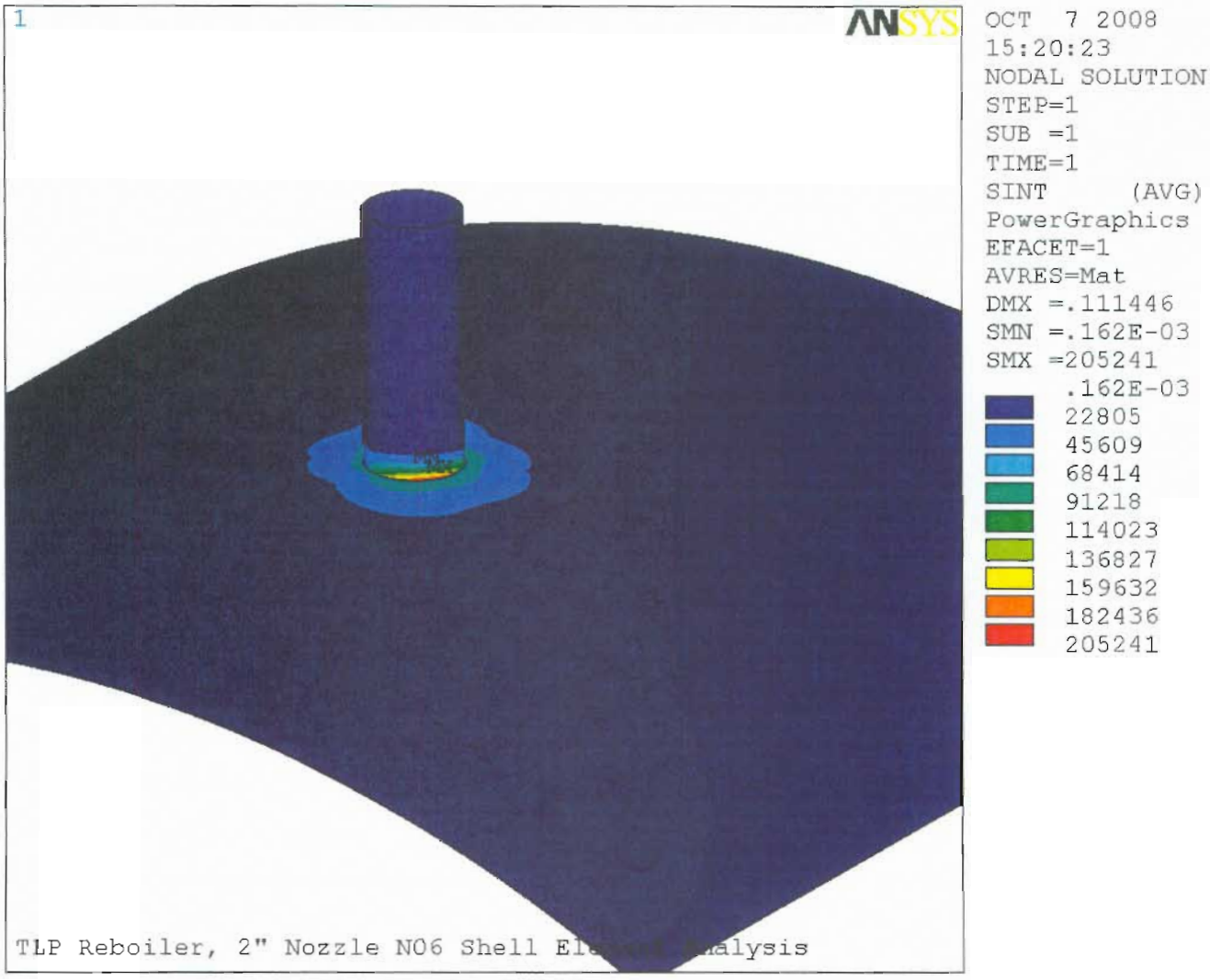

Pg V-204

Figure A-A-19: TLP Reboiler ANSYS 2" Nozzle N06 FEA Shell Element Model With Elements Within Nozzle/Vessel Intersection Removed; Stress Intensities

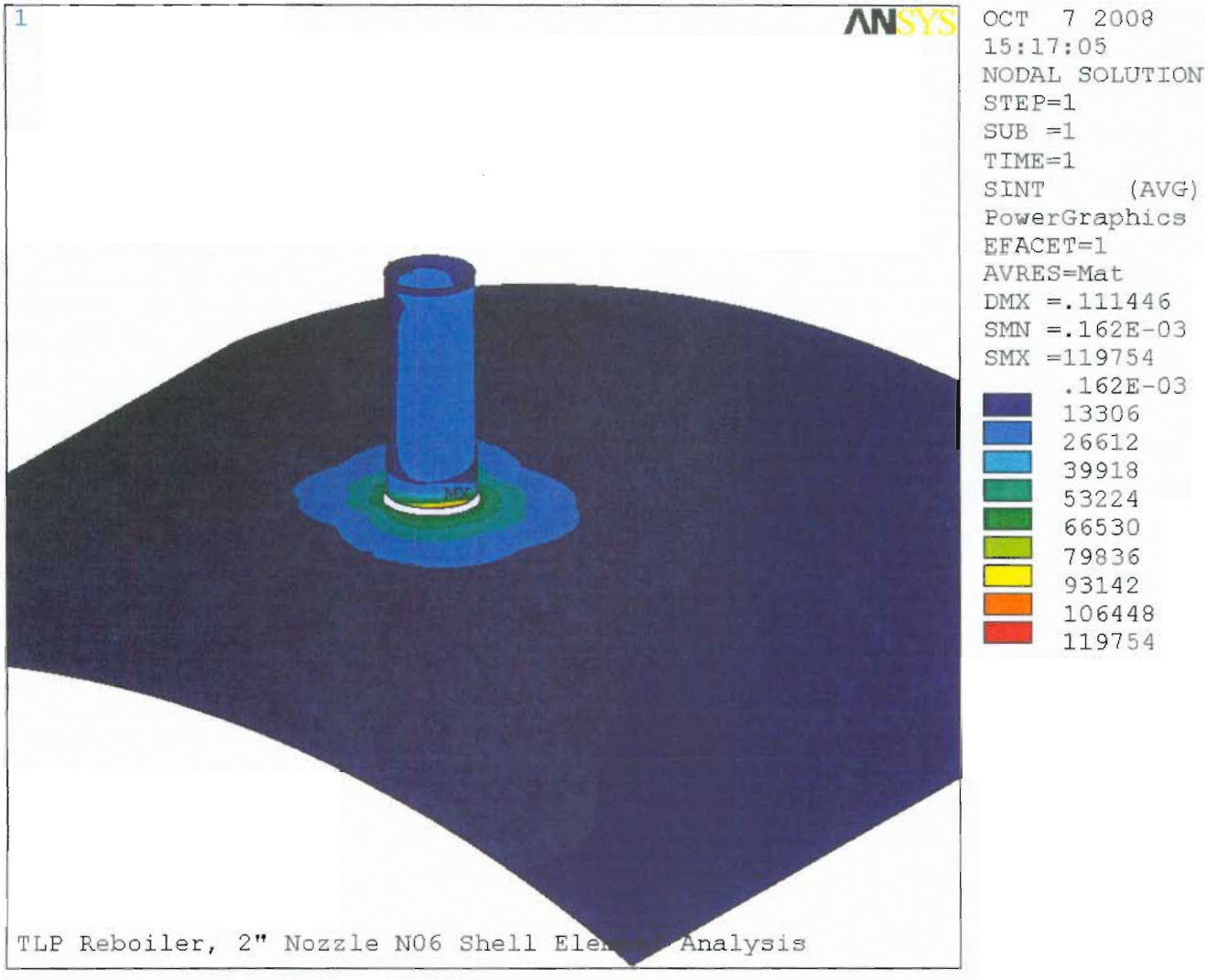

Pg V-205

Figure A-A-20: TLP Reboiler ANSYS 2" Nozzle N06 FEA Shell Element Model With Elements Within Nozzle/Vessel Intersection Removed; Maximum Local Stress Intensities

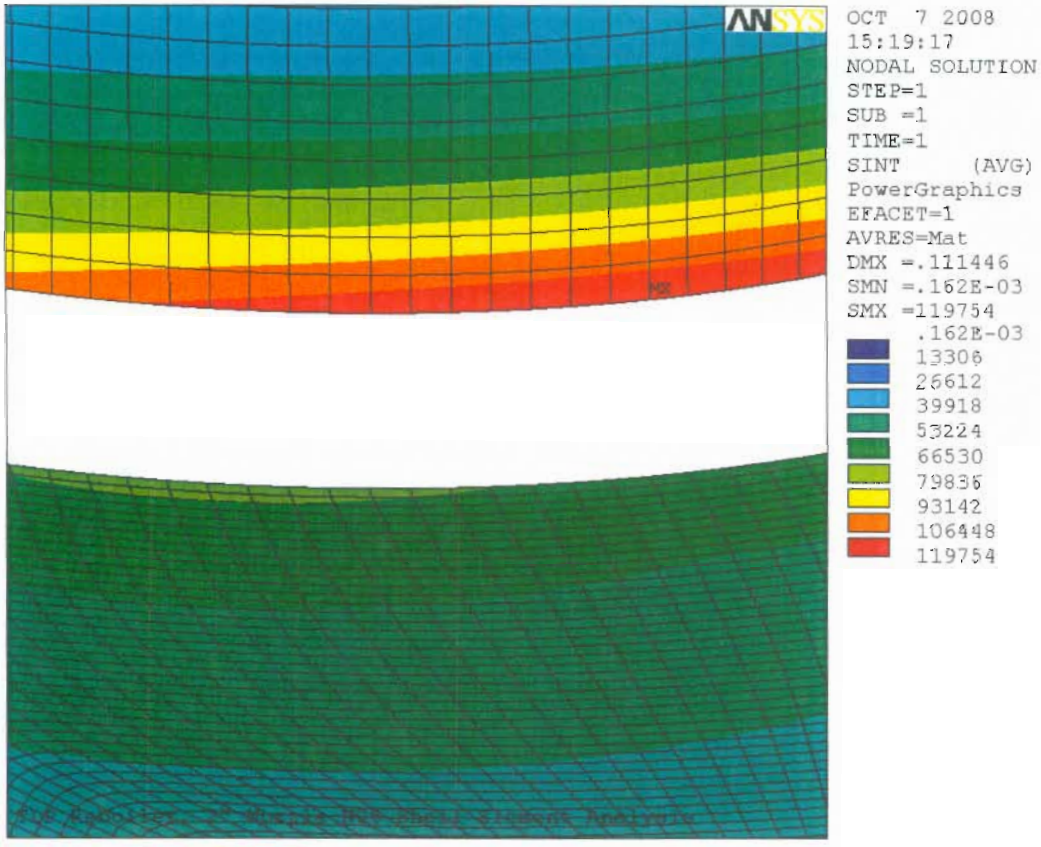

APPENDIX B: BECHTEL NATIONAL INC. CHECK LIST

	Required Data	Source Reference	Applicable Section of Seismic Qualification Report
1	**Identification and Description of Equipment**		
1.1	Equipment Tag Number or other identification that uniquely defines the equipment	24590-WTP-3PS-SS90-T0001 §7.1.2(a) This document is applicable to analysis of the many of the HEP 1 and HEP 2 vessels. Tag numbers for this report are unnecessary.	See the front sheet.
1.2	Identification of safety functions of the equipment that must be provided during and after a design basis earthquake (DBE)	Not Applicable. This document is applicable to may of the analysis for the HEP 1 and HEP 2 vessels. The design data, dimensions, material properties, and physical configurations and required safety functions to resist DBE will be included separately in the individual analysis of each vessel.	N/A
1.3	Identification and description of the parts or features of the equipment that perform the safety functions and are therefore required to resist the DBE (this includes identification of Seismic Categories of relevant components or parts of the equipment)	See Item 1.2 above	See Item 1.2 above
1.4	Identification of basic material properties, key dimensions, and physical configuration of the equipment, including reference to design drawings/documents (including revision designation) that are used to control the design/configuration of the equipment	See Item 1.2 above	See Item 1.2 above
2	**Description of Analyses and Methodology**		
2.1	Reference to governing code(s) that specify ultimate or yield values (code allowable strength or stress levels)	See Item 1.2 above	See Item 1.2 above
2.2	Identification of the code-defined strength or stress levels used in the analyses (the capacity of the equipment based on code ultimate or yield values)	See Item 1.2 above	See Item 1.2 above
2.3	Definition of the seismic loads (earthquake loadings) used in the analysis (e.g., in-structure response spectra)	See Item 1.2 above	See Item 1.2 above

Pg V-206

Required Data	Source Reference	Applicable Section of Seismic Qualification Report
2.4 Identification of equipment aging processes (e.g., corrosion, erosion, radiation, vibration/thermal fatigue, etc.), documentation or reference to documentation of these affects on material properties over the design life of the equipment, and evidence that the equipment will continue to provide its safety functions during and after a DBE at the end of design life	See Item 1.2 above	See Item 1.2 above
2.5 If an equivalent static analysis model is used in lieu of dynamic analyses, include justification of the adequacy of this approach (e.g., evidence that the structural features of the equipment are relatively simple, symmetric, and have essentially uniform distribution of mass and stiffness)	See Item 1.2 above	See Item 1.2 above
2.6 Description of how the analysis considers 3 orthogonal components of earthquake ground motion (two horizontal and one vertical), and how the responses from the various direction components are combined in accordance with American Society of Civil Engineers (AISC) Standard 4.	See Item 1.2 above	See Item 1.2 above
2.7 Identification of the damping values used in the analyses (e.g., damping values of 2 for massive low-stressed equipment with 0.5 for sloshing modes in liquid-containing metal tanks, or 3 for electrical cabinets and other equipment)	See Item 1.2 above	See Item 1.2 above
2.8 Evidence that connecting structural supports and piping (and the associated dynamic coupling effects) are properly represented in the analytical model	Equipment specification and/or data sheet 24590-WTP-3PS-SS90-T0001 §6.2.3 24590-WTP-3PS-MV00-T0002 §2.2.4 DOE-STD-1020-94 §C.6.1, Items 2 & 3 (page C-58)	See Section 3.5 and3.6.
2.9 Identification of the best estimate of all non-seismic demands expected to occur concurrently with a DBE (in a comparable format to the code allowable values)	See Item 1.2 above	See Item 1.2 above
3 Results/Conclusions		
3.1 Identification of the important natural frequencies of the equipment (or the peak of the design response spectrum must be used)	See Item 1.2 above	See Item 1.2 above
3.2 Identification of the computed elastic seismic response of the equipment (in a comparable format to the code allowable values)	See Item 1.2 above	See Item 1.2 above

	Required Data	Source Reference	Applicable Section of Seismic Qualification Report
3.3	Description of how the analyses address the distribution of resulting seismic-induced inertial forces and evaluation of the load path(s)	See Item 1.2 above	See Item 1.2 above
3.4	Description of method used to combine seismic and non-seismic loads (using code-defined load factors) and to compare the result with code-defined strength or stress levels to confirm the design is adequate	Equipment specification and/or data sheet 24590-WTP-3PS-SS90-T0001 §5 24590-WTP-3PS-MV00-T0002 §2.2.4 DOE-STD-1020-94 §2.3.2 (page 2-12)	See Sections 2.2 and 2.4
3.5	Identification of relative seismic anchor motion (SAM) between equipment and interconnected piping	24590-WTP-3PS-SS90-T0001 §7.4 24590-WTP-3PS-MV00-T0002 §2.2.4 DOE-STD-1020-94 §2.2 (page 2-6) and §2.4.1 (page 2-19)	See Section 2.12
3.6	Identification of reaction loads on connecting structural supports and piping (individual loads as well as load combinations)	24590-WTP-3PS-SS90-T0001 §7.2	See Section 2.3
4	**Quality Assurance**		
4.1	Signature of responsible engineers who performed the calculation	24590-WTP-3PS-MV00-T0002 §2.2.4 NQA-1-1989 DOE-STD-1020-94 §1.4 (page 1-7) and §C.8 (page C-65)	See Pages 1 and 2.
4.2	Signature of engineer(s) who checked the calculation for numerical accuracy, and theory and assumptions	24590-WTP-3PS-MV00-T0002 §2.2.4 NQA-1-1989 Supplement 3S-1 DOE-STD-1020-94 §1.4 (page 1-7) and §C.8 (page C-65)	See Pages 1 and 2.
4.3	Description of theory (analytical method) and assumptions used in the seismic analyses	NQA-1-1989 Supplement 3S-1 24590-WTP-3PS-SS90-T0001 §7.1.2(g)	See Sections 2.2 and 2.3
4.4	Description of computer program(s) used in the analyses, including model(s) used, input values, and output results calculated by the computer program	24590-WTP-3PS-SS90-T0001 §7.1.2(g) 24590-WTP-3PS-MV00-T0002 §2.2.4 NQA-1-1989 Supplement 3S-1 DOE-STD-1020-94 §C.8 (page C-65)	See Appendix A
4.5	Printout of output of computer analyses, including signature of responsible engineer who performed the computer analyses on first page of output	24590-WTP-3PS-MV00-T0002 §2.2.4 NQA-1-1989 Supplement 3S-1 DOE-STD-1020-94 §C.8 (page C-65)	A list of input files is listed in Appendix A. These files will be stored as described in Appendix A.
4.6	Documentation or reference to documentation of verification of computer program accuracy	24590-WTP-3PS-SS90-T0001 §7.1.2(g) 24590-WTP-3PS-MV00-T0002 §2.2.4 NQA-1-1989 Supplement 3S-1 DOE-STD-1020-94 §C.8 (page C-65)	See Reference 35.

Pg V-208

APPENDIX C: SELLER DESIGN VERIFICATION CHECK LIST

22410-6 (09/02/2008) *Page 1 of 2*

AREVA

DESIGN VERIFICATION CHECKLIST

Document No. 51 - 9076787 - 001

Title HEP 1 and HEP 2 Structural Analysis Requirements

1.	Were the inputs correctly selected and incorporated into design or analysis?	☒ Y	☐ N	☐ N/A
2.	Are assumptions necessary to perform the design or analysis activity adequately described and reasonable? Where necessary, are the assumptions identified for subsequent re-verifications when the detailed design activities are completed?	☒ Y	☐ N	☐ N/A
3.	Are the appropriate quality and quality assurance requirements specified? Or, for documents prepared per AREVA NP Inc. procedures, have the procedural requirements been met?	☒ Y	☐ N	☐ N/A
4.	If the design or analysis cites or is required to cite requirements or criteria based upon applicable codes, standards, specific regulatory requirements, including issue and addenda, are these properly identified, and are the requirements/criteria for design or analysis met?	☒ Y	☐ N	☐ N/A
5.	Have applicable construction and operating experience been considered?	☐ Y	☐ N	☒ N/A
6.	Have the design interface requirements been satisfied?	☒ Y	☐ N	☐ N/A
7.	Was an appropriate design or analytical method used?	☒ Y	☐ N	☐ N/A
8.	Is the output reasonable compared to inputs?	☒ Y	☐ N	☐ N/A
9.	Are the specified parts, equipment and processes suitable for the required application?	☐ Y	☐ N	☒ N/A
10.	Are the specified materials compatible with each other and the design environmental conditions to which the material will be exposed?	☐ Y	☐ N	☒ N/A
11.	Have adequate maintenance features and requirements been specified?	☐ Y	☐ N	☒ N/A
12.	Are accessibility and other design provisions adequate for performance of needed maintenance and repair?	☐ Y	☐ N	☒ N/A
13.	Has adequate accessibility been provided to perform the in-service inspection expected to be required during the plant life?	☐ Y	☐ N	☒ N/A
14.	Has the design properly considered radiation exposure to the public and plant personnel?	☐ Y	☐ N	☒ N/A
15.	Are the acceptance criteria incorporated in the design documents sufficient to allow verification that design requirements have been satisfactorily accomplished?	☐ Y	☐ N	☒ N/A
16.	Have adequate preoperational and subsequent periodic test requirements been appropriately specified?	☐ Y	☐ N	☒ N/A
17.	Are adequate handling, storage, cleaning and shipping requirements specified?	☐ Y	☐ N	☒ N/A
18.	Are adequate identification requirements specified?	☐ Y	☐ N	☒ N/A
19.	Is the document prepared and being released under the AREVA NP Inc. Quality Assurance Program? If not, are requirements for record preparation review, approval, retention, etc., adequately specified?	☒ Y	☐ N	☐ N/A

AREVA NP Inc., *an AREVA and Siemens company*

Pg V-211

22410-6 (09/02/2008) *Page 2 of 2*

AREVA

DESIGN VERIFICATION CHECKLIST

Document No. 51-9076787-001

Comments on the preceding responses:

This document is a design methodology document. It outlines numerous steps, procedures, and analytical techniques that will be employed for the HEP1 and HEP2 vessel analyses per the ASME Section VIII - Div. 2 Code. The analyses that were performed for the preparation of this document were primarily to develop FEA analytical techniques. No specific design requirements were required to be met for this document. Also, this document does not contain any HEP1 and HEP2 vessel analyses.

Verified By:	Al Paliulis	Al Paliulis	12/18/08
(First, MI, Last)	Printed / Typed Name	Signature	Date

AREVA NP Inc., *an AREVA and Siemens company*

Pg V-212

APPENDIX D: EXAMPLES OF THE USE OF APPENDIX A PROCEDURES

Pg V-213

EXAMPLES OF THE USE OF APPENDIX A PROCEDURES TO ADJUST OVERLY CONSERVATIVE SHELL ELEMENT STRESS INTENSITY RESULTS AT A VESSEL/NOZZLE INTERSECTION

Figure D-1 is an ANSYS maximum surface stress intensity (SI) plot at a local vessel/nozzle intersection. From Figure D-1, the nozzle elements located between the vessel mean diameter and outside diameter have been unselected from the ANSYS model results. The maximum surface stress intensity for the nozzle at the vessel outside surface is 61.88 ksi, which in this case exceeds the allowable primary + secondary ($P_L + P_b + Q$) SI of 3 x S = 59.88 ksi.

Based on the methods of Appendix A, the nozzle shell element surface stress intensities can be adjusted based on the ratio of the vessel wall to nozzle wall thicknesses. The nozzle wall thickness is 0.96 inch and vessel wall thickness is 1.45 inches. Therefore, the vessel to nozzle wall thickness ratio is 1.51. From Figure A-5 for a vessel to nozzle thickness ratio of 1.51, it is conservatively estimated that the shell element stresses are at least 10% higher than linearized stresses if the FEA model had employed 3D brick elements with a fine mesh density. Therefore, it is conservative to lower the shell element SI by dividing by 1.10.

The adjusted maximum surface stress intensity is 61.88/1.10 = 56.25 ksi < 3 x S = 59.88 ksi

The loading for the above example includes seismic loading, which is not included in evaluating peak SI. However, for this example, it is assumed that the 56.25 ksi value does not include seismic loading effects. The stress multiplier from Figure A-7 is used to factor the ANSYS SI value to obtain the peak SI. From Figure A-7, for a vessel to nozzle wall thickness ratio of 1.51, the stress multiplier is approximately 1.64. The peak vessel SI ($P_L + P_b + Q + F$) for the nozzle at the vessel is:

1.64 x 61.88 = 101.5 ksi

The above calculations adjust stress intensities in a nozzle to values that conservatively represent solid brick element results. The same method applies to adjusting ANSYS shell element stress intensities in the vessel to equivalent brick element linearized SI, except Figure A-4 would be used instead of Figures A-5. From Figure A-4, the reduction factor to derive the linearized vessel surface SI ($P_L + P_b + Q$) is 1.29 for a thickness ratio of 1.51. From Figure D-2, the maximum SI is 40.65 in the vessel (all nozzle elements unselected, no vessel elements unselected). Therefore, the maximum vessel SI of 40.65 ksi is reduced:

40.65 / 1.29 = 31.51 ksi

The 31.51 ksi value would then be compared to the allowable linearized SI of 3S.

As above, it is assumed for this example that no seismic loads are included for the loading condition of Figure D-2. The stress multiplier from Figure A-6 is used to factor the ANSYS shell element surface SI value to obtain the peak SI. From Figure A-6, for a vessel to nozzle wall thickness ratio of 1.51, the stress multiplier is approximately 1.45. The peak vessel SI ($P_L + P_b + Q + F$) for the vessel at the nozzle is:

1.45 x 40.65 = 58.94 ksi

Figure D-1: Example for Determining Linearized and Peak SI for a Nozzle at the Vessel Intersection

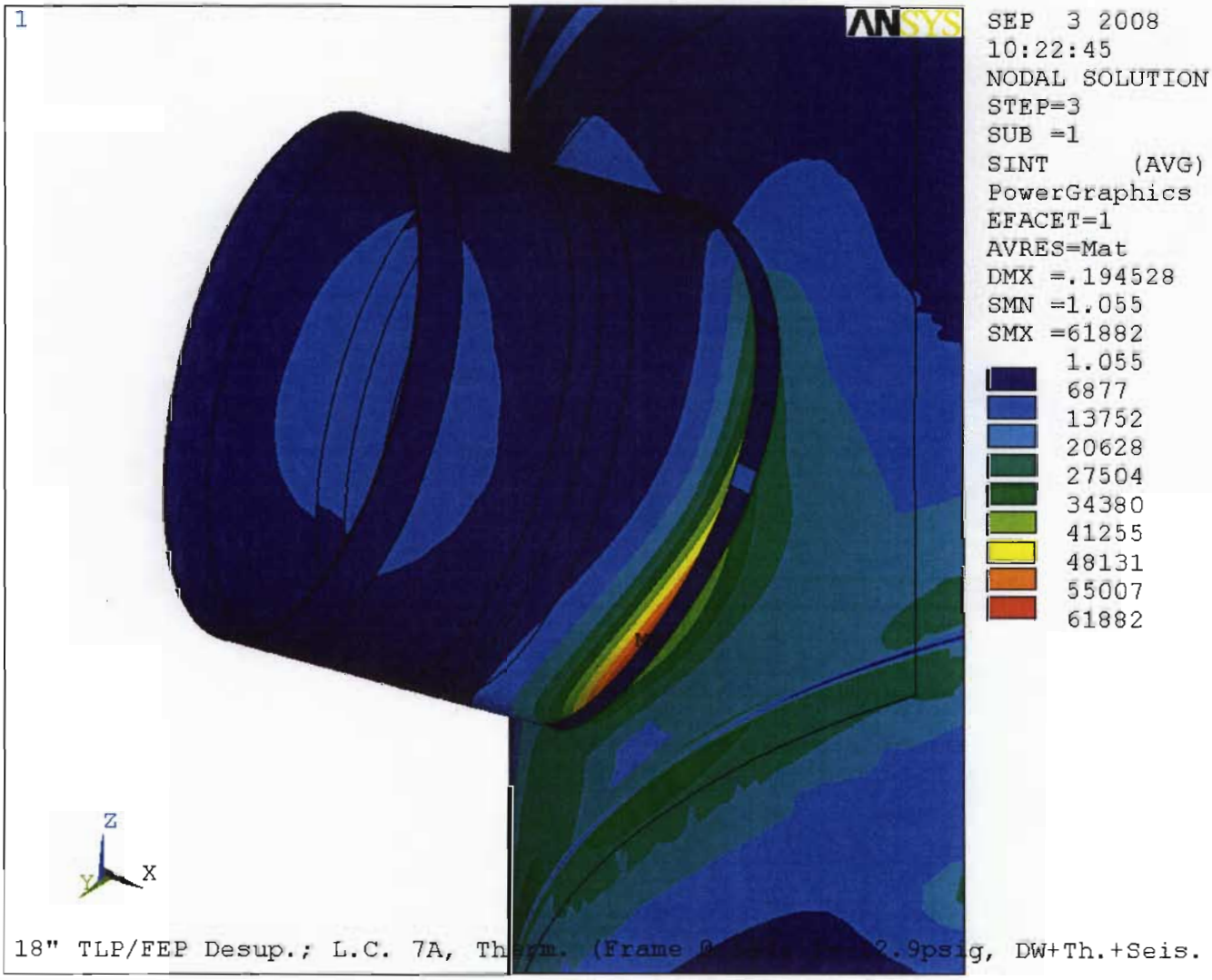

Pg V-215

Figure D-2: Example for Determining Linearized and Peak SI for a Vessel at the Nozzle Intersection

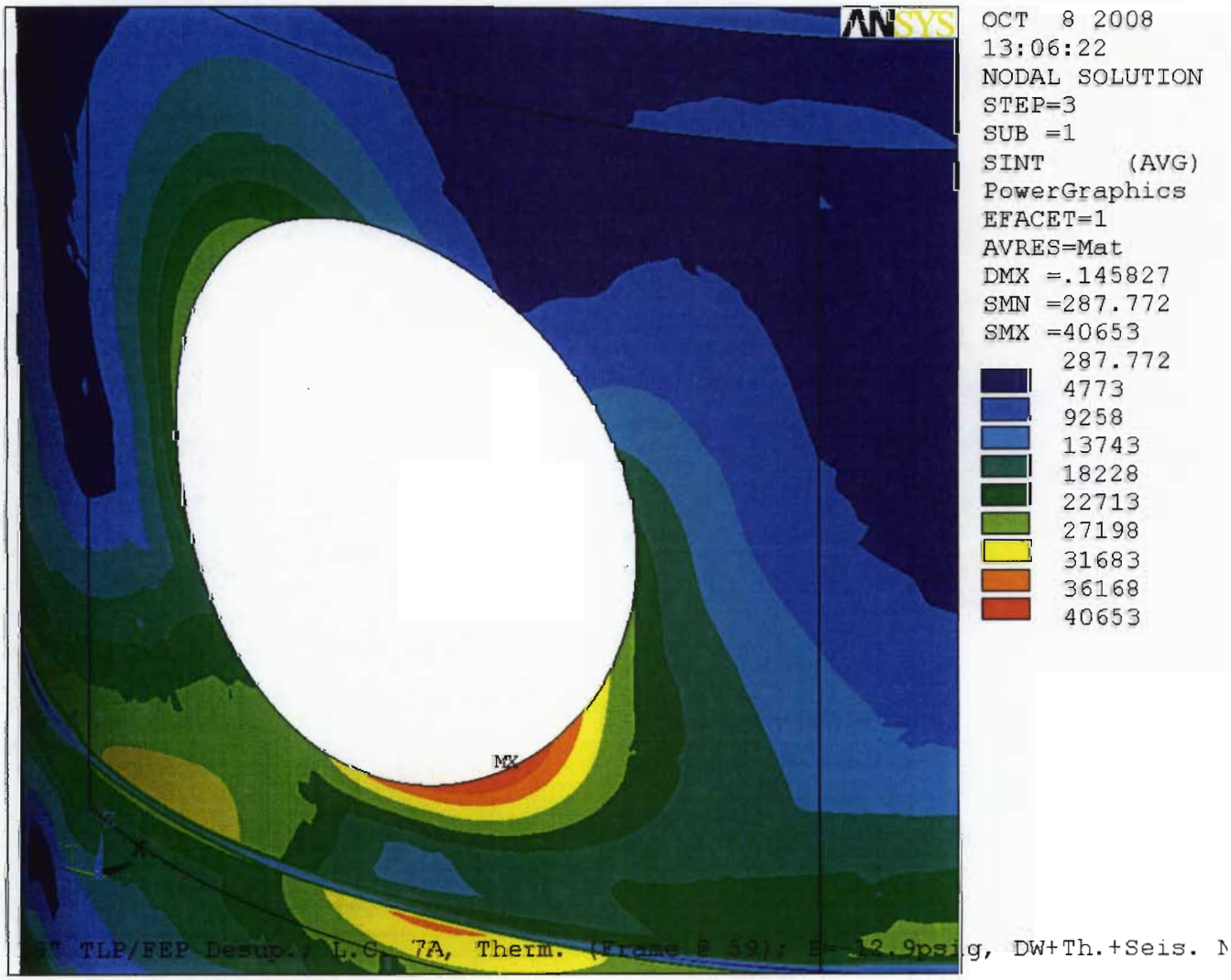

ATTACHMENT #8

Maximum Allowable Skid Foot Print for FEP and TLP Condensers

Note: Sketches provided on the next pages show the maximum allowable skid footprint for FEP and TLP condensers. Embed locations can be moved according the need for the condenser skids, The slabs are not scheduled to be poured till after 1/1/2011 for 56 ft and 77 ft elevations.

24590-PTF-3PS-MEVV-T000
Rev. 3

Pg V-217

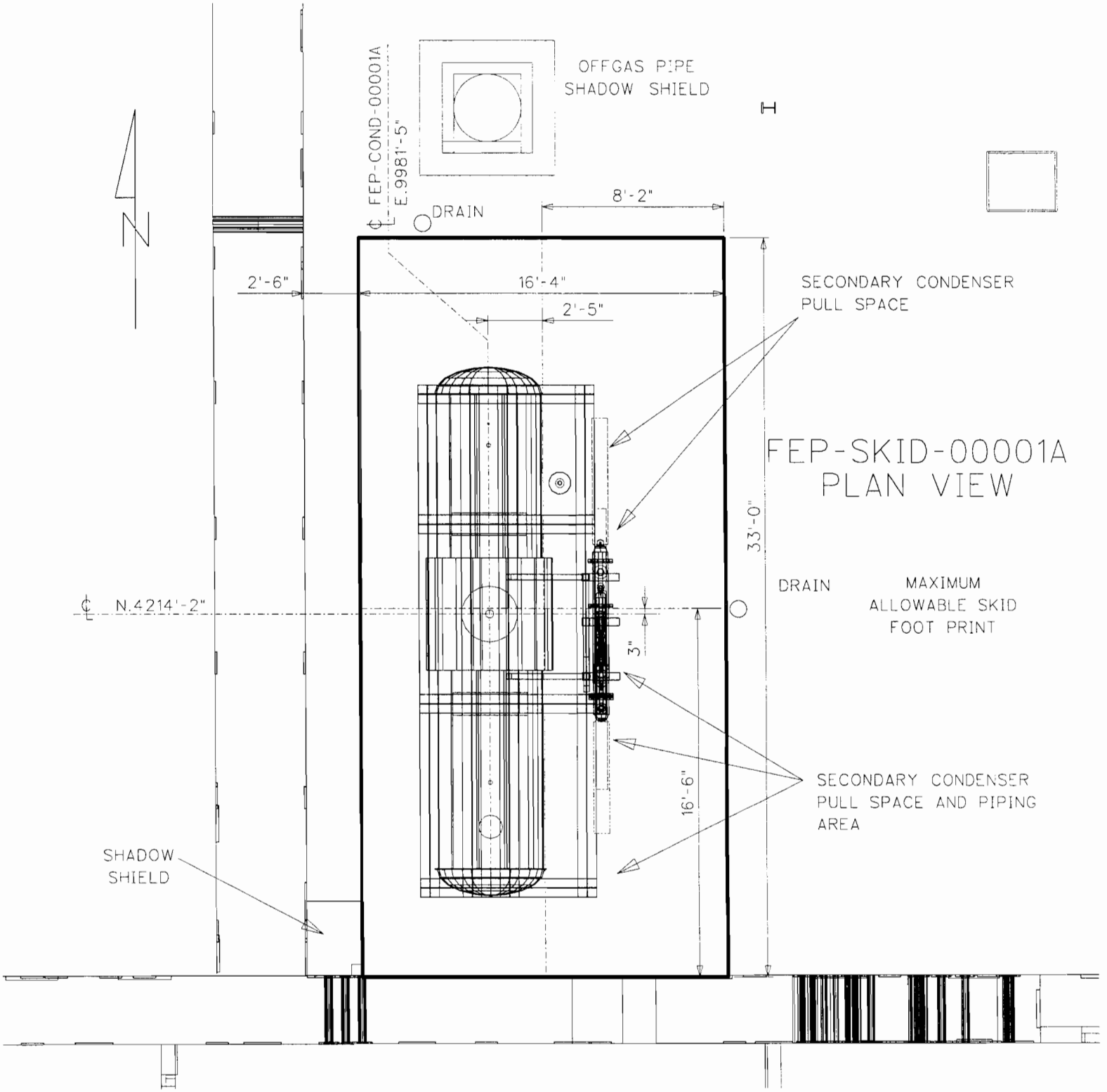

24590-PTF-3PS-MEVV-T0001 Rev. 3

Pg V-218

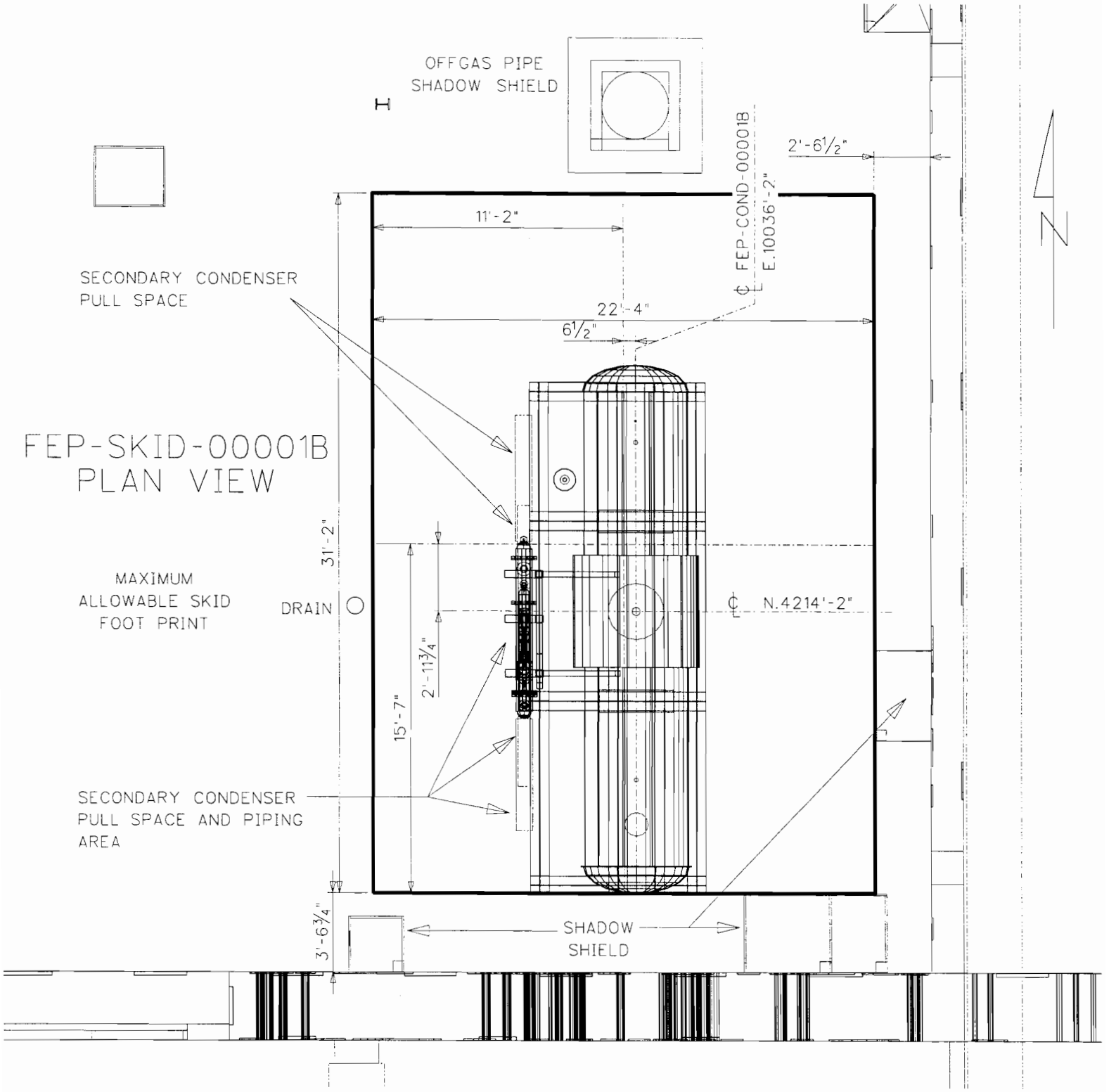

24590-PTF-3PS-MEW-T0001, Rev. 3

Pg V-219

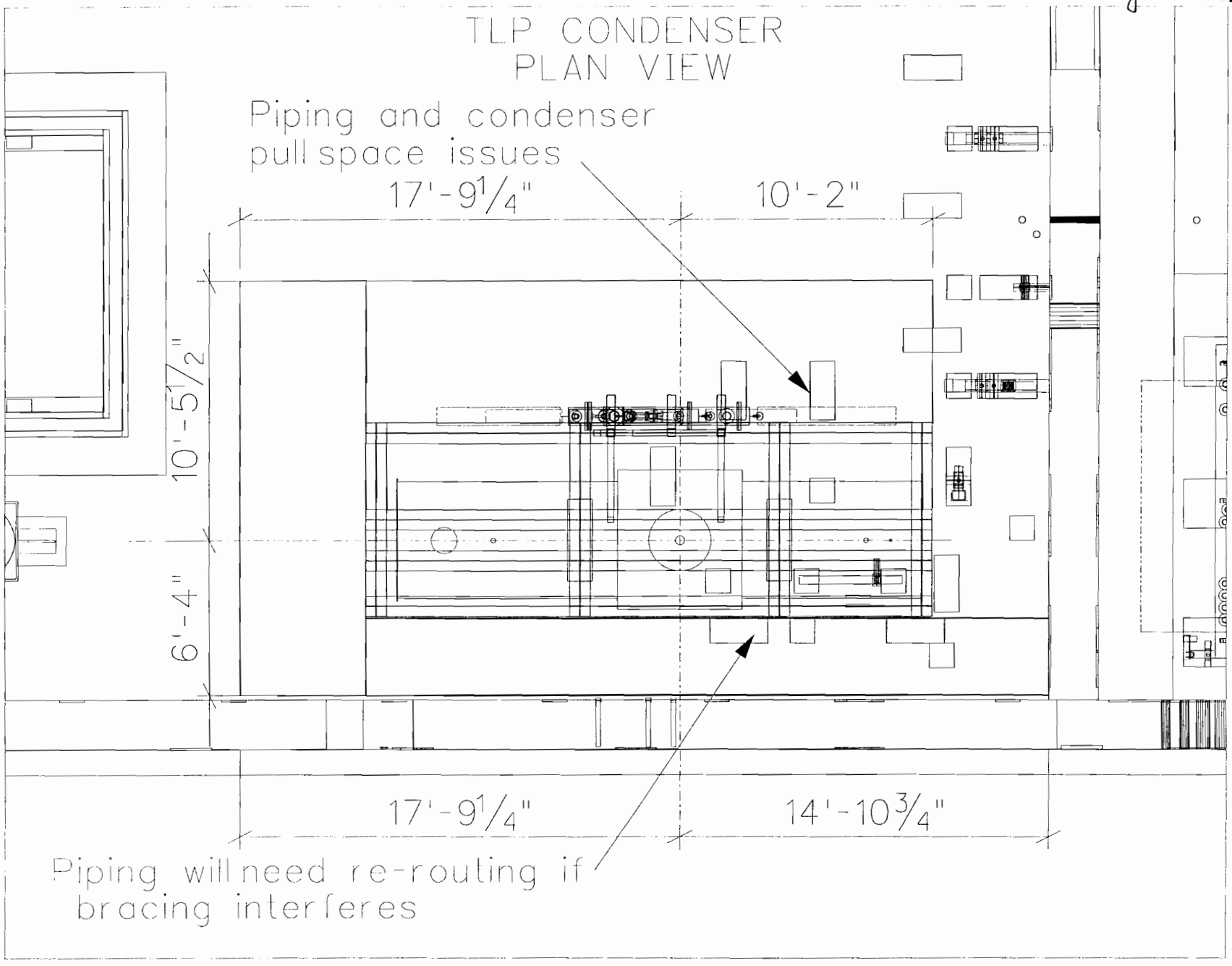

ATTACHMENT #9

Reboiler Nozzle Loads

Reboiler Small Bore Supports Loads and Layout

Tables provided in this attachment are updated all nozzle loads and also support loads layout for the small bore piping of reboilers. Seller shall use these nozzle load and support load value as specified in this attachment instead of the values shown in the table in Appendix A of the Pressure Vessel Design and Fabrication Specification 24590-WTP-3PS-MV00-T0001. The thermal reduction factor found in 24590-WTP-3PS-MV00-T0001, Section 3.7.4 shall not be applied. In addition, Seller shall not apply the inelastic energy absorption coefficient (F_u) greater than 1.0 to these provided nozzle load and support load values.

The provided sketches show the proposed/preliminary small bore piping routing, support directions, and support locations. Seller shall coordinate with the Buyer to finalize all reboiler nozzle locations. Note that the nozzle loads are reported at the vessel shell. Seller is advised that the existing Buyer's P&IDs do not necessarily reflect the proposed small bore pipe routing of the reboiler. Seller shall confirm with their fabricator if the reboiler nozzle N05 modification is physically possible (i.e no space limitation issue) to add a 2"x1" concentric reducer at the vessel to help with potential vessel stress issue prior to proceed with seismic reanalysis.

Please be advised that these new locations are tight and extreme care will be need to be taken not to damage the small bore piping when removing the reboilers from the up-ender skids. Please note that original steam vent routing and nozzle locations would have posed potential interferences when installed on the up-ender skid. The drain lines need to exit the bottom of the vessel vertically, the PUREX kick-off plates are lower than the bottom of the reboiler base plates. Seller shall rise FEP/TLP reboiler drain nozzle elevation by at least 1.5 inches in order to make any modification to the kick-off plates or connectors unnecessary. Seller needs to pay particularly close attention to items like new nozzle locations, pipe routing, the feasibility of the support directions and locations, potential up-ender interferences and the vulnerability of these small bore lines.

Proposed Nozzle Loads for FEP and TLP Reboiler Small Bore Piping

FEP (AREA 26 & 27)

		Fx	Fy	Fz	Mx	My	Mz
N04 (4" PIPE)	WT01	80	420	40	260	50	1180
	THRM01	830	70	220	380	230	1430
	SEISDB	360	240	230	630	870	1020
N05 (1" PIPE) *	WT01	40	40	30	50	50	40
*Changed to 2"x1" Concentric	THRM01	50	20	30	30	80	30
nozzle from 1" nozzle	SEISDB	90	50	60	80	150	40
N06 (2" PIPE)	WT01	30	80	30	60	40	60
	THRM01	70	70	70	110	100	160
	SEISDB	110	140	210	570	160	320
N07 (3" PIPE) *	WT01	50	340	30	230	40	530
*Changed to 3" pipe from	THRM01	860	170	340	410	110	850
2" pipe	SEISDB	420	200	220	360	600	780
N08 (2" PIPE)	WT01	30	100	30	60	40	60
	THRM01	100	180	100	150	180	250
	SEISDB	150	130	150	500	500	250
N09 (2" PIPE)	WT01	30	100	30	60	40	60
	THRM01	100	180	100	150	180	250
	SEISDB	150	130	150	500	500	250

TLP (AREA 17)

		Fx	Fy	Fz	Mx	My	Mz
N04 (4" PIPE)	WT01	30	540	40	1150	60	380
	THRM01	370	50	70	140	810	710
	SEISDB	420	410	310	1520	1060	910
N05 (1" PIPE) *	WT01	40	30	30	30	30	30
*Changed to 2"x1" Concentric	THRM01	120	130	40	100	120	90
nozzle from 1" nozzle	SEISDB	310	60	100	30	290	80
N06 (2" PIPE)	WT01	40	60	30	40	30	30
	THRM01	30	200	60	60	70	120
	SEISDB	70	100	50	90	120	100
N07 (3" PIPE) *	WT01	50	230	30	40	30	290
*Changed to 3" pipe from	THRM01	210	50	30	40	70	160
2" pipe	SEISDB	180	110	120	130	160	280
N08 (2" PIPE)	WT01	30	100	30	60	40	60
	THRM01	100	180	100	150	180	250
	SEISDB	150	130	150	500	500	250

N09 (2" PIPE)	WT01	30	100	30	60	40	60
	THRM01	100	180	100	150	180	250
	SEISDB	150	130	150	500	500	250

Global Coordinate System
North = X
East = Z
Elevation = Y

PTF
Reboilers

Nozzle Number	Nozzle Size (in)	Equipment ID	Orient	Load Case	Design Loads (Force in lbs, Moment in ft-lb)					
					Fx	Fy	Fz	Mx	My	Mz
N03	18	FEP-RBLR-00001A	H	Weight	500	5000	500	3000	3000	8900
				Seismic	2500	2500	2500	9100	4000	8500
				Thermal	5200	2500	2500	4000	4000	19700
N03	18	FEP-RBLR-00001B	H	Weight	500	5000	500	3000	3000	7700
				Seismic	2500	2500	2500	11700	4000	8600
				Thermal	4600	2500	2500	4000	4300	14100
N03	18	TLP-RBLR-00001	H	Weight	500	5000	500	3000	3000	8100
				Seismic	3100	2600	3700	19300	4000	7600
				Thermal	2500	4600	2500	9100	4200	13000

NOTES:
- Load direction per 24590-WTP-3PS-MV000-T0001, APPENDIX A.
- Tabulated loads are from ME101 analyses results with 20% increase factor for design purposes.
- Seismic loads considered with RGM ISRS, 5% damping and Modal Sum by CQC. Applied $F\mu$ is 1.5

* Ref. CCN 177032

Proposed Support Loads for FEP and TLP Reboiler Small Bore Piping

		FORCED (LBS)		
		Fx	Fy	Fz
TLP SUPPORT 01	WEIGHT	30	150	-
	THERMAL	130	30	-
	SEISMIC	550	130	-
TLP SUPPORT 02	WEIGHT	-	350	40
	THERMAL	-	100	50
	SEISMIC	-	220	250
TLP SUPPORT 03	WEIGHT	-	350	40
	THERMAL	-	100	50
	SEISMIC	-	220	250
FEP SUPPORT 01	WEIGHT	150	190	50
	THERMAL	120	30	60
	SEISMIC	390	140	150
FEP SUPPORT 02	WEIGHT	-	150	30
	THERMAL	-	60	70
	SEISMIC	-	250	260
FEP SUPPORT 03	WEIGHT	-	350	40
	THERMAL	-	100	50
	SEISMIC	-	220	250
FEP SUPPORT 04	WEIGHT	-	350	40
	THERMAL	-	100	50
	SEISMIC	-	220	250
Global Coordinate System				
North = X				
East = Z				
Elevation = Y				

24590-PTF-3PS-MEVV-T0001, Rev. 3

Pg V-225

PROPOSED SMALL BORE PIPING LAYOUT
FEP-RBLR-00001A
FEP-RBLR-00001B

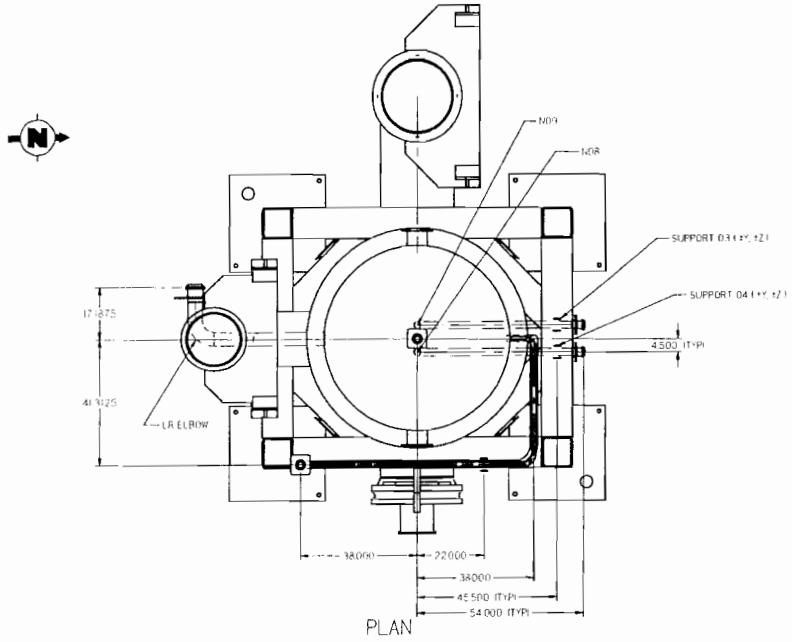

PLAN

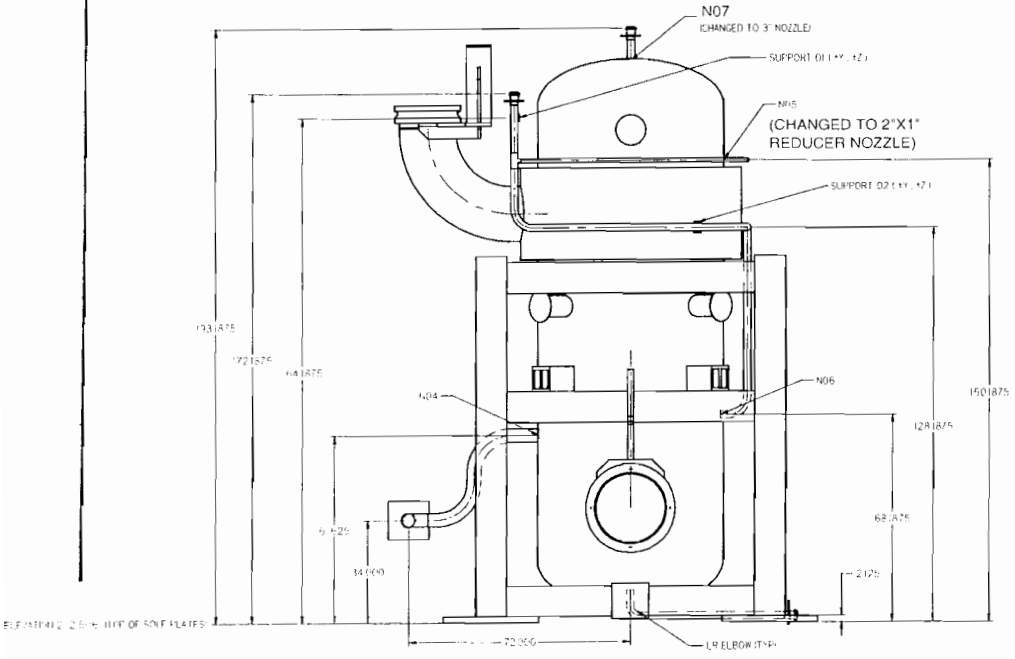

ELEVATION (LOOKING WEST)

NOTES

1) ALL SMALL BORE PIPING WILL HAVE A 3D BEND RADIUS UNLESS OTHERWISE NOTED.
2) PUREX NOZZLES ARE DIMENSIONED FROM THE NOZZLE CRITICAL POINT.
3) RESTRAINT COORDINATE SYSTEM:
   NORTH: X
   ELEVATION: Y
   EAST: Z

24590-PTF-3PS-MEVV-T0001, Rev. 3

Pg V-226

PROPOSED SMALL BORE PIPING LAYOUT
TLP-RBLR-00001

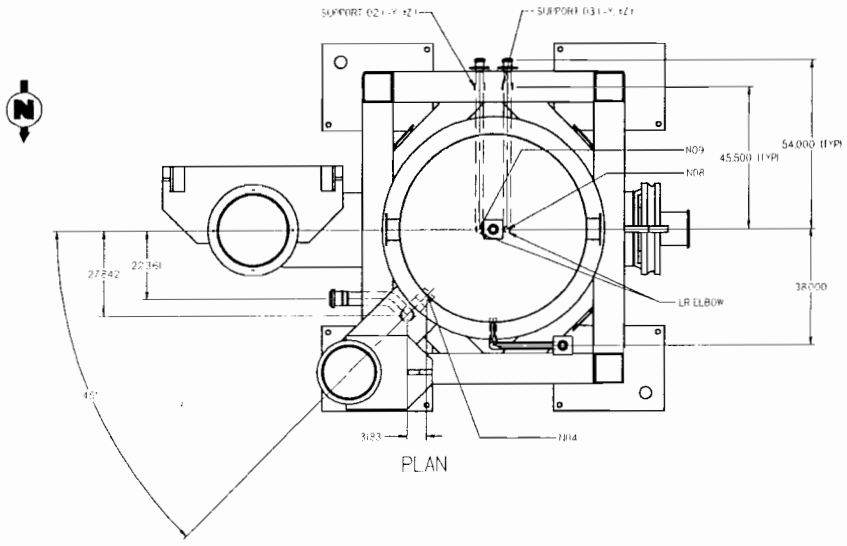

PLAN

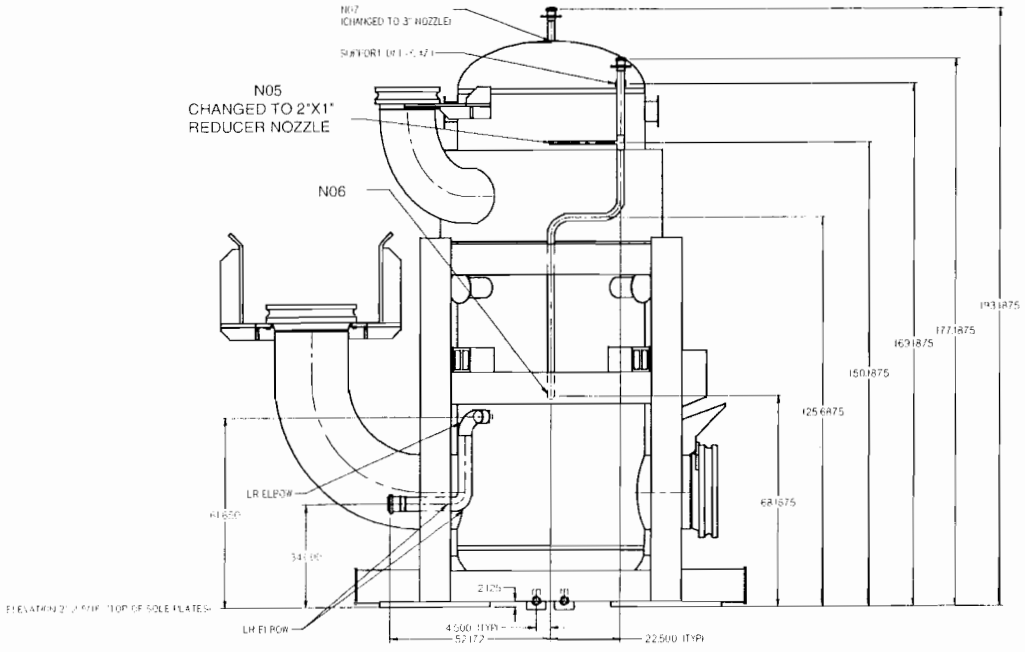

ELEVATION (LOOKING SOUTH)

NOTES:

1) ALL SMALL BORE PIPING WILL HAVE A 3D BEND RADIUS UNLESS OTHERWISE NOTED.
2) PUREX NOZZLES ARE DIMENSIONED FROM THE NOZZLE CRITICAL POINT.
3) RESTRAINT COORDINATE SYSTEM
   NORTH: X
   ELEVATION: Y
   EAST: Z

ATTACHMENT #10

Design Inputs for Pressure and Temperature for
Buyer Piping nozzles (Internal Piping and Utility Inlet Nozzles)
to be used in Seller's Vessel Analysis.

24590-PTF-3PS-MEVV-T0001 Rev. 3

Pg V-228

FEP-SEP-00001A/1B & TLP-SEP-00001

		Temp (F)		Pressure (PSI)	
Nozzle #	**Type**	**Design**	**Max**	**Design**	**Max**
N17	PC	175	115	125	125
N14	PC	175	115	125	125
N05**	Purge Air	175	150	50	50
N19*	Antifoam	125	110	185	185
N13	PC cycle	175	150	50	50
N27	Air	175	150	50	-14.7 / 0
N28	Air	175	150	50	-14.7 / 0
N01	Air	175	150	50	-14.7 / 0
N02	Air	175	150	50	-14.7 / 0
N03	Air	175	150	50	-14.7 / 0
N07	Temp	175	150	50	-14.7 / 0
N21	Air	175	150	50	-14.7 / 0
N08	Air	175	150	50	-14.7 / 0
N09	Air	175	150	50	-14.7 / 0
N22	Air	175	150	50	-14.7 / 0
N23	Air	175	150	50	-14.7 / 0
N24	Air	175	150	50	-14.7 / 0
N25	Air	175	150	50	-14.7 / 0
N10	Process	175	150	50	-14.7 / 0
N11	Process	175	150	50	-14.7 / 0
N04	Vapor	175	150	50	-14.7 / 0

* Nozzle N19A for TLP-SEP-00001

** No nozzle N05 on TLP-SEP-00001 so it does not apply

FEP-RBLR-00001A/1B		Temp (F)		Pressure (PSI)	
Nozzle #	**Type**	**Design**	**Max Op**	**Design**	**Max Op**
N03	Steam	275	250	50	-14.7 / 0
N05	Vent	275	250	50	-14.7 / 0
N06	Vent	275	250	50	-14.7 / 0
N04	Water	275	250	50	-14.7 / 0
N01	Process	175	150	50	-14.7 / 0
N02	Process	175	150	50	-14.7 / 0

NOTE: Seller can use their equipment design ratings for design/max operatings if their design values will provide more conservative design.

24590-PTF-3PS-MEW-T0001 Rev. 3
Pg V-229

FEP-COND-00001A/1B		Temp (F)		Pressure (PSI)	
Nozzle #	**Type**	**Design**	**Max**	**Design**	**Max**
N01	Vapor	175	150	50	-14.7 / 0
N07	Tube Vent	125	110	100	95
N05	Water	125	110	100	95
N04	Water	110	85	100	95
N08	Tube Drain	125	110	100	95
N02	Condensate	175	150	50	-14.7 / 0
N03	Vent	175	150	50	-14.7 / 0
N06	Vent	175	150	50	-14.7 / 0

FEP-COND-00002A/2B		Temp (F)		Pressure (PSI)	
Nozzle #	**Type**	**Design**	**Max**	**Design**	**Max**
N01	Steam	378	226	50	-14.7 / 0
N07	Water	125	110	100	95
N05	Water	125	110	100	95
N04	Water	110	85	100	95
N08	Water	125	110	100	95
N02	Process Cond	175	150	50	-14.7 / 0
N03	Vent	175	90	100	-14.7 / 0
N06	Steam Vapor	275	250	50	-14.7 / 0

FEP-COND-00003A/3A		Temp (F)		Pressure (PSI)	
Nozzle #	**Type**	**Design**	**Max**	**Design**	**Max**
N01	Steam	378	249	50	-14.7 / 0
N07	Water	125	110	100	95
N05	Water	125	110	100	95
N04	Water	110	85	100	95
N08	Water	125	110	100	95
N02	Process Cond	175	150	50	-14.7 / 0
N03	Vent	200	120	100	-14.7 / 0

* Seller can use their equipment design ratings for design/max operatings if their design values will provide more conservative design.

ATTACHMENT #11

Modification requirements to
TLP Reboiler Frame and Sole Plates

45

Added (8/30/07)

REBOILER SUPPORT FRAME CLARIFICATION (TLP)

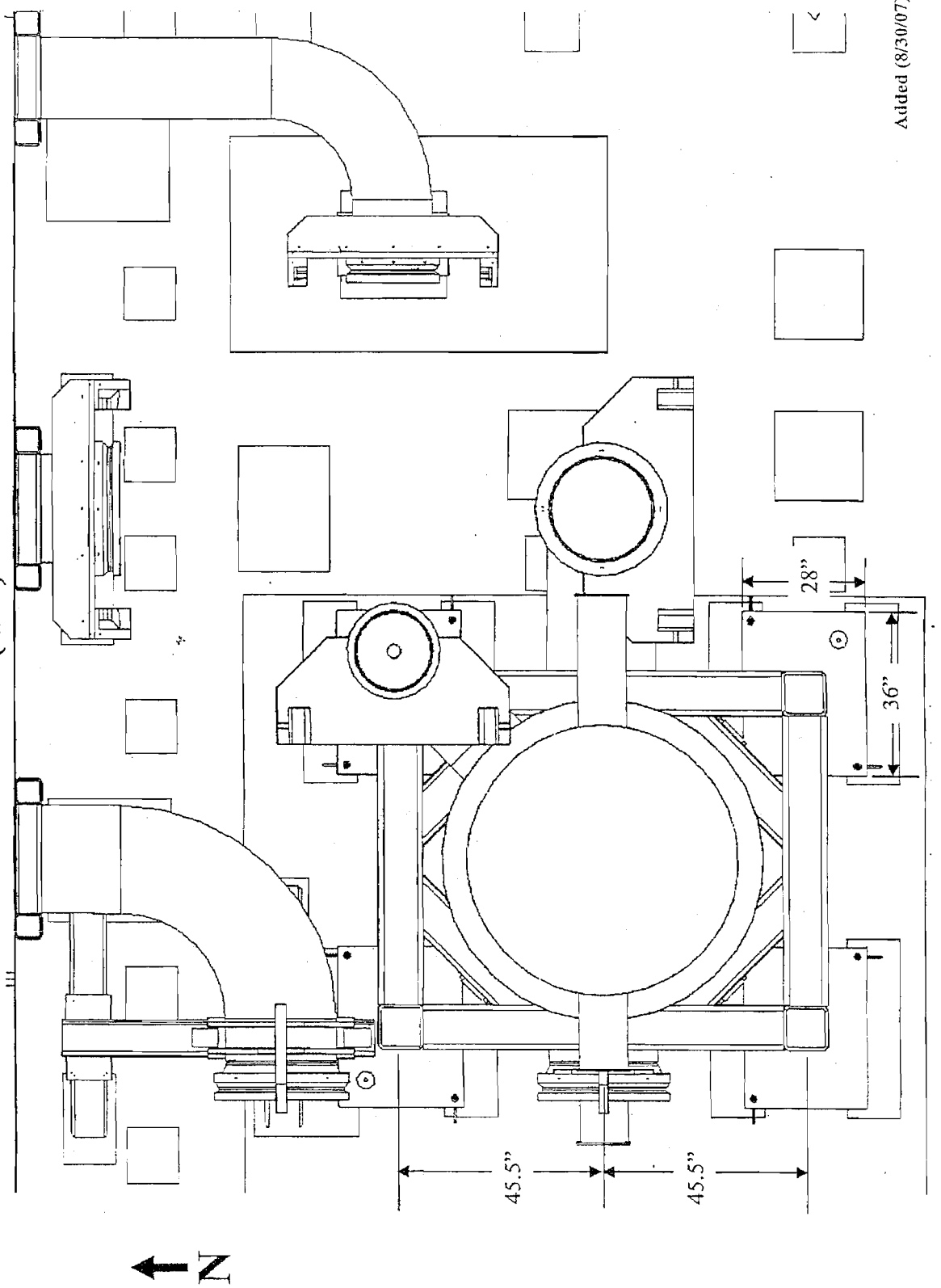

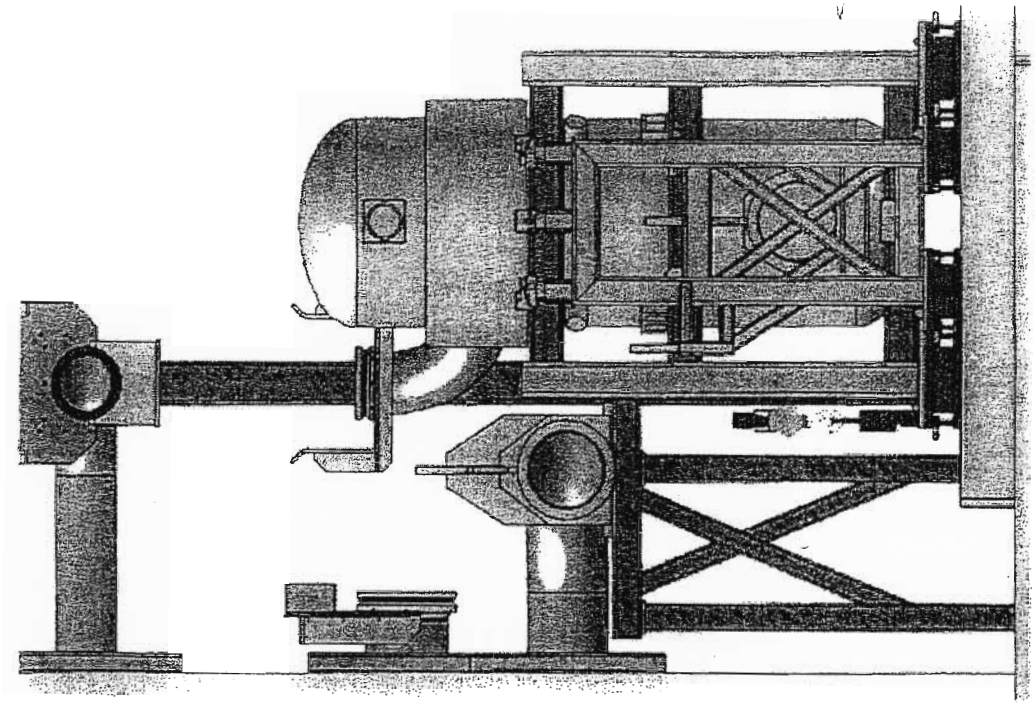

Added (8/30/07) 46

TLP

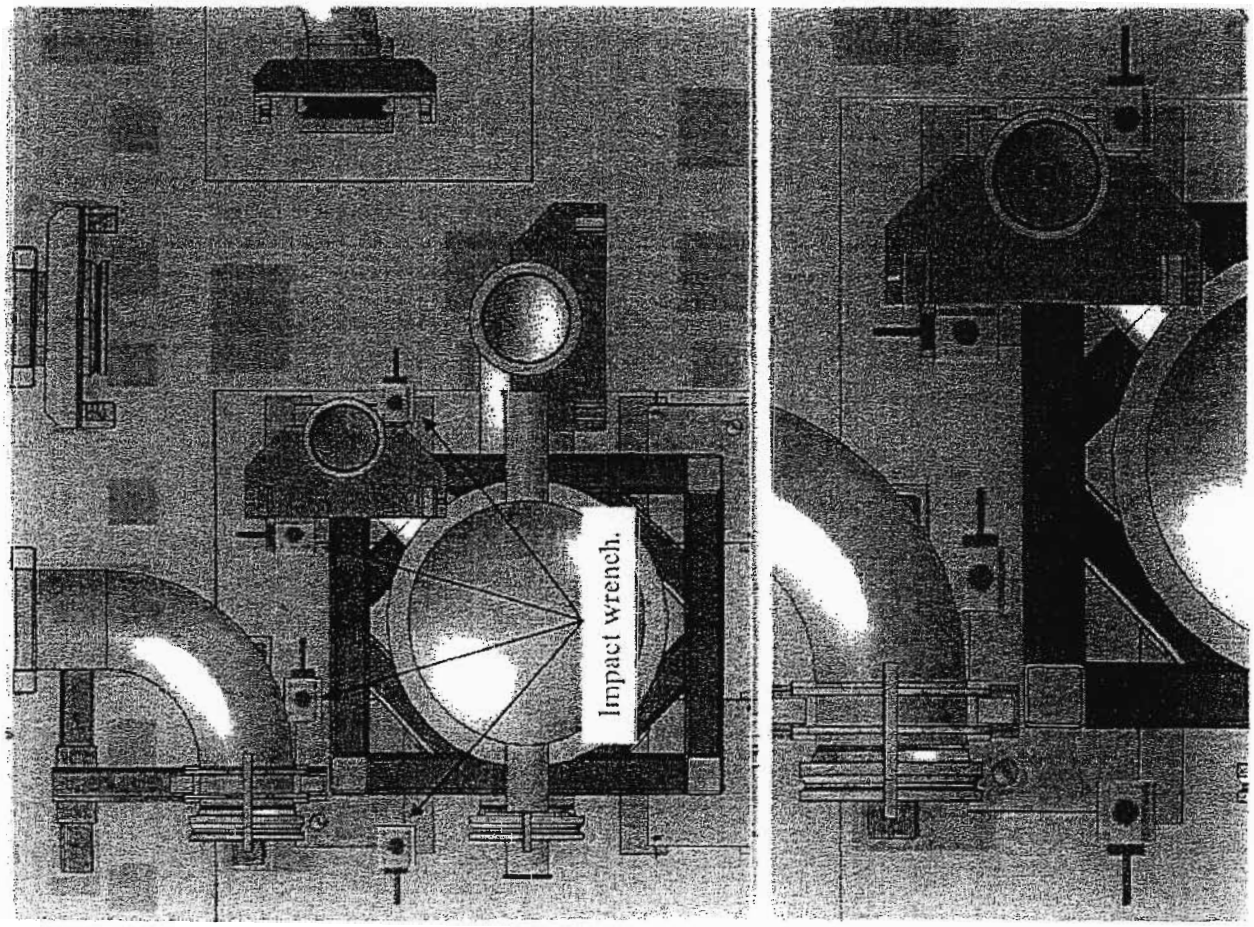

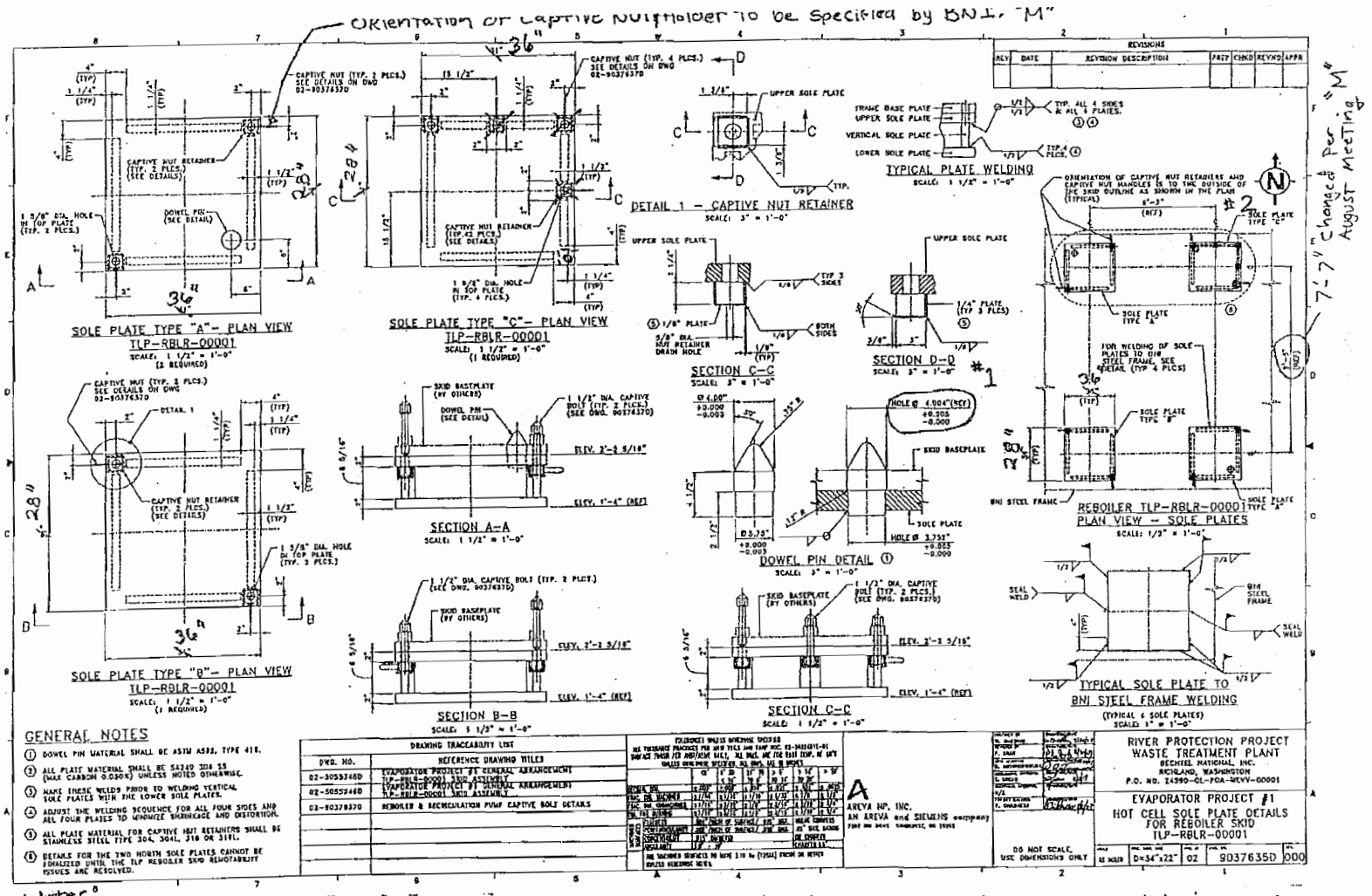

Notes

"M" #1. Hole for skid Base plate is called out @ 4.004" and on drawing # 9043526D skid Base plate Hole is called out to be 4.030".

"M" #2. Change hole pattern to only 2 Captive Bolts, location is one in North west and one in South east.

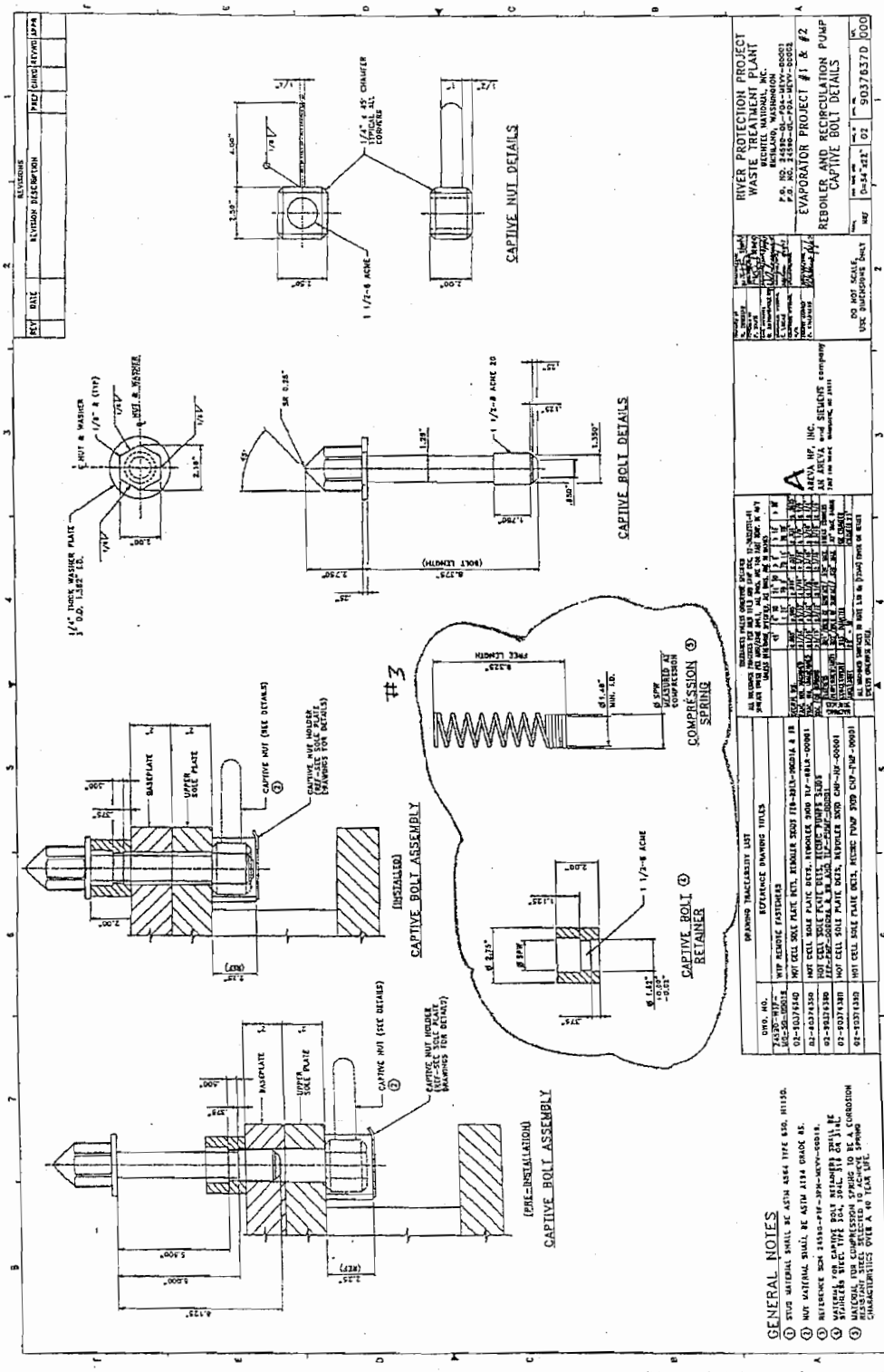

"M" # 3. Spring Needs To be defined.

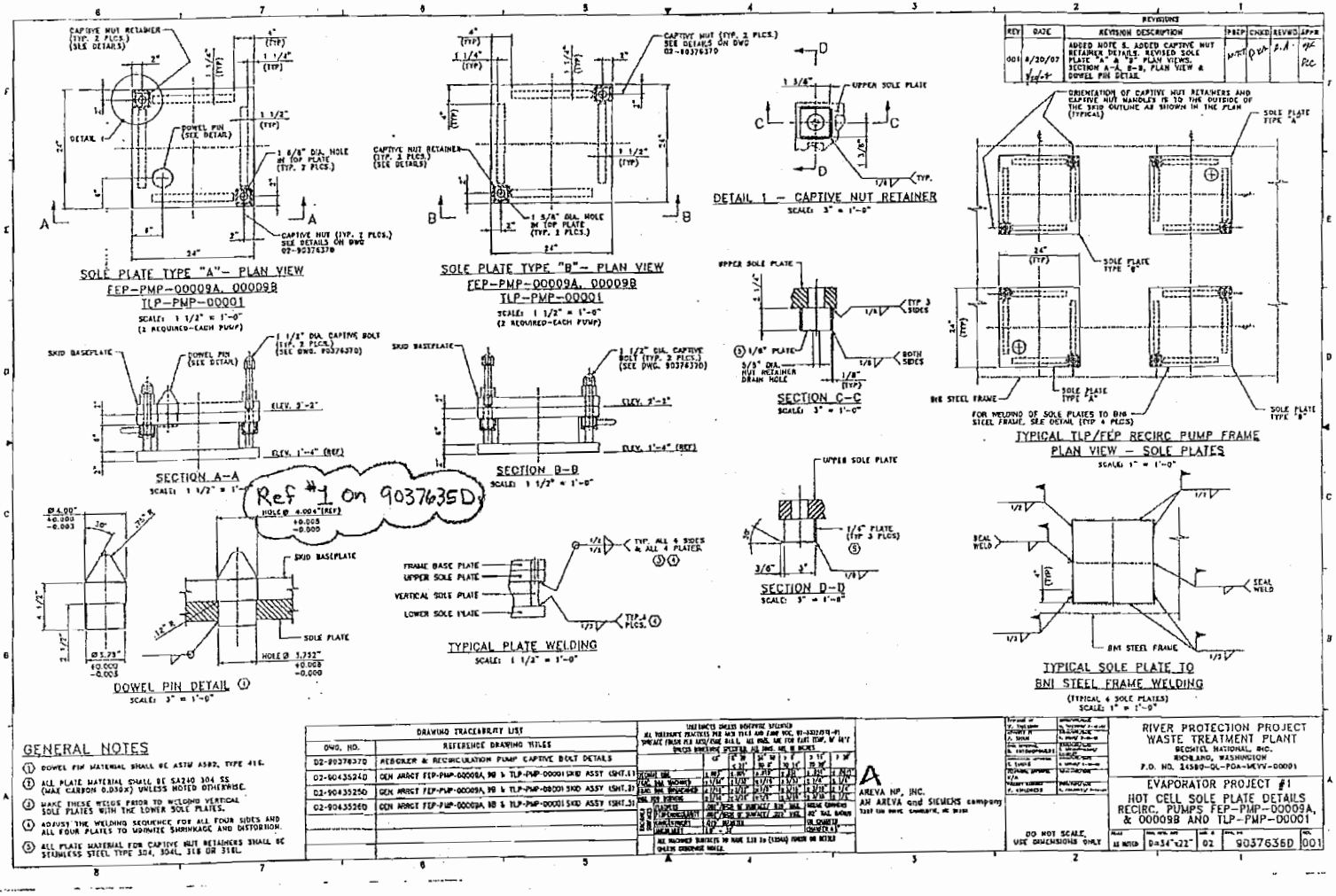

REV	DATE	REVISION DESCRIPTION	PREP	CHKD	REVWD	APPR
001	8/20/07	ADDED NOTE 5. ADDED CAPTIVE NUT RETAINER DETAILS. REVISED SOLE PLATE "A" & "B" PLAN VIEWS. SECTION A–A, B–B, PLAN VIEW & DOWEL PIN DETAIL.				

GENERAL NOTES

1. DOWEL PIN MATERIAL SHALL BE ASTM A582, TYPE 416.
2. ALL PLATE MATERIAL SHALL BE SA240 304 SS (MAX CARBON 0.030%) UNLESS NOTED OTHERWISE.
3. MAKE THESE WELDS PRIOR TO WELDING VERTICAL SOLE PLATES WITH THE LOWER SOLE PLATES.
4. ADJUST THE WELDING SEQUENCE FOR ALL FOUR SIDES AND ALL FOUR PLATES TO MINIMIZE SHRINKAGE AND DISTORTION.
5. ALL PLATE MATERIAL FOR CAPTIVE NUT RETAINERS SHALL BE STAINLESS STEEL TYPE 304, 304L, 316 OR 316L.

DRAWING TRACEABILITY LIST	
DWG. NO.	REFERENCE DRAWING TITLES
02-90376370	REBOILER & RECIRCULATION PUMP CAPTIVE BOLT DETAILS
02-90435240	GEN ARRGT FEP-PMP-00009A, 9B & TLP-PMP-00001 SKID ASSY (SHT.1)
02-90435250	GEN ARRGT FEP-PMP-00009A, 9B & TLP-PMP-00001 SKID ASSY (SHT.2)
02-90435260	GEN ARRGT FEP-PMP-00009A, 9B & TLP-PMP-00001 SKID ASSY (SHT.3)

A
AREVA NP, INC.
AN AREVA and SIEMENS company
7207 THE MALL CONCOURSE, MD 21046

RIVER PROTECTION PROJECT
WASTE TREATMENT PLANT
BECHTEL NATIONAL, INC.
RICHLAND, WASHINGTON
P.O. NO. 24590-QL-POA-MEVV-00001

EVAPORATOR PROJECT #1
HOT CELL SOLE PLATE DETAILS
RECIRC. PUMPS FEP–PMP–00009A, & 00009B AND TLP–PMP–00001

DO NOT SCALE, USE DIMENSIONS ONLY

SIZE D | SCALE AS NOTED | 34"x22" | 02 | 9037636D | 001

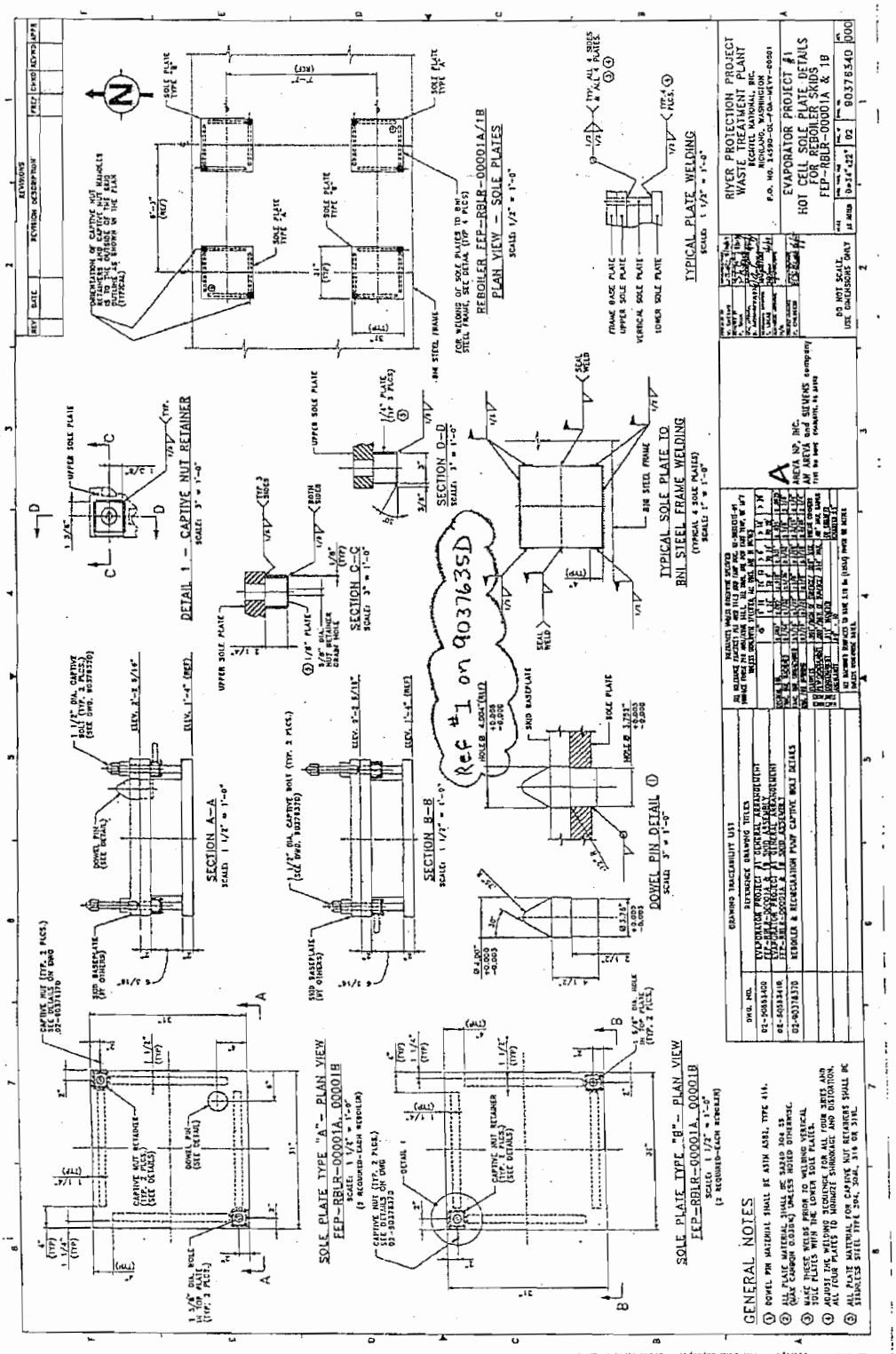
REBOILER FEP-RBLR-00001A/1B
PLAN VIEW - SOLE PLATES
TYPICAL PLATE WELDING
DETAIL 1 - CAPTIVE NUT RETAINER
SECTION A-A
SECTION B-B
SECTION C-C
SECTION D-D
TYPICAL SOLE PLATE TO RNI STEEL FRAME WELDING
DOWEL PIN DETAIL 1
SOLE PLATE TYPE "A" - PLAN VIEW FEP-RBLR-00001A, 00001B
SOLE PLATE TYPE "B" - PLAN VIEW FEP-RBLR-00001A, 00001B
GENERAL NOTES
RIVER PROTECTION PROJECT WASTE TREATMENT PLANT
EVAPORATOR PROJECT #1
HOT CELL SOLE PLATE DETAILS FOR REBOILER SKIDS FEP-RBLR-00001A & 1B
90376540
Ref #1 on 9037635D

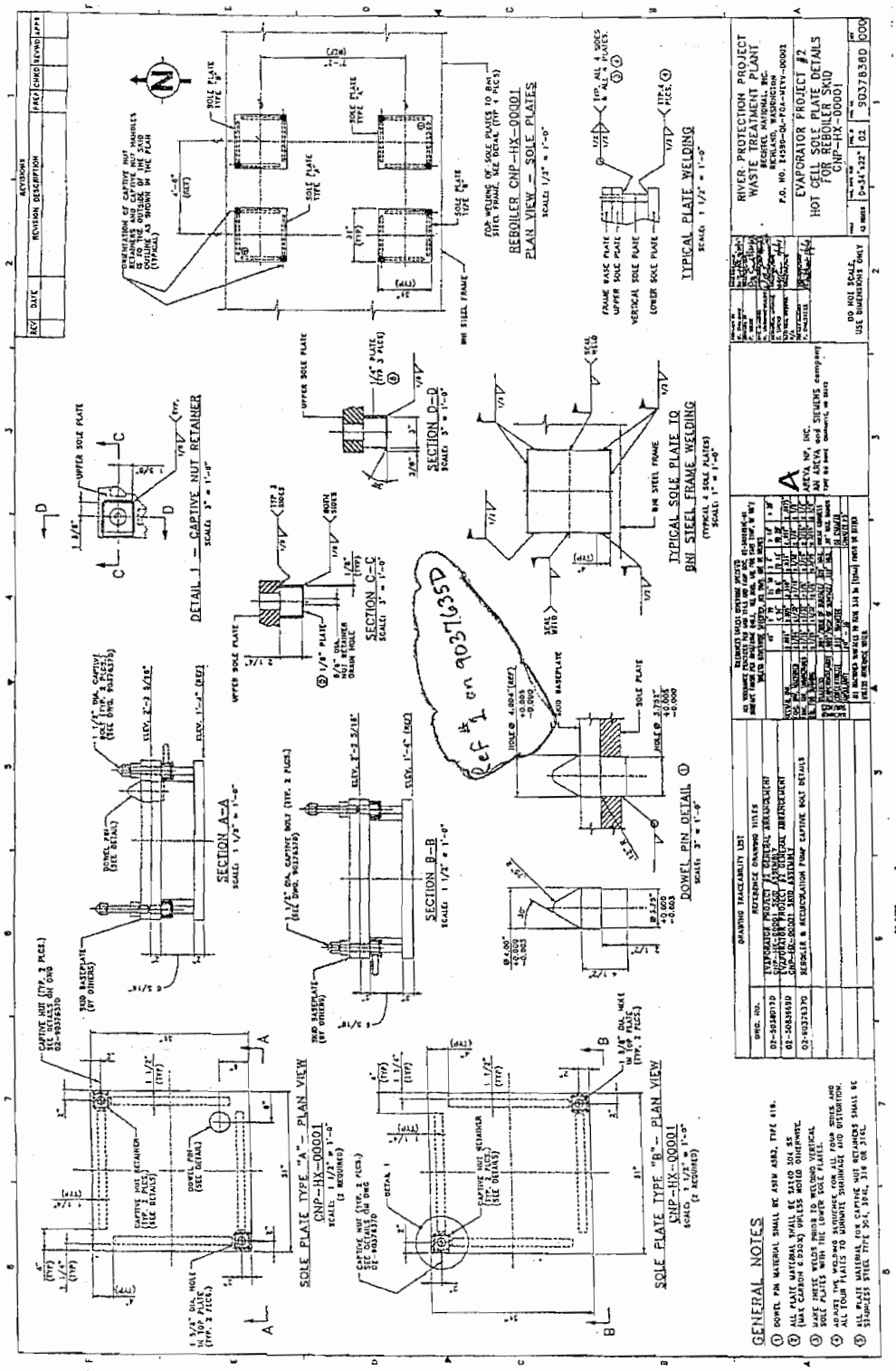
REBOILER CNP-HX-00001
PLAN VIEW – SOLE PLATES
TYPICAL PLATE WELDING
TYPICAL SOLE PLATE TO BHI STEEL FRAME WELDING
DETAIL 1 – CAPTIVE NUT RETAINER
SECTION D–D
SECTION C–C
SECTION A–A
SECTION B–B
DOWEL PIN DETAIL
SOLE PLATE TYPE "A" – PLAN VIEW CNP-HX-00001
SOLE PLATE TYPE "B" – PLAN VIEW CNP-HX-00001
GENERAL NOTES
RIVER PROTECTION PROJECT WASTE TREATMENT PLANT
EVAPORATOR PROJECT #2
HOT CELL SOLE PLATE DETAILS FOR REBOILER SKID CNP-HX-00001
DO NOT SCALE, USE DIMENSIONS ONLY
Ref # 1 on 90378360

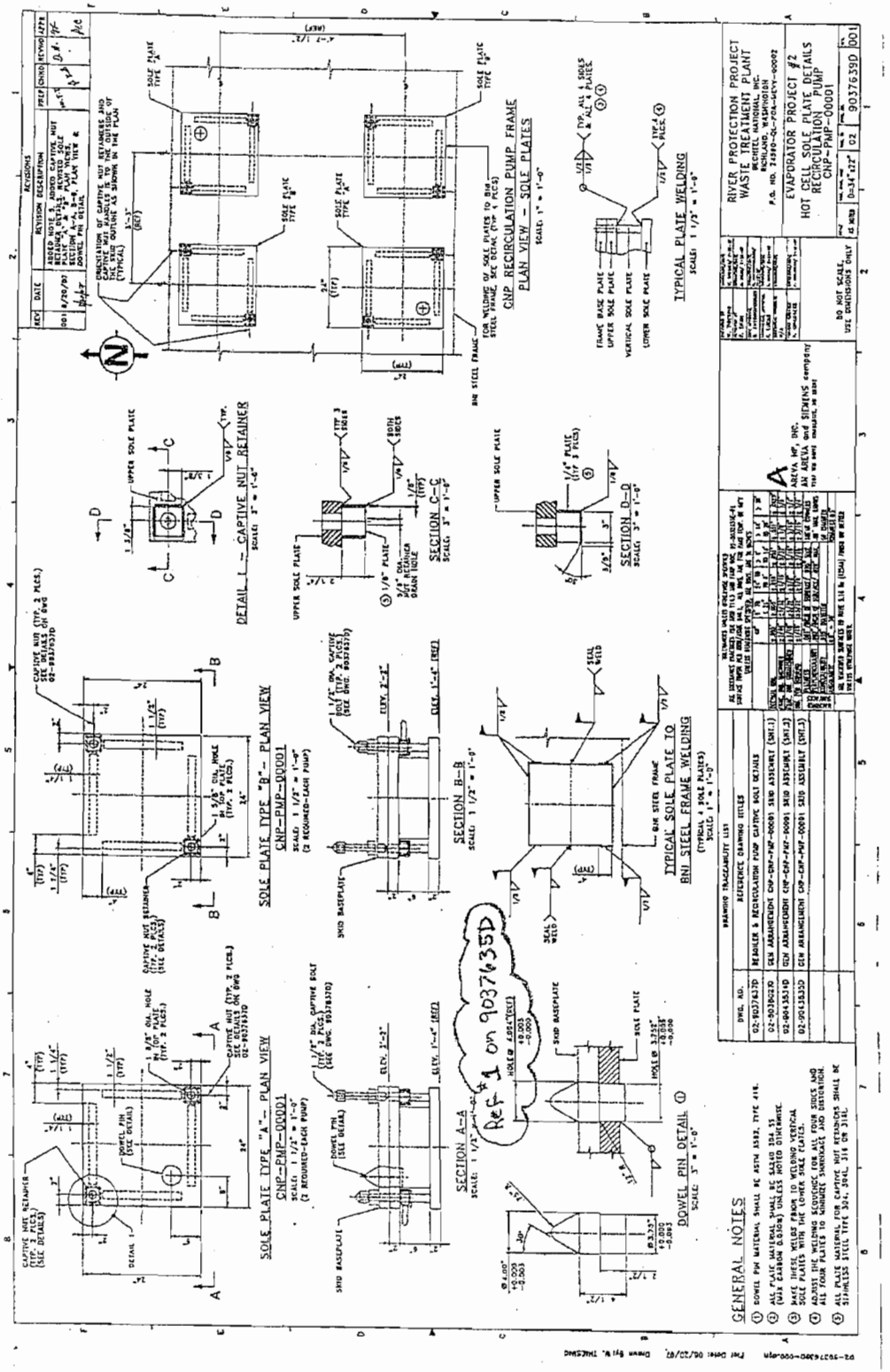
CNP RECIRCULATION PUMP FRAME
PLAN VIEW – SOLE PLATES
SCALE: 1" = 1'-0"
DETAIL 1 – CAPTIVE NUT RETAINER
SCALE: 3" = 1'-0"
SECTION C–C
SCALE: 3" = 1'-0"
SECTION D–D
SCALE: 3" = 1'-0"
SOLE PLATE TYPE "B" – PLAN VIEW
CNP-PMP-00001
SCALE: 1 1/2" = 1'-0"
(2 REQUIRED-EACH PUMP)
SECTION B–B
SCALE: 1 1/2" = 1'-0"
TYPICAL SOLE PLATE TO
BNI STEEL FRAME WELDING
(TYPICAL 4 SOLE PLATES)
SCALE: 1" = 1'-0"
TYPICAL PLATE WELDING
SCALE: 1 1/2" = 1'-0"
SOLE PLATE TYPE "A" – PLAN VIEW
CNP-PMP-00001
SCALE: 1 1/2" = 1'-0"
(2 REQUIRED-EACH PUMP)
SECTION A–A
SCALE: 1 1/2" = 1'-0"
DOWEL PIN DETAIL
SCALE: 3" = 1'-0"
Ref #1 on 90376350
GENERAL NOTES
RIVER PROTECTION PROJECT
WASTE TREATMENT PLANT
EVAPORATOR PROJECT #2
HOT CELL SOLE PLATE DETAILS
RECIRCULATION PUMP
CNP-PMP-00001
90376350
001

ATTACHMENT #12

TLP Primary Condenser Cooling Water Isometrics (Ref. CCN 186782)

FEP Primary Condenser Cooling Water Isometrics (Ref. CCN 183789)

24590-PTF-3PS-MEW-T0001 Rev. 3

Pg V-240

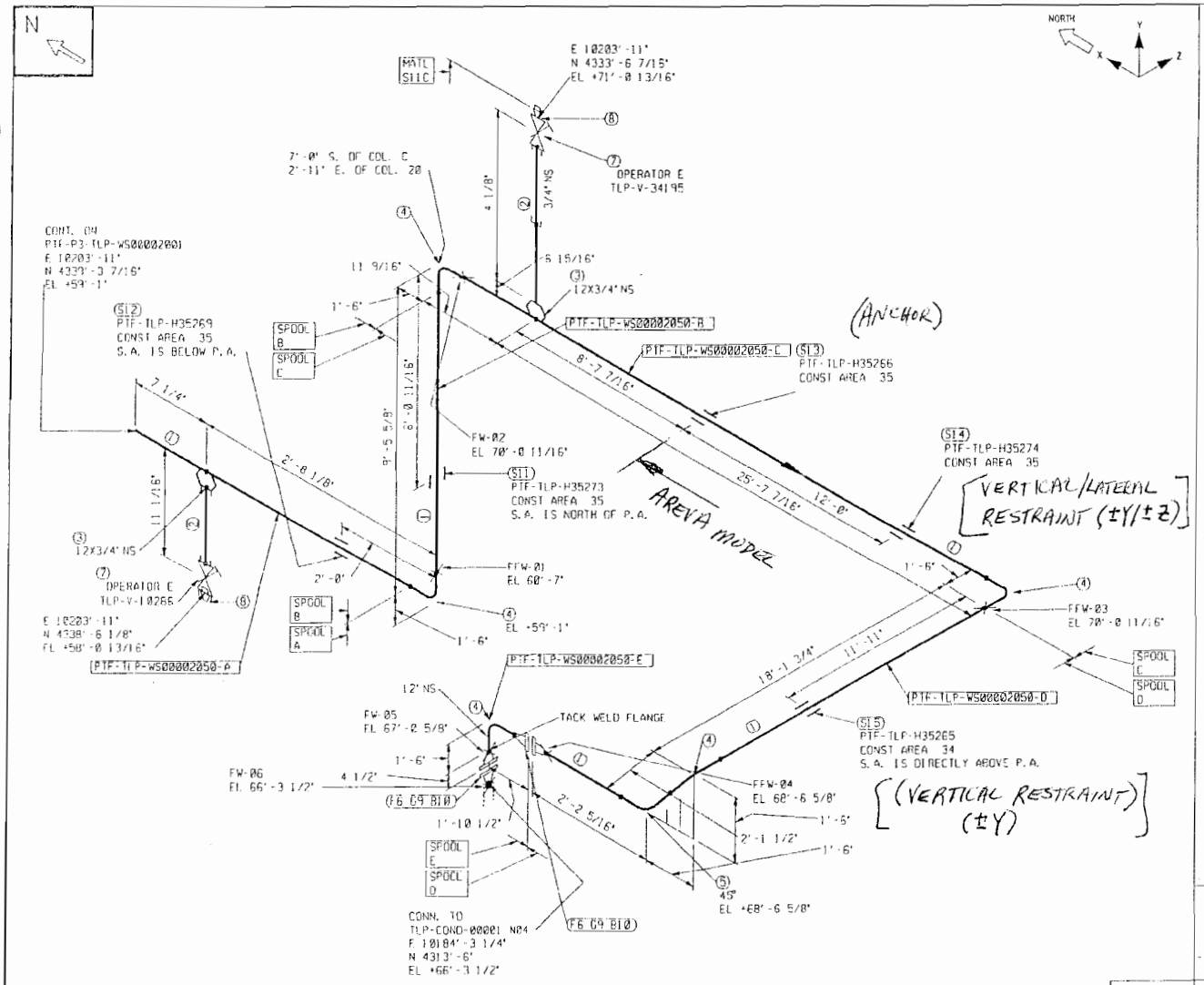

NOTES:

1. FOR GENERAL NOTES AND LEGEND SEE DWG. 24590-WTP-PO-50-00001001.

SHOP MATERIALS

PART NO	COMPONENT DESCRIPTION	N.S. (INCHES)	QTY	BECHTEL STK CODE
	PIPE			
1	PIPE, A312TP316/316L, EFW, SCH 10S, BBE	12	52'9"	PPPC080F0P07
2	PIPE, A312TP316/316L, SMLS, SCH40S, PE	3/4	0'6"	PPPC080G1A0L
	FITTINGS			
3	SOCKOLET, A182-F316+, CL3000	12X3/4	2	PFLSX7X01P92
4	EL - 90, LR, BW, A403WP316/316L-W, SCH 10S	12	5	PFDN4X8F1A0N
5	EL - 45, LR, BW, A403WP316/316L-W, SCH10S	12	1	PFRN4X8F180N
	FLANGES			
6	FLGWN, A182-F316/316L, CL150, SCH40S, RF, STDFF, B16.5	12	4	PFFWX71G5Y80
	VALVES / IN-LINE ITEMS			
7	VLV-GT, SLDWDGAS, A182F316L, CL000, SW, FNPT, API602CB3, TRM2, HW	3/4	2	PVVGUY80R001

FIELD MATERIALS

PART NO	COMPONENT DESCRIPTION	N.S. (INCHES)	QTY	BECHTEL STK CODE
	FITTINGS			
8	PLUG S/HD, MNPT, A182F316L	3/4	2	PFTKUY002F01
	GASKETS			
9	GASKET, SPWND, 316L-FG, 1/8"SS, CL150, B16.20, B16.5	12	2	FGSC2W.0060C
	BOLTS			
10	0.875 X 4.75 BOLT, STDBLT, A193B8-2/8	7/8	24	FBBSSY000029
	SUPPORTS			
11	PIPE SUPT, WS-A-A1-64.0-12-C		1	
12	PIPE SUPT, SS-A-4C-42.0-12		1	
13	PIPE SUPT, PTF-TLP-H35266, WELDED PIPE ATTCHMT		1	
14	PIPE SUPT, PTF-TLP-H35274		1	
15	PIPE SUPT, WS-A 2 72.0, WS-A-A1-64.0-12-C		1	

STRESS REVIEW PRINT		REV
☐ ACCEPTED	☐ NOT ACCEPTED	
☐ ACCEPTED W/ COMMENTS	☐ SUPPORTS ADDED TO MODEL BY:	
STRESS ANALYST:	DATE:	

RIVER PROTECTION PROJECT
WASTE TREATMENT PLANT
2435 STEVENS CENTER PLACE
RICHLAND, WA 99354

CONTRACT No: DE-AC27-01RV14136

P&ID: 24590-PTF-M6-TLP-00002 | CONST. WORK AREA: 35

PRETREATMENT FACILITY ISOMETRIC

LINE No. TLP-WS-00002-S11C-12 | PIPE SPEC: S11C

DWG No. 24590 PTF P3-TLP-WS00002050 | REV A

CM QUALITY LEVEL

PAINT CODE	N/A	CONTENT APPLICABLE TO ALARA? ☐ YES ☐ NO	
INSULATION TYPE	NI	ADR NO.	REV.
INSULATION THK.	0	SEISMIC CAT.	SC-IV

LENGTH (FT.) 22.66 (FOR INFO ONLY) ISM Created JAN-15-2009 13:09 Iso Created: JAN-16-2009 13:10 PCF File: 24590-PTF-P3-TLP-WS00002050 PLOTTED BY: rmendoza PLOT DATE: 01/16/2009 01:50 PM SHT 1 OF 1

COMPUTER GENERATED - MANUAL DESIGN CHANGES NOT PERMITTED

C:\ISO\24590-PTF-P3-TLP-WS00002050.DGN

24590-PTF-3PS-MEVV-T0001 Rev. 3

Pg V-241

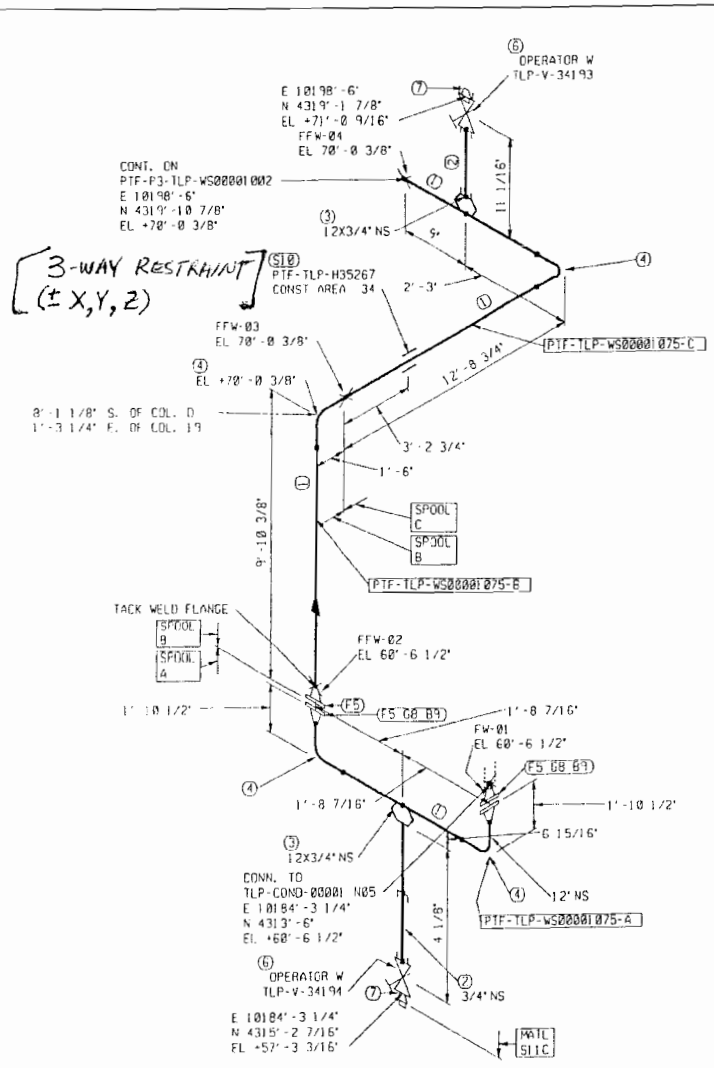

NOTES:

1. FOR GENERAL NOTES AND LEGEND SEE DWG. 24590-WTP-PO-50-00001001.

SHOP MATERIALS

PART NO	COMPONENT DESCRIPTION	N.S. (INCHES)	QTY.	BECHTEL STK CODE
	PIPE			
1	PIPE, A312TP316/316L, EFW, SCH 10S, BBE	12	21'2"	PPPC080F0P07
2	PIPE, A312TP316/316L, SMLS, SCH40S, PE	3/4	0'6"	PPPC080C1A0L
	FITTINGS			
3	SOCKOLET, A182-F316+, CL3000	12X3/4	2	PF.5x7x01P92
4	EL - 90, LR, BW, A403WP316/316L-W, SCH 10S	12	4	PF3N4x0F1A0N
	FLANGES			
5	FLGWN, A182-F316/316L, CL150, SCH40S, RF, SIOFF, B16.5	12	4	PFFWx71G5Y00
	VALVES / IN-LINE ITEMS			
6	VLV-GT, SLOWDGRS, A182F316L, CL800, SW, FNPT, API602DBB, TRIM 2, HW	3/4	2	PVVGUY80R001

FIELD MATERIALS

PART NO	COMPONENT DESCRIPTION	N.S. (INCHES)	QTY.	BECHTEL STK CODE
	FITTINGS			
7	PLUG S/HD, MNPT, A182F316L	3/4	2	PFTKUY800F01
	GASKETS			
8	GASKET, SPWND, 316L-FG, 1/8" SS, CL150, B16.20, B16.5	12	2	PGGC2W10060C
	BOLTS			
9	0.875 x 4.75 BOLT, STOBLT, A19388-2/8	7/8	24	FB0S5Y000029
	SUPPORTS			
10	PIPE SUPT, PTF-TLP-H35267, WELDED PIPE ATTCHMT		1	

STRESS REVIEW PRINT	REV
☐ ACCEPTED	☐ NOT ACCEPTED
☐ ACCEPTED W/ COMMENTS	☐ SUPPORTS ADDED TO MODEL BY:
STRESS ANALYST:	DATE:

BECHTEL

RIVER PROTECTION PROJECT
WASTE TREATMENT PLANT
2435 STEVENS CENTER PLACE
RICHLAND, WA 99354

CONTRACT No: DE-AC27-01RV14136

P&ID: 24590-PTF-M6-PCW-00001 | CONST. WORK AREA: 34

PRETREATMENT FACILITY ISOMETRIC

LINE No. TLP-WS-00001-S11C-12 | PIPE SPEC: S11C

DWG No. 24590-PTF-P3-TLP-WS00001075 | REV. 4

CM QUALITY LEVEL

PAINT CODE	N/A	CONTENT APPLICABLE TO ALARA? ☐ YES ☐ NO	
INSULATION TYPE	NI	ADR NO.	REV.
INSULATION T-K	0	SEISMIC CAT.	SC-IV

COMPUTER GENERATED - MANUAL DESIGN CHANGES NOT PERMITTED

LENGTH (FT) 36.85 (FOR INFO ONLY) JSM Created: JAN 21 2009 10:40 Iso Created: JAN 21 2009 10:41 PCF File: 24590-PTF-P3-TLP-WS00001075 PLOTTED BY: mmercier PLOT DATE: 01/21/2009 10:44:43 AM SHT 1 OF 1

ISO PCF: C:\iso\24590-PTF-P3-TLP-WS00001075B.DGN

24590-PTF-3PS-MEVV-T0001 Rev. 3

Pg V-242

COMPUTER GENERATED - MANUAL DESIGN CHANGES NOT PERMITTED

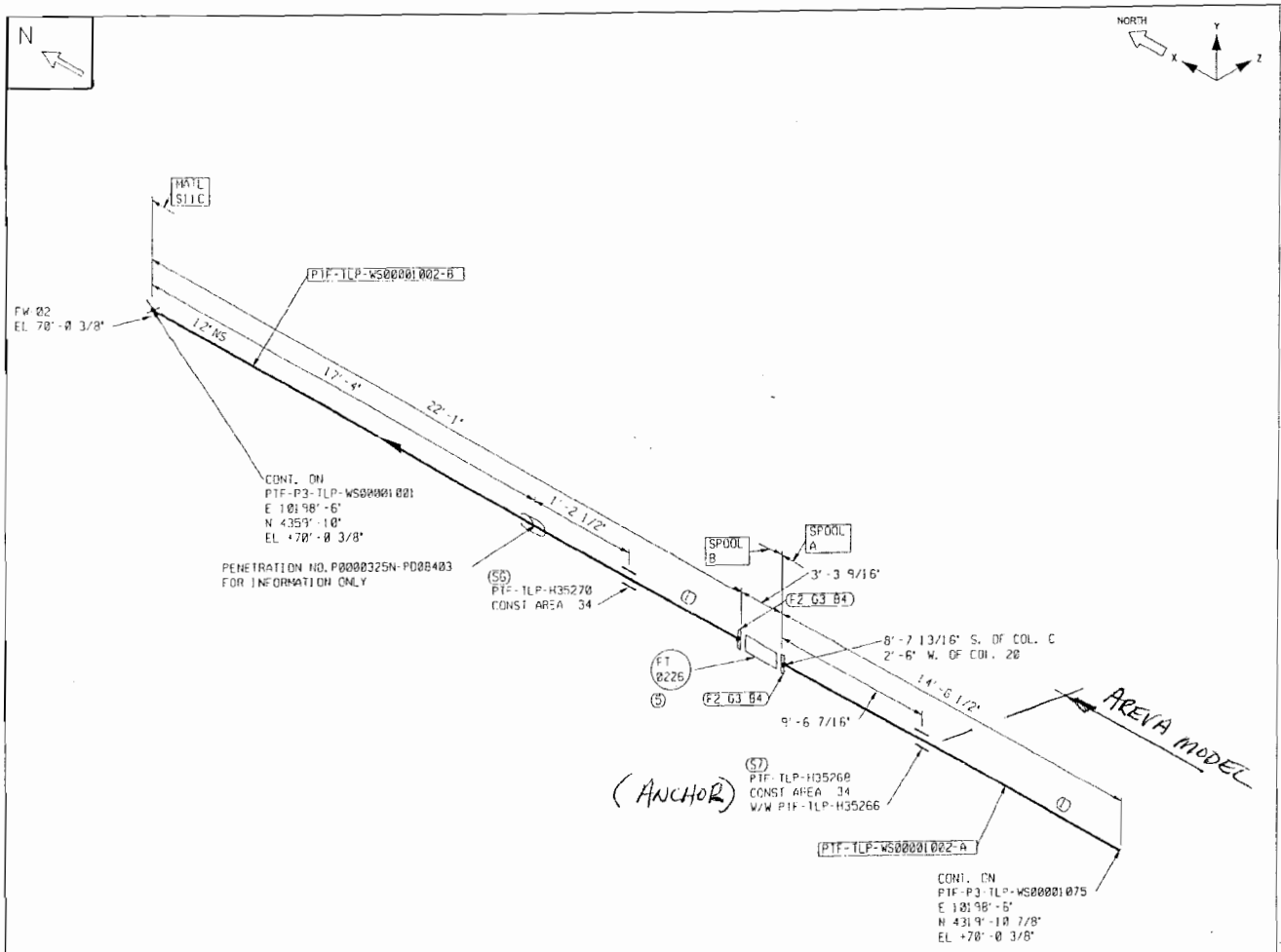

SHOP MATERIALS

PART NO	COMPONENT DESCRIPTION	N.S. (INCHES)	QTY	BECHTEL STK CODE
	PIPE			
1	PIPE, A312TP316/316L, EFW, SCH 10S, BBE	12	36'6"	PPPC000F0P07
	FLANGES			
2	FLGSLPON, A182-F316/316L, CL150, RF, STOFF, B16.5	12	2	PFFFX7122P00

FIELD MATERIALS

PART NO	COMPONENT DESCRIPTION	N.S. (INCHES)	QTY	BECHTEL STK CODE
	GASKETS			
3	GASKET, SPWND, 316L-FG, 1/8" SS, CL150, B16.20, B16.5	12	2	PGGC2W100R2C
	BOLTS			
4	0.875 X 4.75 BOLT, STDBLT, A193B8-2/8	7/8	24	FBBSY000029
	INSTRUMENTS / SPECIALTY ITEMS			
5	FT-0226	12	1	N/A
	SUPPORTS			
6	PIPE SUPT, PTF-TLP-H35270		1	
7	PIPE SUPT, PTF-TLP-H35268, WELDED PIPE ATTCHMT		1	

STRESS REVIEW PRINT		REV	
☐	ACCEPTED	☐	NOT ACCEPTED
☐	ACCEPTED W/ COMMENTS	☐	SUPPORTS ADDED TO MODEL BY:
STRESS ANALYST:		DATE:	

RIVER PROTECTION PROJECT
WASTE TREATMENT PLANT
2435 STEVENS CENTER PLACE
RICHLAND, WA 99354

CONTRACT No: DE-AC27-01RV14136

P&ID: 24590-PTF-M6-TLP-00002 | CONST. WORK AREA: 34

PRETREATMENT FACILITY ISOMETRIC

LINE No. TLP-WS-00001-S11C-12 | PIPE SPEC: S11C

DWG No. 24590-PTF-P3-TLP-WS00001002 | REV A

NOTES:

1. FOR GENERAL NOTES AND LEGEND SEE DWG 24590 WTP-P0-50-00001001

CM QUALITY LEVEL

PAINT CODE	N/A	CONTENT APPLICABLE TO ALARA? ☐ YES ☐ NO	
INSULATION TYPE	NI	ADR NO.	REV
INSULATION THK.	0	SEISMIC CAT.	SC-IV

LENGTH (FT.) 39.92 (FOR INFO ONLY) JSM Created: JAN 16-2009 13:09 Iso Created: JAN-16-2009 13:10 PCF File: 24590-PTF-P3-TLP-WS00001002 PLOTTED BY: cmenczyl PLOT DATE 01/16/2009 01:13:45 PM SHT 1 OF 1

ISO TYPE P1 - STRESS C:\iso\24590-PTF-P3-TLP-WS00001002.DGN

24590-PTF-3PS-MEVV-T0001 Rev. 3

Pg V-243

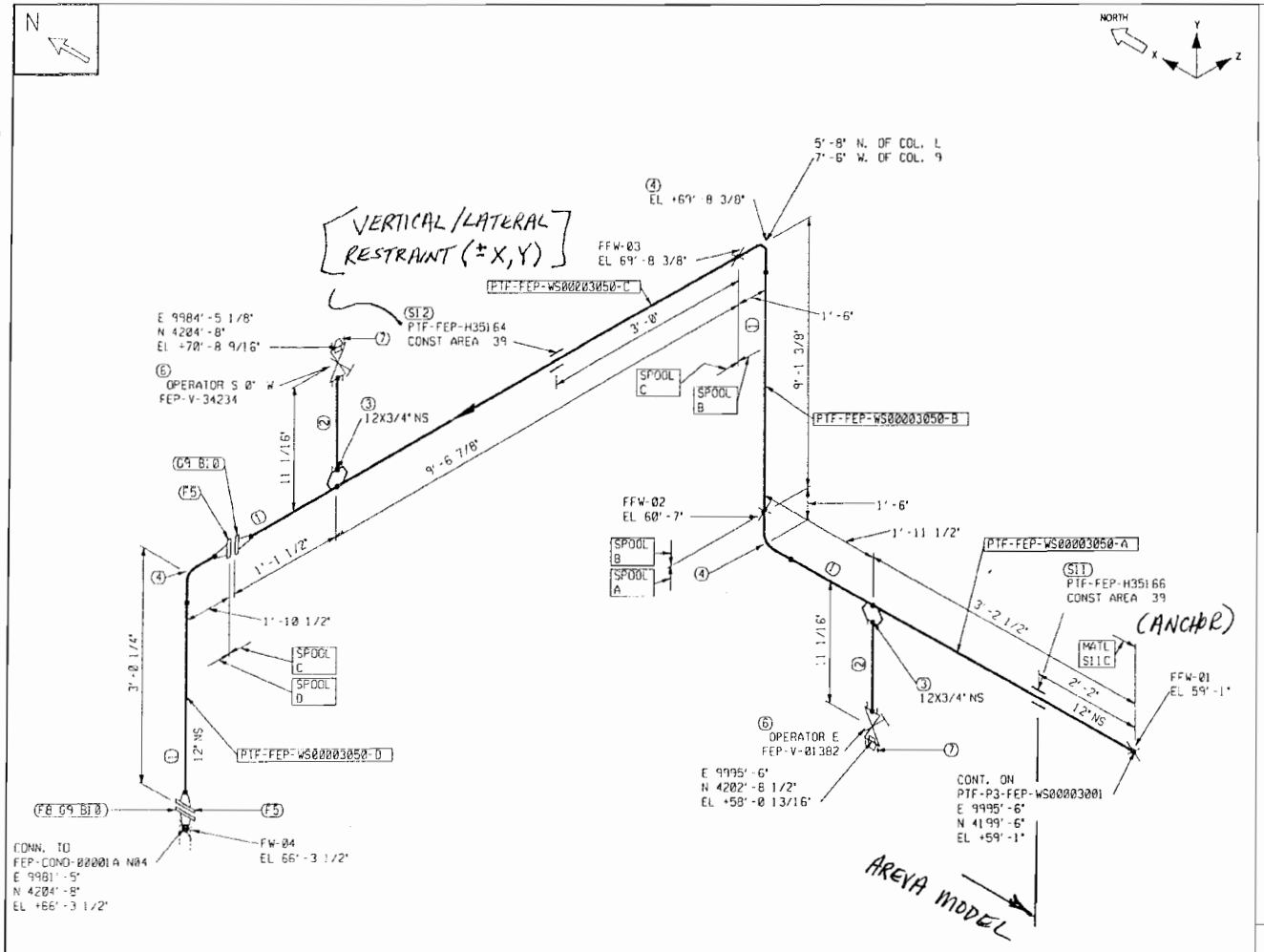

NOTES:

1. FOR GENERAL NOTES AND LEGEND SEE DWG. 24590-WTP-PO-50-00001001.

SHOP MATERIALS

PART NO	COMPONENT DESCRIPTION	N.S. (INCHES)	QTY	BECHTEL STK CODE
	PIPE			
1	PIPE, A312TP316/316L, EFW, SCH 10S, BBE	12	22'9"	PPPC080F0P07
2	PIPE, A312TP316/316L, SMLS, SCH40S, PE	3/4	0'6"	PPPC080G1A0L
	FITTINGS			
3	SOCKOLET, A182-F316*, CL3000	12X3/4	2	PFLSX7X01P92
4	EL - 90, LR, BW, A403WP316/316L-W, SCH 10S	12	3	PFDN4X0F1A0N
	FLANGES			
5	FLGWN, A182-F316/316L, CL150, SCH40S, RF, STDFF, B16.5	12	3	PFFWX71G5Y0D
	VALVES / IN-LINE ITEMS			
6	VLV-GT, SLDWOGRS, A182F316L, CL800, SW, FNPT, API602DBB, TRM12, HW	3/4	2	PVVGUY82R001

FIELD MATERIALS

PART NO	COMPONENT DESCRIPTION	N.S. (INCHES)	QTY	BECHTEL STK CODE
	FITTINGS			
7	PLUG S/HD, MNPT, A182F316L	3/4	2	PF1KUY002F01
	FLANGES			
8	FLGWN, A182-F316/316L, CL150, SCH40S, RF, STDFF, B16.5	12	1	PFFWX71G5Y0D
	GASKETS			
9	GASKET, SPWND, 316L-FG, 1/8"SS, CL150, B16.20, B16.5	12	2	PGGC2W10060C
	BOLTS			
10	0.875 X 4.75 BOLT, STDBLT, A193B8-2/8	7/8	24	FBBS5Y000029
	SUPPORTS			
11	PIPE SUPT, PTF-FEP-H35166, WELDED PIPE ATTCHMT		1	
12	PIPE SUPT, GS-A-40-48.0-12		1	

STRESS REVIEW PRINT		REV
☐ ACCEPTED	☐ NOT ACCEPTED	
☐ ACCEPTED W/ COMMENTS	☐ SUPPORTS ADDED TO MODEL BY:	
STRESS ANALYST:	DATE:	

RIVER PROTECTION PROJECT
WASTE TREATMENT PLANT
2435 STEVENS CENTER PLACE
RICHLAND, WA 99354

CONTRACT No: DE-AC27-01RV14136

P&ID: 24590-PTF-M6-PCW-00001 | CONST. WORK AREA: 39

PRETREATMENT FACILITY ISOMETRIC

LINE No. FEP-WS-00003-S11C-12 | PIPE SPEC: S11C

DWG No. 24590-PTF-P3-FEP-WS00003050 | REV A

CM QUALITY LEVEL

PAINT CODE	N/A	CONTENT APPLICABLE TO ALARA? ☐ YES ☐ NO	
INSULATION TYPE	NI	ADR NO.	REV.
INSULATION THK.	0	SEISMIC CAT.	SC-IV

COMPUTER GENERATED - MANUAL DESIGN CHANGES NOT PERMITTED

ISO TYPE: P_xSTRESS C:\iso\24590-PTF-P3-FEP-WS00003050C.DGN

LENGTH (FT.) 35.48 (FOR INFO ONLY) JSM Created: FEB-05-2009 08:23 Iso Created: FEB-05-2009 08:23 PCF File: 24590-PTF-P3-FEP-WS00003050 PLOTTED BY: immercier PLOT DATE: 02/05/2009 09:14:56 AM SHT. 1 OF 1

24590-PTF-3PS-MEVV-T0001 Rev. 3

Pg V-244

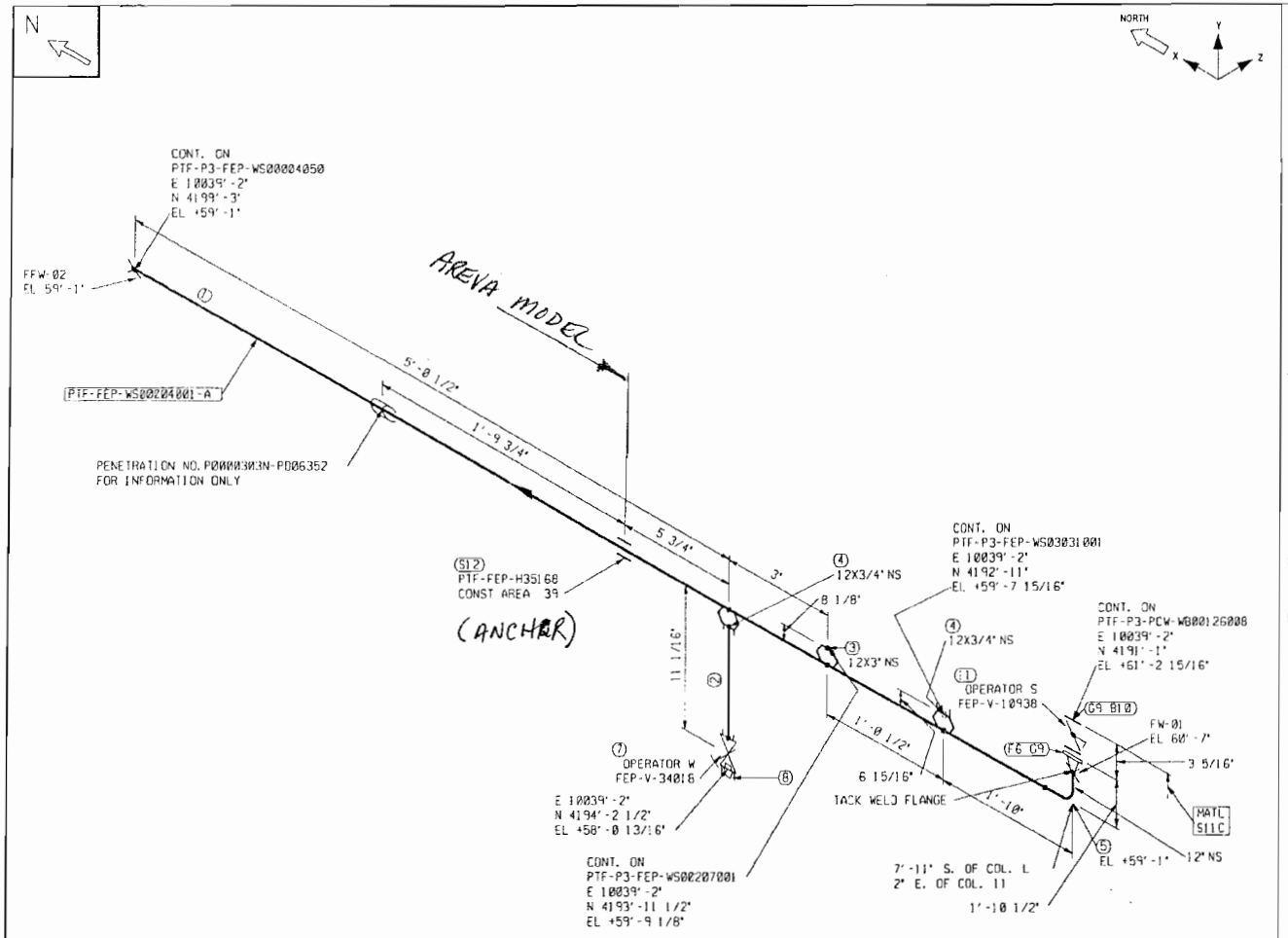

NOTES:

1. FOR GENERAL NOTES AND LEGEND SEE DWG. 24590-WTP-PD-50-00001001.

SHOP MATERIALS

PART NO	COMPONENT DESCRIPTION	N.S. (INCHES)	QTY	BECHTEL STK CODE
	PIPE			
1	PIPE, A312TP316/316L, EFW, SCH 10S, BBE	12	6'8"	PPPC0B0F0P07
2	PIPE, A312TP316/316L, SMLS, SCH40S, PE	3/4	0'3"	PPPC0B0G1A0L
	FITTINGS			
3	WELDOLET, A182-F316*, SCH 10S, SCH40S	12X3	1	PFLWX70F1WRG
4	SOCKOLET, A182-F316*, CL3000	12X3/4	2	PFLSX7X01P92
5	EL - 90, LR, BW, A403WP316/316L-W, SCH 10S	12	1	PFQN4X0F1A0N
	FLANGES			
6	FLGWN, A182-F316/316L, CL150, SCH10S, RF, STDFF, B16.5	12	1	PFFWX71F5Y0D
	VALVES / IN-LINE ITEMS			
7	VLV-GT, SLOWDGRS, A182F316L, CL800, SW, FNPT, API602OBB, TRM12, HW	3/4	1	PVVGUY80R001

FIELD MATERIALS

PART NO	COMPONENT DESCRIPTION	N.S. (INCHES)	QTY	BECHTEL STK CODE
	FITTINGS			
8	PLUG S/HD, MNPT, A182F316L	3/4	1	PFTKUY200F01
	GASKETS			
9	GASKET, SPWND, 316L-FG, 1/8" SS, CL150, B16.20, B16.5	12	2	PGGC2W10060C
	BOLTS			
10	0.875 X 8.25 BOLT, STDBLT, A19388-2/8	7/8	12	FBBS5Y00002Q
	VALVES / IN-LINE ITEMS			
11	VLV-BFLY, WFRTYP, A351CF8M, CL150, STDFF, B16.34, 316DSR	12	1	PVVFUC108R03
	SUPPORTS			
12	PIPE SUPT, PTF-FEP-H35168, WELDED PIPE ATTCHMT		1	

STRESS REVIEW PRINT	REV
☐ ACCEPTED	☐ NOT ACCEPTED
☐ ACCEPTED W/ COMMENTS	☐ SUPPORTS ADDED TO MODEL BY:
STRESS ANALYST:	DATE:

BECHTEL

RIVER PROTECTION PROJECT
WASTE TREATMENT PLANT
2435 STEVENS CENTER PLACE
RICHLAND, WA 99354

CONTRACT No: DE-AC27-01RV14136

P&ID: 24590-PTF-M6-PCW-00001 | CONST. WORK AREA: 39

CM QUALITY LEVEL

PRETREATMENT FACILITY ISOMETRIC

PAINT CODE	N/A	CONTENT APPLICABLE TO ALARA? ☐ YES ☐ NO	
INSULATION TYPE	NI	ADR NO.	REV.
INSULATION THK.	0	SEISMIC CAT.	SC-IV

LINE No. FEP-WS-00004-S11C-12 | PIPE SPEC: S11C

DWG No. 24590-PTF-P3-FEP-WS00004001 | REV A

LENGTH (FT.) 12.69 (FOR INFO ONLY) JSM Created: FEB-05-2009 08:23 Iso Created: FEB-05-2009 08:23 PCF File: 24590-PTF-P3-FEP-WS00004001 PLOTTED BY: mmercier PLOT DATE: 02/05/2009 09:14:45 AM SHT. 1 OF 1

ISO TYPE PT_xSTRESS C:\iso\24590-PTF-P3-FEP-WS00004001C.DGN

COMPUTER GENERATED - MANUAL DESIGN CHANGES NOT PERMITTED

24590-PTF-3PS-MEVV-T0001 Rev.
Pg V-245

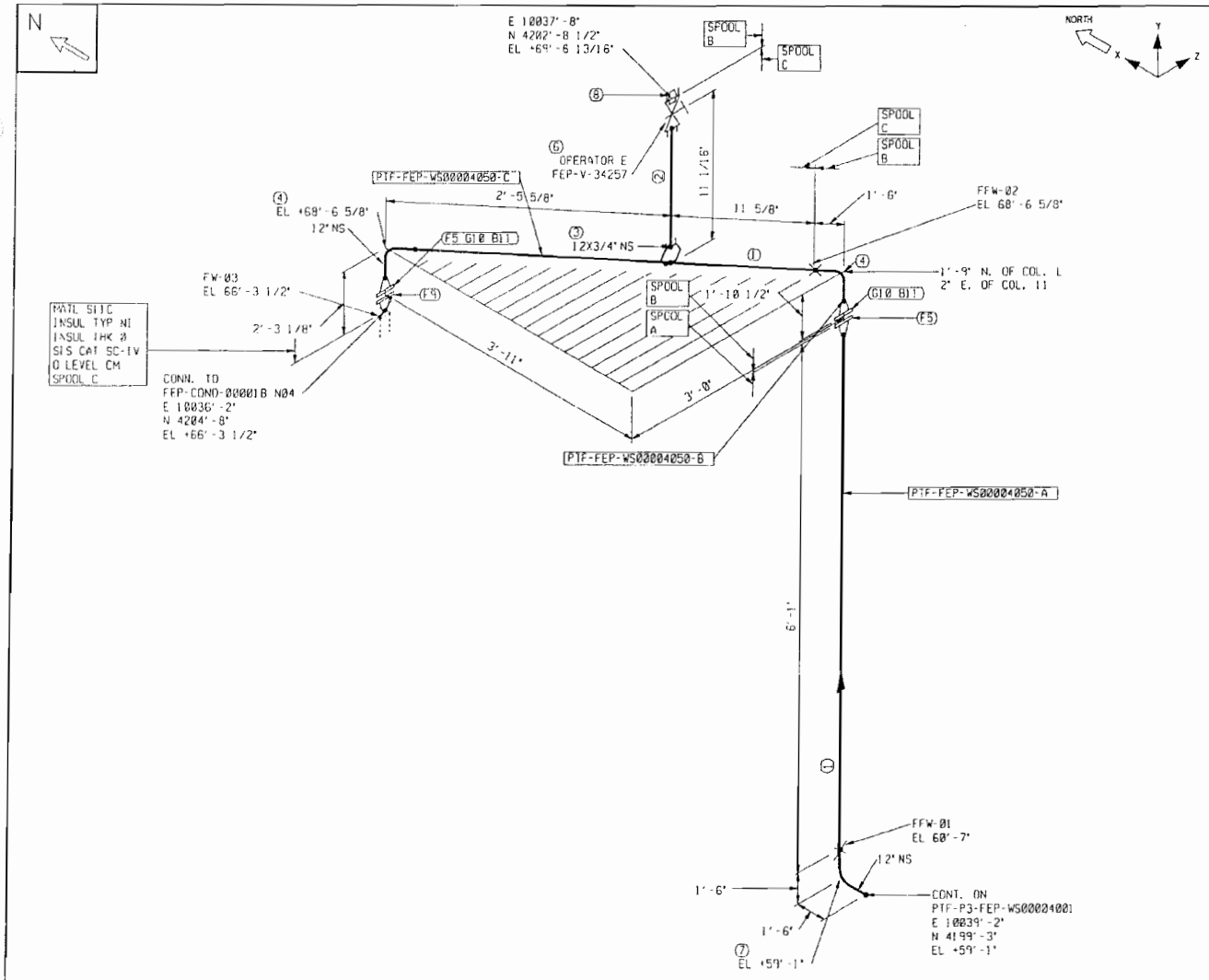

COMPUTER GENERATED - MANUAL DESIGN CHANGES NOT PERMITTED

SHOP MATERIALS

PART NO	COMPONENT DESCRIPTION	N.S. (INCHES)	QTY	BECHTEL STK CODE
	PIPE			
1	PIPE, A312TP316/316L, EFW, SCH 10S, BBE	12	7'8"	PPPC080F0P07
2	PIPE, A312TP316/316L, SMLS, SCH40S, PE	3/4	0'3"	PPPC080G1A0L
	FITTINGS			
3	SOCKOLET, A182-F316*, CL3000	12X3/4	1	PFLSX7X01P92
4	EL - 90, LR, BW, A403WP316/316L-W, SCH 10S	12	2	PFQN4X0F1A0N
	FLANGES			
5	FLGWN, A182-F316/316L, CL150, SCH40S, RF, STDFF, B16.5	12	3	PFFWX71G5Y0D
	VALVES / IN-LINE ITEMS			
6	VLV-GT, SLDWDGRS, A182F316L, CL800, SW, FNPT, API602DBB, TRM12, HW	3/4	1	PVVGUY88R001

FIELD MATERIALS

PART NO	COMPONENT DESCRIPTION	N.S. (INCHES)	QTY	BECHTEL STK CODE
	FITTINGS			
7	EL - 90, LR, BW, A403WP316/316L-W, SCH 10S	12	1	PFQN4X0F1A0N
8	PLUG S/HD, MNPT, A182F316L	3/4	1	PFTKUY000F01
	FLANGES			
9	FLGWN, A182-F316/316L, CL150, SCH40S, RF, STDFF, B16.5	12	1	PFFWX71G5Y0D
	GASKETS			
10	GASKET, SPWND, 316L-FG, 1/8" SS, CL150, B16.20, B16.5	12	2	PGGC2W10060C
	BOLTS			
11	0.875 X 4.75 BOLT, STDBLT, A193B8-2/8	7/8	24	FBBSSY000029

AREVA MODEL

STRESS REVIEW PRINT	REV
☐ ACCEPTED	☐ NOT ACCEPTED
☐ ACCEPTED W/ COMMENTS	☐ SUPPORTS ADDED TO MODEL BY:
STRESS ANALYST:	DATE:

BECHTEL

RIVER PROTECTION PROJECT
WASTE TREATMENT PLANT
2435 STEVENS CENTER PLACE
RICHLAND, WA 99354

CONTRACT No: DE-AC27-01RV14136

P&ID: 24590-PTF-M6-PCW-00001 | CONST. WORK AREA: 39

PRETREATMENT FACILITY ISOMETRIC

LINE No. FEP-WS-00004-S11C-12 | PIPE SPEC: S11C

DWG No. 24590-PTF-P3-FEP-WS00004050 | REV A

NOTES:

1. FOR GENERAL NOTES AND LEGEND SEE DWG. 24590-WTP-PD-50-00001001.

CM QUALITY LEVEL

PAINT CODE	N/A	CONTENT APPLICABLE TO ALARA? ☐ YES ☐ NO	
INSULATION TYPE	NI	ADR NO. REV.	
INSULATION THK.	0	SEISMIC CAT.	SC-IV

ISO TYPE: PT_STRESS C:\iso\24590-PTF-P3-FEP-WS00004050C.DGN

LENGTH (FT.): 19.27 (FOR INFO ONLY) JSM Created: FEB-05-2009 08:23 Iso Created: FEB-05-2009 08:23 PCF File: 24590-PTF-P3-FEP-WS00004050 PLOTTED BY: mmercier PLOT DATE: 02/05/2009 09:14:36 AM SHT. 1 OF 1

24590-PTF-3PS-MEVV-T0001 Rev. 3

Pg V-246

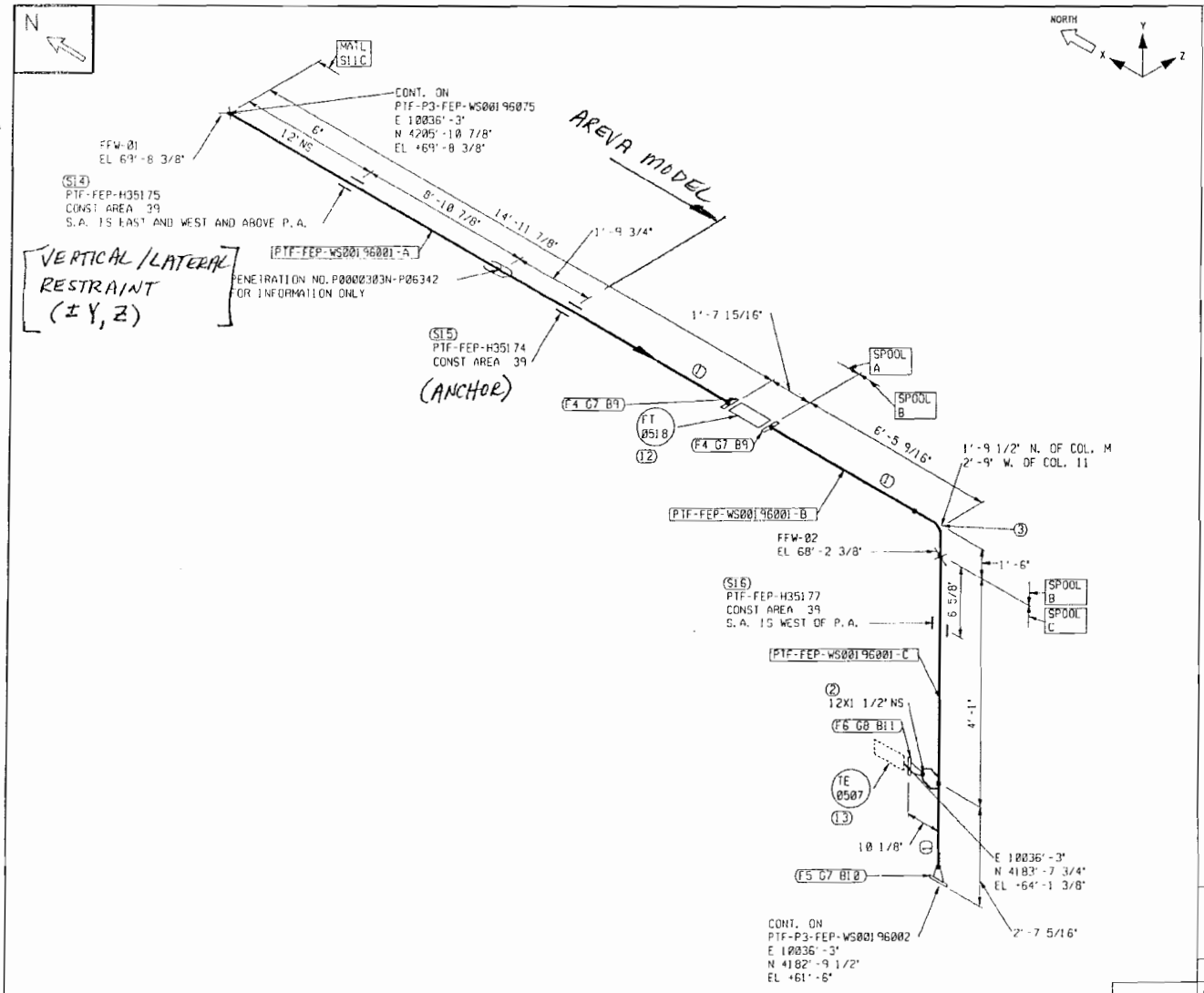

NOTES:

1. FOR GENERAL NOTES AND LEGEND SEE DWG. 24590-WTP-PO-50-00001001.

SHOP MATERIALS

PART NO	COMPONENT DESCRIPTION	N.S. (INCHES)	QTY	BECHTEL STK CODE
	PIPE			
1	PIPE, A312TP316/316L, EFW, SCH 10S, BBE	12	26'1"	PPPC080F0P07
	FITTINGS			
2	WELDOLET, A182-F316*, SCH 10S, SCH40S	12X1 1/2	1	PFLWX70F1W94
3	EL - 90, LR, BW, A403WP316/316L-W, SCH 10S	12	1	PFDN4X0F1A0N
	FLANGES			
4	FLGSLPON, A182-F316/316L, CL150, RF, STDFF, B16.5	12	2	PFFPX7102P0D
5	FLGWN, A182-F316/316L, CL150, SCH40S, RF, STDFF, B16.5	12	1	PFFWX7105Y0D
6	FLGWN, A182-F316/316L, CL150, SCH40S, RF, STDFF, B16.5	1 1/2	1	PFFWX7105Y04

FIELD MATERIALS

PART NO	COMPONENT DESCRIPTION	N.S. (INCHES)	QTY	BECHTEL STK CODE
	GASKETS			
7	GASKET, SPWND, 316L-FG, 1/8"SS, CL150, B16.20, B16.5	12	3	PGGC2W100060C
8	GASKET, SPWND, 316L-FG, 1/8"SS, CL150, B16.20, B16.5	1 1/2	1	PGGC2W100603
	BOLTS			
9	0.875 X 4.75 BOLT, STDBLT, A193B8-2/8	7/8	24	FBBS5Y000029
10	0.875 X 8.25 BOLT, STDBLT, A193B8-2/8	7/8	12	FBBS5Y000020
11	0.5 X 2.75 BOLT, STDBLT, A193B8-2/8	1/2	4	FBBS5Y000003
	INSTRUMENTS / SPECIALTY ITEMS			
12	FT-0518	12	1	N/A
13	TE-0507	1 1/2	1	N/A
	SUPPORTS			
14	PIPE SUPT, MS-F-2-72.0, GS-A-40-36.0-12		1	
15	PIPE SUPT, PTF-FEP-H35174, WELDED PIPE ATTCHMT		1	
16	PIPE SUPT, WS-A-A1-76.0-12-C		1	

STRESS REVIEW PRINT		REV	
☐	ACCEPTED	☐	NOT ACCEPTED
☐	ACCEPTED W/ COMMENTS	☐	SUPPORTS ADDED TO MODEL BY:
STRESS ANALYST:		DATE:	

RIVER PROTECTION PROJECT
WASTE TREATMENT PLANT
2435 STEVENS CENTER PLACE
RICHLAND, WA 99354

CONTRACT No: DE-AC27-01RV14136

P&ID: 24590-PTF-MG-PCW-00001 | CONST. WORK AREA: 39

PRETREATMENT FACILITY ISOMETRIC

LINE No. FEP-WS-0196-S11C-12 | PIPE SPEC: S11C

DWG No. 24590-PTF-P3-FEP-WS00196001 | REV A

CM QUALITY LEVEL

PAINT CODE	N/A	CONTENT APPLICABLE TO ALARA? ☐ YES ☐ NO	
INSULATION TYPE	NI	ADR NO.	REV.
INSULATION THK.	0	SEISMIC CAT.	SC-IV

ISO TYPE 3T...XS:PLSS C:\iso\24590-PTF-P3-FEP-WS00196001.DGN

COMPUTER GENERATED - MANUAL DESIGN CHANGES NOT PERMITTED

LENGTH (FT.) 32.42 (FOR INFO ONLY) JSM Created FEB-05-2009 08:23 Iso Created: FEB-05-2009 08:24 PCF File: 24590-PTF-P3-FEP-WS00196001 PLOTTED BY: mmercier PLOT DATE: 02/05/2009 09:14:22 AM SHT. 1 OF 1

24590-PTF-3PS-MEVV-T0001 Rev. 3

Pg V-247

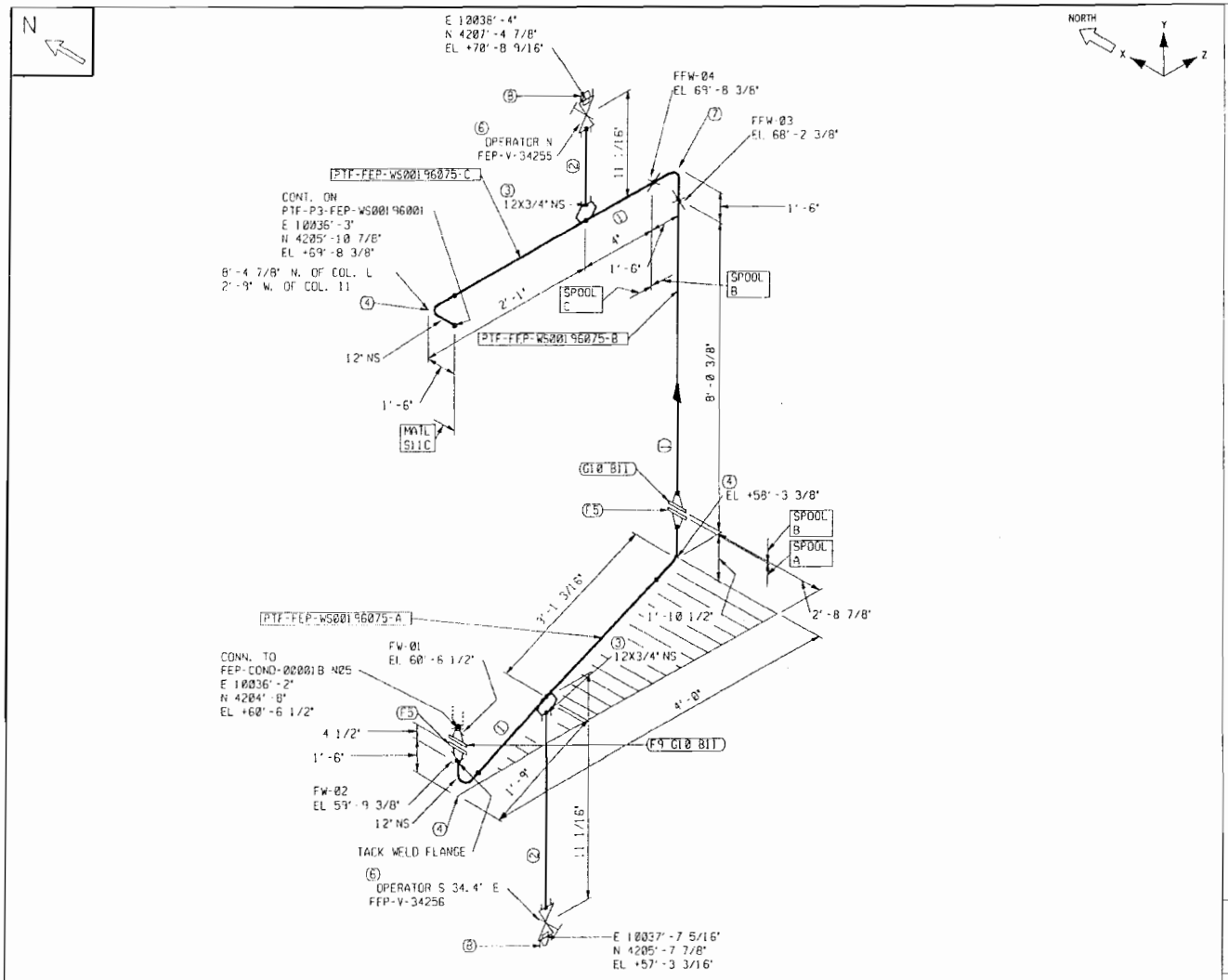

SHOP MATERIALS

PART NO	COMPONENT DESCRIPTION	N.S. (INCHES)	QTY	BECHTEL STK CODE
	PIPE			
1	PIPE, A312TP316/316L, EFW, SCH 10S, BBE	12	12'-6"	PPPC080F0P07
2	PIPE, A312TP316/316L, SMLS, SCH40S, PE	3/4	0'-6"	PPPC080G1A0L
	FITTINGS			
3	SOCKOLET, A182-F316+, CL3000	12X3/4	2	PFLSX7X01P92
4	EL - 90, LR, BW, A403WP316/316L-W, SCH 10S	12	3	PFDN4X0F1A0N
	FLANGES			
5	FLGWN, A182-F316/316L, CL150, SCH40S, RF, STDFF, B16.5	12	3	PFFWX71G5Y0D
	VALVES / IN-LINE ITEMS			
6	VLV-GT, SLDWDGAS, A182F316L, CL800, SW, FNPT, API6D20BB, TRM12, HW	3/4	2	PVVG0Y80R001

FIELD MATERIALS

PART NO	COMPONENT DESCRIPTION	N.S. (INCHES)	QTY	BECHTEL STK CODE
	FITTINGS			
7	EL - 90, LR, BW, A403WP316/316L-W, SCH 10S	12	1	PFDN4X0F1A0N
8	PLUG S/HD, MNPT, A182F316L	3/4	2	PFTKUY000F01
	FLANGES			
9	FLGWN, A182-F316/316L, CL150, SCH40S, RF, STDFF, B16.5	12	1	PFFWX71G5Y0D
	GASKETS			
10	GASKET, SPWND, 316L-FG, 1/8"SS, CL150, B16.20, B16.5	12	2	PGGC2W10060C
	BOLTS			
11	0.875 X 4.75 BOLT, STDBLT, A193B8-2/8	7/8	24	FBBS5Y000229

AREVA MODEL

STRESS REVIEW PRINT		REV	
☐ ACCEPTED		☐ NOT ACCEPTED	
☐ ACCEPTED W/ COMMENTS		☐ SUPPORTS ADDED TO MODEL BY:	
STRESS ANALYST:		DATE:	

RIVER PROTECTION PROJECT
WASTE TREATMENT PLANT
2435 STEVENS CENTER PLACE
RICHLAND, WA 99354

CONTRACT No: DE-AC27-01RV14136

P&ID: 24590-PTF-M6-PCW-00001 | CONST. WORK AREA: 39

PRETREATMENT FACILITY ISOMETRIC

LINE No. FEP-WS-00196-S11C-12 | PIPE SPEC: S11C

DWG No. 24590-PTF-P3-FEP-WS00196075 | REV A

NOTES:

1 FOR GENERAL NOTES AND LEGEND SEE DWG. 24590-WTP-PO-50-00001001.

CM QUALITY LEVEL

PAINT CODE	N/A	CONTENT APPLICABLE TO ALARA? ☐ YES ☐ NO	
INSULATION TYPE	NI	ADR NO.	REV.
INSULATION THK.	0	SEISMIC CAT.	SC-IV

LENGTH (FT.) 26.15 (FOR INFO ONLY) JSM Created: FEB-09-2009 11:12 Iso Created: FEB-09-2009 11:12 PCF File: 24590-PTF-P3-FEP-WS00196075 PLOTTED BY: mmercier PLOT DATE: 02/09/2009 11:38:09 AM SHT. 1 OF 1

ISO TYPE: PT_xSTRESS C:\Documents and Settings\mmercier\Local Settings\Temporary Internet Files\OLKA\24590-PTF-P3-FEP-WS00196075.DGN

COMPUTER GENERATED - MANUAL DESIGN CHANGES NOT PERMITTED

24590-PTF-3PS-MEVV-T0001 Rev. 3

Pg V-248

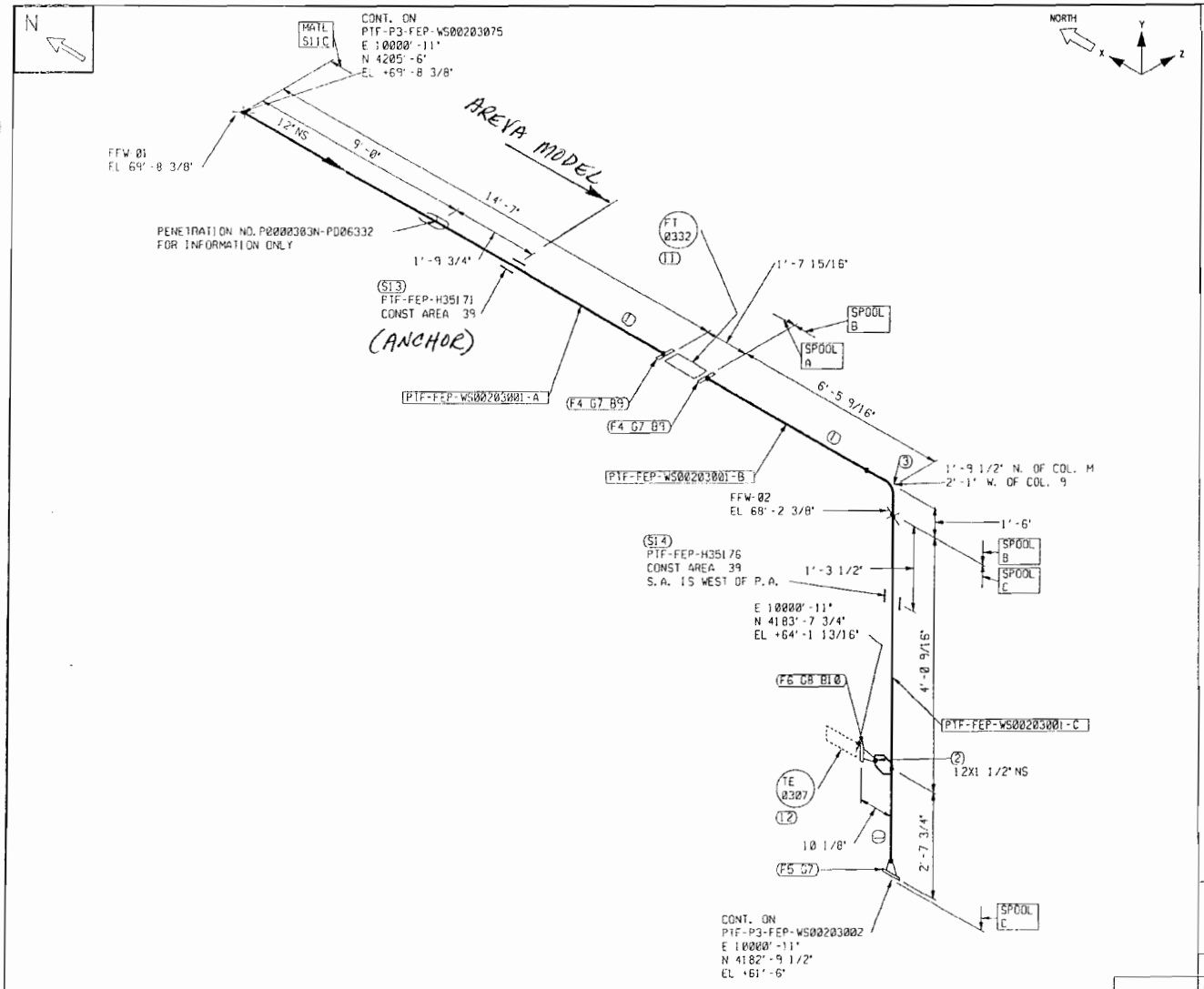

NOTES:

1. FOR GENERAL NOTES AND LEGEND SEE DWG. 24590-WTP-PO-50-00001001.

SHOP MATERIALS

PART NO	COMPONENT DESCRIPTION	N.S. (INCHES)	QTY	BECHTEL STK CODE
	PIPE			
1	PIPE, A312TP316/316L, EFW, SCH 10S, BBE	12	25'8"	PPPC080F0F07
	FITTINGS			
2	WELDOLET, A182-F316*, SCH 10S, SCH40S	12X1 1/2	1	PFLWX70F1W94
3	EL - 90, LR, BW, A403WP316/316L-W, SCH 10S	12	1	PFQN4X0F1A0N
	FLANGES			
4	FLGSLPON, A182-F316/316L, CL150, RF, STOFF, B16.5	12	2	PFFPX7102F0D
5	FLGWN, A182-F316/316L, CL150, SCH40S, RF, STOFF, B16.5	12	1	PFFWX7105Y0D
6	FLGWN, A182-F316/316L, CL150, SCH40S, RF, STOFF, B16.5	1 1/2	1	PFFWX7105Y04

FIELD MATERIALS

PART NO	COMPONENT DESCRIPTION	N.S. (INCHES)	QTY	BECHTEL STK CODE
	GASKETS			
7	GASKET, SPWND, 316L-FG, 1/8"SS, CL150, B16.20, B16.5	12	3	PGGC2W10060C
8	GASKET, SPWND, 316L-FG, 1/8"SS, CL150, B16.20, B16.5	1 1/2	1	PGGC2W100603
	BOLTS			
9	0.875 X 4.75 BOLT, STDBLT, A19388-2/8	7/8	24	FBBS5Y000029
10	0.5 X 2.75 BOLT, STDBLT, A19388-2/8	1/2	4	FBBS5Y000003
	INSTRUMENTS / SPECIALTY ITEMS			
11	FT-0332	12	1	N/A
12	TE-0307	1 1/2	1	N/A
	SUPPORTS			
13	PIPE SUPT, PTF-FEP-H35171, WELDED PIPE ATTCHMT		1	
14	PIPE SUPT, WS-A-B1-84.0-12-C		1	

STRESS REVIEW PRINT		REV
☐ ACCEPTED	☐ NOT ACCEPTED	
☐ ACCEPTED W/ COMMENTS	☒ SUPPORTS ADDED TO MODEL BY:	
STRESS ANALYST:	DATE:	

RIVER PROTECTION PROJECT
WASTE TREATMENT PLANT
2435 STEVENS CENTER PLACE
RICHLAND, WA 99354

CONTRACT No: DE-AC27-01RV14136

P&ID: 24590-PTF-MS-PCW-00001 | CONST. WORK AREA: 39

PRETREATMENT FACILITY ISOMETRIC

LINE No. FEP-WS-00203-S11C-12 | PIPE SPEC: S11C

DWG No. 24590-PTF-P3-FEP-WS00203001 | REV A

CM QUALITY LEVEL

PAINT CODE	N/A	CONTENT APPLICABLE TO ALARA? ☐ YES ☐ NO	
INSULATION TYPE	NI	ADR NO.	REV.
INSULATION THK.	0	SEISMIC CAT.	SC-IV

COMPUTER GENERATED - MANUAL DESIGN CHANGES NOT PERMITTED

ISO TYPE: PT_xSTRESS C:\iso\24590 PTF-P3 FEP-WS00203001F.DGN

LENGTH (FT.) 32.01 (FOR INFO ONLY) JSM Created: FEB-05-2009 08:23 Iso Created: FEB-05-2009 08:24 PCF File: 24590-PTF-P3-FEP-WS00203001 PLOTTED BY: mmercier PLOT DATE: 02/05/2009 08:27:39 AM SHT 1 OF 1

24590-PTF-3PS-MEVV-T0001 Rev. 3

Pg V-249 of V-249

COMPUTER GENERATED - MANUAL DESIGN CHANGES NOT PERMITTED

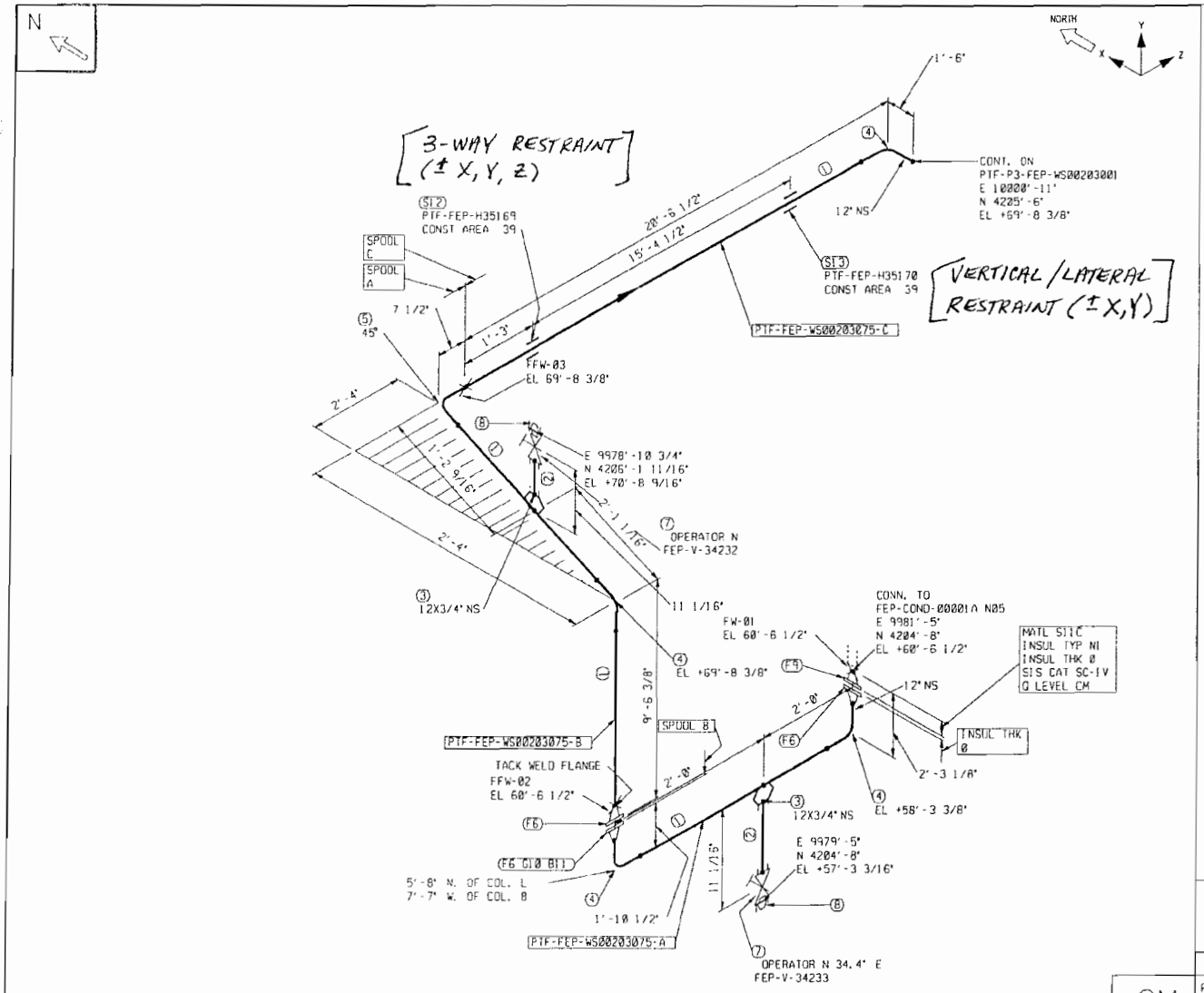

NOTES:

1. FOR GENERAL NOTES AND LEGEND SEE DWG. 24590-WTP-PO-50-00001001.

SHOP MATERIALS

PART NO	COMPONENT DESCRIPTION	N.S. (INCHES)	QTY	BECHTEL STK CODE
	PIPE			
1	PIPE, A312TP316/316L, EFW, SCH 10S, BBE	12	28'11"	PPPC080F0P27
2	PIPE, A312TP316/316L, SMLS, SCH40S, PE	3/4	0'6"	PPPC080G1A0L
	FITTINGS			
3	SOCKOLET, A182-F316*, CL3000	12X3/4	2	PFLSX7401P92
4	EL - 90, LR, BW, A403WP316/316L-W, SCH 10S	12	4	PFGN4X0F1A0N
5	EL - 45, LR, BW, A403WP316/316L-W, SCH10S	12	1	PFRN4X0F1B0N
	FLANGES			
6	FLGWN, A182-F316/316L, CL150, SCH40S, RF, STDFF, B16.5	12	3	PFFWX71G5Y0D
	VALVES / IN-LINE ITEMS			
7	VLV-GT, SLDWDGRS, A182F316L, CL800, SW, FNPT, API602088, TRM12, HW	3/4	2	PVVGUY80R001

FIELD MATERIALS

PART NO	COMPONENT DESCRIPTION	N.S. (INCHES)	QTY	BECHTEL STK CODE
	FITTINGS			
8	PLUG S/HD, MNPT, A182F316L	3/4	2	PFTKUY000F0J
	FLANGES			
9	FLGWN, A182-F316/316L, CL150, SCH40S, RF, STDFF, B16.5	12	1	PFFWX71G5Y0D
	GASKETS			
10	GASKET, SPWND, 316L-FG, 1/8"SS, CL150, B16.20, B16.5	12	2	PGGC2W100G0C
	BOLTS			
11	0.875 X 4.75 BOLT, STDBLT, A193B8-2/8	7/8	24	FBBS5Y000029
	SUPPORTS			
12	PIPE SUPT, PTF-FEP-H35169, WELDED PIPE ATTCHMT		1	
13	PIPE SUPT, GS-A-4D-48.0-12		1	

AREVA MODEL

STRESS REVIEW PRINT		REV	
☐ ACCEPTED	☐ NOT ACCEPTED		
☐ ACCEPTED W/ COMMENTS	☐ SUPPORTS ADDED TO MODEL BY:		
STRESS ANALYST:		DATE:	

RIVER PROTECTION PROJECT
WASTE TREATMENT PLANT
2435 STEVENS CENTER PLACE
RICHLAND, WA 99354

CONTRACT No: DE-AC27-01RV14136

P&ID: 24590-PTF-M6-PCW-00001 | CONST. WORK AREA: 39

PRETREATMENT FACILITY ISOMETRIC

LINE No. FEP-WS-00203-S11C-12 | PIPE SPEC: S11C

DWG No. 24590-PTF-P3-FEP-WS00203075 | REV A

CM QUALITY LEVEL

PAINT CODE	N/A	CONTENT APPLICABLE TO ALARA? ☐ YES ☐ NO
INSULATION TYPE	NI	ADR NO. REV.
INSULATION THK.	0	SEISMIC CAT. SC-IV

ISO TYPE PT_xSTRESS C:\Documents and Settings\mmercier\Local Settings\Temporary Internet Files\OLK2\24590-PTF-P3-FEP-WS00203075.DGN

LENGTH (FT.) 45.85 (FOR INFO ONLY) JSM Created: FEB-09-2009 11:12 Iso Created: FEB-09-2009 11:13 PCF File: 24590-PTF-P3-FEP-WS00203075 PLOTTED BY: mmercier PLOT DATE: 02/09/2009 11:37:44 AM SHT 1 OF 1