ISSUED BY RPP-WTP PDC

R11298346

BECHTEL	**MECHANICAL DATA SHEET** **HOP HEPA PREHEATER**	**PLANT ITEM No.** **24590-HLW-ME-HOP-HTR-00002A** **24590-HLW-ME-HOP-HTR-00001B** **24590-HLW-ME-HOP-HTR-00005A** **24590-HLW-ME-HOP-HTR-00005B** **Data Sheet Number**: **24590-HLW-MED-HOP-00013** **Rev**: **4**

Project:	RPP-WTP	Description:	HOP HEPA Filter Preheaters
Project No:	24590	Specification:	24590-HLW-3PS-MEE0-T0001
Site:	Hanford, WA	P&ID:	24590-HLW-M6-HOP-00010 24590-HLW-M6-HOP-20010
Process flow diagram:	24590-HLW-M5-V17T-00003 24590-HLW-M5-V17T-20003	Calculation Ref. No's.	24590-HLW-MEC-HOP-00012 24590-HLW-M4C-HOP-00011 24590-HLW-Z0C-30-00035

Reference Data

	Offgas Pressure Boundary (Note 5)	C5 Cell Confinement Boundary (Note 6)	Heating Elements	Control Panel	Preheater Temperature Instruments (TE & TT)		
					Inlet Offgas	Outlet Offgas	Housing
Quality Level	Q	Q	Q (AP)	Q (AP)	Q (AP)	Q (AP)	Q
Seismic Category	SC-I	SC-I	SC-I	SC-I	SC-I	SC-I	SC-I
Performs Air Permit (AP) Function	Yes	Yes	Yes	Yes	Yes	Yes	Yes
Design Code	ASME VIII, Div 1 and ASME AG-1	See Specification	See Specification	See Specification	See Specification	See Specification	See Specification
Code Stamp	No	No	No	No	No	No	No
NB Registration	No	No	No	No	N/A	N/A	N/A
Temperature Sensor Type	N/A	N/A	Internal Thermocouple	N/A	RTD	RTD	RTD

Process Conditions Data

Fluid Name		HOP Offgas		
Process Data	Process Conditions	Minimum	Normal	Maximum
Mass Flow	lb/hr	4,894	6,081	6,955
Density @ Inlet / Outlet	lb/ft³	0.0615 / 0.0568	0.0567 / 0.0522	0.0523 / 0.0480
Viscosity @ Inlet / Outlet	cP	0.0184 / 0.0194	0.0187 / 0.0196	0.0188 / 0.0197
Vol. Flow Rate @ 68°F, 1 atm.	SCFM	1,103	1,393	1,635
Vol. Flow Rate @ Inlet / Outlet	ACFM	1,320 / 1,436	1,774 / 1,940	2,203 / 2,415
Pressure @ Inlet / Outlet	in-w.c.	345 / 343	334 / 332	326 / 323
Differential Pressure	in-w.g.	-1.3	-1.9	-2.4
Temperature @ Inlet / Outlet (min. ΔT = 36°F, see Note 8)	°F	84 / 120	105 / 141	124 / 160
Relative Humidity @ Inlet / Outlet	%	100 / 33.8	100 / 36.5	100 / 38.7
Inlet Velocity	ft/s	*	54 (calculated)	67
Heat Capacity	Btu/lb-°F	0.246	0.253	0.263
Thermal Conductivity @ Inlet / Outlet	Btu/hr-ft-°F	0.0149 / 0.0158	0.0153 / 0.0161	0.0155 / 0.0164
Heater Power Duty	kW (Btu/hr)	12.69 (43,306)	16.22 (55,340)	20 (68,304)

	MECHANICAL DATA SHEET **HOP HEPA PREHEATER**	PLANT ITEM No. 24590-HLW-ME-HOP-HTR-00002A 24590-HLW-ME-HOP-HTR-00001B 24590-HLW-ME-HOP-HTR-00005A 24590-HLW-ME-HOP-HTR-00005B	
		Data Sheet Number	Rev
		24590-HLW-MED-HOP-00013	4

Mechanical / Process Design Data

Minimum Operating Pressure	psig	-6
Maximum Operating Pressure	psig	0
Maximum Operating Temperature	°F	167
Temperature Rise (ΔT Inlet-Outlet)	°F	36
Design Flow Rate (@ 68 °F, 1 atm.)	SCFM	2,000
Design Heater Duty	kW / (Btu/hr)	25 (85,000)
Maximum Operating Pressure Drop	in.-w.g.	5
Corrosion/Erosion Allowance	inch	0.04 over 40 years (for components in contact with the offgas)
Hydro/Pneumatic Test Pressure	psig	6.6*
Insulation Type		ASTM C 592 / ASTM C 612
Insulation Thickness	inch	1.5*
Heating Element Type		Cartridge*
Total Number of Heating Elements		45*
Max Element Surface Temperature	°F	500*
Max Element Pocket Surface Temperature	°F	500
Max Element Failure (Note 3)	%	25
Single Element Mean Time to Failure	hours	43,800*
Thermal Cycling, Min to max temp	cycles/year	6 (Note 7)
Fouling Resistance	hr-ft²-°F / Btu	None
Max Concrete Interface Temperature	°F	Note 4

Thermal Analysis Data

Room Temperature R5/C5 (normal high)	°F	113	Concrete Wall Thickness	inches	48
Room Temperature R2/C2 (normal high)	°F	80	Thermal Conductivity of Concrete Wall	W / m / K	1.8
Maximum Heat Loss to R5/C5 Room	kW	3	Maximum Heat Loss to R2/C2 Room	kW	2

Material Data

Plenum	316L Stainless Steel	In-Cast Liner	ASTM A 36 Carbon Steel
Element Pockets	316L Stainless Steel	Gaskets	ASTM D 1418 EPDM Rubber
Shield Plate	ASTM A 36 Carbon Steel	Heating Elements	Inconel / Incoloy Sheath
Mounting Frame	ASTM A 36 Carbon Steel	Insulation	Per 24590-WTP-3PS-NN00-T0001
Bolting	ASTM A 193 B8M / ASTM A 194 8M		

	MECHANICAL DATA SHEET **HOP HEPA PREHEATER**	PLANT ITEM No. 24590-HLW-ME-HOP-HTR-00002A 24590-HLW-ME-HOP-HTR-00001B 24590-HLW-ME-HOP-HTR-00005A 24590-HLW-ME-HOP-HTR-00005B	
		Data Sheet Number	Rev
		24590-HLW-MED-HOP-00013	4

Construction Data

(To be determined by the supplier when not specified by the buyer)

Inlet (Size/Connection Type)		inch	10" Sch 10S	Butt Weld	
Outlet (Size/Connection Type)		inch	12" Sch 10S	Butt Weld	
Size (L x W x H)*		inch	Note 2		
Available Element Pull Space		inch	48		
Weight	lb	20,700*	Shipping Weight	lb	22,700*

Notes

Note 1. Items identified with an asterisk * are determined by the Vendor, and to be verified by the Vendor.

Note 2. The bounding dimensions and nozzle locations shall be in accordance with the sketch on page 4 of this data sheet.

Note 3. The maximum element failure is the percent of total elements that can fail and still achieve maximum design heater duty without exceeding the maximum element pocket surface temperature.

Note 4. All heater components, in-cast liner, and mounting frame in contact with concrete shall not exceed 150 °F under any operating scenario. Concrete within 3 feet of the equipment shall not exceed 150 °F and 100 °F beyond three feet. Vendor is responsible for insulation design to comply with this requirement.

Note 5. The pressure boundary for the Preheater consists of the heater plenum, element pockets, and thermowells.

Note 6. The C5 Cell Confinement Boundary consists of the in-cast liner, mounting frame, and R5/C5 to R2/C2 radiation shielding.

Note 7. Thermal Cycling frequency basis is once every two (2) months throughout the 40 years life of the facility.

Note 8. Heater duty shall be rated such that a minimum inlet-outlet temperature differential of 36°F (20°C) will be achieved after the HOP offgas pass through the Preheater.

References

(1) 24590-HLW-M6-HOP-00010
(2) 24590-HLW-M6-HOP-20010
(3) 24590-HLW-MEC-HOP-00012
(4) 24590-HLW-M4C-HOP-00011
(5) 24590-QL-POA-MEE0-00001-02-00001
(6) 24590-HLW-MAC-C5V-00009
(7) 24590-HLW-U0D-W16T-00001
(8) 24590-HLW-M5-V17T-00003
(9) 24590-HLW-M5-V17T-20003
(10) 24590-HLW-Z0C-30-00035
(11) 24590-HLW-3PS-MEE0-T0001

BECHTEL	**MECHANICAL DATA SHEET** **HOP HEPA PREHEATER**	**PLANT ITEM No.** **24590-HLW-ME-HOP-HTR-00002A** **24590-HLW-ME-HOP-HTR-00001B** **24590-HLW-ME-HOP-HTR-00005A** **24590-HLW-ME-HOP-HTR-00005B** **Data Sheet Number**: **24590-HLW-MED-HOP-00013** **Rev**: **4**

Sketch of HOP HEPA Filter Preheater

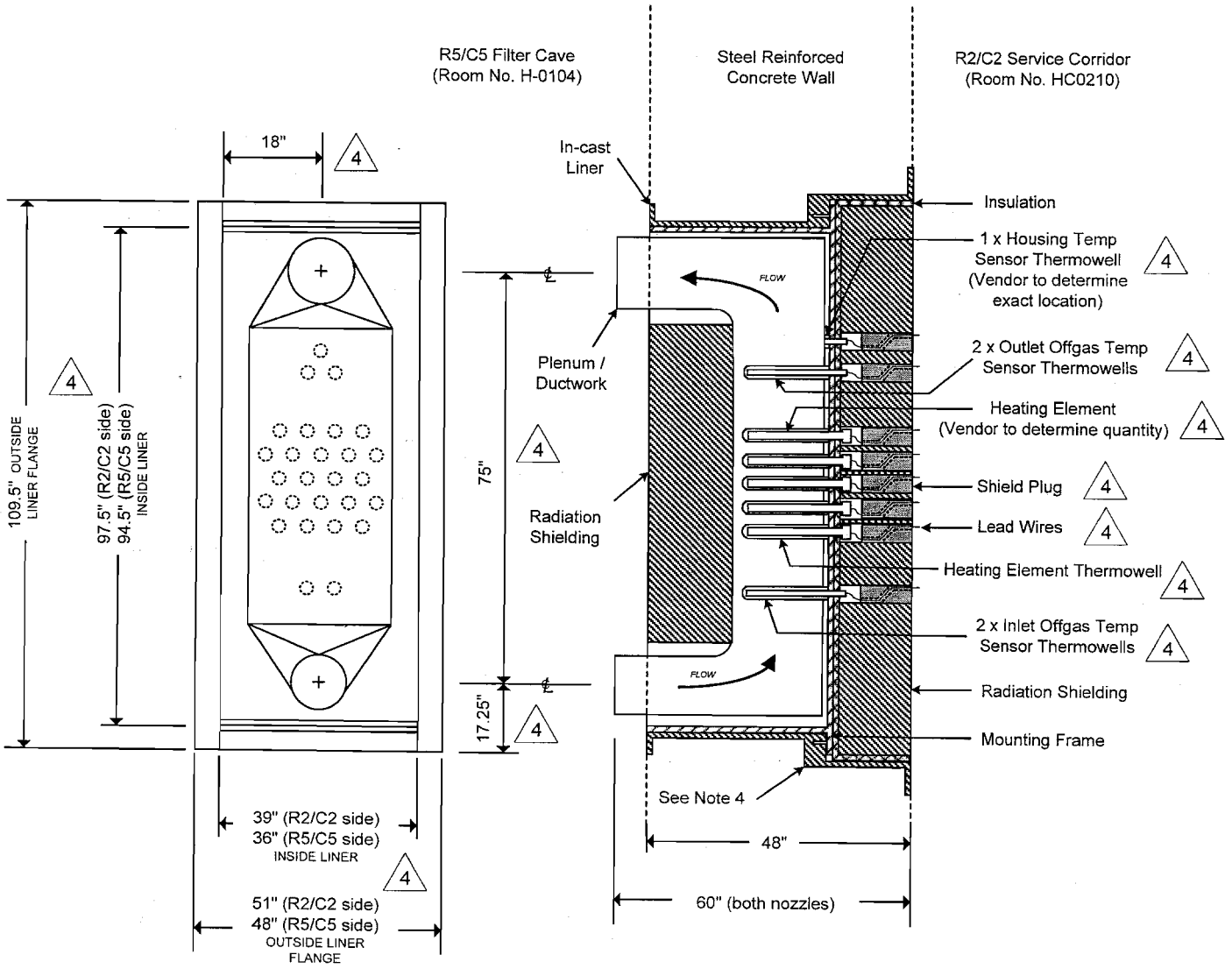

N.T.S.

Front View
(shielding removed)

Cross-Section
View

Sketch of Shield Plug

4

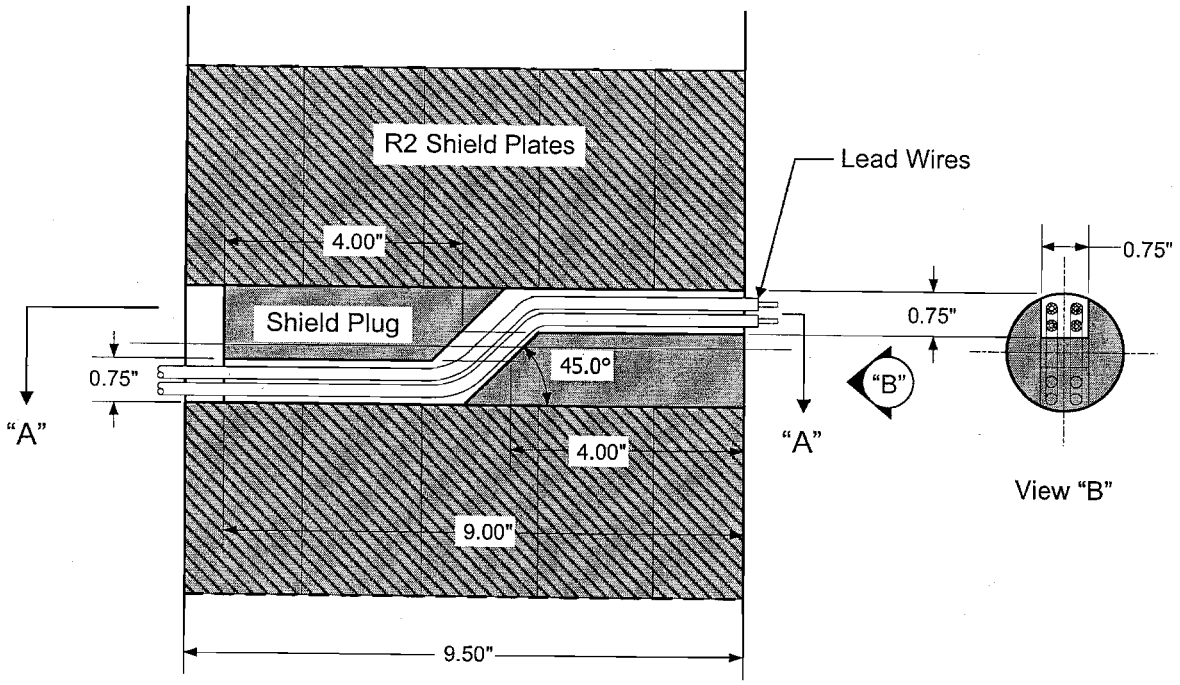

Elevation (Section)

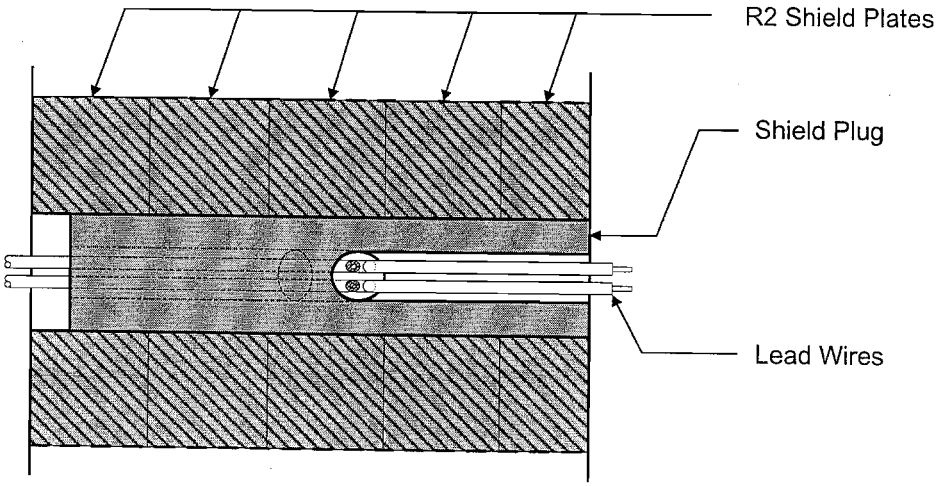

N.T.S.

Section "A - A"

EQUIPMENT QUALIFICATION DATASHEET (EQD)

Equipment Identification

Full Component Tag Number or BNI Stock Code Number	24590-HLW-ME-HOP-HTR-00001B 24590-HLW-ME-HOP-HTR-00002A 24590-HLW-ME-HOP-HTR-00005A 24590-HLW-ME-HOP-HTR-00005B	Safety Classification ☒ SC ☒ SS ☐ APC-PAM
Equipment Datasheet Number	24590-HLW-MED-HOP-00013	
Description	HOP HEPA Preheaters Manufacturer / Supplier : Ellis & Watts International, Inc. Requisition No.: 24590-QL-MRA-MEE0-00001	Seismic Category ☒ SC-I ☐ SC-II ☐ SC-III ☐ SC-IV ☐ SC-III Seismic Interaction only See Page 1 - Mechanical Data Sheet
Location (Facility / Building and Room No.)	HLW Facility / @ EL. 14'-0"/ Preheaters located in filter cave wall between R5/C5 Filter Cave (Room No. H-0104) and R2/C2 Corridor (Room No. HC0210). Associated control panels located in the R2/C2 Corridor (Room No. HC0210). See Note 14, and Drawing No. 24590-HLW-P1-P23T-00208, *HLW Vitrification Building Equipment Location Plan EL. 14'-0" / Area 208*	

Safety Function(s) / PDSA Reference		
	1. Control and lower the relative humidity of the melter offgas, to protect the downstream HEPA filters from becoming saturated with moisture. (SS)	3.4.1.8, 4.4.3
	2. Provide primary confinement of radioactive materials during normal operations and accident conditions. The preheaters are part of the offgas pressure boundary. (SS)	3.4.1.8, 3.4.1.10, 4.4.3
	3. Provide secondary confinement of aerosols during normal, abnormal, and accident conditions. The preheaters are part of the C5 boundary. (SC)	3.4.2.1, 4.3.20
	4. Ensure the HEPA filters, filter housing, and the concrete around the preheater housing is not damaged and the preheater housing is not failed due to overheating. (SC)	3.3.5.4, 3.4.1.9, 4.3.4

Equipment Safety Function Type	☒ Passive Mechanical	☐ Active Mechanical	☐ Electrical
Seismic Safety Function ☒ Yes ☐ No	Seismic Operability Requirements ☐ During Seismic Event	☐ After Seismic Event	☒ None

Equipment Environmental Qualification (EEQ)

(Parameter values stated in this section do not include process conditions or operation induced conditions)

Classification of Environment ☒ Mild ☐ Harsh
Room No. HC0210 Contamination Class: C2 Radiation Class: R2
Room No. H-0104 Contamination Class: C5 Radiation Class: R5

Qualified Life (years) ☒ 40 ☐ Other

Parameter Type/Units	Parameter Value Rm. No. HC0210	Parameter Value Rm. No. H-0104	Parameter Duration (number)	Duration Units	WTP Source Document Number
Normal Ambients					
High Temperature (°F)	80	113	Note 18	Years	24590-HLW-U0D-W16T-00001
Low Temperature (°F)	66	59	Note 19	N/A	24590-HLW-U0D-W16T-00001
High Relative Humidity (%RH)	100	100	Note 20	N/A	24590-HLW-U0D-W16T-00001
Low Relative Humidity (%RH)	10	5	Note 20	N/A	24590-HLW-U0D-W16T-00001

EQUIPMENT QUALIFICATION DATASHEET (EQD)

Parameter Type/Units		Parameter Value: Rm. No. HC0210	Parameter Value: Rm. No. H-0104	Parameter Duration (number)	Duration Units	WTP Source Document Number
Normal Ambients						
High Pressure (in.-w.g.)		0	0	Note 21	N/A	24590-HLW-U0D-W16T-00001
Low Pressure (in.-w.g.)		-0.1	-1.4	Note 21	N/A	24590-HLW-U0D-W16T-00001
Radiation Dose Rate (mRad/hr)	Rm. No. HC0210	0.5	-	40	Years (Note 22)	24590-HLW-U0D-W16T-00001
	Rm. No. H-0104	-	35400	40		
Plant/Process Induced Vibration		☐ Yes ☒ No				
Additional Normal Ambient Information		N/A				
Abnormal Ambients						
High Temperature (°F)		148	126	8	hours / year	24590-HLW-MAC-C5V-00009
Low Temperature (°F)		40	40	Note 19	N/A	24590-HLW-U0D-W16T-00001
High Relative Humidity (%RH)		100	100	Note 20	N/A	24590-HLW-U0D-W16T-00001
Low Relative Humidity (%RH)		4	6	Note 20	N/A	24590-HLW-MAC-C5V-00009
High Pressure (in.-w.g)		4	4	Note 21	N/A	24590-HLW-U0D-W16T-00001
Low Pressure (in.-w.g)		-6.7	-6.7	Note 21	N/A	24590-HLW-U0D-W16T-00001
Radiation Dose Rate (mR/hr)	Rm. No. HC0210	0.5	-	0	Years (Note 22)	24590-HLW-U0D-W16T-00001
	Rm. No. H-0104	-	35400	0		
Exposure to Wet Sprinkler System	Rm. No. HC0210	Yes	-	2	hours	24590-HLW-U0D-W16T-00001
	Rm. No. H-0104	-	No	N/A		
Additional Abnormal Ambient Information		N/A				
Design Basis Events (DBE) Ambients						
High Temperature (°F)		115	135	1000	hours	24590-HLW-MAC-C5V-00009
Low Temperature (°F)		40	40	Note 19	N/A	24590-HLW-U0D-W16T-00001
High Relative Humidity (%RH)		100	100	1000	hours	24590-HLW-U0D-W16T-00001
Low Relative Humidity (%RH)		10	6	1000	hours	24590-HLW-MAC-C5V-00009
High Pressure (in.-w.g)		4	4	1000	hours	24590-HLW-U0D-W16T-00001
Low Pressure (in.-w.g)		-6.7	-6.7	1000	hours	24590-HLW-U0D-W16T-00001
Radiation Dose Rate (mR/hr)	Rm. No. HC0210	0.5	-	0	hours	24590-HLW-U0D-W16T-00001
	Rm. No. H-0104	-	35400	0		
Submergence	(see Note 17, flood height)	Yes	Yes	1000	hours	24590-HLW-U0D-W16T-00001
Chemical/Spray Exposure	Rm. No. HC0210	No	-	12.5	hours	24590-HLW-U0D-W16T-00001
	Rm. No. H-0104	-	No	N/A		
Additional DBE Information		N/A				

DBE Chemical Exposure Details	
DBE Chemical Types / Concentrations	None

EQUIPMENT QUALIFICATION DATASHEET (EQD)

Electrical Interfaces Supporting the Safety Function (see Note 13)	
Power Supply Voltage (VAC, VDC)	480V AC 3-Phase, 120V AC 1-Phase, and 120V AC 1-Phase (UPS)
Power Supply Frequency (Hz)	60 Hz
Power Connection Method	Fusible Disconnect in NEMA 4 Enclosure
I/O Signals to/from Equipment	Remote On/Off via discrete I/O. Inlet, outlet and housing temperature reading via 4-20 mA analog
I/O Connection Method	Terminal Blocks / Strip in NEMA 4 Enclosure

Mechanical Interfaces	
Mounting Configuration (orientation)	Vertical, thru-wall
Mounting Method (bolts, welds, etc.)	See Note 11
Auxiliary Devices	None

Equipment Seismic Qualification (ESQ)

Parameter	Title	Reference/Document Number	Version / Revision	Remarks
WTP Seismic Design Specification	Engineering Specification for Seismic Qualification of Seismic Category I/II Equipment and Tanks	24590-WTP-3PS-SS90-T0001	2	N/A
Specified Seismic Load Parameters	HLW Vitrification Building Seismic Analysis - In-Structure Response Spectra (ISRS)	24590-HLW-S0C-S15T-00009	E	use ISRS figure 46, 47, 48, 73, 74, and 75 per CCN 177700

Equipment Qualification Notes and Additional Information

Note 9. Qualification data to be provided by SELLER through the submittal process as required on G-321-E.

Note 10. Where pressure is given in inches of water column (in-w.c.) in the source document, it is generally assumed that this is in reference to atmospheric pressure and is therefore equivalent to inches of water gauge (in-w.g.).

Note 11. Liner cast into concrete wall. Plenum and shield plates are bolted to the liner.

Note 12. Not used.

Note 13. Electrical interfaces supporting the safety function provided in the R2/C2 corridor (Rm. No. HC0210) only. There is no electrical interface for the preheaters on the R5/C5 filter cave (Rm. No. H-0104) side.

Note 14. Through-wall equipment subject to HC0210 room environment on one side and H-0104 room environment on the other.

Note 15. Environment is "Mild" if equipment remains within manufacturer's rated environmental capability. If not, environment is "Harsh".

Note 16. Contents of this document are Dangerous Waste Permit affecting.

Note 17. Flood height is 1.58 ft. in Rm. No. H-0104 and HC0210 per 24590-HLW-U0D-W16T-00001. SELLER's design shall provide the option of connecting freestanding control panel enclosure to the concrete floor through a direct bolted connection using a steel transfer frame of 22" high, i.e. approximately 0.25 ft. above the flood height level. The purpose of the transfer frame is to allow up to 2" location tolerance of the attachment anchors/bolts to the building to prevent the cutting of rebar in the structure and to utilize existing steel embed in the floor. Seismic qualification including the transfer frame and anchors/ bolts shall be performed as required by the relevant specification in the Purchase Order.

Equipment Qualification Notes and Additional Information

Note 18. For thermal aging, the high normal temperature shall be assumed to subsist for 40 years less the duration of the high abnormal temperature. For any lesser qualified life, the normal and abnormal condition durations shall be assigned proportionally. The abnormal temperature is stated to subsist for a certain number of hours per year. It shall be taken to subsist for this number of hours for each year of the qualified life.

Note 19. The ability to provide the safety function at the low normal temperature, the low abnormal temperature or the low DBE temperature (whichever be the lowest) shall be established by test, analysis, or operating experience. The thermal aging at these respective low temperatures will be conservatively covered by the thermal aging per Note 18 above. Therefore, no duration is assigned for the low temperatures.

Note 20. The ability to provide the safety function at the extremes of the normal and abnormal humidity conditions, taking into consideration the high and the low normal and high and low abnormal, shall be established by test, analysis, or operating experience. No duration is assigned for the normal and abnormal humidity conditions.

Note 21. If the performance of the safety function of the equipment is affected by ambient pressure, the ability to provide the safety function at the extremes of the normal and abnormal pressure conditions, taking into consideration the high and the low normal and the high and low abnormal pressures, shall be established by test, analysis, or operating experience. No duration is assigned to the normal and abnormal pressure conditions.

Note 22. (1) If the abnormal radiation dose rate is the same as the normal radiation dose rate, the normal radiation dose rate shall be assumed to subsist for 40 years, or any lesser qualified life, and the duration of the abnormal radiation dose rate is "0."

(2) If the abnormal radiation dose rate is higher than the normal radiation dose rate, the abnormal radiation dose rate shall be assumed to subsist for 40 years, or any lesser qualified life, and the duration of the normal radiation dose rate is "0."

Note 23. The DBE conditions shall be taken to subsist for the stated number of hours following the qualified life of the equipment.

Note 24. Spray due to fire sprinkler actuation shall be taken to occur once over the entire qualified life duration for a period of 2 hours, even if the qualified life is a period less than 40 years. If spray qualification is provided for DBE conditions (whether for water or chemical spray), then separate qualification for the fire sprinkler spray need not be provided.

Note 25. The values stated in this EQD are the ambients and do not include the thermodynamic and radiation conditions imposed by the process fluids, self-heating, etc. The data pertaining to process fluid and service induced parameters are to be taken into account where significant, such as in thermal aging analyses. These data can be obtained from the equipment data sheets or the Equipment Specification.

Note 26. Equipment that is to be installed in inaccessible locations must be qualified to a 40-year life without the need for maintenance or replacement.

DOE Radioactive Materials Disclaimer:

Please note that source, special nuclear and byproduct materials, as defined in the Atomic Energy Act of 1954 (AEA), are regulated at the US Department of Energy (DOE) facilities exclusively by DOE acting pursuant to its AEA authority. DOE asserts, that pursuant to the AEA, it has sole and exclusive responsibility and authority to regulate source, special nuclear, and byproduct materials at DOE-owned nuclear facilities. Information contained herein on radionuclides is provided for process description purposes only.

Revision History

Rev	Description	System Engr	Equip Engr	Checked	Reviewed	E&NS	Approved	Date
4	Updated Mech Data Sheet Reference Data. Removed safety designations. Revised preheater sketch, added sensor thermowells and shield plugs. Added sketch of shield plug. Updated EQ Data Sheet using current EQD form (Rev 4). Added Notes 17 to 26. Re-issued for Purchase.	Mike O'Neill	Bernard Ip	James Krogness	Aaron Bronner	Chris Meng	Tom Hughes	11/11/10
3	General revision of Mech Data Sheet per updated References. Revised preheater sketch and added additional inlet/outlet thermowells. Added EQ Data Sheets. Incorporated 24590-WTP-M6N-M80T-00005. Re-issued for Purchase.	Mike O'Neill	Bernard Ip	James Krogness	Aaron Bronner	Chris Meng	John Julyk	8/5/09
2	Revised Quality Level for Offgas Pressure Boundary, Heating Elements & Control Panel to QL-1 and incorporated submittal 24590-QL-POA-MEE0-00001-02-00001	J Rouse	A. Cutrona	S Jain	Will Eaton	--	John Julyk	8/26/05
1	Issued for Flow & Thermal Analysis Data Revisions	J. Rewari	A. Cutrona	R. Tometczak	Jim Rouse	--	Eric Isern	3/8/05
0	Issued for Purchase	Jason Medina	A. Cutrona	Jagdish Rewari	D. Yarbrough	--	Eric Isern	5/26/04