R11444558

LAW and HLW Facility Crane Logic Descriptions for the WTP Dangerous Waste Permit

Document title: LAW and HLW Facility Crane Logic Descriptions for the WTP Dangerous Waste Permit

Document number: 24590-WTP-PER-ENS-11-001, Rev 0

ISSUED BY RPP-WTP PDC

Contract number: DE-AC27-01RV14136

Department: Environmental and Nuclear Safety

Author(s): T. Hawkins, W. Jaquish, D. Robertson

Checked by: D. Barton

Issue status: Issued for Permitting Use

Approved by: M. Braccia

Approver's position: Project Engineering Manager, HLW

Approver's signature: _____ Signature 11-28-11 Date

Approved by: T. Hughes

Approver's position: Project Engineering Manager, LAW

Approver's signature: _____ Signature 11/29/11 Date

River Protection Project
Waste Treatment Plant
2435 Stevens Center Place
Richland, WA 99354
United States of America
Tel: 509 371 2000

This bound document contains a total of 44 sheets.

Notice

Please note that source, special nuclear, and byproduct materials, as defined in the Atomic Energy Act of 1954 (AEA), are regulated at the US Department of Energy (DOE) facilities exclusively by DOE acting pursuant to its AEA authority. DOE asserts, that pursuant to the AEA, it has sole and exclusive responsibility and authority to regulate source, special nuclear, and byproduct materials at DOE-owned nuclear facilities. Information contained herein on radionuclides is provided for process description purposes only.

History Sheet

Rev	Reason for revision	Revised by
0	Initial issue narrative description to meet Condition III.10.C.15.a.ii.	T. Hawkins

Contents

1 Introduction 1

2 LAW Cranes 1

2.1 Design and Operations - LAW Container Cranes 1
2.1.1 LAW Buffer Store Crane (LPH-CRN-00002) 1
2.1.2 LAW Export Crane (LEH-CRN-00003) 4
2.1.3 Key Design Features 7

2.2 LAW Crane Control 10
2.2.1 LAW Integrated Control Network and LAW Crane Control Room 10
2.2.2 Local Crane Control 11
2.2.3 Software 11

2.3 LAW Container Grapple 11

3 HLW Cranes 12

3.1 Design and Operations - HLW High Integrity Cranes 13
3.1.1 HLW Canister Handling Cave Cranes HPH-CRN-00001 and HPH-CRN-00002 13
3.1.2 HLW Decontamination Cave Crane HDH-CRN-00005 17
3.1.3 HLW Canister Storage Cave Crane HEH-CRN-00003 20
3.1.4 HLW Melter Cave Main Cranes HSH-CRN-00001 and HSH-CRN-00014 23
3.1.5 Key Design Features 26

3.2 Design and Operations - HLW Cask Handling Crane 28
3.2.1 HLW Truck Bay Cask Handling Crane HEH-CRN-00001 28
3.2.2 Key Design Features 30

3.3 HLW Crane Control 32
3.3.1 HLW Integrated Control Network and HLW Crane Control Room 32
3.3.2 Local Crane Control 33

3.4 HLW Canister Grapple 33

4 Applicable Documents 35

Figures

Figure 1 LAW Buffer Store Crane (LPH-CRN-00002) 2
Figure 2 LAW Export Crane (LEH-CRN-00003) 5
Figure 3 LAW Container Grapple 12
Figure 4 HLW Canister Handling Cave Cranes (HPH-CRN-00001 and HPH-CRN-00002) 14
Figure 5 HLW Decontamination Cave Crane (HDH-CRN-00005) 18
Figure 6 HLW Canister Storage Cave Crane (HEH-CRN-00003) 21
Figure 7 HLW Melter Cave Cranes (HSH-CRN-00001 and HSH-CRN-00014) 24
Figure 8 HLW Cask Handling Crane (HEH-CRN-00001) 29
Figure 9 HLW Canister Grapple 34

Acronyms

AEA	Atomic Energy Act
CCR	crane control room
CCTV	closed-circuit television
CDA	crane decontamination area
CMA	crane maintenance area
CMAA	Crane Manufacturers Association of America
DOE	US Department of Energy
DWP	Dangerous Waste Permit
FCR	facility control room
HDH	HLW Canister Decontamination Handling System
HEH	HLW Canister Export Handling System
HLW	high-level waste
HMI	human-machine interface
HPH	HLW Canister Pour Handling System
HSH	HLW Melter Cave Support Handling System
ICN	integrated control network
ILAW	immobilized low-activity waste
LAW	low-activity waste
LEH	LAW Container Export Handling System
LFH	LAW Container Finishing Handling System
LOI	local operator interface
LPH	LAW Container Pour Handling System
MSM	master-slave manipulator
PTJ	Process and Mechanical Handling CCTV System
WTP	Hanford Tank Waste Treatment and Immobilization Plant

1 Introduction

This document is a narrative description related to the safe operation of the low-activity waste (LAW) container and high-level waste (HLW) canister handling cranes at the Hanford Tank Waste Treatment and Immobilization Plant (WTP). The intent is to provide an overview of the purpose, description, and key safety design features for the selected cranes. This document also includes a general overview of the crane control equipment, instrumentation, and capabilities.

This document is prepared in compliance with the WTP Dangerous Waste Permit (DWP) sections III.10.C.15.a.ii.(A) and III.10.C.15.a.ii.(B). Specifically this document addresses two LAW cranes and seven HLW cranes, listed in DWP Condition III.10.C.15.a.i.(B).

LPH-CRN-00002	LAW buffer store crane
LEH-CRN-00003	LAW export crane
HPH-CRN-00001	HLW canister handling cave lower crane
HPH-CRN-00002	HLW canister handling cave upper crane
HDH-CRN-00005	HLW decontamination cave crane
HEH-CRN-00003	HLW storage cave crane
HSH-CRN-00001	HLW melter cave 1 crane
HSH-CRN-00014	HLW melter cave 2 crane
HEH-CRN-00001	HLW cask handling crane

2 LAW Cranes

The LAW Facility produces finished containers through a process by which they are filled with molten glass, sealed with a lid, decontaminated, and readied for shipment. As the containers pass through the facility, they are handled by two dedicated cranes: the LAW buffer store crane (LPH-CRN-00002), part of the LAW container pour handling system (LPH), and the LAW export crane (LEH-CRN-00003), part of the LAW container export handling system (LEH). Both of the LAW container handling cranes are similar in design and function. They are built by the same vendor under the same specification.

A description of the LAW crane controls and container grapple are also included to provide a more complete description.

2.1 Design and Operations - LAW Container Cranes

2.1.1 LAW Buffer Store Crane (LPH-CRN-00002)

The LAW buffer store crane LPH-CRN-00002 is located in L-B025, the LAW buffer storage area (Figure 1). The documents referenced below provide additional design details and operational information for this crane.

- 24590-LAW-3YD-LPH-00001, *System Description for the LAW Container Pour Handling (LPH) System.*
- 24590-LAW-M0D-LPH-00003, *24590-LAW-MJ-LPH-CRN-00002 - Top Running, Double Girder.*
- 24590-LAW-M7-LPH-00001004, *LAW Vitrification System LPH Mechanical Handling Diagram Container Pour Handling System.*

2.1.1.1 Purpose

The primary purpose of the LAW buffer store crane is to transport LAW containers into and out of storage in the buffer storage area, located on elevation -21 ft of the LAW Facility (Figure 1).

Figure 1 LAW Buffer Store Crane (LPH-CRN-00002)

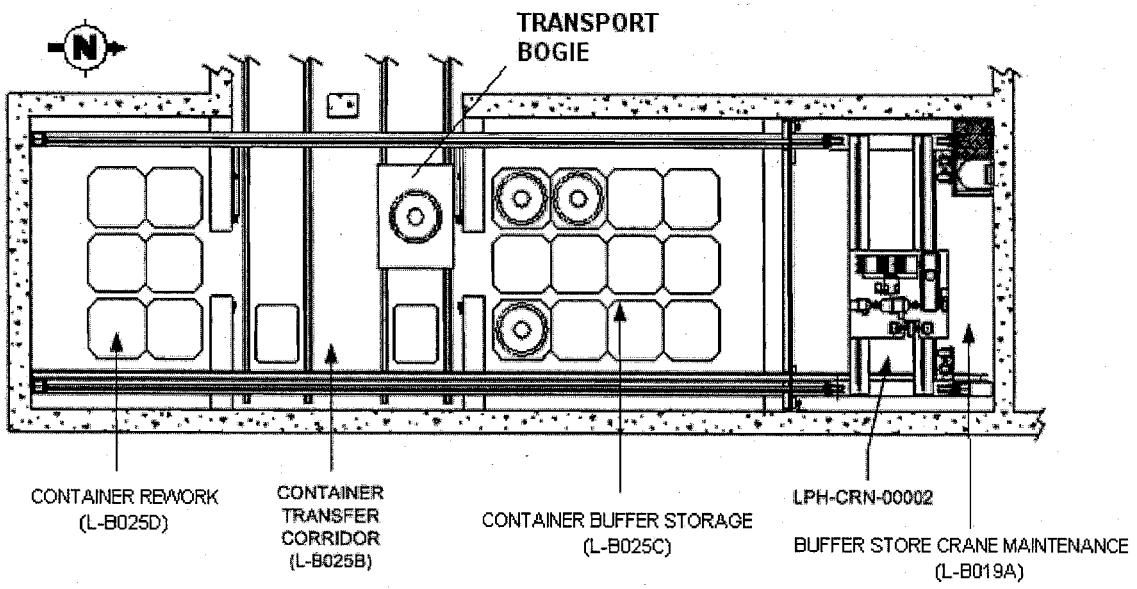

2.1.1.2 Description

The LAW buffer store crane is a remotely operated 10-ton safe working load (rated load) bridge crane. It is classified as a top running, double girder crane (Crane Manufacturers Association of America [CMAA] 70, Class D-Heavy Service) and is designed for a service life of 40 years. The rail runway length is 76 ft and the bridge span is almost 19 ft. The long travel of the crane is in the north/south direction and the cross travel is in the east/west direction. The hook approach to the north wall is 6 ft and to the south wall is 6 ft 2 in. The hook approach to the east wall is 4 ft 1 in. and to the west wall is 3 ft 8 in. The crane has a single hoist with an interchangeable hook or grapple integral to the lower block. The bridge, trolley, and hoist each have a maximum operating speed of 25 ft/min. The crane includes a number of controls and design features to prevent potential damage to itself or other equipment (Sections 2.1.1.4 and 2.1.3). Although the main mode of operation is remotely from the LAW crane control room (CCR), the crane may also be locally operated at the local operating interface (LOI), (Section 2.2.2). There are no tanks or miscellaneous units within the operating path of the buffer store crane.

There are two crane-mounted cameras capable of pan, zoom, and tilt. They are located on the bridge. Four lights are mounted to the underside of the bridge beams.

The LPH system provides all handling operations required to import and export new or filled containers through the LAW pour caves. The functions of the buffer store crane to safely transport containers are described below.

2.1.1.3 Crane Operation

The crane normal operating areas are L-B025B, L-B025C, and L-B025D. Filled immobilized low-activity waste (ILAW) containers arrive at the container buffer store on bogies in the container transfer corridor. If the finishing line is unavailable to retrieve the container, or if the container requires additional cooling, the buffer store crane will place it into the container buffer store.

The buffer store consists of two storage areas intersected by the container transfer corridor. The first storage area is located north of the transfer corridor. This storage area provides space for 12 filled containers in a 3-by-4 array. The second storage area is located south of the transfer corridor and provides storage for six containers. This area also serves as the container rework area. This area is equipped with master-slave manipulator (MSM) penetrations and a shielded glass window to facilitate rework operations. When filled containers are present, personnel entry is not allowed into these areas. There are shield doors that isolate each of these areas and only allow personnel access when the respective doors are closed and the containers removed.

2.1.1.4 Crane Interface Interlocks

The LPH system utilizes control system permissives and interlocks to ensure normal plant operations are kept within the design envelope and to provide protection to major equipment.

Separating the buffer store area (L-B025C) and the container rework area (L-B025D) from the transfer corridor is a half-height wall with an opening. Before the bridge of the buffer store crane can move containers into these areas, the trolley must move to the center position (or "trolley PB" position, see drawing 24590-LAW-M7-LPH-00001003 for further details). A laser-positioning device guides the trolley to the center position.

To prevent collision with the LAW container finishing handling system (LFH) hoists, interlocks prevent the buffer store crane from operating in the container export/storage zone while the system LFH entry trapdoors are open. Interlocks prevent the buffer store crane from colliding with the transport bogie (LPH-TRLY-00001/2) when it is operating in the container export/storage zone. Once the bogie is parked in export position, the buffer store crane can proceed with operations in the export/storage zone to relocate the container, see Figure 1.

The buffer store crane is interlocked with the buffer store crane maintenance shield door (LPH-DOOR-00025) to prevent the crane from entering the crane maintenance area with the door closed, to prevent the door opening when a container is present on the hoist and to prevent the door from closing when the crane is located under the door.

Also see Section 2.1.3 for additional common crane internal interlocks.

2.1.1.5 Crane Recovery

In the event of a mechanical failure of any primary drive, bridge, trolley, or hoist, the buffer store crane is designed to permit an operator to remotely lower any suspended item, and then proceed to remove containers from the room. When buffer store area is occupied with any number of filled containers, the radiation levels would prohibit the entry of personnel to assist with the recovery operation. In order to permit access to the crane sufficient redundancy is necessary to allow the radioactive sources to be removed from the room, therefore the crane incorporates the following design features:

- Independent redundant hoist
- Independent redundant trolley drive train positioned via jacks (when needed)
- Independent redundant bridge drive train positioned via jacks (when needed)

The recovery drive components are actuated and controlled through the crane control panel. If the main trolley drive system is inoperable, the recovery wheels can be lowered on jacks to lift the trolley, engage the recovery drive wheels, and disengage the main drive wheels. A similar recovery system is used on the bridge drive wheels. For the redundant systems, each motor controller has it's own circuit breaker and normal and recovery operation circuitry is separated and isolated.

The buffer store crane trolley is equipped with two separate hoist systems. All normal lifting operations are conducted using the main hoist. In addition, there is a recovery hoist for use in cases of a main hoist failure that will enable the container to be set down and released from the grapple. The recovery hoist is not intended to conduct prolonged repetitive lift cycles, however it maintains sufficient safety features to complete current lifting operations and, if required, remove any residual containers in the buffer store to permit manned access. The main hoist and recovery hoist have independent control systems, each having a motor, gear box and a drum. Interrupting power to the hoist motor will cause the motor to stop and both the primary and emergency brakes to immediately set preventing loads from free-falling.

2.1.1.6 Crane Decontamination and Maintenance

The buffer store crane maintenance area (CMA), L-B019A, is located to the north of the container buffer store area. The maintenance area is separated from the operating areas by a concrete wall and a single vertical shield door. This shielding allows personnel access into the CMA. Given the geometry of the shield door aperture, it is not physically possible to bring a container into the maintenance area. The crane decontamination activities, typically a wipe down, are conducted in the maintenance area.

2.1.2 LAW Export Crane (LEH-CRN-00003)

The LAW export crane LEH-CRN-00003 is located in L-0127, the export high bay (Figure 2). The documents referenced below provide additional design details and operational information for this crane.

- 24590-LAW-3YD-LEH-00001, *System Description for the LEH LAW Container Export Handling.*
- 24590-LAW-M0D-LEH-00014, *24590-LAW-MJ-LEH-CRN-00003 - LEH Crane Export High Bay with Recovery.*
- 24590-LAW-M7-LEH-00002002, *LAW Vitrification System LEH Mechanical Handling Diagram Container Export Handling System.*

2.1.2.1 Purpose

The primary purpose of the LAW export crane is to move finished LAW containers from the finishing line to the transport vehicle in the export high bay. This room is located on elevation 0 ft of the LAW Facility (Figure 2).

Figure 2 LAW Export Crane (LEH-CRN-00003)

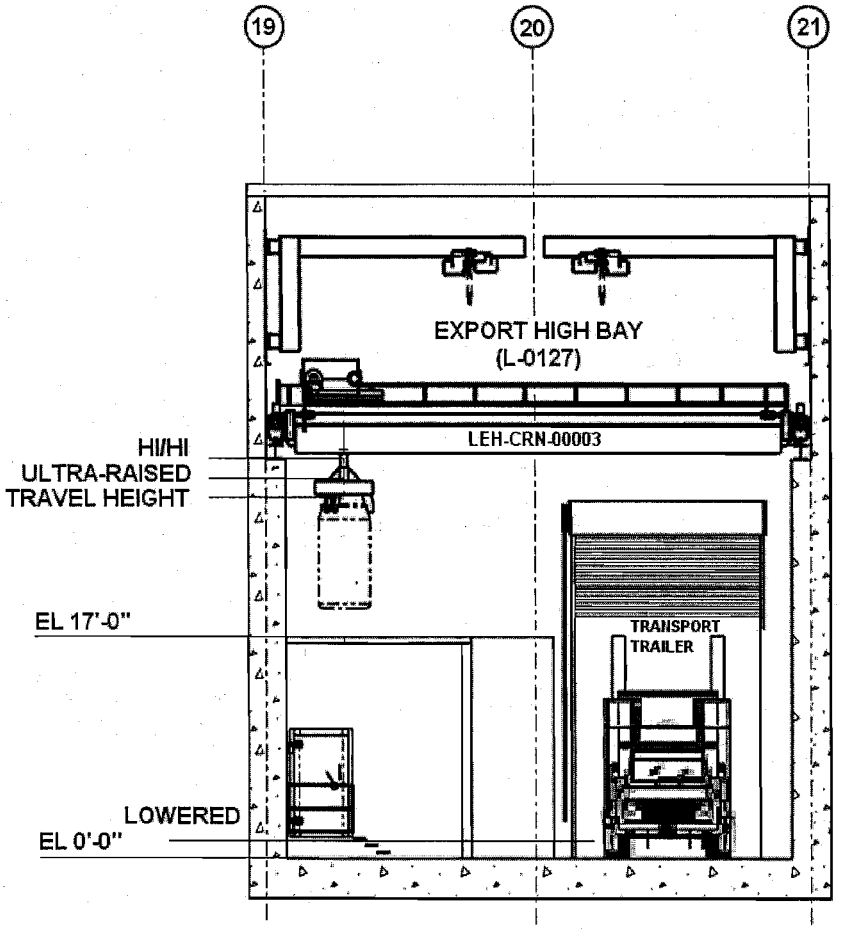

There are two finishing lines where the LAW containers are lidded, decontaminated, and swabbed to measure surface contamination. The containers move through the finishing lines on bogies. Once a container has progressed through the finishing line, the bogie stops in a small concrete-walled room inside the export high bay. There is one such room for each finishing line. On the ceiling of each room is a steel hatch that is opened to allow the export crane grapple to reach into the room and engage the container. The export crane then lifts the container out of the room into the export high bay and onto the transport vehicle.

2.1.2.2 Description

The LAW export crane is a remotely operated 10-ton rated load bridge crane. It is classified as a top running, double girder crane (CMAA 70, Class D-Heavy Service) and is designed for a service life of

40 years. The rail runway length is 79 ft and the bridge span is 40 ft. The long travel of the crane is in the north/south direction and the cross travel is in the east/west direction. The hook approach to the north wall and south wall is 15 ft. The hook approach to the east wall is 7 ft 2 in. and to the west wall is 5 ft 2 in. The crane has a single main hoist with an interchangeable hook or grapple integral to the lower block. The bridge, trolley, and hoist have a maximum operating speed of 25 ft/min. The crane includes a number of controls and design features to prevent potential damage to itself or other equipment (Sections 2.1.2.4 and 2.1.3). Although the main mode of operation is remotely from the LAW CCR, the crane may also be locally operated at the LOI, (Section 2.2.2). There are no tanks or miscellaneous units within the operating path of the export crane.

There are three crane-mounted cameras capable of pan, zoom, and tilt. They are located on the east end truck, the trolley, and on the bridge. Six flood lights are mounted to the underside of the bridge beam.

The crane is installed in the export high bay (L-0127). The two rooms at the end of the finishing line that are within the export high bay are rooms L-0109E and L-0115E.

The LEH export crane moves filled and sealed ILAW product containers from the container finishing line and places the containers on the transport vehicle. The functions of the export crane to safely move and protect containers are described below.

2.1.2.3 Crane Operation

Semi-trucks bring ILAW shipping casks into the export bay. The casks are prepared to receive the containers. The ILAW containers are brought into the export bay on a bogie. The container is removed from the bogie and placed into the shipping cask using the export crane.

When a filled container is being loaded into the cask, personnel entry is not allowed into the export bay. When filled containers are present in the finishing line rooms, personnel access is prohibited. When a filled container is not present, personnel entry is permitted. The export crane is equipped with remote recovery capabilities.

2.1.2.4 Crane Interface Interlocks

The LEH system utilizes control system permissives and interlocks to ensure normal plant operations are kept within the design envelope and to provide protection to major equipment. The ICN is programmed to locate the export crane at each system LFH hatch location and avoid container collisions with the extended height wall.

Also see Section 2.1.3 for additional common crane internal interlocks.

2.1.2.5 Crane Recovery

In the event of a mechanical failure of any primary drive, bridge, trolley or hoist the export crane is designed to permit an operator to remotely lower any suspended item, and then proceed to remove any unshielded containers from the room with the use of redundant drives to allow manned access to trouble shoot and repair the failed primary drive. When export area is occupied with unshielded (or non-casked) containers, the radiation levels will prohibit the entry of personnel to assist with the recovery operation. Personnel will be required to enter through door L-0127-1 to access crane maintenance platform LP0127 to LPH-PNL-00005 for recovery operations. In order to permit access to the crane, sufficient redundancy is necessary to allow the radioactive sources to be removed from the room, therefore the crane incorporates the following design features:

- Independent redundant hoist
- Independent redundant trolley drive train positioned via jacks (when needed)
- Independent redundant bridge drive train positioned via jacks (when needed)

The recovery drive components are actuated and controlled through the crane control panel. The crane control panel is located on a crane maintenance platform on the north wall that is accessed via a ladder. Recovery operations are performed from this platform. If the main trolley drive system is inoperable, the recovery wheels can be lowered on jacks to lift the trolley, engage the recovery drive wheels, and disengage the main drive wheels. A similar recovery system is used on the bridge drive wheels. For the redundant systems, each motor controller has it's own circuit breaker and normal and recovery operation circuitry is separated and isolated.

The export crane trolley is equipped with two separate hoist systems. All normal lifting operations are conducted using the main hoist. In addition, there is a recovery hoist for use in cases of a main hoist failure enabling the container to be set down and released from the grapple. The recovery hoist is not designed for nor is it used for normal service. The main hoist and recovery hoist are independent systems, each having a motor, gear box, drum, hoist motor and hoist drum brakes. Interrupting power to the hoist motor will cause the motor to stop and both the primary and emergency brakes to immediately set preventing loads from falling.

2.1.2.6 Crane Decontamination and Maintenance

There is no crane decontamination room or maintenance room for the export crane. These additional rooms are not required, since the containers are decontaminated before they enter the export bay and personnel entry is permitted when the containers are not present.

2.1.3 Key Design Features

This section describes common key design features of LAW cranes and gives a general description of operating procedures associated with the safe operation of LPH-CRN-00002 and LEH-CRN-00003, as defined in DWP Condition III.10.C.15.a.ii.(A) and (B).

2.1.3.1 Allowed Bridge and Trolley Travel Path

The limit on the allowable travel for the bridge and trolley is controlled by three independent means: a laser-based positioning system, position limit switches, and bumpers that contact rail stops.

The laser-based positioning system uses a time-of-flight technique to monitor the position of the bridge and trolley throughout their complete travel paths. The position data for the bridge and trolley are made available to the Integrated Control Network (ICN).

The bridge has two mechanical/arm-type limit switches to detect the extreme travel limits along the crane rails. When tripped, the limit switches provide an input to the motor controller to disable motion toward the end of the rail. For example, if the switch detects the extreme south travel limit on the bridge, the motor controller will prohibit further travel south and only allow travel north until the switch resets. The trolley motion limits are restricted with a similar design. The status of these limit switches is made available to the ICN.

Both the bridge and trolley are equipped with a bumper which prevents the bridge crane from departing from the extremes of the operational envelope.

2.1.3.2 Upper and Lower Hook Travel Limits

The main hoist and recovery hoist both have over-travel high-limit interlocks. The main hoist has two upper-limit switches and a position encoder. The first upper over-travel limit switch is a mechanical geared-type limit switch. When tripped, the limit switch will provide an input to the motor controller to disable further raising of the load and will only allow lowering of the load. The second over-travel high-limit switch is a mechanical-type switch that will interrupt all power to both the main and recovery hoist motors. A magnetic encoder is used to maintain position of the hook. The status of these limit switches and the encoder value are made available to the ICN.

The recovery hoist has one upper-limit switch that is independent of the main hoist limit switches. This limit switch is similar to the main hoist upper over-travel limit switch, but it restricts operation of the recovery hoist. The status of this switch is made available to the ICN.

The hoist safety circuit consists of a logic relay that monitors hoist high-high conditions. The logic relay must be held in the "on" state in order for the circuit to be energized (thus permitting normal hoist functions). When a fault occurs, the circuit "opens" and power to the main hoist and recovery hoist is interrupted. Further operation of either hoist is not permitted until the fault condition is cleared. When the alarm limit condition is exceeded the main or recovery hoist drive will stop and an amber warning light will illuminate on the control panel. The amber warning light indicates which conditional requirement of the hoist was tripped. Recovery from the tripped condition is by use of a key in the reset key switch located under the illuminated amber light. The key must be turned to reset position which will allow the main or recovery hoist drive to operate in a direction to clear the tripped condition. Once the tripped condition is cleared the hoist can be returned to operation.

The main hoist uses a magnetic encoder to maintain the position of the hook. The encoder communicates its data to the ICN. The ICN will use the encoder data to control the main hoist flux vector drive in order to achieve accurate positioning of the hook. The encoder positioning data is used to create a "soft" upper limit stop point and a "soft" lower limit stop point prior to activation of the mechanical limit switches.

If the redundant hoist is used or periodically tested, then particular attention is required to ensure it's drum is rotated and parked in the same position prior to use, otherwise the encoder associated with the primary hoist would require resetting the datum by slowly raising or lowering the hook/grapple by the primary hoist to a known trip point.

2.1.3.3 Two-Blocking Prevention

Two-blocking occurs whenever the load block comes into physical contact with the trolley frame or upper block (trolley mounted pulleys or drum). Two-blocking can cause the wire rope, rigging, reeving, and other components to become highly stressed and over loaded, in which case the wire rope may fail allowing the load, block, etc., to fall.

Two-blocking prevention is provided by the upper over-travel high hook limits described in Section 2.1.3.2.

2.1.3.4 Hook Load Limits

Load cells are provided on the export crane main hoist and the buffer store crane main and recovery hoists to monitor the hook load weights. The load cell values are displayed on the local control panel and are made available to the ICN. The hoist circuit consists of a logic relay that monitors hoist overload conditions. The logic relays must be held in the "on" state in order for the circuit to be energized (thus permitting normal hoist functions). When a fault occurs, the circuit "opens" and power to the main hoist or recovery hoist (as applicable) is interrupted. The export crane (LEH-CRN-00003) recovery hoist does not have hook load limit sensors.

When the load cell data drops to a predefined, low weight value, the ICN can use the value as the criteria for slack rope detection. When a slack rope condition is present, the ICN will not allow further downward travel of the hoist. Only raising of the hoist hook will be allowed until the fault condition is cleared.

2.1.3.5 Wire Rope Misreeving

The main hoists have a mechanical arm/limit switch to detect improper reeling on the drum. The misreeved limit switches are normally open proximity switches held closed during normal operation. The hoist cables are wrapped on one layer across the drum. A bar is positioned close to the wrapped cable on the drum, in parallel with the drum axis. If the cable is misreeved, the cable will come into contact with the bar and actuate the limit switch, detecting the misreeving condition. Actuation of the limit switches will interrupt all power to the main hoist motors. The hoist circuits consist of logic relays that monitors level wind or mis-reeving conditions. The logic relays must be held in the "on" state in order for the circuits to be energized (thus permitting normal hoist functions). When a fault occurs, the circuit "opens" and power to the main hoist is interrupted. Recovery hoists do no include misreeving limit switches.

Recovery from the tripped condition is by use of a key in the reset key switch located under the illuminated amber light. The key switch allows the operator to bypass the alarm condition and move the crane to correct the fault. Once the tripped condition is cleared the hoist can be returned to operation.

2.1.3.6 Overspeed Protection

The buffer store crane main hoist and recovery hoist, and the export crane main hoist all have overspeed protection interlocks. An inductive proximity switch detects the gear teeth on the main hoist drums and measures the drum rotation speed. An alarm is used to indicate an overspeed condition. When an overspeed condition is detected, an input to the motor controller will disable the hoist motor. The buffer store crane recovery hoist has a duplicate, independent overspeed detection interlock design. The hoist circuits consists of a logic relay that monitors hoist overspeed conditions. The logic relays must be held

in the "on" state in order for the circuits to be energized (thus permitting normal hoist functions). When a fault occurs, the circuit "opens" and power to the main hoist and recovery hoist is interrupted.

The export crane recovery hoist does not have overspeed protection. The recovery hoist is not used for normal operation, it is used only to finish the lift in progress or set down a container in the event of main hoist failure. The crane will then go out of service to allow repair of the main hoist.

2.2 LAW Crane Control

This section presents a review of the methods available to control the LAW cranes. The intent of this section is to provide an overview of the operational procedures during normal operations and a review of the crane control equipment.

There are two methods to control the cranes. They can be controlled by the LAW ICN, or through the local control panels for each crane.

2.2.1 LAW Integrated Control Network and LAW Crane Control Room

The LAW ICN is the real-time control and data acquisition platform responsible for process operation and control, and for alarming and notification functions. While it is not the only control system in the LAW Facility, it is the only remote computer control system used to operate the cranes. With respect to the two LAW buffer store and export cranes, the ICN provides the ability to: 1) control the closed-circuit television (CCTV) cameras; 2) monitor the status of the cranes; 3) control the motion of the cranes; 4) control related equipment, such as shield doors and hatches ; and 5) interlock equipment to prevent unintentional interactions (e.g., between cranes, hatches, shield doors).

The ICN is accessed through the LAW CCR, facility control room (FCR), and the LOI. The LAW CCR is adjacent to the LAW FCR, L-A201B. There is one crane control console with an operator at the console. Both the buffer store crane (LPH-CRN-00002) and export crane (LEH-CRN-00003) are controlled from the LAW CCR or designated LOIs during normal operations.

The console is equipped with video monitors to view CCTV video. These cameras are located on the cranes. The operator can select the desired camera view to display and can control the pan, tilt, and zoom functions of each camera. These cameras provide the only view of the crane operation to the operator in the CCR.

The console can display the status information from the cranes. This includes information from the encoders, switches, load cells, condition and status flags, temperatures, and alarms. These instrument readings allow the operator to monitor the status and performance of the cranes.

The console and LOI has an operator interface that includes a joystick, switches, and displays for control of the LAW cranes. These input devices are used to control the crane bridge, trolley, and hoist movement. The console also has keyboards, switches, and displays for control of other remote equipment items in and around the crane rooms. The main equipment items relative to the LAW cranes are the room hatches and shield doors. These input devices are used to open and close these hatches and doors and to monitor their status.

2.2.2 Local Crane Control

Both the LAW export and buffer store cranes can also be controlled from their respective local control panel. The buffer store crane control panel, LPH-PNL-00019, is located in L-B006 and the export bay control panel, LEH-PNL-00005, is located on the crane maintenance platform LP0127 in L-0127. Local control is selected through the master control switch on the front of each control panel. The local control panel can control the primary and recovery drives for the bridge, trolley, and hoist. The recovery jacks for the redundant bridge and trolley drives are also controlled from the local control panel. The local control panel for the buffer store crane has four digital display meters to indicate the main hoist load and speed, and the recovery hoist load and speed. The local control panel for the export crane has two digital display meters to indicate the main hoist load and speed. Both control panels have emergency stop buttons that will disconnect power to all motors on each crane.

When in the local control mode, the local operator controls are enabled and the ICN is prevented from controlling the crane. However, the ICN will still be able to monitor the encoders, switch status, and load cell data. When in the remote mode, the crane is controlled through the ICN and local operator controls on the panel are disabled.

2.2.3 Software

Container movement and tracking for the buffer store crane is controlled by the system software and is performed on the principle of "operator intervention." The ICN is programmed to locate the crane at pre-defined positions to avoid container collisions with interfacing equipment. The control system selects a set-down position. If the operator is not satisfied with the location of the set-down position, the operator may choose an alternate position. The operator uses the CCTV cameras for visual confirmation of space availability. The operator raises and lowers the canister. When a container is placed into a position, the software will record that position and establish an exclusion zone in the control system around that position to prevent moving another container to that position.

Crane movement and indications for the export handling crane is operated by the system software under control of the operator. Interlocks are provided to prevent container or crane collisions with interfacing equipment and minimize radiological exposure to personnel.

2.3 LAW Container Grapple

(LEH-TOOL-00002 and LPH-TOOL-00007)

The LAW container grapples are mechanically actuated lifting devices used for transporting full or empty product containers. The grapples are suspended from the overhead cranes and monorails. The grapple assembly has a rated capacity of 16,500 lb, and does not exceed the container diameter when in the disengaged configuration. The grapples are designed to be remotely engaged and disengaged.

The grapples contain an indexing feature and status indicator that are clearly visible to the operator through shielded windows or CCTV cameras. The indexing feature is designed to prevent an inadvertent release of the container during handling. Three fingers of the grapple remotely engage and disengage the container neck flange. The fingers are actuated by the raising and lowering of the crane hoist. To prevent a potential drop of a container, the indexing feature of the grapple requires two fully lowered set-downs to disengage the container.

The grapple is equipped with an emergency means to disengage the grapple from the load if the normal disengagement mechanism fails. For System LPH, the emergency release mechanism is actuated by the MSM. The container rework area (L-B025D) east wall is equipped with MSM penetrations/plugs and a shielded glass window to facilitate emergency release operations. Any MSMs will be installed as needed.

Figure 3 LAW Container Grapple

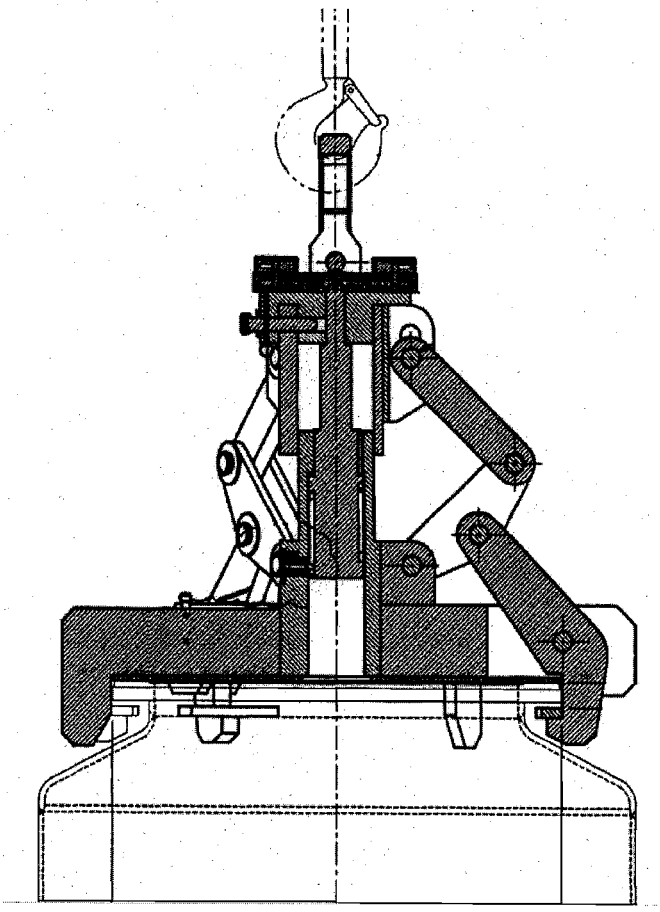

3 HLW Cranes

The HLW Facility produces finished canisters through a process by which they are filled with molten glass, sealed with a welded lid, decontaminated, and readied for shipment. As the canisters pass through the facility, they can be handled by five dedicated cranes: the HLW canister handling upper crane (HPH-CRN-00002) or the HLW canister handling lower crane (HPH-CRN-00001), both part of the HLW canister pour handling system (HPH); the HLW decontamination cave crane (HDH-CRN-00005), part of the HLW canister decontamination handling system (HDH); the HLW storage cave crane (HEH-CRN-00003) and the HLW cask handling crane (HEH-CRN-00001), both part of the HLW canister export handling system (HEH).

There are also two melter cave main cranes (HSH-CRN-00001 and HSH-CRN-00014) that are part of the HLW melter cave support handling system (HSH). It is possible, though not expected, that a crane in each of the two melter caves could handle the canisters as part of a recovery operation.

All seven of the HLW cranes are similar in design and function. They are built by the same vendor under the same specification.

3.1 Design and Operations - HLW High Integrity Cranes

3.1.1 HLW Canister Handling Cave Cranes HPH-CRN-00001 and HPH-CRN-00002

The HLW canister handling cave cranes HPH-CRN-00001 and HPH-CRN-00002 are located in H-0136, the canister handling cave (Figure 4). The documents referenced below provide additional design details and operational information for these cranes.

- 24590-HLW-3YD-HPH-00001, *System Description for the HLW System HPH Canister Pour Handling.*
- 24590-HLW-M0D-HPH-00063, *Mechanical Handling Data Sheet, 24590-HLW-MJ-HPH-CRN-00002 - Canister Handling Crane (Upper).*
- 24590-HLW-M0D-HPH-00064, *Mechanical Handling Data Sheet, 24590-HLW-MJ-HPH-CRN-00001 - Canister Handling Crane (Lower).*
- 24590-HLW-M7-HPH-00001001, *HLW Vitrification System HPH Mechanical Handling Diagram Canister Pour Handling Canister Handling Cave.*
- 24590-HLW-M7-HPH-00001002, *HLW Vitrification System HPH Mechanical Handling Diagram Canister Pour Handling Canister Handling Cave.*

3.1.1.1 Purpose

The primary purpose of the HLW canister handling cranes is to transport HLW canisters within the canister handling cave. They will also be used to transport equipment, consumables, and remove secondary solid waste. The cranes will normally have a three-jaw mechanical sequence grapple attached to the lifting hook. The grapple is remotely detachable so a variety of lifting fixtures can be used for maintenance. The crane layout is shown in Figure 4.

Figure 4 HLW Canister Handling Cave Cranes (HPH-CRN-00001 and HPH-CRN-00002)

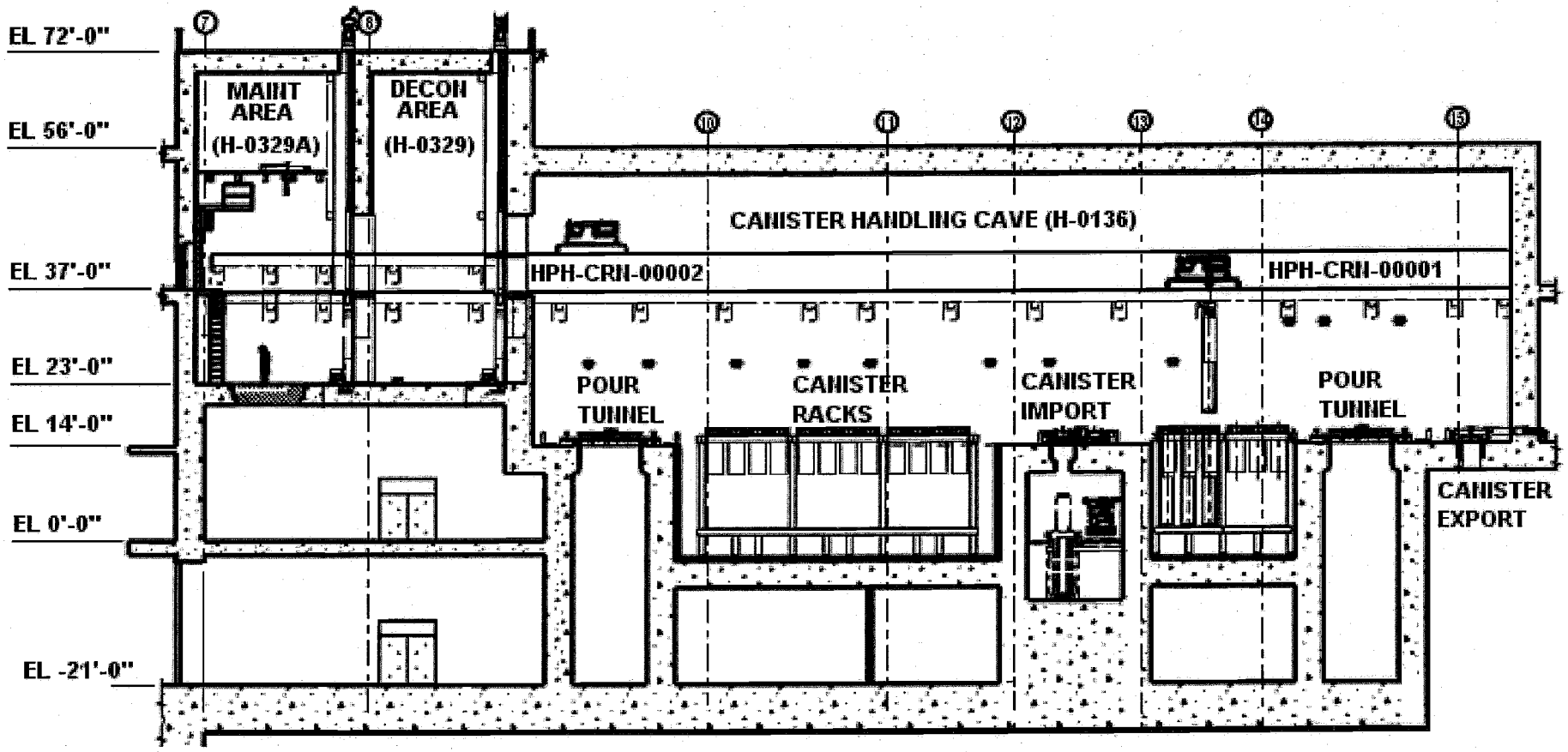

3.1.1.2 Description

The HLW canister handling cranes are remotely operated 6-ton rated load bridge cranes. They are classified as overhead, top running, double girder cranes (CMAA, Class E-Severe Service) and are designed for a service life of 40 years. The main cables and reels are designed for a minimum 15-year life. The cranes are installed in the canister handling cave on two sets of rails, with one crane per rail set. There is clearance for the upper crane to pass over the lower crane when the hook is retracted.

The rail runway length is 188 ft 7 in. The bridge span of the lower crane is 15 ft 9.5 in., and the span of the upper crane is 19 ft 4 in. The long travel of the crane is in the east/west direction, and the cross travel is in the north/south direction. The hook approach to the canister handling cave in-cave north and south wall is 2 ft 8 in. The hook approach to the in-cave east wall is 5 ft 7 in. and to the CMA west wall is 6 ft 10.5 in. The cranes each have a single hoist with a powered rotating hook. The trolleys and hoists have a maximum speed of 25 ft/min, and the bridges have a maximum speed of 50 ft/min. The crane hoists are double-reeved, which provides a true vertical lift. The cranes include a number of controls and design features to prevent potential damage to themselves or other equipment (Section 3.1.1.4 and 3.1.5). There are no tanks or miscellaneous units within the operating path of the canister handling cranes.

Both cranes have the same camera and lighting capabilities. There are four bridge-mounted cameras and two truck-mounted cameras, all capable of pan, zoom, iris and tilt. There is also one hook-deployed camera with lighting, pan, zoom, iris and tilt. Four lights are mounted off the bridge beams.

The rail runways occupy the full length of the canister handling cave (H-0136), the crane decontamination area (CDA) (H-0329), and the CMA (H-0329A).

The HLW canister handling cranes have load weighing systems that provide digital readout indication at the CCR HMI and LOIs. The weighing system is separate from and independent of the overload protection system.

3.1.1.3 Crane Operations

The cranes can be remotely operated at a suitable LOI or from the CCR. Control and power to the cranes are provided via a multi-core umbilical cable deployed from the CMA H-0329A. The cable is tethered to the south end carriage of the bridge, and guided on rollers along the length of the canister handling cave and decontamination cave, into the CMA and terminated on a cable reel. The cable reel is driven through wall, locating the cable reel drive system outside of the cave. The crane is moved to a park position in the CMA, where inspections can be performed in low radiation/contamination area.

Under normal operations, empty canisters are transported on a bogie through a transfer tunnel to a position under the canister handling cave. The crane grapple reaches through a floor hatch to engage with the canister and raise it into the canister handling cave. The empty canister is then lowered into position in a storage rack. When a canister is ready to be filled, it is picked up and then lowered onto a bogie in one of two pour tunnels. The pour tunnels are separated by floor hatches from the canister handling cave. In the pour tunnel the bogie with an empty canister is positioned under one of the HLW melters, where the canister is filled with glass. Once the canister has cooled, its path is reversed and it returns to a storage rack in the canister handling cave. When the canister is cool enough it is moved from the storage rack to the welding station, where a permanent lid is securely welded. Once welding is complete the canister is either returned to the storage rack, or is lowered into the rinse bogie located in the canister rinse tunnel (H-B039B) that leads to the canister decontamination cave.

3.1.1.4 Crane Interface Interlocks

The HPH system utilizes control system permissives and interlocks to ensure normal plant operations are kept within the design envelope and to provide protection to major equipment. To prevent equipment damage an ICN interlock inhibits crane movement across the decontamination and maintenance shield door thresholds unless the crane trolley is aligned with the horizontal shield door opening, and the crane hook is raised. Bridge travel is restricted when approaching a shield door or at the end of the crane rails. As the crane approaches the shield door, it will actuate a switch, causing the crane to automatically slow down. The crane can only proceed through the shield door aperture when the trolley is aligned with the horizontal shield door opening. When clear of the door opening, the crane is permitted to again travel at full speed when entering the canister handling cave.

The bridge has proximity type limit switches to detect the ultimate travel limits along the crane rails. The first limit switch, when tripped, will reduce the bridge travel speed. The second limit switch, when tripped, will provide an input to the motor controller to disable motion toward the end of the rail. For example, if the switch detects the extreme east travel limit on the bridge, the motor controller will prohibit further travel east and only allow travel west until the switch resets. Bumpers attached to the bridge are provided to physically limit the travel of the bridge. The trolley ultimate travel limits are restricted with a similar design.

A collision avoidance system is included on the canister handling cranes to prevent them from running into one another. Each crane has a "feeler" switch to detect the proximity of the other crane. When the system senses that one crane is over or under the other, the system shall stop both cranes until the operator acknowledges at the LOI or human-machine interface (HMI). After the operator acknowledges, both cranes shall operate at slow speed until the systems detect that the cranes are clear of one another. The operator will be notified either by a lighted switch on the LOI or HMI console or a warning will be displayed on the operator screen of the HMI.

Also see Section 3.1.5 for additional common crane interlocks.

3.1.1.5 Crane Recovery

In the event of a mechanical failure, the canister handling cave cranes are designed to allow remote recovery. Since personnel access is prohibited in the canister handling cave, the cranes must have the ability to recover from a failure and return to the CDA without a canister. In order to accomplish this, the cranes incorporate the following features:

- Independent redundant recovery hoist drive train
- Independent redundant recovery trolley drive train positioned via jacks when needed
- Independent redundant recovery bridge drive train positioned via jacks when needed

The recovery drive components may be actuated and controlled through the crane control panel or at the LOI while maintaining full viewing capacity via the camera systems.. If the main hoist is inoperable, the recovery drive can be used to raise and lower the load. If the main trolley drive system is inoperable, the recovery wheels can be lowered on jacks to lift the trolley, engage the recovery drive wheels, and disengage the main drive wheels. A similar recovery system is used on the bridge drive wheels.

In the event of a complete loss of power, bridge or drive train failures, the cranes may be recovered to the CDA/CMA using a hand winch on the cable reeling system to pull the crane back into the CDA/CMA.

HLW high integrity cranes are provided with redundant and independent braking systems. Interrupting power to the hoist motor will cause the motor to stop and both the primary and emergency brakes to immediately set preventing loads from falling.

3.1.1.6 Crane Decontamination and Maintenance

The canister handling cave is a contaminated area where personnel access is prohibited at all times. Personnel access to the cranes is only allowed in the crane decontamination and maintenance areas. The CDA (H-0329) is located to the west of the canister handling cave (H-0136), and the CMA (H-0329A) is located west of the decontamination area. The three areas are separated by two sets of shield doors. This shielding allows personnel access into the decontamination and the maintenance areas.

3.1.2 HLW Decontamination Cave Crane HDH-CRN-00005

The HLW decontamination cave crane HDH-CRN-00005 is located in H-0133, the canister swabbing and monitoring cave (Figure 5). The documents referenced below provide additional design details and operational information for this crane.

- 24590-HLW-3YD-HDH-00002, *System Description for the HLW System HDH Canister Decontamination Handling.*
- 24590-HLW-M0D-HDH-00021, *Mechanical Handling Data Sheet, 24590-HLW-MJ-HDH-CRN-00005 - Decontamination Swabbing and Monitoring Crane.*
- 24590-HLW-M7-HDH-00001005, *HLW Vitrification System HDH Mechanical Handling Diagram Canister Decontamination Handling System.*

3.1.2.1 Purpose

The purpose of the decontamination cave crane is to transport full canisters through the decontamination and swabbing process. Canisters are held by the canister grapple, which is suspended from the six-ton hoist (with rotating hook). The mechanically actuated grapple remotely engages and disengages with the canister neck flange. The crane may be used for the transfer of in-cave equipment that requires maintenance (e.g., transfer hatches that incorporate remote handling lifting bails) to the CMA (Figure 5).

Figure 5 HLW Decontamination Cave Crane (HDH-CRN-00005)

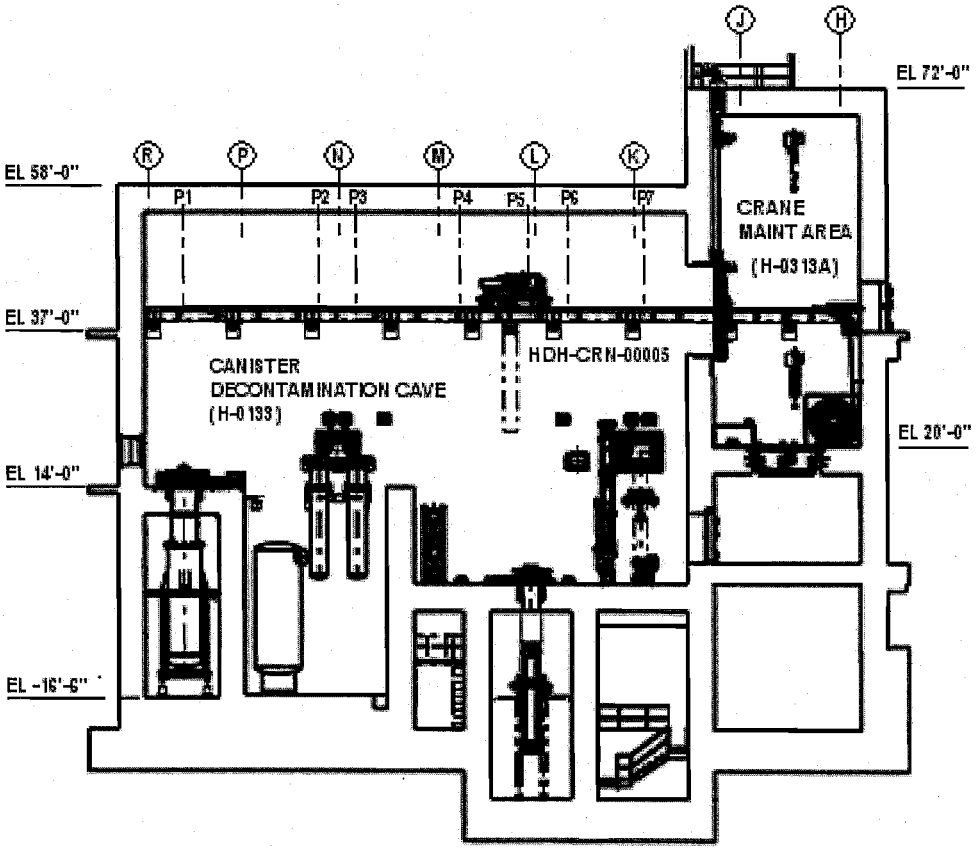

3.1.2.2 Description

The HLW canister decontamination cave crane is a remotely operated 6-ton rated load bridge crane. It is classified as an overhead, top running double girder crane (CMAA, Class E-Severe Service) and is designed for a service life of 40 years.

The rail runway length is 107 ft, and the bridge span is 9 ft 8 in. The long travel of the crane is in the north/south direction, and the cross travel is in the east/west direction. The hook approach to the CMA north wall is 7 ft 2 in. and to the in-cave south wall is 5 ft 9 in. The hook approach to the east and west wall is 4 ft. The powered hook has a single-speed drive of nominal rotational speed of 1-2 rpm. The main hoist has a variable 0-25 ft/min drive, and a single-speed recovery drive of 5 ft/min. The main bridge has a variable 0-50 ft/min drive, and a single-speed recovery drive of 5 ft/min. The main trolley has a variable 0-25 ft/min drive, and a single-speed recovery drive of 5 ft/min. The crane includes a number of controls and design features to prevent potential damage to themselves or other equipment (Sections 3.1.2.4 and 3.1.5). Although tanks (HLW decontamination vessels) are within operating range of the crane, they are protected in an enclosed pit with concrete walls and platforms.

The crane is equipped with four crane mounted cameras capable of pan, tilt, zoom, and iris, one hook deployed camera including lighting, pan, tilt, zoom and iris and two crane mounted lights, to aid viewing of all operations and maintenance activities performed in the decontamination cave.

The crane is located on wall-mounted rails, supported on structural steel work in the HLW canister decontamination/swabbing and monitoring cave. The rails extend from the canister decontamination/swabbing and monitoring cave (H-0133) through the shield door into the CMA (H-0313A). The walls remain the same thickness during the transition between the canister decontamination cave and CMA, and the crane rail supporting steelwork design remains the same.

The crane is parked in a position in the CMA allowing inspections to be performed in a low radiation/contamination area.

3.1.2.3 Crane Operation

The cranes can be manually operated at a suitable LOI or from the CCR. Control and power to the crane are provided via a multi-core umbilical cable deployed into the decontamination cave from the CMA. The cable is tethered to the west end carriage of the bridge, and guided on rollers along the length of the decontamination cave, into the CMA, and terminated on a cable reel. The cable reel is driven through the wall, locating the cable reel drive system outside of the cave.

During normal operations, the crane collects the canister from the rinse bogie and transports the canister through the decontamination process. It is also required to place the canister onto a turntable at the swab/monitoring station.

3.1.2.4 Crane Interface Interlocks

The HDH system utilizes control system permissives and interlocks to ensure normal plant operations are kept within the design envelope and to provide protection to major equipment. To prevent equipment damage an ICN interlock inhibits crane movement across the CMA shield door threshold unless the shield door is open, and the crane hook is raised.

Also see Section 3.1.5 for additional common crane interlocks.

3.1.2.5 Crane Recovery

The crane is provided with a recovery drive on the six-ton hoist in the event of failure of the primary drive. The trolley and bridge are supplied with jack down wheels that are deployed in the event of drive failure or wheel seizure. The jack down wheels lift the failed wheel clear of the rail, and provide drive to return the crane to the CMA.

In the event of a complete loss of power, bridge or drive train failures, the crane may be recovered to the CMA using a hand winch on the cable reeling system to pull the crane back into the CMA. The cable reeling system can also be used to pull the crane back to the CMA in the event of bridge drive system failure.

HLW high integrity cranes are provided with redundant and independent braking systems. Interrupting power to the hoist motor will cause the motor to stop and both the primary and emergency brakes to immediately set preventing loads from falling.

3.1.2.6 Crane Decontamination and Maintenance

The crane maintenance and decontamination activities, typically a wipe down, are conducted in a dedicated CMA (H-0313A) on elevation 20 ft at the north end of the decontamination cave. The CMA is equipped with two jib cranes, one on the east wall of the CMA at a high level (approximately 65 ft), and one on the west wall at a lower elevation (approximately 33 ft). The jib cranes are locally controlled, and are used to support maintenance activities on the decontamination cave crane, and on any items from the decontamination cave that require maintenance in the CMA. Platforms are provided to enable inspection of and access to all decontamination crane components.

The crane is of modular construction, utilizing quick connectors that facilitate removal and replacement of failed components, and is designed to withstand decontamination without degrading the functionality of the electrical or mechanical components. Permanently lubricated, sealed-for-life components are used wherever possible; where not provided, lubrication systems are designed to be accessible to aid maintenance.

3.1.3 HLW Canister Storage Cave Crane HEH-CRN-00003

The HLW canister storage cave crane HEH-CRN-00003 is located in H-0132, the canister storage cave (Figure 6). The documents referenced below provide additional design details and operational information for this crane.

24590-HLW-3YD-HEH-00001, *System Description for the HLW System HEH Canister Export Handling.*

24590-HLW-M7-HEH-00001004, *HLW Vitrification System HEH Mechanical Handling Diagram Canister Export Handling System.*

24590-HLW-M0D-HEH-00025, *Mechanical Handling Data Sheet, 24590-HLW-MJ-HEH-CRN-00003 - Canister Storage Crane.*

3.1.3.1 Purpose

The crane's primary purpose is to handle filled immobilized HLW (IHLW) canisters. It will import these canisters into the canister storage cave, place them into the canister storage rack, and export them from the canister storage cave into an awaiting shielding cask in the cask handling tunnel (H-B033B) when required (Figure 6). The crane will also be used to support maintenance activities such as transferring the import or export hatch cover to the CMA, or removal and replacement of the canister storage rack upper sections if required.

Figure 6 HLW Canister Storage Cave Crane (HEH-CRN-00003)

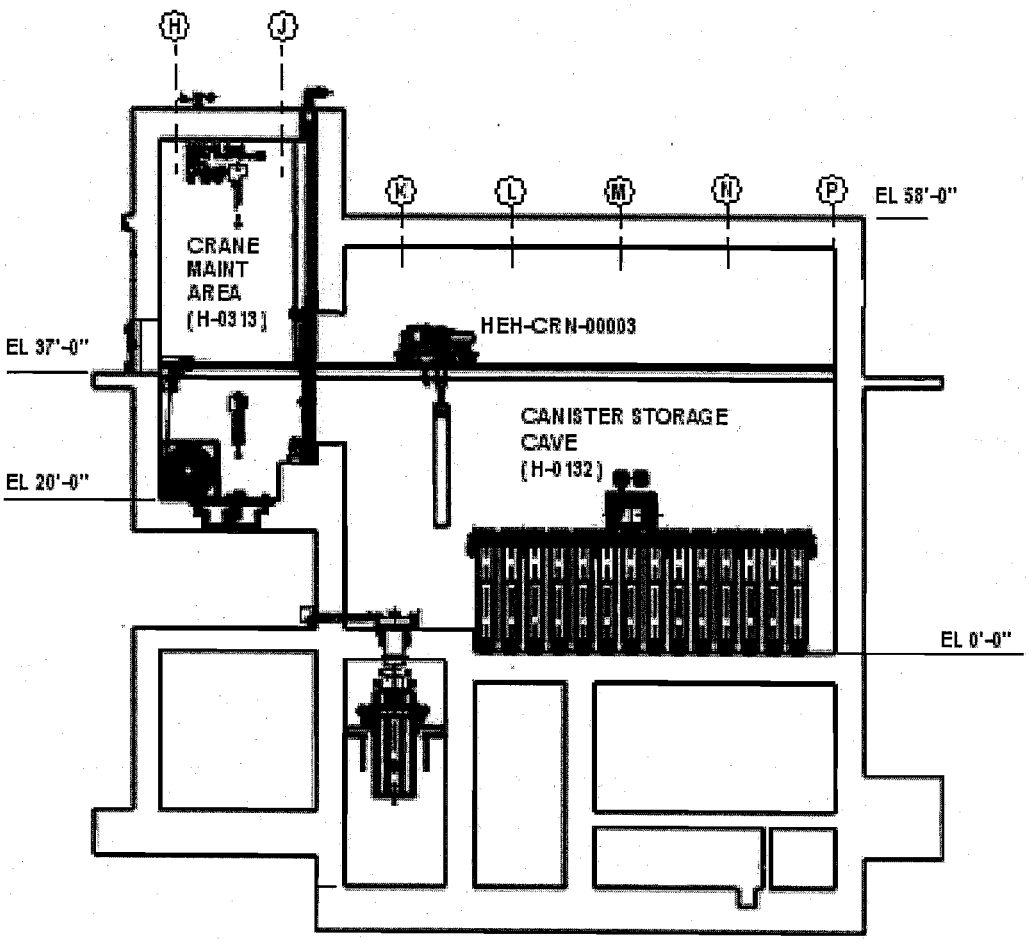

3.1.3.2 Description

The HLW canister storage cave crane is a remotely operated 6-ton rated load bridge crane. It is classified as an as overhead, top running, double girder (CMAA, Class E-Severe Service) process crane and is designed for a service life of 40 years.

The rail runway length is 91 ft 9 in., and the bridge span is 20 ft 8 in. The long travel of the crane is in the north/south direction, and the cross travel is in the east/west direction. The hook approach to the CMA north wall is 7 ft 2 in. and to the in-cave south wall is 5 ft 3.5 in. The hook approach to the east and west wall is 4 ft. The powered hook has a single speed drive of nominal rotational speed of 1-2 rpm. The main hoist has a variable 0-25 ft/min drive, and a single speed recovery drive of 5 ft/min. The main bridge has a variable 0-50 ft/min drive, and a single speed recovery drive of 5 ft/min. The main trolley has a variable 0-25 ft/min drive, and a single speed recovery drive of 5 ft/min. The crane includes a number of controls and design features to prevent potential damage to themselves or other equipment (Sections 3.1.3.4 and 3.1.5). There are no tanks or miscellaneous units within the operating path of the canister storage cave crane.

Lighting and CCTV are installed on the crane to aid viewing of in-cave handling activities; direct observations of the crane movements can be made from a shield window located at the storage cave east wall. The crane has four bridge-mounted cameras and two trolley-mounted cameras capable of pan, tilt, zoom, and iris. There is also one hook-deployed camera including lighting, pan, tilt, zoom, and iris. The crane is supplied with four metal halide high-intensity discharge crane floodlights, providing a minimum of 20 foot-candles of illumination at the crane operating elevation. The lights are individually controlled.

The crane is located on wall-mounted rails supported on structural steel work in the canister storage cave (H-0132). The rails extend from the canister storage cave through shield doors into the CMA (H-0313B). The walls remain the same thickness during the transition between the cave and CMA and the supporting steelwork remains the same design.

3.1.3.3 Crane Operation

The crane is controlled via the ICN from an LOI.

There are no on-board logic control systems mounted on the crane; control and power to the crane are provided via a multi-core umbilical cable deployed into the storage cave from the CMA. The cable is tethered to the east end carriage of the bridge, and guided on rollers along the length of the storage cave, into the CMA, and terminated on a cable reel. The cable reel is driven through wall, locating the cable reel drive system outside of the cave.

3.1.3.4 Crane Interface Interlocks

The HEH system utilizes control system permissives and interlocks to ensure normal plant operations are kept within the design envelope and to provide protection to major equipment. To prevent equipment damage an ICN interlock inhibits crane movement across the CMA shield door threshold unless the shield door is open, and the crane hook is raised.

Also see Section 3.1.5 for additional common crane interlocks.

3.1.3.5 Crane Recovery

The crane is provided with a recovery drive on the six-ton hoist in the event of the primary drive failure. The trolley and bridge are supplied with jack-down wheels that are deployed in the event of drive failure or wheel seizure. The jack-down wheels lift the failed wheel clear of the rail, and provide drive to return the crane to the CMA.

In the event of a complete loss of power, bridge or drive train failures, the crane may be recovered to the CMA using a hand winch on the cable reeling system to pull the crane back into the CMA. The cable reeling system can also be used to pull the crane back to the CMA in the event of bridge drive system failure.

HLW high integrity cranes are provided with redundant and independent braking systems. Interrupting power to the hoist motor will cause the motor to stop and both the primary and emergency brakes to immediately set, preventing loads from falling

3.1.3.6 Crane Decontamination and Maintenance

The crane maintenance and decontamination activities, typically a wipe down, are conducted in a dedicated CMA (H-0313B) located on elevation +20 ft at the north end of the storage cave. Routine inspections and maintenance of the storage cave crane will be performed in the CMA. Platforms are provided to enable inspection of and access to all storage crane components. Wall-mounted lights and cameras are provided in the CMA to provide illumination and remote viewing of maintenance activities. The CMA is separated from the storage cave by vertical and horizontal shield doors that provide both shielding and contamination control. Decontamination activities can be performed on the storage cave crane from the platforms or floor. When not in use, the cranes will be parked in the maintenance area to avoid unnecessary exposure to contamination in the cave.

To facilitate maintenance activities, the major crane components (e.g., wheel assemblies) are modular in design, and quick release connectors have been used for cabling connections. The crane is designed to withstand decontamination without degrading functionality of the electrical or mechanical components. Permanently lubricated, sealed-for-life components are used wherever possible; where not provided, lubrication systems are designed to be accessible to aid maintenance. The bridge and trolley wheel modules are sealed for life and do not require regular lubrication. The gearboxes are also sealed for life.

3.1.4 HLW Melter Cave Main Cranes HSH-CRN-00001 and HSH-CRN-00014

The HLW melter cave main cranes HSH-CRN-00001 and HSH-CRN-00014 are located in melter cave 1 (H-0117) and melter cave 2 (H-0106) (Figure 7 depicts the melter cave 1 and 2 main cranes; both melter cave cranes have the same design and layout). The documents referenced below provide additional design details and operational information for these cranes.

- 24590-HLW-3YD-HSH-00001, *System Description for the System HSH - HLW Melter Cave Support Handling.*
- 24590-HLW-M0D-HSH-00013, *Mechanical Handling Data Sheet, 24590-HLW-MJ-HSH-CRN-00001 - Melter 1 Cave Crane.*
- 24590-HLW-M0D-HSH-00181, *Mechanical Handling Data Sheet, 24590-HLW-MJ-HSH-CRN-00014 - Melter 2 Cave Main Crane.*
- 24590-HLW-M7-HSH-00001002, *HLW Vitrification System HSH Mechanical Handling Diagram Melter Cave Support Handling Melter Cave 1.*
- 24590-HLW-M7-HSH-00002002, *HLW Vitrification System HSH Mechanical Handling Diagram Melter Cave Support Handling Melter Cave 2.*

3.1.4.1 Purpose

The primary purpose of the HLW melter cave main cranes is to provide maintenance and decommissioning lift capabilities to support removal and change-out of the heavier components, vessels, and assemblies within the melter cave (Figure 7). These cranes are not process cranes. They are used intermittently, but are available on demand. In an off-normal event, the crane may be used to remove an HLW canister from the pour tunnel bogie.

Figure 7 HLW Melter Cave Cranes (HSH-CRN-00001 and HSH-CRN-00014)

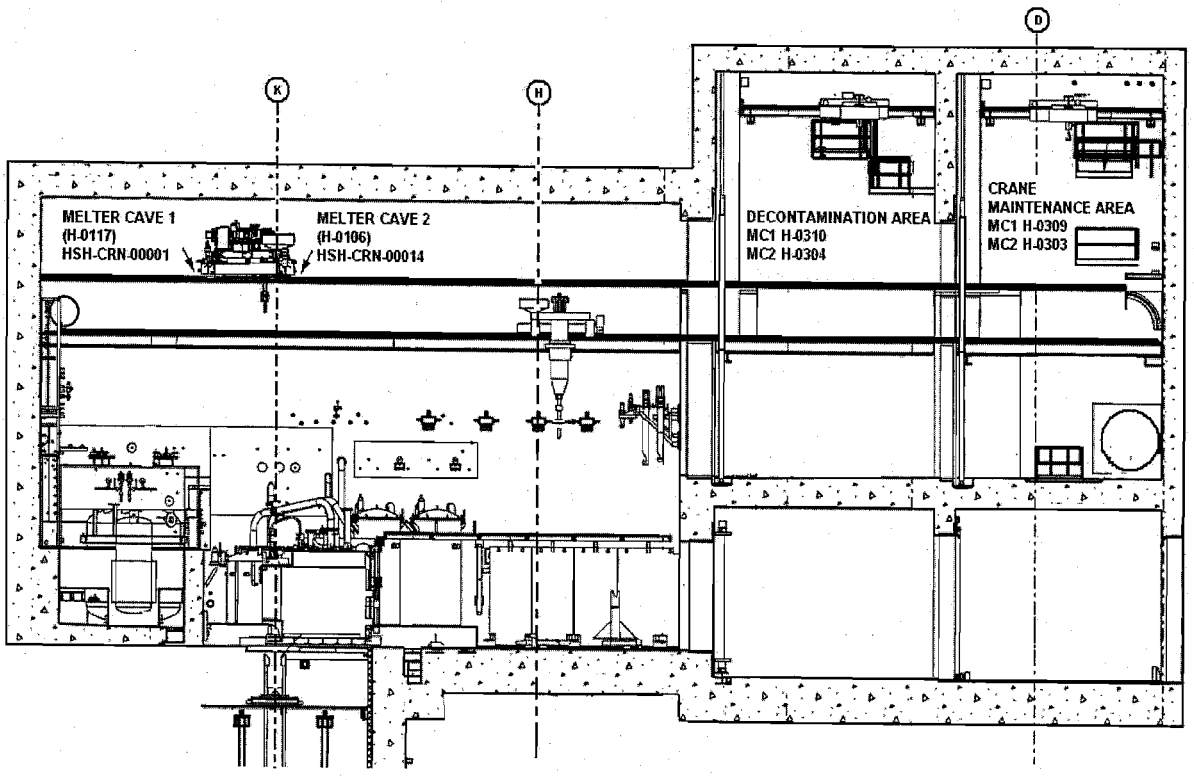

3.1.4.2 Description

The HLW melter cave cranes are remotely operated 25-ton rated load bridge cranes. They are classified as overhead, top running, double girder cranes (CMAA, Class E-Severe Service) running on wall-mounted rails, with a designed service life of 40 years.

The rail runway length is 131 ft 10 in., and the bridge span is 34 ft 4 in. The long travel of the crane is in the north/south direction, and the cross travel is in the east/west direction. The hook approach to the CMA north wall is 10 ft 6 in. and to the in-cave south wall is 6 ft 9 in. The hook approach to the east and west wall is 3 ft 1 in. The powered hook has a single-speed drive of nominal rotational speed of 1-2 rpm. The main hoist has a variable 0-25 ft/min drive, and a single-speed recovery drive of 4 ft/min. The main bridge has a variable 0-50 ft/min drive, and a single-speed recovery drive of 5 ft/min. The main trolley has a variable 0-25 ft/min drive, and a single-speed recovery drive of 5 ft/min. Although miscellaneous units (HLW melters and HSH decontamination tanks) are within operating range of the cranes, the cranes include a number of controls and design features to prevent potential damage to themselves or other equipment (Sections 3.1.4.4 and 3.1.5). The HSH decontamination tanks are protected in an enclosed decontamination pit that includes a shield lid.

There are four lights and seven cameras mounted on the bridge, with one camera on the trolley and one hook-deployable camera. The hook block contains a receptacle for remote tools and camera. A load weighing system is provided on the main hoist. The load weighing system provides a digital readout indication at the CCR HMI and LOIs. The weighing system is separate from and independent of the overload protection system.

The rails extend from the melter cave (H-0106/H-0117) into the decontamination area (H-0304/H-0310) to the CMA (H-0303/H-0309) through two sets of shield doors. The cranes are equipped with recovery drives and a power rotate remote plate hook.

3.1.4.3 Crane Operation

Melter cave operations using the main crane may be conducted from the CCR or from an LOI in either the east or west corridor, as appropriate. An LOI is stationed outside of the breakdown area in the west corridor on elevation +3 ft operating platform, and outside of the sorting table area in the east corridor on elevation +14 ft. After the majority of tasks are complete, the cranes are returned to a designated parked position, behind the decontamination door in the decontamination area, to minimize the accumulated dose and exposure to contamination.

3.1.4.4 Crane Interface Interlocks

The HSH system utilizes control system permissives and interlocks to ensure normal plant operations are kept within the design envelope and to provide protection to major equipment. To prevent crane collisions with the walls at either end of the caves, bridge end-of-travel is limited by an end of travel switch mounted on the end truck-housed wheel module. It is activated by a plunger, which strikes the end stop. As the bridge approaches the end of travel, the control system reduces the speed to creep speed. A limit switch, which engages directly with the end stop, reduces the speed from creep speed to full stop. Bridge and trolley shock absorbing bumpers are also provided to ensure that a fully loaded crane traveling at maximum speed into the end stops does not cause any damage or promote hazardous situations.

In addition to the melter cave cranes, both melter caves also contain a crane mounted power manipulator with slewing hoist mounted on crane rails that are located beneath the melter cave crane rails. Therefore, a collision avoidance system is provided for the melter cave cranes. When the collision avoidance system senses that one crane is over or under the other, the system stops both cranes until the operator acknowledges at the LOI or HMI. Once the hazard is acknowledged, the crane will be allowed to proceed at slow speed only, until it passes the neighboring crane with the power manipulator. The operator is notified by a lighted switch on the LOI or HMI console.

Also see Section 3.1.5 for additional common crane interlocks.

3.1.4.5 Crane Recovery

The melter cave cranes are equipped with recovery drives and hydraulically activated jack down wheels that allow recovery of the main hoist, bridge travel, and trolley travel drive system. The crane is provided with a recovery drive on the 25-ton hoist in the event of the primary drive failure. The trolley and bridge are supplied with jack down wheels that are deployed in the event of drive failure or wheel seizure. The jack down wheels lift the failed wheel clear of the rail, and provide drive to return the crane to the CMA.

In the event of a complete loss of power, bridge or drive train failures, the cranes may be recovered to their respective CDA/CMA using a hand winch on the cable reeling system to pull the crane back into the CDA/CMA. The cable reeling system can also be used to pull the crane back to the CMA.

The HLW high integrity cranes are provided with redundant and independent braking systems. Interrupting power to the hoist motor will cause the motor to stop and both the primary and emergency brakes to immediately set preventing loads from falling.

3.1.4.6 Crane Decontamination and Maintenance

Dedicated crane maintenance areas (H-0303/H-0309) and decontamination (H-0304/H-0310) areas are located on elevation +23 ft north of the melter cave. Routine inspections and maintenance of the melter cave cranes will be performed in the CMA. Manual or remote decontamination of cranes is carried out from the elevation +58 ft platforms in the CDA.

To facilitate maintenance, the crane is of modular construction, utilizing quick connectors that facilitates removal and replacement of failed components, and is designed to withstand decontamination without degrading functionality of the electrical or mechanical components. Permanently lubricated, sealed for life components are used where ever possible, where not provided, lubrication systems are designed to be accessible to aid maintenance.

3.1.5 Key Design Features

This section describes common key design features of the HLW high integrity cranes and gives a general description of operating procedures associated with the safe operation of the HLW cranes, as identified in DWP Condition III.10.C.15.a.i.(B), which are included in the specification for high integrity cranes.

3.1.5.1 Allowed Bridge and Trolley Travel Path

Bridge and trolley travel limit switches are provided to limit travel on either the north-south or east-west axes. These are normally open proximity switches that are held closed. They are used to stop bridge or trolley operation at either end of travel. Actuation of these limit switches will disable the bridge or trolley operation in one direction while operation in the opposite direction remains unaffected.

3.1.5.2 Upper and Lower Hook Travel Limits

The upper and lower hook travel is controlled by a four-position geared cam limit switch. The limit switch has an input shaft that drives a gear, which rotates the cam block. The cam block houses independently adjustable cams that actuate the precision-type snap action switches. The switch provides four single-pole, double-throw switches. The limit switch has the following four positions:

- **Normal Upper:** The hoist normal upper limit switch detects hoist drum rotations to provide the primary hoist-raising control limit. The switch is adjusted to actuate at the maximum required operational hook elevation. Actuation of this limit switch will disable primary hoist raising operation while lowering operations remain unaffected.
- **High Upper:** The hoist high upper limit switch detects hoist drum rotations to provide a secondary hoist-raising control limit. The switch is adjusted to actuate at a point above the trip set point of the normal hoist raising control travel limit switch. Actuation of this limit will disable hoist operation in both directions and cause the holding and emergency brakes to set. Recovery from the tripped condition is by use of a key in the reset key switch. The key switch allows the operator to bypass the alarm condition and lower the hoist to correct the fault. The cause of the high upper limit trip will be investigated and repaired before normal operation is resumed. Once the tripped condition is cleared the hoist can be returned to operation.

- **Lower:** The lower limit switch detects hoist drum rotations to provide the primary hoist-lowering control limit. The switch is adjusted to actuate at the minimum required operational hook elevation. Actuation of this limit switch will disable primary hoist lowering operation while raising operations remain unaffected. The lower limit switch is adjusted to ensure that a minimum of three wraps remain on the drum at the lowest hook elevation.
- **Slow-down:** The slow-down limit switch detects hoist drum rotations to provide control in the hoist-raising slow-down zone. The switch is adjusted to actuate as the hoist approaches the maximum required operational hook elevation. Actuation of this limit switch will restrict hoist speed control to minimum speed in raising operations, while hoist speed control in lowering operations remains unaffected.

3.1.5.3 Two-Blocking Prevention

Two-blocking occurs whenever the load block comes into physical contact with the trolley frame. Two-blocking can cause the wire rope, rigging, reeving, and other components to become highly stressed and over loaded, in which case the wire rope may fail allowing the load, block, etc., to fall.

The hoist high-high upper limit switch directly interrupts power to the primary hoist motor to prevent hoist two-blocking. The switch is adjusted to actuate at a point above the trip settings of both the normal and high upper-limit switches. Actuation of this limit switch will disable primary hoist operation in both directions and cause the holding and emergency brakes to set.

Recovery from the tripped condition is by use of a two position key switch. Indexing the switch to the bypass position will bypass the limit switch to allow hoist motion only in the lowering direction. Once the tripped condition is cleared the hoist can be returned to operation.

3.1.5.4 Hook Load Limits

Overload protection is provided with load cells. Attempting to lift a load that is 90 % of the rated load will provide a status indication. Attempting to lift a load that exceeds 110 % of the rated capacity will cause the overload protection switch to disable hoist raising and lowering operations and set the hoist holding and emergency brakes. A light will indicate that the hoist high overload limit is tripped. Weighing systems (if provided) are separate from and independent of the overload protection system.

Recovery from the tripped condition is by use of a two position key switch. Indexing the switch to the bypass position will bypass the limit switch to allow hoist motion only in the lowering direction. Once the tripped condition is cleared the hoist can be returned to operation.

Failing to center the lower block over the load prior to lifting could cause an unbalanced load fault. An unbalanced load limit switch is a normally open proximity switch held closed during normal operation. It detects excessive wire rope equalizer travel, which could result from load side pulling. Actuation of this limit will cause all hoist motion to be disabled.

Where multiple ropes are used with an equalizer bar, a shock absorbing system is provided within the upper block arrangement to transfer the load in the event of a single rope failure.

Recovery from the unbalanced load condition is by use of a two position key switch. Indexing the switch to the bypass position will bypass the proximity switch to allow hoist motion only in the lowering direction. Once the tripped condition is cleared the hoist can be returned to operation.

3.1.5.5 Wire Rope Misreeving

Sheaves are provided with close-fitting guards for guiding the rope into the drum grooves. The hoist has a mechanical arm/limit switch to detect misreeving of the wire rope on the hoist drum. The misreeved limit switches are normally open proximity switches held closed during normal operation. The hoist cable is wrapped on one layer across the drum. A bar is positioned close to the wrapped cable on the drum in parallel with the drum axis. If the cable is misreeved, the bar will come into contact with the cable and actuate the limit switch, detecting the misreeving condition. Actuation of switches will disable hoist operation in both directions and cause the holding and emergency brakes to set.

Recovery from the tripped condition is by use of a key in the reset key switch. This two-position key switch is used to bypass the hoist drum misreeving proximity switches. Indexing the switch to the bypass position will bypass the proximity switches to allow hoist motion only in the lowering direction. Once the tripped condition is cleared the hoist can be returned to operation.

3.1.5.6 Overspeed Protection

The main hoist drum overspeed detection system identifies an overspeed condition in the event of a hoist drive train failure. A centrifugal governor switch is attached to the hoist drum drive train. When an overspeed condition is detected, the switch is configured to disable the main hoist motor and set the brakes. The set point has a minimum adjustable range from 75 % to 115 % of the hoist's rated speed, and trips at 115 % without intentional delay.

Recovery from the tripped condition is by use of a key in the reset key switch. This two-position key switch is used to reset hoist operation. Momentarily indexing the switch to the reset position will clear the fault. The cause of the overspeed fault is investigated and corrected before the hoist is placed back into service.

3.2 Design and Operations - HLW Cask Handling Crane

3.2.1 HLW Truck Bay Cask Handling Crane HEH-CRN-00001

The HLW truck bay cask handling crane HEH-CRN-00001 is located in H-0127, the cask export truck bay (Figure 8). The documents referenced below provide additional design details and operational information for this crane.

- 24590-HLW-3YD-HEH-00001, *System Description for the HLW System HEH Canister Export Handling.*
- 24590-HLW-M0D-HEH-00021, *Mechanical Handling Data Sheet, 24590-HLW-MJ-HEH-CRN-00001 - Cask Handling Crane.*
- 24590-HLW-M7-HEH-00001005, *HLW Vitrification System HEH Mechanical Handling Diagram Canister Export Handling System.*

3.2.1.1 Purpose

The purpose of the HLW truck bay cask handling crane is to lift an empty shielded canister shipping cask, using the product cask lifting beam (HEH-LIFT-00001), off its transport trailer and transfer it to the cask handling bogie, located in the cask handling tunnel H-B033B (Figure 8). After canister loading activities have been completed, the crane is used to carry the filled shipping cask to the truck bay for placement onto the transport trailer. The maximum loaded cask will not exceed 45 tons. The crane is also used to move a shielded drum cask containing a 55-gallon drum filled with radioactive solid waste using the same cask lifting beam, as well as general lifting activities of delivered goods from the truck bay into corridor.

Figure 8 HLW Cask Handling Crane (HEH-CRN-00001)

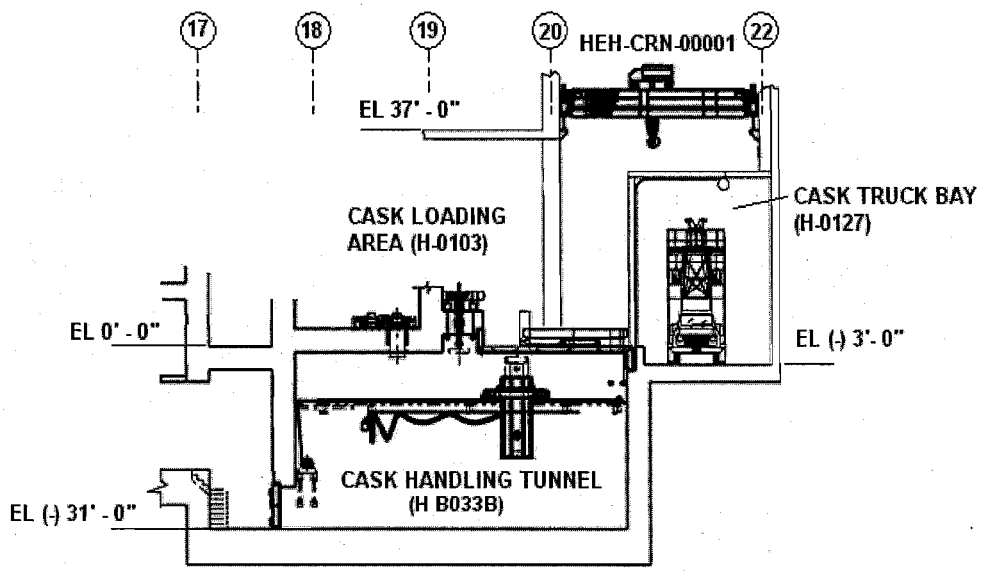

3.2.1.2 Description

The HLW truck bay cask handling crane is a digital radio controlled 60-ton rated load bridge crane. It is classified as an overhead, top running, double girder bridge crane (CMAA 70, Class D-Heavy Service), with a 15-ton auxiliary hoist and is designed for a service life of 40 years.

The runway length is 114 ft 3 in., and the runway span is 32 ft 4 in. The long travel of the crane is north/south, over the canister export truck bay (H-0127) on the east side of the HLW Facility while the cross travel is east/west. The main hook approach to the west side wall is 3 ft 3 in., and to the east side wall is 10 ft 9 in. The auxiliary hook approach to the west wall is 9 ft 3 in., and to the east wall is 4 ft 9 in. The crane includes a number of controls and design features to prevent potential damage to itself or other equipment (Section 3.1.5). There are no tanks or miscellaneous units within the operating path of the cask handling crane.

Power is provided to the crane via a cable festoon system tethered to the east end carriage of the bridge through to the north end of the runway. The 60-ton powered rotating hook has a two-speed variable frequency drive. The main hoist and auxiliary hoist have variable 0-12 ft/min drives. The main bridge

and the trolley each have a variable 0-40 ft/min drive. The bridge and trolley variable frequency drives provide controlled acceleration and deceleration rates to minimize load swing.

3.2.1.3 Crane Operation

The cask handling crane uses digital radio for the control method. The cask handling crane will lift and transport a shipping cask loaded with an HLW canister utilizing a lifting beam. The crane is used initially to lift an empty shipping cask off its transport trailer, and carry it to the cask handling bogie located in the cask handling tunnel. After loading activities have been completed, the crane is used to transfer the filled shipping cask to the cask truck bay for placement onto the transport trailer.

Fault indication lights and a light test pushbutton are provided on the front of the crane control cabinet and the crane control enclosure to indicate component failure.

3.2.1.4 Crane Interface Interlocks

There are no identified external equipment interface interlocks with the export crane, however see Section 3.2.2 for internal crane interlocks.

3.2.1.5 Crane Recovery

The HLW truck bay cask handling crane main hoist includes features that will permit manual operation of the hoisting system in an emergency. The system is designed to display the drum speed under a power loss condition to ensure that lowering can be accomplished in a controlled, safe manner from the emergency release station. Interrupting power to the hoist motor will cause the motor to stop and both the primary and emergency brakes to immediately set preventing loads from falling.

3.2.1.6 Crane Decontamination and Maintenance

All maintenance activities are performed in the cask truck bay. Personnel access is permitted when a cask/canister is not present. The cask handling crane includes a catwalk for maintenance and inspection located on the south side.

Permanently lubricated, sealed-for-life components are used wherever possible. Where not provided, lubrication systems are designed to be accessible to aid maintenance. Platforms on the crane provide access to all maintainable components on the bridge and trolley, including the two bridge-mounted flood lights.

3.2.2 Key Design Features

This section describes the key design features for the cask handling crane and gives a general description of operating procedures associated with the safe operation of the HLW crane, as identified in DWP Condition III.10.C.15.a.i.(B), which are included in the specification for the cask handling crane.

3.2.2.1 Allowed Bridge and Trolley Travel Path

The bridge has north and south limit switches and the trolley has east and west limit switches. The switches are used to slow down the bridge and trolley speed at either end of travel. Actuation of these limit switches will cause the frequency drive to operate at minimum speed.

3.2.2.2 Upper and Lower Hook Travel Limits

The main hoist lift is 46 ft 9 in., and the auxiliary hoist lift is 40 ft 3 in. The upper and lower hook travel is controlled by a four-position geared cam limit switch. The limit switch has an input shaft that drives a gear, which rotates the cam block. The cam block houses independently adjustable cams that actuate the precision-type snap action switches. The switch provides four single-pole, double-throw switches. The limit switch has the following four positions:

- **Normal Upper:** The hoist normal upper limit switch detects hoist drum rotations to provide the primary hoist-raising control limit. The switch is adjusted to actuate at the maximum required operational hook elevation. Actuation of this limit switch will disable primary hoist raising operation while lowering operations remain unaffected.
- **High Upper:** The hoist high upper limit switch detects hoist drum rotations to provide a secondary hoist-raising control limit. The switch is adjusted to actuate at a point above the trip set point of the normal hoist raising control travel limit switch. Actuation of this limit will disable hoist operation in both directions and cause the holding and emergency brakes to set. Recovery from the tripped condition is by use of a key in the reset key switch. The key switch allows the operator to bypass the alarm condition and lower the hoist to correct the fault. The cause of the high upper limit trip will be investigated and repaired before normal operation is resumed. Once the tripped condition is cleared the hoist can be returned to operation.
- **Lower:** The lower limit switch detects hoist drum rotations to provide the primary hoist-lowering control limit. The switch is adjusted to actuate at the minimum required operational hook elevation. Actuation of this limit switch will disable primary hoist lowering operation while raising operations remain unaffected. The lower limit switch is adjusted to ensure that a minimum of two wraps remain on the drum at the lowest hook elevation.
- **Slow-down:** The slow-down limit switch detects hoist drum rotations to provide control in the hoist-raising slow-down zone. The switch is adjusted to actuate as the hoist approaches the maximum required operational hook elevation. Actuation of this limit switch will restrict hoist speed control to minimum speed in raising operations, while hoist speed control in lowering operations remains unaffected.

3.2.2.3 Two-Blocking Prevention

Two-blocking occurs whenever the load block comes into physical contact with the trolley frame. Two-blocking can cause the wire rope, rigging, reeving, and other components to become highly stressed and over loaded, in which case the wire rope may fail, allowing the load, block, etc., to free-fall.

Both the main hoist and the auxiliary hoist have high and high-high limit switches to prevent two-blocking. The first limit switch is a control circuit device. Actuation of this switch will disable power to the motor and set the hoist brakes, preventing further hoisting operations. This switch does not prevent lowering operations.

The high-high limit switch is a power circuit block activated type. It interrupts all power to the hoist motor and hoist brakes and prevents further hoisting or lowering operation. To re-establish operation, a key switch allows the operator to bypass the alarm condition in order to correct the fault condition by

lowering the hoist past the first limit. Once the tripped condition is cleared the hoist can be returned to operation.

3.2.2.4 Hook Load Limits

The main hoist has an overload detection device that clamps to the wire rope. The set point is approximately 115 % to 120 % of the lifted load to provide a margin for acceleration. A key switch is provided to bypass the overload device for load testing.

3.2.2.5 Wire Rope Misreeving

Wire rope misreeving protection is provided for the HLW truck bay cask handling crane. The main hoist includes a photoelectric sensor that is hardwired to detect misreeving using relay logic. Sheaves are provided with close-fitting guards for guiding the rope into the drum grooves. Actuation will disable hoist operation in both directions and cause the holding and emergency brakes to set.

3.2.2.6 Overspeed Protection

The main hoist drum overspeed detection system identifies an overspeed condition in the event of a hoist drive train failure. When an overspeed condition is detected, the switch is configured to disable the main hoist motor and set the brakes. The set point has a minimum adjustable range from 75 % to 115 % of the hoist's rated speed and trips at 115 % without intentional delay. The drum overspeed protection switch is hardwired to initiate the brake system using relay logic.

3.3 HLW Crane Control

This section presents a review of the methods available to control the HLW cranes. The intent of this section is to provide an overview of the operational procedures during normal operations and a review of the crane control equipment. There are two main methods to control the cranes. They can be controlled by the HLW ICN, or through the local control panels for each crane. An exception is the cask handling crane which could also be radio controlled.

3.3.1 HLW Integrated Control Network and HLW Crane Control Room

The HLW ICN is the real-time control and data acquisition platform responsible for process operation and control, and for alarming and notification functions. While it is not the only control system in the HLW Facility, it is the only remote computer control system used to operate the cranes. With respect to the HLW cranes, the ICN provides the ability to: 1) control the CCTV cameras; 2) monitor the status of the cranes; 3) control the motion of the cranes; and 4) control related equipment such as shield doors and hatches.

The ICN is accessed through the HLW CCR, H-A201A. The HLW CCR is adjacent to the HLW FCR, H-A201. There is one crane control console with an operator at the console. The HLW cranes are controlled from the HLW CCR during normal operation.

The crane operator console is equipped with process and mechanical handling CCTV system (PTJ) monitors and an ICN monitor. Each console is also equipped with operator-interface equipment very similar or identical to that used for the local operator interfaces, including joysticks, control switches, and displays for control of mechanical handling equipment.

The console is equipped with video monitors to view CCTV video. These cameras are located on the cranes and within the rooms that the cranes operate in. The operator can select the desired camera view to display and can control the pan, tilt, and zoom functions of each camera. These cameras provide the only view of the crane operation to the operator in the CCR.

The console can display the status information from the cranes. This includes information from the encoders, switches, load cells, condition and status flags, temperatures, and alarms. These instrument readings allow the operator to monitor the status and performance of the cranes.

The console has an operator interface that includes joysticks, switches, and displays for control of the HLW cranes and other remote equipment items in and around the crane rooms (i.e., hatches and shield doors). These input devices are used to control the crane bridge, trolley, and hoist movement.

3.3.2 Local Crane Control

The HLW cranes can be controlled from their respective local control panel. The local control panel can control all crane functions including the primary and recovery drives for the bridge, trolley, hoist and recovery jacks.

The following table provides the location of the HLW crane's control panels:

Crane	Control Panel	Location
HPH-CRN-00001	HPH-PNL-00006	H-0331
HPH-CRN-00002	HPH-PNL-00007	H-0331
HDH-CRN-00005	HDH-PNL-00017	HC0304
HEH-CRN-00003	HEH-PNL-00005	HC0109
HSH-CRN-00001	HSH-PNL-00014	H-0208
HSH-CRN-00014	HSH-PNL-00021	H-0208
HEH-CRN-00001	HEH-PNL-30009	HC0109

A key switch, located on the front of each control panel, is used to switch the crane control system between local, remote, and radio-control modes (where provided). When the switch is indexed to the local position, crane operation is controlled through the operation switches mounted on the face of the main control enclosure. When the switch is indexed to the radio position, the radio control transmitter will function to operate the crane system. Indexing the switch to the remote position will enable crane operation through the crane ICN controller. Selecting an operating mode disables the other two modes.

3.4 HLW Canister Grapple

(HDH-TOOL-00001/4, HEH-TOOL-00001, HPH-TOOL-00001/17/18, HSH-TOOL-00004/52)

The HLW canister grapple is a three-jaw lifting device designed to engage the underside of the canister flange (Figure 9). The jaws are opened and closed mechanically by a combination of linkages, slides, and a rotating ratchet assembly. The mechanism is actuated by a plate that contacts the canister flange as the grapple is lowered onto the top of the canister, causing the jaws to close. To retract the jaws, the weight of the canister has to be removed from the grapple twice before the jaws will retract and release the canister. This two "set-down" arrangement is designed to prevent inadvertent release of the canister should the canister be lowered onto an obstruction. A position indicator is provided on top of the grapple

to show the operator where the grapple is in the "set-down" sequence. An MSM-operated override is provided to release the grapple from a canister should the sequencing mechanism fail to retract the jaws. The grapple has a rated lifting capacity of 10,000 lb.

Figure 9 HLW Canister Grapple

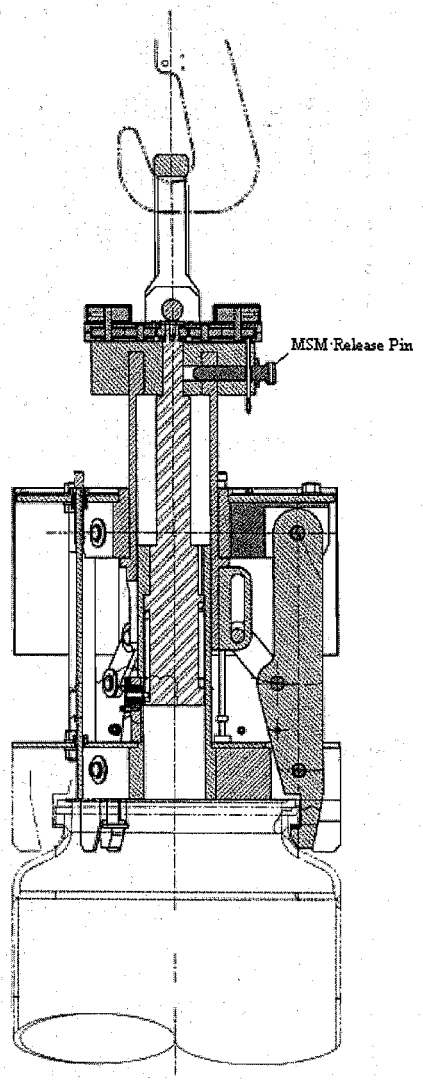

4 Applicable Documents

24590-HLW-3YD-HDH-00002, *System Description for the HLW System HDH Canister Decontamination Handling.*

24590-HLW-3YD-HEH-00001, *System Description for the HLW System HEH Canister Export Handling.*

24590-HLW-3YD-HPH-00001, *System Description for the HLW System HPH Canister Pour Handling.*

24590-HLW-3YD-HSH-00001, *System Description for the System HSH - HLW Melter Cave Support Handling.*

24590-HLW-M0D-HDH-00021, Mechanical Handling Data Sheet, *24590-HLW-MJ-HDH-CRN-00005 - Decontamination Swabbing and Monitoring Crane.*

24590-HLW-M0D-HEH-00009, Mechanical Handling Data Sheet, *24590-HLW-MJ-HEH-LIFT-00001 - Product Cask Lifting Beam.*

24590-HLW-M0D-HEH-00021, Mechanical Handling Data Sheet, *24590-HLW-MJ-HEH-CRN-00001 - Cask Handling Crane.*

24590-HLW-M0D-HEH-00025, *Mechanical Handling Data Sheet, 24590-HLW-MJ-HEH-CRN-00003 - Canister Storage Crane.*

24590-HLW-M0D-HPH-00063, *Mechanical Handling Data Sheet, 24590-HLW-MJ-HPH-CRN-00002 - Canister Handling Crane (Upper).*

24590-HLW-M0D-HPH-00064, *Mechanical Handling Data Sheet, 24590-HLW-MJ-HPH-CRN-00001 - Canister Handling Crane (Lower).*

24590-HLW-M0D-HSH-00013, *Mechanical Handling Data Sheet, 24590-HLW-MJ-HSH-CRN-00001 - Melter 1 Cave Crane.*

24590-HLW-M0D-HSH-00181, *Mechanical Handling Data Sheet, 24590-HLW-MJ-HSH-CRN-00014 - Melter 2 Cave Main Crane.*

24590-HLW-M7-HDH-00001005, *HLW Vitrification System HDH Mechanical Handling Diagram Canister Decontamination Handling System.*

24590-HLW-M7-HEH-00001004, *HLW Vitrification System HEH Mechanical Handling Diagram Canister Export Handling System.*

24590-HLW-M7-HEH-00001005, *HLW Vitrification System HEH Mechanical Handling Diagram Canister Export Handling System.*

24590-HLW-M7-HPH-00001001, *HLW Vitrification System HPH Mechanical Handling Diagram Canister Pour Handling Canister Handling Cave.*

24590-HLW-M7-HPH-00001002, *HLW Vitrification System HPH Mechanical Handling Diagram Canister Pour Handling Canister Handling Cave.*

24590-HLW-M7-HSH-00001002, *HLW Vitrification System HSH Mechanical Handling Diagram Melter Cave Support Handling Melter Cave 1.*

24590-HLW-M7-HSH-00002002, *HLW Vitrification System HSH Mechanical Handling Diagram Melter Cave Support Handling Melter Cave 2.*

24590-LAW-3YD-LEH-00001, *System Description for the LEH LAW Container Export Handling.*

24590-LAW-3YD-LPH-00001, *System Description for the LAW Container Pour Handling (LPH) System.*

24590-LAW-M0D-LEH-00014, *24590-LAW-MJ-LEH-CRN-00003 - LEH Crane Export High Bay with Recovery, 10 ton.*

24590-LAW-M0D-LPH-00003, *24590-LAW-MJ-LPH-CRN-00002 - Top Running, Double Girder.*

24590-LAW-M7-LEH-00002002, *LAW Vitrification System LEH Mechanical Handling Diagram Container Export Handling System.*

24590-LAW-M7-LPH-00001004, *LAW Vitrification System LPH Mechanical Handling Diagram Container Pour Handling System.*

Appendix A

Summary of Key Design Features

Summary of Key Design Features

Crane	Normal Upper Limit	Two-Blocking Prevention	Slow-down Limit (Low)	Lower Limit (Low-Low)	High-High Upper Limit	Wire Rope Misreeving	Overspeed Protection	Overload Protection				Functional Description
		High Upper Limit						Unbalanced	90% Load Limit	110% Load Limit	Load Cell	
LPH-CRN-00002	LPH-QT-6858	LPH-ZS-6827	N/A	LPH-QT-6858	LPH-ZS-6826	LPH-ZS-6828	LPH-SY-6863	N/A	N/A	N/A	LPH-WE-6825	24590-CM-POA-MJKG-00003-11-01
LPH Recovery Hoist	N/A	LPH-ZS-6862	N/A	N/A	N/A	N/A	LPH-SY-6864	N/A	N/A	N/A	LPH-WE-6865	24590-CM-POA-MJKG-00003-11-01
LEH-CRN-00003	LEH-QT-0133	LEH-ZS-0135	N/A	LEH-QT-0133	LEH-ZS-0134	LEH-ZS-0162	LEH-SE-0182	N/A	N/A	N/A	LEH-WE-0131	24590-CM-POA-MJKG-00003-11-00002
LEH Recovery Hoist	N/A	LEH-ZS-0183	N/A	N/A	N/A	N/A	N/A	N/A	N/A	N/A	N/A	24590-CM-POA-MJKG-00003-11-00002
HPH-CRN-00001	HPH-ZS-0420	HPH-ZS-0420	HPH-ZS-0420	HPH-ZS-0420	HPH-ZS-0421	HPH-ZS-0424A/B	HPH-SS-0418	HPH-ZS-0422	HPH-WS-0415	HPH-WS-0413	HPH-WE-0414/0416	24590-QL-POA-MJKG-00002-07-00042
HPH-CRN-00002	HPH-ZS-0320	HPH-ZS-0320	HPH-ZS-0320	HPH-ZS-0320	HPH-ZS-0321	HPH-ZS-0324A/B	HPH-SS-0318	HPH-ZS-0322	HPH-WS-0315	HPH-WS-0313	HPH-WE-0314/0316	24590-QL-POA-MJKG-00002-07-00041
HDH-CRN-00005	HDH-ZS-3130	HDH-ZS-3130	HDH-ZS-3130	HDH-ZS-3130	HDH-ZS-3131	HDH-ZS-3133A/B	HDH-SS-3160	HDH-YS-3184	HDH-WS-3182	HDH-WS-3183	N/A	24590-QL-POA-MJKG-00002-07-00043
HEH-CRN-00003	HEH-ZS-2530	HEH-ZS-2530	HEH-ZS-2530	HEH-ZS-2530	HEH-ZS-2531	HEH-ZS-2533A/B	HEH-SS-2547	HEH-ZS-2532	HEH-WS-2526	HEH-WS-2524	N/A	24590-QL-POA-MJKG-00002-07-00044
HSH-CRN-00001	HSH-ZS-1340	HSH-ZS-1340	HSH-ZS-1340	HSH-ZS-1340	HSH-ZS-1341	HSH-ZS-1343A/B	HSH-SS-1355	HSH-ZS-1342	HSH-WS-1334	HSH-WS-1335	HSH-WE-1389A/B	24590-QL-POA-MJKG-00002-07-00048
HSH-CRN-00014	HSH-ZS-4849	HSH-ZS-4849	HSH-ZS-4849	HSH-ZS-4849	HSH-ZS-4850	HSH-ZS-4852A/B	HSH-SS-4861	HSH-ZS-4855	HSH-WS-4843	HSH-WS-4844	HSH-WE-4888A/B	N/A
HEH-CRN-00001	HEH-ZS-2709	HEH-ZS-2709	HEH-ZS-2709	HEH-ZS-2709	HEH-ZS-2725	HEH-ZS-2726A/B	HEH-SS-2729	N/A	N/A	N/A	HEH-WS-2727	N/A
HEH Auxiliary Hoist	HEH-ZS-2745	HEH-ZS-2745	HEH-ZS-2745	HEH-ZS-2745	HEH-ZS-2746	N/A	N/A	N/A	N/A	N/A	N/A	N/A