R10111501

DOCUMENT INFORMATION

The following information is required when submitting a document to PDC for issuance.	**Correspondence (CCN) No:** _____
	Document No: 24590-WTP-PER-PS-02-001
	Rev: 4

Project Information (Check Applicable Box)

☐ Balance of Facilities ☐ HLW Vitrification ☐ Analytical Laboratory ☒ Across all areas

☐ Pretreatment ☐ LAW Vitrification ☐ External Interfaces

Document is applicable to ALARA (as determined by the originator)? ☒ Yes ☐ No

Applicability to ALARA means that the item has the potential to affect doses, contamination levels, or releases to the environment. (See 24590-WTP-GPP-SRAD-002, *Application of ALARA in the Design Process*, sections 4.1 and 4.2 for more information.)

Subject code(s): _____ (for correspondence only)

ACTION ITEM INFORMATION (for correspondence other than meeting minutes)

Commitments: ☐ Yes ☐ No (if yes, brief description below)

_____

_____

Tracked by RITS

Commitment Owed to: _____ Due Date: _____

Actionee(s)			

Tracked by PADC

Written Response Required: ☐ Yes ☐ No

Owed to: _____ Due Date: _____

This correspondence closes action on Correspondence Number _____

☐ Subcontract Files _____ Copies

☐ PAAA Coordinator MS14-4B

☐ Contains SENSITIVE Information

Additional Departmental Info (to facilitate keyword search)

Internal ☐ DNFSB ☐ ORP ☐ OSR ☐ WDOE ☐ WDOH ☐ Other _____

Special Instructions for PDC

Submitted to PDC w/o A Master Distribution Schedule

LA 8/14/03

8/14/03

☒ Processed Data Entry ☐ Copied QA ☐ Scanned ☐ Filed

Document title: **Ancillary Equipment Pipe Support Design**

Contract deliverable number: Contract deliverable number; if none, delete table row

Contract number: DE-AC27-01RV14136

Department: Department title

Author(s): Jack Shen

ISSUED BY RPP-WTP PDC 8/14/03 INIT DATE

Principal author signature:

Document number: 24590-WTP-PER-PS-02-001, Rev 4

Checked by: Jeffery Miller

Checker signature:

Date of issue: 13 August 2003

Issue status: Issued for Permitting Use

Approved by: Mark Myatt

Approver's position: Discipline Engineering Manager

Approver signature:

JACK KWANG-DOW SHEN STATE OF WASHINGTON 29840 REGISTERED PROFESSIONAL ENGINEER

EXPIRES: 6-25-2004

08/13/03

This bound document contains a total of 14 sheets

River Protection Project
Waste Treatment Plant
2435 Stevens Center Place
Richland, WA 99352
United States of America
Tel: 509 371 2000

Notice

Please note that source, special nuclear, and byproduct materials, as defined in the Atomic Energy Act of 1954 (AEA), are regulated at the US Department of Energy (DOE) facilities exclusively by DOE acting pursuant to its AEA authority. DOE asserts, that pursuant to the AEA, it has sole and exclusive responsibility and authority to regulate source, special nuclear, and byproduct materials at DOE-owned nuclear facilities. Information contained herein on radionuclides is provided for process description purposes only.

History Sheet

Rev	Date	Reason for revision	Revised by
0	09/06/02	Issue for Permitting Use	Jack Shen
1	12/19/02	Including Mixed Waste Transfer Pipe Support Details	Jack Shen
2	04/07/03	Issued for Permitting Use	Jack Shen
3	07/25/03	Issued for Permitting Use	Jack Shen
4	08/13/03	Issued for Permitting Use	Jack Shen

Contents

1 Introduction 1
2 Applicable Documents 1
2.1 Codes and Standards 1
3 Description 1
3.1 Design Methodology, Material, Loads, and Load Combinations 1
3.2 Mixed Waste Transfer Lines 2
3.3 Typical Details 3

Figures

Figure 1 Typical Pipe Standard Support Detail 1 ---------- 4
Figure 2 Typical Pipe Standard Support Detail 2 ---------- 5
Figure 3 Typical Pipe Engineered Support Detail 1 ---------- 6
Figure 4 Typical Mixed Waste Transfer Pipe Support and Fabrication Details ---------- 7
Figure 5 Typical Mixed Waste Transfer Piping Installation and Fabrication Details ----- 8
Figure 6 Typical Mixed Waste Transfer Line Wall Penetration Details ---------- 9
Figure 7 Typical Pipe Fabrication Drawing with Pipe Supports ---------- 10

1 Introduction

In compliance with the Washington Administrative Code (WAC) 173-303 WTP dangerous waste tank systems have been designed to retain dangerous waste through a confinement system designed with sufficient strength and compatibility with the waste to ensure that it will not collapse, rupture, or fail.

This report describes and provides references to the design criteria, load definitions, load combinations, material of construction, and methodology for the analysis/design of Pretreatment (PT), High Level Waste (HLW), Low Activity Waste (LAW), and Analytical Laboratory (LAB) buildings with emphasis on ancillary equipment pipe supports. Several representative typical details of standard and engineered pipe supports, and one typical pipe fabrication drawing with pipe supports are included in this report.

2 Applicable Documents

2.1 Codes and Standards

2.1.1 ASME B31.3 Code, Process Piping.1996 Edition
2.1.2 ASME Boiler and Pressure Vessel Code, Section III
2.1.3 AISC M016-89 Manual of Steel Construction – Allowable Stress Design, ninth edition
2.1.4 AWS-D1.1 & -D1.6, Structural Welding Code
2.1.5 UBC, Uniform Building Code, 1997
2.1.6 MSS-SP-58, Pipe Hangers And Supports - Materials, Design And Manufacture
2.1.7 MSS-SP-69, Pipe Hangers And Supports - Selection And Application
2.1.8 MSS-SP-89, Pipe Hangers And Supports - Fabrication And Installation Practices
2.1.9 Safety Requirements Document, Volume II, 24590-WTP-SRD-ESH-001-02, Rev. 1d.

3 Description

3.1 Design Methodology, Material, Loads, and Load Combinations

Methodology	Codes and specifications: • PT, HLW, LAW, and LAB: General: ASME B31.3 (Ref. 2.1.1) ASME Section III, NF (Ref. 2.1.2) UBC (Ref. 2.1.5) Steel: AISC (Ref. 2.1.3)
Dead Loads and Thermal loads:	ASME B31.3 (Ref. 2.1.1) and SRD (Ref. 2.1.9)

Seismic Loads	• PT, HLW, and LAB: Site specific response spectra as specified in SRD (Ref. 2.1.9). Seismic Zone 2B (UBC, Ref. 2.1.5) • LAW: Seismic Zone 2B (UBC, Ref. 2.1.5)
Materials, Design And Manufacture	
• Steel	MSS-SP-58 (Ref. 2.1.6)
Selection & Application	
• Steel	MSS-SP-69 (Ref. 2.1.7)
Fabrication & Installation	
• Steel	MSS-SP-89 (Ref. 2.1.8)
Load Combinations	
• Steel	Normal Operating Loads – Weight, or Weight + Thermal Occasional Loads – Normal Operating + Earthquake, or Normal Operating + Wind, or Normal Operating + Other Fluid Transient Load if exists
Special Protective Coating	Material for coatings will be compatible with the hazardous waste.

3.2 Mixed Waste Transfer Lines

Mixed Waste Transfer lines are buried in the ground. They are double containment piping consisting of 3" carrier piping and 6" encasement piping. They are analyzed according to ASME B31.3 Code for the design loads including weight effects, thermal expansion effects due to operating and environment temperature variations, seismic inertial and seismic anchor movement effects, and building settlement. In the seismic response spectrum analysis and flexibility analyses of 6" encasement piping, the soil properties are considered as soil springs and modeled in vertical, axial and lateral directions along the piping. In addition, the 6" encasement piping is also analyzed for seismic wave passage effects and vertical earth loads.

The 6" encasement piping is anchored by an anchor plate welded at the building wall penetration. Each anchor is designed for the total combined loadings from the buried double containment piping and the piping inside the building. The 3" carrier piping is supported by weight supports (one way-vertical support), plate type guide supports (two way-vertical and lateral supports) and three way supports (vertical, lateral and axial supports) as required. Those supports are installed between the 3" and 6" piping, and are required to limit the 3" pipe stresses and deflections so that the 3" and 6" piping will not interact with each other during operating conditions and an earthquake event. A weight support is a steel member welded to the side wall of 6" pipe. A plate type guide support is a steel plate welded to 3" pipe and cut to contact with the inside wall of the 6" pipe on both sides, at the lower half section. A three way support is provided by welding 4 lugs on the 6" pipe, two on each side of the plate type guide support. A

clearance at the bottom is maintained for every one of these supports so that it will not block potential drainage inside the 6" piping.

3.3 Typical Details

Figures 1 through 7 show several representative details related to ancillary equipment pipe support details and typical pipe fabrication drawing for PT, HLW, LAW, and LAB buildings.

Figure 1 – Typical Pipe Standard Support Detail 1

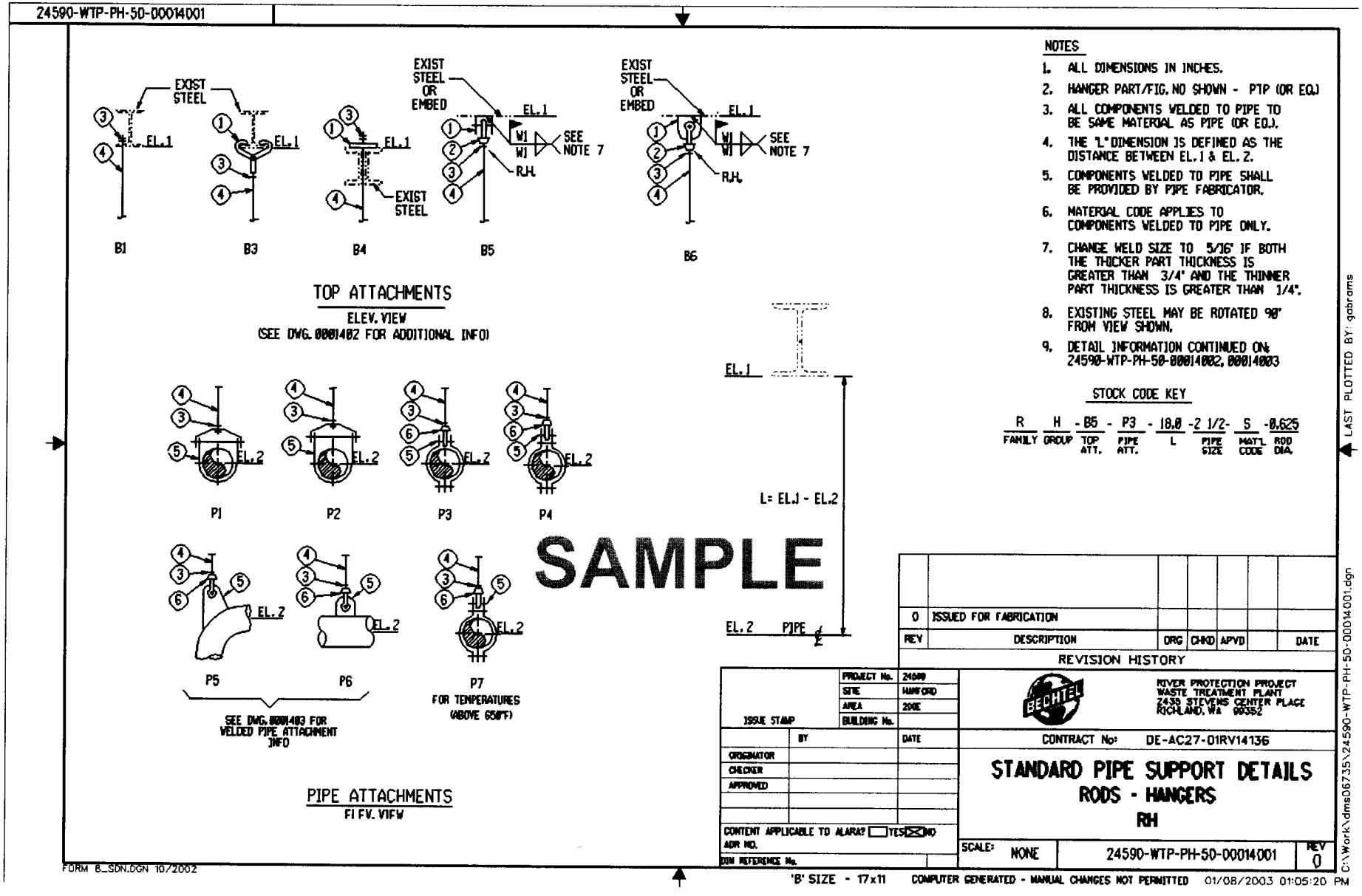

Figure 2 – Typical Pipe Standard Support Detail 2

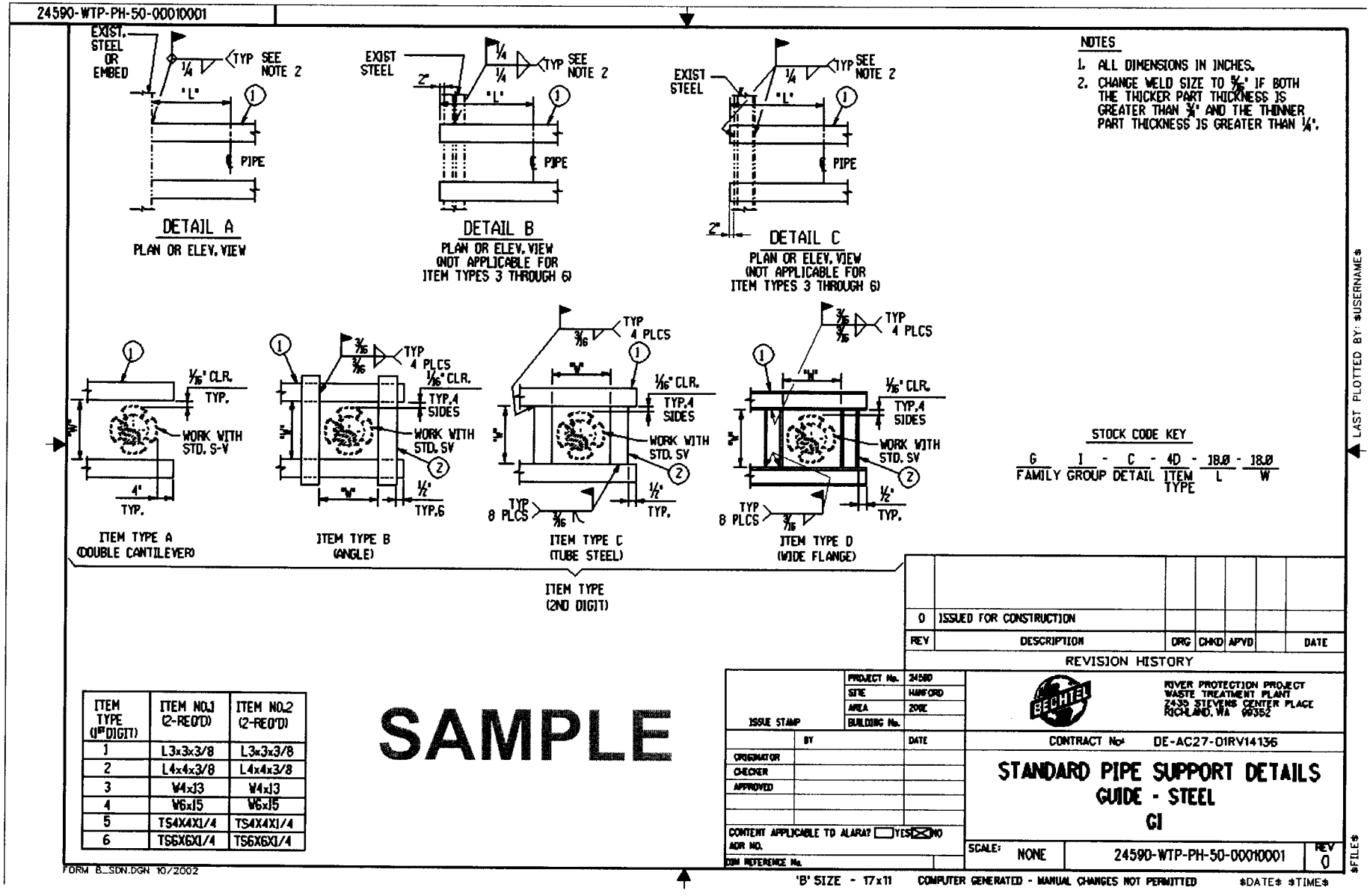

ITEM TYPE (1ST DIGIT)	ITEM NO.1 (2-REQ'D)	ITEM NO.2 (2-REQ'D)
1	L3x3x3/8	L3x3x3/8
2	L4x4x3/8	L4x4x3/8
3	W4x13	W4x13
4	W6x15	W6x15
5	TS4X4X1/4	TS4X4X1/4
6	TS6X6X1/4	TS6X6X1/4

Figure 3 – Typical Pipe Engineered Support Detail 1

ITM	QTY	DESCRIPTION
1.	2	L3X3X3/8 Length: 4'
2.	1	W6X20 Length: 4'-6 3/4"
3.	1	Plate 1/2" x 6-3/4" x 1'-0-1/2' Long (MAT'L A 36)
4.	2	W4X13 Length: 1'-10 11/16"
5.	2	W4X13 Length: 6 3/4"

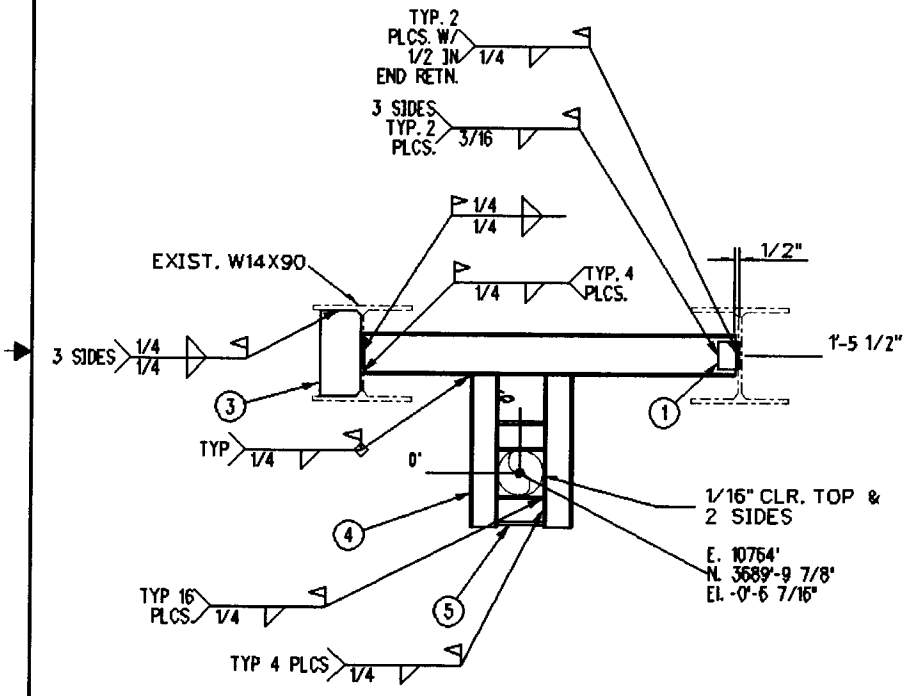

ELEVATION LOOKING NORTH

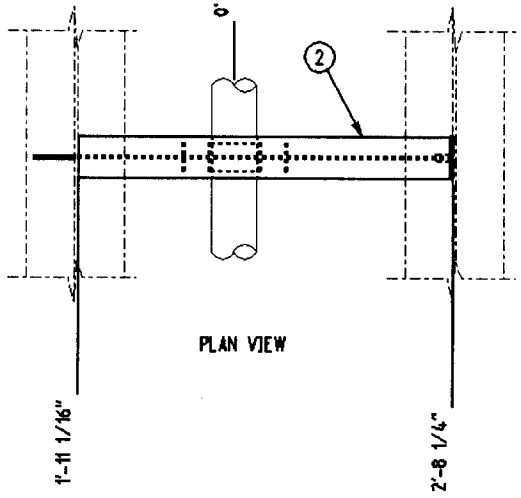

PLAN VIEW

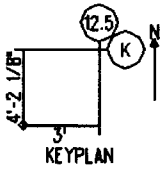

KEYPLAN

CONST. AREA: 10H

LINE SEQUENCE NO: NLD-WT-01477-S11B-6

STOCK CODE(S): LAW-NLD-H00077

NOTES:

1. FIELD WELDS REPRESENTED W/ HOLLOW FLAG
2. SUPPORT PAINTING REQUIREMENT
   ☒ INDOORS ☐ OUTDOORS

SAMPLE

CM
QUALITY LEVEL

BECHTEL
RIVER PROTECTION PROJECT
WASTE TREATMENT PLANT
2435 STEVENS CENTER PLACE
RICHLAND, WA 99352

CONTRACT No: DE-AC27-01RV14136
JOB No: 24590

CONTENT APPLICABLE TO ALARA? ☐ YES ☒ NO
ADR NO. REV

REV	DESCRIPTION	DRN	CHKD	RVWD	APVD	DATE
0	ISSUED FOR CONSTRUCTION					

SEIS CAT	PIPE SUPPORT DWG No.	REV
SC-III	24590-LAW-NLD-H00077	0

FORM B_SUP.DGN 5/2003

COMPUTER GENERATED - MANUAL CHANGES NOT PERMITTED 06/12/2003 01:43:05 PM

C:/Work/dms06980\NLD_WT_01477_S11B_6_LAW-NLD-H00077_0.sht

Figure 4 – Typical Mixed Waste Transfer Pipe Support and Fabrication Details

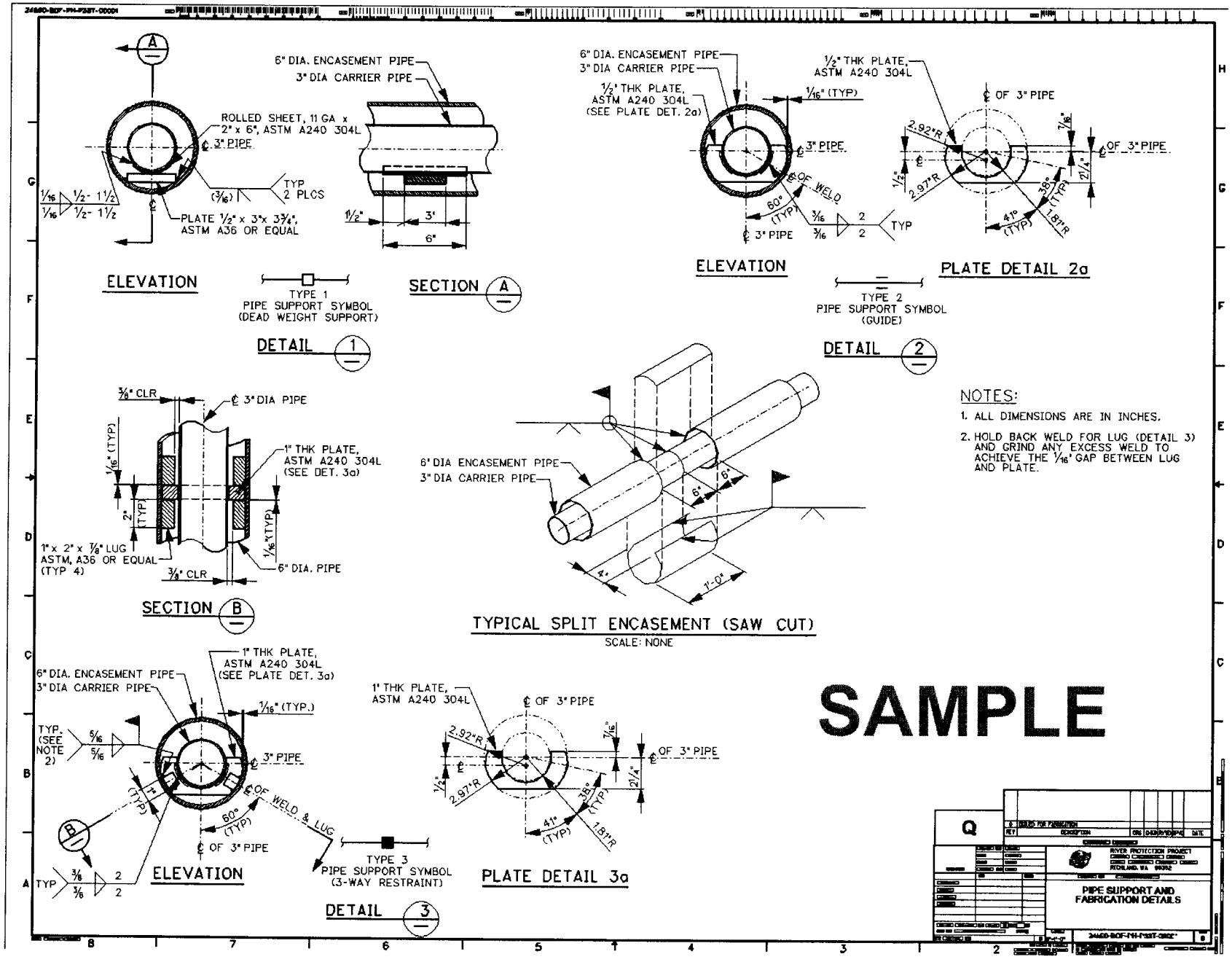

Figure 5 – Typical Mixed Waste Transfer Piping Installation and Fabrication Details

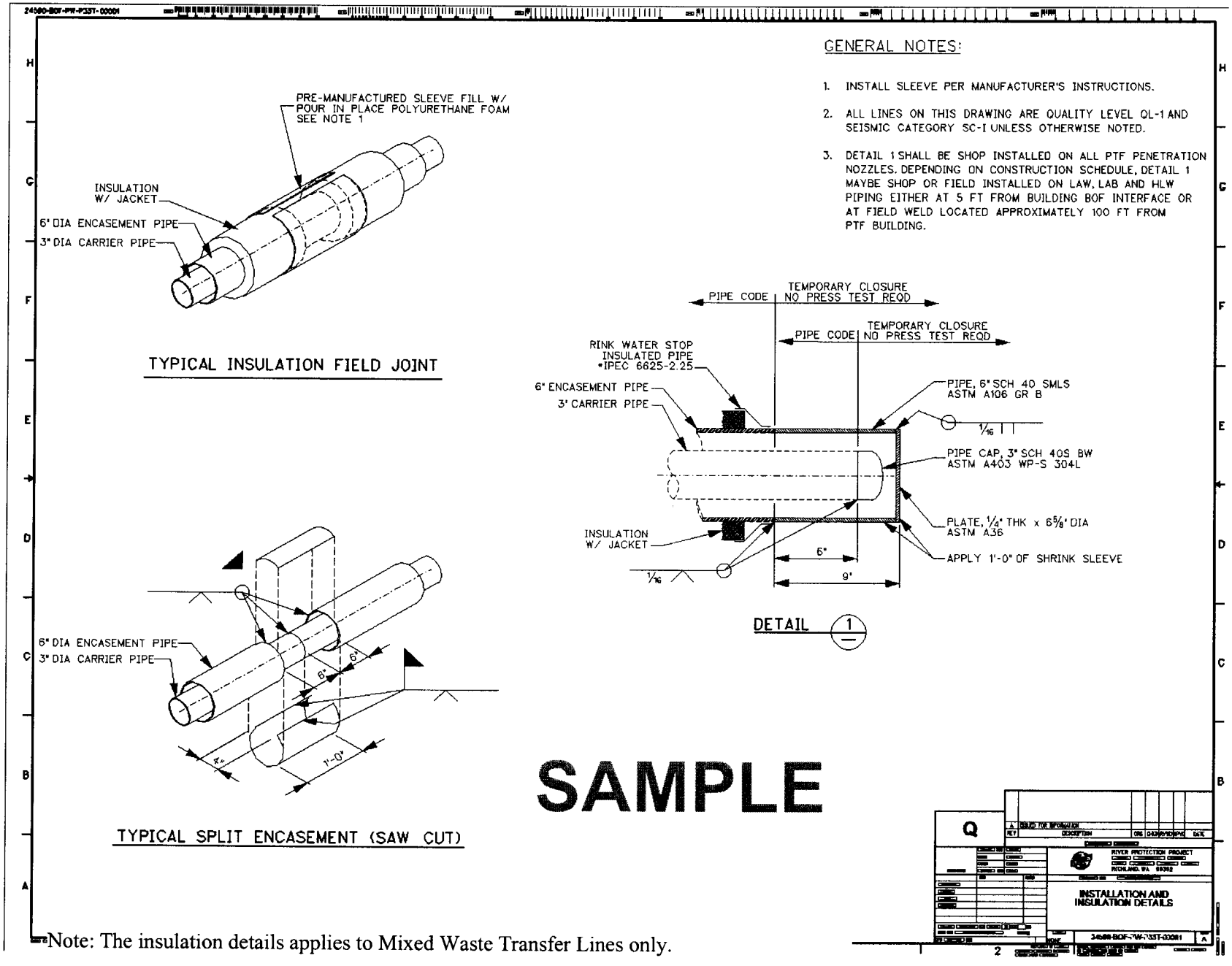

Note: The insulation details applies to Mixed Waste Transfer Lines only.

Figure 6 – Typical Mixed Waste Transfer Line Wall Penetration Details

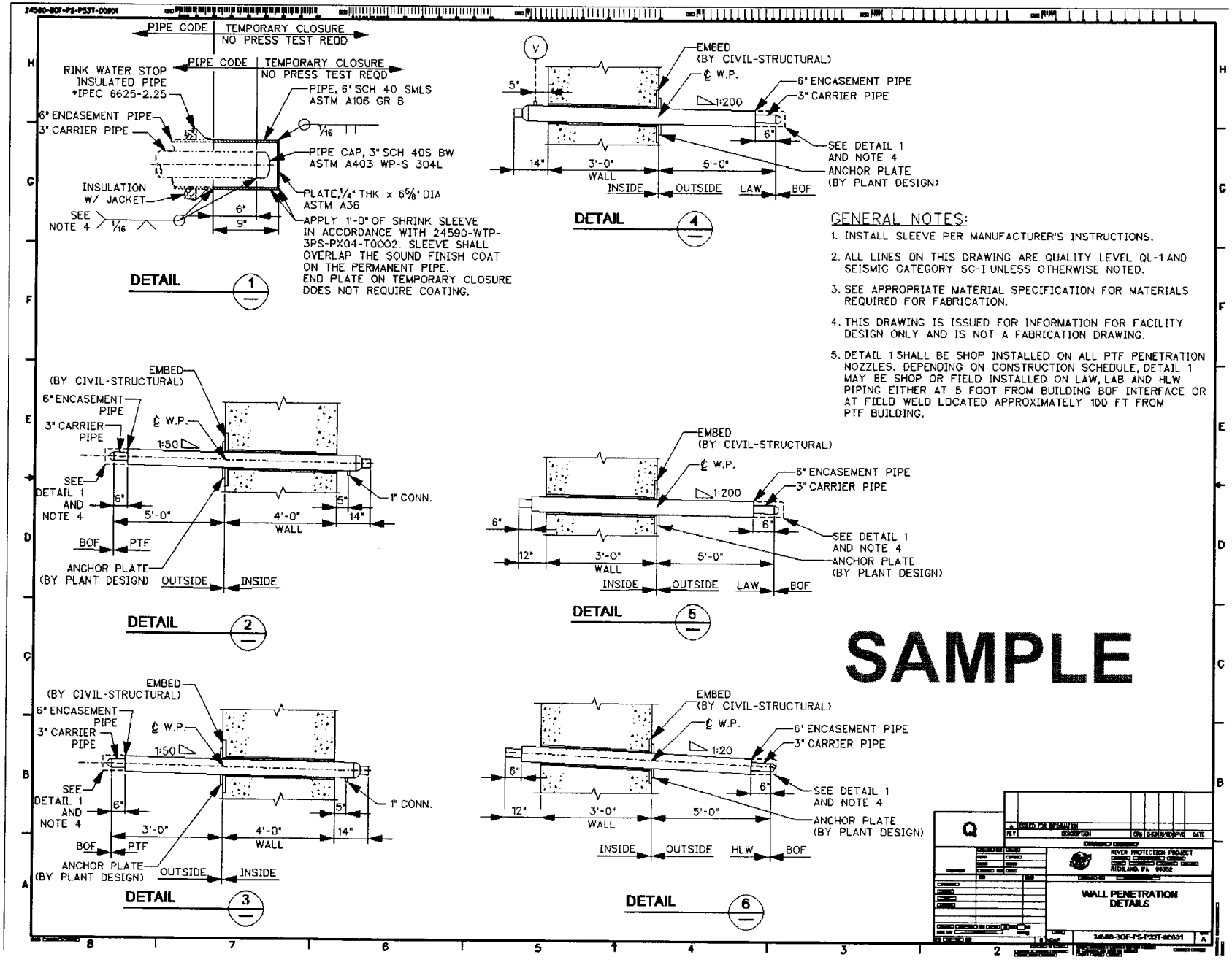

GENERAL NOTES:

1. INSTALL SLEEVE PER MANUFACTURER'S INSTRUCTIONS.
2. ALL LINES ON THIS DRAWING ARE QUALITY LEVEL QL-1 AND SEISMIC CATEGORY SC-I UNLESS OTHERWISE NOTED.
3. SEE APPROPRIATE MATERIAL SPECIFICATION FOR MATERIALS REQUIRED FOR FABRICATION.
4. THIS DRAWING IS ISSUED FOR INFORMATION FOR FACILITY DESIGN ONLY AND IS NOT A FABRICATION DRAWING.
5. DETAIL 1 SHALL BE SHOP INSTALLED ON ALL PTF PENETRATION NOZZLES. DEPENDING ON CONSTRUCTION SCHEDULE, DETAIL 1 MAY BE SHOP OR FIELD INSTALLED ON LAW, LAB AND HLW PIPING EITHER AT 5 FOOT FROM BUILDING BOF INTERFACE OR AT FIELD WELD LOCATED APPROXIMATELY 100 FT FROM PTF BUILDING.

SAMPLE
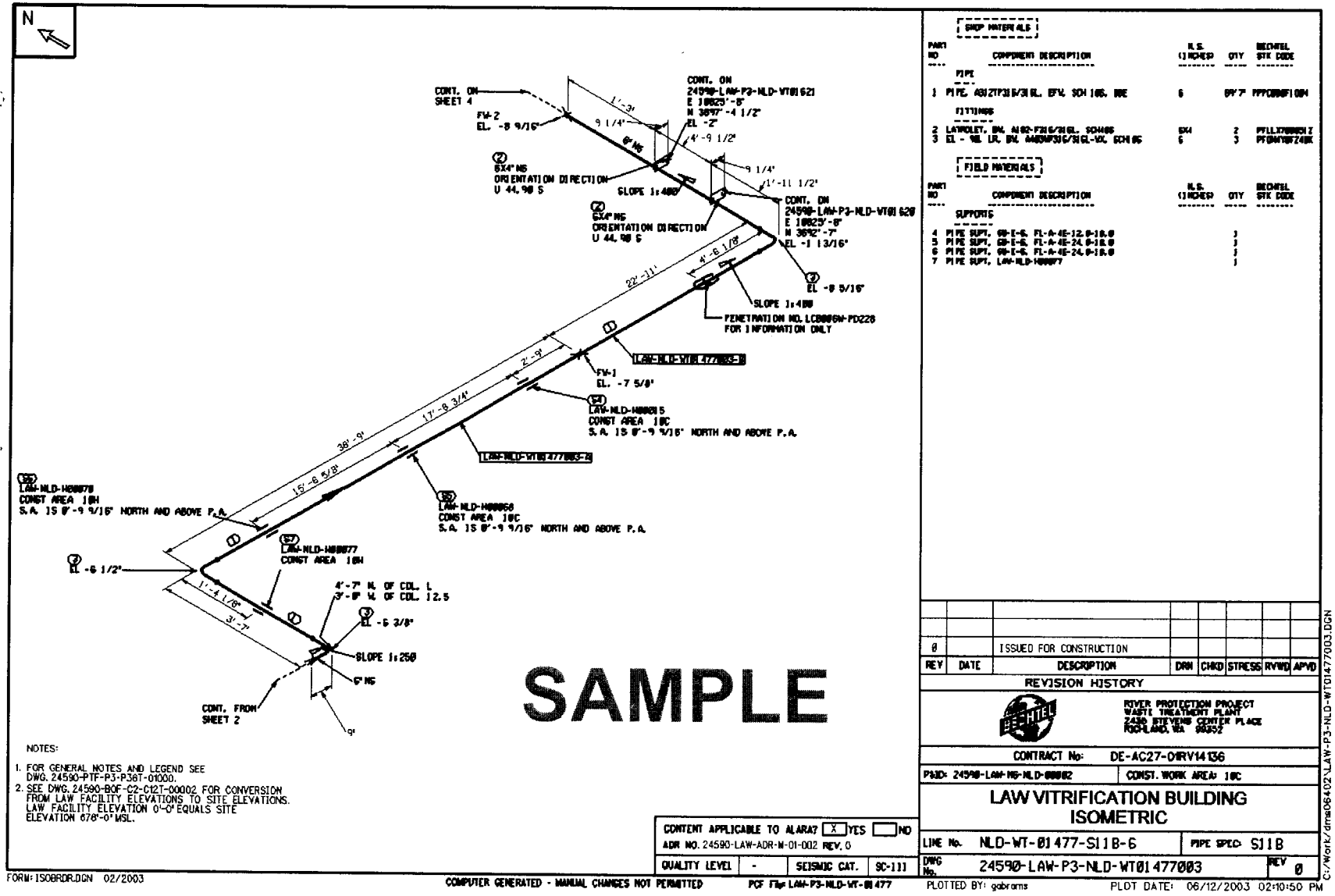
Figure 7 – Typical Pipe Fabrication Drawing with Pipe Supports