Drawing Change Notice

Page 1 of 4

CHANGE DOCUMENT NO.
24590-PTF-VDCN-MS-10-00008

ISSUED BY RPP-WTP PDC

R1307068

JOB NO.	TITLE FOR CHANGE NOTICE
24590	UFP-VSL-00062B Redesign

DESIGN DOCUMENT NUMBER	REV	DESIGN DOCUMENT NUMBER	REV
24590-QL-POD-MVA0-00001-03-04	F	24590-QL-POD-MVA0-00001-03-05	F
24590-QL-POD-MVA0-00001-03-06	F	24590-QL-POD-MVA0-00001-03-30	G
24590-QL-POD-MVA0-00001-03-31	E	24590-QL-POD-MVA0-00001-03-32	E
24590-QL-POD-MVA0-00001-03-33	E	24590-QL-POD-MVA0-00001-03-34	E
24590-QL-POD-MVA0-00001-03-42	B	24590-QL-POD-MVA0-00001-03-43	B

PART OF DESIGN CHANGE PACKAGE (DCP)? ☐ Yes ☒ No DCP No.: N/A Rev:

JUSTIFICATION FOR CHANGE	CAUSE CODE
Based on the re-analysis of UFP-VSL-00062B, per calculation 24590-PTF-MVC-UFP-00023, for revised seismic conditions and design evolution, required a redesign of the vessel.	01 and 23

Supersedes Change Document ☐ Yes ☒ No

ECN Needed ☐ Yes ☒ No

REQUIREMENTS REVIEW

Client Approval Required ☐ Yes ☐ No | Interface Resolution Required * ☐ Yes ☒ No

Address any "yes" answers in the description

DESCRIPTION OF CHANGE

NOTE: Components removed or deleted per this VDCN are to be removed from the actual vessel unless otherwise noted.

1. **Affected Document: 24590-QL-POD-MVA0-00001-03-04 (see Attachment 1, page 1 of this VDCN).**

   a.) Design Conditions block: Change 'Design Pressure' to 15 / -2.0

   b.) Design Conditions block: Change temperature to 230°F.

   c.) Bill of Materials block: Delete the following Line Items:

   Line item 46

   Line item 49

   Line item 54

   Line item 55

   Line item 58

   Please note that source, special nuclear, and byproduct materials, as defined in the Atomic Energy Act of 1954 (AEA) are regulated at the U. S. Department of Energy (DOE) facilities exclusively by DOE acting pursuant to its AEA authority. DOE asserts that pursuant to AEA, it has sole and exclusive responsibility and authority to regulate source, special nuclear, and byproduct materials at DOE-owned nuclear facilities. Information contained herein on radionuclides is provided for process description purposes only.

   d.) Bill of Materials block: Add item 59 and 60 shown on Attachment 1, page 16 of this VDCN.

   e.) Estimated Weight (in LBS) block, change as follows:

   OPERATING - 512,285 lbs

   FULL WATER - 401,100 lbs

   EMPTY - 103,000 lbs

   f.) General Notes and Special Requirements: Delete Note 8 and replace with the following text:

   Fabrication tolerances for field modifications shall be per 24590-WTP-MV-M59T-00001 (Pressure Vessel Tolerances Standard Details) and PFI Standard ES-24 (Pipe Bending Methods, Tolerances, Process and Material Requirement). For tolerances not specified by these standards, the following shall apply, unless otherwise noted:

Dimension	Tolerance
Linear < 12 inch	± 1/8 inch
Linear ≥ 12 inch	± 1/4 inch
Angular	± 2 degrees

   g.) RT per ASME Section VIII Div. 1 Appendix 4: Item 3, delete second sentence "This does not include internal pipe supports and braces".

JOB NO.	TITLE FOR CHANGE NOTICE
24590	UFP-VSL-00062B Redesign

DESCRIPTION OF CHANGE

h.) Connection Schedule block: Change the 'NECK THK' to SCH 160 for the following nozzles:

N07

N10

N36

i.) Connection Schedule block: Change the 'NECK MATERIAL' to SA312 TP316/316L 0.030% MAX C for the following nozzles:

N07

N10

N36

j.) RT per ASME Section VIII Div.1 Appendix 4 block: Change Appendix 4 to read "UW-51".

k.) Under title block, delete BNI reference drawing entitled, "REF DWG 24590-PTF MV-UFP-00006 REV 0".

2. **Affected Document: 24590-QL-POD-MVA0-00001-03-05 (see Attachment 1, page 2 of this VDCN).**

a.) Vessel Elevation View:

(1.) Delete supports and associated part bubbles depicted on drawing.

(2.) Delete support dimensions depicted on drawing.

(3.) Under title block, delete BNI reference entitled, "REF DWG 24590-PTF MV-UFP-00006 REV 0".

3. **Affected Document: 24590-QL-POD-MVA0-00001-03-06 (see Attachment 1, page 3 of this VDCN).**

a.) Vessel Orientation: Delete supports as shown.

b.) Internal Pipe Brace Details: Remove items 48 and 55. NOTE: Pipe Lugs are to remain in place.

c.) Internal Pipe Brace Details: Delete detail and remove components.

d.) Under title block, delete BNI reference drawing entitled, "REF DWG 24590-PTF MV-UFP-00006 REV 0".

4. **Affected Document: 24590-QL-POD-MVA0-00001-03-42 (see Attachment 1, page 4 of this VDCN).**

a.) Elevation View: Delete Elevation View and replace with NORTH ELEVATION VIEW shown on Attachment 1, page 5 of this VDCN.

b.) Internal Vessel Support Orientation: Remove view as this will be covered in Sections B-B, C-C, D-D, E-E, F-F, and G-G shown on Attachment 1, page 5 of this VDCN.

c.) Add BILL OF MATERIALS items 12 through 55 shown on Attachment 1, page 5 of this VDCN.

d.) Add SECTION B-B shown on Attachment 1, page 6 of this VDCN.

e.) Add SECTION J-J and item 12 THERMAL EXPANSION S-BEND shown on Attachment 1, page 6 of this VDCN.

f.) Add SECTION K-K and item 14 THERMAL EXPANSION S-BEND shown on Attachment 1, page 6 of this VDCN.

g.) Add SECTION L-L and item 13 THERMAL EXPANSION S-BEND shown on Attachment 1, page 6 of this VDCN.

h.) Shown on Attachment 1, page 7 of this VDCN, add the following:

(1.) SECTION C-C

(2.) DETAIL-A

(3.) Item 21 - GUIDE RING

(4.) Item 22 - GUIDE RING

(5.) Item 29 - GUIDE RING

(6.) Construction, NOTE 1

Drawing Change Notice

CHANGE DOCUMENT NO.
24590-PTF-VDCN-MS-10-00008

JOB NO.	TITLE FOR CHANGE NOTICE
24590	UFP-VSL-00062B Redesign

DESCRIPTION OF CHANGE

i.) Construction Notes block add the following numbered notes:

NOTE 2: WHERE PLATE MATERIAL IS SPECIFIED AS ASME SA240, ASME SA479 MATERIAL MAY BE SUBSTITUTED.

j.) Add SECTION D-D shown on Attachment 1, page 8 of this VDCN.

k.) Add SECTION E-E shown on Attachment 1, page 8 of this VDCN.

l.) Add Detail C shown on Attachment 1, page 9 of this VDCN.

m.) Add SECTION F-F shown on Attachment 1, page 12 of this VDCN.

n.) Add SECTION G-G shown on Attachment 1, page 12 of this VDCN.

o.) Typo in BECHTEL DOC. No.: Change 24590-QL-POB-MVA0-00001-03-42 to read as 24590-QL-**POD**-MVA0-00001-03-42.

5. **Affected Document: 24590-QL-POD-MVA0-00001-03-32 (see Attachment 1, page 10 of this VDCN).**

a.) Instrument Assy Detail: Remove support item 49 and replace with SECTION H-H and DETAIL-E shown on Attachment 1, page 12 of this VDCN.

b.) Thermowell Assembly: Remove support item 49 and replace with SECTION M-M and DETAIL-D shown on Attachment 1, page 12 of this VDCN.

c.) Under title block, delete BNI reference drawing entitled, "REF DWG 24590-PTF MV-UFP-00006 REV 0".

6. **Affected Document: 24590-QL-POD-MVA0-00001-03-34 (see Attachment 1, page 11 of this VDCN).**

a.) Typ Lower Support For Dip Tubes: Remove support item 49 for N05 and N06 only.
NOTE: This support detail is covered on Vendor drawing 24590-QL-POD-MVA0-00001-03-32 as reflected in item 5 of this VDCN.

b.) 2" SCH 80 NOZZLE W / INT PROJECTION: Delete N07 and N10 and replace with Typical 160 SCH Detail.

c.) Under title block, delete BNI reference drawing entitled, "REF DWG 24590-PTF MV-UFP-00006 REV 0".

7. **Affected Document: 24590-QL-POD-MVA0-00001-03-43 (see Attachment 1, page 13 of this VDCN).**

a.) Typical Outer PJM Pipe Support: Delete Typical Outer PJM Pipe Support view and replace with TYPICAL OUTER PJM SUPPORT, SECTION S-S and associated views shown on Attachment 1, page 16 of this VDCN.

b.) 30" Charge Vessel & Inner PJM: Delete 30" Charge Vessel & Inner PJM view and replace with 30" CHARGE VESSEL & INNER PJM SUPPORT, SECTION P-P, item 54 DETAIL G and associated views shown on Attachment 1, page 14 of this VDCN.

c.) 36" Charge Vessel & Inner PJM Support: Delete 36" Charge Vessel & Inner PJM Support and replace with VIEW A 36" CHARGE VESSEL & INNER PJM SUPPORT, SECTION N-N, item 35 DETAIL F, and associated views shown on Attachment 1, page 14 of this VDCN.

d.) Typo in BECHTEL DOC. No.: Change 24590-QL-POB-MVA0-00001-03-43 to read as 24590-QL-**POD**-MVA0-00001-03-43.

8. **Affected Document: 24590-QL-POD-MVA0-00001-03-30 (see Attachment 1, page 15 of this VDCN).**

a.) 36" CV Delivery RFD Pump Detail: Remove support item 46 from TYP SUPPORT DETAIL and reference to SEE TYP SUPPORT DETAIL including dimension.

b.) 30" CV Delivery RFD Pump Detail: Remove support item 46 from TYP SUPPORT DETAIL and reference to SEE TYP SUPPORT DETAIL including dimension.

c.) Sampler RFD Pump Detail:

(1.) Remove support item 58 from TYP SUPPORT DETAIL.

(2.) Add DETAIL J, SECTION R-R, and SAMPLER PUMP RFD DETAIL shown on Attachment 1, page 16 of this VDCN.

(3.) Delete Sampler detail and replace with SAMPLER PUMP RFD ASSEMBLY and DETAIL H shown on Attachment 1, page 16 of this VDCN.

d.) Under title block, delete BNI reference drawing entitled, "REF DWG 24590-PTF MV-UFP-00006 REV 0".

Drawing Change Notice

CHANGE DOCUMENT NO.
24590-PTF-VDCN-MS-10-00008

JOB NO.	TITLE FOR CHANGE NOTICE
24590	UFP-VSL-00062B Redesign

DESCRIPTION OF CHANGE

9. **Affected Document: 24590-QL-POD-MVA0-00001-03-33 (see Attachment 1, page 17 of this VDCN).**
   a.) 2"SCH 80 INLET TO INTERNALS: Delete N36 and replace with Typical SCH 160 Nozzle Detail (REF Section Q-Q).
   b.) Under title block, delete BNI reference drawing entitled, "REF DWG 24590-PTF MV-UFP-00006 REV 0".

10. **Affected Document: 24590-QL-POD-MVA0-00001-03-31 (see Attachment 1, page 18 of this VDCN).**
   a.) WASH RING TEE: Delete N36 and add Section Q-Q which depicts N36 details show on Attachment 1, page 6 of this VDCN.
   b.) Under title block, delete BNI reference drawing entitled, "REF DWG 24590-PTF MV-UFP-00006 REV 0".

ORIGINATOR	CHECKER
M. Mudry	L. Rodgers

Reviews

CON - K. Keck R ZIELINSKI for K Keck per CCN 227735 R Zielinski	E&NS - J. Hinckley	CS&A - ~~S. Gemain~~	MET - J. Disney
MS&PE - D. Vo	PD - J. McGrath	PE&T - J. Olson	

Approval(s)

PEQ - J. Julyk			

Date *(inserted by final approver)*: 1/5/11

CHANGE N07, N10 AND N36 MATERIAL TO SA312 TP316/316L 0.030% MAX C, BY RPP-WTP

CHANGE N07, N10, AND N36 TO SCH 160, BY RPP-WTP

DELETE AND REPLACE BY RPP-WTP

DESIGN CONDITIONS

SPECIFICATIONS	PARENT VESSEL
DESIGN PRESSURE	~~15/-10.29 psig~~ 15/-2.0 BY RPP-WTP
HYDRO-TEST PRESSURE	19.5 psig + 15.5 psig S.H.
DESIGN TEMPERATURE	~~120°F~~ 230°F BY RPP-WTP
MDMT	40° F.
CODE	ASME SECTION VIII, DIVISION I, 2001 EDITION, 2001 ADDENDUM
CODE STAMP (National Board No.)	REQUIRED
NON-DESTRUCTIVE TESTING	VT, UT, PT, RT, HELIUM TESTING, AND HYDROSTATIC TESTING PER ASME SECT. VIII, DIV. I
RADIOGRAPH (5)	PER PARA. 6.5.5 OF SPECIFICATION 24590-WTP-3PN-MV00-00006
JOINT EFFICIENCY	PER UW-12
CORROSION ALLOWANCE	0.04"
INSPECTION OPENING	REQUIRED PER UG-46(a)
IMPACT TESTING	NOT REQUIRED PER UHA-51(d)
POSTWELD HEAT TREATING	NOT REQUIRED PER UHA-32
MATERIAL: BOLTS/STUDS/NUTS	NOT APPLICABLE
MATERIAL: GASKETS	NOT APPLICABLE
INSULATION	NOT REQUIRED
WIND DESIGN	NOT REQUIRED
SNOW DESIGN	NOT REQUIRED
SEISMIC DESIGN	SC-I PER 24590-WTP-3PS-MV00-T0002 & 24590-WTP-3PS-SS90-T0001
BECHTEL QUALITY LEVEL	QL-I

(1) (1A) (2) (3) BILL OF MATERIALS

MK	THK/SIZE	MATERIAL	HEAT NO.	DESCRIPTION	QTY
1	3/8"	SA-240-316 w/ 0.030% max. C		SHELL	1
2	5/8" NOM.	SA-240-316 w/ 0.030% max. C		TOP HEAD - 180" I.D. 2:1 SE w/ 2" S.F. (3/8" MIN. AFTER FORMING)	1
3	5/8" NOM.	SA-240-316 w/ 0.030% max. C		BOTTOM HEAD - 180" I.D. 2:1 SE w/ 2" S.F. (3/8" MIN. AFTER FORMING)	1
4					
5	3/8"	SA-240-304 w/ 0.030% max. C		SUPPORT SKIRT	1
6	1½"	SA-240-304 w/ 0.030% max. C		SUPPORT RING BEAM TOP	1
7	1"	SA-240-304 w/ 0.030% max. C		SUPPORT RING BEAM SHELL	1
8	1½"	A-572-Gr50		SUPPORT RING BEAM BOTTOM	1
9					
10	1"	SA-240-304 w/ 0.030% max. C		TAILING LUG BACKING PLATE - 20" x 20"	1
11	2"	SA-240-304 w/ 0.030% max. C		TAILING LUG	1
12	1"	SA-240-304 w/ 0.030% max. C		TAILING LUG GUSSET	1
13	—	——		DELETED	-
14					
15					
16					
17	½"	SA-240-316 w/ 0.030% max. C		LIFTING TRUNNION REPAD - 22" O.D.	2
18	½"	SA-240-304 w/ 0.030% max. C		LIFTING TRUNNION BARREL - 16" O.D. x 4" LONG	2
19	½"	SA-240-304 w/ 0.030% max. C		LIFTING TRUNNION KEEPER PLATE - 24" O.D.	2
20					
21	½"	SA-240-316 w/ 0.030% max. C		INSTRUMENT ASSEMBLY COVER PLATE	1
22	¼" x 1"	SA-240-316 w/ 0.030% max. C		INSTRUMENT ASSEMBLY SPACERS	23
23	2" SCH 160	SMLS. SA-312-TP316 w/ 0.030% max. C		BUBBLER SHELL	2
24	2" x 1"	SMLS. SA-312-TP316 w/ 0.030% max. C		BUBBLER REDUCER - 2 x 1, SCH 160	2
25	5/8" NOM.	SA-182-F316 w/ 0.030% max. C		MANWAY HEAD, 24" OD, ASME F&D w/ 1½" S.F.	1
26					
27					
28					
29					
30	1½"ø	SA-182-F316 w/ 0.030% max. C		THERMOWELL POCKET (MACHINE PER DETAIL)	1
31	1" SCH 160	SMLS. SA-312-TP316 w/ 0.030% max. C		THERMOWELL DIP TUBE	2
32	2" SCH 40	SMLS. SA-312-TP316 w/ 0.030% max. C		WASH RING PIPE	1
33	3/16"	SA-240-316 w/ 0.030% max. C		WASH RING END CAP PLATE	6
34	3/16" x 2"	SA-240-316 w/ 0.030% max. C		WASH RING SUPPORTS	6
35	2" SCH 40	SMLS. SA-403-WP316S w/ 0.030% max. C		WASH RING TEE - 2" SCH 40 STRAIGHT TEE	3
36					
37	3/16"	SA-240-316 w/ 0.030% max. C		NAMEPLATE BRACKET (14" x 14" 'U' w/ 2" LEGS) (4)	1
38					
39	MISC.	SA-240-316 w/ 0.030% max. C		PULSE JET MIXER (B) - SEE DWG. 3006A FOR DETAILS	6
40	MISC.	SA-240-316 w/ 0.030% max. C		CHARGE VESSEL (36") - SEE DWG. 3006B FOR DETAILS	3
41	---	------		DELETED	-
42	MISC.	SA-240-316 w/ 0.030% max. C		CHARGE VESSEL (30") - SEE DWG. 3006D FOR DETAILS	2
43	½"	SA-240-304 w/ 0.030% max. C		~~SKIRT ACCESS (24" ø)~~	2
44	MISC.	SA-240-316 w/ 0.030% max. C		~~CHARGE VESSEL (18") - SEE DWG. 3006E FOR DETAILS~~	1
45	4" SCH 40	SA-312-TP316 w/ 0.030% max. C		SKIRT VENT (4½")	4
46	~~½" SCH 160~~	~~SA-312-TP316 w/ 0.030% max. C~~		~~INTERNAL PIPING SUPPORT~~	~~10~~
47	STD.	SA-403-316 w/ 0.030% max. C		2" SCH 80 CAP	1
48	¼" X 3" X 3"	SA-479-316 w/ 0.030% max. C		INTERNAL PIPING SUPPORT ANGLE	4
49	~~[illegible]~~	~~SA-240-316 w/ 0.030% max. C~~		~~INTERNAL PIPING LOWER SUPPORT~~	~~[illegible]~~
50	6" SCH 80	SA-312-TP316 w/ 0.030% max. C		CONNECTING PIPE, LENGTH A/R	5
51	1"	SA-240-316 w/ 0.030% max. C		INSERT PLATE (15" OD)	1
52	Sch 160	SA-403WPS-316 w/ 0.030% max. C		4" x 3" ECC. REDUCER - ENDS MACHINED TO SCH 80	2
53	4" SCH 80	SA-312-TP316 w/ 0.030% max. C		CONNECTING PIPE, LENGTH A/R	5
54	~~[illegible]~~	~~[illegible]~~		~~4" x 3" ECCENTRIC REDUCER~~	~~[illegible]~~
55	~~[illegible]~~	~~SA-479-316 w/ 0.030% max. C~~		~~INTERNAL PIPING SUPPORT FORMED U-BOLT FOR 1" PIPE~~	~~6~~
56	1" SCH 160	SA-312-TP316 w/ 0.030% max. C		CONNECTING PIPE, LENGTH A/R	1
57	1" SCH 160	SA-312-TP316 w/ 0.030% max. C		CONNECTING PIPE, LENGTH A/R	1
58	~~½" SCH 160~~	~~SA-312-TP316 w/ 0.030% max. C~~		~~INTERNAL PIPING SUPPORT~~	~~[illegible]~~

(3) DELETE LINE ITEMS 46, 49, 54, 55, 58 BY RPP-WTP. NOTE ITEM 49 IS DELETED AS REQUIRED.
ADD ITEM 59, BY RPP-WTP
ADD ITEM 60, BY RPP-WTP

(2) (1) (1A) CONNECTION SCHEDULE

MK	SIZE	NECK MATERIAL	NECK THK	HEAT NO.	DESCRIPTION	ELEV. "Z"	"X"	RADIUS FROM CENTER	TYPE	CONN. THK
N05	2" OD	MACHINED SA-182-F316 w/ 0.030% max. C	SPCL		TEMPERATURE	(4) 307⅞"	52⅞"	30"	STUB	¾" SCH 10
N06	6" NPS	SEAMLESS SA-312-TP316 w/ 0.030% max. C	SCH 80		INSTRUMENTATION	304"	54"	30"	STUB	NA
N06A	1" NPS	SEAMLESS SA-312-TP316 w/ 0.030% max. C	SCH 160		BALANCE	314"	54"	30"	STUB	1" SCH 40
N06B	1" NPS	SEAMLESS SA-312-TP316 w/ 0.030% max. C	SCH 160		DENSITY	315"	60"	30"	STUB	1" SCH 40
N06C	1" NPS	SEAMLESS SA-312-TP316 w/ 0.030% max. C	SCH 160		LEVEL	316"	61"	30"	STUB	1" SCH 40
N07	2" NPS	~~SEAMLESS SA-312-TP316 w/ 0.030% max. C~~	~~SCH 80~~ SCH 160		INLET	248"	43"	60"	STUB	2" SCH 40
N09	2" NPS	SEAMLESS SA-312-TP316 w/ 0.030% max. C	SCH 80		INLET	307"	52"	30"	STUB	2" SCH 40
N10	2" NPS	~~SEAMLESS SA-312-TP316 w/ 0.030% max. C~~	~~SCH 80~~ SCH 160		INLET	305"	50"	54"	STUB	2" SCH 40
N11	2" NPS	SEAMLESS SA-312-TP316 w/ 0.030% max. C	SCH 80		INLET/AIR PURGE	303"	48"	45"	STUB	2" SCH 40
N12	2" OD	MACHINED SA-182-F316 w/ 0.030% max. C	SPCL		AIR/VAC TO UFP-VSL-00037	241"	36"	72"	STUB	1" SCH 40
N13	2" OD	MACHINED SA-182-F316 w/ 0.030% max. C	SPCL		OUTLET/SAMPLE (UFP-RFD-00034)	307"	52"	30"	STUB	1" SCH 40
N14	2" NPS	SEAMLESS SA-312-TP316 w/ 0.030% max. C	SCH 80		SAMPLE RETURN	305"	50"	54"	STUB	2" SCH 40
N16	2" NPS	SEAMLESS SA-312-TP316 w/ 0.030% max. C	SCH 160		AIR/VAC TO UFP-PJM-00039	248"	43"	60"	STUB	2" SCH 40
N17	2" NPS	SEAMLESS SA-312-TP316 w/ 0.030% max. C	SCH 160		OUTLET TO EJECTOR	NA	NA	NA	STUB	2" SCH 40
N18	2" NPS	SEAMLESS SA-312-TP316 w/ 0.030% max. C	SCH 160		AIR/VAC TO UFP-PJM-00040	303"	48"	45"	STUB	2" SCH 40
N19	2" NPS	SEAMLESS SA-312-TP316 w/ 0.030% max. C	SCH 160		AIR/VAC TO UFP-PJM-00041	248"	45"	60"	STUB	2" SCH 40
N20	2" NPS	SEAMLESS SA-312-TP316 w/ 0.030% max. C	SCH 160		AIR/VAC TO UFP-PJM-00042	303"	48"	45"	STUB	2" SCH 40
N21	2" NPS	SEAMLESS SA-312-TP316 w/ 0.030% max. C	SCH 160		AIR/VAC TO PND-PJM-00043	(4) 247½"	42⅛"	60"	STUB	2" SCH 40
N22	6" NPS	SEAMLESS SA-312-TP316 w/ 0.030% max. C	SCH 80		OUTLET/VESSEL VENT	(4) 304⅝"	54⅞"	CENTER	STUB	6" SCH 10
N23	3" NPS	SEAMLESS SA-312-TP316 w/ 0.030% max. C	SCH 80		AIR/VAC TO UFP-VSL-00035	241"	36"	72"	STUB	3" SCH 40
N24	3" NPS	SEAMLESS SA-312-TP316 w/ 0.030% max. C	SCH 80		AIR/VAC TO UFP-VSL-00036	(4) 240⅝"	35⅝"	72"	STUB	3" SCH 40
N25	3" NPS	SEAMLESS SA-312-TP316 w/ 0.030% max. C	SCH 80		AIR/VAC TO UFP-VSL-00075	(4) 292⅞"	57⅞"	64"	STUB	3" SCH 40
N26	3" NPS	SEAMLESS SA-312-TP316 w/ 0.030% max. C	SCH 80		AIR/VAC TO UFP-VSL-00051	293"	58"	64"	STUB	3" SCH 40
N28	4" NPS	SEAMLESS SA-312-TP316 w/ 0.030% max. C	SCH 80		OUTLET FROM UFP-RFD-00033	304"	54"	12"	STUB	4" SCH 40
N29	4" NPS	SEAMLESS SA-312-TP316 w/ 0.030% max. C	SCH 80		OUTLET FROM UFP-RFD-00034	(4) 308⅝"	53⅝"	12"	STUB	4" SCH 40
N30	4" NPS	SEAMLESS SA-312-TP316 w/ 0.030% max. C	SCH 80		OUTLET FROM UFP-RFD-00032	308"	53"	16"	STUB	4" SCH 40
N32	4" NPS	SEAMLESS SA-312-TP316 w/ 0.030% max. C	SCH 80		OUTLET FROM UFP-RFD-00031	308"	58"	16"	STUB	4" SCH 40
N34	2" NPS	SEAMLESS SA-312-TP316 w/ 0.030% max. C	SCH 80		INLET TO WASH RING	(4) 292⅛"	57⅛"	70"	STUB	2" SCH 40
N35	2" NPS	SEAMLESS SA-312-TP316 w/ 0.030% max. C	SCH 80		INLET TO WASH RING	293"	58"	70"	STUB	2" SCH 40
N36	2" NPS	~~SEAMLESS SA-312-TP316 w/ 0.030% max. C~~	~~SCH 80~~ SCH 160		INLET TO WASH RING	293"	58"	70"	STUB	2" SCH 40
N37	6" NPS	SEAMLESS SA-312-TP316 w/ 0.030% max. C	SCH 80		OUTLET/OVERFLOW	NA	NA	NA	STUB	6" SCH 10
N38	2" NPS	SEAMLESS SA-312-TP316 w/ 0.030% max. C	SCH 80		SPARE	(4) 307½"	52½"	16"	STUB	CAPPED
N39	24" OD	WELDED SA-240-316 w/ 0.030% max C	½"		MANWAY (TACKED CAP)	300"	45"	60"	STUB	CAPPED
N40	3" NPS	SEAMLESS SA-312-TP316 w/ 0.030% max. C	SCH 80		INLET	307"	52"	30"	STUB	3" SCH 40
N41	2" NPS	SEAMLESS SA-312-TP316 w/ 0.030% max. C	SCH 160		AIR/VAC TO UFP-PJM-00051	303"	48"	45"	STUB	2" SCH 40
N44	4" NPS	SEAMLESS SA-312-TP316 w/ 0.030% max. C	SCH 80		OUTLET FROM UFP-RFD-00047	304"	54"	12"	STUB	4" SCH 40
N45	3" NPS	SEAMLESS SA-312-TP316 w/ 0.030% max. C	SCH 80		AIR/VAC TO UFP-VSL-00089	293"	58"	64"	STUB	3" SCH 40
N46	2" NPS	SEAMLESS SA-312-TP316 w/ 0.030% max. C	SCH 80		FORCED AIR PURGE	303"	50"	34"	STUB	2" SCH 40

GENERAL NOTES and SPECIAL REQUIREMENTS

1. NWC Quality Assurance Manual ASME NQA-1 applies in its entirety for this project.
2. All material, including weld wire, for this project shall be purchased from approved Level 3 & 4 suppliers.
3. All 316SS material, including weld wire, shall be PMI tested and approved prior to use.
4. No deviations from this drawing is allowed without Bechtel approval.
5. The base of the vessel support skirt and ring beam shall be marked after shop assembly, using a line of welding bead, at the 0° Orientation as shown on the drawing. Skirt base to be suitably reinforced prior to shipment.
6. A datum line shall be marked on the heads with low stress stamping 2" away from the head/shell seam.
7. Contact materials shall be approved prior to use. This is to include marking material, lubricants, tape, anti-spatter spray, harmful metals or salts such as zinc, lead, or copper, etc. Total halogens in the contact materials shall be less than 200 ppm.
8. Fabrication tolerance shall be in accordance with Bechtel drawing Pressure Vessel Tolerances Standard Details DWG. # 24590-WTP-MV-M59T-00001.
9. Plate 3/8" and over in thickness shall not be sheared to size. All lubricants, burrs, and debris shall be removed after cutting.
10. Internal piping bends shall have a center line radius of four times the pipe nominal diameter. A pipe shall not be terminated or butt-welded within 4" of the bend.
11. Longitudinal seams shall be completed and have successfully passed any NDE prior to welding any adjoining circumferential seams.
12. Manway cover head shall be prepared for field welding, tacked into place with 4 @ ½" long tacks 90° apart, sealed to prevent dirt and water entry, and marked with the item number.
13. Nozzles shall be prepared for field welding, shall be covered with a hard rubber or plastic cap, and shall be sealed to prevent dirt or water entry.
14. All attachments e.g. lugs, brackets, nozzles and other members shall follow the contour of the surface to which they will be attached. The gap at the exposed edges shall not exceed 1/16" prior to welding.
15. All attachments that use only fillet welds shall have a maximum gap of 1/8" between the components being joined.
16. All temporary attachments shall be 316 stainless steel.
17. All temporary attachments shall be removed prior to hydrostatic test.
18. PMI to be performed on all pressure retaining items including welds after fabrication.

UT per ASME Section VIII Div. 1 Appendix 12 (4)

1. The shell and head sections under the lifting lugs, tailing lugs, and internal vessel supports shall be ultrasonically examined over 100% of the area that extends 5" beyond each side of the perimeter of the proposed fillet weld attachment to the shell or head.
2. All welds attaching internal or external components to the shell or heads shall be ultrasonically examined. This examination does not include nozzle to vessel wall welds.
3. All shell and head sections for 3" around nozzle penetrations shall be ultrasonically examined prior to welding.
4. All nozzle welds to the shell or head with internal projection shall be ultrasonically examined.

PT per ASME Section VIII Div. 1 Appendix 8 (1A) (3) (4)

1. All welds over 3/4" in 304 & 316 series Stainless Steel shall be dye penetrant examined.

RT per ASME Section VIII Div. 1 ~~Appendix 4~~ (1A) (3) (4)

CHANGE TO UW-51 BY RPP-WTP

1. All butt welds in the shell shall be 100% radiographically examined.
2. All nozzle welds to the shell or head without internal projection shall be radiographically examined.
3. Butt welds in internal piping shall be radiographically examined. This does not include internal pipe supports and braces.
4. All butt welds in the nozzle necks shall be radiographically examined.
5. All thermowell socket welds shall be radiographically examined.

OPERATING: 512,285 lbs
FULL WATER: 401,100 lbs
EMPTY: 103,000 lbs
BY RPP-WTP

Helium Leak Test

1. All thermowell socket welds shall be helium leak tested.

NAMEPLATE: (B) 4021 CERTIFIED BY NORTHWEST COPPER WORKS, INC. PORTLAND, OREGON 97227; 15/-10.29 PSI AT 120°F MAXIMUM ALLOWABLE WORKING PRESSURE; 40°F AT 15/-10.29 PSI MINIMUM DESIGN METAL TEMPERATURE; 3006 SERIAL NUMBER; 2004 YEAR BUILT; JOB No.: 24590; CONTRACT No.: DE-AC27-01RV14136; PLANT ITEM NO.: UFP-VSL-00062B; FABRICATION SPEC: 24590-WTP-3PS-MV00-T0001; DESIGN PRESSURE: 15 PSIG; EXTERNAL PRESSURE: 10.29 PSIG; HYDROTEST PRESSURE: 19.5 PSIG AT TOP; DESIGN TEMPERATURE: 120 °F; MIN. DESIGN METAL TEMP: 40 °F; MATERIAL OF CONSTRUCTION: 316SS w/ 0.030% max. C; ERECTED WEIGHT: 100,000 LBS.

Bechtel National, Inc. SUPPLIER DOCUMENT STATUS — 24590-PTF-MV-UFP-VSL-00062B, Job No. 24590
1. [X] Work may proceed.
2. [ ] Revise and resubmit. Work may proceed subject to resolution of indicated comments.
3. [ ] Revise and resubmit. Work may not proceed.
4. [ ] Review not required. Work may proceed.
Permission to proceed does not constitute acceptance or approval of design details, calculations, analyses, test methods, or materials developed or selected by the supplier and does not relieve supplier from full compliance with contractual obligations.
REVIEWED: M / HK
G-321 Document Category: 1.1
Accepted by: H. KHURANA, 01/13/05

REVISIONS

NO	DESCRIPTION	REV BY	APD BY	DATE
5	UPDATED RADIOGRAPH SPEC REFERENCE	SMT	MJV	11/05/04
4	REVISED PER CUSTOMER COMMENTS AND ENGINEERING CHANGES	SMT	MJV	11/05/04
3	REVISED PER CUSTOMER COMMENTS AND ENGINEERING CHANGES	SMT	MJV	06/07/04
2	REVISED PER CUSTOMER COMMENTS AND ENGINEERING CHANGES	MDH	MJV	09/03/03
1A	REVISED PER CUSTOMER COMMENTS AND ENGINEERING CHANGES	MDH	MJV	07/18/03
1	REVISED PER CUSTOMER COMMENTS & ENGINEERING CHANGES	MJV	MDH	04/28/03

ESTIMATED WEIGHT: (IN LBS) OPERATING - ~~[illegible]~~ FULL WATER - ~~[illegible]~~ EMPTY - ~~[illegible]~~

NORTHWEST COPPER WORKS, INC.
1303 N. RIVER STREET • PORTLAND, OREGON • 97227

180" I.D. ULTRAFILTER PERMEATE COLLECTION VESSEL

BECHTEL NATIONAL INC. 3000 George Washington Way Richland, Washington 99352		EQUIP. NO. UFP-VSL-00062B	
		P.O. NO. 24590-QL-POD-MVA0-00001 REV 0	
SCALE AS NOTED	JOB NO. 3006	DWG. NO. D- 3006	REV 5
DATE 01/17/03	CHKD. BY KRT		
DWN. BY MDH	APPD. BY MDH	SHT. NO. 1 OF 8	

BECHTEL NATIONAL INC. FOR D.O.E.
RIVER PROTECTION PROJECT IN RICHLAND, WA. ~~REF. DWG 24590-PTF-MV-UFP-00006 REV 0~~ BECHTEL DOC. 24590-QL-POD-MVA0-00001-03-04 REV. 00F
DELETED BY RPP-WTP

P:\Swap\ACAD\03\D3006-5 Mon Dec 06 09:43:59 2004

Some information on page this may appear to be illegible, however, the information necessary is legible.

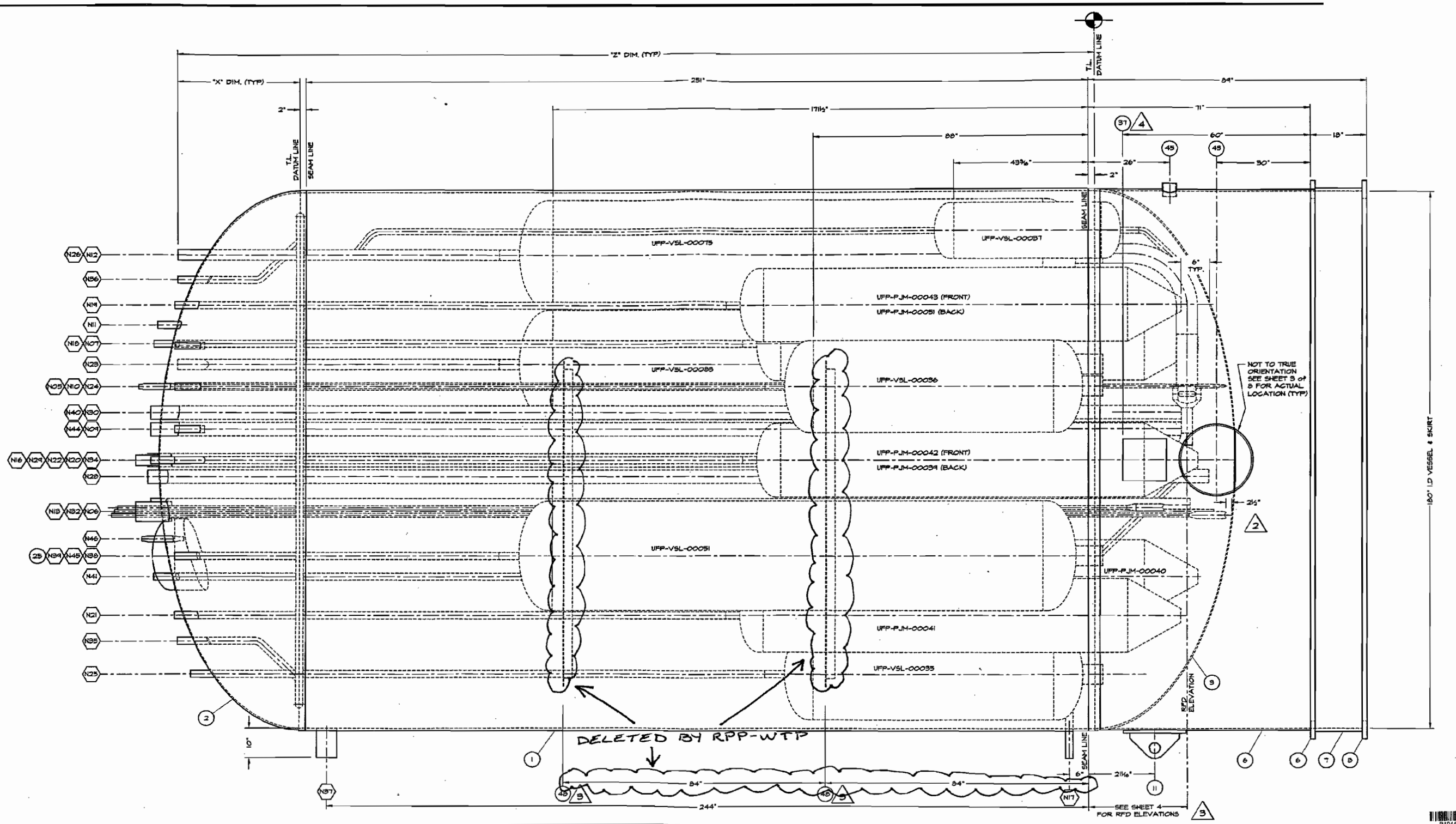

2 1A VESSEL ELEVATION
SCALE: ¾" = 1'-0"

Some information on page this may appear to be illegible, however, the information necessary is legible.

24590-PTF-MV-UFP-VSL-00062B
Job No. 24590
Bechtel National, Inc.
SUPPLIER DOCUMENT STATUS
1. Work may proceed.
2. Revise and resubmit. Work may proceed subject to resolution of indicated comments.
3. Revise and resubmit. Work may not proceed.
4. Review not required. Work may proceed.
Permission to proceed does not constitute acceptance or approval of design details, calculations, analyses, test methods, or materials developed or selected by the supplier and does not relieve supplier from full compliance with contractual obligations.
REVIEWED JA FK
G-321 Document Category 1.1
(From Supplement A to G-321-E (E) or G-321-V (V), as applicable, or "N/A" if SSRS is used)
Supersedes RNI Document No. (When applicable) Rev.
Accepted by H. KHURANA Date Rev. 01/13/05
Released by (When applicable) Date

REVISIONS

NO	DESCRIPTION	REV BY	APD BY	DATE
5	NO CHANGES	SMT	MJV	12/06/04
4	ADDED NAMEPLATE ELEVATION	SMT	MJV	11/05/04
3	REVISED PER CUSTOMER COMMENTS AND ENGINEERING CHANGES	SMT	MJV	06/07/04
2	REVISED PER CUSTOMER COMMENTS AND ENGINEERING CHANGES	MDH	MJV	09/03/03
1A	REVISED PER CUSTOMER COMMENTS AND ENGINEERING CHANGES	MDH	MJV	07/18/03
1	REVISED PER CUSTOMER COMMENTS & ENGINEERING CHANGES	MJV	MDH	04/28/03

NORTHWEST COPPER WORKS, INC.
1303 N. RIVER STREET • PORTLAND, OREGON • 97227

180" I.D. ULTRAFILTER
PERMEATE COLLECTION VESSEL ELEVATION

BECHTEL NATIONAL INC.
3000 George Washington Way
Richland, Washington 99352

EQUIP. NO. UFP-VSL-00062B
P.O. NO. 24590-QL-POD-MVAO-00001 REV 0
SCALE ¾" = 1'-0"
JOB NO. 3006
DWG. NO. D- 3006
REV 5
DATE 01/17/03
CHKD. BY KRT
DWN. BY MDH
APPD. BY MDH
SHT. NO. 2 OF 8

~~REF. DWG 24590-PTF-MV-UFP-00006 REV 0~~
BECHTEL DOC. 24590-QL-POD-MVAO-00001-03-05 REV. 00 EF
DELETED, BY RPP-WTP

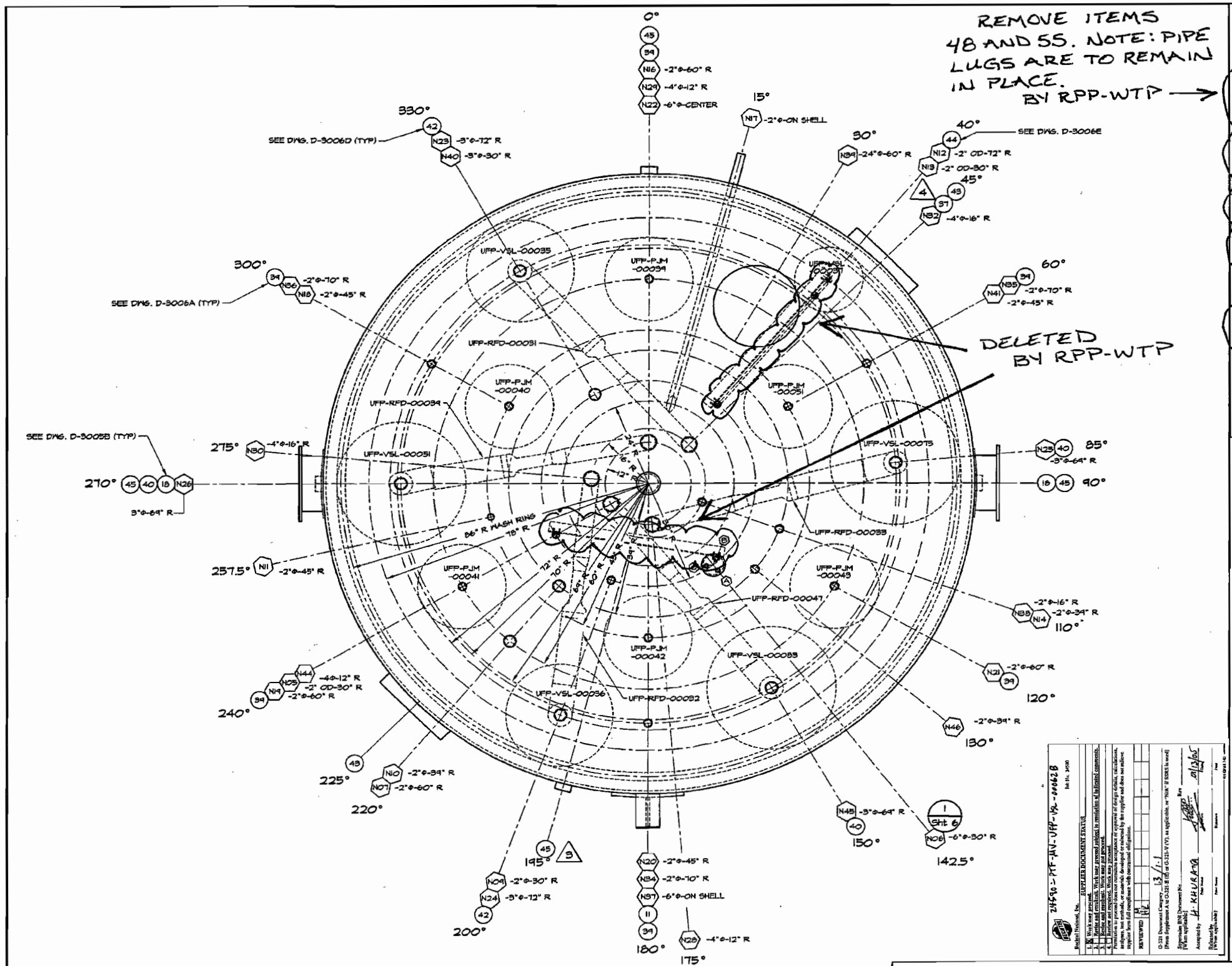

REMOVE ITEMS 48 AND 55. NOTE: PIPE LUGS ARE TO REMAIN IN PLACE. BY RPP-WTP →

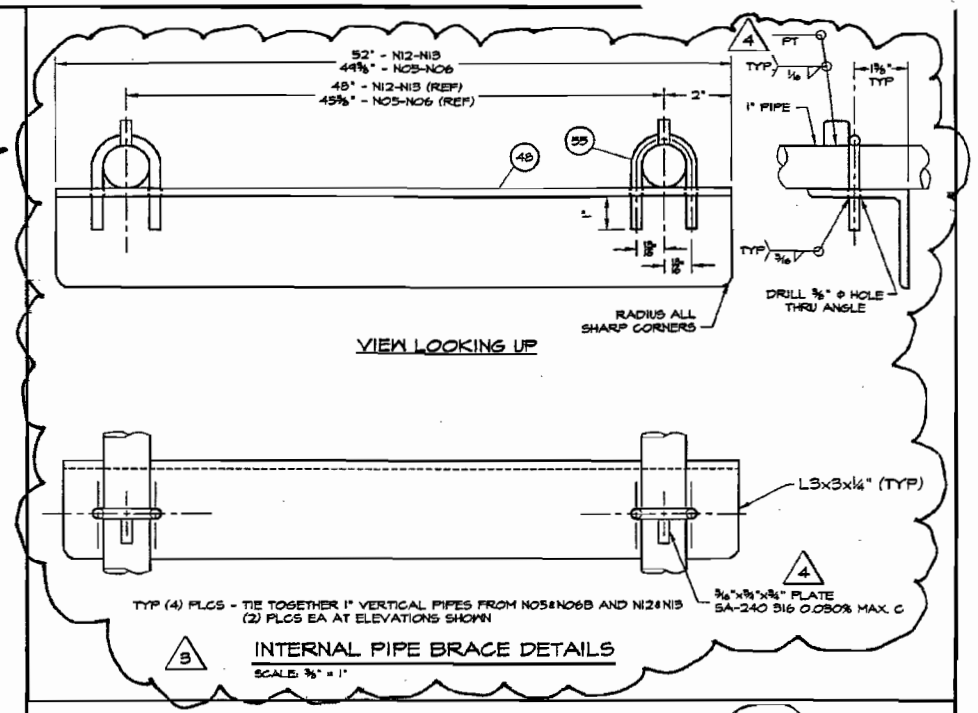

3 INTERNAL PIPE BRACE DETAILS
SCALE: ⅜" = 1"

DELETE AND REMOVE COMPONENTS BY RPP-WTP

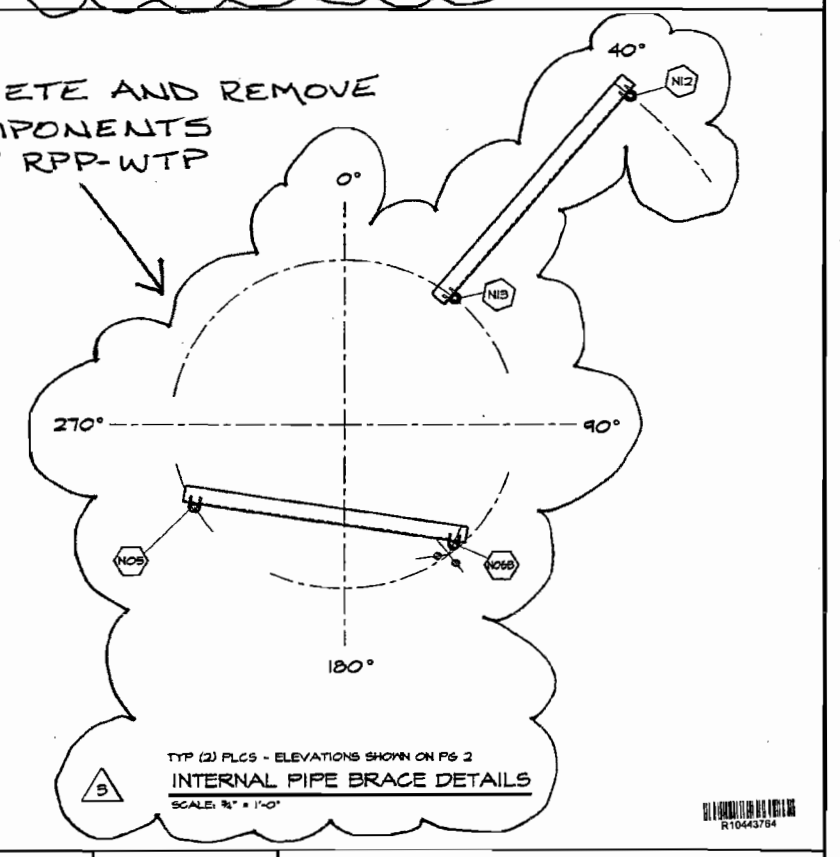

TYP (2) PLCS - ELEVATIONS SHOWN ON P6 2

5 INTERNAL PIPE BRACE DETAILS
SCALE: ⅜" = 1'-0"

4 2 1A VESSEL ORIENTATION
SCALE: ⅜" = 1'-0"

REVISIONS				
NO	DESCRIPTION	REV BY	APP'D BY	DATE
5	NO CHANGES	SHT	M.J.V	12/08/04
4	REVISED PER CUSTOMER COMMENTS AND ENGINEERING CHANGES	SHT	M.J.V	11/05/04
3	REVISED PER CUSTOMER COMMENTS AND ENGINEERING CHANGES	SHT	M.J.V	08/07/04
2	REVISED PER CUSTOMER COMMENTS AND ENGINEERING CHANGES	MDH	M.J.V	04/23/03
1A	REVISED PER CUSTOMER COMMENTS AND ENGINEERING CHANGES	MDH	M.J.V	07/18/03
1	REVISED PER CUSTOMER COMMENTS & ENGINEERING CHANGES	M.J.V	MDH	04/25/03

NORTHWEST COPPER WORKS, INC.
1303 N. RIVER STREET • PORTLAND, OREGON • 97227

180" I.D. ULTRAFILTER PERMEATE COLLECTION VESSEL PLAN

BECHTEL NATIONAL INC. 3000 George Washington Way Richland, Washington 99352		EQUIP. NO.	UFP-VSL-00062B
		P.O. NO.	24590-GL-POD-MVA0-00003 REV 0
SCALE ⅜" = 1'-0"	JOB NO. 3006	DWG. NO.	D- 3006
DATE 01/17/03	CHKD. BY KRT	REV	5
DWN. BY MDH	APP'D. BY MDH	SHT. NO.	3 OF 8

DELETED BY RPP-WTP

REF: DWG 24590-PTF-MV-UFP-00006 REV 00
BECHTEL DOC. 24590-GL-POD-MVA0-00001-03-06 REV. 00& F

R10443784

Some information on page this may appear to be illegible, however, the information necessary is legible.

P:\Swep\ACAD\03\D3006-5 Mon Dec 06 09:43:38 2004

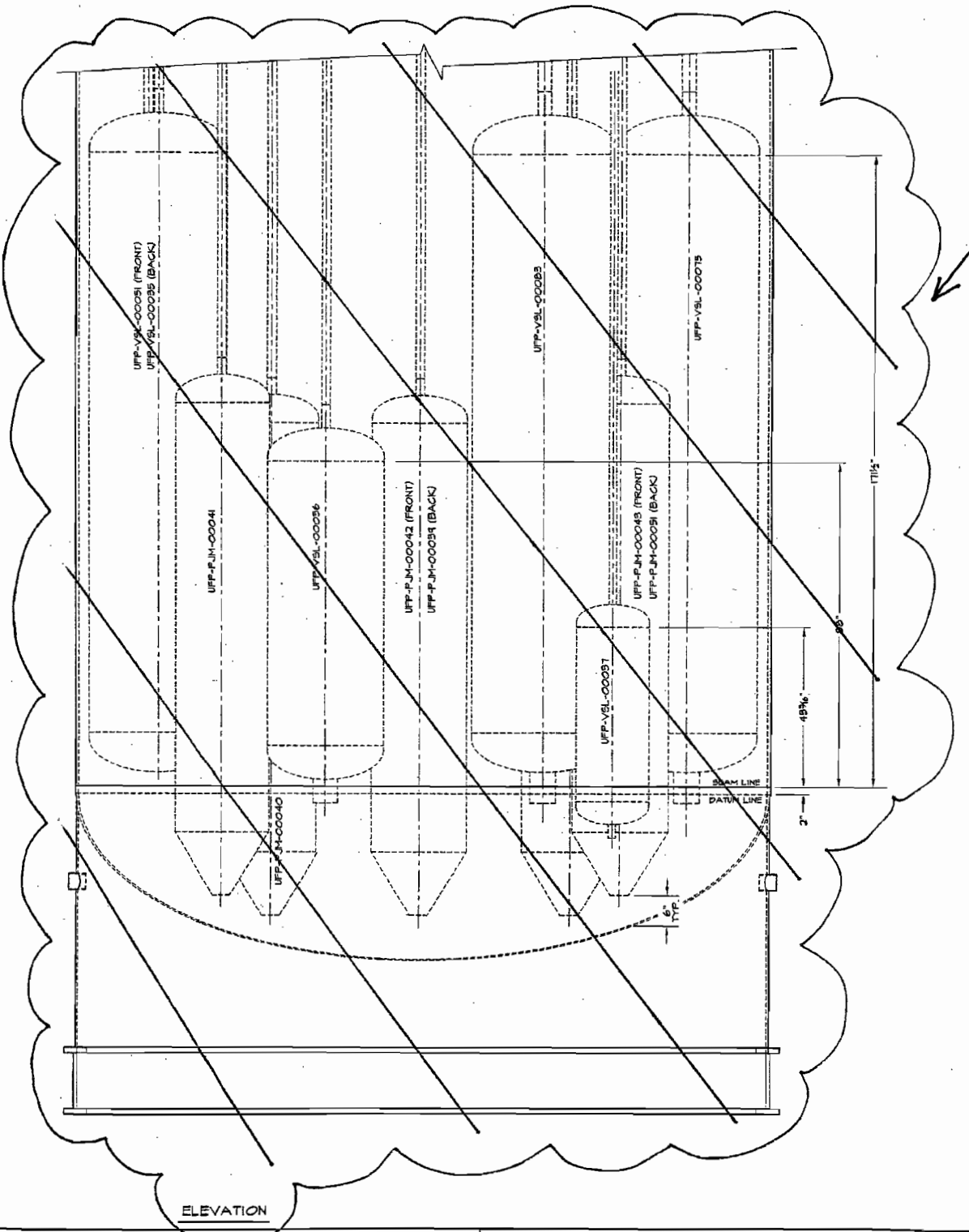

ELEVATION

DELETED BY RPP-WTP

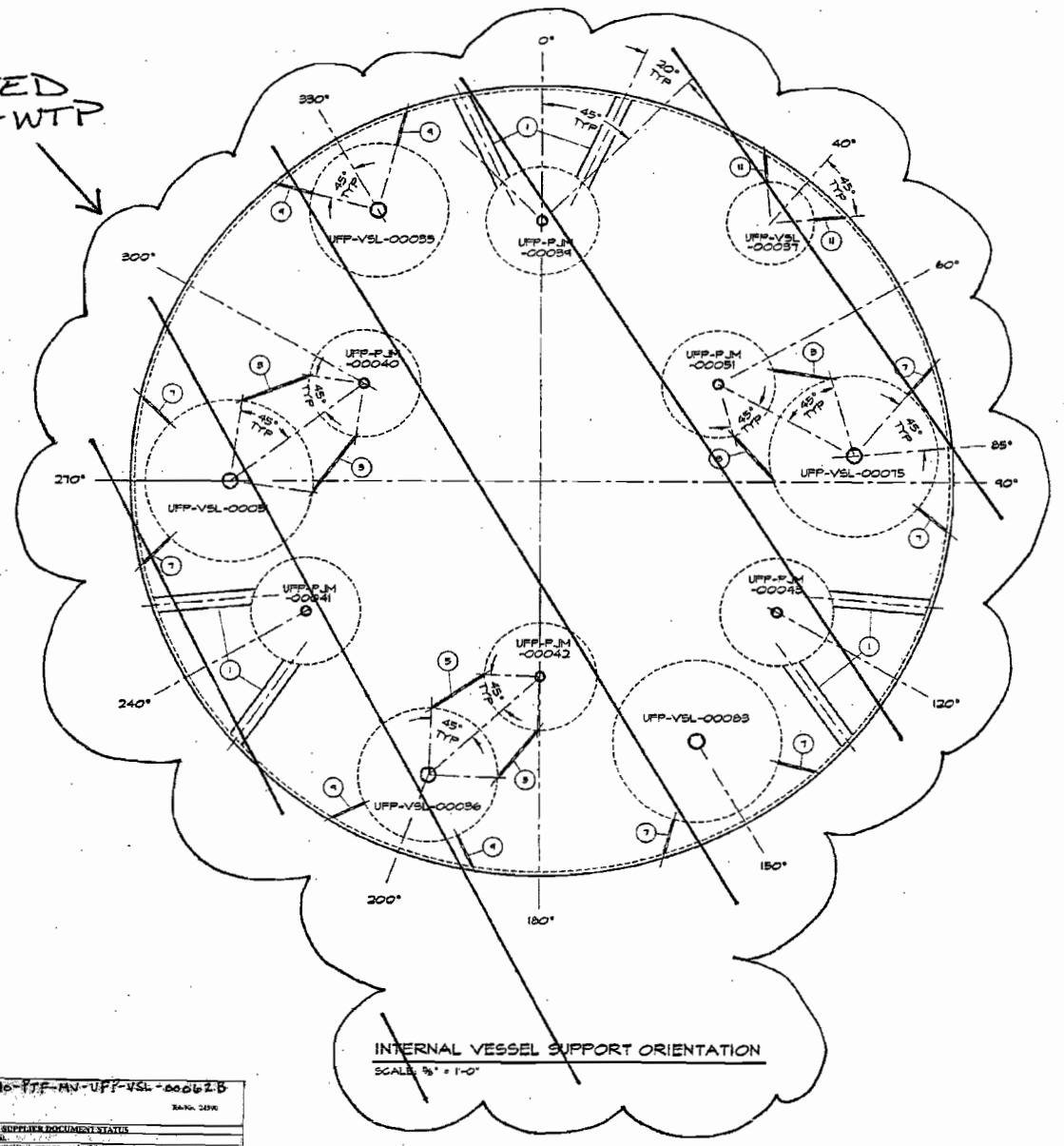

INTERNAL VESSEL SUPPORT ORIENTATION
SCALE: ⅜" = 1'-0"

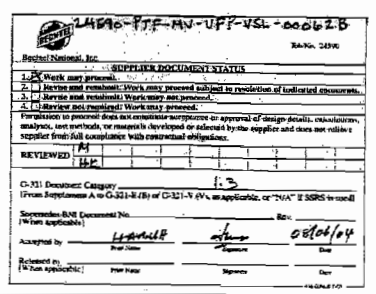

Some information on page this may appear to be illegible, however, the information necessary is legible.

BILL OF MATERIALS

MK	THICK/SIZE	MATERIAL	HEAT NO.	DESCRIPTION	QTY
1	4" SCH 40	WELDED SA-312-TP316 w/ 0.030% max. C		OUTER PULSE JET MIXER SUPPORT PIPE	12
2					
3	½"	SA-240-316 w/ 0.030% max. C		INNER PULSE JET MIXER SUPPORT PLATE (@ 36" CV)	8
4					
5	½"	SA-240-316 w/ 0.030% max. C		INNER PULSE JET MIXER SUPPORT PLATE (@ 30" CV)	4
6					
7	½"	SA-240-316 w/ 0.030% max. C		36" CHARGE VESSEL SUPPORT PLATE	12
8					
9	½"	SA-240-316 w/ 0.030% max. C		30" CHARGE VESSEL SUPPORT PLATE	4
10					
11	½"	SA-240-316 w/ 0.030% max. C		18" CHARGE VESSEL SUPPORT PLATE	2

CONSTRUCTION NOTES

NOTE 2: WHERE PLATE MATERIAL IS SPECIFIED AS ASME SA240, ASME SA479 MATERIAL MAY BE SUBSTITUTED.

→ ADD NOTE, BY RPP-WTP

REVISIONS

NO	DESCRIPTION	REV BY	APD BY	DATE
2	REVISED PER ENGINEERING CHANGES	SMT	MDH	08/07/04
1	REVISED PER CUSTOMER COMMENTS	MJV	MDH	09/03/03

NORTHWEST COPPER WORKS, INC.
1903 N. RIVER STREET • PORTLAND, OREGON • 97227

180" I.D. ULTRAFILTER PERMEATE VESSEL INTERNAL SUPPORT

BECHTEL NATIONAL INC.
3000 George Washington Way
Richland, Washington 99352

EQUIP. NO. UFP-VSL-00062B
P.O. NO. 24590-Q-POD-MNAO-00008 REV 0
SCALE AS NOTED | JOB NO. 3006F | DWG. NO. D-3006F | REV 2
DATE 08/06/03 | CHKD. BY MDH
DWN. BY MJV | APPD. BY MJV | SHT. NO. 1 OF 2

TYPO, CHANGE TO POD BY RPP-WTP

→ BECHTEL DOC. No. 24590-Q-POD-MVAO-00001-03-42 REV. 002

POD

R1033813

P:\Swap\ACAD\03\P3006F-2.dwg, 6/7/2004 4:12:27 PM

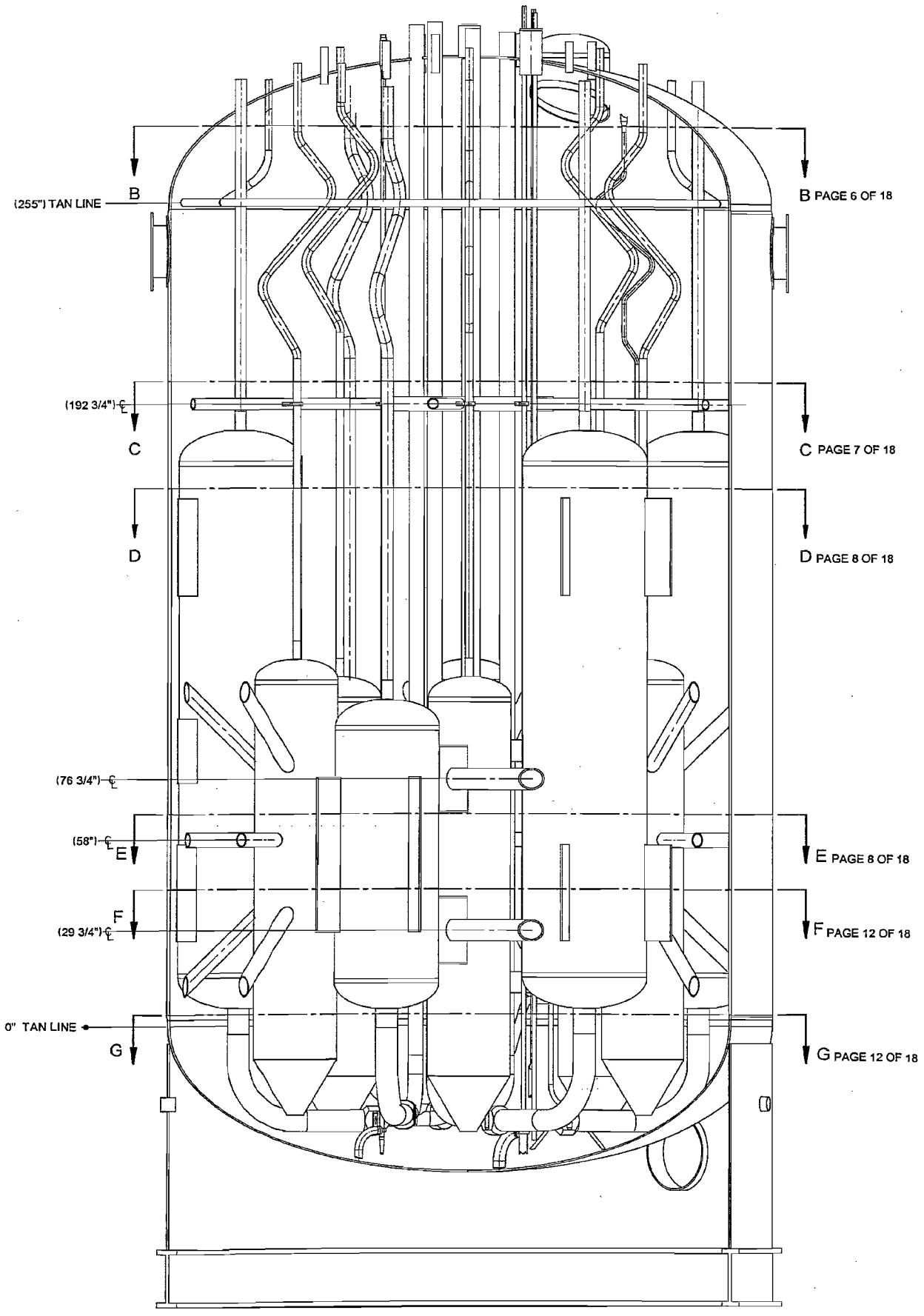

NORTH ELEVATION

BILL OF MATERIALS

MK	THICK/SIZE	MATERIAL	HEAT NO.	DESCRIPTION	QTY
12	3" SCHED 80S	SA 312 TP 316/316L 0.030% MAX C		SMLS PIPE, THERMAL EXPANSION S-BEND	2
13	2" SCHED 80S	SA 312 TP 316/316L 0.030% MAX C		SMLS PIPE, THERMAL EXPANSION S-BEND	6
14	1" SCHED 80S	SA 312 TP 316/316L 0.030% MAX C		SMLS PIPE, THERMAL EXPANSION S-BEND	1
15	4" SCHED 80S	SA 312 TP 316/316L 0.030% MAX C		SMLS PIPE, CENTER SUPPORT	1
16	3" SCHED 80S	SA 312 TP 316/316L 0.030% MAX C		SMLS PIPE, RADIAL SUPPORT	6
		NOT USED			
		NOT USED			
19	3/4"X 6 1/4"	SA 240 TP 316/316L 0.030% MAX C		PLATE, 4" GUIDE RING SUPPORT	2
20	3/4"X 6 1/4"	SA 240 TP 316/316L 0.030% MAX C		PLATE, 4" GUIDE RING SUPPORT	3
21	3/4"X 1"	SA 240 TP 316/316L 0.030% MAX C		PLATE, 4" GUIDE RING	15
22	1/2"X 1"	SA 240 TP 316/316L 0.030% MAX C		PLATE, 2" GUIDE RING	7
23	1"X 3 5/8"	SA 240 TP 316/316L 0.030% MAX C		PLATE, 2" GUIDE RING SUPPORT	3
24	1"X 3 5/8"	SA 240 TP 316/316L 0.030% MAX C		PLATE, 2" GUIDE RING SUPPORT	2
		NOT USED			
26	1"X 3 5/8"	SA 240 TP 316/316L 0.030% MAX C		PLATE, 2" GUIDE RING SUPPORT	1
		NOT USED			
28	1/2"X 2 1/2"	SA 240 TP 316/316L 0.030% MAX C		PLATE, 1" GUIDE RING SUPPORT	1
29	1/2"X 1"	SA 240 TP 316/316L 0.030% MAX C		PLATE, 1" GUIDE RING	13
30	1/2"X 2 1/2"	SA 240 TP 316/316L 0.030% MAX C		PLATE, 1" GUIDE RING SUPPORT	2
31	3" SCHED 80S	SA 312 TP 316/316L 0.030% MAX C		SMLS PIPE	3
32	1/2"	SA 240 TP 316/316L 0.030% MAX C		PLATE, Ø 3 1/2"	3
33	1"X 1"X 2 1/2"	SA 240 TP 316/316L 0.030% MAX C		PLATE	3
34	6" SCHED 80S	SA 312 TP 316/316L 0.030% MAX C		SMLS PIPE, KICKER SUPPORT	4
35	1/2" MIN	SA 240 TP 316/316L 0.030% MAX C		KICKER SUPPORT PLATE	8
36	4" SCHED 80S	SA 312 TP 316/316L 0.030% MAX C		SMLS PIPE, OUTER PJM SUPPORT	6
37	1/2" MIN	SA 240 TP 316/316L 0.030% MAX C		36" CHARGE VESSEL SUPPORT PLATE	4
38	2" SCHED 160S	SA 312 TP 316/316L 0.030% MAX C		SMLS PIPE	1
39	1/2"X 2 3/4"X 2 3/4"	SA 240 TP 316/316L 0.030% MAX C		PLATE	1
40	3" SCHED 160S	SA 312 TP 316/316L 0.030% MAX C		SMLS PIPE	1
41	1/2"X 3 7/8"X 3 7/8"	SA 240 TP 316/316L 0.030% MAX C		PLATE	1
42	6" SCHED 80S	SA 312 TP 316/316L 0.030% MAX C		SMLS PIPE, CENTER PJM SUPPORT	2
43	6" SCHED 80S	SA 312 TP 316/316L 0.030% MAX C		SMLS PIPE, CENTER PJM SUPPORT	4
44	4" SCHED 80S	SA 312 TP 316/316L 0.030% MAX C		SMLS PIPE, CENTER PJM SUPPORT	2
45	4" SCHED 80S	SA 312 TP 316/316L 0.030% MAX C		SMLS PIPE, CENTER PJM SUPPORT	2
46	4" SCHED 80S	SA 312 TP 316/316L 0.030% MAX C		SMLS PIPE, CENTER PJM SUPPORT	4
47	1"X 6 1/4"	SA 240 TP 316/316L 0.030% MAX C		PLATE, 4" GUIDE RING SUPPORT	2
48	1"X 6 1/4"	SA 240 TP 316/316L 0.030% MAX C		PLATE, 4" GUIDE RING SUPPORT	2
49	1"X 6 1/4"	SA 240 TP 316/316L 0.030% MAX C		PLATE, 4" GUIDE RING SUPPORT	4
50	1"X 6 1/4"	SA 240 TP 316/316L 0.030% MAX C		PLATE, 4" GUIDE RING SUPPORT	2
51	1"X 2 1/2"	SA 240 TP 316/316L 0.030% MAX C		PLATE, 1" GUIDE RING SUPPORT	1
52	1"X 2 1/2"	SA 240 TP 316/316L 0.030% MAX C		PLATE, 1" GUIDE RING SUPPORT	2
53	1"X 2 1/2"	SA 240 TP 316/316L 0.030% MAX C		PLATE, 1" GUIDE RING SUPPORT	2
54	1/2" MIN	SA 240 TP 316/316L 0.030% MAX C		KICKER SUPPORT PLATE	4
55	6" SCHED 80S	SA 312 TP 316/316L 0.030% MAX C		SMLS PIPE, KICKER SUPPORT PIPE	2

3 SCREENING IS REQUIRED FOR DRAWING TYPES IDENTIFIED IN 24590-WTP-GPP-SREG-002

'D' SIZE - 34x22
COMPUTER GENERATED -
MANUAL DESIGN CHANGES NOT PERMITTED

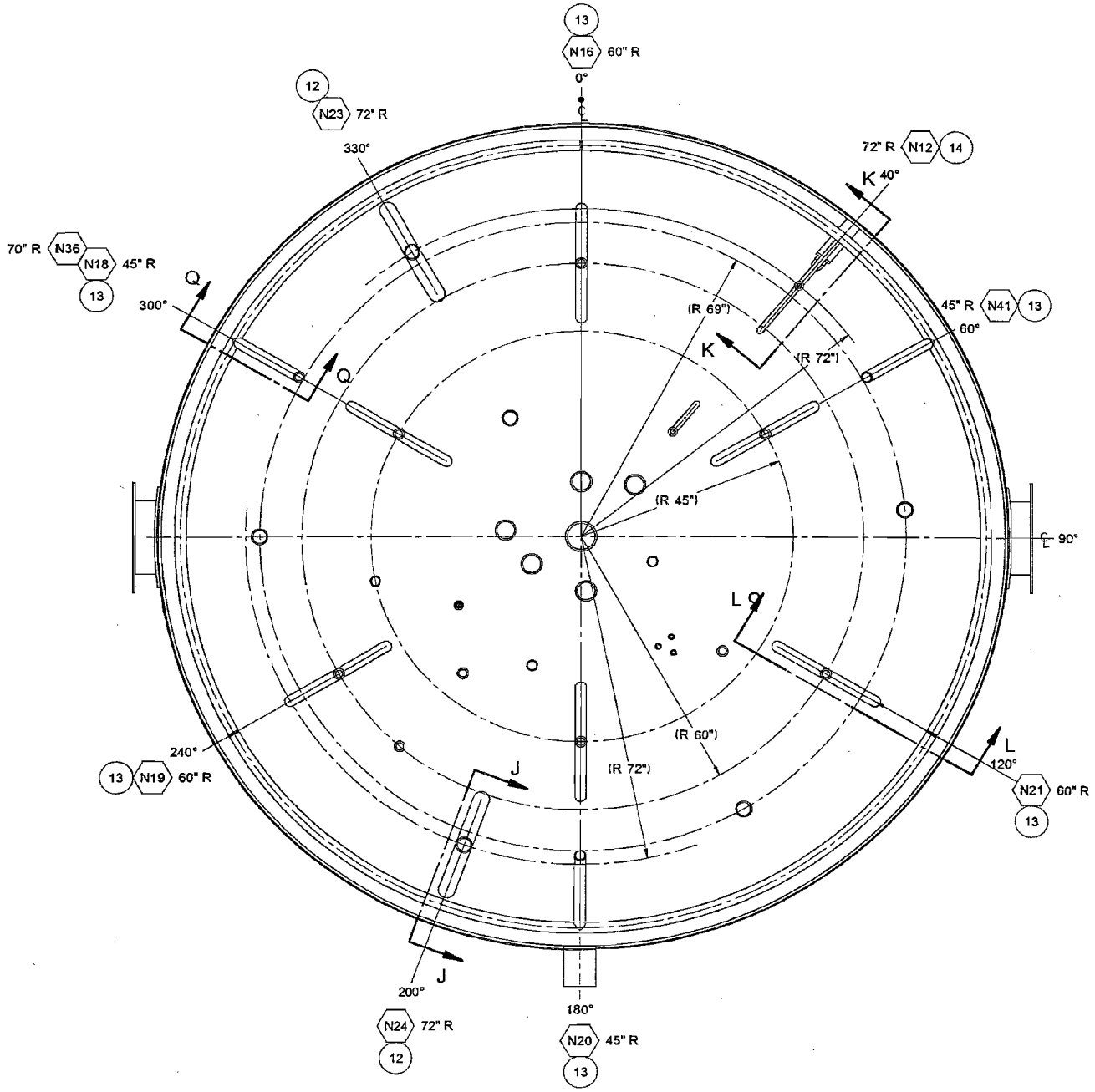

SECTION B-B
SCALE: 1/16

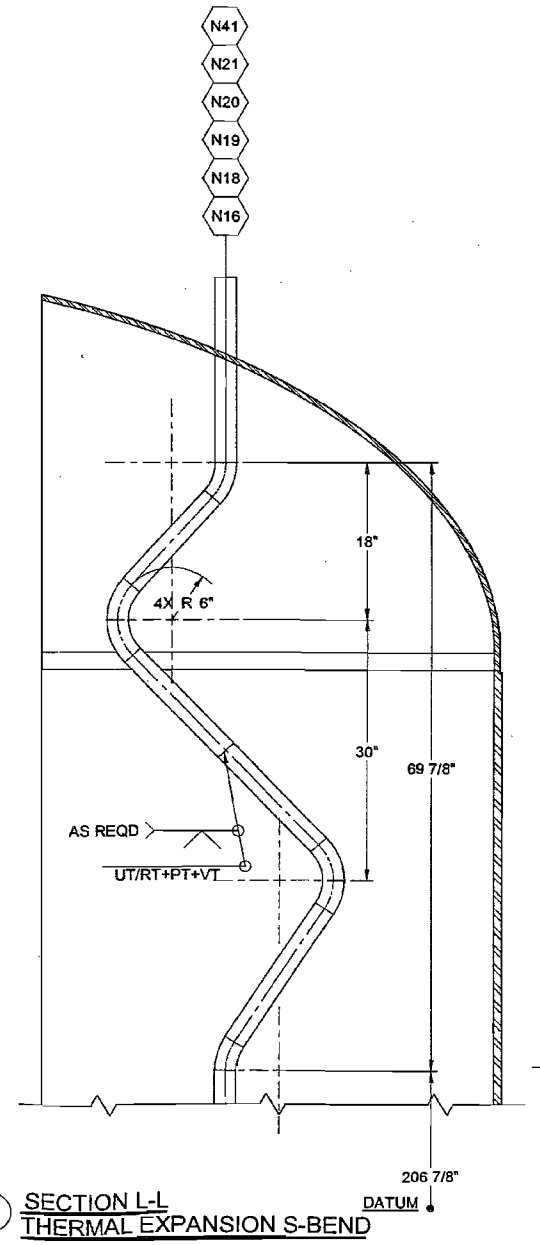

13 SECTION L-L
THERMAL EXPANSION S-BEND
SCALE: 1/10

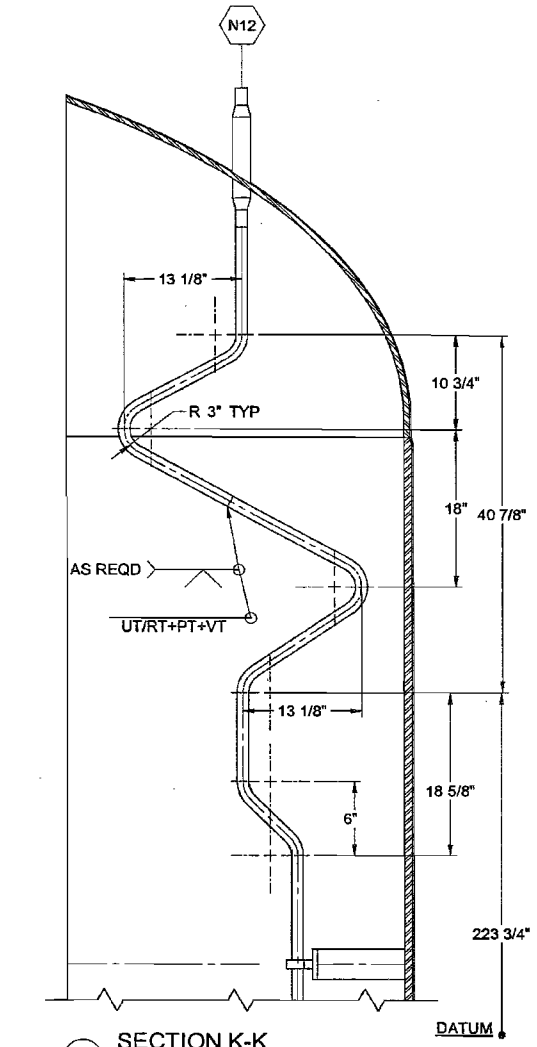

14 SECTION K-K
THERMAL EXPANSION S-BEND
SCALE: 1/10

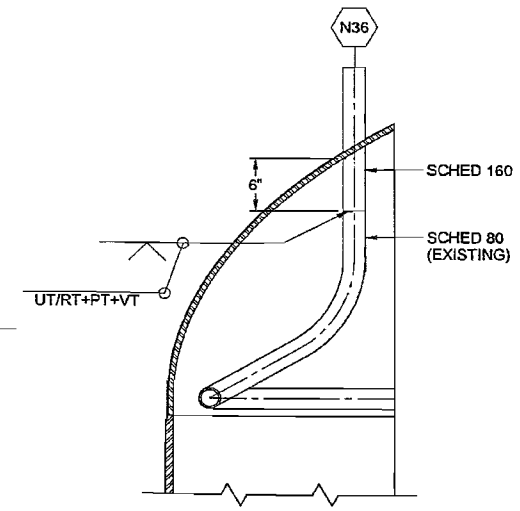

SECTION Q-Q
SCALE: 1/10

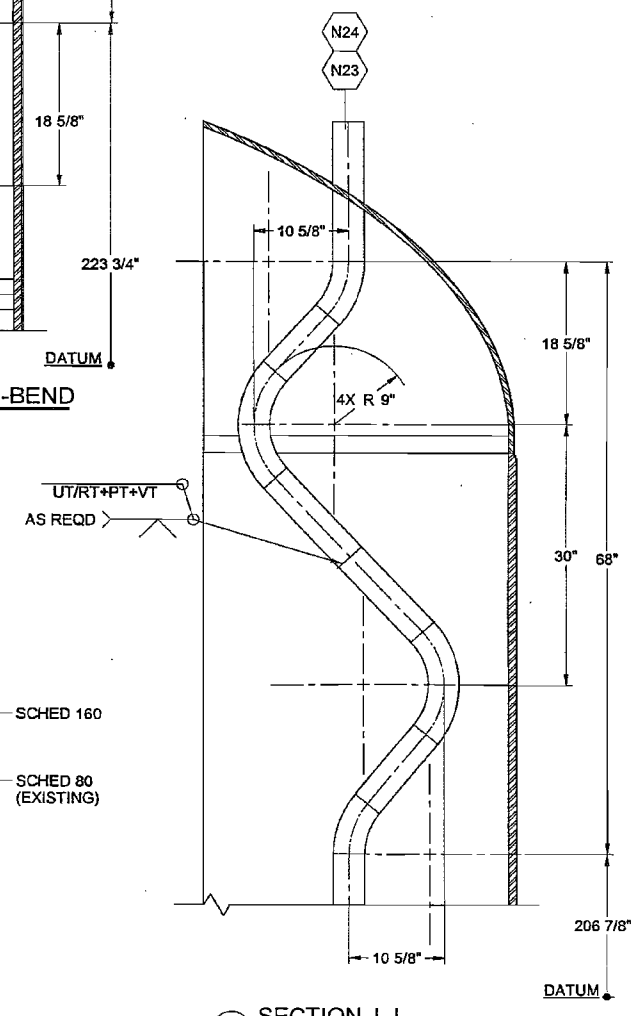

12 SECTION J-J
THERMAL EXPANSION S-BEND
SCALE: 1/10

SCREENING IS REQUIRED FOR DRAWING TYPES IDENTIFIED IN 24590-WTP-GPP-SREC-002

"D" SIZE - 34x22
COMPUTER GENERATED -
MANUAL DESIGN CHANGES NOT PERMITTED

NOTES:

1. GUIDE RINGS ARE WELDED AFTER CORRECTLY POSITIONING THE GUIDE RING SUPPORTS. GUIDE RINGS SHALL MAINTAIN .125 DIAMETRAL CLEARANCE WITH PIPE.

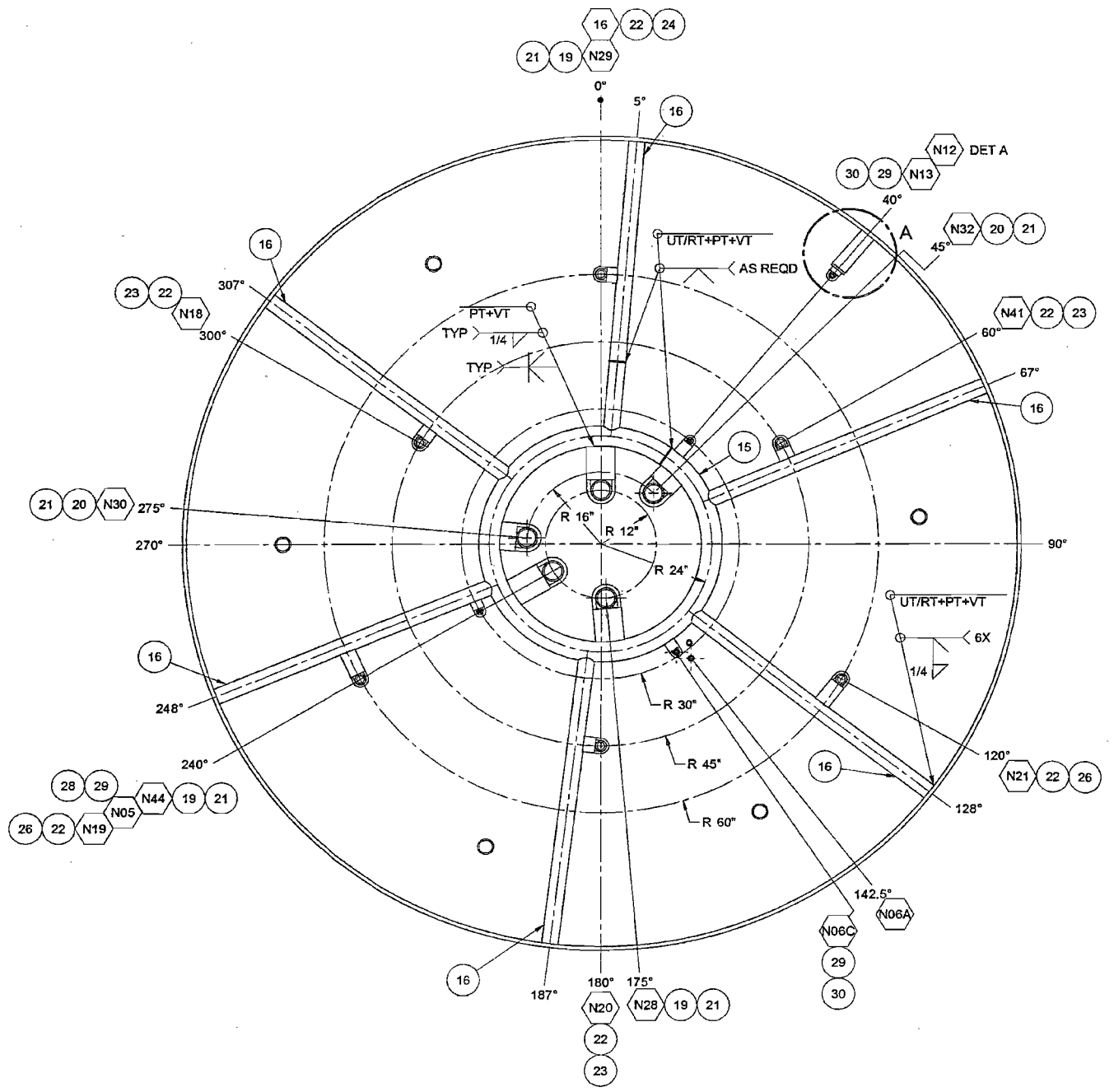

SECTION C-C
SCALE: 1/16

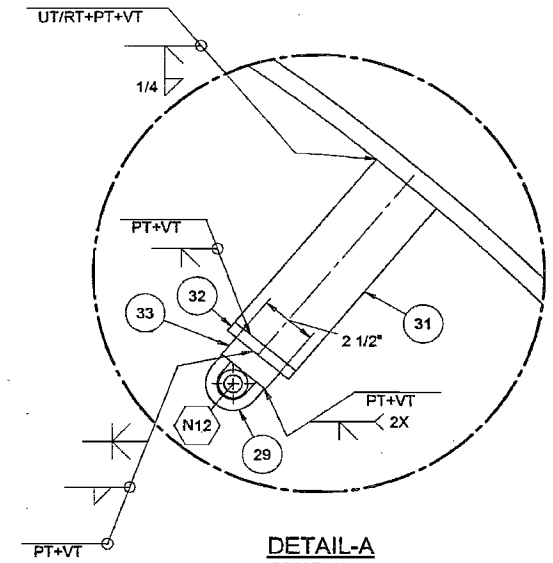

DETAIL-A
SCALE: 1/4

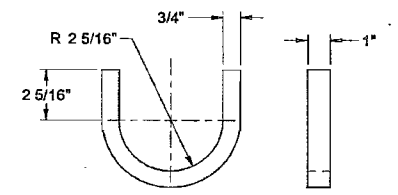

21 GUIDE RING
SCALE: 1/4

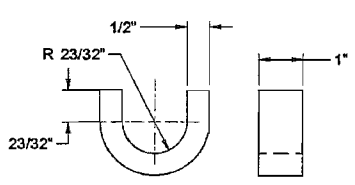

29 GUIDE RING
SCALE: 1/2

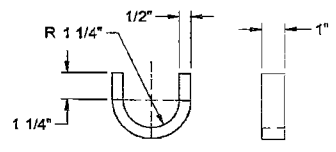

22 GUIDE RING
SCALE: 1/4

FORM D_MASTER 03/2003
3 SCREENING IS REQUIRED FOR DRAWING TYPES IDENTIFIED IN 24590-WTP-GPP-SREG-002
'D' SIZE - 34x22
COMPUTER GENERATED - MANUAL DESIGN CHANGES NOT PERMITTED

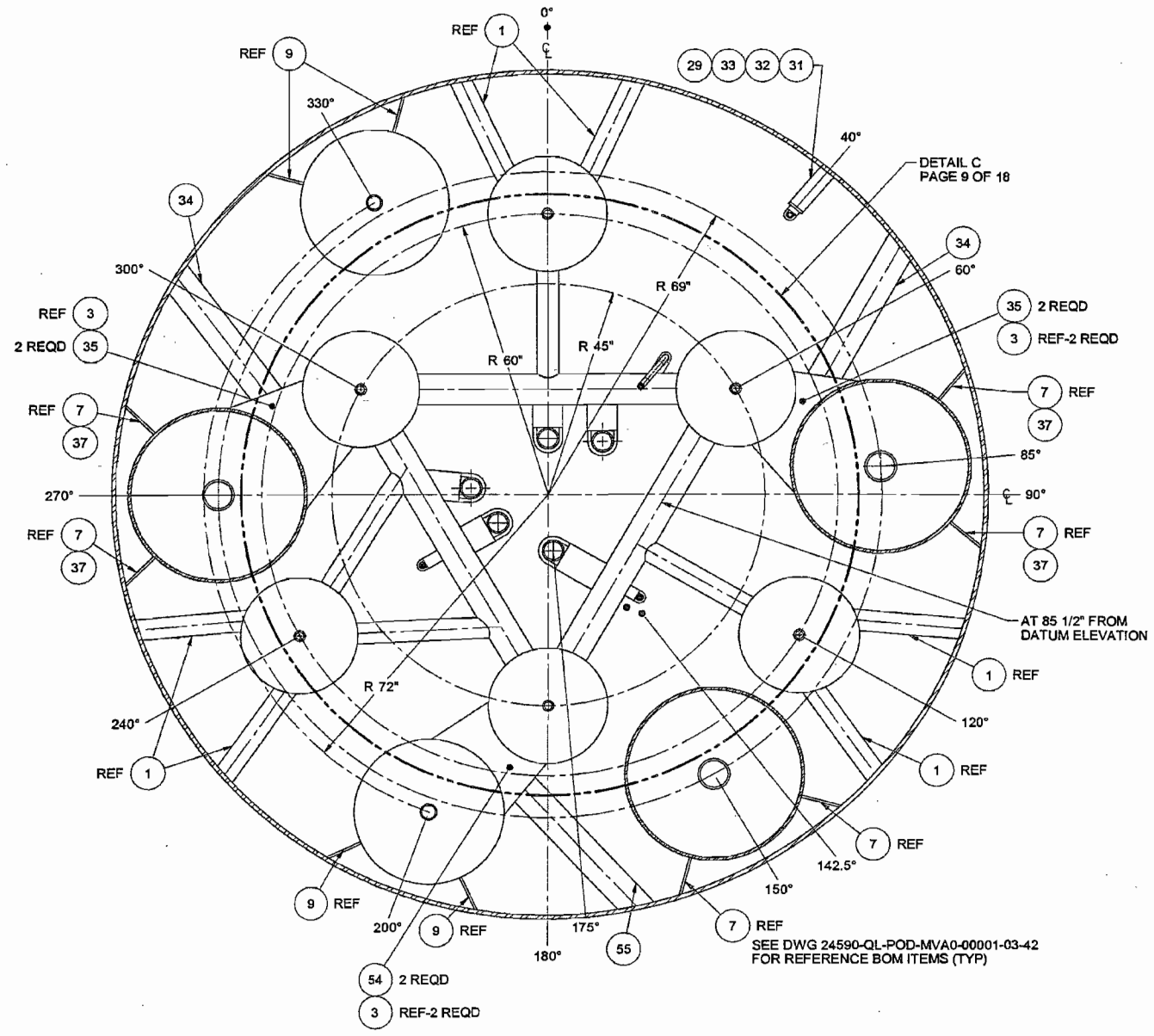

SECTION D-D
SCALE: 1/16

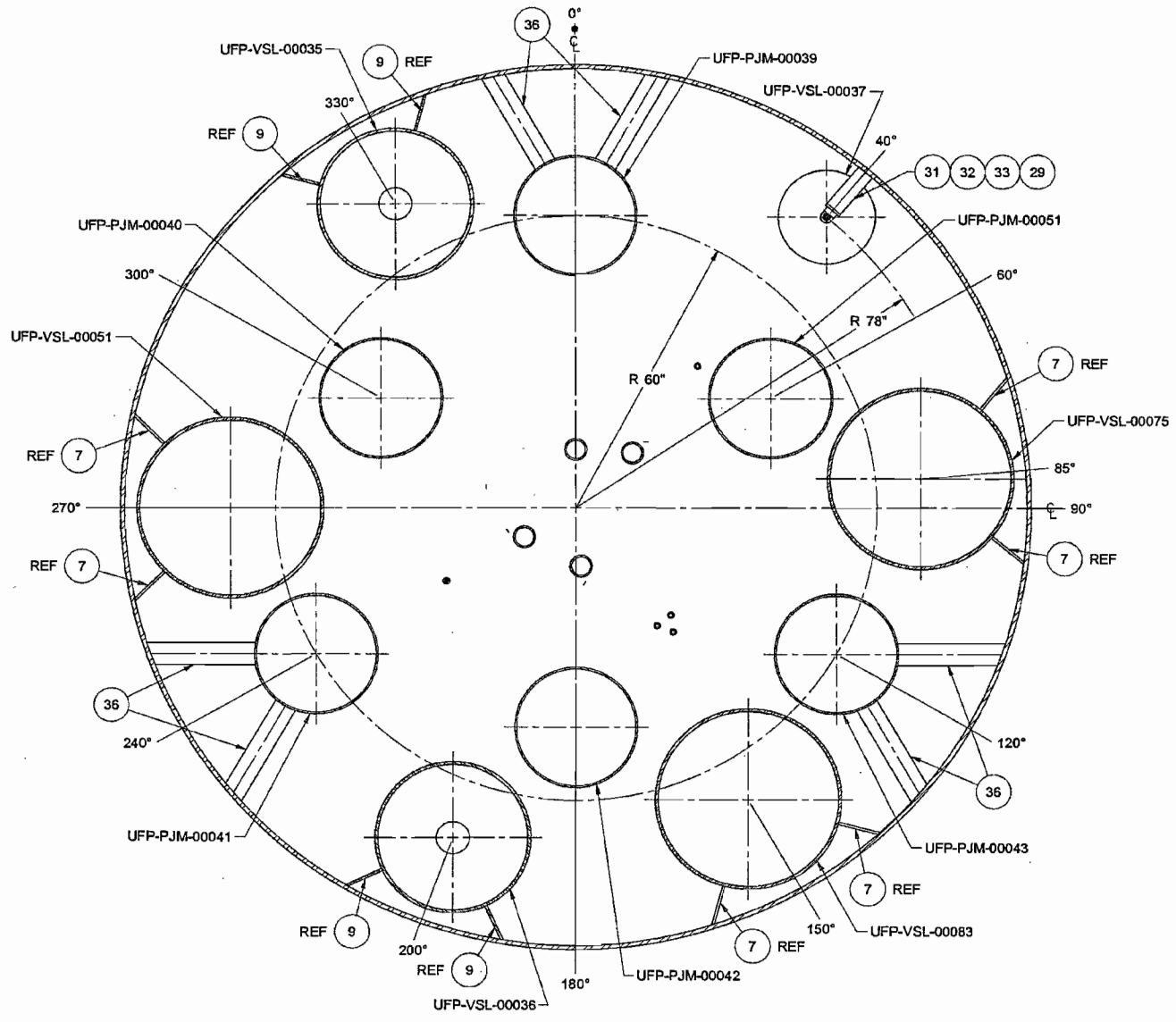

SECTION E-E
SCALE: 1/16

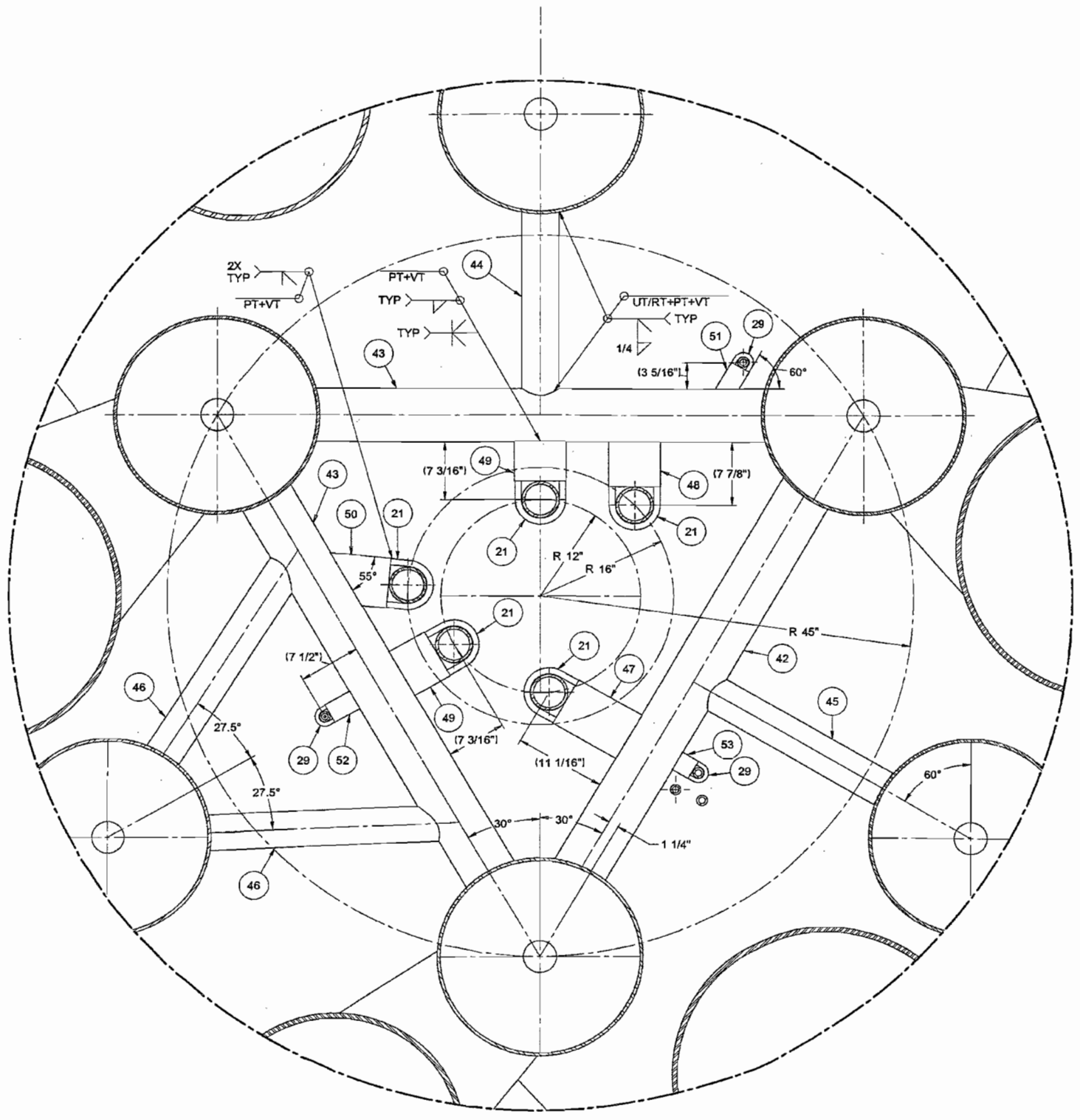

DETAIL C
SCALE: 1/8

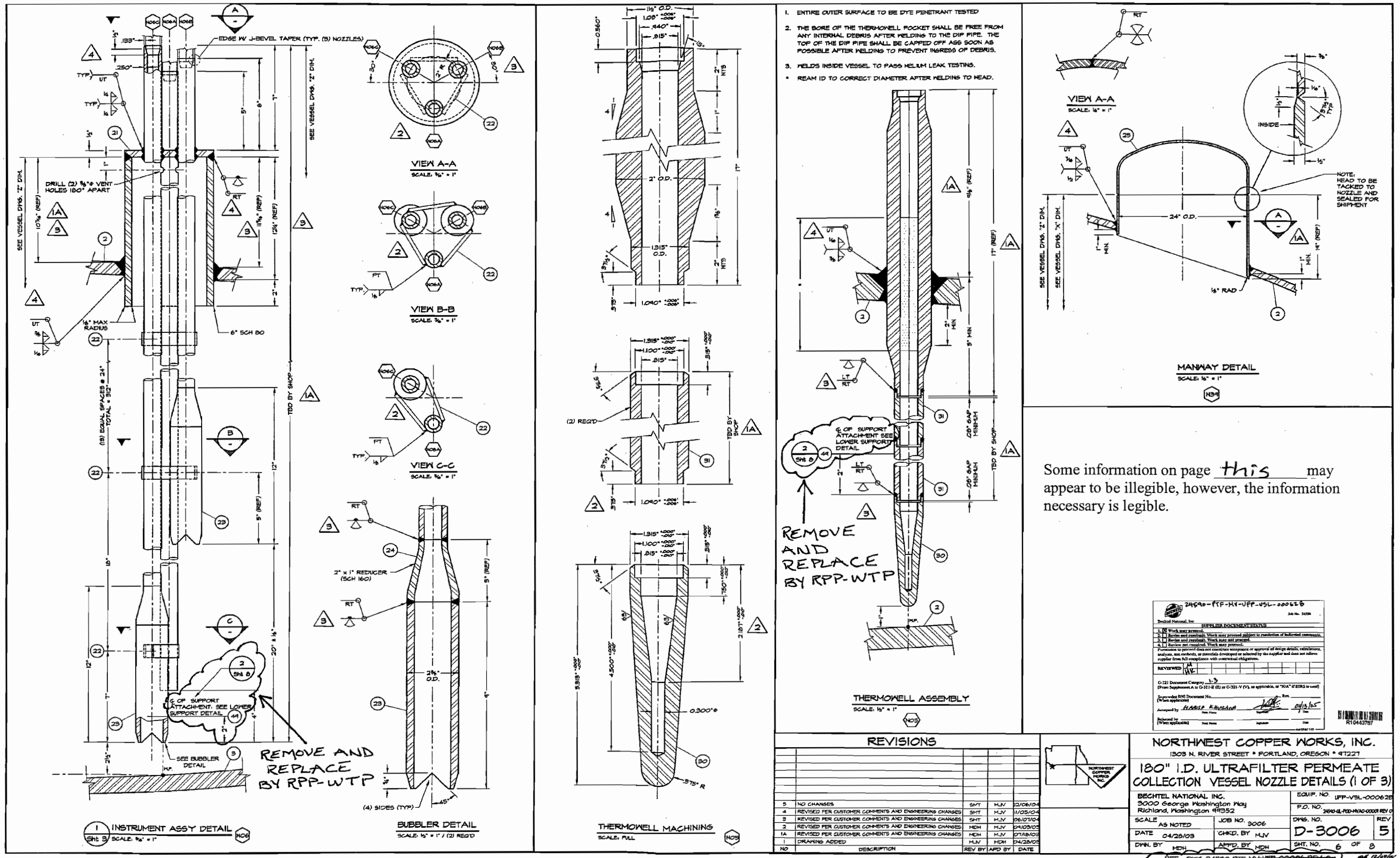

Some information on page this may appear to be illegible, however, the information necessary is legible.

24590-PTF-MV-UFP-VSL-00062B

Bechtel National, Inc.

SUPPLIER DOCUMENT STATUS

1. [X] Work may proceed.
2. [ ] Review and resubmit. Work may proceed subject to resolution of indicated comments.
3. [ ] Review and resubmit. Work may not proceed.
4. [ ] Review not required. Work may proceed.

Permission to proceed does not constitute acceptance or approval of design details, calculations, analyses, test methods, or materials developed or selected by the supplier and does not relieve supplier from full compliance with contractual obligations.

REVIEWED

G-321 Document Category 1.3
(From Supplement A to G-321-II (E) or G-321-V (V), as applicable, or "N/A" if SSRS is used)

Superseded BNI Document No. Rev.
(When applicable)

Accepted by HARISH KHUSHAN 04/13/05
Print Name Signature Date

Released by
(When applicable) Print Name Signature Date

R10443787

REVISIONS

NO	DESCRIPTION	REV BY	APD BY	DATE
5	NO CHANGES	SMT	MJV	12/06/04
4	REVISED PER CUSTOMER COMMENTS AND ENGINEERING CHANGES	SMT	MJV	11/05/04
3	REVISED PER CUSTOMER COMMENTS AND ENGINEERING CHANGES	SMT	MJV	06/07/04
2	REVISED PER CUSTOMER COMMENTS AND ENGINEERING CHANGES	MDH	MJV	04/03/03
1A	REVISED PER CUSTOMER COMMENTS AND ENGINEERING CHANGES	MDH	MJV	07/18/03
1	DRAWING ADDED	MJV	MDH	04/28/03

NORTHWEST COPPER WORKS, INC.
1303 N. RIVER STREET • PORTLAND, OREGON • 97227

180" I.D. ULTRAFILTER PERMEATE COLLECTION VESSEL NOZZLE DETAILS (1 OF 3)

BECHTEL NATIONAL INC.
3000 George Washington Way
Richland, Washington 99352

SCALE AS NOTED	JOB NO. 3006	EQUIP. NO. UFP-VSL-00062B	
DATE 04/28/03	CHKD. BY MJV	P.O. NO. 24590-QL-POD-MVAO-00001 REV 0	
DWN. BY MDH	APPD. BY MDH	DWG. NO. D-3006	REV 5
		SHT. NO. 6 OF 8	

~~REF. DWG 24590-PTF-MV-UFP-00006 REV 0~~ 12/09/04
BECHTEL DOC. 24590-QL-POD-MVAO-00001-03-32 REV. 00E
DELETED BY RPP-WTP

P:\Swap\ACAD\03\D3006-5 Mon Dec 06 09:43:08 2004

Some information on all page(s) may appear to be illegible, however, the information necessary for assuring adequate design is legible.

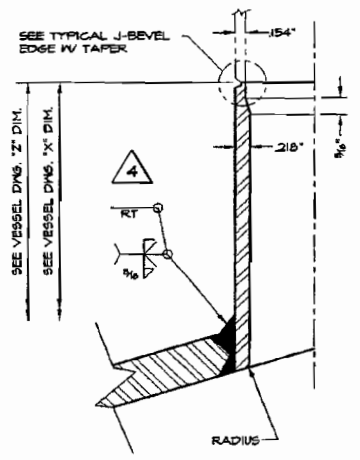

2" SCH 80 FLUSH NOZZLE
SCALE: 3/4" = 1"
N46 2

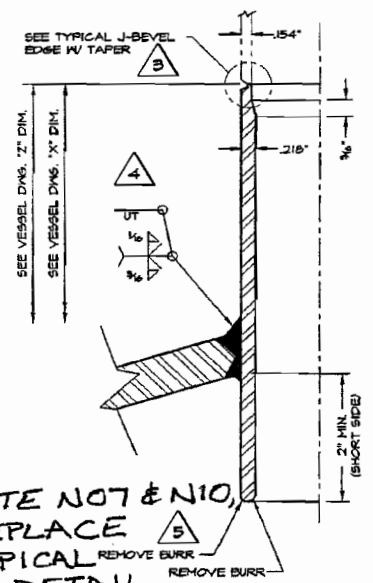

DELETE N07 & N10, AND REPLACE WITH TYPICAL SCH 160 DETAIL BY RPP-WTP 5

2" SCH 80 NOZZLE W/ INT. PROJECTION
SCALE: 3/4" = 1"
N07 N09 N10 N11 N14 2 3

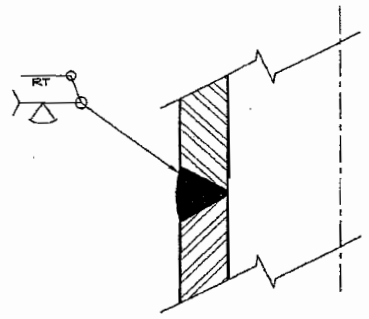

TYPICAL CIRCULAR WELD ON DIP TUBE
NO SCALE

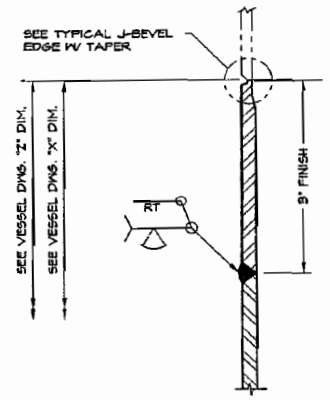

NOZZLE STUB SPLICE
SCALE: 3/4" = 1"
N18 N26 N28 N30 N32 N41 N45 4

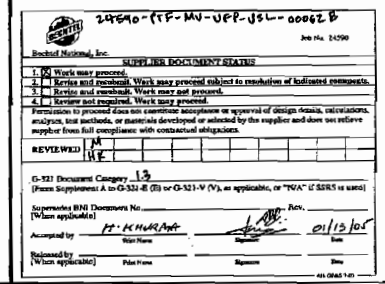

REMOVE ITEM 49 FOR N05 & N06 ONLY - BY RPP-WTP

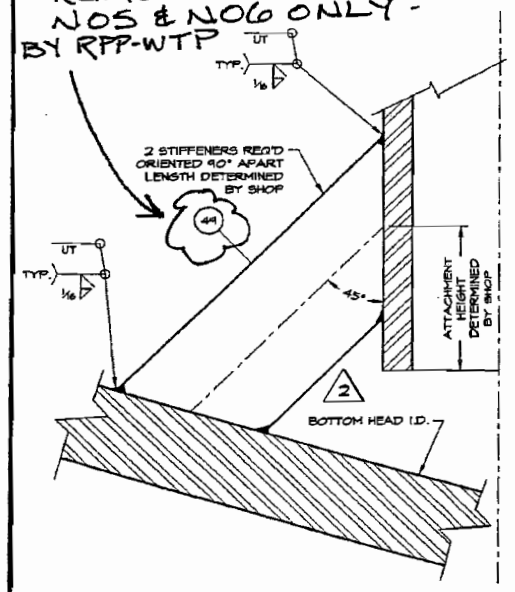

2 / - TYP. LOWER SUPPORT FOR DIP TUBES
NO SCALE

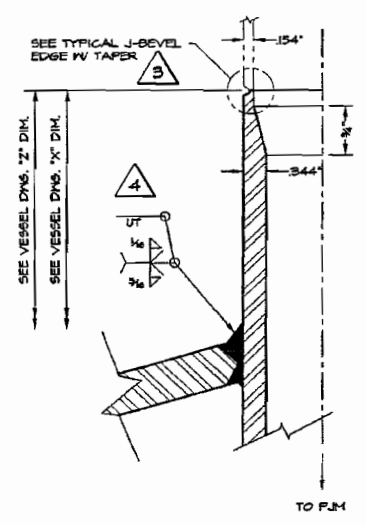

2" SCH 160 INLET TO INTERNALS
SCALE: 3/4" = 1"
N16 N18 N19 N20 N21 N41

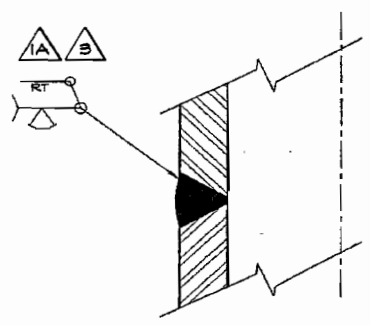

TYP. CIRC. WELD ON INLET TO INTERNALS
NO SCALE

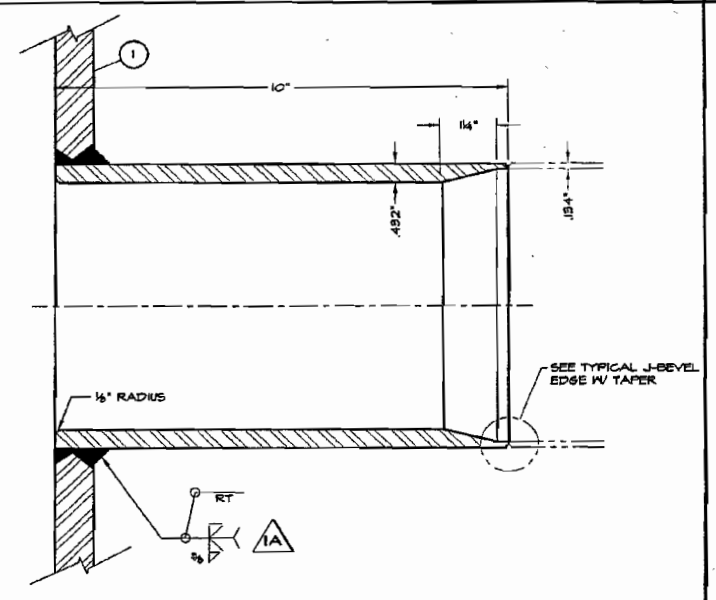

6" SCH 80 OVERFLOW NOZZLE THRU SHELL
SCALE: ½" = 1"
N07

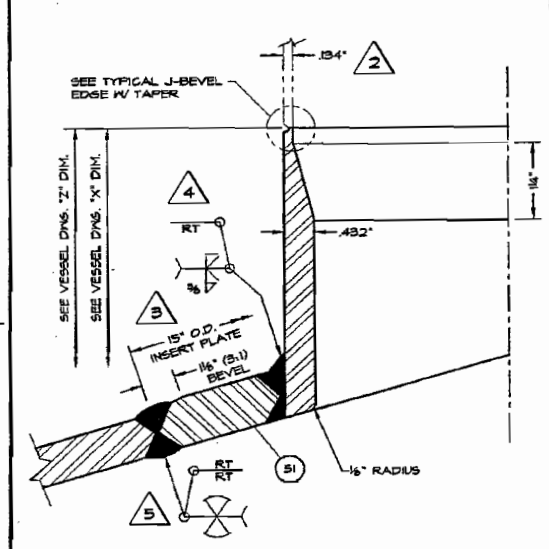

6" SCH 80 FLUSH NOZZLE
SCALE: 3/4" = 1"
N22

R10443789

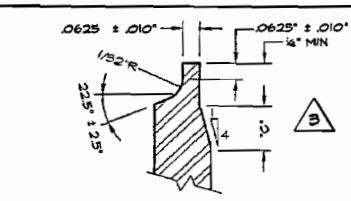

TYPICAL J-BEVEL EDGE W/ TAPER
SCALE: NONE

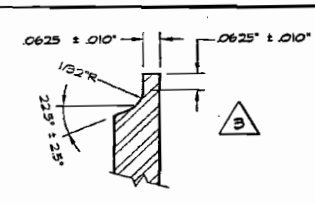

TYPICAL J-BEVEL EDGE W/O TAPER
SCALE: NONE

REVISIONS

NO	DESCRIPTION	REV BY	APP'D BY	DATE
5	UPDATED NOZZLE N22 RADIOGRAPHY REQUIREMENTS	SMT	MJV	12/06/04
4	UPDATED FOR BLACK CELL REQUIREMENTS	SMT	MJV	11/05/04
3	REVISED PER CUSTOMER COMMENTS AND ENGINEERING CHANGES	SMT	MJV	06/07/04
2	REVISED PER CUSTOMER COMMENTS AND ENGINEERING CHANGES	MDH	MJV	04/05/03
1A	REVISED PER CUSTOMER COMMENTS AND ENGINEERING CHANGES	MDH	MJV	07/16/03
1	DRAWING ADDED	MJV	MDH	04/28/03

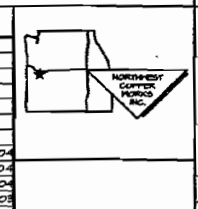

NORTHWEST COPPER WORKS, INC.
1303 N. RIVER STREET • PORTLAND, OREGON • 97227

180" I.D. ULTRAFILTER PERMEATE COLLECTION VESSEL NOZZLE DETAILS (3 of 3)

BECHTEL NATIONAL INC.
3000 George Washington Way
Richland, Washington 99352

EQUIP. NO. UFP-VSL-000626
P.O. NO. 24590-QL-POD-MVAO-00001 REV 0
SCALE AS NOTED
JOB NO. 3006
DWG. NO. D-3006 REV 5
DATE 04/28/03
CHKD. BY MJV
DWN. BY MDH
APP'D. BY MDH
SHT. NO. 8 OF 8

~~REF. DWG 24590-PTF-MV-UFP-00006 REV 5~~
BECHTEL DOC. 24590-QL-POD-MVAO-00001-03-34 REV. 00 DATE
DELETED BY RPP-WTP

P:\Swep\ACAD\03\03006-5 Mon Dec 06 09:42:44 2004

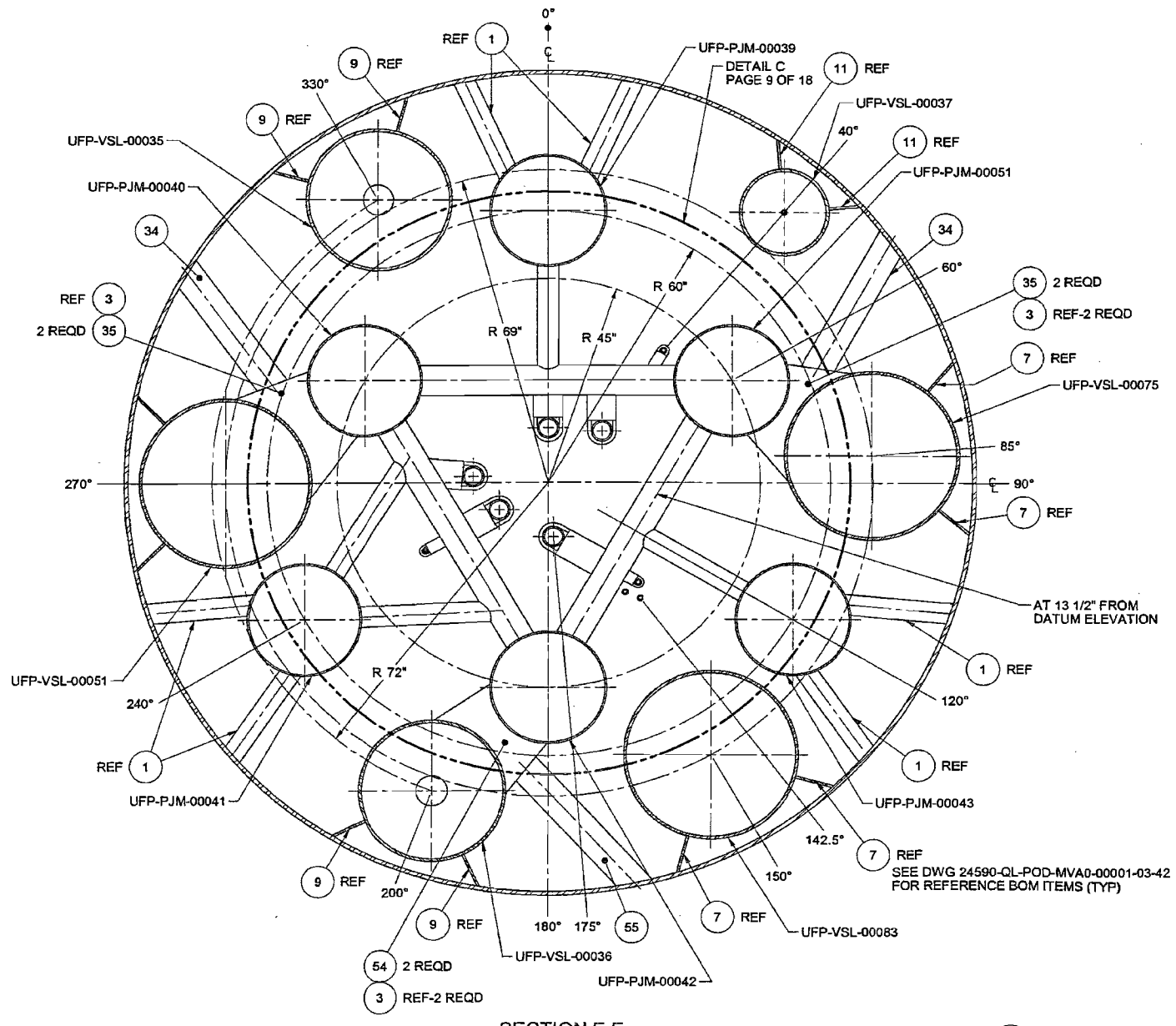

SECTION F-F
SCALE: 1/16

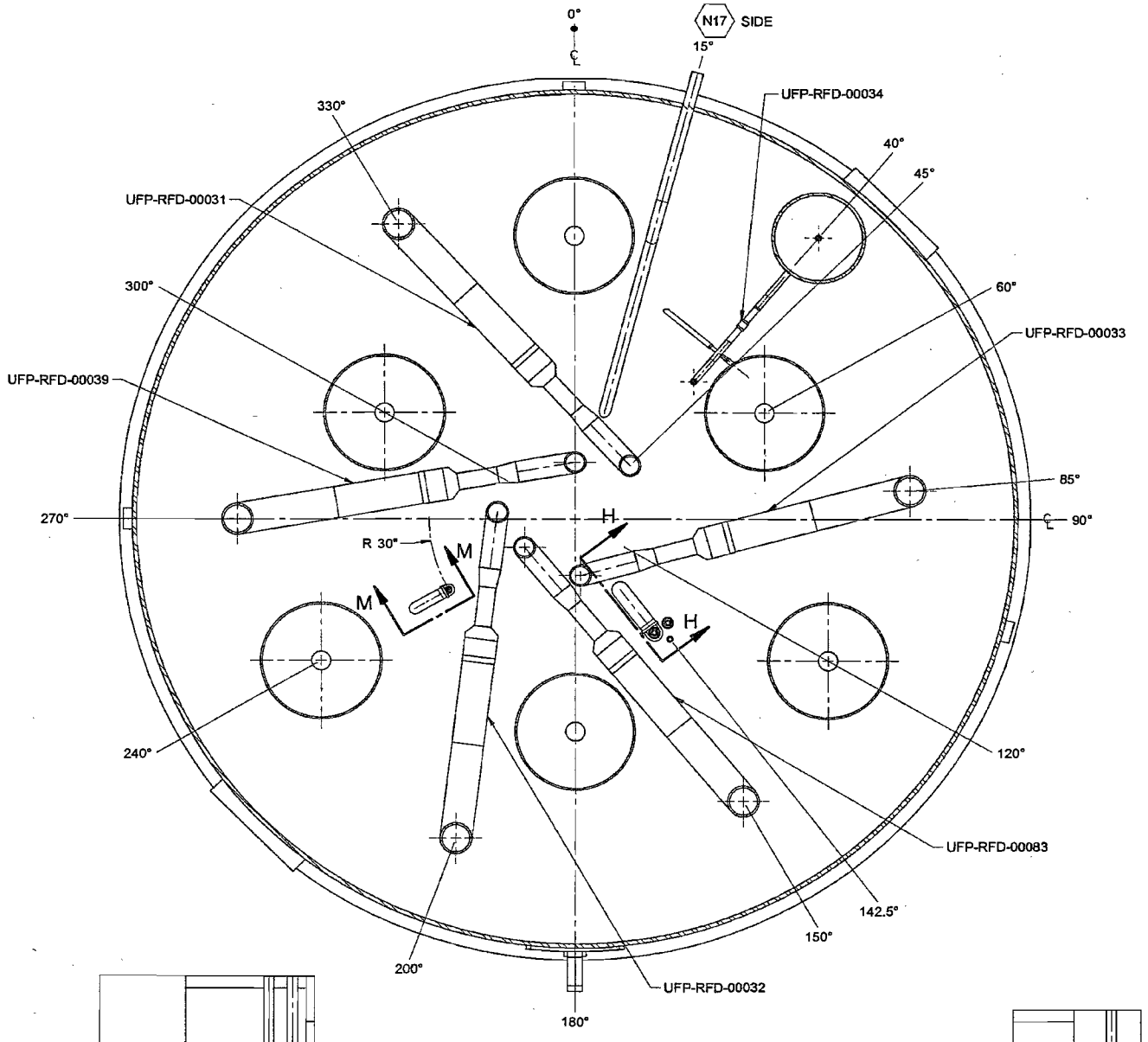

SECTION G-G
SCALE: 1/16

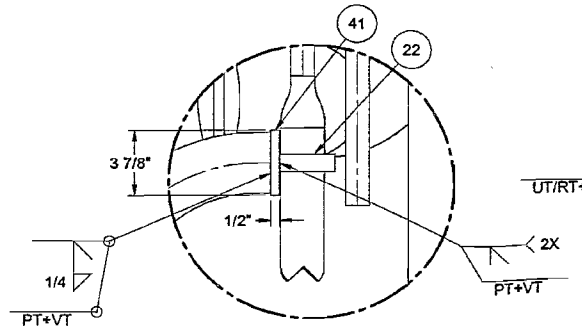

DETAIL E
SCALE: 1/5

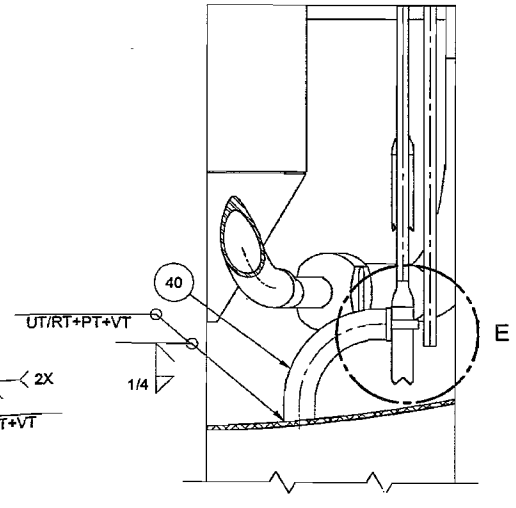

SECTION H-H
SCALE: 1/10

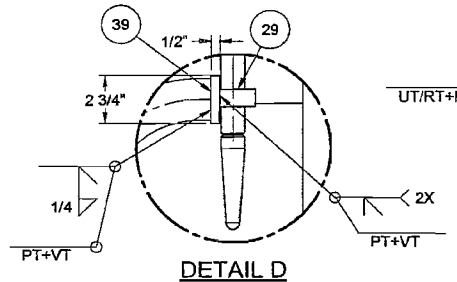

DETAIL D
SCALE: 1/5

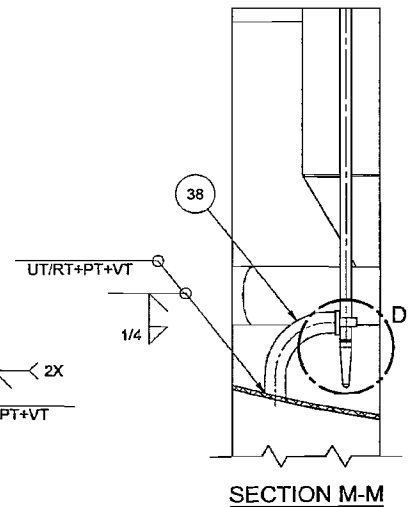

SECTION M-M
SCALE: 1/10

FORM D_MASTER 03/2003

3 SCREENING IS REQUIRED FOR DRAWING TYPES IDENTIFIED IN 24590-WTP-GPP-SREG-002

'D' SIZE - 34x22
COMPUTER GENERATED -
MANUAL DESIGN CHANGES NOT PERMITTED

DELETE AND REPLACE, BY RPP-WTP

DELETE AND REPLACE, BY RPP-WTP

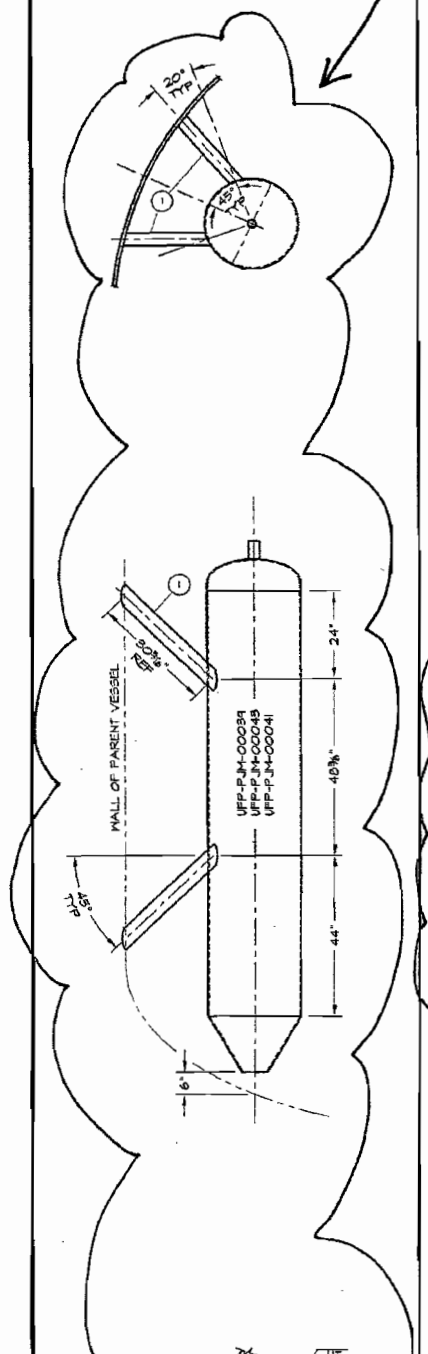

TYPICAL OUTER PJM PIPE SUPPORT
SCALE: ½" = 1'-0"

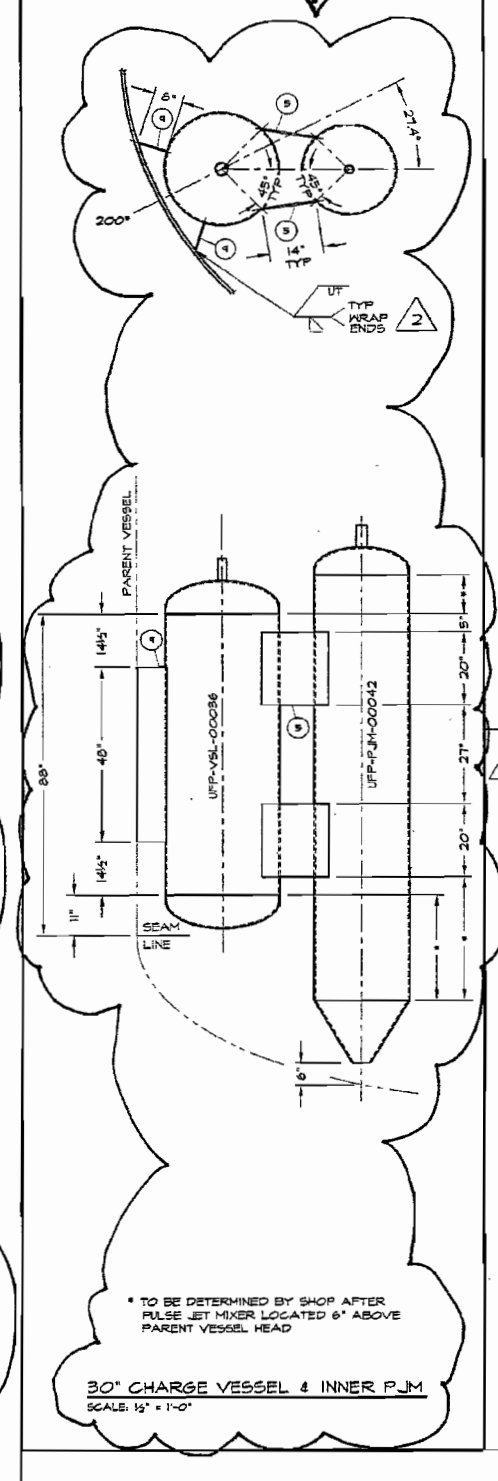

* TO BE DETERMINED BY SHOP AFTER PULSE JET MIXER LOCATED 6" ABOVE PARENT VESSEL HEAD

30" CHARGE VESSEL & INNER PJM
SCALE: ½" = 1'-0"

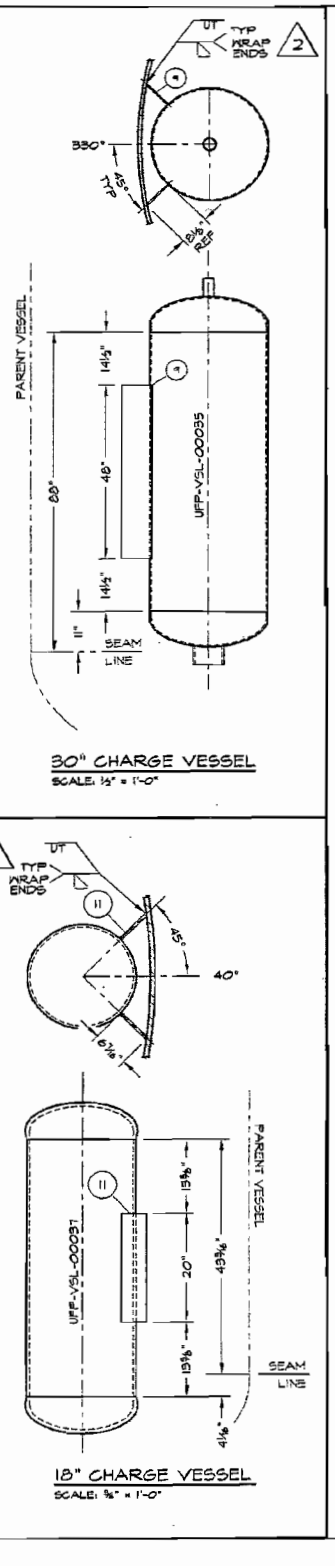

30" CHARGE VESSEL
SCALE: ½" = 1'-0"

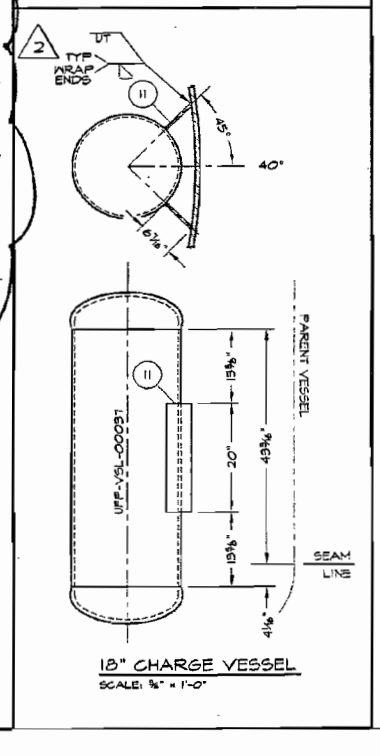

18" CHARGE VESSEL
SCALE: ⅜" = 1'-0"

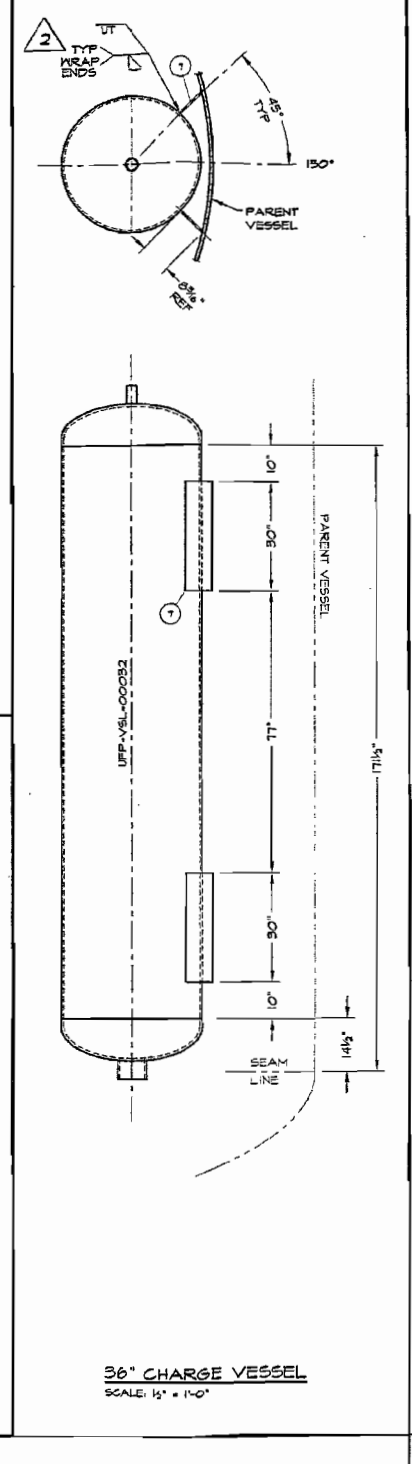

36" CHARGE VESSEL
SCALE: ½" = 1'-0"

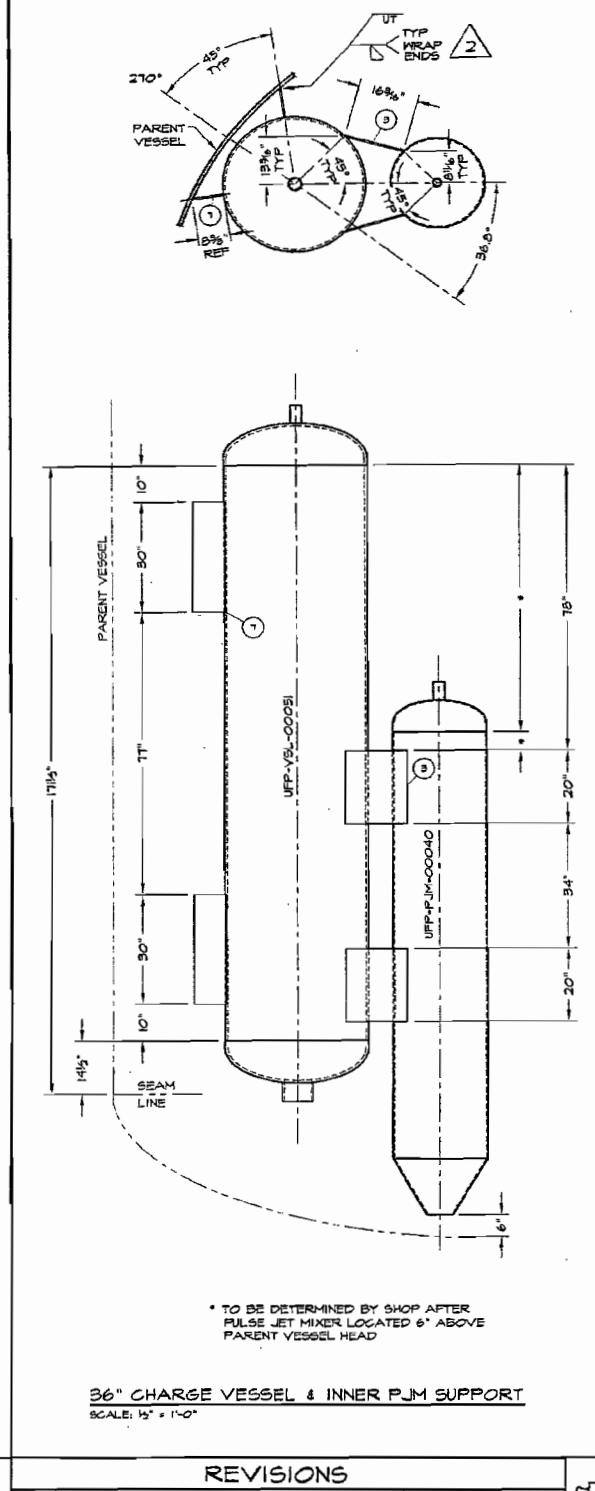

* TO BE DETERMINED BY SHOP AFTER PULSE JET MIXER LOCATED 6" ABOVE PARENT VESSEL HEAD

36" CHARGE VESSEL & INNER PJM SUPPORT
SCALE: ½" = 1'-0"

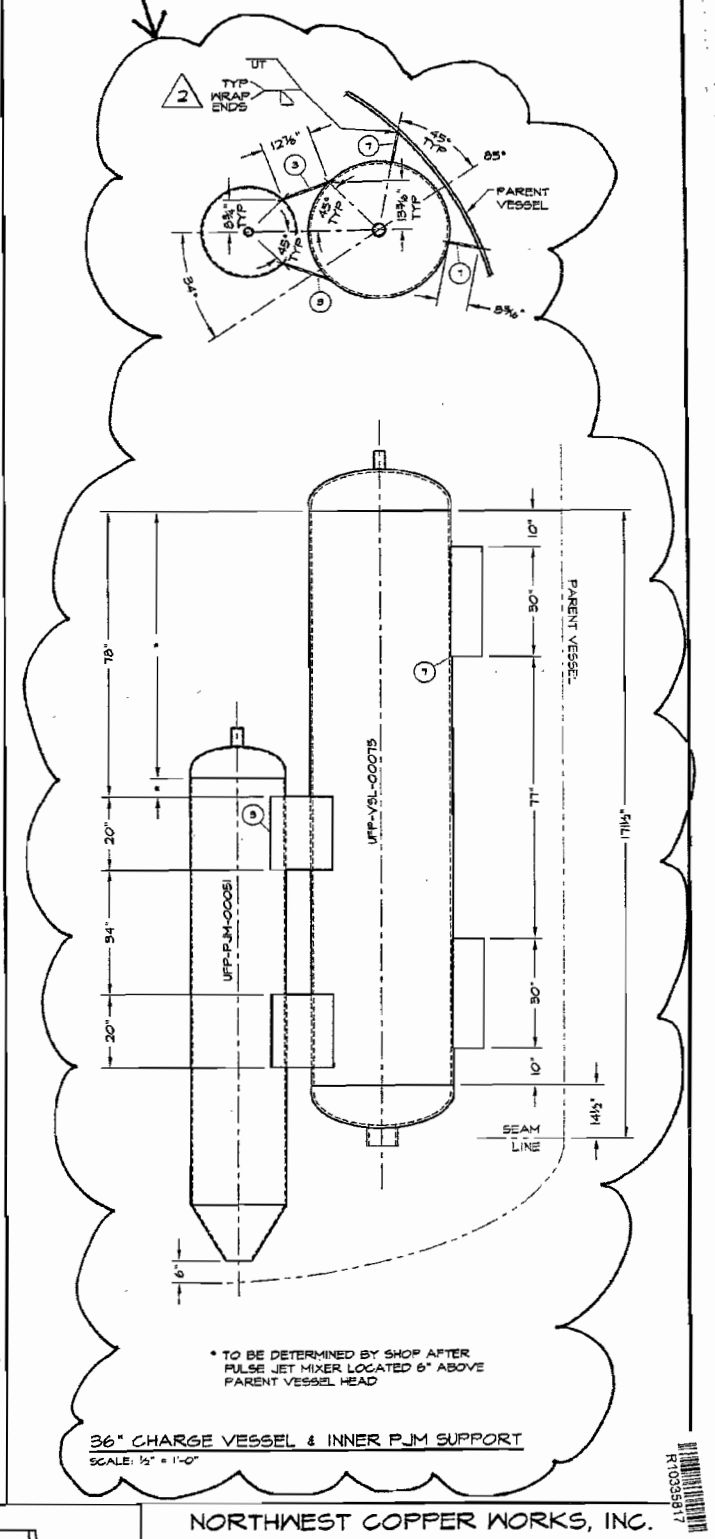

* TO BE DETERMINED BY SHOP AFTER PULSE JET MIXER LOCATED 6" ABOVE PARENT VESSEL HEAD

36" CHARGE VESSEL & INNER PJM SUPPORT
SCALE: ½" = 1'-0"

REVISIONS

NO	DESCRIPTION	REV BY	APP'D BY	DATE
2	REVISED PER ENGINEERING CHANGES	SVT	MDH	08/27/04
1	REVISED PER CUSTOMER COMMENTS	MJV	MDH	09/09/08

NORTHWEST COPPER WORKS, INC.
1303 N. RIVER STREET • PORTLAND, OREGON • 97227

180" I.D. ULTRAFILTER PERMEATE VESSEL INTERNAL SUPPORT

BECHTEL NATIONAL INC.
3000 George Washington Way
Richland, Washington 99352

EQUIP. NO. UFP-VSL-000625
P.O. NO. 24590-QL-POD-MVAO-00001 REV 0

SCALE	AS NOTED	JOB NO. 3006F	DWG. NO. D-3006F	REV 2
DATE	08/06/03	CHK'D. BY MDH		
DWN. BY	MDH	APP'D. BY MJV	SHT. NO. 2 OF 2	

TYPO, CHANGE TO POD BY RPP-WTP

BECHTEL DOC. No. 24590-QL-POS-MVAO-00001-03-43 REV. 00B

POD

F:\Swap\ACAD\03\P3006F-2.dwg, 7/16/2004 9:43:57 AM

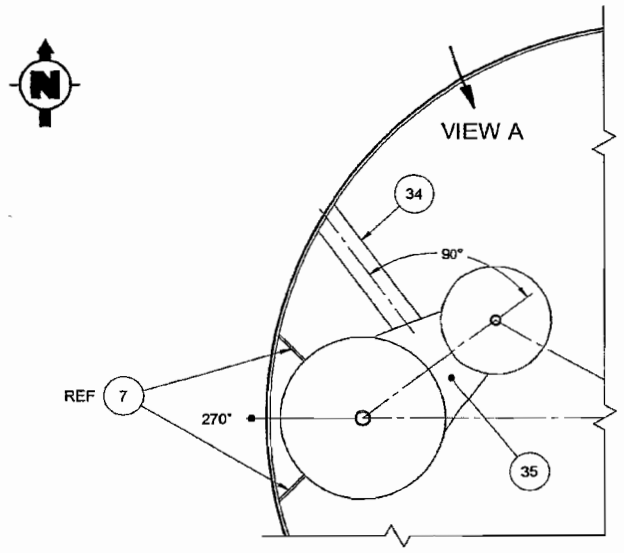

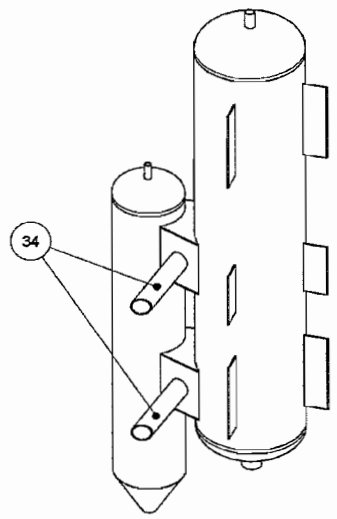

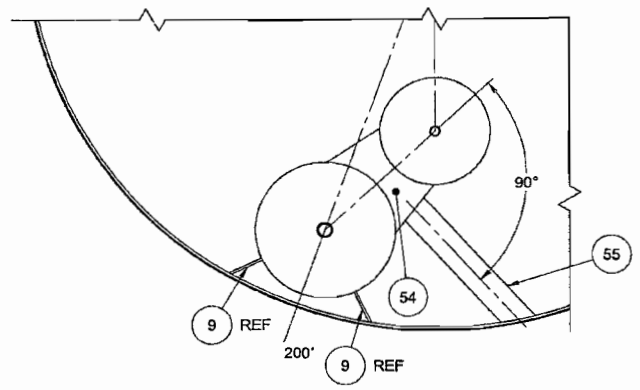

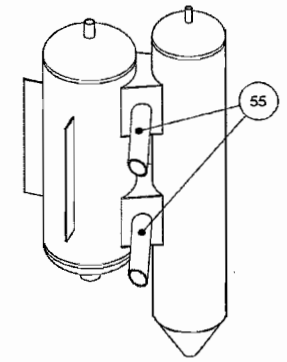

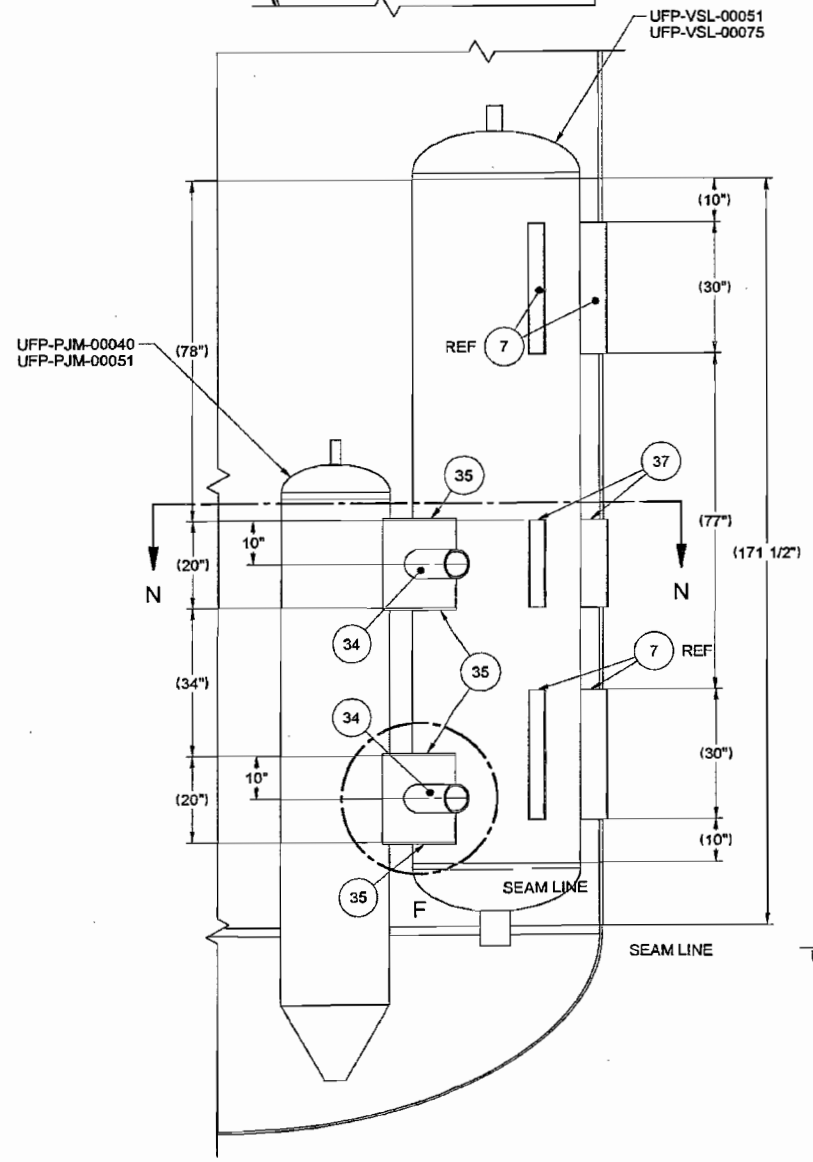

VIEW A
36" CHARGE VESSEL & INNER PJM SUPPORT
SCALE: 1/20
SEE DWG 24590-QL-POD-MVA0-00001-03-42
FOR REFERENCE BOM ITEMS

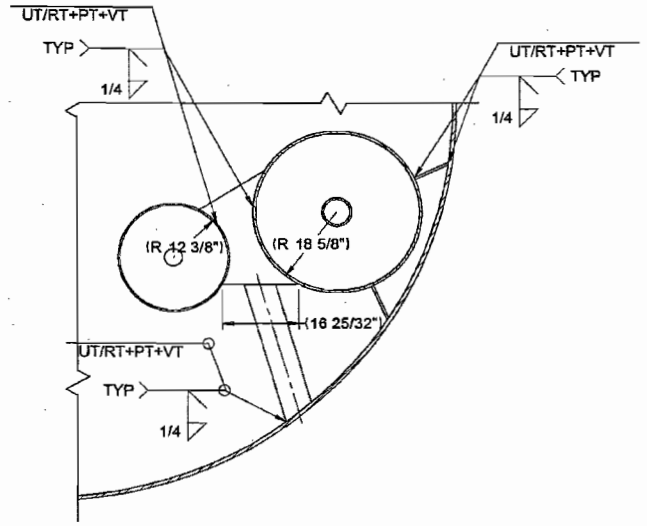

SECTION N-N
SCALE: 1/20

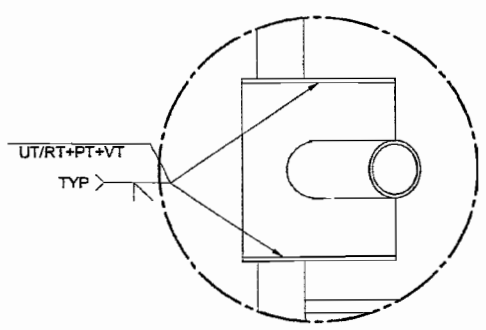

35 DETAIL F
SCALE: 1/10

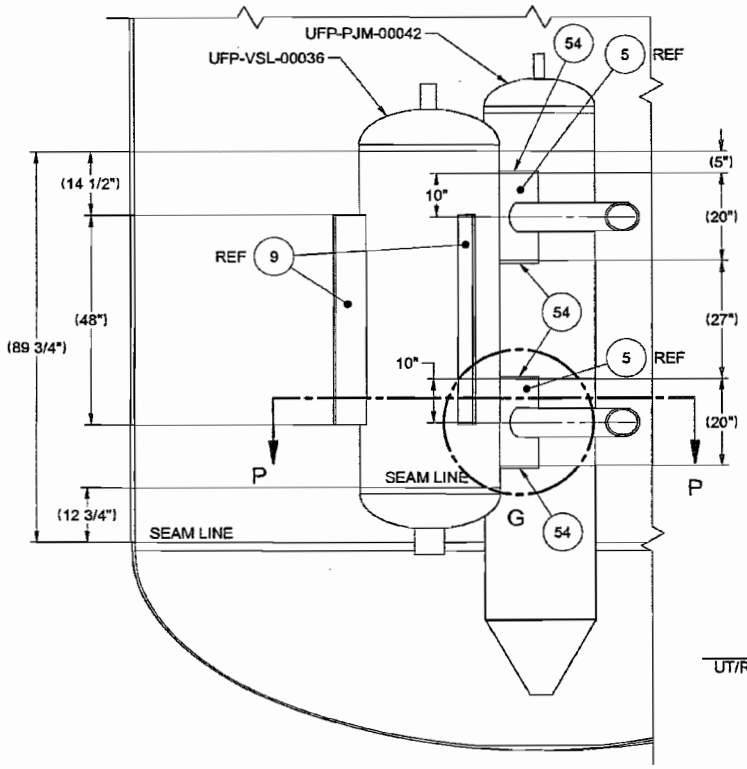

30" CHARGE VESSEL & INNER PJM SUPPORT
SCALE: 1/20
SEE DWG 24590-QL-POD-MVA0-00001-03-42
FOR REFERENCE BOM ITEMS

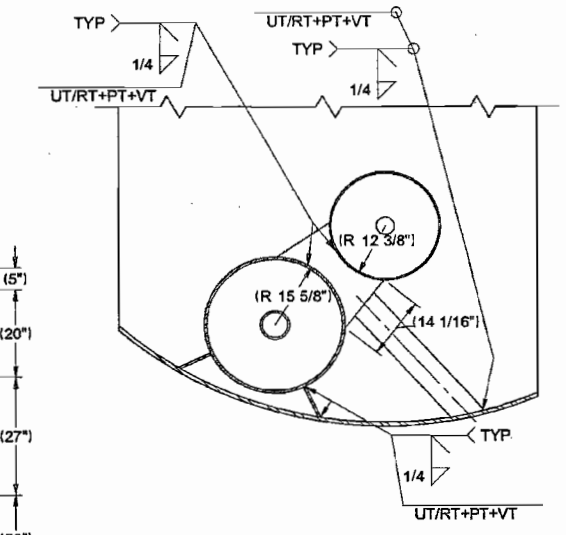

SECTION P-P
SCALE: 1/20

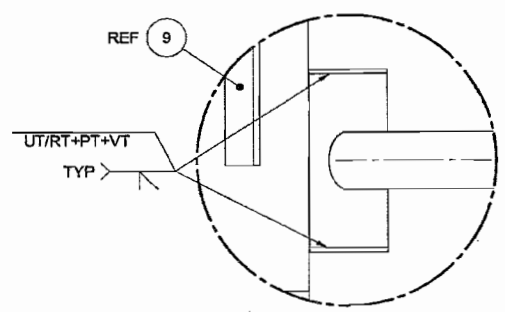

54 DETAIL G
SCALE: 1/10

Some information on all page(s) may appear to be illegible, however, the information necessary for assuring adequate design is legible.

P:\Swap\ACAD\03\D3006-7 prelim.dwg, 6/20/2005 4:12:55 PM

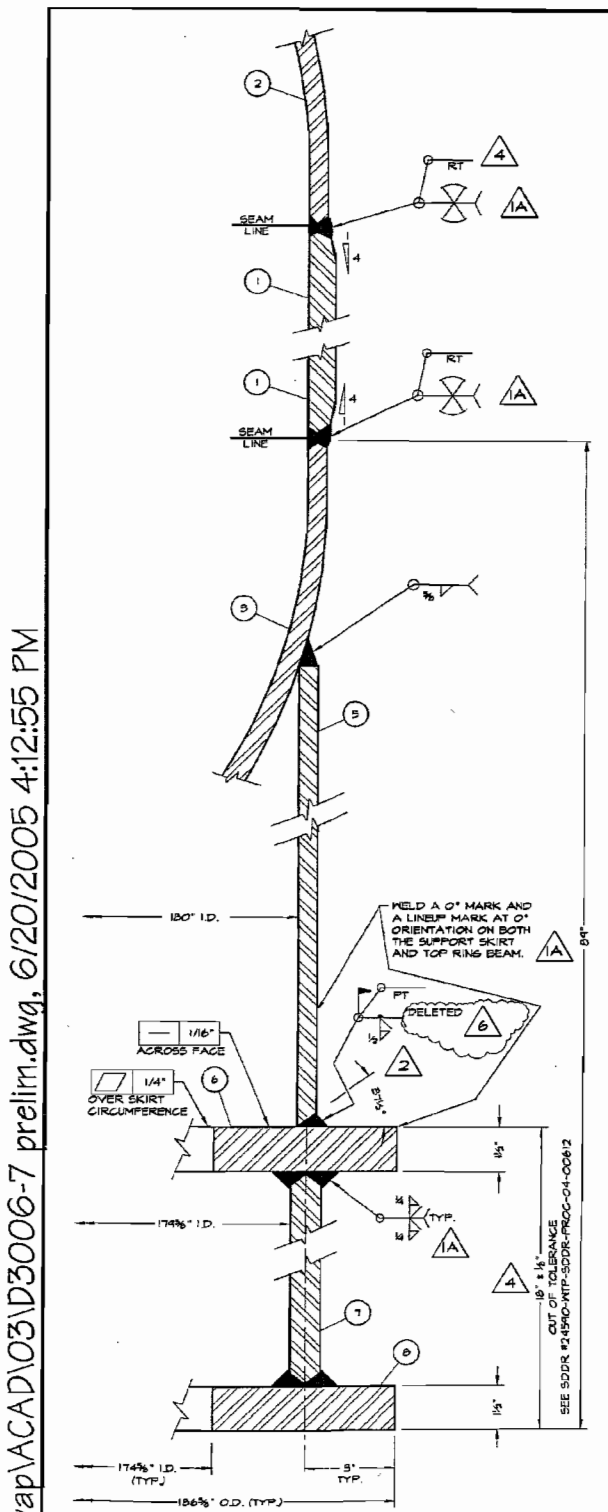

VESSEL SKIRT AND CROSS-SECTION
SCALE: 3/8" = 1"

ULTRASONICALLY EXAMINE 100% OF AREA UNDERNEATH AND 5" BEYOND PERIMETER OF TAILING LUG GUSSET TO HEAD FILLET WELD.
EXAMINE 100% OF TAILING LUG GUSSET TO HEAD FILLET WELD.
LIFTING LUG AND DOUBLER TO MATCH CONTOUR OF TANK

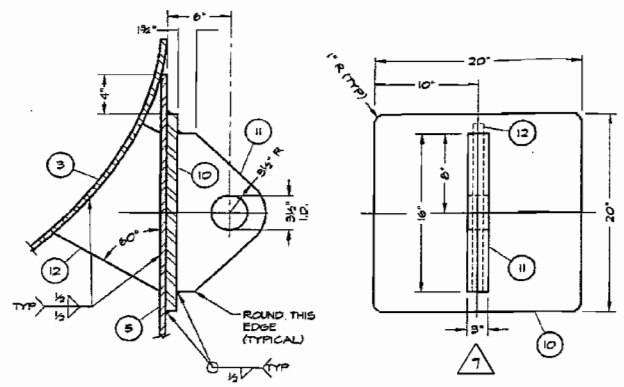

TAILING LUG DETAIL
SCALE: ½" = 1"

ULTRASONICALLY EXAMINE 100% OF AREA UNDERNEATH AND 5" BEYOND PERIMETER OF REINFORCEMENT FILLET WELD
EXAMINE 100% OF REINFORCEMENT FILLET WELD.

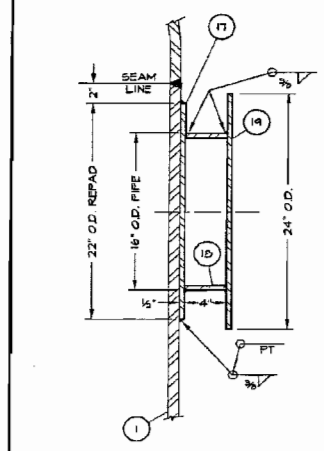

1A LIFTING TRUNNION DETAIL
SCALE: ½" = 1"

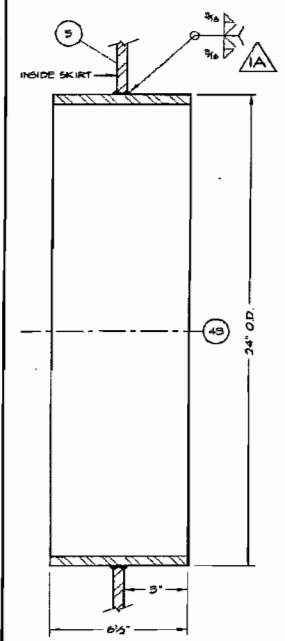

24" SKIRT ACCESS DETAIL
SCALE: ½" = 1" / (2) REQ'D
45

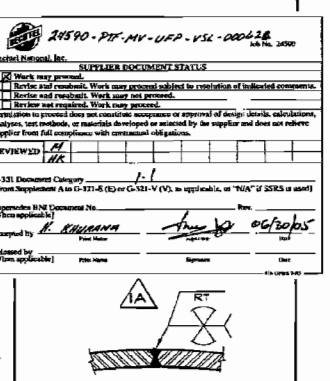

TYP. SHELL LONG. WELD
SCALE: ½" = 1"

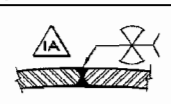

TYP. SKIRT/RING BEAM LONG. WELD
NO SCALE

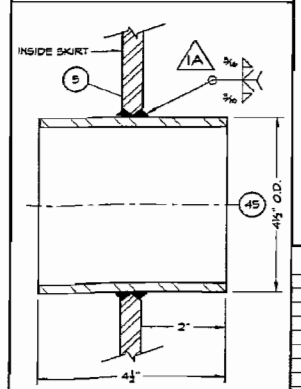

4" SKIRT VENT DETAIL
SCALE: ½" = 1" / (4) REQ'D
45

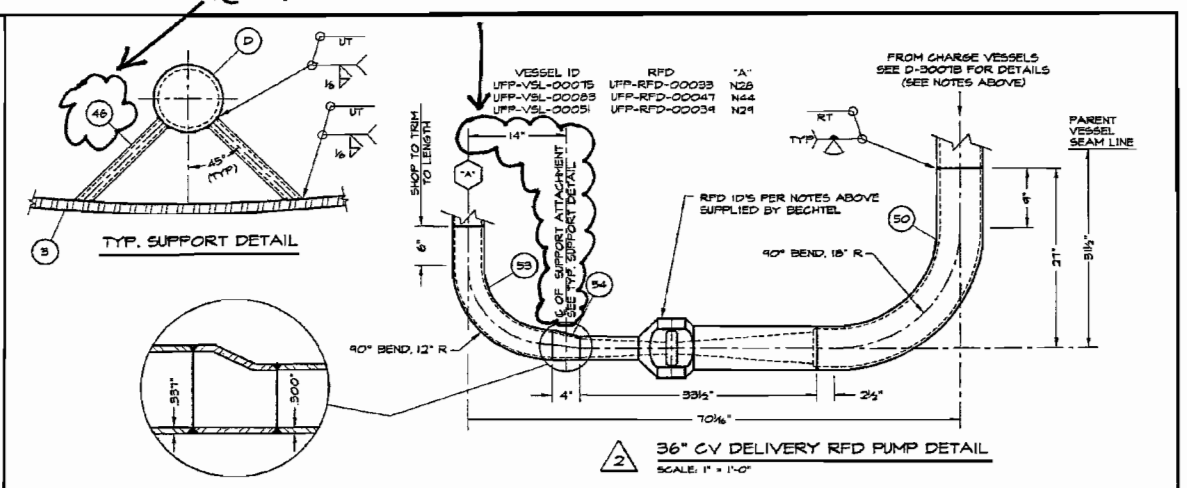

2 36" CV DELIVERY RFD PUMP DETAIL
SCALE: 1" = 1'-0"

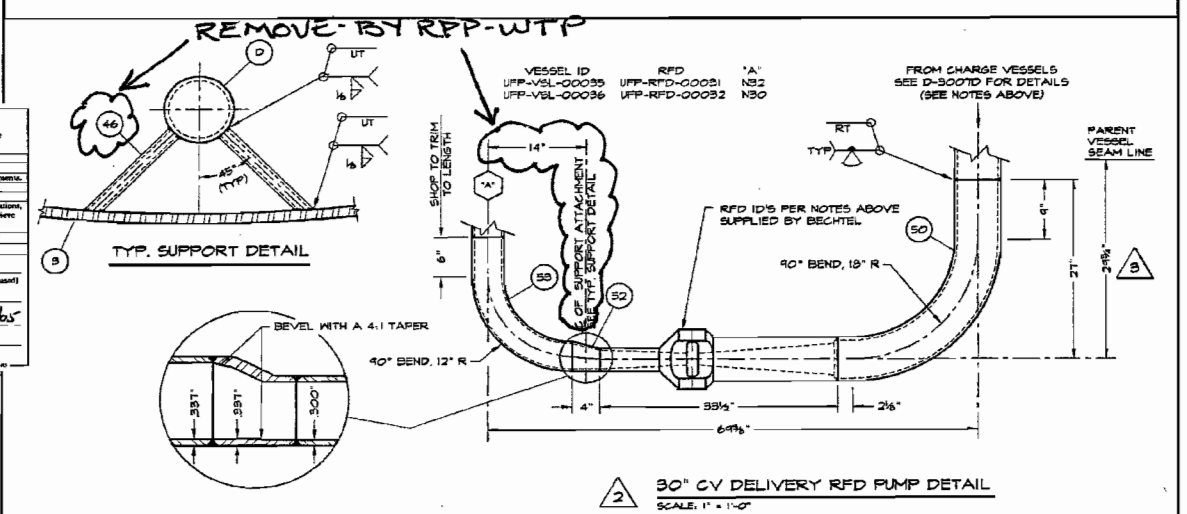

2 30" CV DELIVERY RFD PUMP DETAIL
SCALE: 1" = 1'-0"

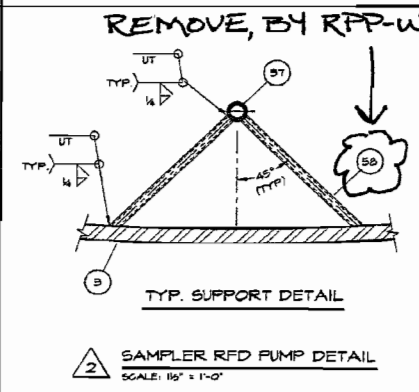

TYP. SUPPORT DETAIL

2 SAMPLER RFD PUMP DETAIL
SCALE: 1½" = 1'-0"

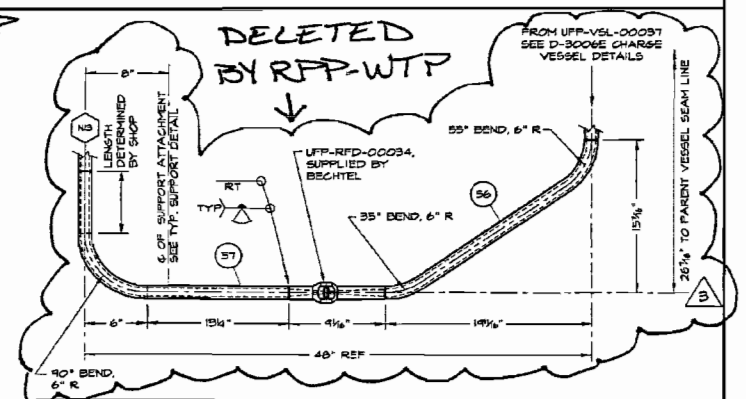

REVISIONS				
7	UPDATED TAILING LUG DETAIL	RNB	MJV	06/20/05
6	DELETED FIELD WELD PROCEDURE DESIGNATION	RNB	MJV	05/30/05
5	NO CHANGES	SHT	MJV	12/06/04
4	REVISED PER CUSTOMER COMMENTS AND ENGINEERING CHANGES	SHT	MJV	11/05/04
3	REVISED PER CUSTOMER COMMENTS AND ENGINEERING CHANGES	SHT	MJV	08/07/04
2	REVISED PER CUSTOMER COMMENTS AND ENGINEERING CHANGES	MDH	MJV	04/08/03
1A	REVISED PER CUSTOMER COMMENTS AND ENGINEERING CHANGES	MDH	MJV	07/18/03
1	DRAWING ADDED	MJV	MDH	04/28/03
NO	DESCRIPTION	REV BY	APD BY	DATE

NORTHWEST COPPER WORKS, INC.
1303 N. RIVER STREET • PORTLAND, OREGON • 97227

180" I.D. ULTRAFILTER PERMEATE COLLECTION VESSEL DETAILS

BECHTEL NATIONAL INC. 3000 George Washington Way Richland, Washington 99352		EQUIP. NO.	UFP-VSL-00062B
		P.O. NO.	24590-QL-POP-MVA0-00003 REV 0
SCALE AS NOTED	JOB NO. 3006	DWG. NO.	D-3006 REV 7
DATE 04/28/03	CHKD. BY MJV		
DWN. BY MDH	APPD. BY MDH	SHT. NO.	4 OF 8

REF: DWG 24590-PTF-MV-UFP-00006 REV 0
BECHTEL DOC. 24590-QL-POD-MVA0-00001-03-30 REV. 00

DELETED BY RPP-WTP

R10529201

BILL OF MATERIALS					
MK	THICK/SIZE	MATERIAL	HEAT NO	DESCRIPTION	QTY
59	1" Ø	SA 479 TYPE 316		BAR	2
60	1" SCHED 160S	SA 312 TP 316/316L 0.030% MAX C		SMLS PIPE, OFFSET	1

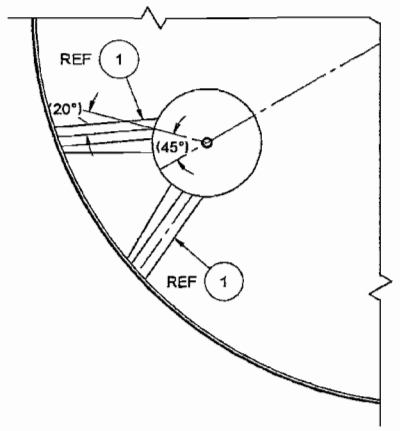

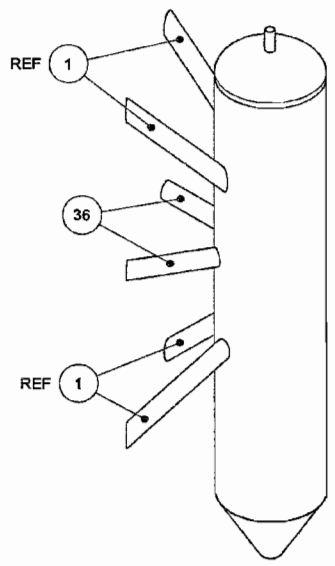

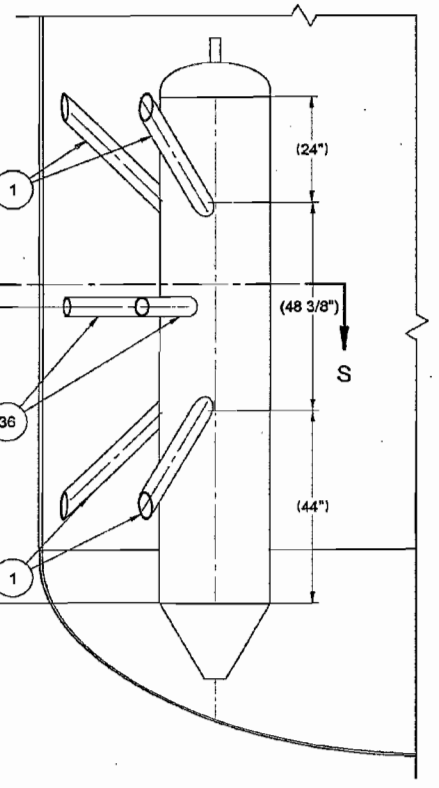

TYPICAL OUTER PJM SUPPORT
SCALE: 1/20
SEE DWG 24590-QL-POD-MVA0-00001-03-42
FOR REFERENCE BOM ITEMS

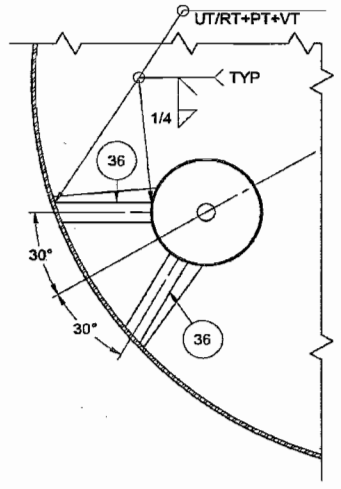

SECTION S-S
SCALE: 1/20

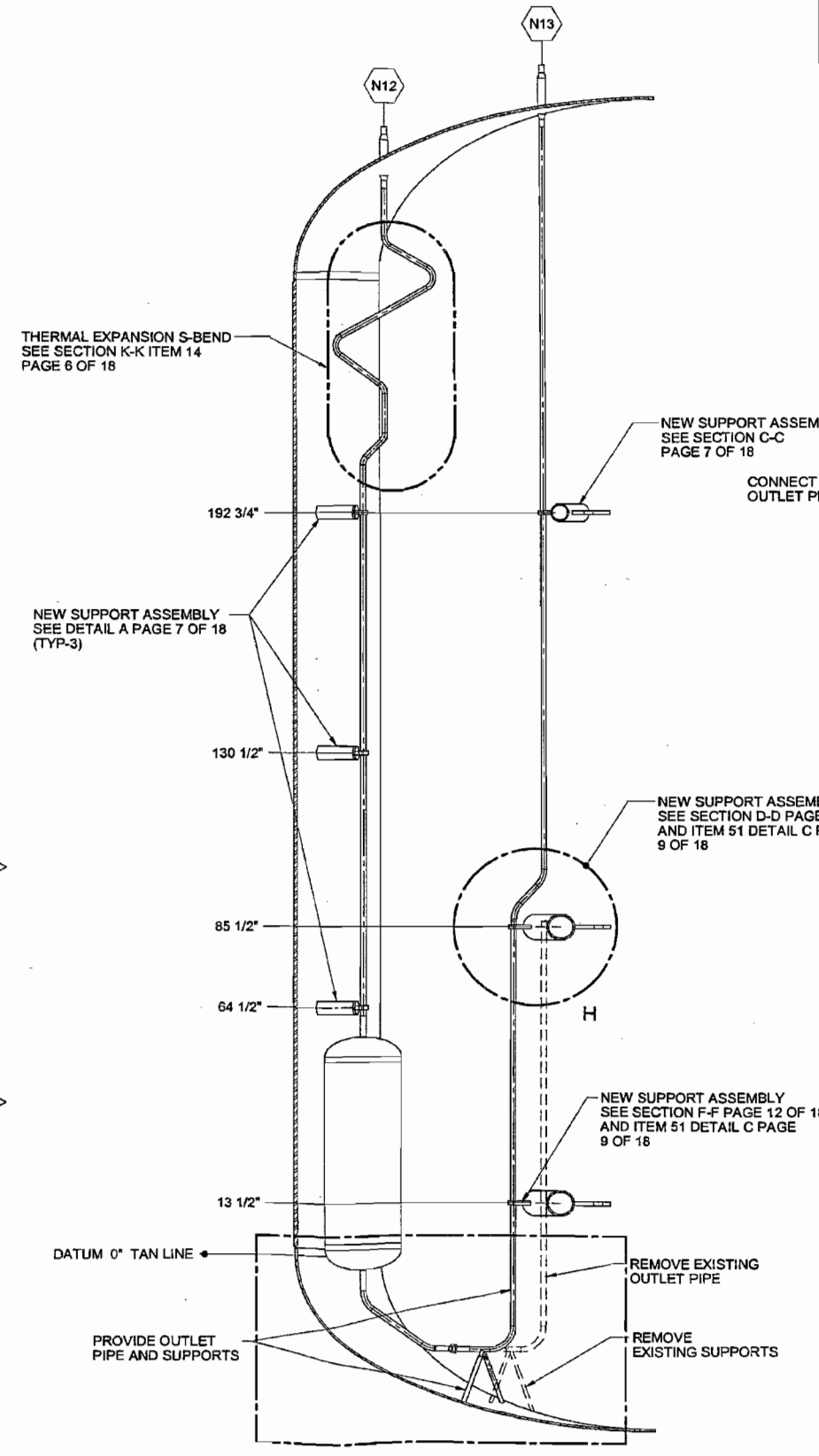

SAMPLER PUMP RFD ASSEMBLY
SCALE: 1/20
SEE DWG 24590-QL-POD-MVA0-00001-03-04
FOR REFERENCE BOM ITEMS

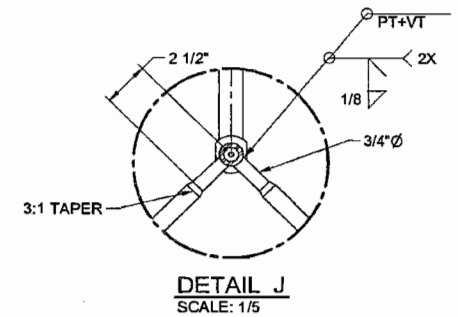

DETAIL J
SCALE: 1/5

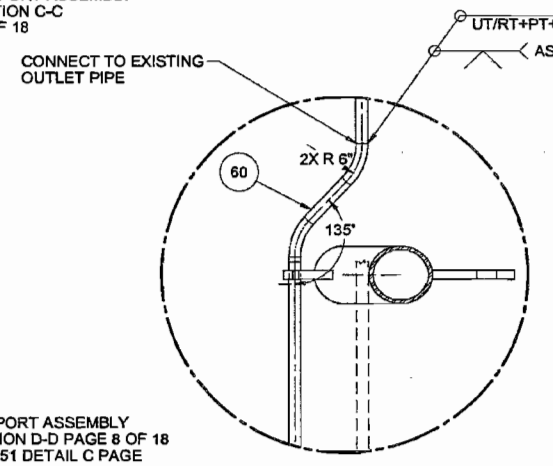

DETAIL H
SCALE: 1/10

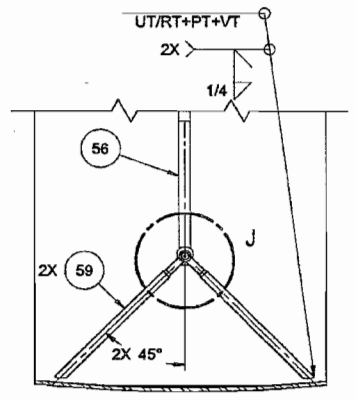

SECTION R-R
SCALE: 1/10

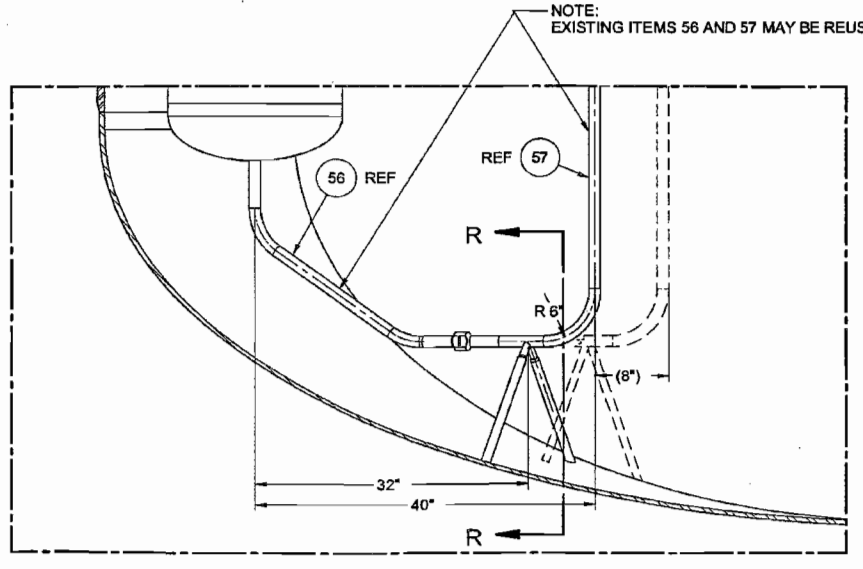

SAMPLER PUMP RFD DETAIL
SCALE: 1/10

FORM D_MASTER 03/2003
SCREENING IS REQUIRED FOR DRAWING TYPES IDENTIFIED IN 24590-WTP-GPP-SRED-002
'D' SIZE - 34x22
COMPUTER GENERATED - MANUAL DESIGN CHANGES NOT PERMITTED

Some information on all page(s) may appear to be illegible, however, the information necessary for assuring adequate design is legible.

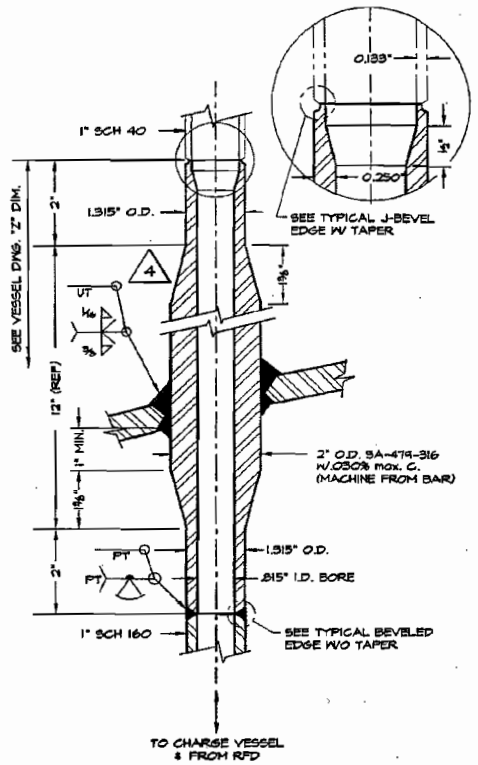

2" MACHINED BAR NOZZLE TO INTERNALS
SCALE: ½" = 1"
N12 N15 2

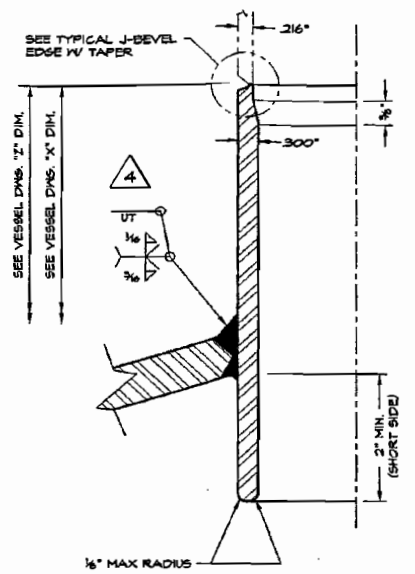

3" SCH 80 NOZZLE W/ INT. PROJECTION
SCALE: ¾" = 1"
N40 2

24590-PTF-MV-UFP-VSL-000628
Bechtel National, Inc. Job No. 24590
SUPPLIER DOCUMENT STATUS
1. [X] Work may proceed.
2. [ ] Revise and resubmit. Work may proceed subject to resolution of indicated comments.
3. [ ] Revise and resubmit. Work may not proceed.
4. [ ] Review not required. Work may proceed.
Permission to proceed does not constitute acceptance or approval of design details, calculations, analyses, test methods, or materials developed or selected by the supplier and does not relieve supplier from full compliance with contractual obligations.
REVIEWED M WTP
G-123 Document Category 1.3 (From Supplement A to G-321-E (E) or G-321-V (V), as applicable, or "N/A" if 3335 is used)
Supersedes BNI Document No. (When applicable) Rev:
Accepted by: H. MURATA 01/13/05
Reviewed by (When applicable) Print Name Signature Date

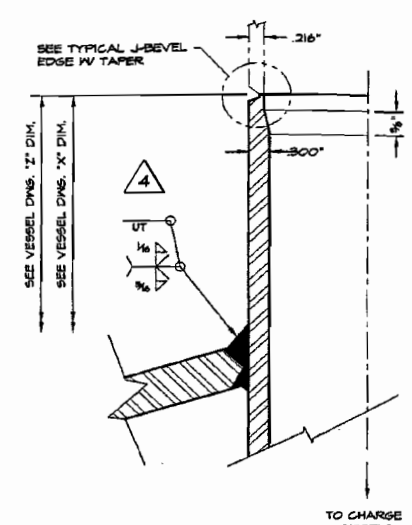

3" SCH 80 INLET TO INTERNALS
SCALE: ¾" = 1"
N23 N24 N25 N26 N45

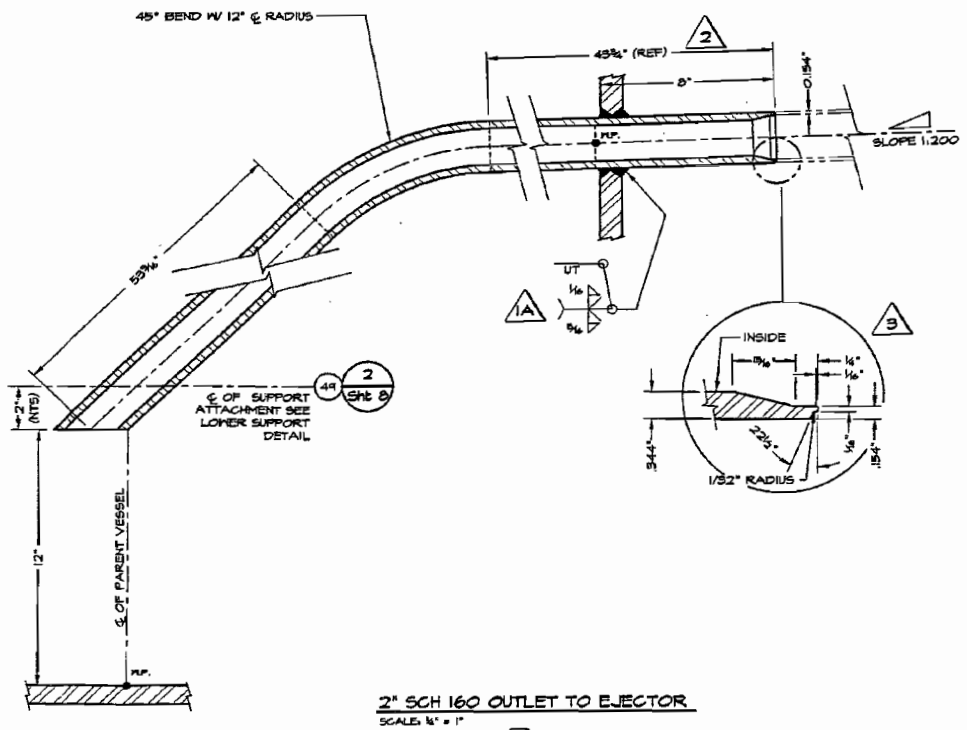

2" SCH 160 OUTLET TO EJECTOR
SCALE: ½" = 1"
N17

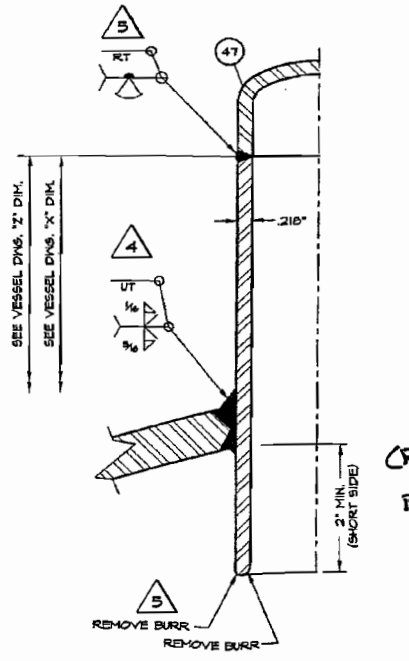

2" SCH 80 CAPPED NOZZLE W/ INT. PROJECTION
SCALE: ¾" = 1"
N38 2

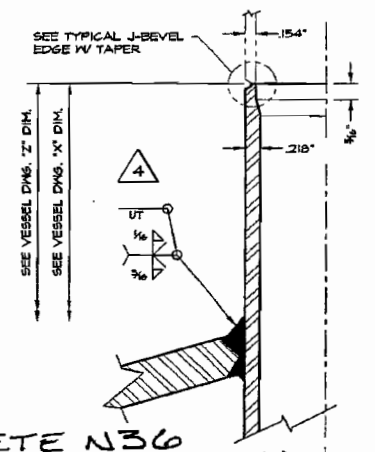

DELETE N36 AND REPLACE WITH TYPICAL SCH 160 NOZZLE DETAIL (REF SECTION Q-Q) BY RPP-WTP →

2" SCH 80 INLET TO INTERNALS
SCALE: ¾" = 1"
N34 N35 N36

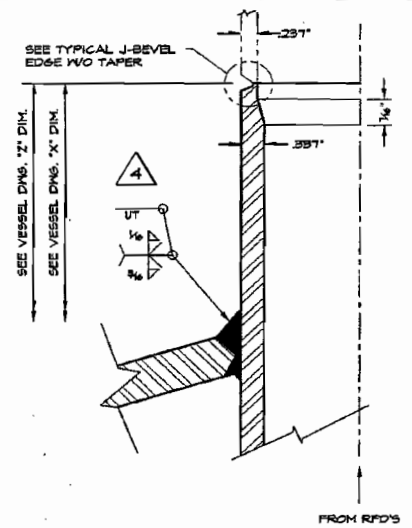

4" SCH 80 OUTLET FROM INTERNALS
SCALE: ¾" = 1"
N28 N29 N30 N32 N44

R1D443786

REVISIONS

NO	DESCRIPTION	REV BY	APP'D BY	DATE
5	NO CHANGES	SMT	MJV	12/06/04
4	REVISED PER CUSTOMER COMMENTS AND ENGINEERING CHANGES	SMT	MJV	11/05/04
3	REVISED PER CUSTOMER COMMENTS AND ENGINEERING CHANGES	SMT	MJV	06/07/04
2	REVISED PER CUSTOMER COMMENTS AND ENGINEERING CHANGES	MDH	MJV	04/03/03
1A	REVISED PER CUSTOMER COMMENTS AND ENGINEERING CHANGES	MDH	MJV	07/16/03
1	DRAWING ADDED	MJV	MDH	04/23/03

NORTHWEST COPPER WORKS, INC.
1303 N. RIVER STREET • PORTLAND, OREGON • 97227

180" I.D. ULTRAFILTER PERMEATE COLLECTION VESSEL NOZZLE DETAILS (2 OF 3)

BECHTEL NATIONAL INC. 3000 George Washington Way Richland, Washington 99352		EQUIP. NO.	UFP-VSL-000628
		P.O. NO.	24590-QL-POD-MVAO-00008 REV 0
SCALE AS NOTED	JOB NO. 3006	DWG. NO.	D-3006 REV 5
DATE 04/28/03	CHK'D. BY MJV		
DWN. BY MDH	APP'D. BY MDH	SHT. NO.	7 OF 8

REF. DWG 24590-PTF-MV-UFP-00006 REV 0 12/9/04
BECHTEL DOC. 24590-QL-POD-MVAO-00001-03-35 REV. 00015
DELETED BY RPP-WTP

P:\Swap\ACAD\03\03006-5 Mon Dec 06 09:42:54 2004

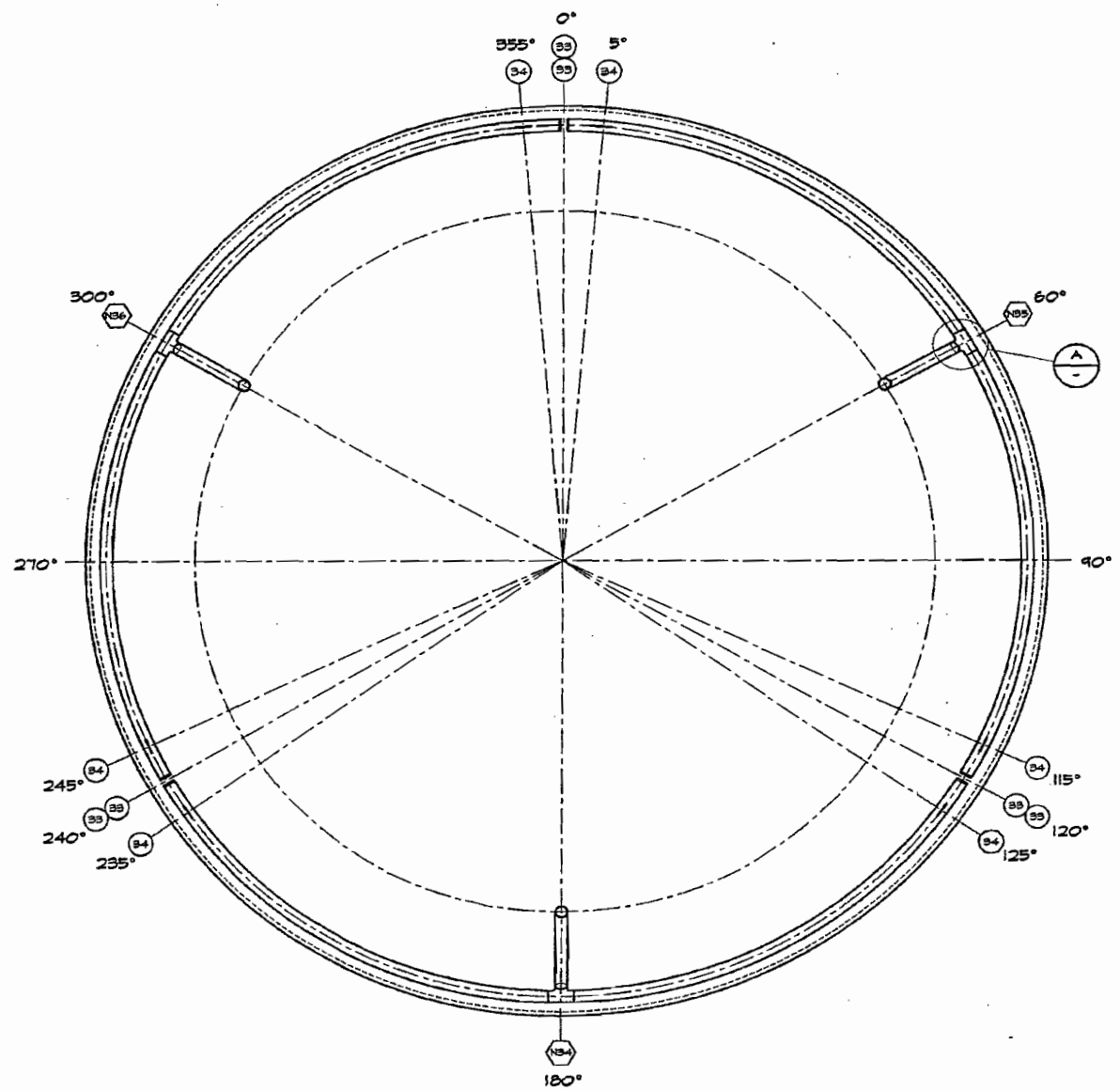

WASH RING ORIENTATION
SCALE: ⅜" = 1'-0"

DELETE N36 AND ADD SECTION Q-Q BY RPP-WTP

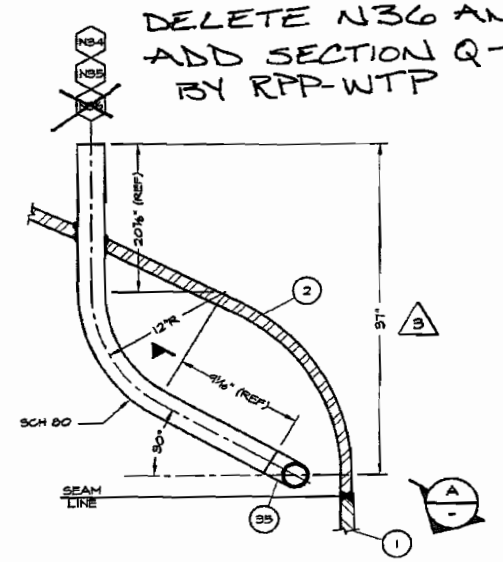

1A A WASH RING TEE
SCALE: ½" = 1"

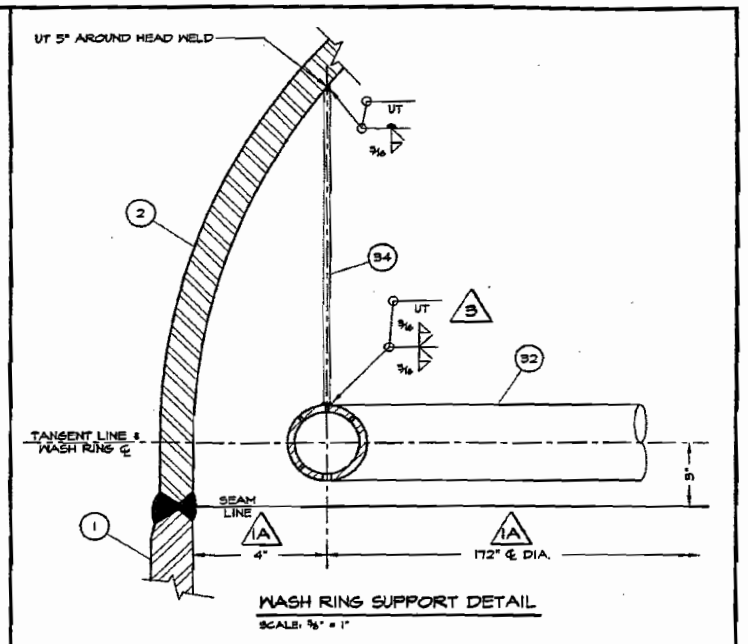

WASH RING SUPPORT DETAIL
SCALE: ⅜" = 1"

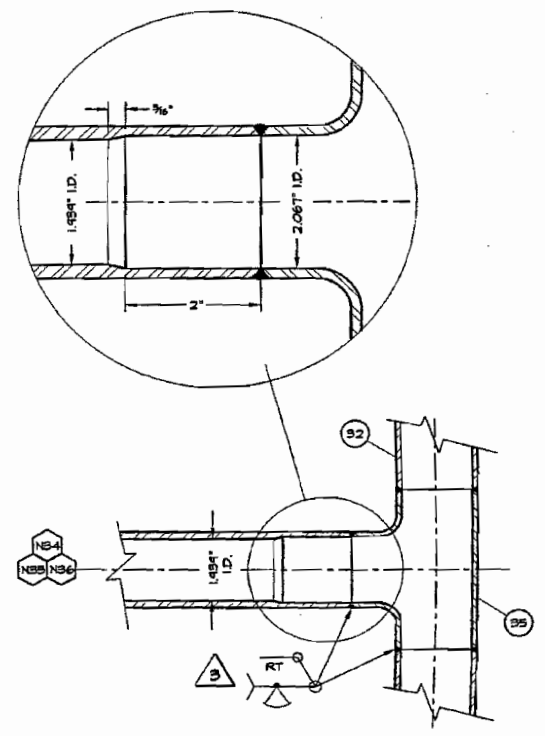

WASH RING TEE SECTION A-A
SCALE: ⅜" = 1"

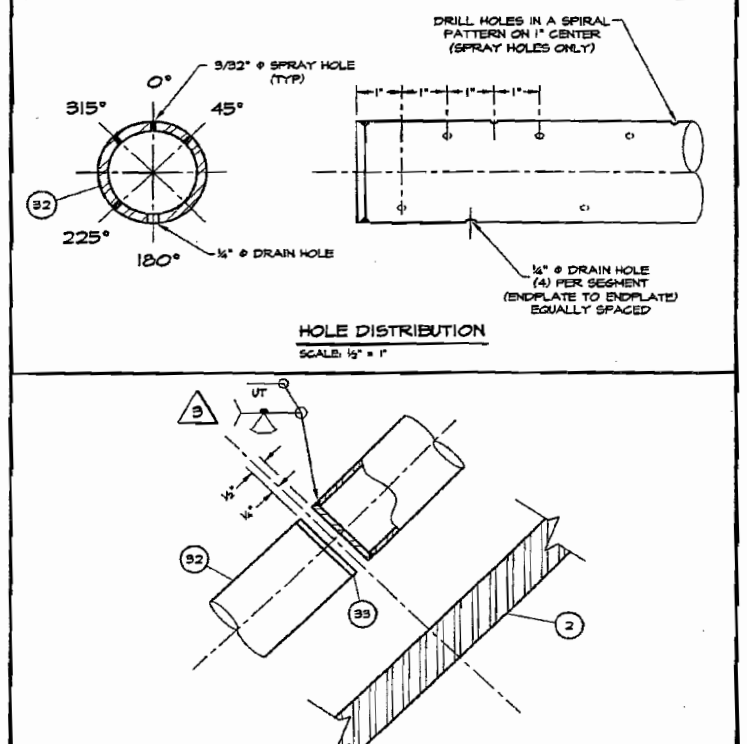

HOLE DISTRIBUTION
SCALE: ½" = 1"

END PLATE DETAIL
SCALE: ⅜" = 1"

Some information on all page(s) may appear to be illegible, however, the information necessary for assuring adequate design is legible.

24590-PTF-MV-UFP-VSL-00062 B
Job No. 24590
Bechtel National, Inc.
SUPPLIER DOCUMENT STATUS
1. ☒ Work may proceed.
2. ☐ Revise and resubmit. Work may proceed subject to resolution of indicated comments.
3. ☐ Revise and resubmit. Work may not proceed.
4. ☐ Review not required. Work may proceed.
Permission to proceed does not constitute acceptance or approval of design details, calculations, analyses, test methods, or materials developed or selected by the supplier and does not relieve supplier from full compliance with contractual obligations.
REVIEWED: MV NWC
G-321 Document Category: 13
(From Supplement A to G-321-E (E) or G-321-V (V), as applicable, or "N/A" if 5333 is used)
Supersedes 5333 Document No.: Rev.
(When applicable)
Accepted by: H. KHURANA 01/13/05
Released by: (When applicable)

REVISIONS

NO	DESCRIPTION	REV BY	APP'D BY	DATE
5	NO CHANGES	SMT	MJV	12/06/04
4	NO CHANGES	SMT	MJV	11/05/04
3	REVISED PER CUSTOMER COMMENTS AND ENGINEERING CHANGES	SMT	MJV	08/07/04
2	REVISED PER CUSTOMER COMMENTS AND ENGINEERING CHANGES	MDH	MJV	04/05/03
1A	REVISED PER CUSTOMER COMMENTS AND ENGINEERING CHANGES	MDH	MJV	07/16/03
1	DRAWING ADDED	MJV	MDH	04/28/03

NORTHWEST COPPER WORKS, INC.
1303 N. RIVER STREET • PORTLAND, OREGON • 97227

180" I.D. ULTRAFILTER PERMEATE COLLECTION VESSEL WASH RING DETAILS

BECHTEL NATIONAL INC. 3000 George Washington Way Richland, Washington 99352		EQUIP. NO.	UFP-VSL-00062B
		P.O. NO.	24590-GL-POD-MVA0-00003 REV 0
SCALE AS NOTED	JOB NO. 3006	DWG. NO.	D-3006 REV 5
DATE 04/28/03	CHKD. BY MJV		
DWN. BY MDH	APPD. BY MDH	SHT. NO.	5 OF 8

REF. DWG 24590 PTF MV UFP 00006 REV 0
BECHTEL DOC. 24590-GL-POD-MVA0-00001-03-31 REV. 00PE

P:\Swap\ACAD\03\03006-5 Mon Dec 06 09:43:19 2004