R11307228

Drawing Change Notice

CHANGE DOCUMENT NO.
24590-PTF-VDCN-MS-10-00009

JOB NO.	TITLE FOR CHANGE NOTICE
24590	UFP-VSL-00062C Redesign

ISSUED BY
RPP-WTP PDC

DESIGN DOCUMENT NUMBER	REV	DESIGN DOCUMENT NUMBER	REV
24590-QL-POD-MVA0-00001-03-07	F	24590-QL-POD-MVA0-00001-03-08	F
24590-QL-POD-MVA0-00001-03-09	F	24590-QL-POD-MVA0-00001-03-10	G
24590-QL-POD-MVA0-00001-03-11	E	24590-QL-POD-MVA0-00001-03-12	E
24590-QL-POD-MVA0-00001-03-13	E	24590-QL-POD-MVA0-00001-03-14	E
24590-QL-POD-MVA0-00001-03-44	B	24590-QL-POD-MVA0-00001-03-45	B

PART OF DESIGN CHANGE PACKAGE (DCP)? ☐ Yes ☒ No DCP No.: N/A Rev:

JUSTIFICATION FOR CHANGE

Based on the re-analysis of UFP-VSL-00062C, per calculation 24590-PTF-MVC-UFP-00023, for revised seismic conditions and design evolution, required a redesign of the vessel.

CAUSE CODE

01 and 23

Supersedes Change Document ☒ Yes ☐ No Document # 24590-PTF-VDCN-MS-10-00002
24590-PTF-VDCN-MS-10-00004

ECN Needed ☐ Yes ☒ No

REQUIREMENTS REVIEW

Client Approval Required ☐ Yes ☒ No Interface Resolution Required * ☐ Yes ☒ No

Address any "yes" answers in the description

DESCRIPTION OF CHANGE

NOTE: Components removed or deleted per this VDCN are to be removed from the actual vessel unless otherwise noted.

1. **Affected Document: 24590-QL-POD-MVA0-00001-03-07 (see Attachment 1, page 1 of this VDCN).**

   a.) Design Conditions block: Change 'Design Pressure' to 15 / -2.0

   b.) Design Conditions block: Change temperature to 230°F.

   c.) Bill of Materials block, change/delete as follows:

   Line item 38: Delete

   Line item 46: Delete

   Line item 48: Delete

   Line item 49: Delete (As required)

   Line item 55: Delete

   Line item 58: Delete

   d.) Bill of Materials block, add item 59 and 60 shown on Attachment 1, page 16 of this VDCN.

   e.) Estimated Weight, (in LBS) block, change as follows:

   OPERATING - 512,285 lbs

   FULL WATER - 401,100 lbs

   EMPTY - 103,000 lbs

   f.) General Notes and Special Requirements: Delete Note 8 and replace with the following text:

   Fabrication tolerances for field modifications shall be per 24590-WTP-MV-M59T-00001 (Pressure Vessel Tolerances Standard Details) and PFI Standard ES-24 (Pipe Bending Methods, Tolerances, Process and Material Requirement). For tolerances not specified by these standards, the following shall apply, unless otherwise noted:

Dimension	Tolerance
Linear < 12 inch	± 1/8 inch
Linear ≥ 12 inch	± 1/4 inch
Angular	± 2 degrees

Please note that source, special nuclear, and byproduct materials, as defined in the Atomic Energy Act of 1954 (AEA) are regulated at the U. S. Department of Energy (DOE) facilities exclusively by DOE acting pursuant to its AEA authority. DOE asserts that pursuant to AEA, it has sole and exclusive responsibility and authority to regulate source, special nuclear, and byproduct materials at DOE-owned nuclear facilities. Information contained herein on radionuclides is provided for process description purposes only.

Drawing Change Notice

CHANGE DOCUMENT NO.
24590-PTF-VDCN-MS-10-00009

JOB NO.	TITLE FOR CHANGE NOTICE
24590	UFP-VSL-00062C Redesign

DESCRIPTION OF CHANGE

g.) RT per ASME Section VIII Div. 1 Appendix 4: Item 3, delete second sentence "This does not include internal pipe supports and braces".

h.) Connection Schedule block: Change the 'NECK THK' to SCH 160 for the following nozzles:

N07

N10

N34

i.) Connection Schedule block: Change the 'NECK MATERIAL' to SA312 TP316/316L 0.030% MAX C for the following nozzles:

N07

N10

N34

j.) RT per ASME Section VIII Div.1 Appendix 4 block: Change Appendix 4 to read "UW-51".

k.) Under title block, delete BNI reference drawing entitled, "REF DWG 24590-PTF MV-UFP-00005 REV 0".

2. **Affected Document: 24590-QL-POD-MVA0-00001-03-08 (see Attachment 1, page 2 of this VDCN).**

a.) Vessel Elevation View:

(1.) Delete supports and associated part bubbles depicted on drawing.

(2.) Delete support dimensions depicted on drawing.

(3.) Under title block, delete BNI reference entitled, "REF DWG 24590-PTF MV-UFP-00005 REV 0".

3. **Affected Document: 24590-QL-POD-MVA0-00001-03-09 (see Attachment 1, page 3 of this VDCN).**

a.) Vessel Orientation: Delete supports as shown.

b.) Internal Pipe Brace Details: Remove items 38, 48 and 55. NOTE: Pipe Lugs are to remain in place.

c.) Internal Pipe Brace Details: Delete detail and remove components.

d.) Under title block, delete BNI reference drawing entitled, "REF DWG 24590-PTF MV-UFP-00005 REV 0".

4. **Affected Document: 24590-QL-POD-MVA0-00001-03-44 (see Attachment 1, page 4 of this VDCN).**

a.) Elevation View: Delete Elevation View and replace with NORTH ELEVATION VIEW shown on Attachment 1, page 5 of this VDCN.

b.) Internal Vessel Support Orientation: Remove view as this will be covered in Sections B-B, C-C, D-D, E-E, F-F, and G-G shown on Attachment 1, page 5 of this VDCN.

c.) Add BILL OF MATERIALS items 12 through 53 shown on Attachment 1, page 5 of this VDCN.

d.) Add SECTION B-B shown on Attachment 1, page 6 of this VDCN.

e.) Add SECTION J-J and item 12 THERMAL EXPANSION S-BEND shown on Attachment 1, page 6 of this VDCN.

f.) Add SECTION L-L and item 13 THERMAL EXPANSION S-BEND shown on Attachment 1, page 6 of this VDCN.

g.) Add SECTION K-K and item 14 THERMAL EXPANSION S-BEND shown on Attachment 1, page 6 of this VDCN.

h.) Shown on Attachment 1, page 7 of this VDCN, add the following:

(1.) SECTION C-C

(2.) DETAIL-B

(3.) Item 21 - GUIDE RING

(4.) Item 22 - GUIDE RING

(5.) Item 29 - GUIDE RING

(6.) Construction, NOTE 1

Drawing Change Notice

CHANGE DOCUMENT NO.
24590-PTF-VDCN-MS-10-00009

JOB NO.	TITLE FOR CHANGE NOTICE
24590	UFP-VSL-00062C Redesign

DESCRIPTION OF CHANGE

i.) Construction Notes block add the following numbered notes:

NOTE 2: WHERE PLATE MATERIAL IS SPECIFIED AS ASME SA240, ASME SA479 MATERIAL MAY BE SUBSTITUTED.

j.) Add SECTION D-D shown on Attachment 1, page 8 of this VDCN.

k.) Add SECTION E-E shown on Attachment 1, page 8 of this VDCN.

l.) Add Detail C shown on Attachment 1, page 9 of this VDCN.

m.) Add SECTION F-F shown on Attachment 1, page 12 of this VDCN.

n.) Add SECTION G-G shown on Attachment 1, page 12 of this VDCN.

5. **Affected Document: 24590-QL-POD-MVA0-00001-03-12 (see Attachment 1, page 10 of this VDCN).**

a.) Instrument Assy Detail: Remove support item 49 and replace with items 22, 40, and 41, shown by SECTION H-H and DETAIL-E, Attachment 1, page 12 of this VDCN.

b.) Thermowell Assembly: Remove support item 49 and replace with items 29, 38, and 39, shown by SECTION M-M and DETAIL-D, Attachment 1, page 12 of this VDCN.

c.) Under title block, delete BNI reference drawing entitled, "REF DWG 24590-PTF MV-UFP-00005 REV 0".

6. **Affected Document: 24590-QL-POD-MVA0-00001-03-14 (see Attachment 1, page 11 of this VDCN).**

a.) Typ Lower Support For Dip Tubes: Remove support item 49 for N05 and N06 only.
NOTE: This support detail is covered on Vendor drawing 24590-QL-POD-MVA0-00001-03-12 as reflected in item 5 of this VDCN.

b.) 2" SCH 80 NOZZLE W / INT PROJECTION: Delete N07 and N10 and replace with Typical 160 SCH Detail.

c.) Under title block, delete BNI reference drawing entitled, "REF DWG 24590-PTF MV-UFP-00005 REV 0".

7. **Affected Document: 24590-QL-POD-MVA0-00001-03-45 (see Attachment 1, page 13 of this VDCN).**

a.) Typical Outer PJM Pipe Support: Delete Typical Outer PJM Pipe Support view and replace with TYPICAL OUTER PJM SUPPORT, SECTION S-S and associated views shown on Attachment 1, page 14 of this VDCN.

b.) 36" Charge Vessel & Inner PJM Support: Delete 36" Charge Vessel & Inner PJM Support and replace with 36" CHARGE VESSEL & INNER PJM SUPPORT, SECTION N-N, and associated views shown on Attachment 1, page 14 of this VDCN.

8. **Affected Document: 24590-QL-POD-MVA0-00001-03-10 (see Attachment 1, page 15 of this VDCN).**

a.) 36" CV Delivery RFD Pump Detail: Remove support item 46 from TYP SUPPORT DETAIL and reference to SEE TYP SUPPORT DETAIL including dimension.

b.) 30" CV Delivery RFD Pump Detail: Remove support item 46 from TYP SUPPORT DETAIL and reference to SEE TYP SUPPORT DETAIL including dimension.

c.) Sampler RFD Pump Detail:

(1.) Remove support item 58 from TYP SUPPORT DETAIL.

(2.) Add DETAIL J, SECTION R-R, and SAMPLER PUMP RFD DETAIL shown on Attachment 1, page 16 of this VDCN.

(3.) Delete other detail shown and replace with SAMPLER PUMP RFD DETAIL and DETAIL H shown on Attachment 1, page 16 of this VDCN.

d.) Under title block, delete BNI reference drawing entitled, "REF DWG 24590-PTF MV-UFP-00005 REV 0".

Drawing Change Notice

CHANGE DOCUMENT NO.
24590-PTF-VDCN-MS-10-00009

JOB NO.	TITLE FOR CHANGE NOTICE
24590	UFP-VSL-00062C Redesign

DESCRIPTION OF CHANGE

9. **Affected Document: 24590-QL-POD-MVA0-00001-03-13 (see Attachment 1, page 17 of this VDCN).**

   a.) 2"SCH 80 INLET TO INTERNALS: Delete N34 and replace with Typical SCH 160 Nozzle Detail (REF Section Q-Q, Attachment 1, page 6 of 18).

   b.) Under title block, delete BNI reference drawing entitled, "REF DWG 24590-PTF MV-UFP-00005 REV 0".

10. **Affected Document: 24590-QL-POD-MVA0-00001-03-11 (see Attachment 1, page 18 of this VDCN).**

   a.) WASH RING TEE: Delete N34 and add Section Q-Q which depicts N34 details show on Attachment 1, page 6 of this VDCN.

   b.) Under title block, delete BNI reference drawing entitled, "REF DWG 24590-PTF MV-UFP-00005 REV 0".

ORIGINATOR	CHECKER
M. Mudry	L. Rodgers

Reviews

CON - S. Ristow 1/6/11	E&NS - J. Rathbun	CS&A - M. Axup	MET - J. Disney
MS&PE ~~- D. Evans~~ DVV 1/6/11	PD - J. Mc Grath	PE&T - J. Olson	

Approval(s)

PEQ - J. Julyk			

Date *(inserted by final approver)*: 1/6/11

CHANGE N07, N10, AND N34 AS FOLLOWS:
MATERIAL = SA312 TP316/316L 0.030% MAX C & THK = SCH160
BY RPP-WTP

DESIGN CONDITIONS

SPECIFICATIONS	PARENT VESSEL
DESIGN PRESSURE	~~15/-10.29 psig~~ 15/-2.0 BY RPP-WTP
HYDRO-TEST PRESSURE	~~19.5 psig~~ + 19.5 psig S.H.
DESIGN TEMPERATURE	~~120°F~~ 230°F BY RPP-WTP
MDMT	40°F
CODE	ASME SECTION VIII, DIVISION 1, 2001 EDITION, 2001 ADDENDUM
CODE STAMP (National Board No.)	REQUIRED
NON-DESTRUCTIVE TESTING	VT, UT, PT, RT, HELIUM TESTING, AND HYDROSTATIC TESTING PER ASME SECT. VIII, DIV. I
RADIOGRAPH (5)	PER PARA. 6.5.3 OF SPECIFICATION 24590-WTP-3PN-MV00-00006
JOINT EFFICIENCY	PER UW-12
CORROSION ALLOWANCE	0.04"
INSPECTION OPENING	REQUIRED PER UG-46(a)
IMPACT TESTING	NOT REQUIRED PER UHA-51(d)
POSTWELD HEAT TREATING	NOT REQUIRED PER UHA-32
MATERIAL, BOLTS/STUDS/NUTS	NOT APPLICABLE
MATERIAL, GASKETS	NOT APPLICABLE
INSULATION	NOT REQUIRED
WIND DESIGN	NOT REQUIRED
SNOW DESIGN	NOT REQUIRED
SEISMIC DESIGN	SC-I PER 24590-WTP-3PS-MV00-T0002 & 24590-WTP-3PS-SS90-T0001
BECHTEL QUALITY LEVEL	QL-1

(1) (1A) (3) BILL OF MATERIALS

MK	THICK/SIZE	MATERIAL	HEAT NO.	DESCRIPTION	QTY
1	⅜"	SA-240-316 w/ 0.030% max. C		SHELL	1
2	⅜" NOM.	SA-240-316 w/ 0.030% max. C		TOP HEAD - 180" I.D. 2:1 SE w/ 2" S.F. (5/16" MIN. AFTER FORMING)	1
3	⅜" NOM.	SA-240-316 w/ 0.030% max. C		BOTTOM HEAD - 180" I.D. 2:1 SE w/ 2" S.F. (5/16" MIN. AFTER FORMING)	1
4					
5	⅜"	SA-240-304 w/ 0.030% max. C		SUPPORT SKIRT	1
6	1½"	SA-240-304 w/ 0.030% max. C		SUPPORT RING BEAM TOP	1
7	1"	SA-240-304 w/ 0.030% max. C		SUPPORT RING BEAM SHELL	1
8	1½"	A-572-Gr50		SUPPORT RING BEAM BOTTOM	1
9					
10	1"	SA-240-304 w/ 0.030% max. C		TAILING LUG BACKING PLATE - 20" x 20"	1
11	2"	SA-240-304 w/ 0.030% max. C		TAILING LUG	1
12	1"	SA-240-304 w/ 0.030% max. C		TAILING LUG GUSSET	1
13	---	--------		DELETED	-
14					
15					
16					
17	1"	SA-240-316 w/ 0.030% max. C		LIFTING TRUNNION REPAD - 22" O.D.	2
18	½"	SA-240-304 w/ 0.030% max. C		LIFTING TRUNNION BARREL - 16" O.D. x 4" LONG	2
19	½"	SA-240-304 w/ 0.030% max. C		LIFTING TRUNNION KEEPER PLATE - 24" O.D.	2
20					
21	½"	SA-240-316 w/ 0.030% max. C		INSTRUMENT ASSEMBLY COVER PLATE	1
22	¼" x 1"	SA-240-316 w/ 0.030% max. C		INSTRUMENT ASSEMBLY SPACERS	23
23	2" SCH 160	SMLS. SA-312-TP316 w/ 0.030% max. C		BUBBLER SHELL	2
24	2" x 1"	SMLS. SA-312-TP316 w/ 0.030% max. C		BUBBLER REDUCER - 2 x 1, SCH 160	2
25	⅜" NOM.	SA-182-F316 w/ 0.030% max. C		MANWAY HEAD, 24" O.D. ASME F&D w/ 1½" S.F.	1
26					
27					
28					
29					
30	1½"ø	SA-182-F316 w/ 0.030% max. C		THERMOWELL POCKET (MACHINE PER DETAIL)	1
31	1" SCH 160	SMLS. SA-312-TP316 w/ 0.030% max. C		THERMOWELL DIP TUBE	2
32	2" SCH 40	SMLS. SA-312-TP316 w/ 0.030% max. C		WASH RING PIPE	1
33	5/16"	SA-240-316 w/ 0.030% max. C		WASH RING END CAP PLATE	6
34	5/16" x 2"	SA-240-316 w/ 0.030% max. C		WASH RING SUPPORTS	6
35	2" SCH 40	SMLS. SA-403-WP316S w/ 0.030% max. C		WASH RING TEE - 2" SCH 40 STRAIGHT TEE	3
36					
37	5/16"	SA-240-316 w/ 0.030% max. C		NAMEPLATE BRACKET (14" x 14" "U" w/ 2" LEGS) (4)	1
~~38~~	~~3/8"~~	~~SA-479-316 w/ 0.030% max. C~~		~~INTERNAL PIPING SUPPORT FORMED U-BOLT FOR 1" PIPE~~	~~[illegible]~~
39	MISC.	SA-240-316 w/ 0.030% max. C		PULSE JET MIXER (8) - SEE DWG. 3005A FOR DETAILS	6
40	MISC.	SA-240-316 w/ 0.030% max. C		CHARGE VESSEL (36") - SEE DWG. 3005B FOR DETAILS	3
41	---	--------		DELETED	-
42	MISC.	SA-240-316 w/ 0.030% max. C		CHARGE VESSEL (50") - SEE DWG. 3005D FOR DETAILS	2
43	½"	SA-240-304 w/ 0.030% max. C		SKIRT ACCESS (24" ø)	2
44	MISC.	SA-240-316 w/ 0.030% max. C		CHARGE VESSEL (18") - SEE DWG. 3005E FOR DETAILS	1
45	4" SCH 40	SA-312-TP316 w/ 0.030% max. C		SKIRT VENT (4½")	4
~~46~~	~~1" SCH 160~~	~~SA-312-TP316 w/ 0.030% max. C~~		~~INTERNAL PIPING SUPPORT~~	~~[illegible]~~
47	STD.	SA-403-316 w/ 0.030% max. C		2" SCH 80 CAP	1
~~48~~	~~[illegible]~~	~~SA-479-316 w/ 0.030% max. C~~		~~INTERNAL PIPING SUPPORT ANGLE~~	~~[illegible]~~
~~49~~	~~[illegible] x 2"~~	~~SA-240-316 w/ 0.030% max. C~~		~~INTERNAL PIPING LOWER SUPPORT~~	~~[illegible]~~
50	6" SCH 80	SA-312-TP316 w/ 0.030% max. C		CONNECTING PIPE, LENGTH A/R	5
51	1"	SA-240-316 w/ 0.030% max. C		INSERT PLATE (15" OD)	1
52	Sch 160	SA-403WP5-316 w/ 0.030% max. C		4" x 3" ECC. REDUCER - ENDS MACHINED TO SCH 80	5
53	4" SCH 80	SA-312-TP316 w/ 0.030% max. C		CONNECTING PIPE, LENGTH A/R	3
54	4" SCH 80	SA-312-TP316 w/ 0.030% max. C		CONNECTING PIPE, LENGTH A/R	2
~~55~~	~~3/8"~~	~~SA-479-316 w/ 0.030% max. C~~		~~INTERNAL PIPING SUPPORT FORMED U-BOLT FOR 1" PIPE~~	~~[illegible]~~
56	1" SCH 160	SA-312-TP316 w/ 0.030% max. C		CONNECTING PIPE, LENGTH A/R	1
57	1" SCH 160	SA-312-TP316 w/ 0.030% max. C		CONNECTING PIPE, LENGTH A/R	1
~~58~~	~~½" SCH 160~~	~~SA-312-TP316 w/ 0.030% max. C~~		~~INTERNAL PIPING SUPPORT~~	~~2~~

(3) (3) (3)

DELETE LINE ITEMS 38, 46, 48, 49, 55, 58
NOTE ITEM 49 IS DELETED AS REQUIRED. BY RPP-WTP

ADD ITEMS 59 & 60, BY RPP-WTP

(1) (1A) (2) CONNECTION SCHEDULE

BY RPP-WTP

MK	SIZE	NECK MATERIAL	NECK THK	HEAT NO.	DESCRIPTION	ELEV. "Z"	ELEV. "X"	RADIUS FROM CENTER	TYPE	CONN. THK
N05	2" OD	MACHINED SA-182-F316 w/ 0.030% max. C	SPCL		TEMPERATURE	307"	52"	50"	STUB	¾" SCH 10
N06	6" NPS	SEAMLESS SA-312-TP316 w/ 0.030% max. C	SCH 80		INSTRUMENTATION	309"	54"	30"	STUB	NA
N06A	1" NPS	SEAMLESS SA-312-TP316 w/ 0.030% max. C	SCH 160		BALANCE	314"	59"	30"	STUB	1" SCH 40
N06B	1" NPS	SEAMLESS SA-312-TP316 w/ 0.030% max. C	SCH 160		DENSITY	315"	60"	30"	STUB	1" SCH 40
N06C	1" NPS	SEAMLESS SA-312-TP316 w/ 0.030% max. C	SCH 160		LEVEL	316"	61"	30"	STUB	1" SCH 40
N07	2" NPS	~~SEAMLESS SA-312-TP316 w/ 0.030% max. C~~	~~SCH 80~~		INLET	298"	43"	(4) 68"	STUB	2" SCH 40
N09	2" NPS	SEAMLESS SA-312-TP316 w/ 0.030% max. C	SCH 80		INLET	303"	48"	45"	STUB	2" SCH 40
N10	2" NPS	~~SEAMLESS SA-312-TP316 w/ 0.030% max. C~~	~~SCH 80~~		INLET	303"	48"	45"	STUB	2" SCH 40
N11	2" NPS	SEAMLESS SA-312-TP316 w/ 0.030% max. C	SCH 80		INLET/AIR PURGE (4)	292⅝"	37⅝"	70"	STUB	2" SCH 40
N12	2" OD	MACHINED SA-182-F316 w/ 0.030% max. C	SPCL		AIR/VAC TO UFP-VSL-00023 (4)	291⅝"	36⅝"	72"	STUB	1" SCH 40
N13	2" OD	MACHINED SA-182-F316 w/ 0.030% max. C	SPCL		OUTLET/SAMPLE (UFP-RFD-00046) (4)	306½"	51½"	30"	STUB	1" SCH 40
N14	2" NPS	SEAMLESS SA-312-TP316 w/ 0.030% max. C	SCH 80		SAMPLE RETURN	303"	48"	45"	STUB	2" SCH 40
N16	2" NPS	SEAMLESS SA-312-TP316 w/ 0.030% max. C	SCH 160		AIR/VAC TO UFP-PJM-00073	298"	43"	60"	STUB	2" SCH 40
N17	2" NPS	SEAMLESS SA-312-TP316 w/ 0.030% max. C	SCH 160		OUTLET TO EJECTOR	NA	NA	NA	STUB	2" SCH 40
N18	2" NPS	SEAMLESS SA-312-TP316 w/ 0.030% max. C	SCH 160		AIR/VAC TO UFP-PJM-00076	303"	48"	45"	STUB	2" SCH 40
N19	2" NPS	SEAMLESS SA-312-TP316 w/ 0.030% max. C	SCH 160		AIR/VAC TO UFP-PJM-00077	298"	43"	60"	STUB	2" SCH 40
N20	2" NPS	SEAMLESS SA-312-TP316 w/ 0.030% max. C	SCH 160		AIR/VAC TO UFP-PJM-00078	303"	48"	45"	STUB	2" SCH 40
N21	2" NPS	SEAMLESS SA-312-TP316 w/ 0.030% max. C	SCH 160		AIR/VAC TO PWD-PJM-00070	298"	43"	60"	STUB	2" SCH 40
N22	6" NPS	SEAMLESS SA-312-TP316 w/ 0.030% max. C	SCH 80		OUTLET/VESSEL VENT	311"	56"	CENTER	STUB	6" SCH 10
N23	3" NPS	SEAMLESS SA-312-TP316 w/ 0.030% max. C	SCH 80		AIR/VAC TO UFP-VSL-00025	291"	36"	72"	STUB	3" SCH 40
N24	3" NPS	SEAMLESS SA-312-TP316 w/ 0.030% max. C	SCH 80		AIR/VAC TO UFP-VSL-00024	291"	36"	72"	STUB	3" SCH 40
N25	3" NPS	SEAMLESS SA-312-TP316 w/ 0.030% max. C	SCH 80		AIR/VAC TO UFP-VSL-00064	293"	38"	64"	STUB	3" SCH 40
N26	3" NPS	SEAMLESS SA-312-TP316 w/ 0.030% max. C	SCH 80		AIR/VAC TO UFP-VSL-00070	293"	38"	69"	STUB	3" SCH 40
N28	4" NPS	SEAMLESS SA-312-TP316 w/ 0.030% max. C	SCH 80		OUTLET FROM UFP-RFD-00044	311"	56"	12"	STUB	4" SCH 40
N29	4" NPS	SEAMLESS SA-312-TP316 w/ 0.030% max. C	SCH 80		OUTLET FROM UFP-RFD-00045 (4)	310⅝"	55⅝"	12"	STUB	4" SCH 40
N30	4" NPS	SEAMLESS SA-312-TP316 w/ 0.030% max. C	SCH 80		OUTLET FROM UFP-RFD-00043	310"	55"	16"	STUB	4" SCH 40
N32	4" NPS	SEAMLESS SA-312-TP316 w/ 0.030% max. C	SCH 80		OUTLET FROM UFP-RFD-00042 (4)	309⅝"	54⅝"	16"	STUB	4" SCH 40
N34	2" NPS	~~SEAMLESS SA-312-TP316 w/ 0.030% max. C~~	~~SCH 80~~		INLET TO WASH RING	293"	38"	70"	STUB	2" SCH 40
N35	2" NPS	SEAMLESS SA-312-TP316 w/ 0.030% max. C	SCH 80		INLET TO WASH RING	293"	38"	70"	STUB	2" SCH 40
N36	2" NPS	SEAMLESS SA-312-TP316 w/ 0.030% max. C	SCH 80		INLET TO WASH RING	293"	38"	70"	STUB	2" SCH 40
N37	6" NPS	SEAMLESS SA-312-TP316 w/ 0.030% max. C	SCH 80		OUTLET/OVERFLOW	NA	NA	NA	STUB	6" SCH 10
N38	2" NPS	SEAMLESS SA-312-TP316 w/ 0.030% max. C	SCH 80		SPARE (4)	290 1/16"	35 1/16"	72"	STUB	CAPPED
N39	24" OD	WELDED SA-240-316 w/ 0.030% max C	½"		MANWAY (TACKED CAP)	305"	50"	39"	STUB	CAPPED
N40	3" NPS	SEAMLESS SA-312-TP316 w/ 0.030% max. C	SCH 80		SPARE	293"	38"	70"	STUB	3" SCH 40
N41	2" NPS	SEAMLESS SA-312-TP316 w/ 0.030% max. C	SCH 160		AIR/VAC TO UFP-PJM-00107	303"	48"	45"	STUB	2" SCH 40
N44	4" NPS	SEAMLESS SA-312-TP316 w/ 0.030% max. C	SCH 80		OUTLET FROM UFP-RFD-00048 (4)	310½"	55½"	12"	STUB	4" SCH 40
N45	3" NPS	SEAMLESS SA-312-TP316 w/ 0.030% max. C	SCH 80		AIR/VAC TO UFP-VSL-00084	293"	38"	64"	STUB	3" SCH 40
N46	2" NPS	SEAMLESS SA-312-TP316 w/ 0.030% max. C	SCH 80		FORCED AIR PURGE	303"	48"	45"	STUB	2" SCH 40

DELETE AND REPLACE BY RPP-WTP

GENERAL NOTES and SPECIAL REQUIREMENTS

1. NWC Quality Assurance Manual ASME NQA-1 applies in its entirety for this project.
2. All material, including weld wire, for this project shall be purchased from approved Level 3 & 4 suppliers.
3. All 316SS material, including weld wire, shall be PMI tested and approved prior to use.
4. No deviations from this drawing is allowed without Bechtel approval.
5. The base of the vessel support skirt and ring beam shall be marked after shop assembly, using a line of welding bead, at the 0° Orientation as shown on the drawing. Skirt base to be suitably reinforced prior to shipment.
6. A datum line shall be marked on the heads with low stress stamping 2" away from the head/shell seam.
7. Contact materials shall be approved prior to use. This is to include marking material, lubricants, tape, anti-spatter spray, harmful metals or salts such as zinc, lead, or copper, etc. Total halogens in the contact materials shall be less than 200 ppm.
8. Fabrication tolerance shall be in accordance with Bechtel drawing Pressure Vessel Tolerances Standard Details DWG. # 24590-WTP-MV-M59T-00001.
9. Plate 3/8" and over in thickness shall not be sheared to size. All lubricants, burrs, and debris shall be removed after cutting.
10. Internal piping bends shall have a center line radius of four times the pipe nominal diameter. A pipe shall not be terminated or butt-welded within 4" of the bend.
11. Longitudinal seams shall be completed and have successfully passed any NDE prior to welding any adjoining circumferential seams.
12. Manway cover head shall be prepared for field welding, tacked into place with 4 @ ½" long tacks 90° apart, sealed to prevent dirt and water entry, and marked with the item number.
13. Nozzles shall be prepared for field welding, shall be covered with a hard rubber or plastic cap, and shall be sealed to prevent dirt or water entry.
14. All attachments e.g. lugs, brackets, nozzles and other members shall follow the contour of the surface to which they will be attached. The gap at the exposed edges shall not exceed 1/16" prior to welding.
15. All attachments that use only fillet welds shall have a maximum gap of 1/8" between the components being joined.
16. All temporary attachments shall be 316 stainless steel.
17. All temporary attachments shall be removed prior to hydrostatic test.
18. PMI to be performed on all pressure retaining items including welds after fabrication.

UT per ASME Section VIII Div. 1 Appendix 12 (4)

1. The shell and head sections under the lifting lugs, tailing lugs, and internal vessel supports shall be ultrasonically examined over 100% of the area that extends 5" beyond each side of the perimeter of the proposed fillet weld attachment to the shell or head.
2. All welds attaching internal or external components to the shell or heads shall be ultrasonically examined. This examination does not include nozzle to vessel wall welds.
3. All shell and head sections for 3" around nozzle penetrations shall be ultrasonically examined prior to welding.
4. All nozzle welds to the shell or head with internal projection shall be ultrasonically examined.

PT per ASME Section VIII Div. 1 Appendix 8 (1A) (3) (4)

1. All welds over 3/4" in 304 & 316 series Stainless Steel shall be dye penetrant examined.

CHANGE TO UW-51 BY RPP-WTP

RT per ASME Section VIII Div. 1 ~~Appendix 4~~ (1A) (3) (4)

1. All butt welds in the shell shall be 100% radiographically examined.
2. All nozzle welds to the shell or head without internal projection shall be radiographically examined.
3. Butt welds in internal piping shall be radiographically examined. This does not include internal pipe supports and braces.
4. All butt welds in the nozzle necks shall be radiographically examined.
5. All thermowell socket welds shall be radiographically examined.

OPERATING: 512,285 lbs
FULL WATER: 401,100 lbs
EMPTY: 103,000 lbs
BY RPP-WTP

R10443754

Helium Leak Test

1. All thermowell socket welds shall be helium leak tested.

(4)

NB 4024
CERTIFIED BY:
NORTHWEST COPPER WORKS, INC.
PORTLAND, OREGON 97227
U
RT-1
15/-10.29 PSI AT 120° F
MAXIMUM ALLOWABLE WORKING PRESSURE
40° F AT 15/-10.29 PSI
MINIMUM DESIGN METAL TEMPERATURE
3007
SERIAL NUMBER
2004
YEAR BUILT
JOB No.: 24590
CONTRACT No.: DE-AC27-01RV14136
PLANT ITEM NO.: UFP-VSL-00062C
FABRICATION SPEC: 24590-WTP-3PS-MV00-T0001
DESIGN PRESSURE: 15 PSIG
EXTERNAL PRESSURE: 10.29 PSIG
HYDROTEST PRESSURE: 19.5 PSIG AT TOP
DESIGN TEMPERATURE: 120 °F
MIN. DESIGN METAL TEMP.: 40 °F
MATERIAL OF CONSTRUCTION: 316SSW/0.030%MAXC
ERECTED WEIGHT: 100,000 lbs

(4) (3) (1A)

\# 24590-PTF-MV-UFP-VSL-00062C
Bechtel National, Inc. Job No. 24590
SUPPLIER DOCUMENT STATUS
1. [X] Work may proceed.
2. [ ] Revise and resubmit. Work may proceed subject to resolution of indicated comments.
3. [ ] Revise and resubmit. Work may not proceed.
4. [ ] Review not required. Work may proceed.
Permission to proceed does not constitute acceptance or approval of design details, calculations, analyses, test methods, or materials developed or selected by the supplier and does not relieve supplier from full compliance with contractual obligations.
REVIEWED: M, HK
G-321 Document Category: 1.1
(From Supplement A to G-321-E (S) or G-321-V (V), as applicable, or "N/A" if SSRS is used)
Supersedes BNI Document No. (When applicable) Rev.
Accepted by: H. KHURANA [signature] 04/13/05
Released by (When applicable)

REVISIONS

NO	DESCRIPTION	REV BY	APD BY	DATE
5	UPDATED RADIOGRAPH SPEC REFERENCE	SMT	MJV	12/06/04
4	REVISED PER CUSTOMER COMMENTS & ENGINEERING CHANGES	SMT	MJV	11/05/04
3	REVISED PER CUSTOMER COMMENTS & ENGINEERING CHANGES	SMT	MJV	08/08/04
2	REVISED PER CUSTOMER COMMENTS & ENGINEERING CHANGES	MDH	MJV	09/03/03
1A	REVISED PER CUSTOMER COMMENTS & ENGINEERING CHANGES	MDH	MJV	07/18/03
1	REVISED PER CUSTOMER COMMENTS & ENGINEERING CHANGES	MJV	MDH	04/28/03

NORTHWEST COPPER WORKS INC.

ESTIMATED WEIGHT, (IN LBS)
OPERATING - ~~[illegible] lbs~~
FULL WATER - ~~[illegible] lbs~~
EMPTY - ~~[illegible] lbs~~

NORTHWEST COPPER WORKS, INC.
1303 N. RIVER STREET • PORTLAND, OREGON • 97227

180" I.D. ULTRAFILTER
PERMEATE COLLECTION VESSEL

BECHTEL NATIONAL INC.
3000 George Washington Way
Richland, Washington 99352

EQUIP. NO. UFP-VSL-00062C	P.O. NO. 24590-QL-POD-MVA0-00001 REV 0	
SCALE AS NOTED	JOB NO. 3007	DWG. NO. D- 3007 — REV 5
DATE 01/17/03	CHKD. BY KRT	
DWN. BY MDH	APPD. BY MDH	SHT. NO. 1 OF 8

BECHTEL NATIONAL INC. FOR D.O.E.
RIVER PROTECTION PROJECT IN RICHLAND, WA
~~REF. DWG 24590-PTF-MV-UFP-00005 REV 0~~ BECHTEL DOC. 24590-QL-POD-MVA0-00001-03-07 REV. 00E F
DELETED BY RPP-WTP [initials] 12/09/09

P:\Swap\ACAD\03\D3007-5 Mon Dec 06 10:03:47 2004

Some information on all page(s) may appear to be illegible, however, the information necessary for assuring adequate design is legible.

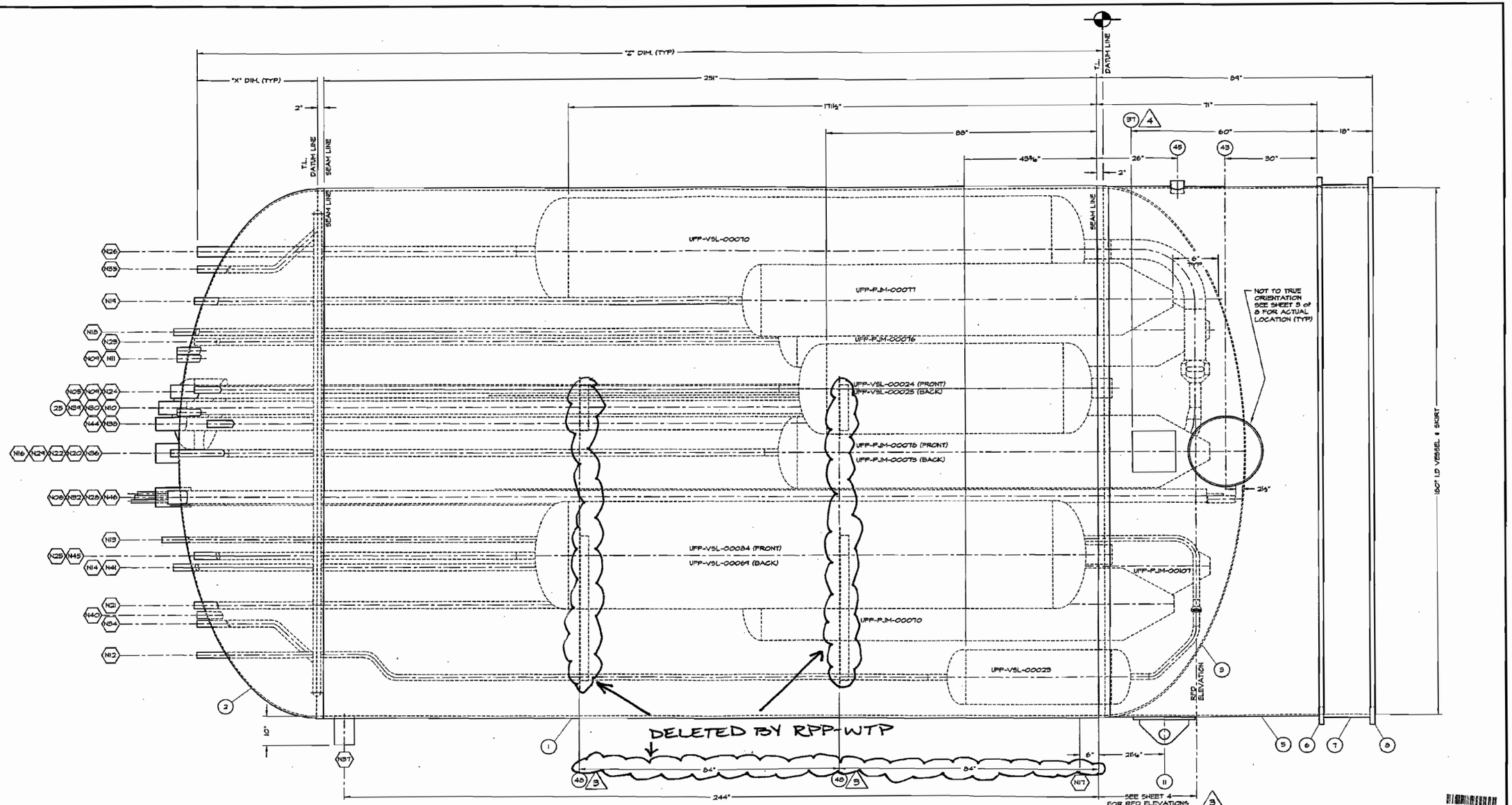

VESSEL ELEVATION
SCALE: ⅜" = 1'-0"

Some information on all page(s) may appear to be illegible, however, the information necessary for assuring adequate design is legible.

24590-PTF-MV-UFP-VSL-00062C
Job No. 24590
Bechtel National, Inc.
SUPPLIER DOCUMENT STATUS
1. ☒ Work may proceed.
2. ☐ Revise and resubmit. Work may proceed subject to resolution of indicated comments.
3. ☐ Review and resubmit. Work may not proceed.
4. ☐ Review not required. Work may proceed.
Participation in proceed does not constitute acceptance or approval of design details, calculations, analyses, test methods, or materials developed or selected by the supplier and does not relieve supplier from full responsibility with contractual obligations.
REVIEWED FJ HK
G-321 Procedure Category 1-1
(From Supplement A to G-321-E (S) or G-321-V (V), as applicable, or "N/A" if SBRS is used)
Supersedes BNI Document No. ____ Rev ____
(When applicable)
Accepted by H. KHUEAN 01/12/05
Released by
(When applicable)
G-321-F-1-10

REVISIONS				
NO	DESCRIPTION	REV BY	APD BY	DATE
5	NO CHANGES	SMT	MJV	12/06/04
4	ADDED NAMEPLATE ELEVATION	SMT	MJV	11/05/04
3	REVISED PER CUSTOMER COMMENTS & ENGINEERING CHANGES	SMT	MJV	06/08/04
2	REVISED PER CUSTOMER COMMENTS & ENGINEERING CHANGES	MDH	MJV	04/23/03
1A	REVISED PER CUSTOMER COMMENTS & ENGINEERING CHANGES	MDH	MJV	07/18/03
1	REVISED PER CUSTOMER COMMENTS & ENGINEERING CHANGES	MJV	MDH	04/28/03

NORTHWEST COPPER WORKS, INC.
1303 N. RIVER STREET • PORTLAND, OREGON • 97227

180" I.D. ULTRAFILTER
PERMEATE COLLECTION VESSEL ELEVATION

BECHTEL NATIONAL INC.
3000 George Washington Way
Richland, Washington 99352

SCALE ⅜" = 1'-0"	JOB NO. 3007	EQUIP. NO. UFP-VSL-00062C	
DATE 01/11/03	CHKD. BY KRT	P.O. NO. 24590-QL-POD-MVAO-00001 REV 0	
DWN. BY MDH	APPD. BY MDH	DWG. NO. D-3007	REV 5
		SHT. NO. 2 OF 8	

~~REF: DWG 24590-PTF-MV-UFP-00065 REV 0~~
BECHTEL DOC. 24590-QL-POD-MVAO-00001-09-08 REV. 00E.F
DELETED BY RPP-WTP

P:\Sasp\ACAD\03\D3007-5 Mon Dec 06 10:03:37 2004

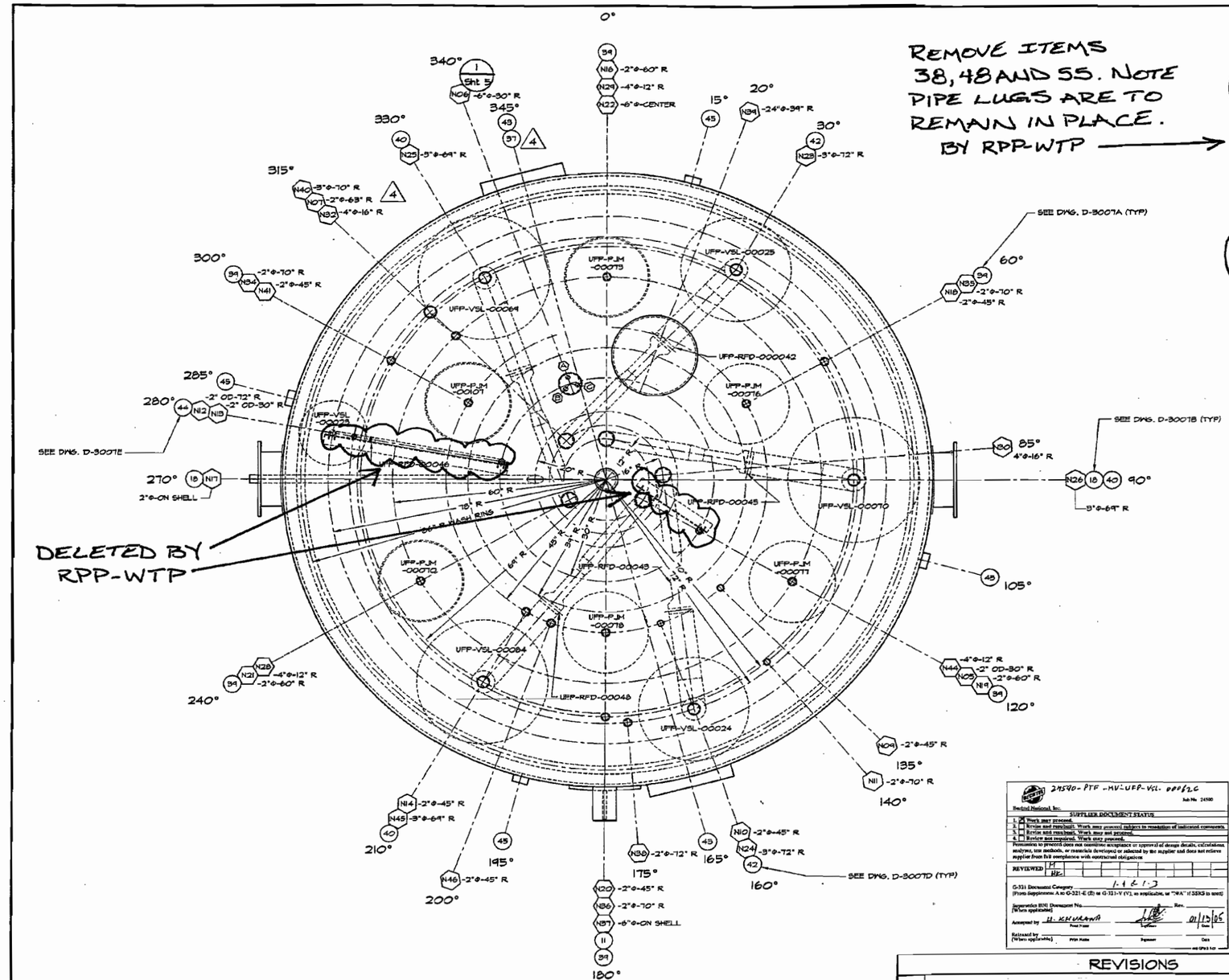

REMOVE ITEMS 38, 48 AND 55. NOTE PIPE LUGS ARE TO REMAIN IN PLACE. BY RPP-WTP

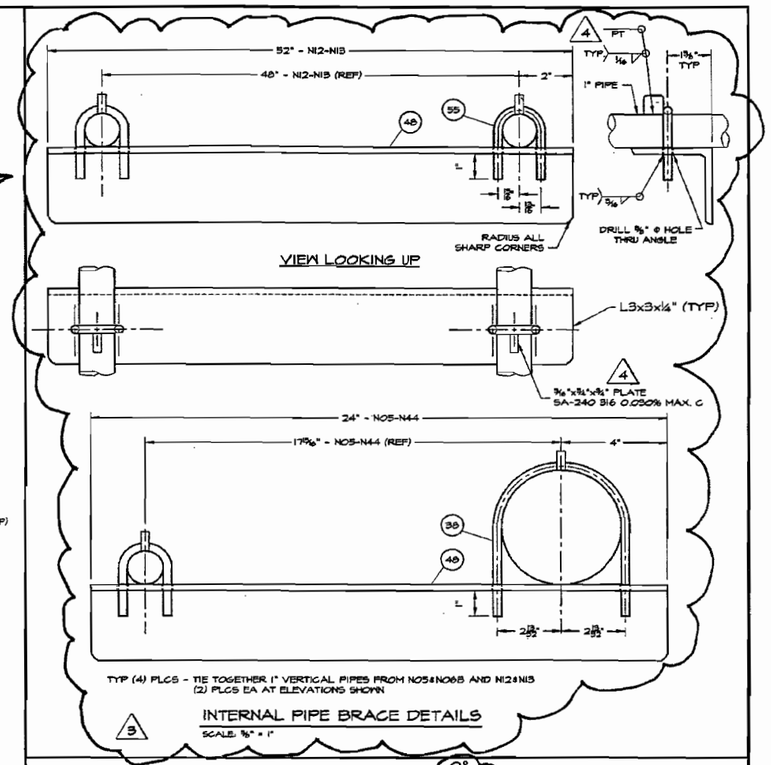

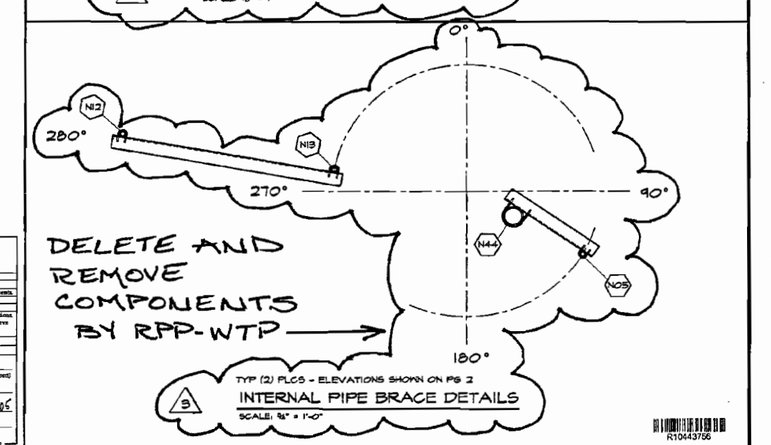

24590-PTF-MV-UFP-VSL-000620
Job No. 24590
Bechtel National, Inc.
SUPPLIER DOCUMENT STATUS
1. ☒ Work may proceed.
2. ☐ Revise and resubmit. Work may proceed subject to resolution of indicated comments.
3. ☐ Revise and resubmit. Work may not proceed.
4. ☐ Review not required. Work may proceed.
Permission to proceed does not constitute acceptance or approval of design details, calculations, analyses, test methods, or materials developed or selected by the supplier and does not relieve supplier from full compliance with contractual obligations
REVIEWED: PF, HE
G-321 Document Category: 1-1-E-1-3
[Form Supplement A to G-321-E (E) or G-321-V (V), as applicable, or "N/A" if 3283 is used]
Supersedes [ID] Document No. _____ Rev. _____
[When applicable]
Accepted by: H. KHURANA — 01/13/05
Print Name — Signature — Date
Released by: _____ — _____ — _____
[When applicable] Print Name — Signature — Date
NE DP43 1/97

R10443756

VESSEL ORIENTATION
SCALE: 3/8" = 1'-0"

REVISIONS

NO	DESCRIPTION	REV BY	APD BY	DATE
5	NO CHANGES	SMT	MJV	12/06/04
4	REVISED PER CUSTOMER COMMENTS & ENGINEERING CHANGES	SMT	MJV	11/05/04
3	REVISED PER CUSTOMER COMMENTS & ENGINEERING CHANGES	SMT	MJV	06/06/04
2	REVISED PER CUSTOMER COMMENTS & ENGINEERING CHANGES	MDH	MJV	04/09/03
1A	REVISED PER CUSTOMER COMMENTS & ENGINEERING CHANGES	MDH	MJV	07/18/03
1	REVISED PER CUSTOMER COMMENTS & ENGINEERING CHANGES	MJV	MDH	04/28/03

NORTHWEST COPPER WORKS, INC.
1303 N. RIVER STREET • PORTLAND, OREGON • 97227

180" I.D. ULTRAFILTER PERMEATE COLLECTION VESSEL PLAN

BECHTEL NATIONAL INC.
3000 George Washington Way
Richland, Washington 99352

EQUIP. NO. UFP-VSL-000620			
P.O. NO. 24590-QL-POD-MVAO-00001 REV 0			
SCALE 3/8" = 1'-0"	JOB NO. 3007	DWG. NO. D-3007	REV 5
DATE 04/28/03	CHKD. BY KRT		
DWN. BY MDH	APPD. BY MDH	SHT. NO. 3 OF 8	

~~REF: DWG 24590-PTF-MV-UFP-000005 REV 0~~ pd 12/09/04
BECHTEL DOC. 24590-QL-POD-MVAO-00001-03-09 REV. 00B P
DELETED BY RPP-WTP

Swap\ACAD\03\D3007-5 Mon Dec 06 10:03:27 2004

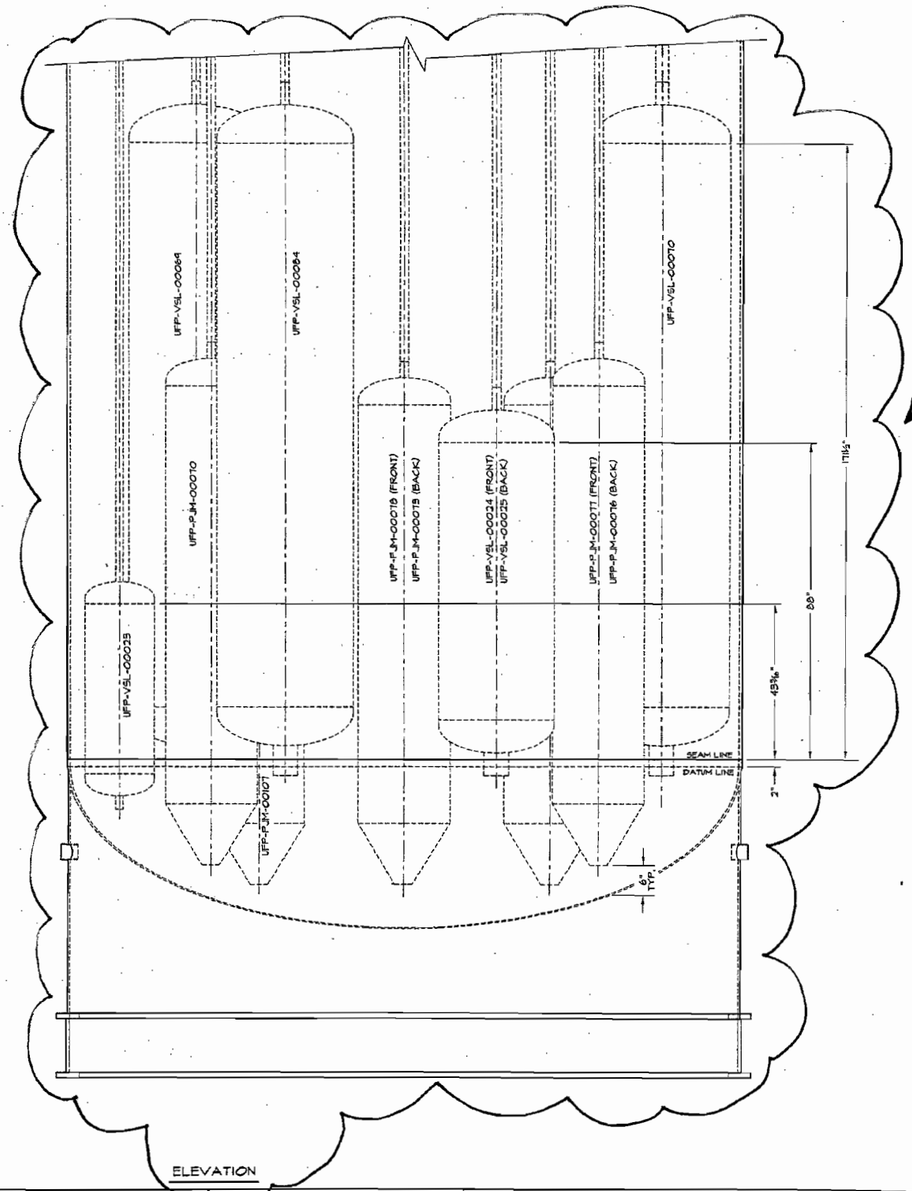

ELEVATION

DELETED BY RPP-WTP

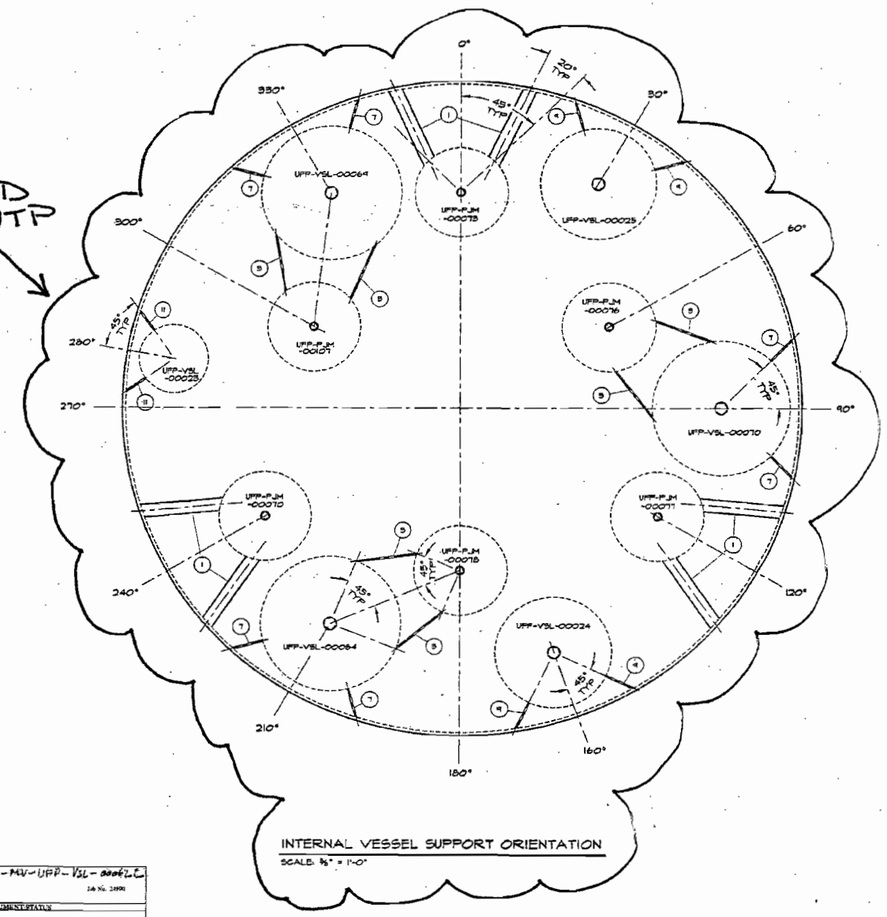

INTERNAL VESSEL SUPPORT ORIENTATION
SCALE: ½" = 1'-0"

Some information on all page(s) may appear to be illegible, however, the information necessary for assuring adequate design is legible.

24590-PTF-MV-VPP-VSL-00062C
Job No. 24590
Bechtel National, Inc.
SUPPLIER DOCUMENT STATUS
1. [X] Work may proceed.
2. [ ] Revise and resubmit. Work may proceed subject to resolution of indicated comments.
3. [ ] Revise and resubmit. Work may not proceed.
4. [ ] Review not required. Work may proceed.
Permission to proceed does not constitute acceptance or approval of design details, calculations, analyses, test methods, or materials developed or selected by the supplier and does not relieve supplier from full compliance with contractual obligations.
REVIEWED BY: PM / BC
(S-T21 Documents Category 1 / 3)
(From Supplement A to G-321-Y (Y1, as applicable), or "NOA" if ASME is used)
Supported RNT Document No. ____ Rev ____
(If box applicable)
Accepted by: [signature] Project Engineer / [signature] Supplier Rep. 07/06/04
Rejected by: (If box applicable) Project Engineer / Supplier Rep. Date
G-321 Rev. 1

BILL OF MATERIALS

MK	THICK/SIZE	MATERIAL	HEAT NO.	DESCRIPTION	QTY
1	4" SCH 40	WELDED SA-312-TP316 w/ 0.030% max. C		OUTER PULSE JET MIXER SUPPORT PIPE	12
2					
3	½"	SA-240-316 w/ 0.030% max. C		INNER PULSE JET MIXER SUPPORT PLATE	12
4					
5					
6					
7	½"	SA-240-316 w/ 0.030% max. C		36" CHARGE VESSEL SUPPORT PLATE	12
8					
9	½"	SA-240-316 w/ 0.030% max. C		50" CHARGE VESSEL SUPPORT PLATE	4
10					
11	½"	SA-240-316 w/ 0.030% max. C		18" CHARGE VESSEL SUPPORT PLATE	2

CONSTRUCTION NOTES

NOTE 2: Where plate material is specified as ASME SA240, ASME SA479 material may be substituted.

→ ADD NOTE, BY RPP-WTP

REVISIONS

NO	DESCRIPTION	REV BY	APD BY	DATE
2	REVISED PER ENGINEERING CHANGES	SMT	MDH	06/23/04
1	REVISED PER CUSTOMER COMMENTS	MJV	MDH	04/08/03

NORTHWEST COPPER WORKS INC.

NORTHWEST COPPER WORKS, INC.
1303 N. RIVER STREET • PORTLAND, OREGON • 97227

180" I.D. ULTRAFILTER PERMEATE VESSEL INTERNAL SUPPORT

BECHTEL NATIONAL INC.
3000 George Washington Way
Richland, Washington 99352

EQUIP. NO. UFP-VSL-000620
P.O. NO. 24590-QL-PO-MVAO-00001 REV 0

SCALE	AS NOTED	JOB NO. 3007F	DWG. NO. D-3007F	REV 2
DATE	06/06/03	CHKD. BY MDH		
DWN. BY	MJV	APPD. BY MJV	SHT. NO. 1 OF 2	

BECHTEL DOC. NO. 24590-QL-B05-MVAO-00001-05-00 REV 005

R1303595B

F:\Swap\ACAD\03\D3007F-2.dwg, 6/8/2004 10:27:20 AM

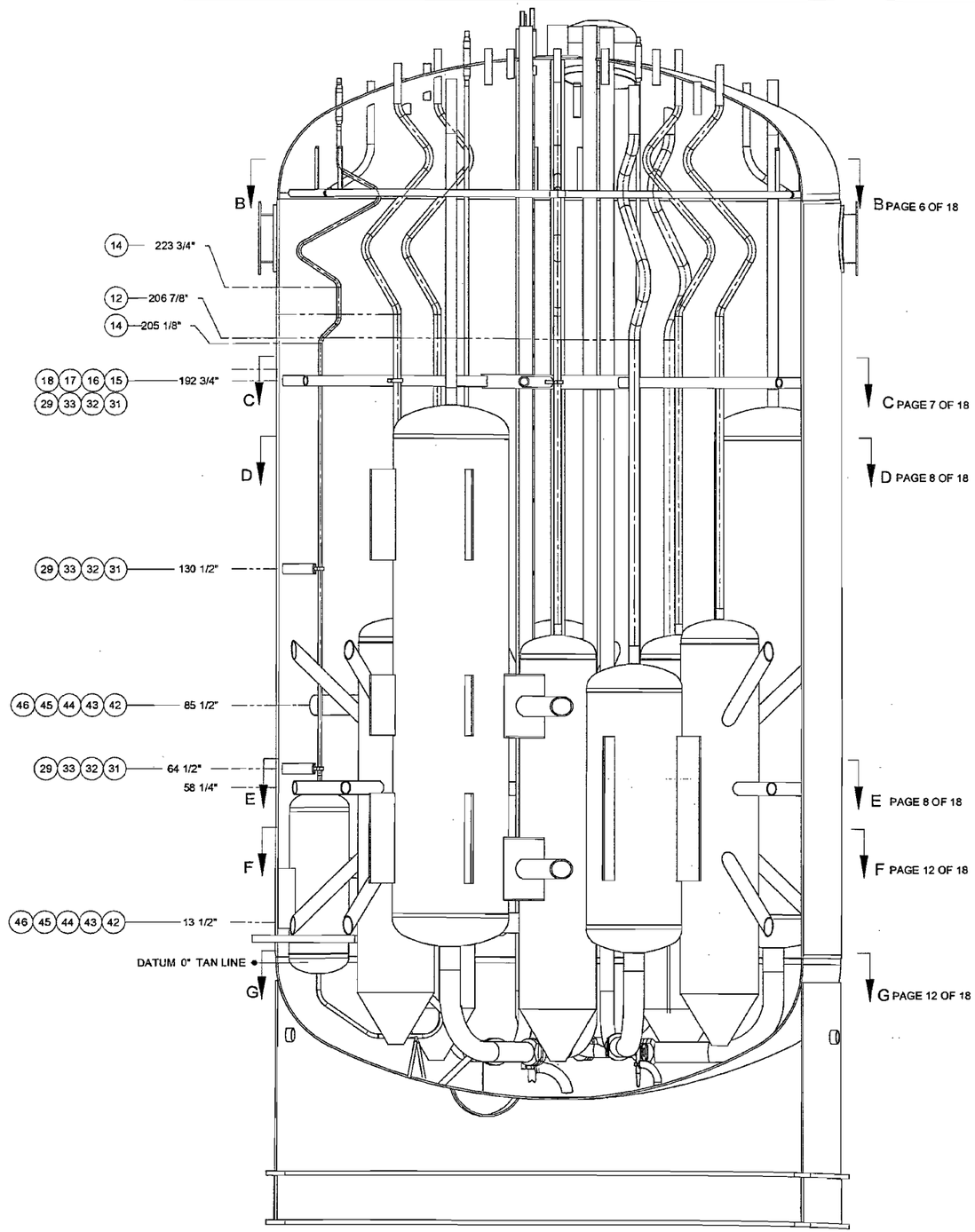

NORTH ELEVATION

BILL OF MATERIALS

MK	THICK/SIZE	MATERIAL	HEAT NO.	DESCRIPTION	QTY
12	3" SCHED 80S	SA 312 TP 316/316L 0.030% MAX C		SMLS PIPE, THERMAL EXPANSION S-BEND	2
13	2" SCHED 80S	SA 312 TP 316/316L 0.030% MAX C		SMLS PIPE, THERMAL EXPANSION S-BEND	6
14	1" SCHED 80S	SA 312 TP 316/316L 0.030% MAX C		SMLS PIPE, THERMAL EXPANSION S-BEND	1
15	4" SCHED 80S	SA 312 TP 316/316L 0.030% MAX C		SMLS PIPE, CENTER SUPPORT	1
16	3" SCHED 80S	SA 312 TP 316/316L 0.030% MAX C		SMLS PIPE, RADIAL SUPPORT	6
		NOT USED			
		NOT USED			
19	3/4"X 6 1/4"	SA 240 TP 316/316L 0.030% MAX C		PLATE, 4" GUIDE RING SUPPORT	2
20	3/4"X 6 1/4"	SA 240 TP 316/316L 0.030% MAX C		PLATE, 4" GUIDE RING SUPPORT	3
21	3/4"X 1"	SA 240 TP 316/316L 0.030% MAX C		PLATE, 4" GUIDE RING	15
22	1/2"X 1"	SA 240 TP 316/316L 0.030% MAX C		PLATE, 2" GUIDE RING	7
23	1"X 3 5/8"	SA 240 TP 316/316L 0.030% MAX C		PLATE, 2" GUIDE RING SUPPORT	3
24	1"X 3 5/8"	SA 240 TP 316/316L 0.030% MAX C		PLATE, 2" GUIDE RING SUPPORT	2
		NOT USED			
26	1"X 3 5/8"	SA 240 TP 316/316L 0.030% MAX C		PLATE, 2" GUIDE RING SUPPORT	1
		NOT USED			
28	1/2"X 2 1/2"	SA 240 TP 316/316L 0.030% MAX C		PLATE, 1" GUIDE RING SUPPORT	1
29	1/2"X 1"	SA 240 TP 316/316L 0.030% MAX C		PLATE, 1" GUIDE RING	13
30	1/2"X 2 1/2"	SA 240 TP 316/316L 0.030% MAX C		PLATE, 1" GUIDE RING SUPPORT	2
31	3" SCHED 80S	SA 312 TP 316/316L 0.030% MAX C		SMLS PIPE	3
32	1/2"	SA 240 TP 316/316L 0.030% MAX C		PLATE, Ø 3 1/2"	3
33	1"X 1"X 2 1/2"	SA 240 TP 316/316L 0.030% MAX C		PLATE	3
34	6" SCHED 80S	SA 312 TP 316/316L 0.030% MAX C		SMLS PIPE, KICKER SUPPORT	6
35	1/2" MIN	SA 240 TP 316/316L 0.030% MAX C		KICKER SUPPORT PLATE	12
36	4" SCHED 80S	SA 312 TP 316/316L 0.030% MAX C		SMLS PIPE, OUTER PJM SUPPORT	6
37	1/2" MIN	SA 240 TP 316/316L 0.030% MAX C		36" CHARGE VESSEL SUPPORT PLATE	4
38	2" SCHED 160S	SA 312 TP 316/316L 0.030% MAX C		SMLS PIPE	1
39	1/2"X 2 3/4"X 2 3/4"	SA 240 TP 316/316L 0.030% MAX C		PLATE	1
40	3" SCHED 160S	SA 312 TP 316/316L 0.030% MAX C		SMLS PIPE	1
41	1/2"X 3 7/8"X 3 7/8"	SA 240 TP 316/316L 0.030% MAX C		PLATE	1
42	6" SCHED 80S	SA 312 TP 316/316L 0.030% MAX C		SMLS PIPE, CENTER PJM SUPPORT	2
43	6" SCHED 80S	SA 312 TP 316/316L 0.030% MAX C		SMLS PIPE, CENTER PJM SUPPORT	4
44	4" SCHED 80S	SA 312 TP 316/316L 0.030% MAX C		SMLS PIPE, CENTER PJM SUPPORT	2
45	4" SCHED 80S	SA 312 TP 316/316L 0.030% MAX C		SMLS PIPE, CENTER PJM SUPPORT	2
46	4" SCHED 80S	SA 312 TP 316/316L 0.030% MAX C		SMLS PIPE, CENTER PJM SUPPORT	4
47	1"X 6 1/4"	SA 240 TP 316/316L 0.030% MAX C		PLATE, 4" GUIDE RING SUPPORT	4
48	1"X 6 1/4"	SA 240 TP 316/316L 0.030% MAX C		PLATE, 4" GUIDE RING SUPPORT	2
49	1"X 6 1/4"	SA 240 TP 316/316L 0.030% MAX C		PLATE, 4" GUIDE RING SUPPORT	2
50	1"X 6 1/4"	SA 240 TP 316/316L 0.030% MAX C		PLATE, 4" GUIDE RING SUPPORT	2
51	1"X 2 1/2"	SA 240 TP 316/316L 0.030% MAX C		PLATE, 1" GUIDE RING SUPPORT	2
52	1"X 2 1/2"	SA 240 TP 316/316L 0.030% MAX C		PLATE, 1" GUIDE RING SUPPORT	2
53	1"X 2 1/2"	SA 240 TP 316/316L 0.030% MAX C		PLATE, 1" GUIDE RING SUPPORT	2

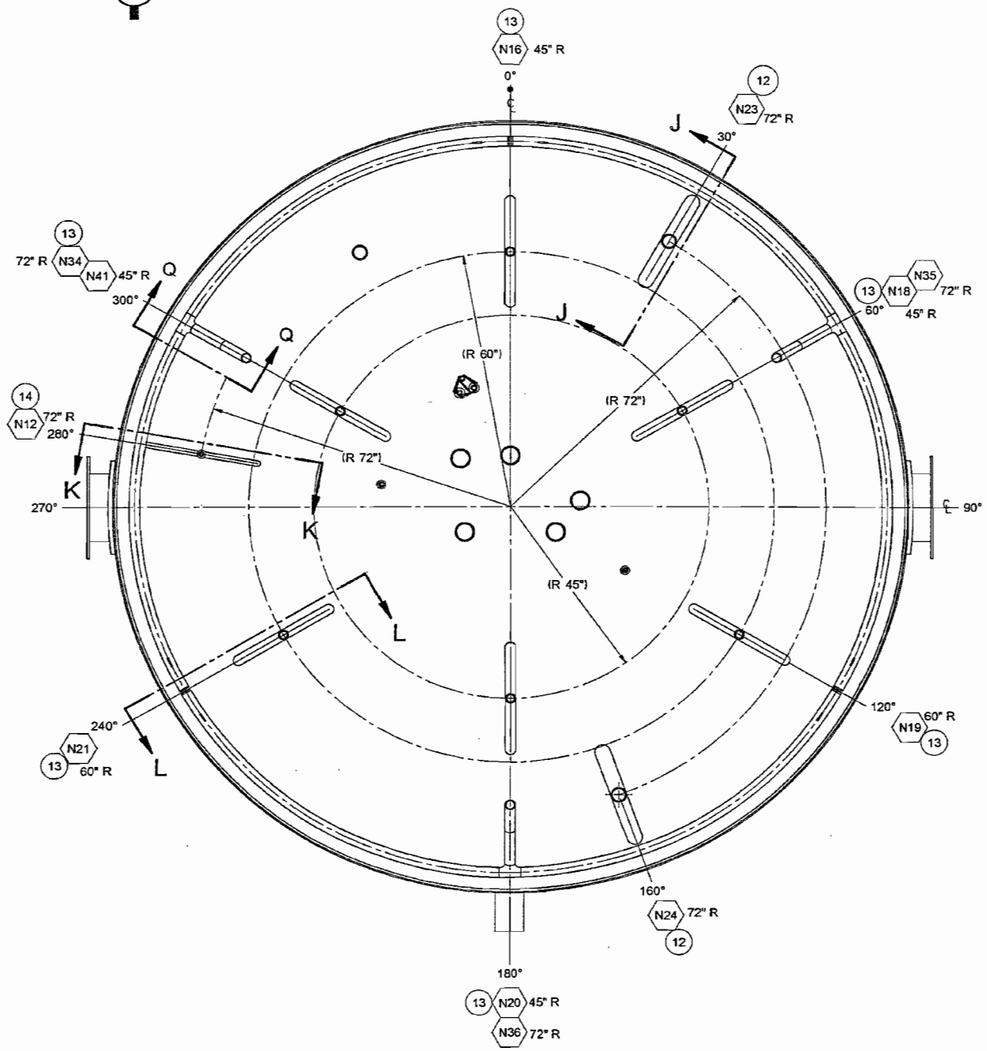

SECTION B-B
SCALE: 1/16

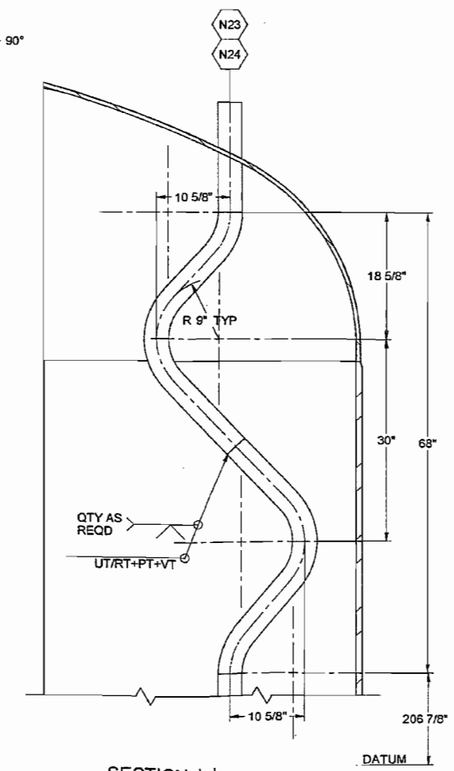

12 SECTION J-J
THERMAL EXPANSION S-BEND
SCALE: 1/10

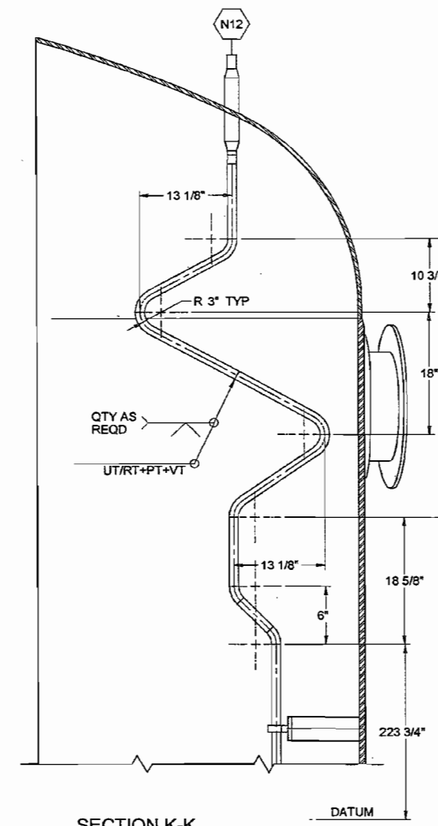

14 SECTION K-K
THERMAL EXPANSION S-BEND
SCALE: 1/10

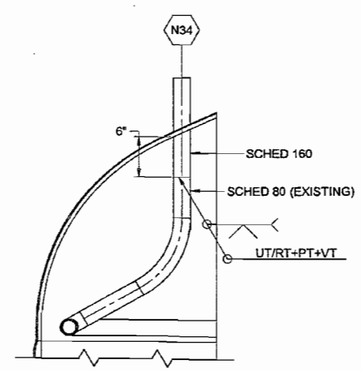

SECTION Q-Q
SCALE: 1/10

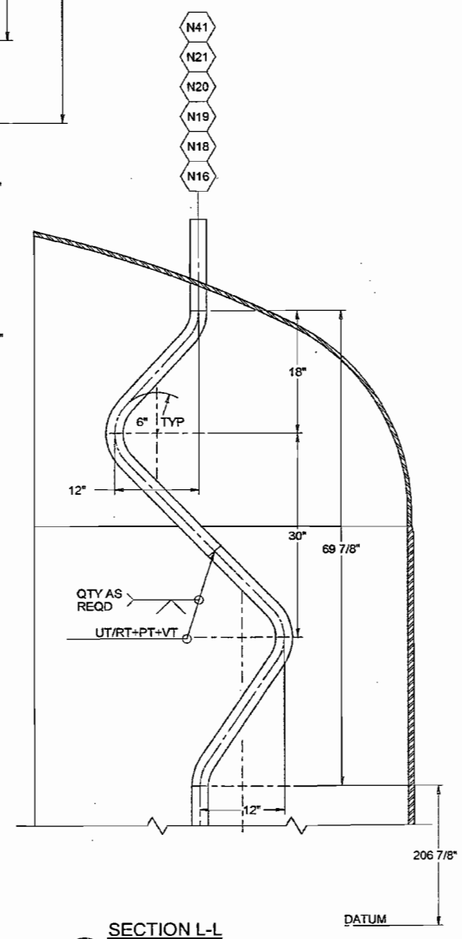

13 SECTION L-L
THERMAL EXPANSION S-BEND
SCALE: 1/10

NOTES:

1. GUIDE RINGS ARE WELDED AFTER CORRECTLY POSITIONING THE GUIDE RING SUPPORTS. GUIDE RINGS SHALL MAINTAIN .125 DIAMETRAL CLEARANCE WITH PIPE.

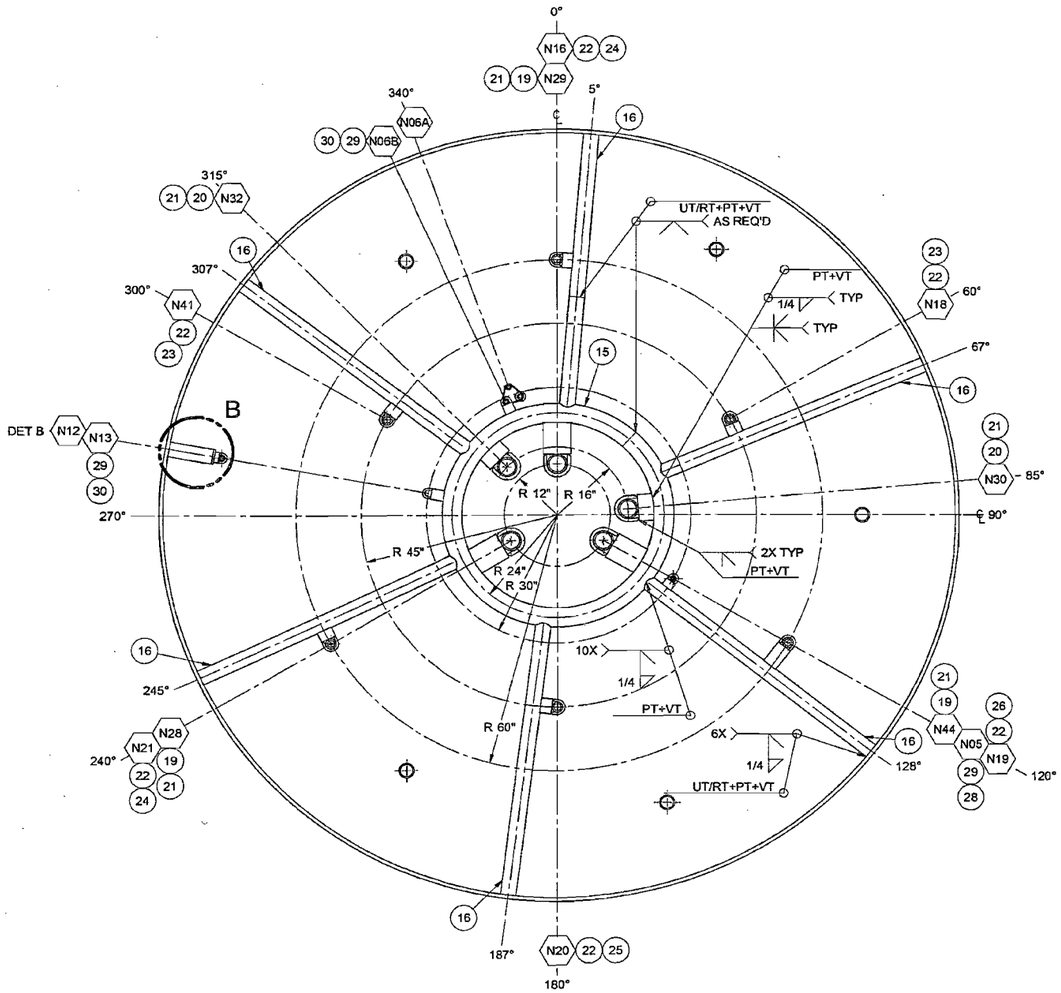

SECTION C-C
SCALE: 1/16

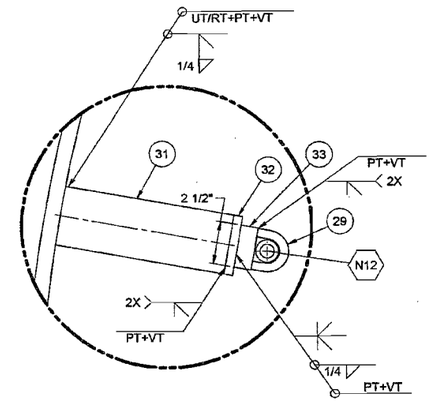

DETAIL-B
SCALE: 1/4

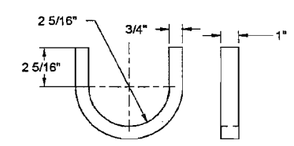

21 GUIDE RING
SCALE: 1/4

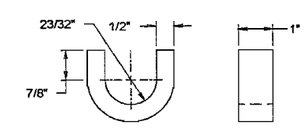

29 GUIDE RING
SCALE: 1/2

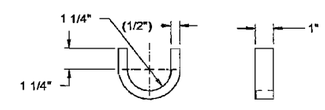

22 GUIDE RING
SCALE: 1/4

24590-PTF-VDCN-MS-10-00009

Attachment 1: Page 7 of 18

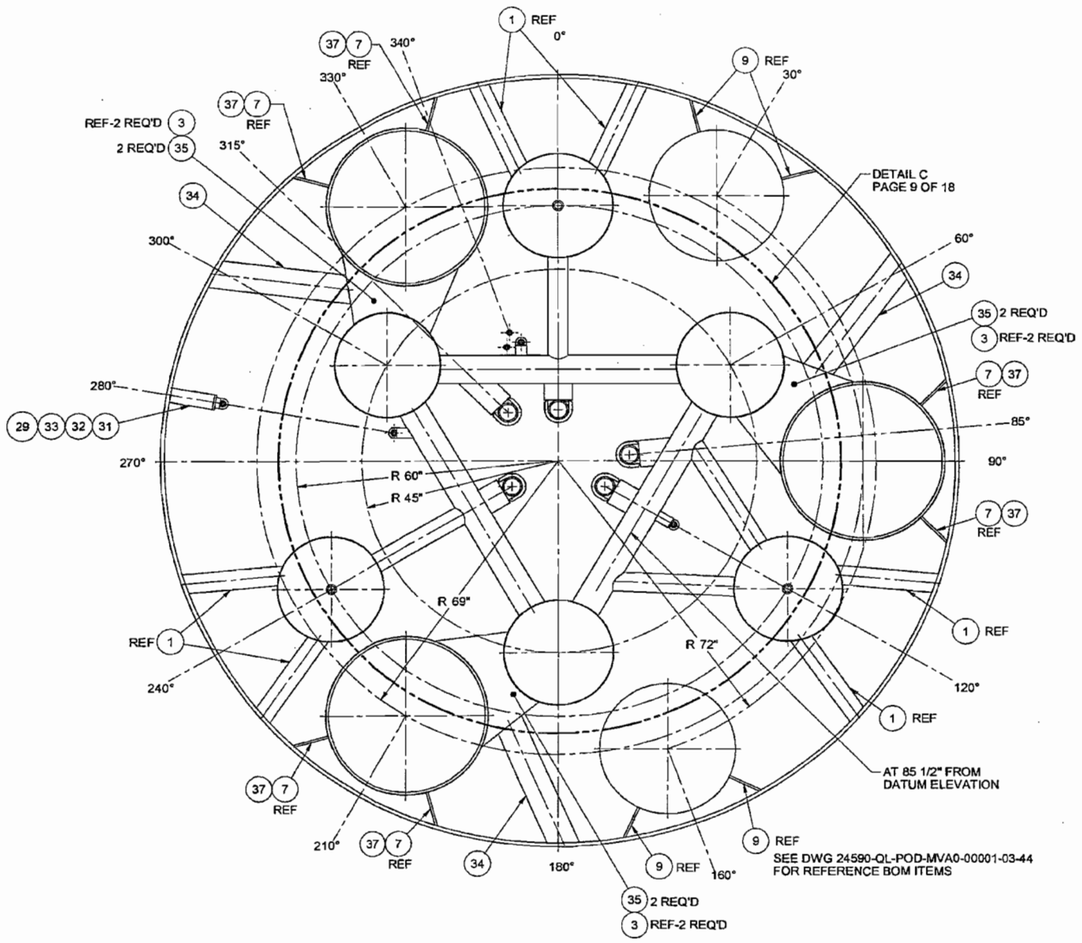

SECTION D-D
SCALE: 1/16

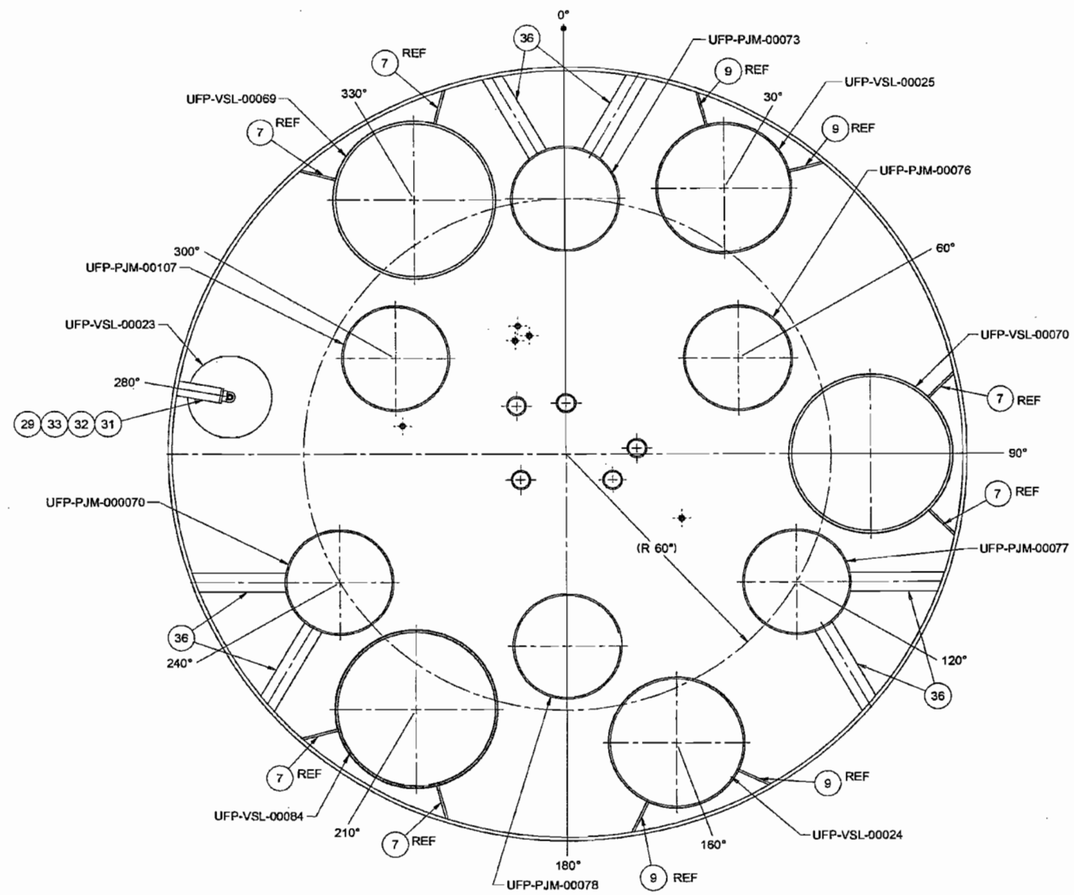

SECTION E-E
SCALE: 1/16

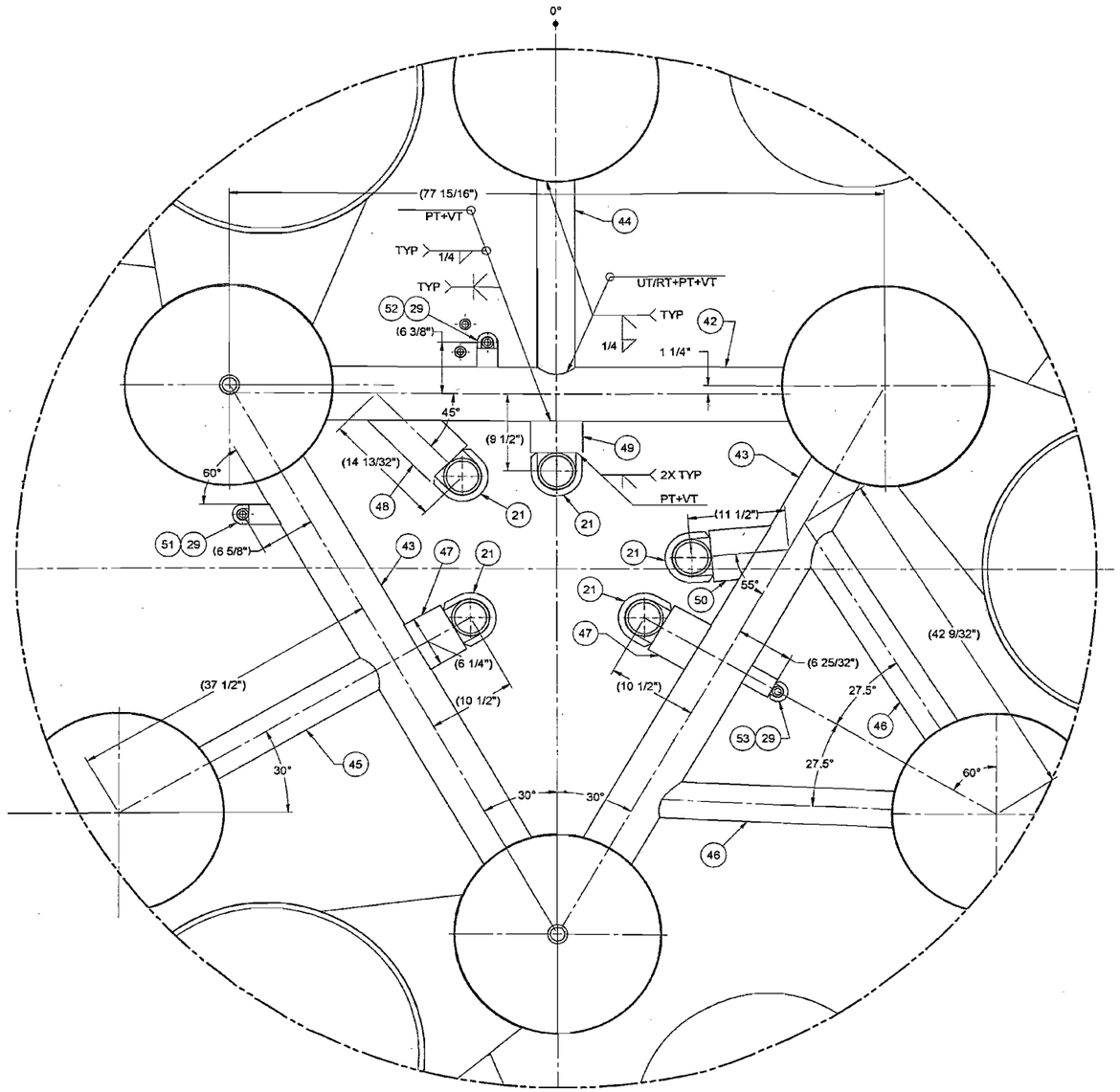

DETAIL-C
SCALE: 1/8

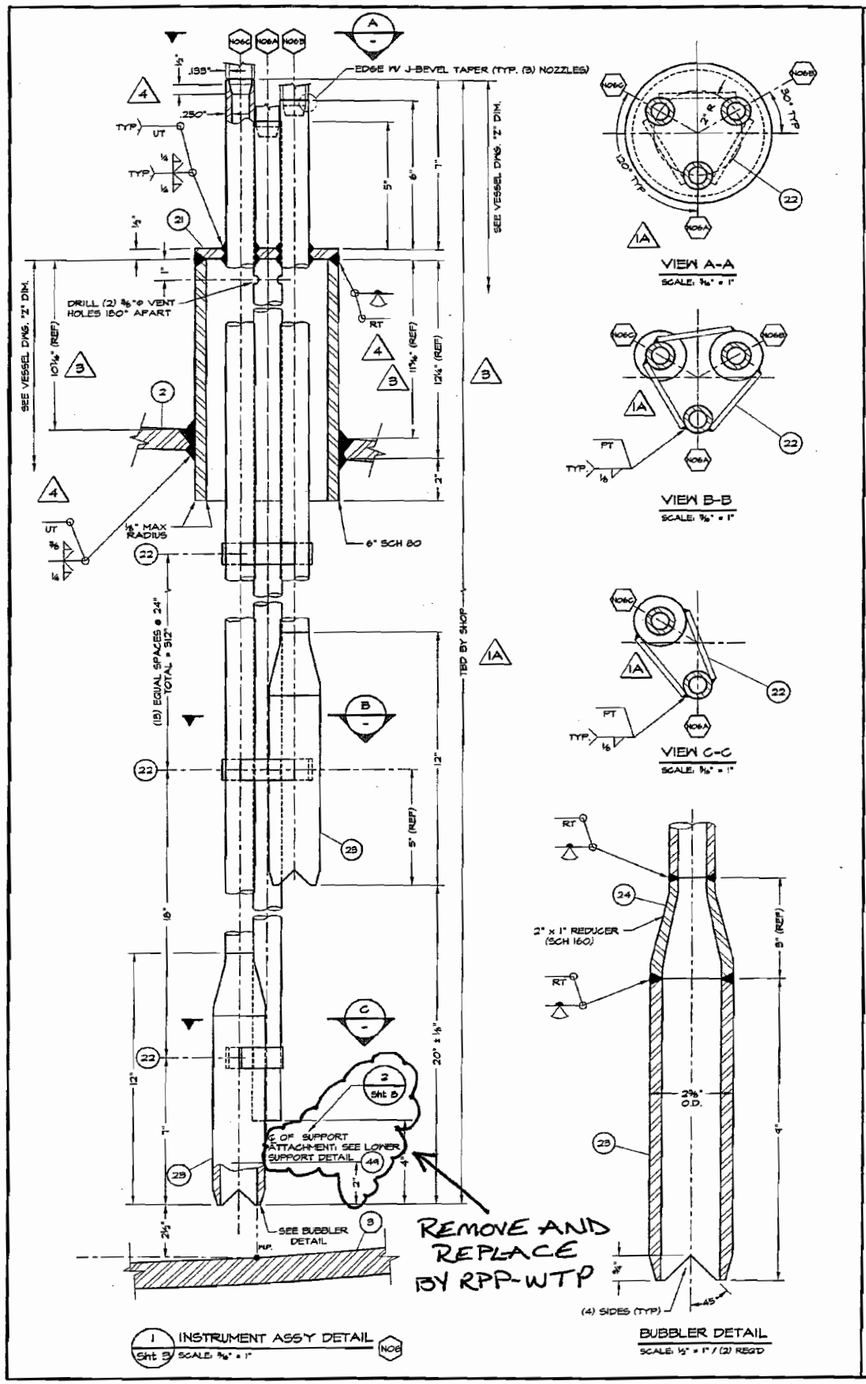

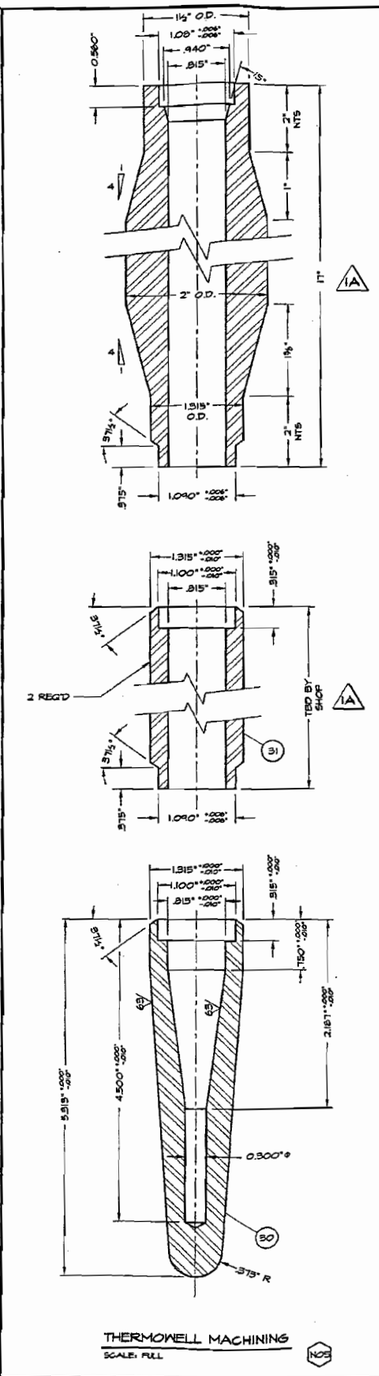

1. ENTIRE OUTER SURFACE TO BE DYE PENETRANT TESTED
2. THE BORE OF THE THERMOWELL POCKET SHALL BE FREE FROM ANY INTERNAL DEBRIS AFTER WELDING TO THE DIP PIPE. THE TOP OF THE DIP PIPE SHALL BE CAPPED OFF ASS SOON AS POSSIBLE AFTER WELDING TO PREVENT INGRESS OF DEBRIS.
3. WELDS INSIDE VESSEL TO PASS HELIUM LEAK TESTING.

* REAM ID TO CORRECT DIAMETER AFTER WELDING TO HEAD.

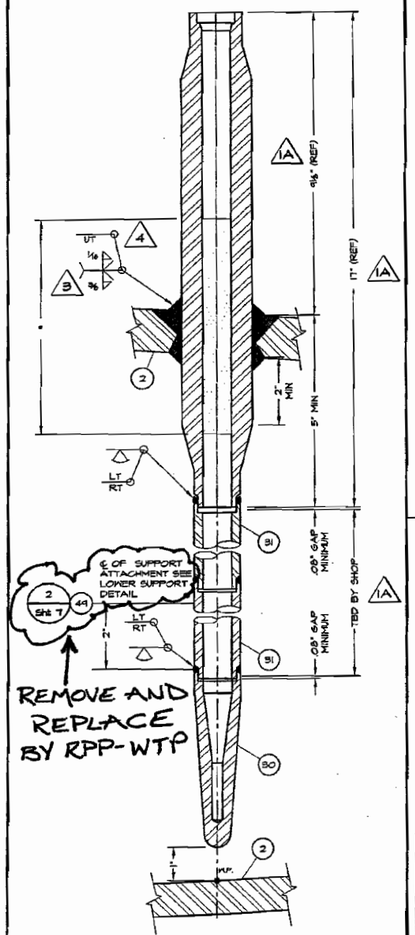

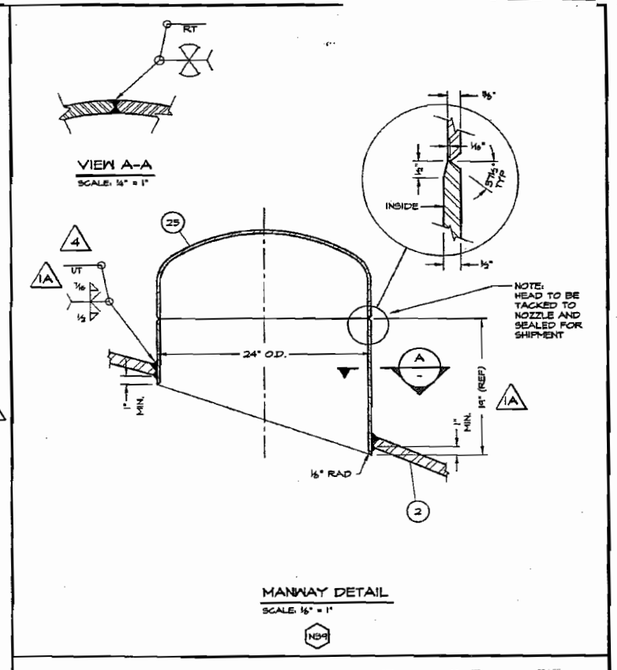

Some information on all page(s) may appear to be illegible, however, the information necessary for assuring adequate design is legible.

#24590-PTF-MV-DPI-VSL-000620
Job No. 24590
Bechtel National, Inc.
SUPPLIER DOCUMENT STATUS
1. [X] Work may proceed.
2. [ ] Revise and resubmit. Work may proceed subject to resolution of indicated comments.
3. [ ] Revise and resubmit. Work may not proceed.
4. [ ] Review not required. Work may proceed.

Permission to proceed does not constitute acceptance or approval of design details, calculations, analyses, test methods, or materials developed or selected by the supplier and does not relieve supplier from full compliance with contractual obligations.

REVIEWED By: M. HGC

G-321 Document Category: 1-3
(From Supplement A to G-321-E (G) or G-321-V (V), as applicable; or "N/A" if SSRLS is used)

Supersedes BNI Document No. _____ Rev. _____
(When applicable)

Approved by: L. KHURANA (Print Name) (Signature) 01/15/06 (Date)

Reviewed by: _____ (When applicable) (Print Name) (Signature) (Date)

R10443759

REVISIONS

NO	DESCRIPTION	REV BY	APD BY	DATE
5	NO CHANGES	SMT	MJV	12/06/04
4	REVISED PER CUSTOMER COMMENTS & ENGINEERING CHANGES	SMT	MJV	11/05/04
3	REVISED PER CUSTOMER COMMENTS & ENGINEERING CHANGES	SMT	MJV	06/08/04
2	REVISED PER CUSTOMER COMMENTS & ENGINEERING CHANGES	MDH	MJV	09/08/03
1A	REVISED PER CUSTOMER COMMENTS & ENGINEERING CHANGES	MDH	MJV	07/18/03
1	DRAWING ADDED	MJV	MDH	04/28/03

NORTHWEST COPPER WORKS, INC.
1303 N. RIVER STREET • PORTLAND, OREGON • 97227

180" I.D. ULTRAFILTER PERMEATE COLLECTION VESSEL NOZZLE DETAILS (1 OF 3)

BECHTEL NATIONAL INC.
3000 George Washington Way
Richland, Washington 99352

EQUIP. NO. UFP-VSL-000620			
P.O. NO. 24590-QL-POD-MVAO-00001 REV 0			
SCALE AS NOTED	JOB NO. 3007	DWG. NO. D-3007	REV 5
DATE 04/28/03	CHKD. BY MJV		
DWN. BY MDH	APPD. BY MDH	SHT. NO. 6 OF 8	

~~REF. DWG 24590-PTF-MV-DPI-000005 REV 03~~
BECHTEL DOC. 24590-QL-POD-MVAO-00001-03-12 REV. 00 E
DELETED BY RPP-WTP 12/21/09

P:\Swap\ACAD\03\D3007-5 Mon Dec 06 10:02:58 2004

Some information on all page(s) may appear to be illegible, however, the information necessary for assuring adequate design is legible.

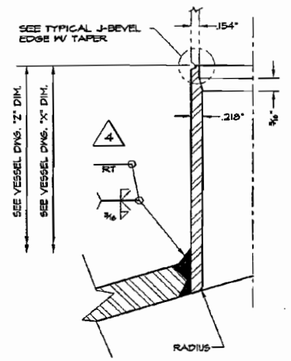

2" SCH 80 FLUSH NOZZLE
SCALE: 3/4" = 1"
N46 2

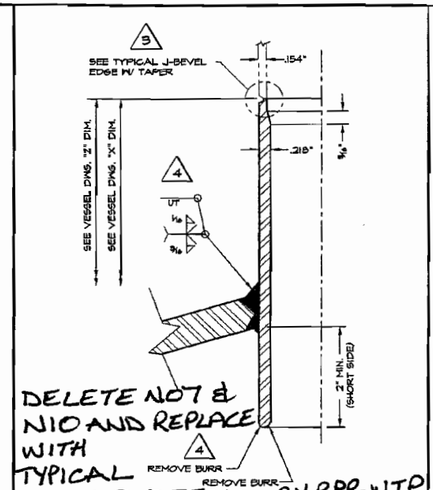

DELETE N07 & N10 AND REPLACE WITH TYPICAL SCH160 DETAIL, BY RPP-WTP

2" SCH 80 NOZZLE W/ INT. PROJECTION
SCALE: 3/4" = 1"
~~N07~~ ~~N09~~ ~~N10~~ N11 N14 2 3

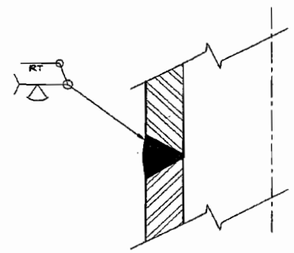

TYPICAL CIRCULAR WELD ON DIP TUBE
NO SCALE

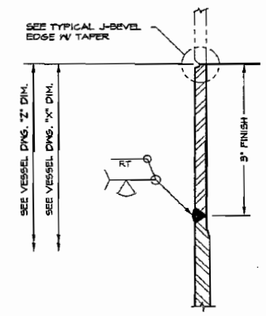

NOZZLE STUB SPLICE
SCALE: 3/4" = 1"
N18 4

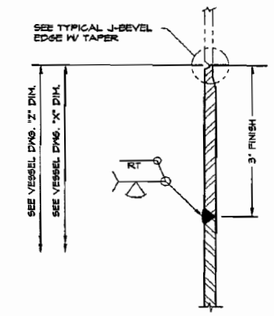

NOZZLE STUB SPLICE
SCALE: 3/4" = 1"
N30 4

REMOVE ITEM 49 FOR N05 & N06 ONLY. BY RPP-WTP

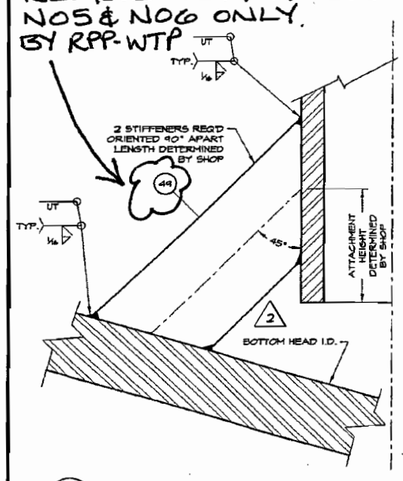

2 / - TYP. LOWER SUPPORT FOR DIP TUBES
NO SCALE

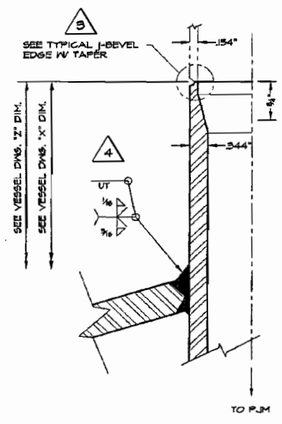

2" SCH 160 INLET TO INTERNALS
SCALE: 3/4" = 1"
N16 N18 N19 N20 N21 N41

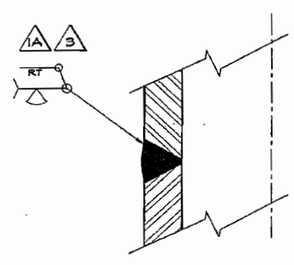

TYP. CIRC. WELD ON INLET TO INTERNALS
NO SCALE

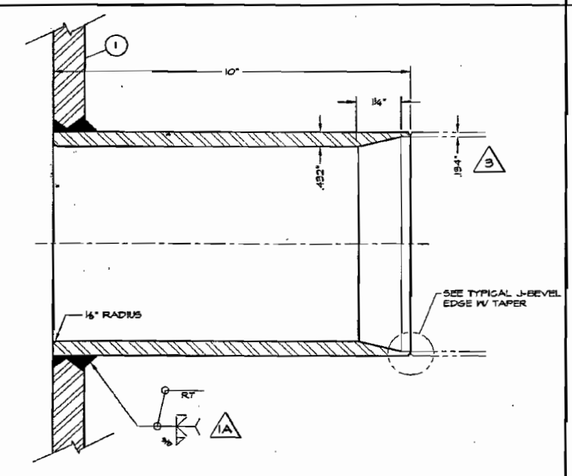

6" SCH 80 OVERFLOW NOZZLE THRU SHELL
SCALE: 1/2" = 1"
N37

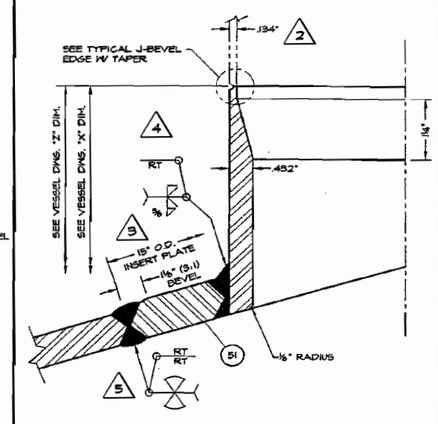

6" SCH 80 FLUSH NOZZLE
SCALE: 3/4" = 1"
N22

R10443781

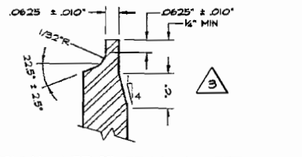

TYPICAL J-BEVEL EDGE W/ TAPER
SCALE: NONE

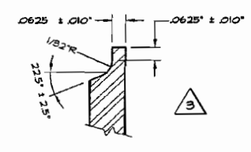

TYPICAL J-BEVEL EDGE W/O TAPER
SCALE: NONE

24590-PTF-MV-VFP-VSL-000620
Job No. 34390
Bechtel National, Inc.
SUPPLIER DOCUMENT STATUS
1. ☑ Work may proceed.
2. ☐ Revise and resubmit. Work may proceed subject to resolution of indicated comments.
3. ☐ Revise and resubmit. Work may not proceed.
4. ☐ Review not required. Work may proceed.
Permission to proceed does not constitute acceptance or approval of design details, calculations, analyses, test methods, or materials developed or selected by the supplier and does not relieve supplier from full compliance with contractual obligations.
REVIEWED H HK
G-321 Document Category 1-3
(From Supplement A to G-321-E (II) or G-321-V (V), as applicable, or "N/A" if SBLS is used)
Supersedes BNS Document No. Rev.
(When applicable)
Accepted by H. KHURANA 01/13/05
Released by
(When applicable)

REVISIONS

NO	DESCRIPTION	REV BY	APD BY	DATE
5	UPDATED NOZZLE N22 RADIOGRAPHY REQUIREMENTS	SMT	MJV	12/06/04
4	REVISED PER CUSTOMER COMMENTS & ENGINEERING CHANGES	SMT	MJV	11/05/04
3	REVISED PER CUSTOMER COMMENTS & ENGINEERING CHANGES	SMT	MJV	08/09/04
2	REVISED PER CUSTOMER COMMENTS & ENGINEERING CHANGES	MDH	MJV	09/09/03
1A	REVISED PER CUSTOMER COMMENTS & ENGINEERING CHANGES	MDH	MJV	07/16/03
1	DRAWING ADDED	MJV	MDH	04/28/03

NORTHWEST COPPER WORKS, INC.
1303 N. RIVER STREET • PORTLAND, OREGON • 97227

180" I.D. ULTRAFILTER PERMEATE COLLECTION VESSEL NOZZLE DETAILS (3 of 3)

BECHTEL NATIONAL INC.
3000 George Washington Way
Richland, Washington 99352

EQUIP. NO. UFP-VSL-000620
P.O. NO. 2690-QL-POD-MVAO-00003 REV 0

SCALE AS NOTED	JOB NO. 3007	DWG. NO. D-3007	REV 5
DATE 04/28/03	CHKD. BY MJV		
DWN. BY MDH	APPD. BY MDH	SHT. NO. 8 OF 8	

~~REF. DWG. 24590-PTF-MV-VFP-00065 REV 0~~
BECHTEL DOC. 24590-QL-POD-MVAO-00001-03-14 REV. 00 DELETED BY RPP-WTP

P:\Swap\ACAD\03\03007-5 Mon Dec 06 10:02:38 2004

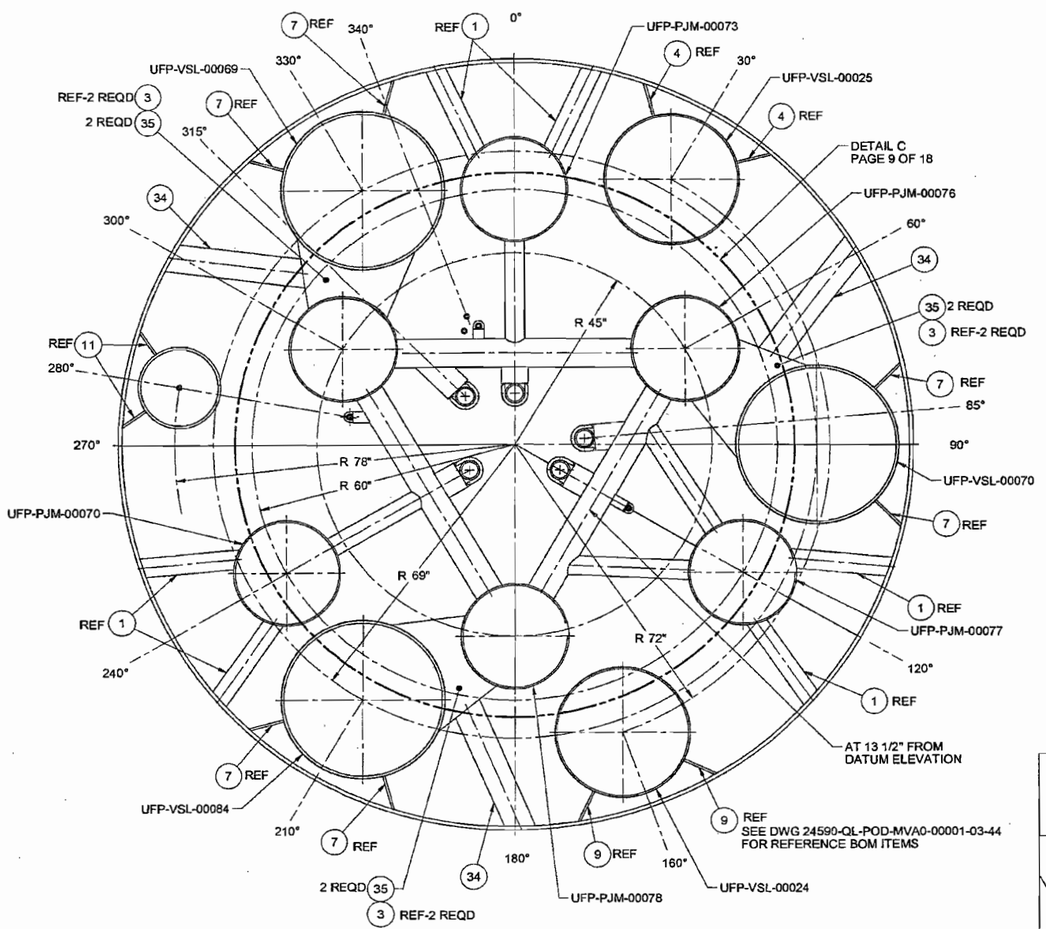

SECTION F-F
SCALE: 1/16

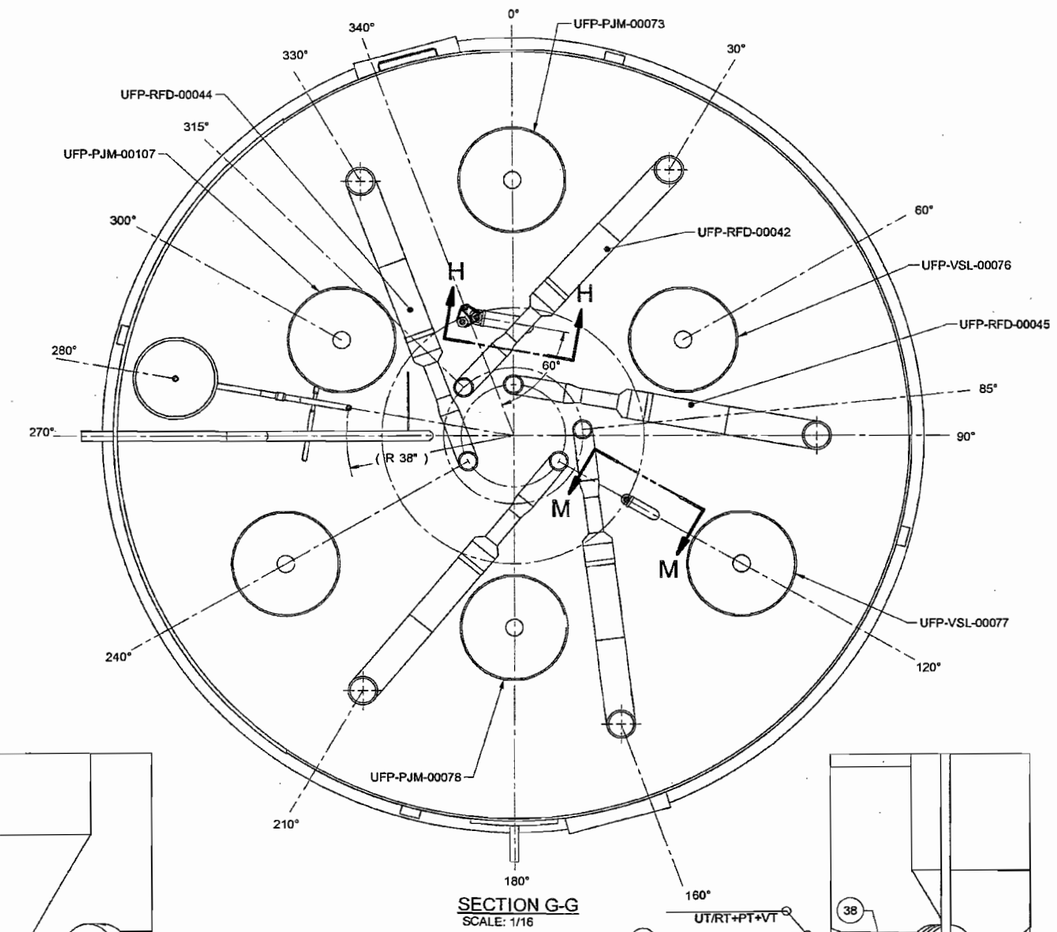

SECTION G-G
SCALE: 1/16

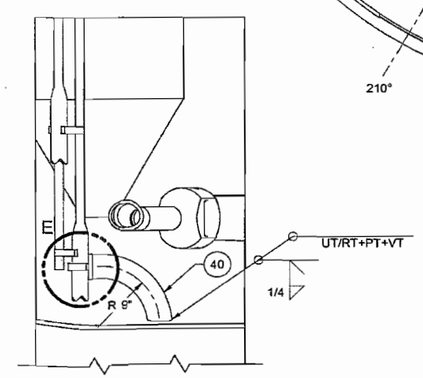

SECTION H-H
SCALE: 1/10

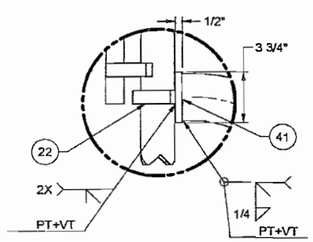

DETAIL-E
SCALE: 1/5

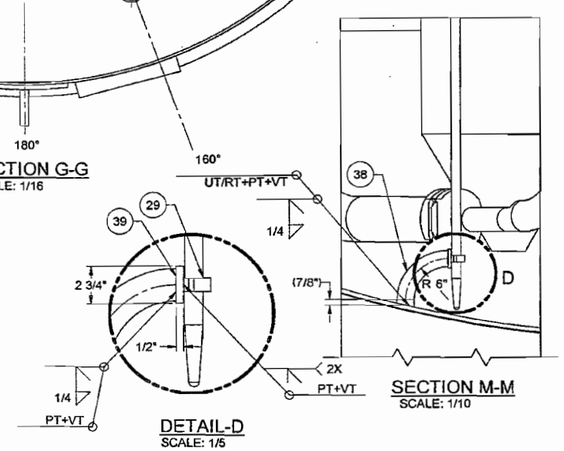

DETAIL-D
SCALE: 1/5

SECTION M-M
SCALE: 1/10

DELETE AND REPLACE BY RPP-WTP

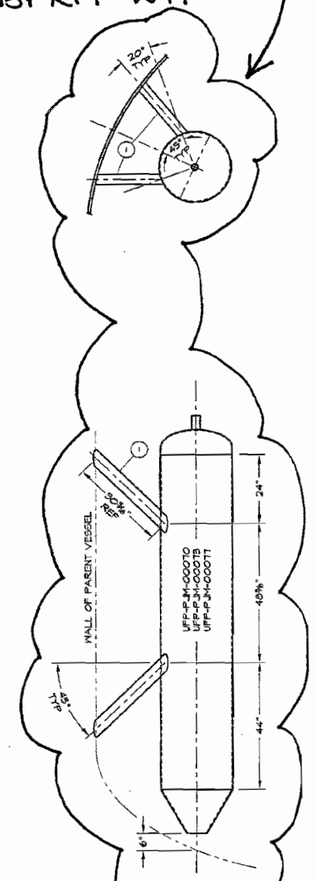

TYPICAL OUTER PJM PIPE SUPPORT
SCALE: ½" = 1'-0"

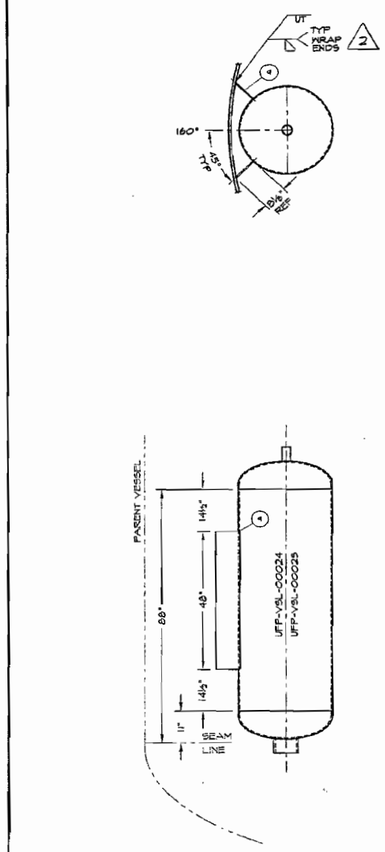

30" CHARGE VESSEL
SCALE: ½" = 1'-0"

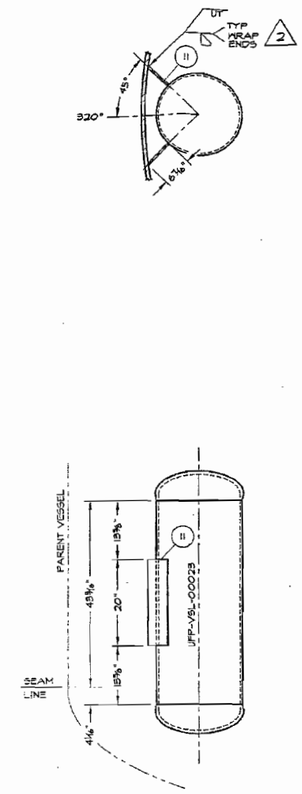

18" CHARGE VESSEL
SCALE: ⅜" = 1'-0"

DELETE AND REPLACE BY RPP-WTP

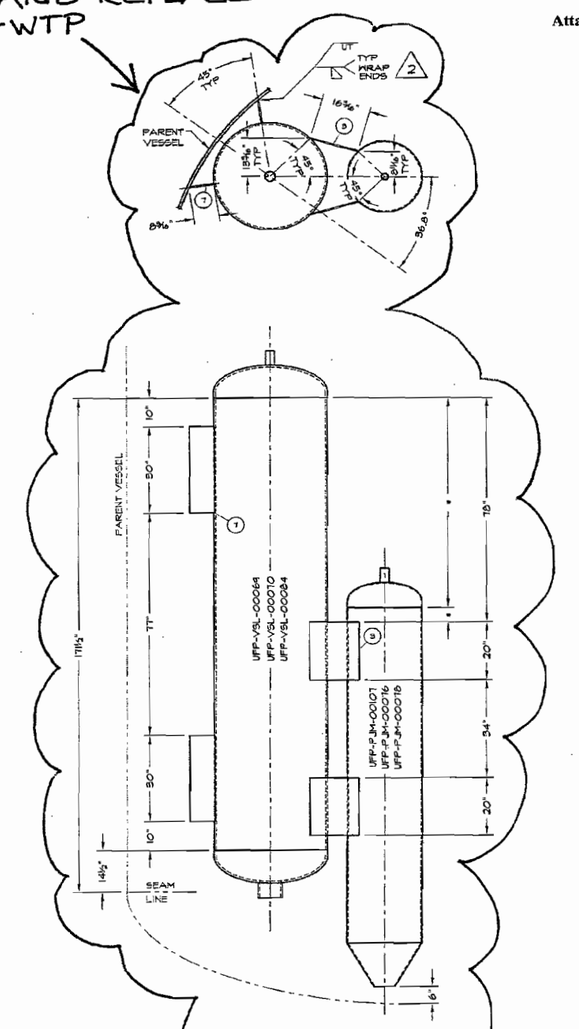

* TO BE DETERMINED BY SHOP AFTER PULSE JET MIXER LOCATED 6" ABOVE PARENT VESSEL HEAD

36" CHARGE VESSEL & INNER PJM SUPPORT
SCALE: ½" = 1'-0"

Some information on all page(s) may appear to be illegible, however, the information necessary for assuring adequate design is legible.

24590-PTF-MV-UFP-VSL-00062C
Bechtel National, Inc.
SUPPLIER DOCUMENT STATUS
1. ☒ Work may proceed.
2. ☐ Revise and resubmit. Work may proceed subject to resolution of indicated comments.
3. ☐ Revise and resubmit. Work may not proceed.
4. ☐ Review not required. Work may proceed.
Furnishing a proposal does not constitute acceptance or approval of design details, calculations, analyses, test methods, or materials developed or selected by the supplier and does not relieve supplier from full responsibility for contractual obligations.
REVIEWED: HB
G-321 Document Category: 1.3
[Procn Specifications A or G-321-E (E) or G-321-V (V), as applicable, or "N/A" if SSRS is used]
Appendix B(N) Document No. _____ Rev. _____
[When applicable]
Assigned by: Hardish M (Print Name) (Signature) 08/06/03 (Date)
Reviewed by: [When applicable] (Print Name) (Signature) (Date)

REVISIONS

NO	DESCRIPTION	REV BY	APD BY	DATE
2	REVISED PER ENGINEERING CHANGES	SMT	MDH	08/08/03
1	REVISED PER CUSTOMER COMMENTS	MJV	MDH	04/08/03

NORTHWEST COPPER WORKS, INC.
1303 N. RIVER STREET * PORTLAND, OREGON * 97227

180" I.D. ULTRAFILTER PERMEATE VESSEL INTERNAL SUPPORT

BECHTEL NATIONAL INC.
3000 George Washington Way
Richland, Washington 99352

EQUIP. NO. UFP-VSL-00062C
P.O. NO. 24590-QL-POD-MVAO-00001 REV 0
SCALE AS NOTED
JOB NO. 3007F
DWG. NO. D-3007F
REV 2
DATE 08/06/03
CHKD. BY MDH
DWN. BY MDH
APPD. BY MJV
SHT. NO. 2 OF 2

BECHTEL DOC. No. 24590-QL-POD-MVAO-00001-03-45 REV. 00B
PCD 8/16/04

R10353786

P:\Swap\ACAD\03\D3007F-2.dwg, 7/16/2004 9:05:49 AM

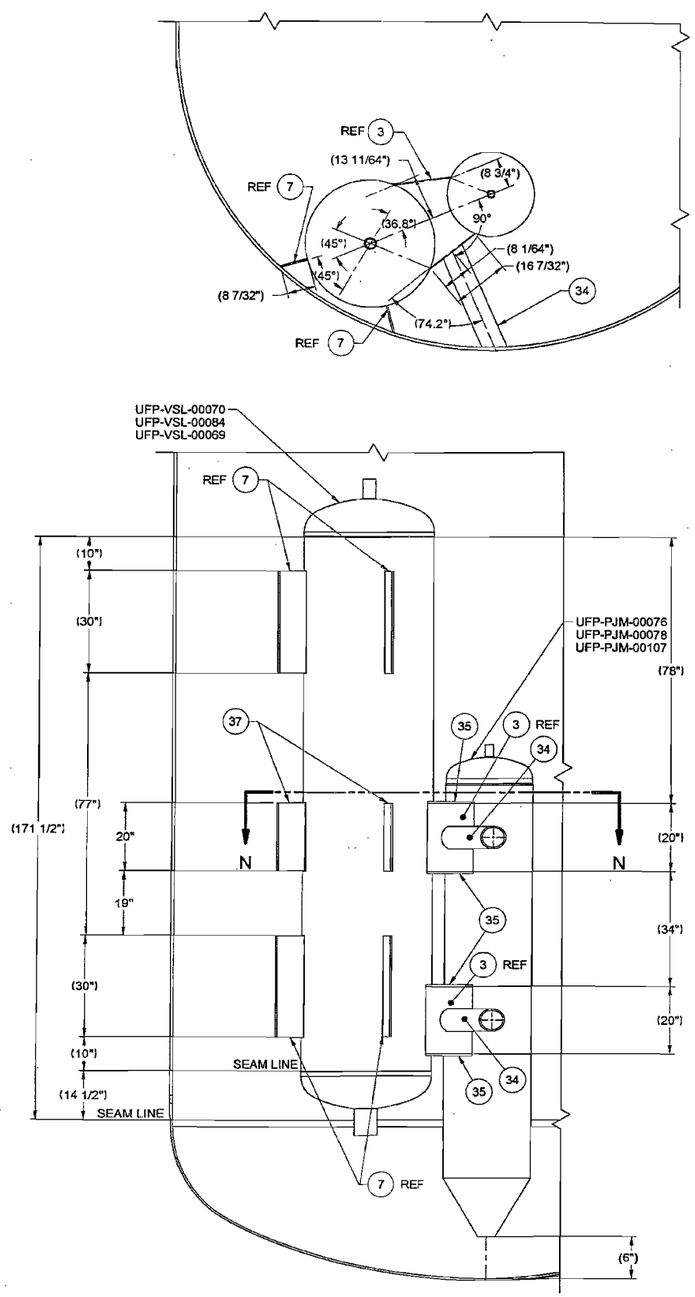

36" CHARGE VESSEL & INNER PJM SUPPORT
SCALE: 1/20
SEE DWG 24590-QL-POD-MVA0-00001-03-45
FOR REFERENCE BOM ITEMS

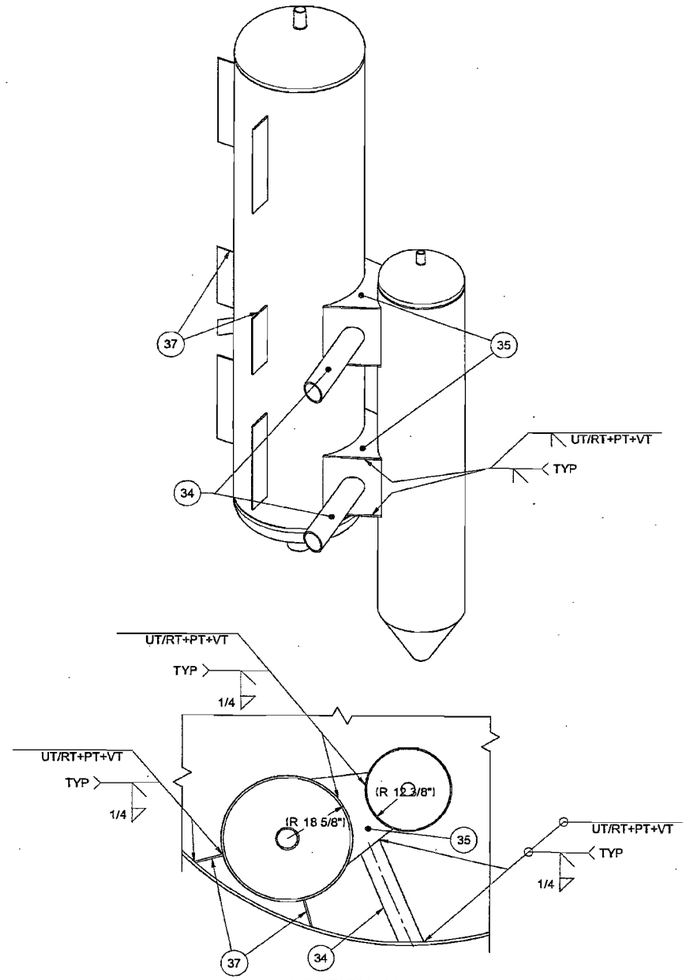

SECTION N-N
SCALE: 1/20

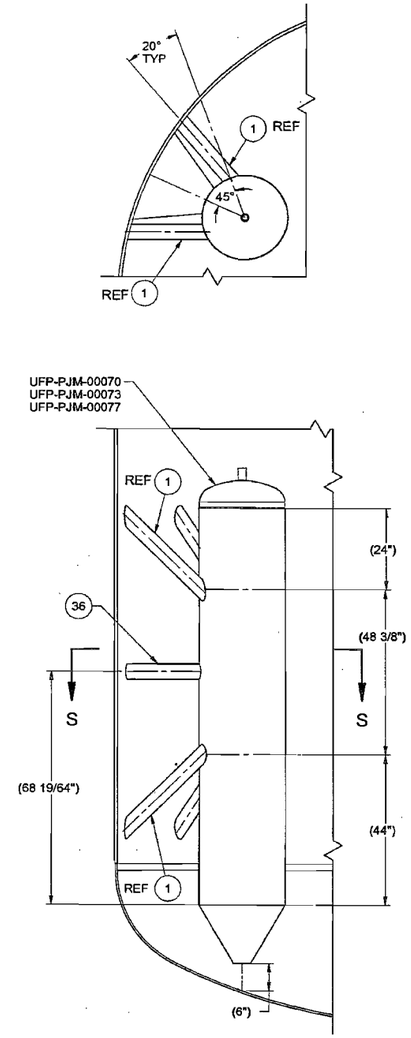

TYPICAL OUTER PJM SUPPORT
SCALE: 1/20
SEE DWG 24590-QL-POD-MVA0-00001-03-45
FOR REFERENCE BOM ITEMS

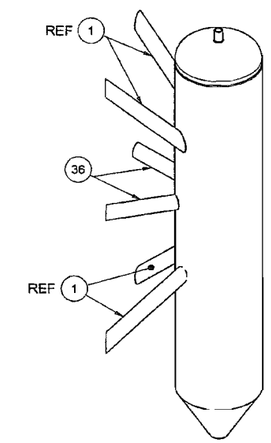

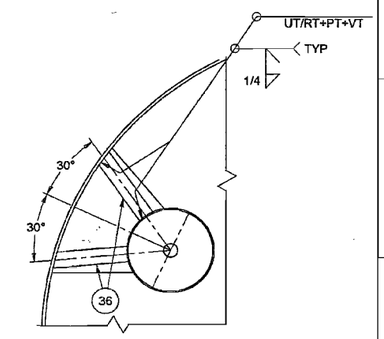

SECTION S-S
SCALE: 1/20

24590-PTF-MV-UFP-VSL-000620
Bechtel National, Inc.
SUPPLIER DOCUMENT STATUS
1. [X] Work may proceed.
2. [ ] Revise and resubmit. Work may proceed subject to resolution of indicated comments.
3. [ ] Revise and resubmit. Work may not proceed.
4. [ ] Review not required. Work may proceed.
Permission to proceed does not constitute acceptance or approval of design details, calculations, analyses, and methods, or materials developed or selected by the supplier and does not relieve supplier from full compliance with contractual obligations.
REVIEWED BY
G-321 Document Category (from Supplement A to G-321-R (R) or G-321-V (V), as applicable, or "N/A" if SQRS is used) 1-3
Supplier DCN Document No. (when applicable)
Accepted by R. KHUSANA Date 06/20/05
Released by (when applicable) Date

P:\Swap\ACAD\03\D3007-7 prelim.dwg, 6/20/2005 4:13:55 PM

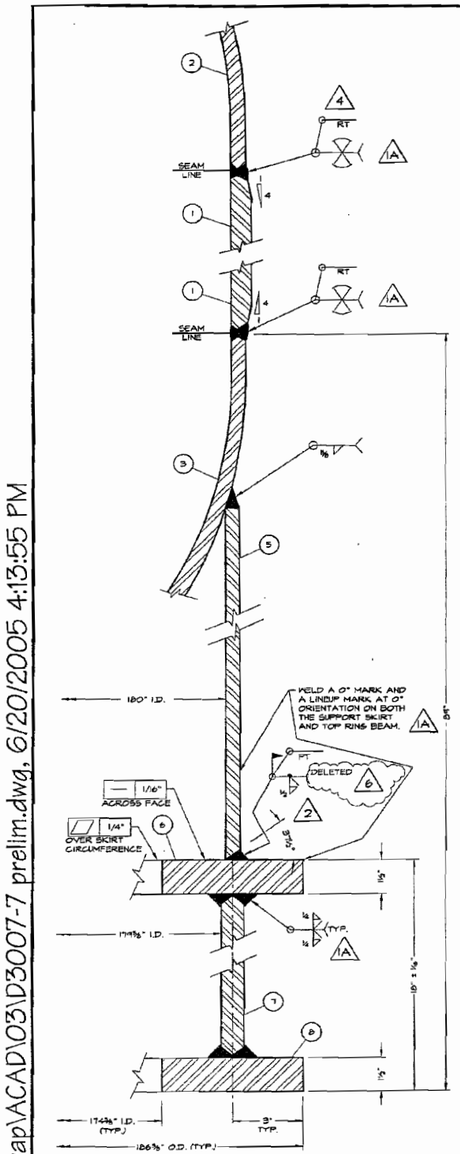

VESSEL SKIRT AND CROSS-SECTION
SCALE: ⅜" = 1"

ULTRASONICALLY EXAMINE 100% OF AREA UNDERNEATH AND 5" BEYOND PERIMETER OF TAILING LUG GUSSET TO HEAD FILLET WELD. EXAMINE 100% OF TAILING LUG GUSSET TO HEAD FILLET WELD. LIFTING LUG AND DOUBLER TO MATCH CONTOUR OF TANK

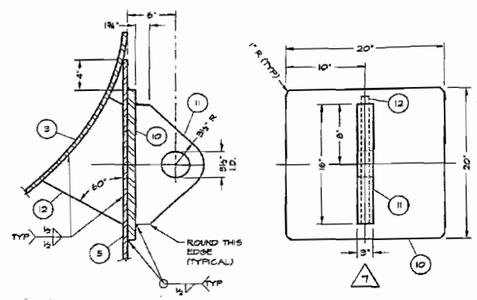

TAILING LUG DETAIL
SCALE: ½" = 1"

ULTRASONICALLY EXAMINE 100% OF AREA UNDERNEATH AND 5" BEYOND PERIMETER OF REINFORCEMENT FILLET WELD. EXAMINE 100% OF REINFORCEMENT FILLET WELD.

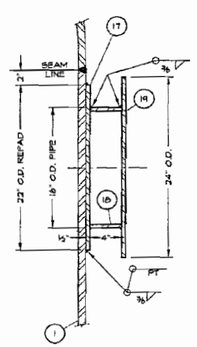

LIFTING TRUNNION DETAIL
SCALE: ½" = 1"

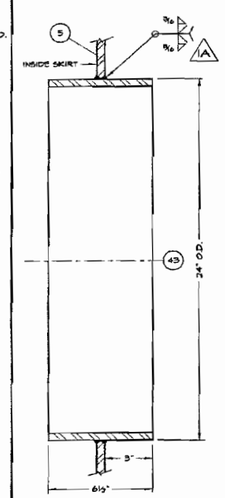

24" SKIRT ACCESS DETAIL
SCALE: ½" = 1" / (2) REQD

TYP. SHELL LONG. WELD
SCALE: ½" = 1"

TYP. SKIRT/RING BEAM LONG. WELD
NO SCALE

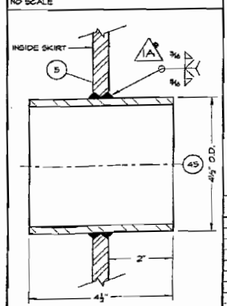

4" SKIRT VENT DETAIL
SCALE: ½" = 1" / (4) REQD

REMOVE BY RPP-WTP

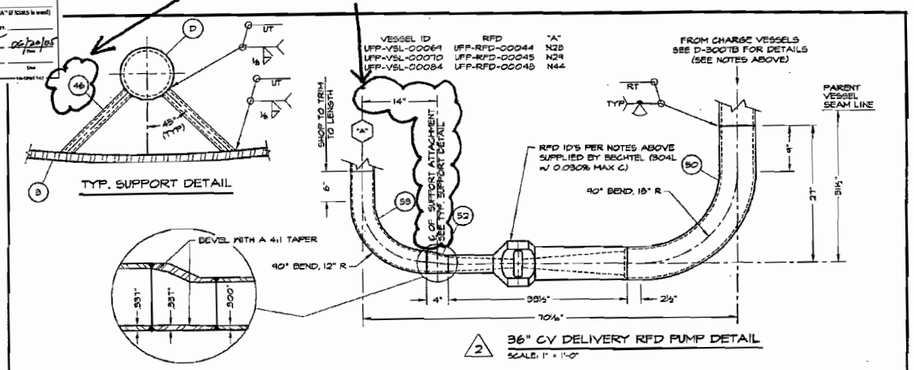

36" CV DELIVERY RFD PUMP DETAIL
SCALE: 1" = 1'-0"

REMOVE BY RPP-WTP

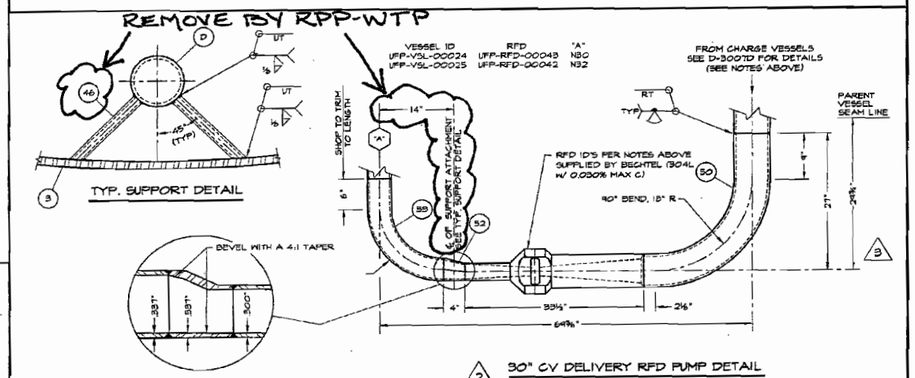

30" CV DELIVERY RFD PUMP DETAIL
SCALE: 1" = 1'-0"

REMOVE BY RPP-WTP

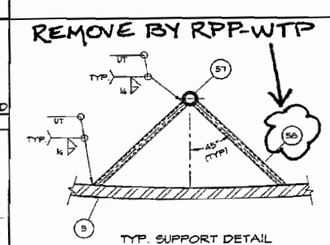

SAMPLER RFD PUMP DETAIL
SCALE: 1½" = 1'-0"

DELETED BY RPP-WTP

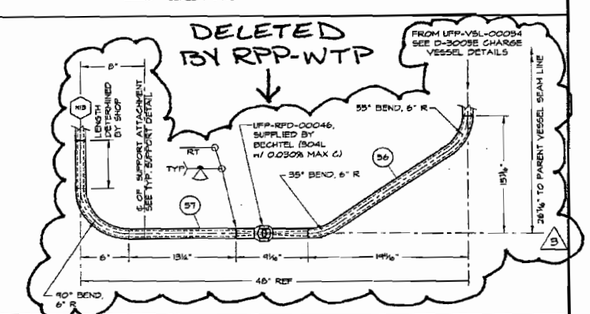

REVISIONS

NO	DESCRIPTION	REV BY	APD BY	DATE
7	UPDATED TAILING LUG DETAIL	RJG	MJV	06/20/05
6	DELETED FIELD WELD PROCEDURE DESIGNATION	RJG	MJV	05/30/05
5	NO CHANGES	BHT	MJV	12/06/04
4	REVISED PER CUSTOMER COMMENTS AND ENGINEERING CHANGES	SHT	MJV	11/05/04
3	REVISED PER CUSTOMER COMMENTS AND ENGINEERING CHANGES	SHT	MJV	06/02/04
2	REVISED PER CUSTOMER COMMENTS AND ENGINEERING CHANGES	MDH	MJV	09/02/03
1A	REVISED PER CUSTOMER COMMENTS AND ENGINEERING CHANGES	MDH	MJV	07/18/03
1	DRAWING ADDED	MJV	MDH	04/29/03

NORTHWEST COPPER WORKS, INC.
1303 N. RIVER STREET • PORTLAND, OREGON • 97227

180" I.D. ULTRAFILTER PERMEATE COLLECTION VESSEL DETAILS

BECHTEL NATIONAL INC. 3000 George Washington Way Richland, Washington 99352		EQUIP. NO.	UFP-VSL-000620
		P.O. NO.	24590-QL-POD-MVAO-00001 REV 0
SCALE AS NOTED	JOB NO. 3001	DWG. NO. D-3007	REV 7
DATE 04/28/03	CHKD. BY MJV		
DWN. BY MDH	APPD BY MDH	SHT. NO. 4 OF 8	

~~REF. DWG 24590-PTF-M-UFP-00005 REV 0~~
BECHTEL DOC 24590-QL-POD-MVAO-00001-03-10 REV. 00
DELETED BY RPP-WTP

BILL OF MATERIALS					
MK	THICK/SIZE	MATERIAL	HEAT NO.	DESCRIPTION	QTY
59	1" Ø	SA 479 TYPE 316		BAR	2
60	1" SCHED 160S	SA 312 TP 316/316L 0.030% MAX C		SMLS PIPE, OFFSET	1

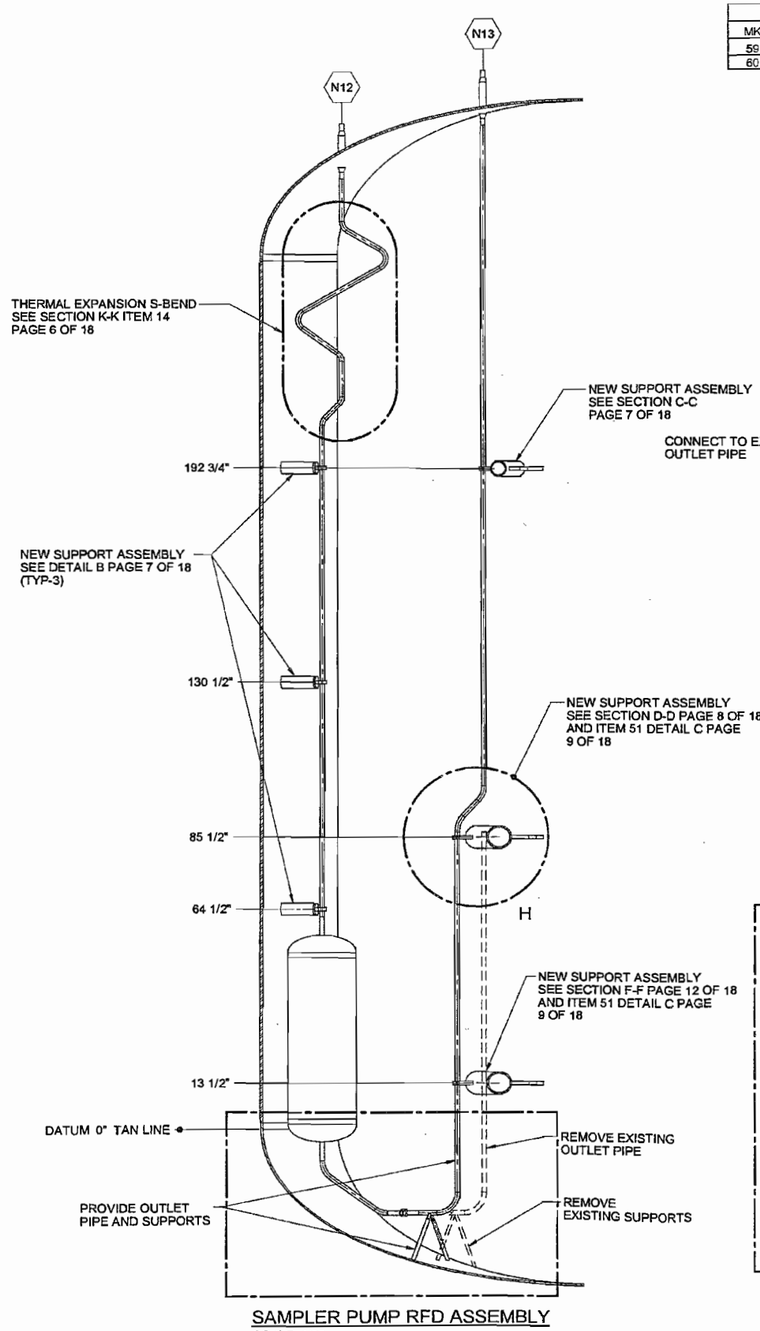

SAMPLER PUMP RFD ASSEMBLY
SCALE: 1/20
SEE DWG 24590-QL-POD-MVA0-00001-03-10
FOR REFERENCE BOM ITEMS

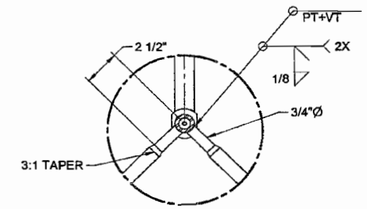

DETAIL J
SCALE: 1/5

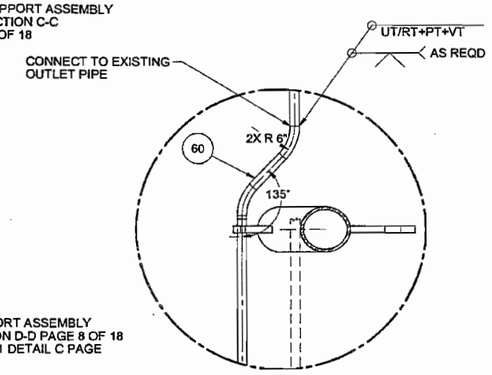

DETAIL H
SCALE: 1/10

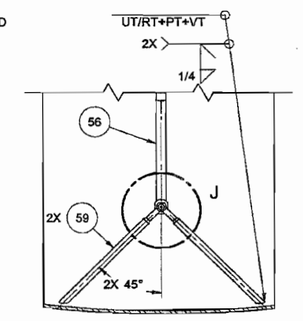

SECTION R-R
SCALE: 1/10

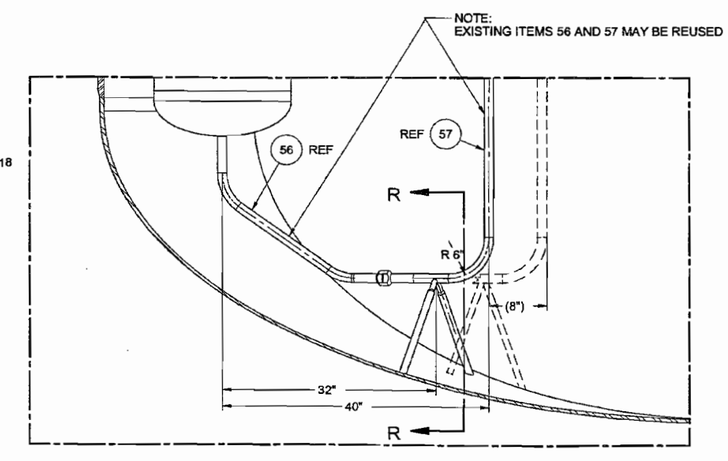

SAMPLER PUMP RFD DETAIL
SCALE: 1/10

Some information on all page(s) may appear to be illegible, however, the information necessary for assuring adequate design is legible.

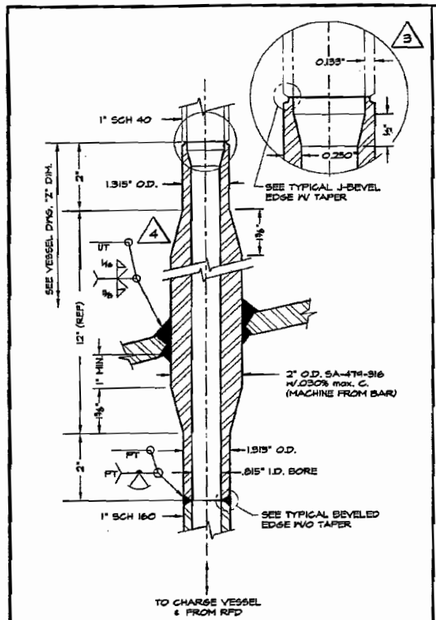

2" MACHINED BAR NOZZLE TO INTERNALS
SCALE: ½" = 1"
N12 N13 2

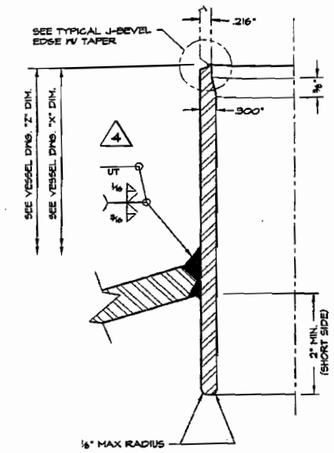

3" SCH 80 NOZZLE W/ INT. PROJECTION
SCALE: ¾" = 1"
N40 2

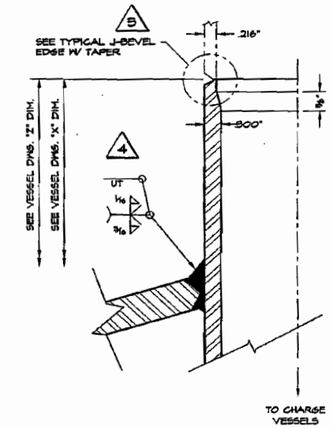

3" SCH 80 INLET TO INTERNALS
SCALE: ¾" = 1"
N25 N24 N25 N26 N45

3U590-PTF-MV-UFP-VSL-000620
Job No. 24590
Bechtel National, Inc.
SUPPLIER DOCUMENT STATUS
1. ☒ Work may proceed.
2. ☐ Revise and resubmit. Work may proceed subject to resolution of indicated comments.
3. ☐ Revise and resubmit. Work may not proceed.
4. ☐ Review not completed. Work may proceed.
Permission to proceed does not constitute acceptance or approval of design details, calculations, analyses, test methods, or materials developed or selected by the supplier and does not relieve supplier from full compliance with contractual obligations.
REVIEWED By M MK
1-3
(I-321 Document Category)
(From Supplement A to G-321-E (E) or G-321-V (V), as applicable, or "N/A" if SDS3 is used)
Superseded KM Document No. _____ Rev. _____
(When applicable)
Accepted by H. KHUANM 01/13/05
Released by (When applicable) _____

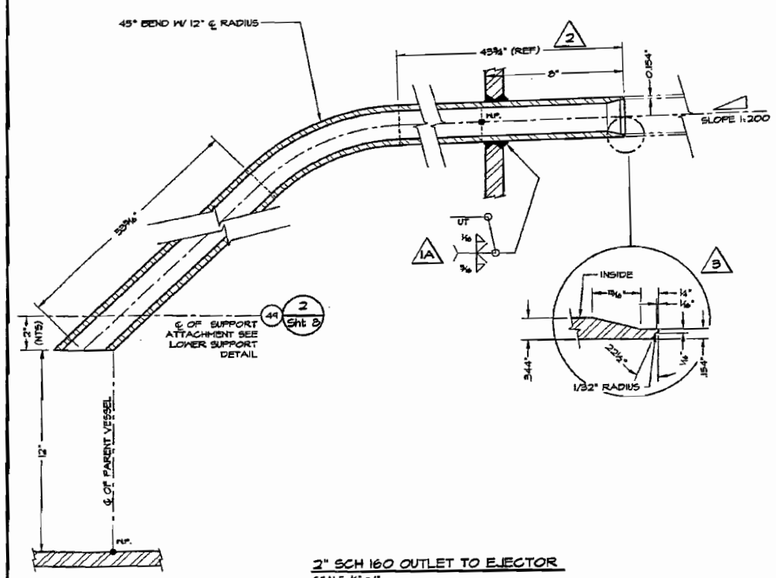

2" SCH 160 OUTLET TO EJECTOR
SCALE: ½" = 1"
N17

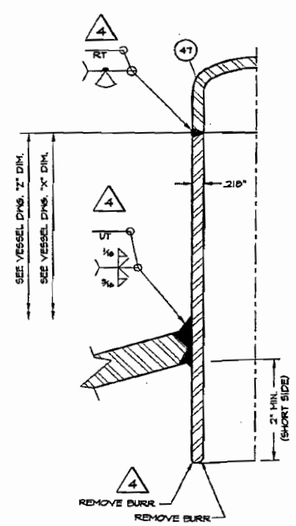

2" SCH 80 CAPPED NOZZLE W/ INT. PROJECTION
SCALE: ¾" = 1"
N38 2

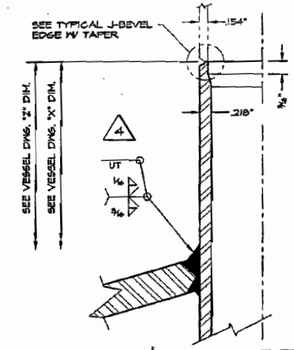

DELETE N34 AND REPLACE WITH TYPICAL SCH160 NOZZLE DETAIL (REF SECTION Q-Q) BY RPP-WTP

2" SCH 80 INLET TO INTERNALS
SCALE: ¾" = 1"
~~N34~~ N35 N36

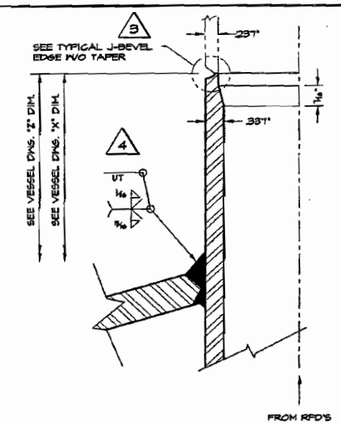

4" SCH 80 OUTLET FROM INTERNALS
SCALE: ¾" = 1"
N28 N29 N30 N31 N44

R10443790

REVISIONS

NO	DESCRIPTION	REV BY	APD BY	DATE
5	NO CHANGES	SMT	MJV	12/06/04
4	REVISED PER CUSTOMER COMMENTS & ENGINEERING CHANGES	SMT	MJV	11/03/04
3	REVISED PER CUSTOMER COMMENTS & ENGINEERING CHANGES	SMT	MJV	08/03/04
2	REVISED PER CUSTOMER COMMENTS & ENGINEERING CHANGES	MDH	MJV	04/03/03
1A	REVISED PER CUSTOMER COMMENTS & ENGINEERING CHANGES	MDH	MJV	07/18/03
1	DRAWING ADDED	MJV	MDH	04/28/03

NORTHWEST COPPER WORKS, INC.
1503 N. RIVER STREET • PORTLAND, OREGON • 97227

180" I.D. ULTRAFILTER PERMEATE COLLECTION VESSEL NOZZLE DETAILS (2 OF 3)

BECHTEL NATIONAL INC.
3000 George Washington Way
Richland, Washington 99352

EQUIP. NO. UFP-VSL-000620
P.O. NO. 24590-QL-POD-MVAO-00001 REV 0

SCALE: AS NOTED
JOB NO. 3007
DWG. NO. D-3007
REV 5
DATE 04/28/03
CHKD. BY MJV
DWN. BY MDH
APPD. BY MDH
SHT. NO. 7 OF 8

~~REF. DWG 24590-PTF-MV-UFP-000005 REV 0~~
BECHTEL DOC. 24590-QL-POD-MVAO-00001-03-13 REV. 00B
DELETED BY RPP-WTP

P:\Swp\ACAD\03\D3007-5 Mon Dec 06 10:02:47 2004

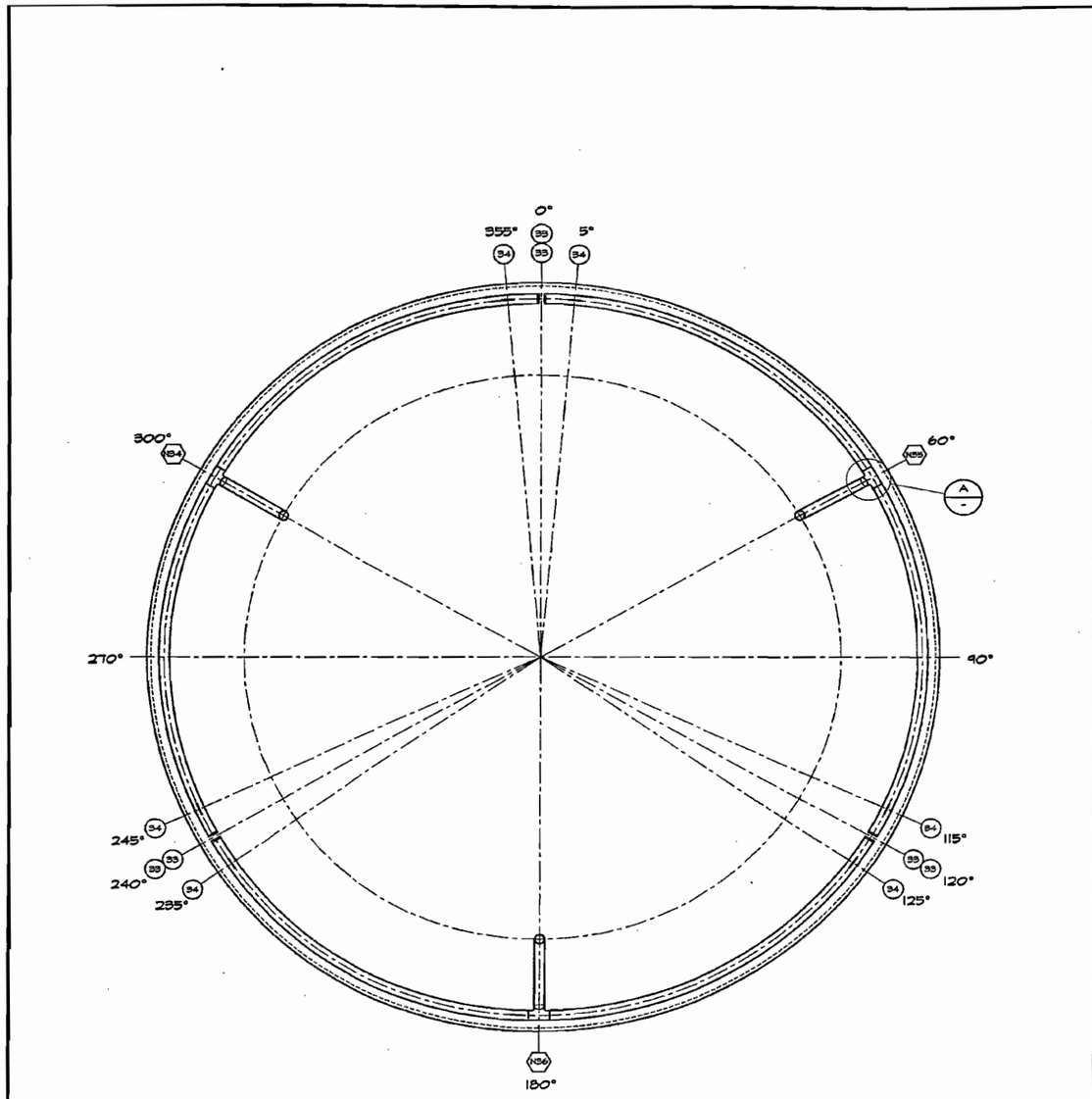

Some information on all page(s) may appear to be illegible, however, the information necessary for assuring adequate design is legible.

WASH RING ORIENTATION
SCALE: 3/8" = 1'-0"

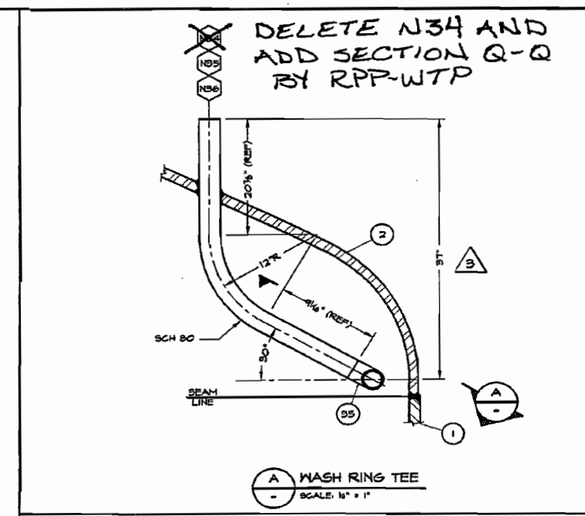

A WASH RING TEE
SCALE: 1/4" = 1"

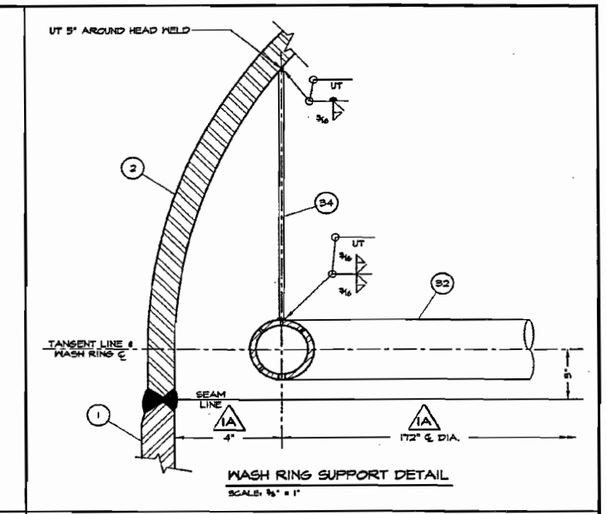

WASH RING SUPPORT DETAIL
SCALE: 3/8" = 1"

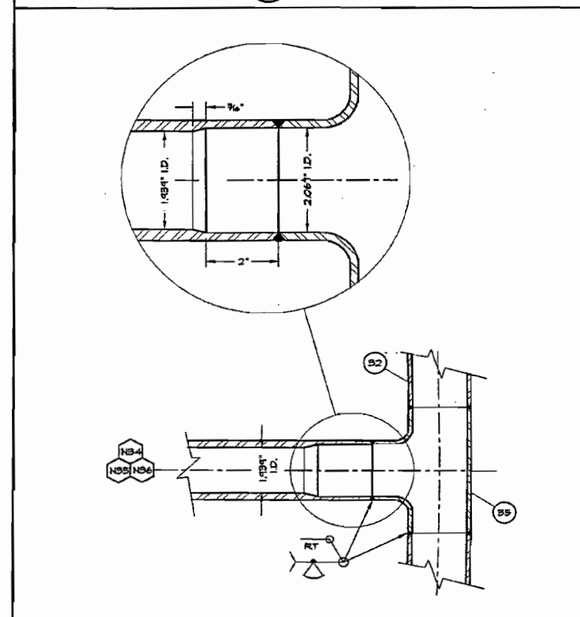

WASH RING TEE SECTION A-A
SCALE: 3/8" = 1"

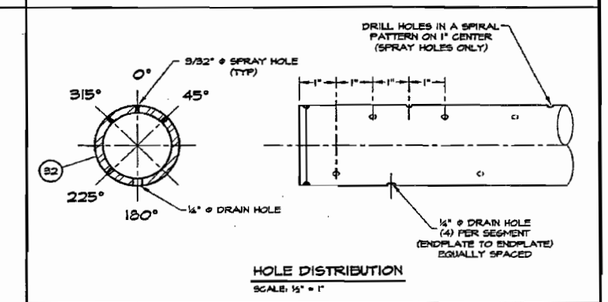

HOLE DISTRIBUTION
SCALE: 1/2" = 1"

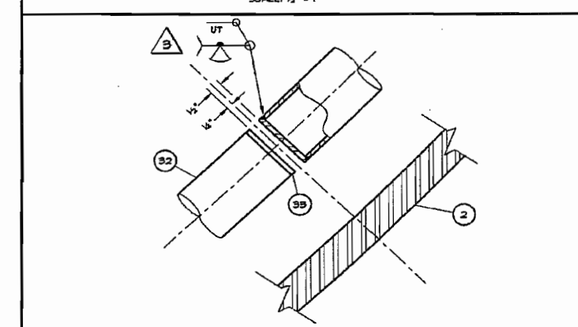

END PLATE DETAIL
SCALE: 3/8" = 1"

R10443758

24590-PTF-MV-UFP-VSL-00062C
Job No. 24590
Bechtel National, Inc.
SUPPLIER DOCUMENT STATUS
1. [X] Work may proceed.
2. [ ] Revise and resubmit. Work may proceed subject to resolution of indicated comments.
3. [ ] Revise and resubmit. Work may not proceed.
4. [ ] Review not required. Work may proceed.
Permission to proceed does not constitute acceptance or approval of design details, calculations, analyses, test methods, or materials developed or selected by the supplier and does not relieve supplier from full compliance with contractual obligations.
REVIEWED: PT / MC
Q-321 Document Category: 1.3
[From Supplement A to Q-321-E (E) or Q-321-V (V), as applicable, or "N/A" if SSRS is used]
Supersedes BNI Document No. ____ Rev. ____
[When applicable]
Accepted by: H-KHURANA (Print Name) (Signature) 01/13/05 (Date)
Released by ____ (Print Name) (Signature) (Date)
[When applicable]

REVISIONS

NO	DESCRIPTION	REV BY	APD BY	DATE
5	NO CHANGES	SMT	MJV	12/06/04
4	NO CHANGES	SMT	MJV	11/05/04
3	REVISED PER CUSTOMER COMMENTS & ENGINEERING CHANGES	SMT	MJV	06/08/04
2	REVISED PER CUSTOMER COMMENTS & ENGINEERING CHANGES	MDH	MJV	09/03/03
1A	REVISED PER CUSTOMER COMMENTS & ENGINEERING CHANGES	MDH	MJV	07/18/03
1	DRAWING ADDED	MJV	MDH	04/28/03

NORTHWEST COPPER WORKS, INC.
1303 N. RIVER STREET • PORTLAND, OREGON • 97227

180" I.D. ULTRAFILTER PERMEATE COLLECTION VESSEL WASH RING DETAILS

BECHTEL NATIONAL INC.
3000 George Washington Way
Richland, Washington 99352

SCALE AS NOTED	JOB NO. 3007	EQUIP. NO. UFP-VSL-00062C	
DATE 04/28/03	CHKD. BY MJV	P.O. NO. 24590-QL-POD-MVAO-00001 REV 0	
DWN. BY MDH	APPD. BY MDH	DWG. NO. D-3007	REV 5
		SHT. NO. 5 OF 8	

~~REF. DWG 24590-PTF-MV-UFP-00005 REV 0~~
BECHTEL DOC. 24590-QL-POD-MVAO-00001-03-11 REV. 00 E
DELETED BY RPP-WTP

P:\Swap\ACAD\03\D3007-5 Mon Dec 06 10:03:08 2004