Drawing Change Notice

CHANGE DOCUMENT NO.
24590-PTF-VDCN-MS-11-00007

JOB NO.	TITLE FOR CHANGE NOTICE
24590	PTF-FRP-VSL-00002D REDESIGN

DESIGN DOCUMENT NUMBER	REV	DESIGN DOCUMENT NUMBER	REV
24590-QL-SRA-MTF5-00001-29-01	K	24590-QL-SRA-MTF5-00001-29-06	B
24590-QL-SRA-MTF5-00001-29-07	B	24590-QL-SRA-MTF5-00001-29-17	B
24590-QL-SRA-MTF5-00001-29-21	I	24590-QL-SRA-MTF5-00001-29-22	H
24590-QL-SRA-MTF5-00001-29-23	H	24590-QL-SRA-MTF5-00001-29-24	D
24590-QL-SRA-MTF5-00001-29-29	C	24590-QL-SRA-MTF5-00001-29-30	D
24590-QL-SRA-MTF5-00001-29-32	B	24590-QL-SRA-MTF5-00001-29-00073	C

PART OF DESIGN CHANGE PACKAGE (DCP)? ☐ Yes ☒ No DCP No.: Rev:

JUSTIFICATION FOR CHANGE	CAUSE CODE
Based on the re-analysis of FRP-VSL-00002A/B/C/D, per calculation 24590-PTF-MVC-FRP-00003, for revised seismic conditions and design evolution, a redesign of the vessel is required.	01-23

Supersedes Change Document ☐ Yes ☒ No

ECN Needed ☐ Yes ☒ No

REQUIREMENTS REVIEW

Client Approval Required ☐ Yes ☒ No | Interface Resolution Required * ☐ Yes ☒ No

Address any "yes" answers in the description

DESCRIPTION OF CHANGE

Note: Components removed or deleted per this VDCN are to be removed from the actual vessel unless Otherwise noted.

1. **Affected Document: 24590-QL-SRA-MTF5-00001-29-01 (see Attachment 1, page 1 of this VDCN).**

   a) Bill of Materials block: Revise the following line Items:

   Line Item N3 Elevation block: 35'-3" from 35'-4 5/16".

   Line Item N3 Description / Service block: INSTRUMENTATION from SPARE CAPPED.

   b) Bill of Materials block: Add the following line Items:

   Line Item N03A

   Line Item N03B

   Line Item N03C

   Please note that source, special nuclear, and byproduct materials, as defined in the Atomic Energy Act of 1954 (AEA) are regulated at the U. S. Department of Energy (DOE) facilities exclusively by DOE acting pursuant to its AEA authority. DOE asserts that pursuant to AEA, it has sole and exclusive responsibility and authority to regulate source, special nuclear, and byproduct materials at DOE-owned nuclear facilities. Information contained herein on radionuclides is provided for process description purposes only.

   c) Elevations:

   Delete Nozzle N3 bubble from N2 bubble column.

   Add Nozzle bubble number N03, N03A, N03B and N03C to N70 bubbler column.

   Add Knuckle Stiffener plates shown on Attachment 1, page 12 of this VDCN.

   Revise Outer PJM nozzle cone to eccentric from concentric shown on 24590-PTF-VDCN-MS-00003, Attachment 1, page 12, Elevation Assemblies A & B.

   d) Note: Add the following notes :

   2. WELD SHOWN MAY BE FIELD-APPLIED AS NECESSARY TO SUPPORT INSTALLATION OF COMPONENTS

   3. FABRICATION TOLERANCES FOR FIELD MODIFICATIONS SHALL BE PER 24590-WTP-MV-M59T-00001 (PRESSURE VESSEL TOLERANCES STANDARD DETAILS) AND PFI STANDARD ES-24 (PIPE BENDING METHODS, TOLERANCES, PROCESS AND

JOB NO.	TITLE FOR CHANGE NOTICE
24590	PTF-FRP-VSL-00002D REDESIGN

DESCRIPTION OF CHANGE

MATERIAL REQUIREMENT). FOR TOLERANCES NOT SPECIFIED BY THESE STANDARDS, THE FOLLOWING SHALL APPLY, UNLESS OTHERWISE NOTED:

DIMENSION	TOLERANCE
LINEAR <12 IN	± 1/8 INCHES
LINEAR >=12 IN	± 1/4 INCHES
ANGULAR	± 2 DEGREES

e) Add a HOLD LIST as follows:

HOLD LIST
1. KNUCKLE STIFFENER PLATES ARE ON HOLD PENDING CONFIRMATION OF VESSEL MAXIMUM OPERATING PRESSURE.
2. WASH RING PIPE SCHEDULE CHANGE IS ON HOLD PENDING CONFIRMATION OF VESSEL MAXIMUM OPERATING PRESSURE.
3. INSTALLATION OF REVISED PJM NOZZLES ON OUTER PJMS IS ON HOLD PENDING RESOLUTION OF MIXING REQUIREMENTS.

2. Affected Document: 24590-QL-SRA-MTF5-00001-29-06 (see Attachment 1, page 2 of this VDCN).

a) Bill of Materials block: Add Item 5-4 shown on Attachment 1, page 12 of this VDCN.

b) Plan View: Add Knuckle Stiffener plates shown on Attachment 1, page 12 of this VDCN.

c) View C-C: Add Knuckle Stiffener plates shown on Attachment 1, page 12 of this VDCN.

3. Affected Document: 24590-QL-SRA-MTF5-00001-29-07 (see Attachment 1, page 3 of this VDCN).

a) Bottom Head Details Drawing:

Add Knuckle Stiffener Plate, Item 4 shown on Attachment 1, page 12 of this VDCN.

Add Details D, E, and F shown on Attachment 1, page 12 of this VDCN.

4. Affected Document: 24590-QL-SRA-MTF5-00001-29-17 (see Attachment 1, page 4 of this VDCN).

a) Bill of Materials block: Delete the following line Item:

Line Item 12-2

b) Bill of Materials block: Add the following line Items shown on Attachment 1, page 13 of this VDCN.

Line Item 12-3

Line Item 12-4

Line Item 12-5

Line Item 12-6

Line Item 12-7

Line Item 12-8

Line Item 12-9

Line Item 12-10

Line Item 12-11

Line Item 12-12

Line Item 12-13

JOB NO.	TITLE FOR CHANGE NOTICE
24590	PTF-FRP-VSL-00002D REDESIGN

DESCRIPTION OF CHANGE

Line Item 12-14

Line Item 12-15

Line Item 12-16

Line Item 12-17

Line Item 12-18

c) Joint A: Replace Item 2 (Cap) with Item 6 (Plate), including updating depiction to new instrument nozzle as shown on Attachment 1, page 13 of this VDCN.

d) Cross Section of Nozzle view: Delete the following shown on Attachment 1, page 13 of this VDCN.

Item 12-2

Dimensions

e) Cross Section of Nozzle view: Add Item, Dimension, and Dip Pipe supports shown on Attachment 1, page 13 of this VDCN.

Items 12-3 through 12-18

Dimensions

Dip Pipe Supports (phantom lines)

f) Title Block: Revise the Title as shown on Attachment 1, page 4 of this VDCN.

g) Nozzle N3 Assembly Drawing: Add View, Details, and Sections and Item shown on Attachment1, page 13 of this VDCN.

View A-A

Detail 1

Sections B-B, C-C, and D-D

Item 16 Pipe Guide Strap

5. Affected Document: 24590-QL-SRA-MTF5-00001-29-21 (see Attachment 1, page 5 of this VDCN).

a) Bill of Materials block: Delete the following line Items:

Line Item 18-8

Line Item 18-9

Line Item 18-22

Line Item 18-23

b) Bill of Materials block: Add the following line Items shown on Attachment 1, page 14 of this VDCN.

Line Item 18-24

Line Item 18-25

Line Item 18-26

Line Item 18-27

Line Item 18-28

Line Item 18-29

JOB NO.	TITLE FOR CHANGE NOTICE
24590	PTF-FRP-VSL-00002D REDESIGN

DESCRIPTION OF CHANGE

Line Item 18-30

c) Bill of Materials block: Revise the following line Items:

Line Item 18-5 ASSM PC block: 12 from 17

d) Cross Section of Nozzle view: Delete the following Items and Detail view:

Items 18-8, 18-9, 18-22, 18-23 and 18-5 (from bell)

Joint G (View)

Dimensions on Support

Weld Symbol on Support

e) Notes: Delete the following note:

Note 3

f) Cross Section of Nozzle view: Add the following Section callout:

Section X

g) Cross Section of Nozzle view: Revise the following dimensions:

42'-1 3/4" from 41'-11 1/4"

38'-1 3/4" from 38'-11 1/4"

40'-10 3/4" from 41'-8 1/4"

35'-10 3/4" from 36'-8 1/4"

37'-7 3/4" from 38'-5 1/4"

42'-7 3/4" from 43'-5 1/4"

1'-0" from 2 1/2"

h) Cross Section of Nozzle view: Add the following Section, view, dimensions, and support shown on Attachment 1, page 14 of this VDCN.

Dimension on Bracing bars

Section N-N

Dip Pipe Support (Phantom lines)

i) Nozzle N70 Assembly Drawing: Add Detail, and Section and Item shown on Attachment1, page 14 of this VDCN.

Detail 1

Section N-N

Item 27 Pipe Guide Plate

6. Affected Document: 24590-QL-SRA-MTF5-00001-29-22 (see Attachment 1, page 6 of this VDCN).

a) Section E: Delete the following Items:

Items 8, 9, 22 and 23

Section P with arrows

JOB NO.	TITLE FOR CHANGE NOTICE
24590	PTF-FRP-VSL-00002D REDESIGN

DESCRIPTION OF CHANGE

b) N70 Pipe Assembly Drawing: Delete the following Sections, Items, and Details:

Section P

Section S-S

Joint G

Items 9 and 23

c) Section J: Replace Item 5 (Plate 1/2") with Item 29 (Block Plate) as shown on Attachment 1, page 14, Section P-P of this VDCN.

d) Section M: Replace Item 5 (Plate 1/2") with Item 30 (Block Plate) as shown on Attachment 1, page 14, Section R-R of this VDCN.

7. Affected Document: 24590-QL-SRA-MTF5-00001-29-23 (see Attachment 1, page 7 of this VDCN).

a) Bill of Materials block: Delete the following line Items:

Line Item 19-5

Line Item 19-6

Line Item 19-7

Line Item 19-8

Line Item 19-9

Line Item 19-10

Line Item 19-11

Line Item 19-12

Line Item 19-13

Line Item 19-14

Line Item 19-15

Line Item 19-16

Line Item 19-17

b) Bill of Materials block: Add the following line Items shown on Attachment 1, page 14 of this VDCN.

Line Item 19-18

Line Item 19-19

Line Item 19-20

Line Item 19-21

c) Elevation view: Add the following Items shown on Attachment 1, page 14 of this VDCN.

Items 18, 19, 20 and 21

d) Elevation view: Delete the following Items:

Items 5, 6, 7, 8, 11, 14 and 15

JOB NO.	TITLE FOR CHANGE NOTICE
24590	PTF-FRP-VSL-00002D REDESIGN

DESCRIPTION OF CHANGE

e) N18 3/4" DIA Temperature Drawing: Delete the following Detail and Sections:

Detail F

Sections C and D

f) N18 3/4" DIA Temperature Drawing: Add the following Item:

Item 21 Pipe Guide Strap

8. Affected Document: 24590-QL-SRA-MTF5-00001-29-24 (see Attachment 1, page 8 of this VDCN).

a) Drawing: Delete the following:

Items 5, 6, 12, 13, 14, 15, 16 and 17

Section X-X

9. Affected Document: 24590-QL-SRA-MTF5-00001-29-29 (see Attachment 1, page 9 of this VDCN).

a) Bill of Materials block: Add the following line Items shown on Attachment 1, page 15 of this VDCN.

Line Item 30-9

Line Item 30-10

Line Item 30-11

Line Item 30-12

Line Item 30-13

b) Section A: Add the following Items shown on Attachment 1, page 15 of this VDCN.

Items 9 thru 13

c) Section A and Nozzle N64 Plan View of Nozzle: Update depiction on PJM support to show new PJM lateral supports and PJM eccentric nozzle as shown on Attachment 1, page 7 of 24590-PTF-VDCN-MS-11-00003 document.

10. Affected Document: 24590-QL-SRA-MTF5-00001-29-30 (see Attachment 1, page 10 of this VDCN).

a) Section E: Add the following Items shown on Attachment 1, page 15 of this VDCN.

Items 9, 11 and 13

b) Detail F: Add the following Items shown on Attachment 1, page 15 of this VDCN.

Items 10 and 12

c) N63 4" Dia Details Drawing: Add the following Sections, View and Items shown on Attachment 1, page 15 of this VDCN.

Sections A-A, L-L and J-J

View K-K

Item 11 Bracket Plate

d) Section E: Delete the following:

Weld leader on items 1 and 4

Drawing Change Notice

CHANGE DOCUMENT NO.
24590-PTF-VDCN-MS-11-00007

JOB NO.	TITLE FOR CHANGE NOTICE
24590	PTF-FRP-VSL-00002D REDESIGN

DESCRIPTION OF CHANGE

e) Item 4: Revise the following Diameter:

R 2 5/16 to R 2 7/8"

11. Affected Document: 24590-QL-SRA-MTF5-00001-29-73 (see Attachment 1, page 11 of this VDCN).

a) Bill of Materials block: Delete the following line Items:

Line Item 18-5

Line Item 18-14

Line Item 18-15

Line Item 18-16

Line Item 18-17

Line Item 18-19

Line Item 18-20

Line Item 18-21

b) Drawing: Delete the following All Support Details and Items 18-5, 18-14 thru 18-21.

12. Affected Document: 24590-QL-SRA-MTF5-00001-29-32 (see Attachment 1, page 16 of this VDCN).

a) Bill of Materials block: Revise the following line Items:

Line Item 35-1 Description block: Sch 40S to Sch 160S.

Line Item 35-2 Description block: Sch 40S to Sch 160S.

Line Item 35-3 Description block: Sch 40S to Sch 160S

ORIGINATOR	CHECKER
D. HARRIS	W. WILCOX

Reviews

CON - B. FOSTER	E&NS - J. HINCKLEY	CS&A - S. GERMAIN D. Harris sign for S. Germain per telecon	MET - J. DISNEY
MS&PE - B. LINDBERG	PD - L. LEYLAND	6/8/11 3:45	

Approval(s)

PT EQUIP EGS - J. JULYK			

Date *(inserted by final approver)*: 6/8/11

REVISE BY RPP-WTP

ADD NOZZLES BY RPP-WTP

DELETE NOZZLE BY RPP-WTP

35'-3"

N03A 1 SEE PG 13 OF 15 36'-2" 1" DIA BALANCE
N03B 1 SEE PG 13 OF 15 36'-3" 1" DIA DENSITY
N03C 1 SEE PG 13 OF 15 36'-4" 1" DIA LEVEL

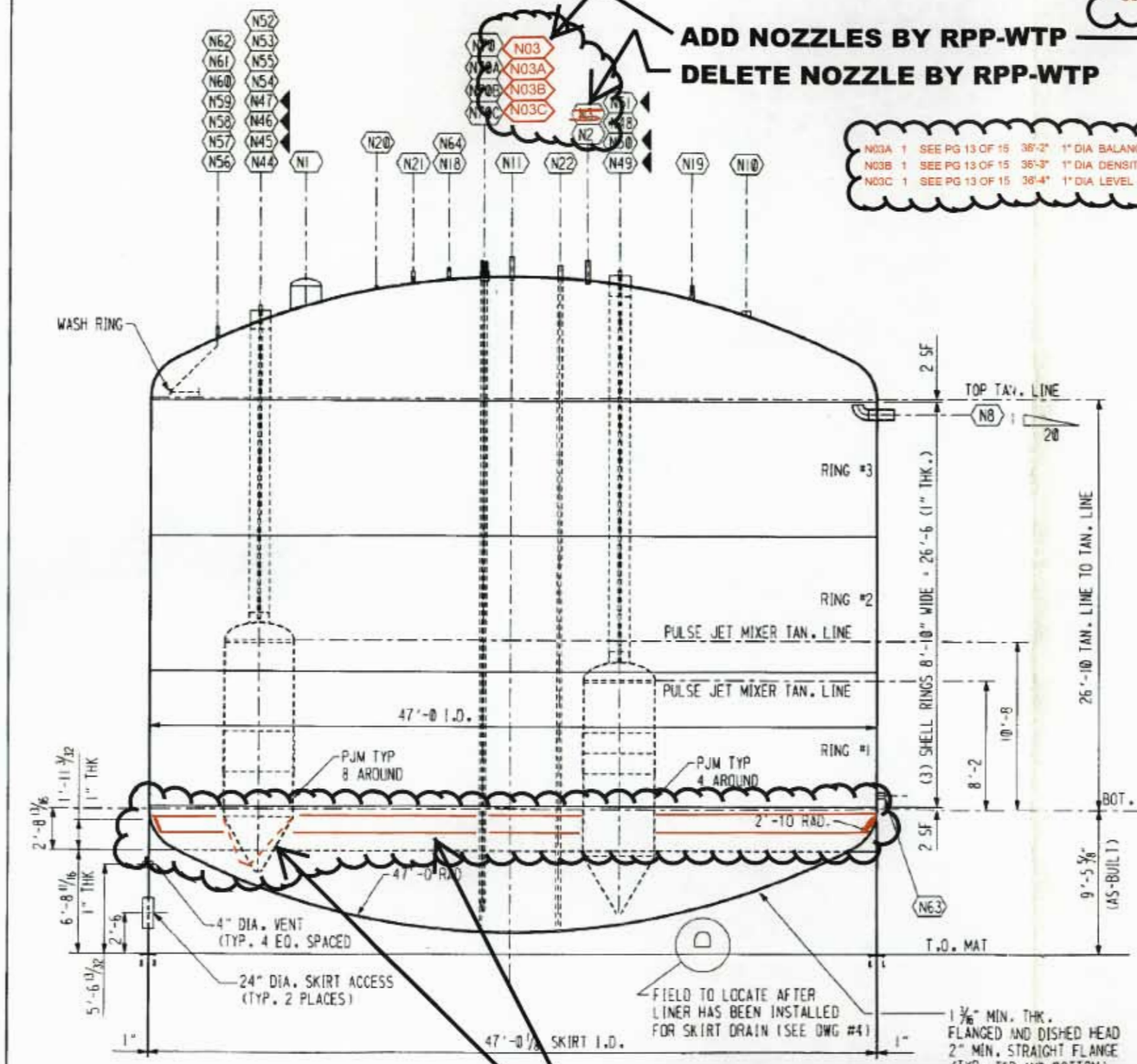

ELEVATION

ADD KNUCKLE STIFFENERS BY RPP-WTP ON HOLD

REVISE PJM NOZZLE BY RPP-WTP ON HOLD

ADD NOTE BY RPP-WTP

NOTES:
1. ALL ELEVATIONS ARE TO FACE OF FLANGE OR END OF PIPE AND FROM BOTTOM TANGENT LINE. EXCEPT NOZZLES N8 & N63 WHICH ARE TO HORIZONTAL CENTER LINE OF NOZZLE FROM BOTTOM T.L.
2. WELD SHOWN MAY BE FIELD - APPLIED AS NECESSARY TO SUPPORT INSTALLATION OF COMPONENTS.
3. FABRICATION TOLERANCES FOR FIELD MODIFICATIONS SHALL BE PER 24590-WTP-MV-MS-00001 REV 00 K PRESSURE VESSEL TOLERANCES STANDARD DETAILS) AND PFI STANDARD ES-24 (PIPE BENDING METHODS, TOLERANCES, PROCESS AND MATERIAL REQUIREMENT). FOR TOLERANCES NOT SPECIFIED

24590-QL-SRA-MTF5-00001-29-01

FITTINGS FURNISHED & INSTALLED BY CBI

MARK	NO. REQ'D	CBI MARK	AS-BUILT NOZZLE ELEVATIONS (SEE NOTE 1)	DESCRIPTION / SERVICE
N1	1	SEE DWG 18	34'-1 5/8"	24" DIA. MANWAY (CAPPED)
N2	1	SEE DWG 11	35'-4 1/4"	3" DIA. INLET
N3	1	SEE DWG 12	35'-4 5/16"	6" DIA. SPARE (CAPPED) INSTRUMENTATION
N8	1	SEE DWG 13	35'-8 1/2"	8" DIA. OVERFLOW
N10	1	SEE DWG 15	32'-8 5/16"	6" DIA. PASSIVE AIR INLET
N11	1	SEE DWG 16	35'-4 13/16"	8" DIA. VESSEL VENT
N18	1	SEE DWG 19	35'-4 9/16"	3/4" DIA. TEMPERATURE
N19	1	SEE DWG 20	34'-0 9/16"	1" DIA. SPARE (CAPPED)
N20	1	SEE DWG 21	34'-4 3/16"	2" DIA. CONCENTRATE RECYCLE INLET
N21	1	SEE DWG 22	35'-4 3/4"	1" DIA. SPARE WITH DIP PIPE (CAPPED)
N22	1	SEE DWG 23	35'-8 1/16"	3" DIA. SPARE WITH DIP PIPE (CAPPED)
N44	1	*	32'-11 1/2"	2"/14" DIA. AIR/VACUUM TO FRP-PJM-00016
N45	1	*	32'-11 11/16"	2"/14" DIA. AIR/VACUUM TO FRP-PJM-00005
N46	1	*	33'-0 1/16"	2"/14" DIA. AIR/VACUUM TO FRP-PJM-00006
N47	1	*	33'-0 1/4"	2"/14" DIA. AIR/VACUUM TO FRP-PJM-00007
N48	1	*	35'-5 3/16"	2"/14" DIA. AIR/VACUUM TO FRP-PJM-00008
N49	1	*	35'-4 1/16"	2"/14" DIA. AIR/VACUUM TO FRP-PJM-00009
N50	1	*	35'-5 1/16"	2"/14" DIA. AIR/VACUUM TO FRP-PJM-00010
N51	1	*	35'-4 9/16"	2"/14" DIA. AIR/VACUUM TO FRP-PJM-00011
N52	1	*	32'-11 13/16"	2"/14" DIA. AIR/VACUUM TO FRP-PJM-00012
N53	1	*	32'-11 3/16"	2"/14" DIA. AIR/VACUUM TO FRP-PJM-00013
N54	1	*	33'-0 3/16"	2"/14" DIA. AIR/VACUUM TO FRP-PJM-00014
N55	1	*	33'-0 9/16"	2"/14" DIA. AIR/VACUUM TO FRP-PJM-00015
N56	1	SEE DWG 35	30'-5 13/16"	2" DIA. INLET TO WASH RING
N57	1	SEE DWG 35	30'-6 11/16"	2" DIA. INLET TO WASH RING
N58	1	SEE DWG 35	30'-6 11/16"	2" DIA. INLET TO WASH RING
N59	1	SEE DWG 35	30'-6 1/4"	2" DIA. INLET TO WASH RING
N60	1	SEE DWG 35	30'-6 3/16"	2" DIA. INLET TO WASH RING
N61	1	SEE DWG 35	30'-6 1/8"	2" DIA. INLET TO WASH RING
N62	1	SEE DWG 35	30'-6 1/8"	2" DIA. INLET TO WASH RING
N63	1	SEE DWG 30	SEE DWG 30	4" DIA. OUTLET
N64	1	SEE DWG 31	35'-5 7/16"	1 1/2" DIA. FORCED PURGE AIR INLET
N70	1	SEE DWG 18	-	6" DIA. INSTRUMENTATION
N70A	1	SEE DWG 18	35'-6 13/16"	1" DIA. BALANCE
N70B	1	SEE DWG 18	35'-7 11/16"	1" DIA. DENSITY
N70C	1	SEE DWG 18	35'-8 13/16"	1" DIA. LEVEL

SEE DCSE SEM NOZZLE CONTROL DRAWING 372005 FOR NOZZLE DETAILS AND OTHER ATTACHMENTS TO SHELL

HOLD
1. KNUCKLE STIFFENER PLATES ARE ON HOLD PENDING CONFIRMATION OF VESSEL MAXIMUM OPERATING PRESSURE.
2. WASH RING PIPE SCHEDULE CHANGE IS ON HOLD PENDING CONFIRMATION OF VESSEL MAXIMUM OPERATING PRESSURE.
3. INSTALLATION OF REVISED PJM NOZZLES ON OUTER PJMS IS ON HOLD PENDING RESOLUTION OF PIPING REQUIREMENTS.

SUPPLIER'S / PURCHASER'S NO

CBI

GENERAL ELEVATION
VESSEL FRP-VSL-00002D (0)
WASTE FEED RECEIPT
RICHLAND, WA

CUSTOMER'S NO
BY DU CHKD CST DATE 8-28-02
PVE / ER BALCOMB
ENGINEERING ASSIGNED

CONTRACT NO 372020
DWG 1 REV 13
SHT 1

INDICATES CHANGE FROM PREVIOUS ISSUE

CAD FILE: 20020100.DGN

CBI RECEIVED
... n 5 2005

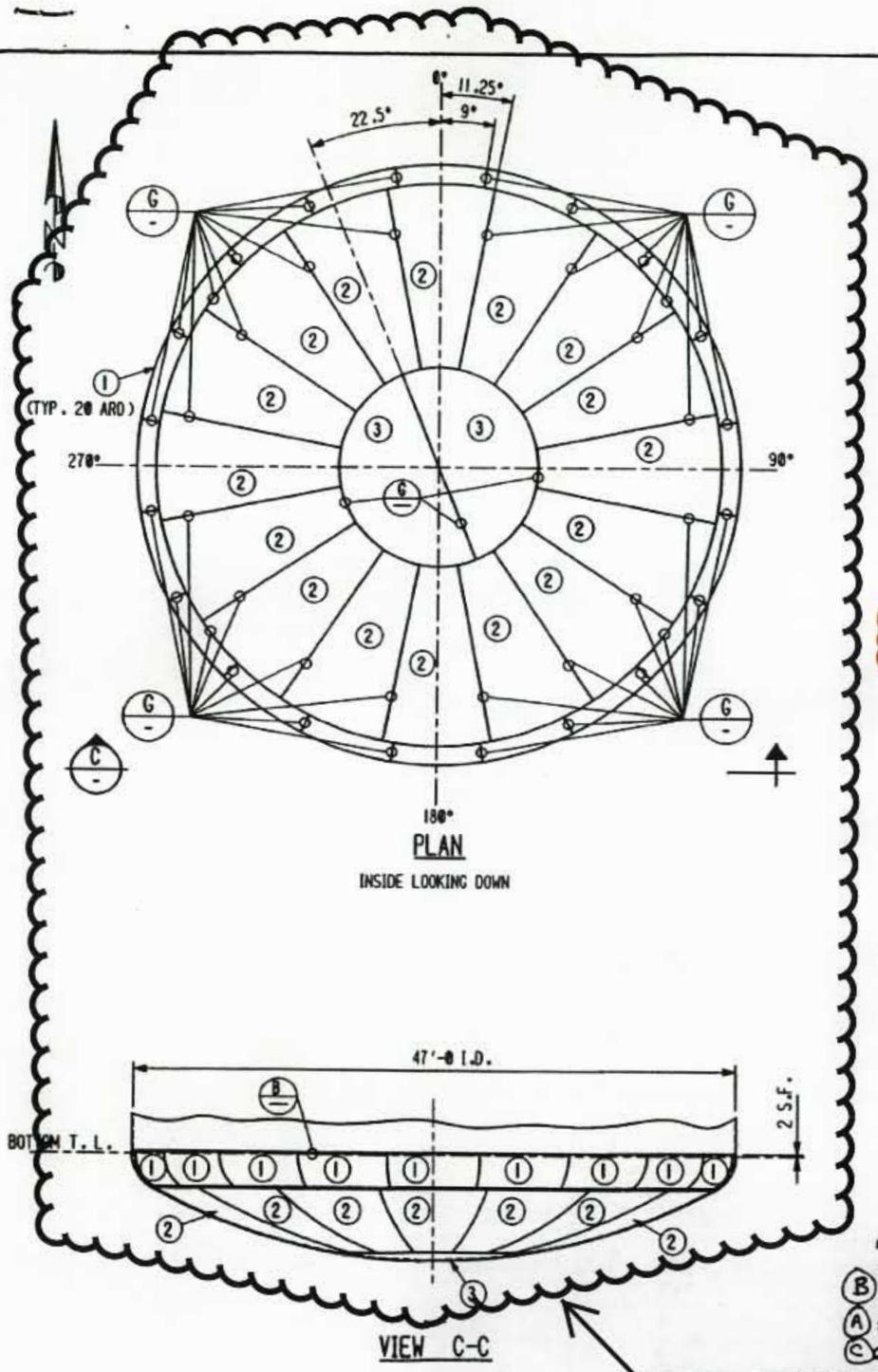

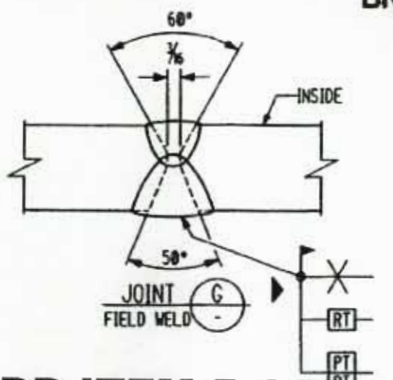

ADD ITEM 5-4 BY RPP-WTP

ON HOLD

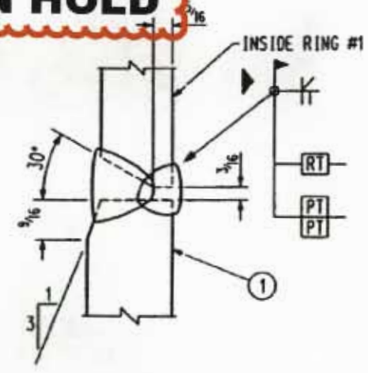

SHIP PC	MARK	ASSM PC	DESCRIPTION	LENGTH FT	LENGTH IN	SPEC	ID	EST WT
20	5-1		PL SK x 1 3/16			M1	A	22718
			(45° x 1.2' x 1'-7)					
16	5-2		PL SK x 1 3/16			M1	A	72535
			(104 9/16 x 1.2 x 15'-3 5/16					
2	5-3		PL SK x 1 3/16			M1	A	9963
			(96 x 1.2 x 20'-0)					
			M1 = SA240 316L, CBI SPEC#A-240-240					

CBI RECEIVED
JUN 2 3 2003
BNI-CBI- 314

Bechtel Systems & Infrastructure, Inc.
JOB No 24590

SUPPLIER DOCUMENT STATUS

1. ☒ WORK MAY PROCEED
2. ☐ REVISE AND RESUBMIT. WORK MAY PROCEED SUBJECT TO RESOLUTION OF INDICATED COMMENTS
3. ☐ REVISE AND RESUBMIT. WORK MAY NOT PROCEED
4. ☐ REVIEW NOT REQUIRED. WORK MAY PROCEED.

PERMISSION TO PROCEED DOES NOT CONSTITUTE ACCEPTANCE OR APPROVAL OF DESIGN DETAILS, CALCULATIONS, ANALYSES, TEST METHODS, OR MATERIALS DEVELOPED OR SELECTED BY THE SUPPLIER AND DOES NOT RELIEVE SUPPLIER FROM FULL COMPLIANCE WITH CONTRACTUAL OBLIGATIONS.

	M	P	ML	H	MH	E	C&I	CS&A	PD	PT	ESH
REVIEWED											

G-321 DOCUMENT CATEGORY 1.1
[From Supplement A to G-321-E (E) or G-321-V (V), as applicable]
RESPONSIBLE ENGINEER R Simmons DATE 26 May 03

KV 06/08/05

NOTES:

1. WORK THIS DWG. WITH DWG. #1, 2 & 5 SHT. 2 THRU 4
2. ALL WELDS TO BE 316L UNLESS NOTED OTHERWISE.

6/17/03 6:18:03
(B) Processed/Data Entry ☒ Copied/CA ☐ Scanned ☐ Filed
(A) 6-17-03
(C) 6/17/03

R10242436

KV 06/08/05

~~24590-QL-SRA-MTF5-00001 24-06 Rev 0A~~

4/23/03 4-23-03
(B) Processed/Data Entry ☒ Copied/CA ☒ Scanned ☐ Filed
(A) 4/22/03
(C) 4-23-03

ADD KNUCKLE STIFFNER PLATES BY RPP-WTP ON HOLD

CERTIFIED AS BUILT CONTRACT DRAWING
DATE: 4/5/05
SIGNED: DA Balcom

REVISIONS					
	REVISED PER CUSTOMER COMMENTS AND ADDED WELD DETAILS.	1/29/03	DJV		
	REVISED JOINT 6 JOINT 6.	2/20/03	DJV		
	ADDED MT AND PT	3/27/03	DJV		

CBI

BOTTOM HEAD ASSEMBLY
VESSEL FRP-VSL-00002D (Q)
WASTE FEED RECEIPT
RICHLAND, WA

CUSTOMER'S NO
BY DJV CHKD CST DATE 8-29-02
PVE / B.R. BALCOM
CONTRACTOR ASSIGNED

CONTRACT NO 1372020
DWG 5 REV 3
SHT 1

CAD FILE: 20205410.dgn

24590-QL-SRA-MTF5-00001-24-06 REV 00B

CBI RECEIVED
APR 0 5 2005

SECTIONAL ELEVATION

4/23/03 4-24-03
(B) Processed/ Data Entry | Copied/ QA | Scanned | Filed
(A) 4/22/03
(C) 4-23-03

ADD KNUCKLE STIFFENER DETAILS BY RPP-WTP ON HOLD

DISH NEAR SIDE
DEVELOPED INSIDE VIEW

5-28-03 6-2-03
(B) Processed/ Data Entry | Copied/ QA | Scanned | Filed
(A) KJ 5/27/03
(C) 5/27/03

EDGE PREP (A)

SHOP NOTE: PUNCH MARK EACH CORNER OF ALL PLATES INSIDE & OUTSIDE

R10242435

~~24590-QL-SRA-MTF5-00001-29-07 Rev 00A~~ KV 06/08/05

24590-QL-SRA-MTF5-00001-29-07
REV 00B

KJ 06/08/05

Bechtel Systems & Infrastructure, Inc.

JOB No. 24590

SUPPLIER DOCUMENT STATUS
1 ☒ WORK MAY PROCEED
2 ☐ REVISE AND RESUBMIT. WORK MAY PROCEED SUBJECT TO RESOLUTION OF INDICATED COMMENTS
3 ☐ REVISE AND RESUBMIT. WORK MAY NOT PROCEED
4 ☐ REVIEW NOT REQUIRED. WORK MAY PROCEED.

PERMISSION TO PROCEED DOES NOT CONSTITUTE ACCEPTANCE OR APPROVAL OF DESIGN DETAILS, CALCULATIONS, ANALYSES, TEST METHODS, OR MATERIALS DEVELOPED OR SELECTED BY THE SUPPLIER AND DOES NOT ...VE SUPPLIER FROM FULL COMPLIANCE WITH CONTRACTUAL ...ATIONS.

	M	P	ML	H	MH	E	C&I	CS&A	PD	PT	ESH
REVIEWED	[signature]										

G-321 DOCUMENT CATEGORY 1.1
[From Supplement A to G-321-E (E) or G-321-V (V), as applicable]
RESPONSIBLE ENGINEER R. Simmons DATE [illegible]

▶ INDICATES CHANGE FROM PREVIOUS ISSUE

CERTIFIED AS BUILT CONTRACT DRAWING
DATE: 4/5/05
SIGNED: B A Balcomb

CBI

BOTTOM HEAD DETAILS
VESSEL FRP-VSL-00002D (Q)
WASTE FEED RECEIPT
RICHLAND, WA

CUSTOMER'S NO
BY DU CHKD CST DATE 8-29-02
PYE / B.R. BALCOMB
ENGINEERING ASSURED
CONTRACT NO 137202D
DWG 5 REV 1
SHT 2

CAD FILE: 20205020.dgn

CBI RECEIVED
APR 05 2003

DELETE ITEM 12-2

DELETE ITEM 12-2
REPLACE WITH ITEM
12-6 BY RPP-WTP

DELETE ITEM 12-2
BY RPP-WTP

CBI RECEIVED
JUN 23 2003
BNI-CBI 314

SKEP PC	MARK	ASSM PC	DESCRIPTION	LENGTH FT	LENGTH IN	SPEC	ID	EST WT
1	12-A		6" DIA NOZZLE ASSEMBLY				A	46
1	12-1	1	PIPE 6" DIA SCH 80S SMLS SKBE	1	1 3/16	M3	A	22
1	12-2	1	PIPE CAP 6" SCH 80S BW			M7	A	3

M3=SA312 TP316L,CBI SPEC A-312-2406

M7=SA403 316LWPS,CBI SPEC A-403-2421

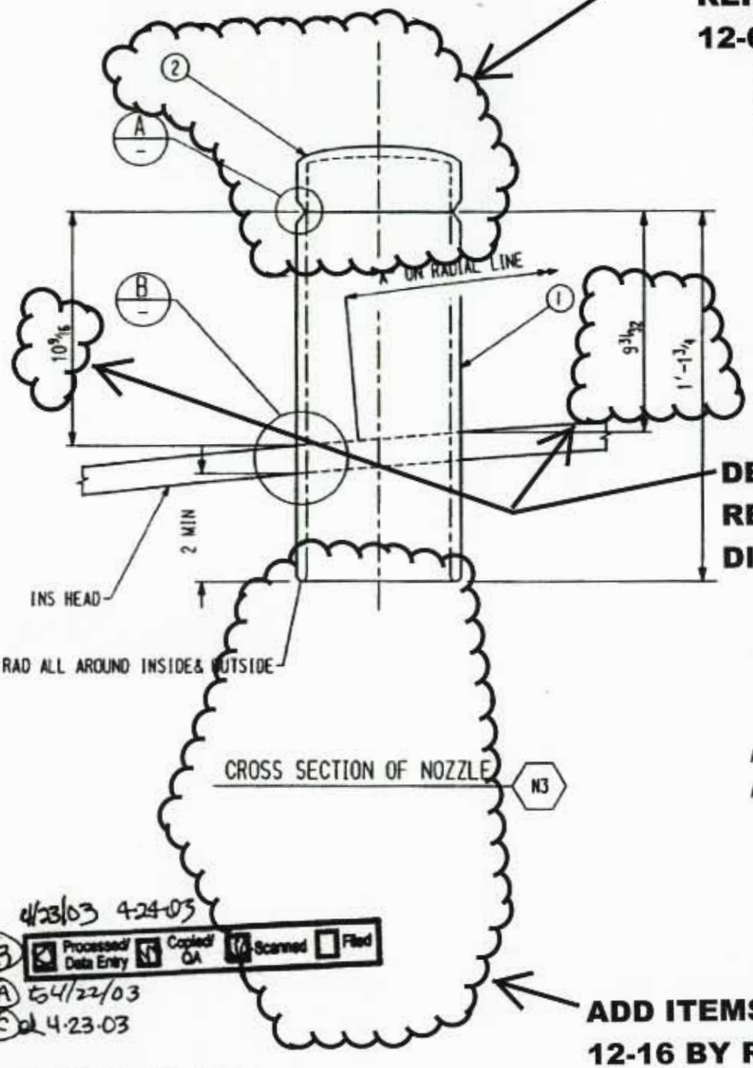

DELETE DIMENSION
REPLACE WITH NEW
DIMENSION BY RPP-WTP

JOINT SHOP WELD A

ADD ITEMS 12-3 THRU
12-18 BY RPP-WTP

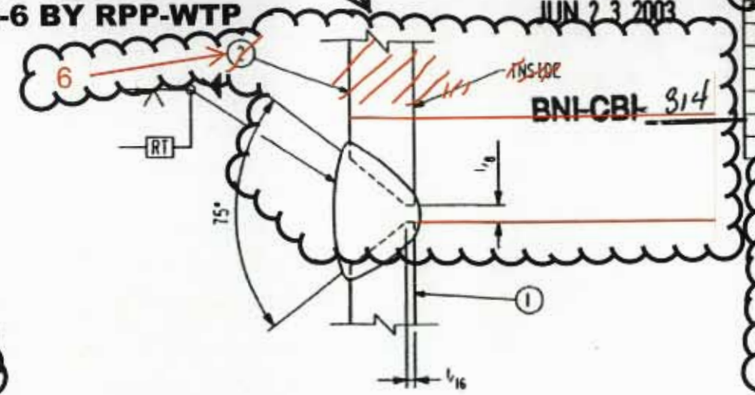

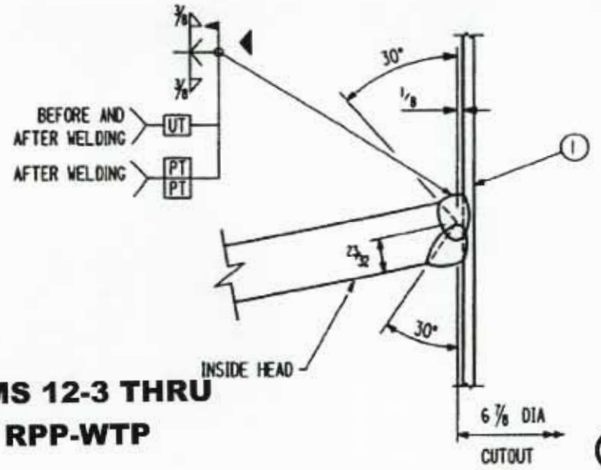

ADD ITEMS 12-3 THRU
12-16 BY RPP-WTP

ARC MEASURED ON OUTSIDE OF SHELL ALONG GIRTH JOINT CL AT PC MK #1-2/7-3 FROM AZ 0°	'A' MEASURED ON OUTSIDE OF SHELL FROM GIRTH JOINT CL OF PC MK #1-2/7-3
0	3'-10 15/32

ADD DETAIL 1, VIEWA-A,
SECTIONS B-B, C-C, D-D
AND ITEM 16 BY RPP-WTP

JOINT FIELD WELD B

REVISE BY RPP-WTP

▶ INDICATES CHANGE FROM PREVIOUS ISSUE

Bechtel Systems & Infrastructure, Inc.

JOB No. 24590

SUPPLIER DOCUMENT STATUS

1. ☑ WORK MAY PROCEED
2. ☐ REVISE AND RESUBMIT. WORK MAY PROCEED SUBJECT TO RESOLUTION OF INDICATED COMMENTS
3. ☐ REVISE AND RESUBMIT. WORK MAY NOT PROCEED
4. ☐ REVIEW NOT REQUIRED. WORK MAY PROCEED

PERMISSION TO PROCEED DOES NOT CONSTITUTE ACCEPTANCE OR APPROVAL OF DESIGN DETAILS, CALCULATIONS, ANALYSES, TEST METHODS, OR MATERIALS DEVELOPED OR SELECTED BY THE SUPPLIER AND DOES NOT RELIEVE SUPPLIER FROM FULL COMPLIANCE WITH CONTRACTUAL OBLIGATIONS.

REVIEWED	M	P	ML	H	MH	E	C&I	CS&A	PD	PT	ESH

G-321 DOCUMENT CATEGORY 4.1
[From Supplement A to G-321-E (E) or G-321-V (V), as applicable]
RESPONSIBLE ENGINEER _____ DATE 4/5/05

KV 04/08/05

4/23/03 4-24-03
(B) Processed/Data Entry ☒ Copied/QA ☒ Scanned ☐ Filed
(A) CL 4/22/03
(C) CL 4.23.03

4/1/03 4.1.03
(B) Processed/Data Entry ☒ Copied/QA ☐ Scanned ☐ Filed
(A) AMS 6-17-03
(C) 6/17/03

R10242448

~~24590-QL-SRA-MTF5-00001-29-17~~ RWCOA ✓ 04/08/05

NOTES:
1. ALL WELDS TO BE 316L UNLESS NOTED OTHERWISE.
2. WORK WITH DWG #1, #2 & #3.

PTF-N03, N03A, N03B, N03C
1" PIPE ASSEMBLY

CERTIFIED AS BUILT
CONTRACT DRAWING
DATE: 4/5/05
SIGNED: B.A. Balcom

CBI

~~N3, 6" SPARE, CAPPED~~
WASTE FEED RECEIPT
VESSEL FIN-VSL-00002B (A)
RICHLAND, WA

CUSTOMER'S NO
BY TSJ CHKD CSI DATE 9/9/02
PVE/B.&R. BALCOMB
ENGINEERING ASSIGNED

CONTRACT NO 1372020
DWG 12 REV 2
SHT 1

24590-QL-SRA-MTF5-00001-29-17
REV 00 B

24590-WTP-DVDCN-MS-11-00007 REV 1

CBI RECEIVED
APR 05 2005

REVISE BY RPP-WTP

REVISE BY RPP-WTP

SHIP PC	MARK	ASSM PC	DESCRIPTION	LENGTH	SPEC	ID	EST WT LBS
1	18-A		1" DIA NOZZLE ASSEMBLY				411
	18-1	1	PIPE 1 DIA. SCH 160S X SK	4'-0	M3	A	12
	18-2	1	PIPE 1 DIA. SCH 160S X SK	4'-0	M3	A	12
	18-3	1	PIPE 6 DIA. SCH 80S X SK	7 1/2	M3	A	17
	18-4	1	PL 5 23/32 O.D. X 1/2 X SK		M1	A	4
	18-5	11	PL 4 1/2 X 1/2 X SK	2 1/2	M1	A	16
	18-6	1	PIPE 1 DIA. SCH 160S BBE	36'-10 5/16	M3	A	110
	18-7	1	PIPE 1 DIA. SCH 160S BBE	38'-1 5/16	M3	A	114
	18-8	1	PL 6-5/8 O.D. X 1/2 X SK		M1	A	5
	18-10	1	PIPE 1 DIA. SCH 80S X SK	10'-1 3/16	M3	A	27
	18-11	2	CONC REDUCER 2 X 1 SCH160S SMLS BW		M7	A	3
	18-12	2	PIPE 2 DIA. SCH 160S X SK	9	M3	A	0
	18-13	1	PIPE 1 DIA. SCH 160S X SK	1'-0	M3	A	0
3	18-9		PL 3 X 1/2 X SK	4'-0	M1	A	63
3	18-22		PL 3 X 1/2 X SK	4'-0	M1	A	63
3	18-23		PL 3 X 1/2 X SK	2 3/8	M1	A	3

M1 = SA240 316L. CBI SPEC A240 2404 REV 1
M3=SA312 TP316L. CBI SPEC A-312-2406 REV 2
M7=SA403 316L WPS. CBI SPEC A-403-3423 REV 2

ADD BY RPP-WTP

REVISE BY RPP-WTP

DELETE BY RPP-WTP

AS-BUILT NOTE:

"ACTUAL" DIMENSION RECORDED FOR VARIATION OF AS-BUILT BOTTOM AND TOP HEADS.

ADD ITEMS 24 THRU 30 TO BOM BY RPP-WTP
24590-QL-SRA-MTF5-00001- 29-21
REV 00 I

DELETE BY RPP-WTP

R10242460

NOTES:
1. ALL WELDS TO BE 316L UNLESS NOTED OTHERWISE.
2. WORK WITH DWG #1, #2, & #3
3. SHOP SLIP ON PC MK (8) TO BE WELDED ON PC MK (6), (7), & (10) BEFORE WELDING PC MK (11) TO PC MK (6) & (7)

CERTIFIED AS BUILT CONTRACT DRAWING
DATE: 4/5/05
SIGNED: B.A. Bulkowski

N70, N70A, N70B, N70C
1" PIPE ASSEMBLY
WASTE FEED RECEIPT D
VESSEL FRP-VSL-00002A (0) 4/1/04
RICHLAND, WA

CUSTOMER'S NO
BY TSJ CHKD CST DATE 3/18/02
PYE/ B.A. BALCOMB
ENGINEERING ASSIGNED

CONTRACT NO 1372020
DWG 18 REV 10
SHT 1

20218010.DGN

29-21H

REVISE BY RPP-WTP

DELETE BY RPP-WTP

DELETE AND REMOVE ITEMS
8, 9, 22 AND 23 BY RPP-WTP

DELETE BY RPP-WTP

CERTIFIED AS BUILT
CONTRACT DRAWING
DATE: 4/5/05
SIGNED: [illegible]

N70, N70A-C 1" PIPE ASSEMBLY
WASTE FEED RECEIPT
VESSEL FRP-VSL-00002D (Q)
RICHLAND, WA

CONTRACT NO 137202D
DWG 18 REV 8
SHT 2

R10242455

24590-QL-SRA-MTF5-00001-29-22 REV 00 H

20218020.DGN

24590-QL-SRA-MTF5-00001-29-22 KV REV. 00G 06/08/05

29-22 G

CBI RECEIVED
APR 05 2005

DELETE AND REPLACE WITH NEW SUPPORTS BY RPP-WTP

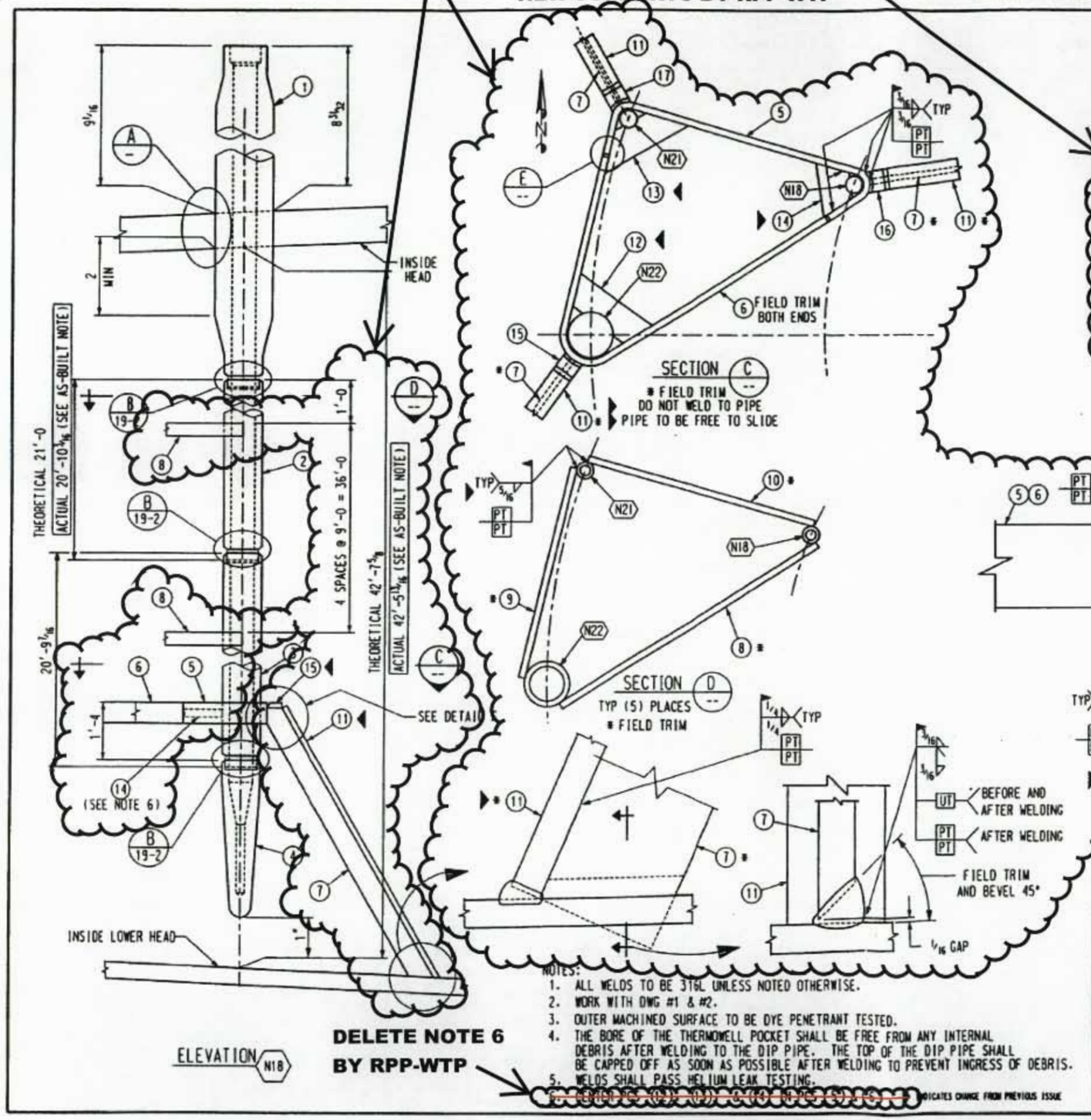

SHIP PC	MARK	ASSM PC	DESCRIPTION	LENGTH	SPEC	ID	EST WT LBS
1	19-A		3/4" DIA NOZZLE ASSEMBLY				138
	19-1	1	FORGING 2" DIA X SK SEE DWG #19	1'-3	SA182 F316L, CBI S	A	12
	19-2	1	PIPE 1 DIA. SCH 160S X SK	21'-0	SA312 TP316L, CBI	A	62
	19-3	1	PIPE 1 DIA. SCH 160S X SK	20'-9 7/16	SA312 TP316L, CBI	A	62
	19-4	1	FORGING 1.3" OD X SK	5'-0	SA182 F316L, CBI S	A	[illegible]
1	19-5		PL 2 X 1/2 X SK	2'-4 1/8	M1	A	8
1	19-6		PL 2 X 1/2 X SK	3'-9	M1	A	13
3	19-7		PL 2 X 1/2 X SK	2'-6	M1	A	27
5	19-8		PL 2 X 1/2	2'-3	M1	A	40
5	19-9		PL 2 X 1/2	1'-9	M1	A	30
5	19-10		PL 2 X 1/2	2'-0	M1	A	35
3	19-11		PL 2 X 1/2 X SK	2'-6	M1	A	27
1	19-12		PL 3 X 1/2 X SK	8 7/16	M1	A	1
1	19-13		PL 3 X 1/2 X SK	9 1/8	M1	A	1
1	19-14		PL 3 X 1/2 X SK	5 1/8	M1	A	1
1	19-15		PL 3 X 1/2 X SK	2	M1	A	1
1	19-16		PL 3 X 1/2 X SK	2 15/16	M1	A	1
1	19-17		PL 3 X 1/2 X SK	2 7/16	M1	A	1
			M1 = SA240 316L, CBI SPEC A240 2404				
			SA182 F316L, CBI SPEC A-182-2405				
			REV 1=CBI SPEC SHEET				
			SA312 TP316L, CBI SPEC A-312-2406				
			REV 2=SA312 TP316L MS				

R10242453

AS-BUILT NOTE:

"ACTUAL" DIMENSION RECORDED FOR VARIATION OF AS-BUILT BOTTOM AND TOP HEADS.

NOTES:
1. ALL WELDS TO BE 316L UNLESS NOTED OTHERWISE.
2. WORK WITH DWG #1 & #2.
3. OUTER MACHINED SURFACE TO BE DYE PENETRANT TESTED.
4. THE BORE OF THE THERMOWELL POCKET SHALL BE FREE FROM ANY INTERNAL DEBRIS AFTER WELDING TO THE DIP PIPE. THE TOP OF THE DIP PIPE SHALL BE CAPPED OFF AS SOON AS POSSIBLE AFTER WELDING TO PREVENT INGRESS OF DEBRIS.
5. WELDS SHALL PASS HELIUM LEAK TESTING.
6. ~~CENTER PC (12) (13) & (14) (PC (5)) (6)~~ INDICATES CHANGE FROM PREVIOUS ISSUE

DELETE NOTE 6 BY RPP-WTP

CERTIFIED AS BUILT CONTRACT DRAWING
DATE: 4/5/05
SIGNED: B.R. Balcomb

CBI

N18 3/4" DIA TEMPERATURE WASTE FEED RECEIPT
VESSEL FRP-VSL-00002D (Q)
RICHLAND, WA

CUSTOMER'S NO
BY TSJ CHKD CST DATE 10/10/02
PYE/ B.R. BALCOMB
ENGINEERING ASSIGNED

CONTRACT NO 137202D
DWG 19 REV 7
SHT 1

20219010.DGN

24590-QL-SRA-MTF5-00001-29-23
REV 00 H

29-23G

~~24590-QL-SRA-MTF5-00001-29-23~~
~~REV. 00~~
KV 06/08/05

DELETE ITEMS 5, 6, 12, 13, 14, 15, 16, 17 AND SECTION X-X BY RPP-WTP

CBI RECEIVED
APR 0 5 2005

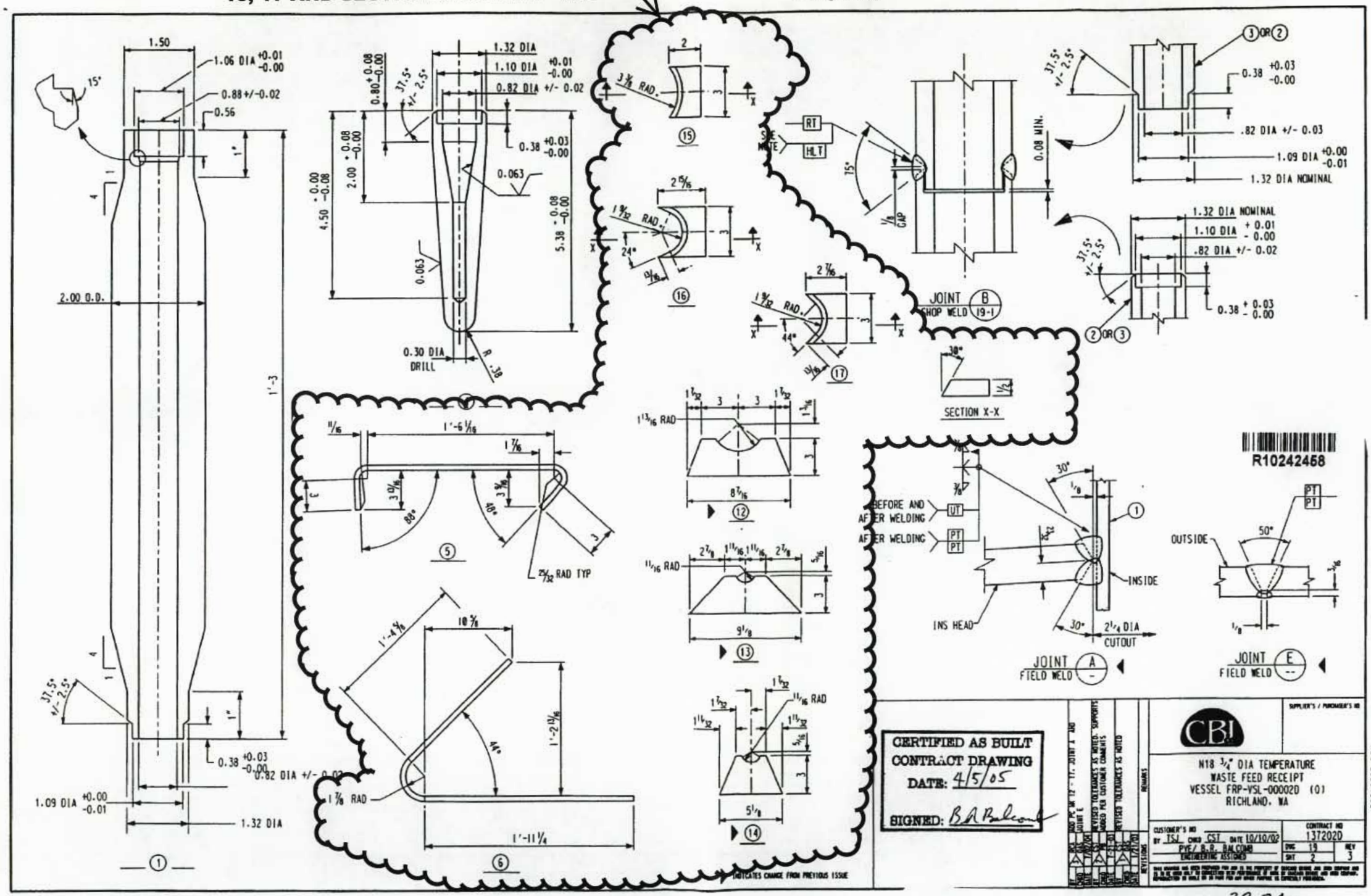

R10242458

CERTIFIED AS BUILT
CONTRACT DRAWING
DATE: 4/5/05
SIGNED: B.A. Balcom

CBI

N18 3/4" DIA TEMPERATURE
WASTE FEED RECEIPT
VESSEL FRP-VSL-00002D (0)
RICHLAND, WA

CUSTOMER'S NO
BY ISL CHKD CST DATE 10/10/02
PYE / B.R. BALCOM
ENGINEERING ASSIGNED

CONTRACT NO 1372020
DWG 19 REV 3
SHT 2

20219020.DGN

24590-QL-SRA-MTF5-00001-20-24 REV 00D

~~24590-QL-SRA-MTF5-00001-29-24~~
~~REV. 00C~~ KV 06/08/05

29-24C

CBI RECEIVED
APR 0 5 2005

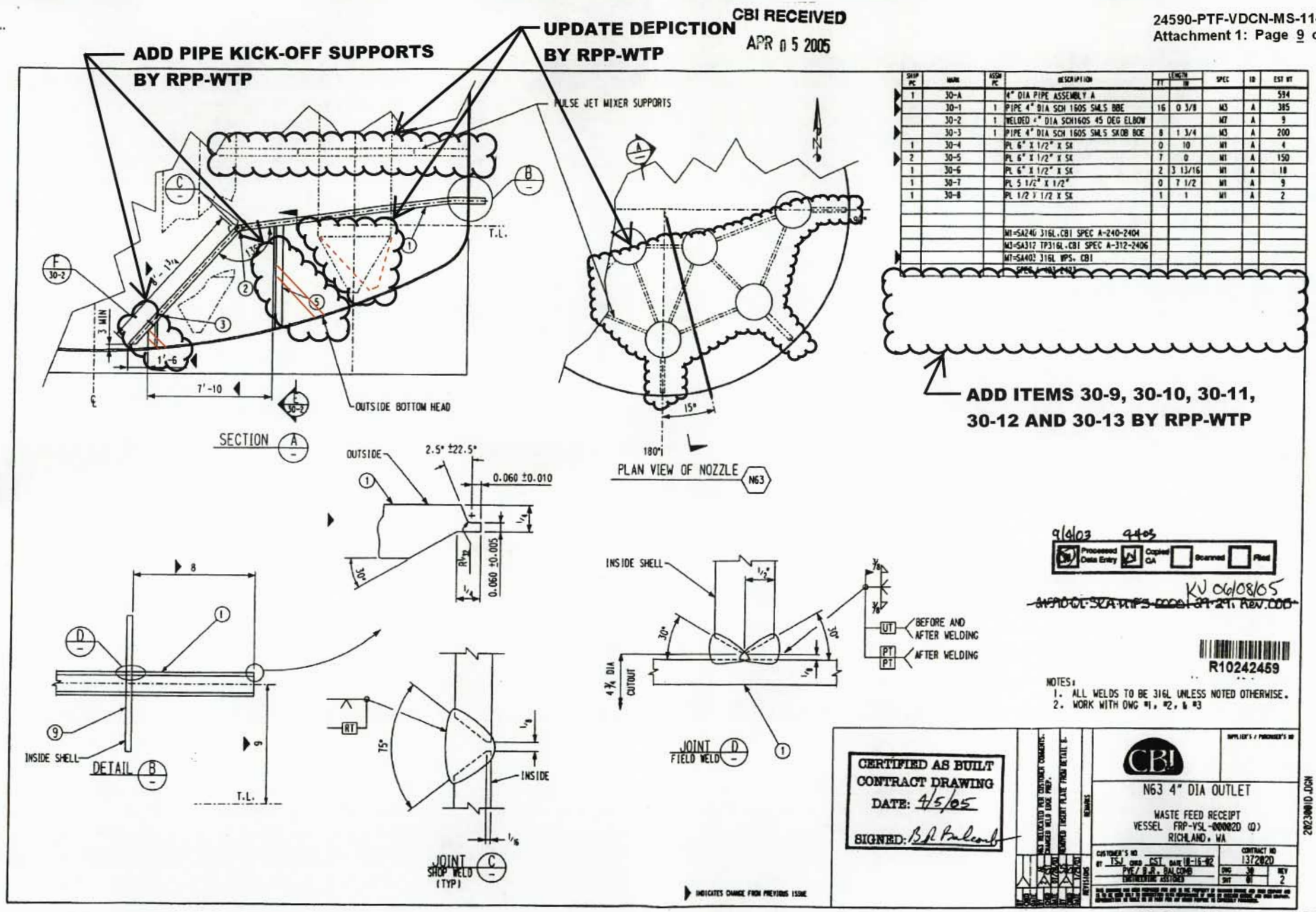

SHIP PC	MARK	ASSM PC	DESCRIPTION	LENGTH FT	LENGTH IN	SPEC	ID	EST WT
1	30-A		4" DIA PIPE ASSEMBLY A					594
	30-1	1	PIPE 4" DIA SCH 160S SMLS BBE	16	0 3/8	M3	A	385
	30-2	1	WELDED 4" DIA SCH160S 45 DEG ELBOW			M7	A	9
	30-3	1	PIPE 4" DIA SCH 160S SMLS SKOB BOE	8	1 3/4	M3	A	200
1	30-4		PL 6" X 1/2" X SK	0	10	M1	A	4
2	30-5		PL 6" X 1/2" X SK	7	0	M1	A	150
1	30-6		PL 6" X 1/2" X SK	2	3 13/16	M1	A	18
1	30-7		PL 5 1/2" X 1/2"	0	7 1/2	M1	A	9
1	30-8		PL 1/2 X 1/2 X SK	1	1	M1	A	2
			M1=SA240 316L.CBI SPEC A-240-2404					
			M3=SA312 TP316L.CBI SPEC A-312-2406					
			MT=SA403 316L WPS. CBI SPEC A-403-2423					

NOTES:
1. ALL WELDS TO BE 316L UNLESS NOTED OTHERWISE.
2. WORK WITH DWG #1, #2, & #3

CBI RECEIVED
APR 05 2005

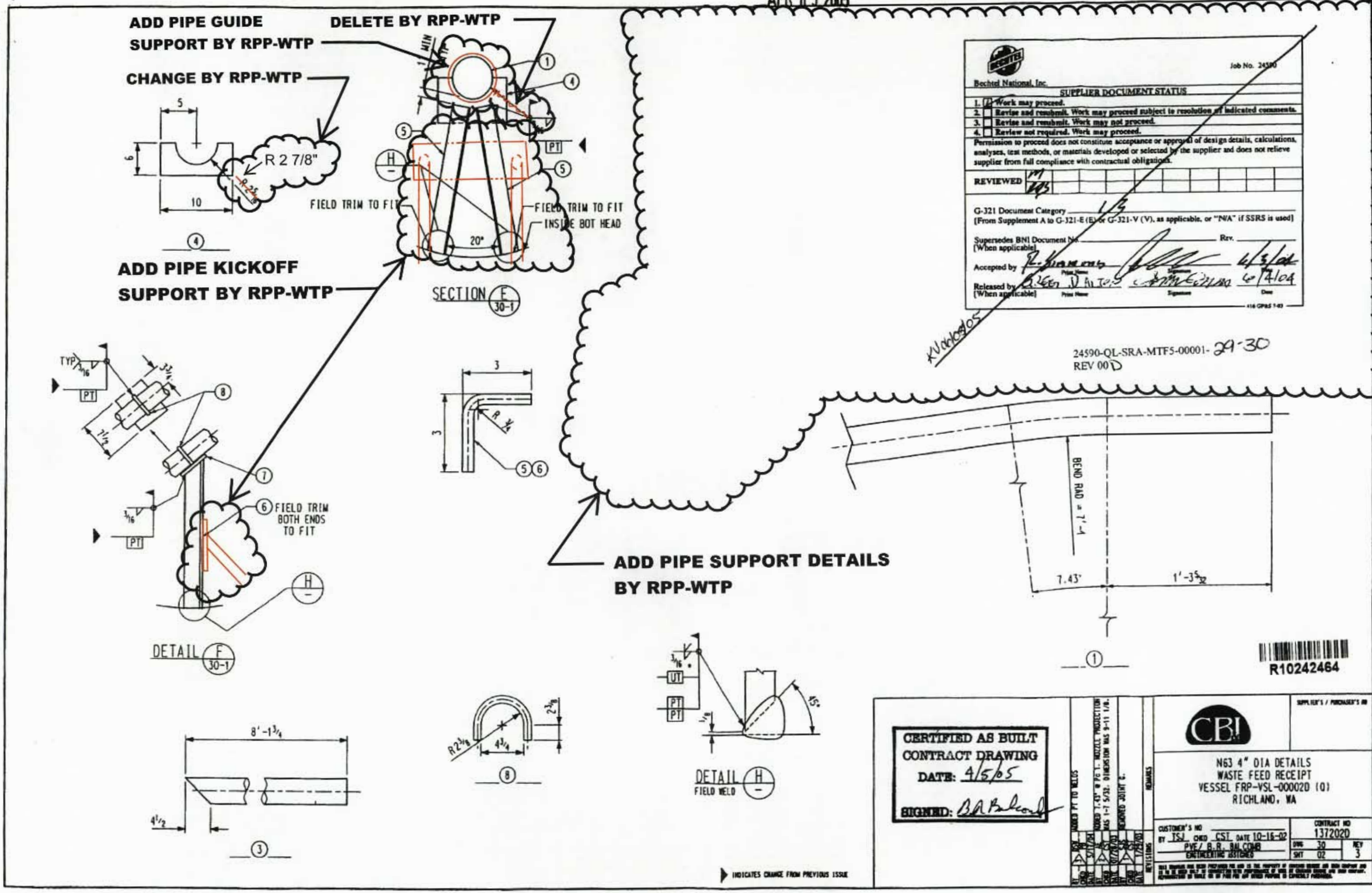

Bechtel National, Inc.

Job No. 24590

SUPPLIER DOCUMENT STATUS

1. [✓] Work may proceed.
2. [ ] Revise and resubmit. Work may proceed subject to resolution of indicated comments.
3. [ ] Revise and resubmit. Work may not proceed.
4. [ ] Review not required. Work may proceed.

Permission to proceed does not constitute acceptance or approval of design details, calculations, analyses, test methods, or materials developed or selected by the supplier and does not relieve supplier from full compliance with contractual obligations.

REVIEWED

G-321 Document Category 1/3
[From Supplement A to G-321-E (E) or G-321-V (V), as applicable, or "N/A" if SSRS is used]

Supersedes BNI Document No. _____ Rev. _____
[When applicable]

Accepted by _____ Print Name _____ Signature _____ Date 6/3/04

Released by _____ Print Name _____ Signature _____ Date 6/4/04
[When applicable]

KV 06/09/05

24590-QL-SRA-MTF5-00001- 29-30
REV 00D

DELETE AND REPLACE WITH DIP
PIPE SUPPORT DETAILS BY RPP-WTP
IN CROSS HATCH AREA

SHIP'G PC	MARK	ASSM PC	DESCRIPTION	LENGTH	SPEC	GD	EST WT LBS
12	18-5		PL 2 1/2 X 1/2	2 1/2	M1	A	12
* 2	18-14		L 2 1/2 X 2 1/2 X 1/4	8' 6	M9	A	58
* 2	18-15		L 2 1/2 X 2 1/2 X 1/4	5' 0	M9	A	34
* 4	18-16		L 2 X 2 X 1/4	2' 8	M9	A	36
* 4	18-17		L 2 X 2 X 1/4	2' 6	M9	A	35
* 4	18-19		PL 2 1/2 X 1/2	3	M1	A	4
* 4	18-19		L 2 X 2 X 1/4	7	M9	A	12
* 4	18-20		L 2 X 2 X 1/4	2' 9	M9	A	40
* 2	18-21		L 2 X 2 X 1/4	4' 0	M9	A	25
			M1 = SA240 316L, CBI SPEC A240 2404				
			M1 = SA240 316L, CBI SPEC A240 2404				
			M9= SA479 316L CBI SPEC A-479 2570				

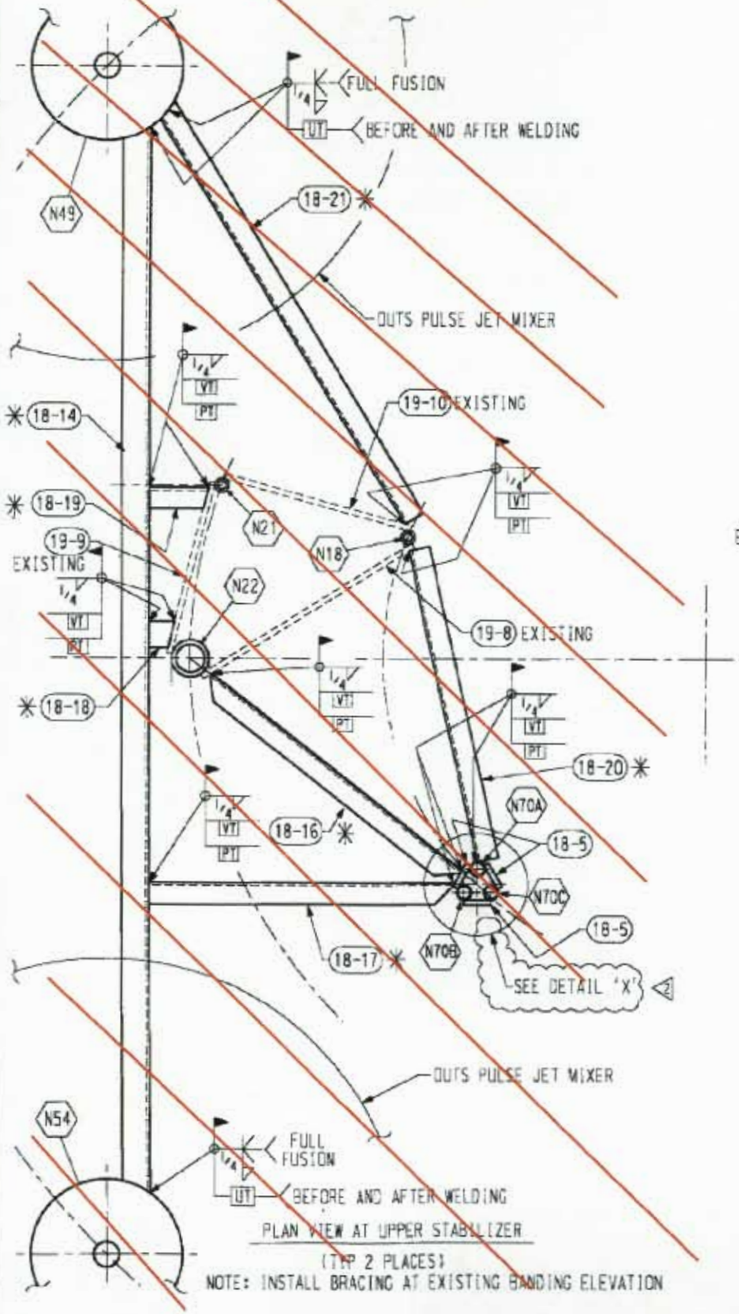

PLAN VIEW AT UPPER STABILIZER
(TYP 2 PLACES)
NOTE: INSTALL BRACING AT EXISTING BANDING ELEVATION

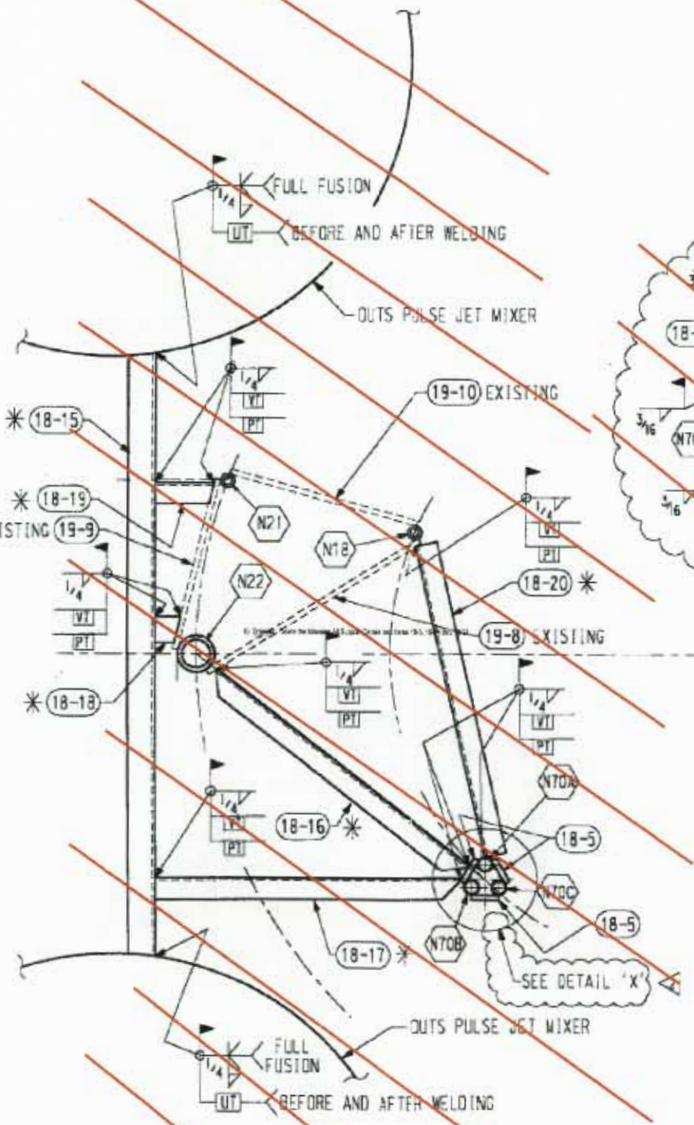

PLAN VIEW AT LOWER STABILIZER
(TYP 2 PLACES)
NOTE: INSTALL BRACING AT EXISTING BANDING ELEVATION

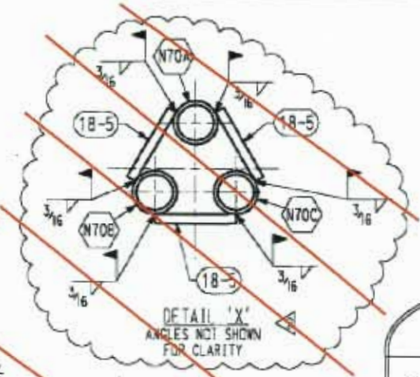

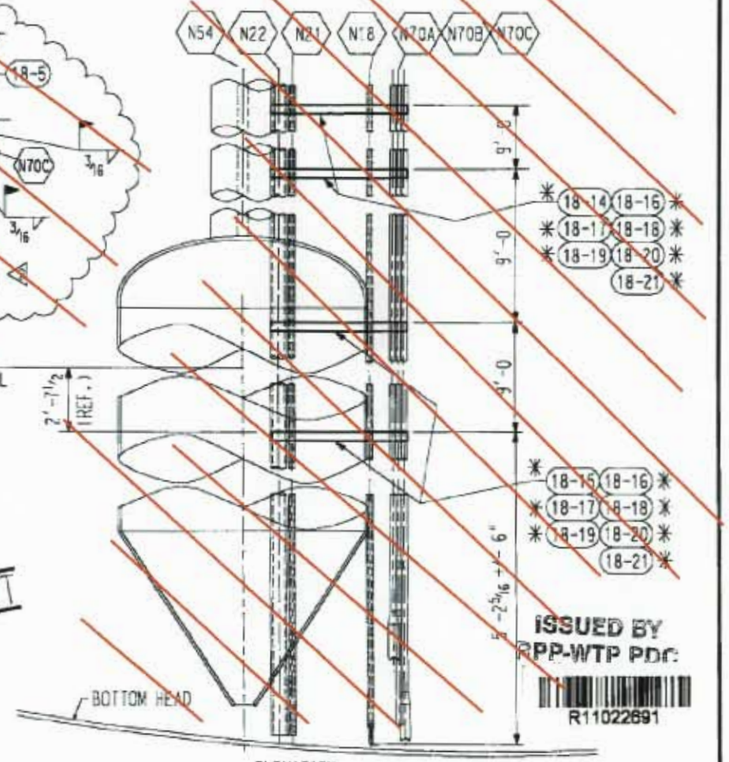

NOTES:
1. ALL WELDS TO BE 316L UNLESS NOTED OTHERWISE.
2. WORK WITH DWG #1 SHT 1, #2 SHT 1, #18 SHT 1, & 2, & #19 SHT 1 & 2.
* 3. BILLED WITH ADDED MATERIAL FOR FIELD TRIM.

▶ INDICATES CHANGE FROM PREVIOUS ISSUE

AS-BUILT

CERTIFIED AS BUILT
CONTRACT DRAWING
DATE: 9/13/10
SIGNED: Billy A Balcomb

ISSUED BY
RPP-WTP PDC
R11022691

24590-QL-SKA-XTCS-00001-29-00073-K

BY	CHKD	DATE	REVISIONS
RCA			ADDED DETAIL 'Y'
RCA			AS-BUILT
RCA			ADDED PC MK'S 18-20 & 18-21, REVISED WELD SIZE AND REVISED BILLING

CBI
SUPPLIER'S / PURCHASER'S NO

PTF - LATERAL SUPPORTS
FOR DIP PIPE
WASTE FEED RECEIPT
VESSEL FRP-VSL-00002D (Q)
RICHLAND, WA

CUSTOMER'S NO
BY RCA CHKD PB DATE 6/16/04
PVE/ B.R. BALCOMB
ENGINEERING ASSIGNED

CONTRACT NO 1372020
DWG 18 REV 2
SHT 3

THIS DRAWING HAS BEEN PREPARED FOR AND IS THE PROPERTY OF CHICAGO BRIDGE AND IRON COMPANY AND IS TO BE USED ONLY IN CONNECTION WITH PERFORMANCE OF WORK BY CHICAGO BRIDGE AND IRON COMPANY. REPRODUCTION IN WHOLE OR IN PART FOR ANY OTHER PURPOSE IS EXPRESSLY PROHIBITED.

20218030.DGN

ON REFERENCE DRAWING 24590-QL-SRA-MTF5-00001-29-06

SHIP PC	MARK	ASSY PC	DESCRIPTION	LENGTH	SPEC	ID	EST WT
* 64	5-4		PLATE SK 1" (.28 3/16" x 1.0" x 38 13/16")		M1		
			M1= ASME SA240 TP 316/316L				
			* NOMINALLY 64 PIECES				

1. TYPICAL, 1" WELD SIZE MAY BE REDUCED WHEN BRIDGING WELDS DEPICTED IN DETAIL F.
2. CONTOUR TO MATCH VESSEL BOTTOM HEAD, GAP BETWEEN STIFFENER PLATE AND VESSEL BOTTOM HEAD AS MEASURED THROUGH FILL AND VENT HOLES, SHALL NOT EXCEED 1/4".
   NOTE: WIDTH OF PLATES MAY BE ADJUSTED TO SHIFT WELD LOCATIONS OR TO CREAT LARGER PLATES TO REDUCE TOTAL NUMBER OF STIFFENERS PLATES. DETAIL F SEAMS SHALL NOT BE LOCATED CLOSER THAN 3" FROM SEAMS IN BOTTOM THAT RUN PARALLEL TO DETAIL F SEAMS.
3. LOCATE 1 FILL AND 1 VENT HOLE, APPROX. AS SHOWN, NOMINALLY 10" FROM CORNER OF STIFFENER PLATES PLATE (PART #5-4). FILL GAPS BEHIND STIFFENER PLATES (PART #5-4) WITH GROUT UNTIL GROUT BLEEDS FROM VENT HOLES. AFTER GROUT SETS, DRILL OUT GROUT FROM FILL AND VENT HOLES MIN. 3/4" DEEP. PLUG WELD HOLES CLOSED MIN. OF 1/2" DEEP. HOLES MAY BE SIZED/TAPPED AS NEEDED UP TO 1" Ø, TO FACILITATE INSTALLATION OF GROUT.

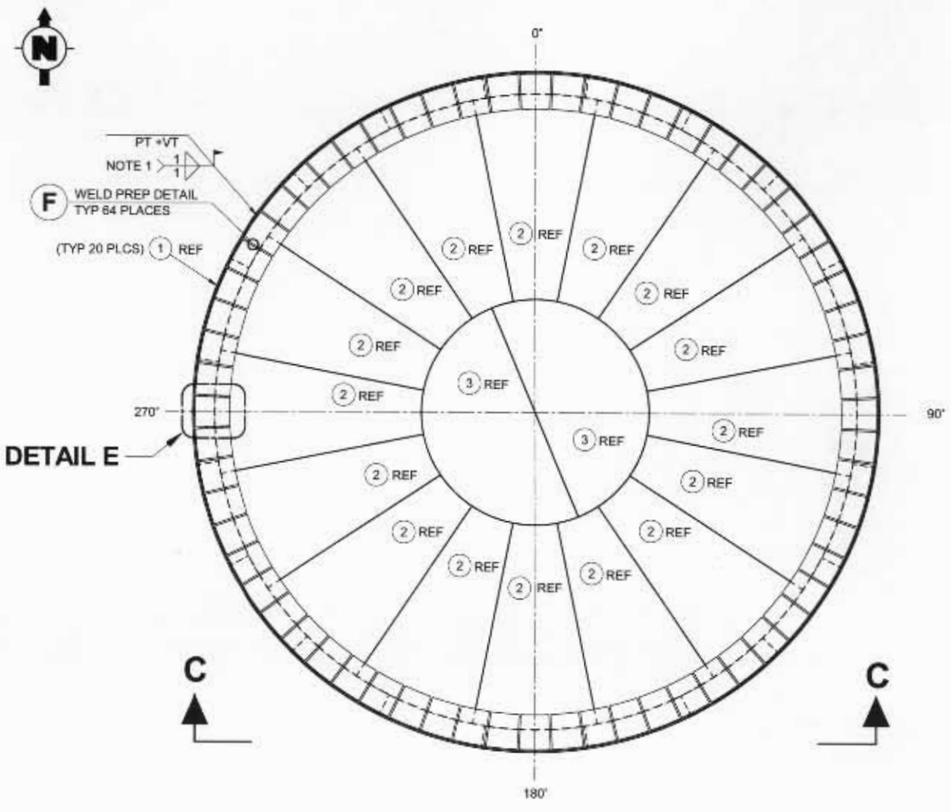

PLAN
INSIDE LOOKING DOWN

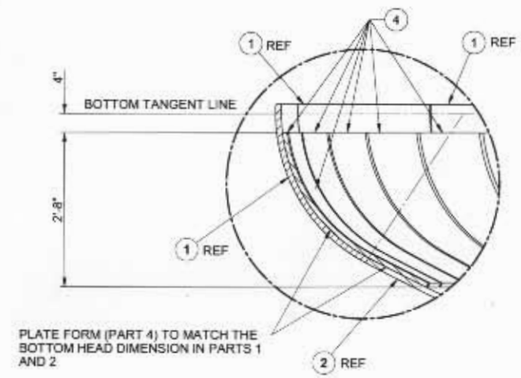

DETAIL D

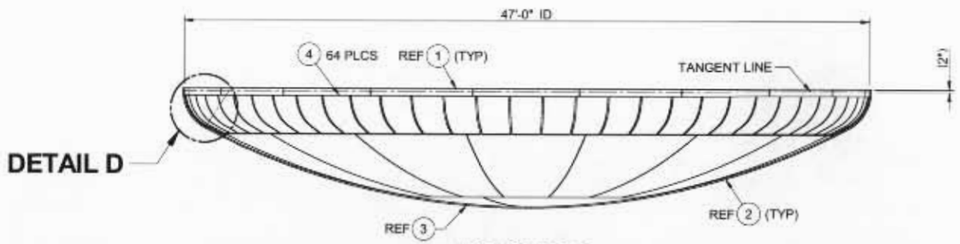

VIEW C-C

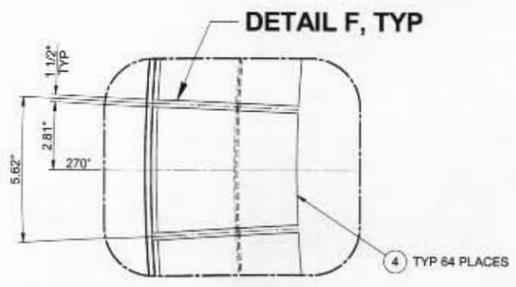

DETAIL E

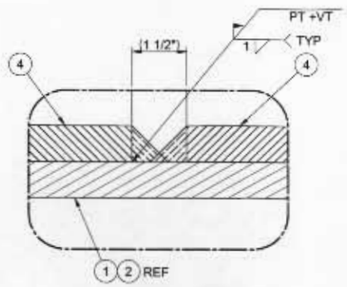

DETAIL F

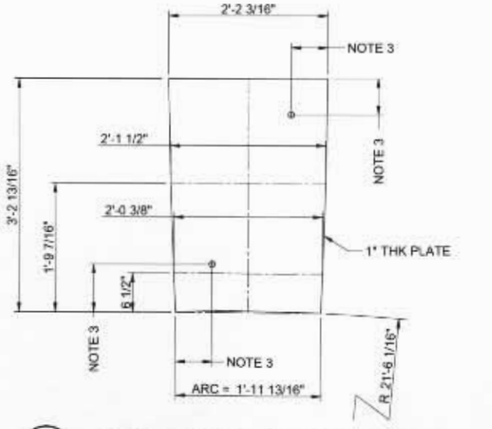

4 KNUCKLE STIFFENER PLATE
(FLAT PLATE BEFORE BEND)
(NOTE 2)

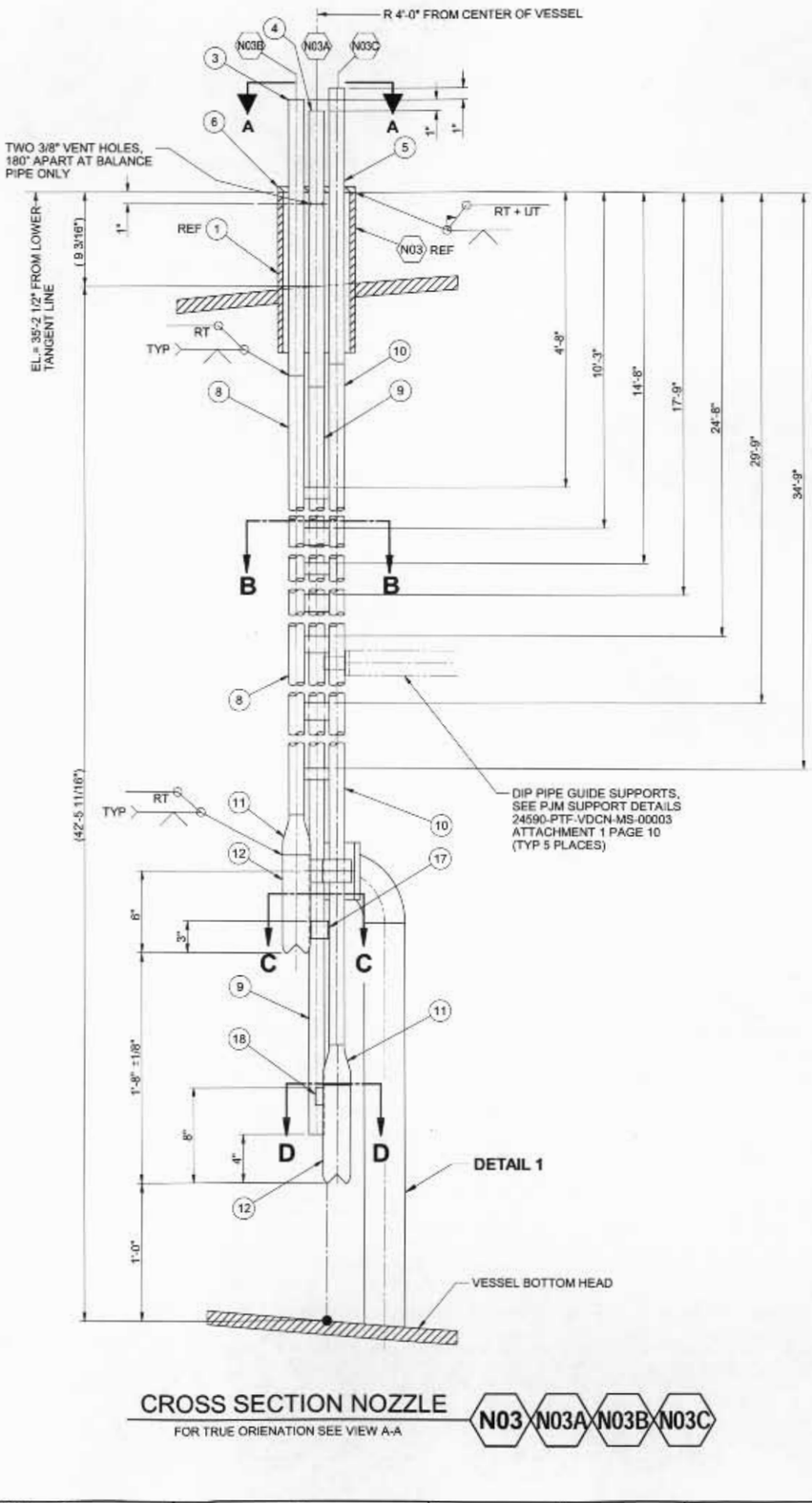

CROSS SECTION NOZZLE
FOR TRUE ORIENATION SEE VIEW A-A
N03 N03A N03B N03C

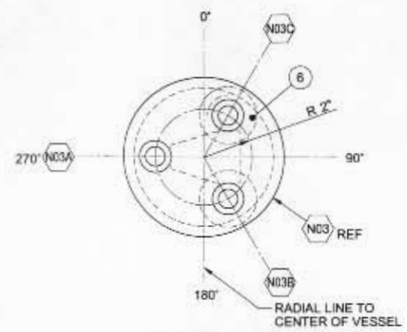

VIEW A-A

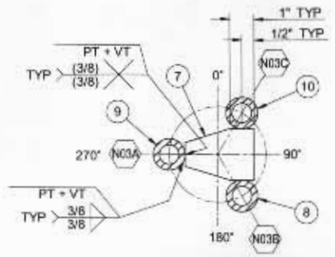

SECTION B-B
TYP 7 PLACES

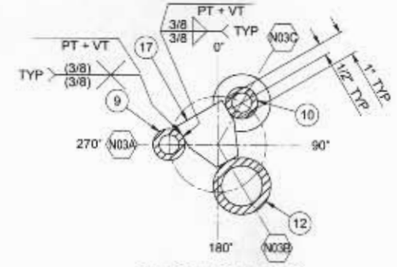

SECTION C-C

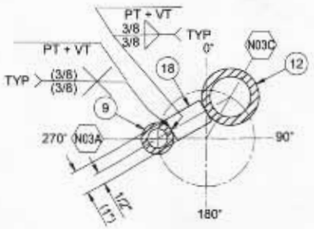

SECTION D-D

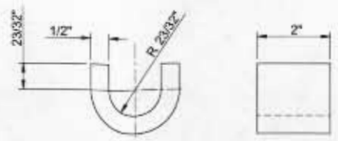

16 PIPE GUIDE STRAP

ON REFERENCE DRAWING 24590-QL-SRA-MTF5-00001-29-17

SHIP PC	MARK	ASSY PC	DESCRIPTION	LENGTH	SPEC.	ID	EST WT
	12-3	1	PIPE 1" SCHED 160S	4'- 0"	M3		
	12-4	1	PIPE 1" SCHED 160S	4'- 0"	M3		
	12-5	1	PIPE 1" SCHED 160S	4'- 0"	M3		
	12-6	1	PLATE 6 5/8" DIAMETER x 1/2" THK		M1		
	12-7	7	PLATE 1 1/2" THK	AS REQD	M1		
	12-8	1	PIPE 1" SCHED 160S	37'-4 1/8"	M3		
	12-9	1	PIPE 1" SCHED 160S	38'-7 1/8"	M3		
	12-10	1	PIPE 1" SCHED 160S	38'-1 1/8"	M3		
	12-11	2	CONC REDUCER 2" x 1" SCHED 160S SMLS BW		M2		
	12-12	2	PIPE 2" SCHED 160S	9"	M3		
	12-13	1	PIPE 3" SCHED 80S	2'-10 3/16"	M3		
	12-14	1	ELBOW 3" LR SCHED 80S SMLS BW		M2		
	12-15	1	PLATE 5" x 7" x 1/2" THK		M1		
	12-16	2	FLAT BAR 2" x 1/2" THK	3 23/32"	M1		
	12-17	1	PLATE 1 1/2" THK	AS REQD	M1		
	12-18	1	BAR 1" WIDE x 1 1/2" THK	AS REQD	M1		
			M1 = ASME SA240 TP 316/316L				
			M2 = ASME SA403 316L WPS				
			M3 = ASME SA312 TP 316/316L				

NOTES:

1. PIPE GUIDE STRAPS ARE WELDED AFTER CORRECTLY POSITIONING THE PIPE GUIDE STRAP SUPPORTS.PIPE GUIDE STRAP SHALL MAINTAIN 1/16" DIAMETRICAL CLEARANCE WITH PIPE.
2. TOLERANCE ON STRAP ELEVATIONS (PART 12-7) IS ±2".

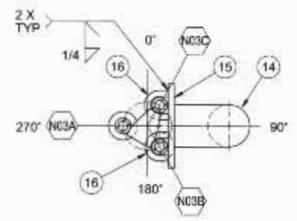

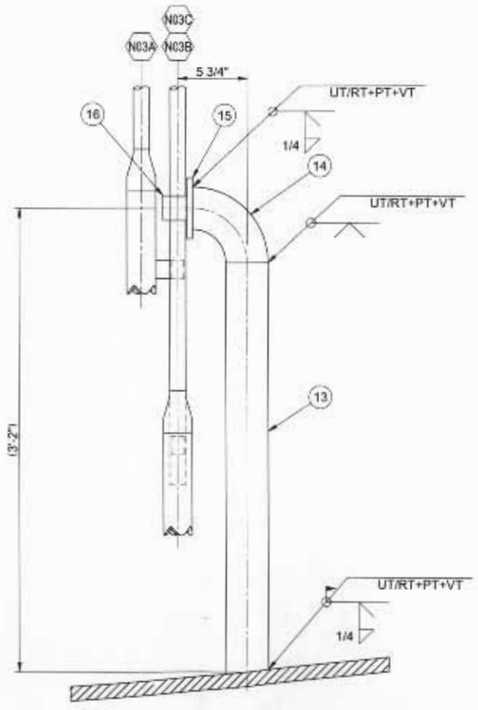

DETAIL 1

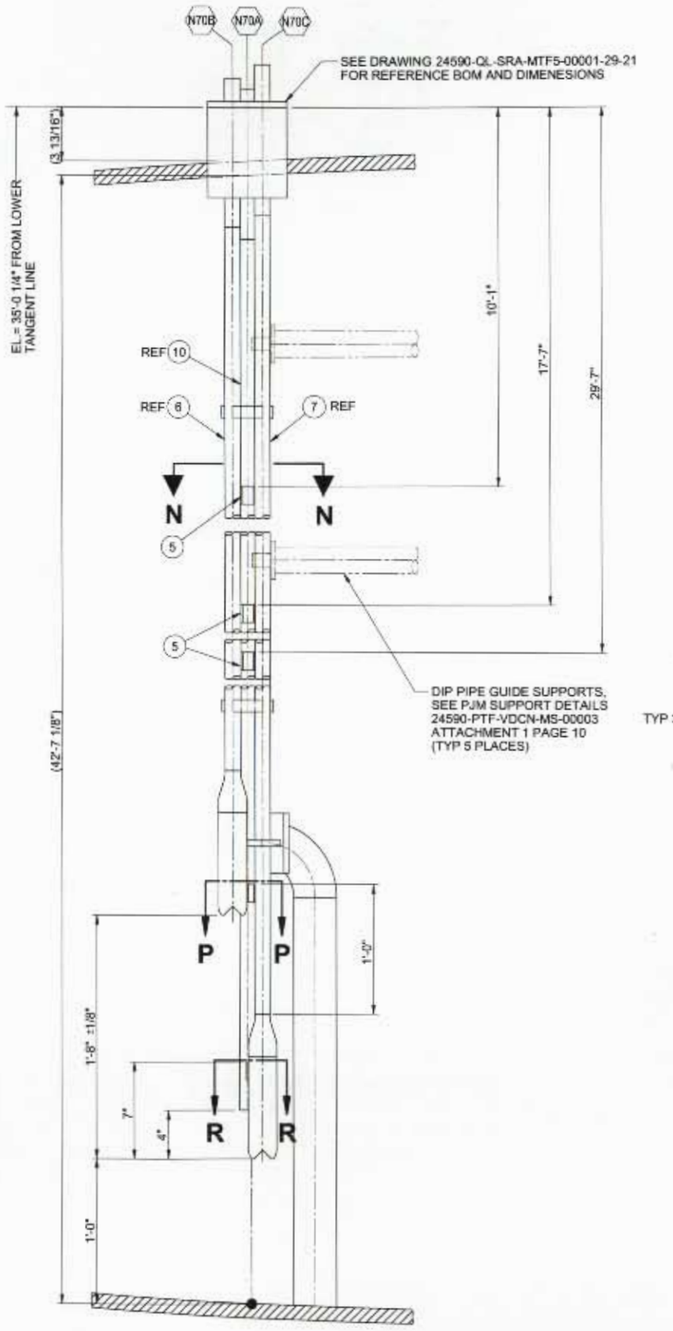

CROSS SECTION NOZZLE N70 N70A N70B N70C REF
FOR TRUE ORIENATION SEE VIEW A-A

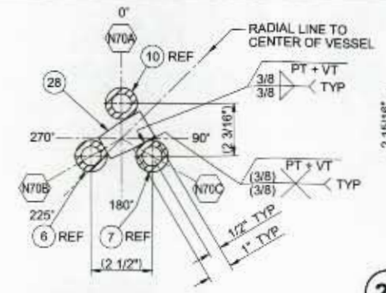

SECTION N-N

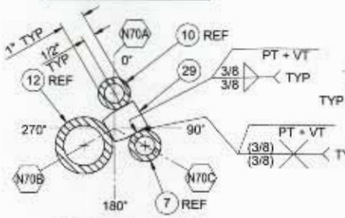

SECTION P-P

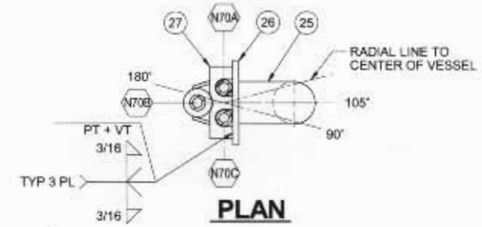

PLAN

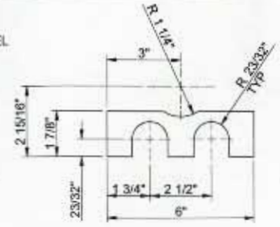

27 PIPE GUIDE PLATE

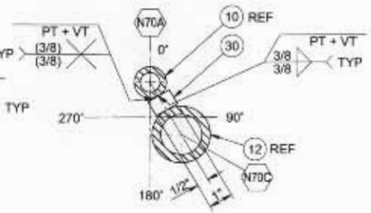

SECTION R-R

ON REFERENCE DRAWING 24590-QL-SRA-MTF5-00001-29-21

SHIP PC	MARK	ASSY PC	DESCRIPTION	LENGTH	SPEC	ID	EST WT
	18-24	1	PIPE 3" SCHED 80S	2'-9 3/16"	M3		
	18-25	1	ELBOW 3" LR SCHED 80S SMLS BW		M2		
	18-26	1	PLATE 5" x 7" x 1/2" THK		M1		
	18-27	1	PLATE 1/2" THK	1 7/8" x 6"	M1		
	18-28	3	PLATE 1 1/2" THK	AS REQD			
	18-29	1	PLATE 1 1/2" THK	AS REQD			
	18-30	1	FLAT BAR 1" WIDE x 1 1/2" THK	AS REQD			
			M1 = ASME SA240 TP 316/316L				
			M2 = ASME SA403 316L WPS				
			M3 = ASME SA312 TP 316/316L				

NOTES:

1. PIPE GUIDE STRAPS AND PLATE ARE WELDED AFTER CORRECTLY POSITIONING THE PIPE GUIDE STRAP SUPPORTS.PIPE GUIDE STRAP AND PLATE SHALL MAINTAIN 1/16" DIAMETRICAL CLEARANCE WITH PIPE.
2. THE FABRICATOR MAY LEAVE UP TO 1" OF THE PREVIOUS STEELWORK IN PLACE (I.E. CUT STEELWORK UP TO 1" AWAY FROM UNTOUCHED COMPONENTS) TO AVOID CUTTING/GRINDING INTO UNTOUCHED COMPONENTS (UNLESS OTHERWISE SPECIFICALLY INDICATED IN THIS DRAWING SET) WHERE THIS DRAWING SET INDICATES THAT SUPPORTS, FLANGES, BRACKETS, COMPONENTS, ETC. HAVE BEEN REMOVED BETWEEN THE CURRENT REVISION AND THE PREVIOUS REVISION.
3. TOLERANCE ON STRAP ELEVATION IS ±2".

ON REFERENCE DRAWING 24590-QL-SRA-MTF5-00001-29-23

SHIP PC	MARK	ASSY PC	DESCRIPTION	LENGTH	SPEC	ID	EST WT
	19-18	1	PIPE 3" SCHED 80S	1'-2 3/4"	M3		
	19-19	1	ELBOW 3" LR SCHED 80S SMLS BW		M2		
	19-20	1	PLATE 5" x 5" x 1/2" THK		M1		
	19-21	1	FLAT BAR 2" x 1/2" THK	3 23/32"	M1		
			M1 = ASME SA240 TP 316/316L				
			M2 = ASME SA403 316L WPS				
			M3 = ASME SA312 TP 316/316L				

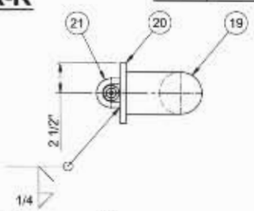

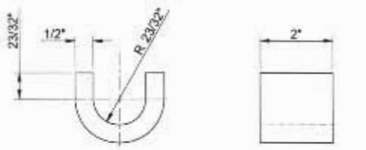

21 PIPE GUIDE STRAP

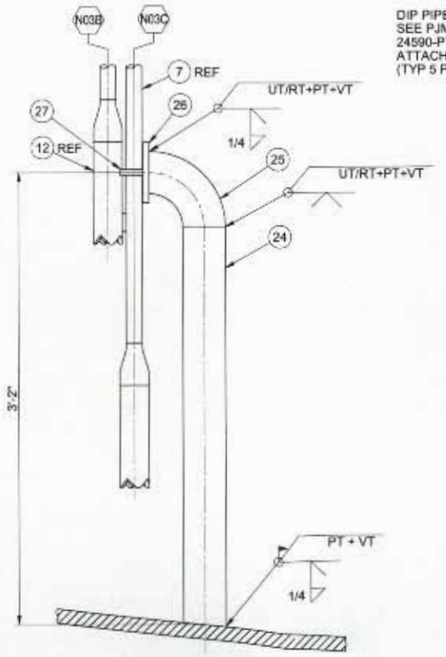

ELEVATION DETAIL 1

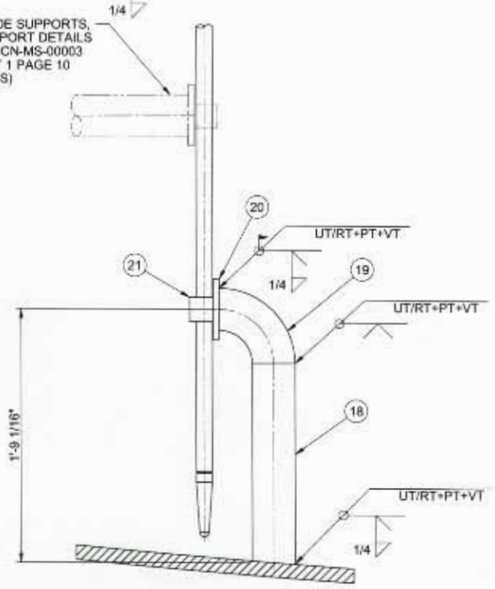

ELEVATION N18

ON REFERENCE DRAWING 24590-QL-SRA-MTF5-00001-29-29

SHIP PC	MARK	ASSY PC	DESCRIPTION	LENGTH FEET	LENGTH INCHES	SPEC.	ID	EST WT
2	30-9		PIPE 3" SCHED 80S *	4	2	M3		
1	30-10		PIPE 3" SCHED 80S *	2	6 1/2	M3		
1	30-11		PLATE 8" x 1/2" THK	2	8	M1		
1	30-12		PLATE 6" X 1/2" THK	0	8	M1		
1	30-13		FLAT BAR 1 1/2" X 1/2" THK	2	5 1/8"	M1		
			M1 = ASME SA240 TP 316/316L					
			M3 = ASME SA312 TP 316/316L					
			* = LENGTH IS ESTIMATED, CUT TO FIT.					

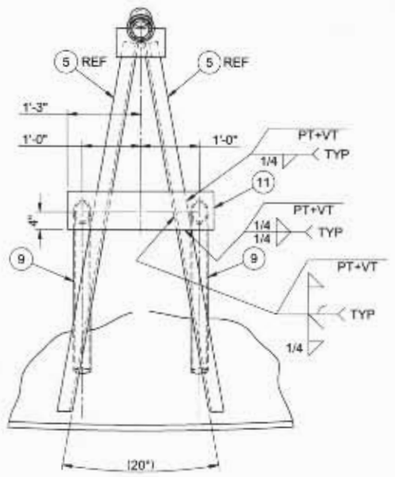

SECTION J-J

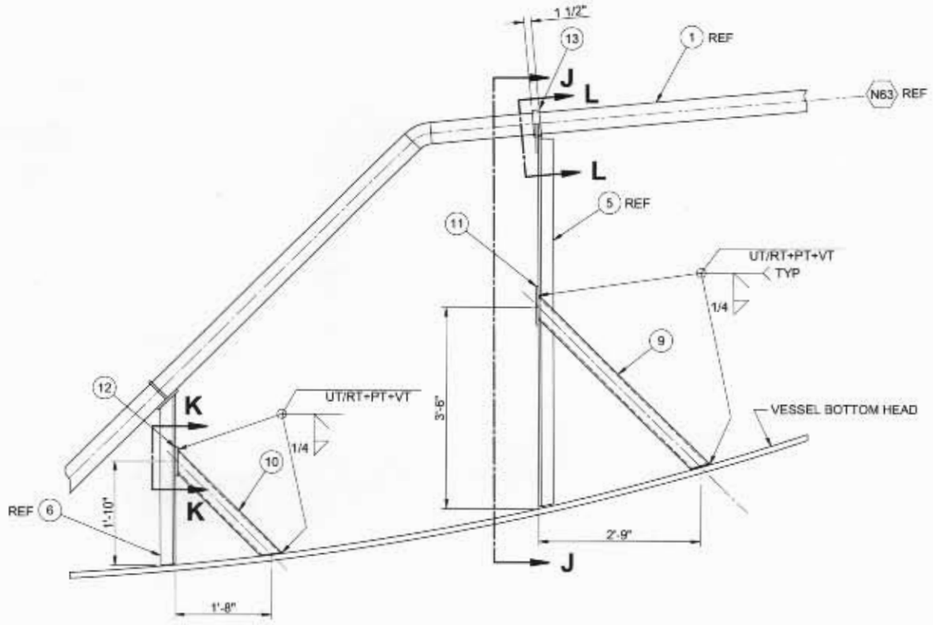

SECTION (A) (SUPPORT MODIFICATION)

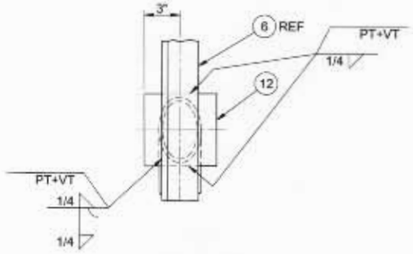

VIEW K-K

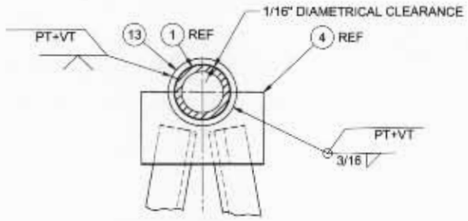

SECTION L-L

CBI RECEIVED
APR 0 5 2005

24590-PTF-VDCN-MS-11-00007
Attachment 1: Page 16 of 16

REVISE BY RPP-WTP ON HOLD 160S

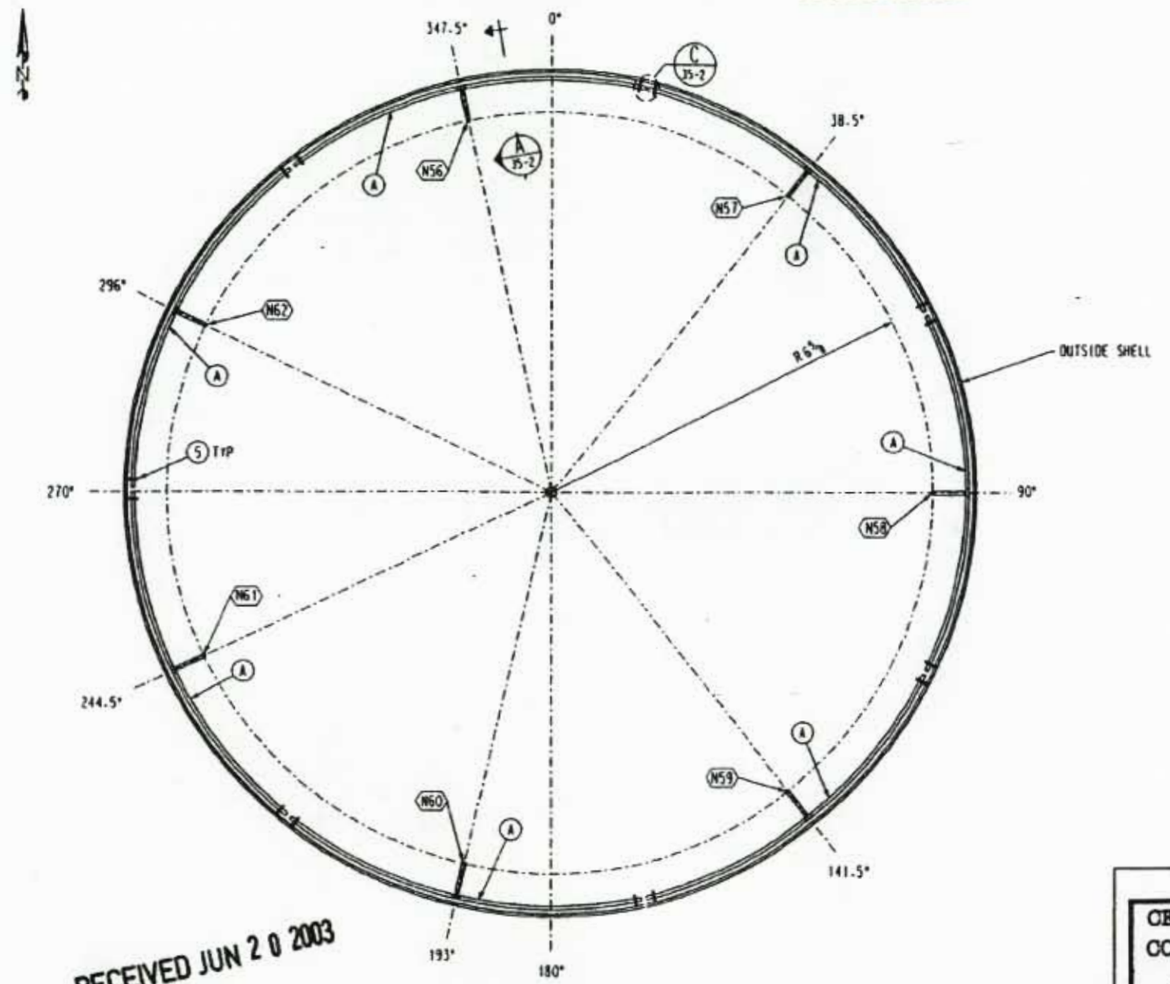

WASH RING PLAN VIEW
N56-N62

SHIP PC	MARK	ASSM PC	DESCRIPTION	LENGTH FT	LENGTH IN	SPEC	ID	EST WT
1	35-A		2" DIA WASH RING ASSEMBLY					672
	35-1	7	PIPE 2" [illegible] 40S X SK SMLS	10	0 25/32	*	C	266
			BOE POE[illegible] 3 -4 [illegible] SHEAR					
	35-2	7	PIPE 2" [illegible] 40S X SK SMLS	10	0 25/32	*	C	266
			BOE POE[illegible] 3 -4 [illegible] SHEAR					
	35-3	7	STRAIGHT TEE 2 X 2 [illegible] 40S [illegible]			M7	A	28
	35-4	14	PL 2 1/16 DIA X 1/2			M1	C	7
	35-6	7	PIPE 2" DIA SCH 160S SMLS BOE SADE	4	2 3/32	M3	A	105
14	35-5		PL 5 1/16 X 1/2 X SK	1	3 3/32	M1	A	158
			M1=SA240 316L.CBI SPEC A-240-2404					
			M3=SA312 TP316L.CBI SPEC A-312-2406					
			M7=SA403 316LWPS.CBI SPEC A-403-242[illegible]					
			* A312 TP316L					

NOTES:
1. ALL WELDS TO BE 316L UNLESS NOTED OTHERWISE.
2. WORK WITH DWG #1. #2. #3. & DWG #35 SHT'S 2 & 3.

RECEIVED JUN 2 0 2003

R10242462

24590-QL-SRA-MTF5-00001-29-32
REV 00 B

RECEIVED JUN 2 0 2003

CERTIFIED AS BUILT
CONTRACT DRAWING
DATE: 4/5/05
SIGNED: [signature]

CBI

N56 - N62 INLETS TO WASH RING
WASH RING
WASTE FEED RECEIPT
VESSEL FRP-VSL-00002D (D)
RICHLAND, WA

CUSTOMER'S NO
BY TSJ CHKD CSF DATE 9/18/02
PVE / D.R. BALCOMB
ENGINEERING ASSIGNED

CONTRACT NO 137202D
DWG 35 REV 2
SHT 01

INDICATES CHANGE FROM PREVIOUS ISSUE

20235010.DGN

4/23/03 4-29-03
Processed/ Data Entry Copied/ OA Scanned Filed
(B) (A) 4/21/03
(C) ed 4-23-03