APPENDIX 4A

Figures and Drawings

This page intentionally left blank.

APPENDIX 4A

ENGINEERING FIGURES

The figures listed below are included in this appendix, and are to be used in conjunction with the text in the DWP Chapter 4.

Title	Figure Number
Simplified Plant Flow Figures	
WTP Simplified Flow Diagram	4A-1
Primary Pretreatment Process Systems	4A-2
Primary Pretreatment Process Systems (Continued)	4A-2A
Primary LAW Vitrification Systems	4A-3
Primary HLW Vitrification Systems	4A-4
Process Flow Figures	
Cesium Resin Addition Process System (CRP)	4A-11
LAW Melter Process System (LMP)	4A-21
LAW Container Finishing Handling System (LFH)	4A-24
HLW Melter Process System (HMP)	4A-27
Typical System Figures	
Typical Tank System – Cesium Ion Exchange Column	4A-38
Typical System – LAW Melter Process System (LMP)	4A-48
Typical Tank System – HLW Melter Feed Process System (HFP)	4A-53
Typical Tank System – Containment Building (Sheet 1)	4A-59
Typical System - Containment Building Typical Design Features Crosswalk (Sheet 2)	4A-59
Simplified General Arrangement Figures	
Simplified General Arrangement Pretreatment – Plan at El. 98’	4A-65
Miscellaneous Figures	
Schematic of an Example IHLW Container and Label	4A-118
Schematic of an Example ILAW Container and Label	4A-119
Typical Arrangement of a Reverse Flow Diverter	4A-120
Basic Reverse Flow Diverter Design	4A-121
Typical Arrangement of a Steam Ejector System	4A-122
Typical Seal Pot Arrangement	4A-123
Typical Breakpot Arrangement	4A-124
Typical Bulge Configuration	4A-127
Typical Primary Containment Sump Conceptual Design	4A-128

Figure 4A-1 WTP Simplified Flow Diagram

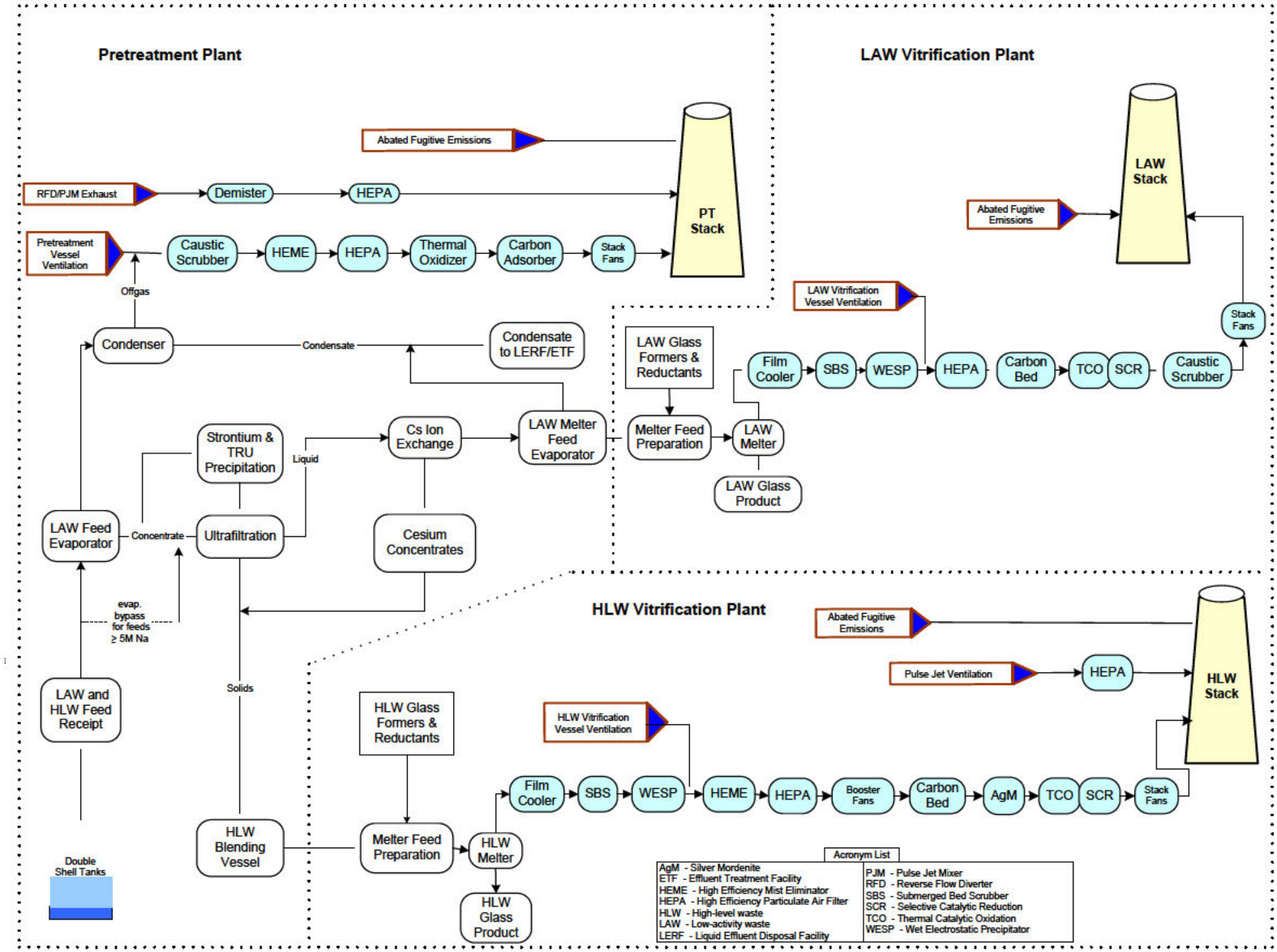

Figure 4A-2 Primary Pretreatment Process Systems

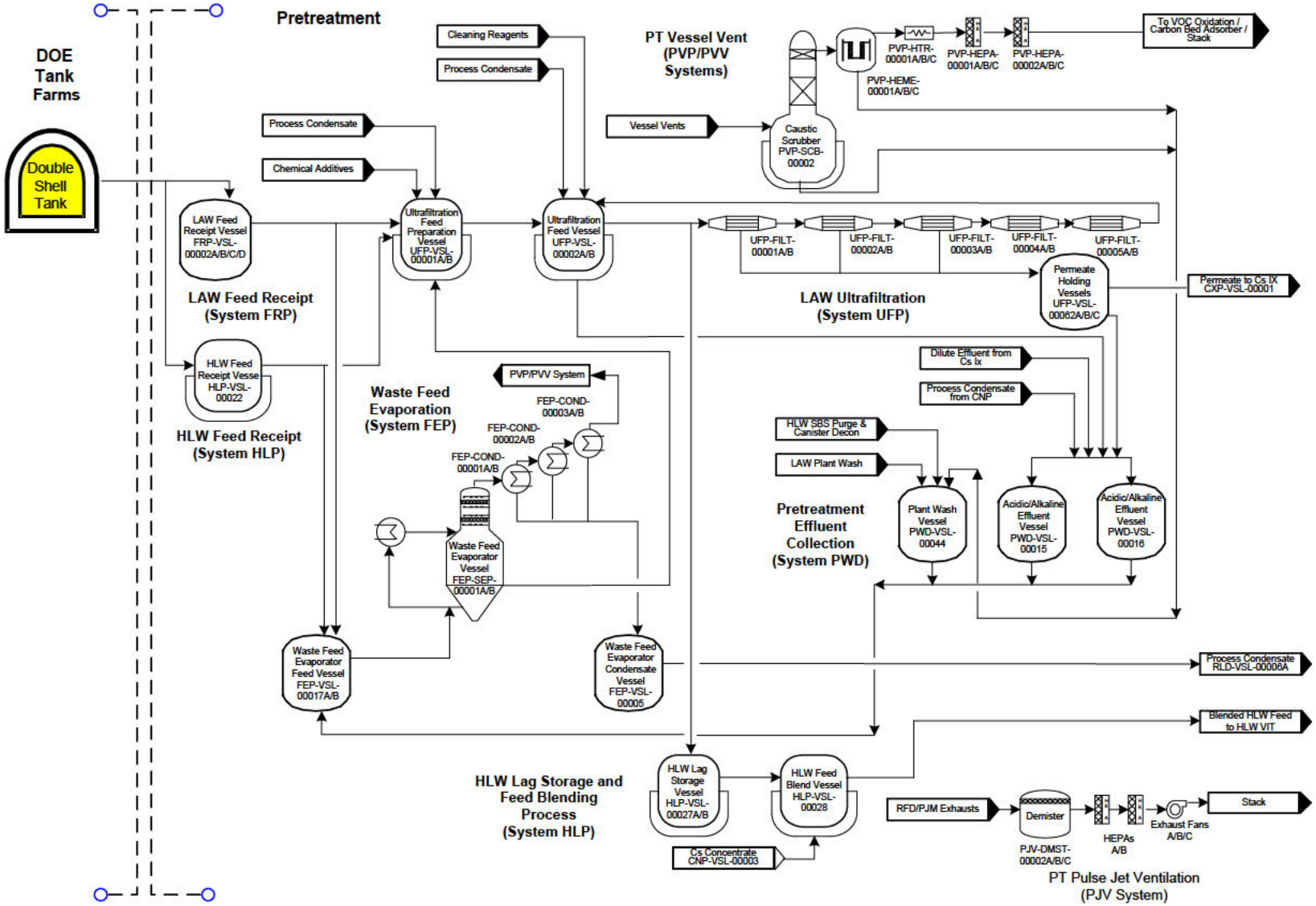

Figure 4A-2A Primary Pretreatment Process Systems (Continued)

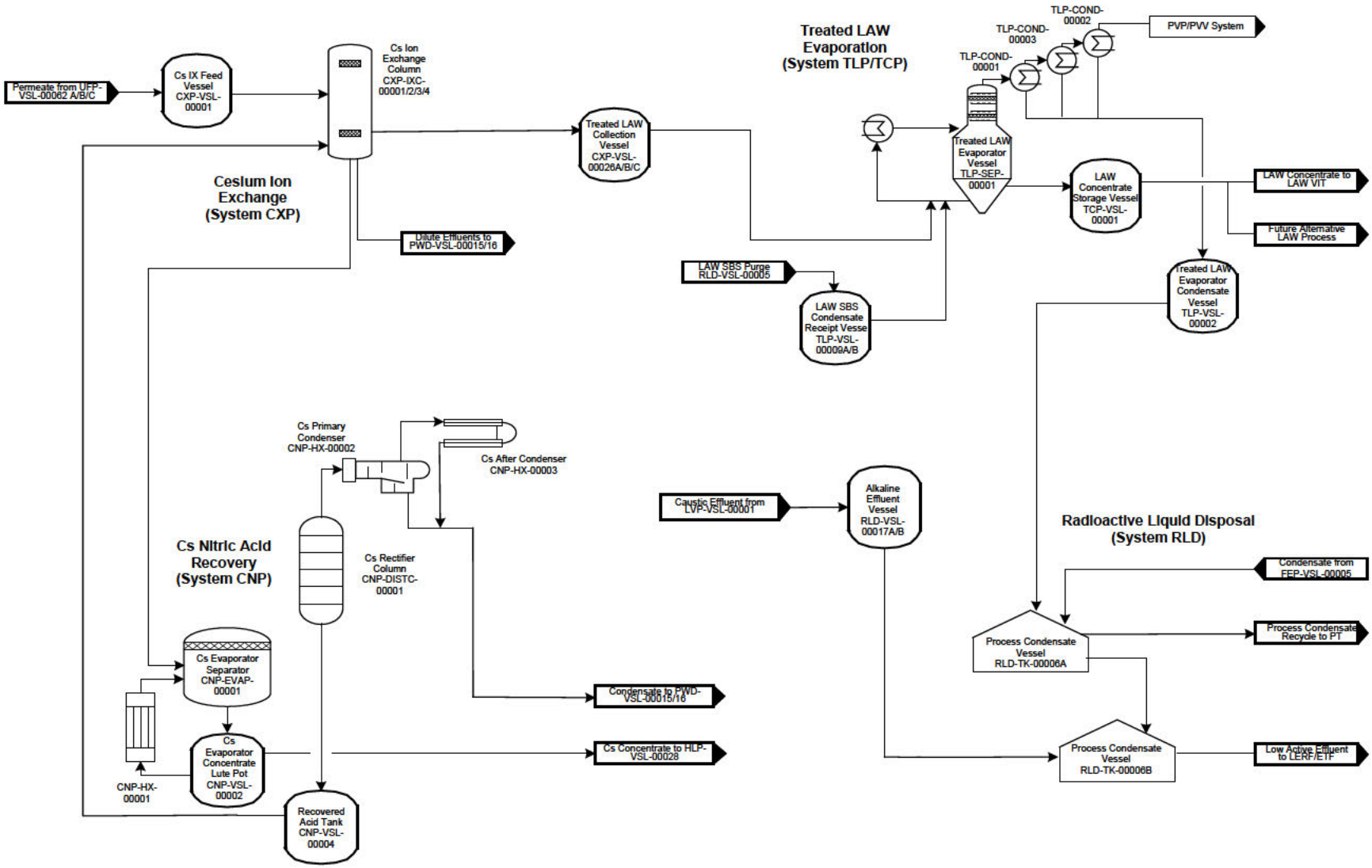

Figure 4A-3 Primary LAW Vitrification Systems

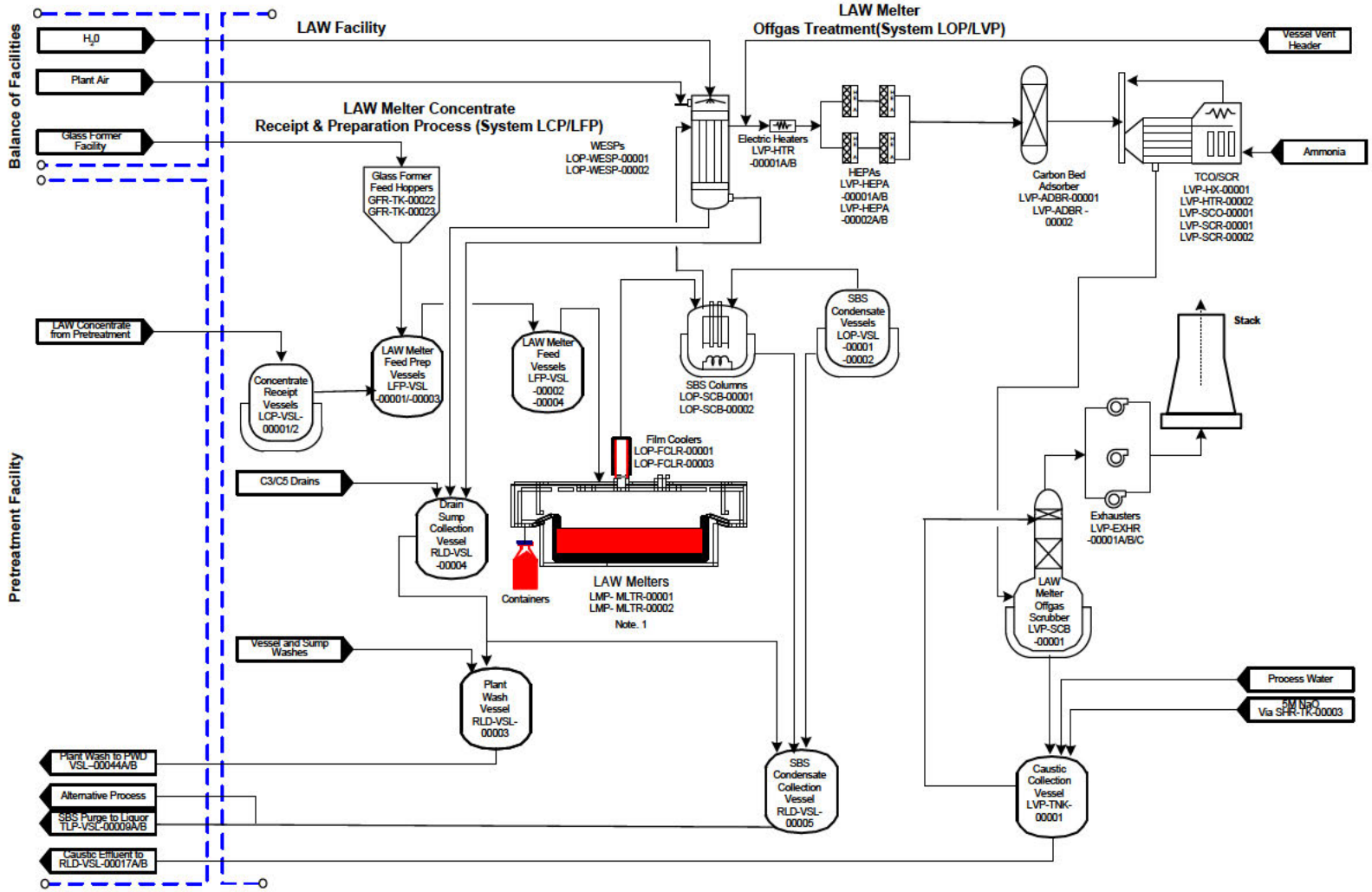

Notes
1. For this diagram one melter system is shown
but assumes a total of two LAW melter systems of identical capacity.

Figure 4A-4 Primary HLW Vitrification Systems

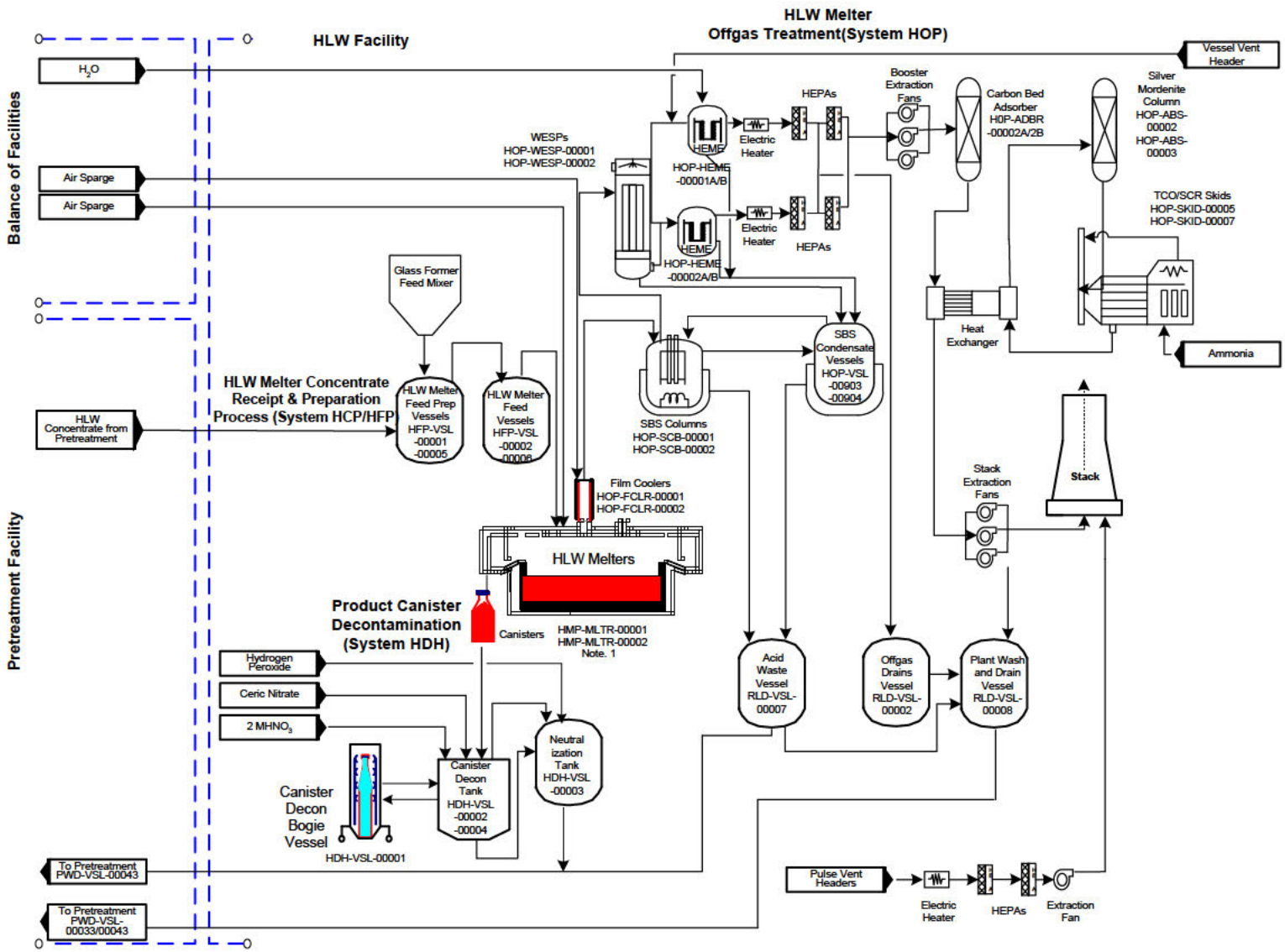

Figure 4A-11 Cesium Resin Addition Process System (CRP)

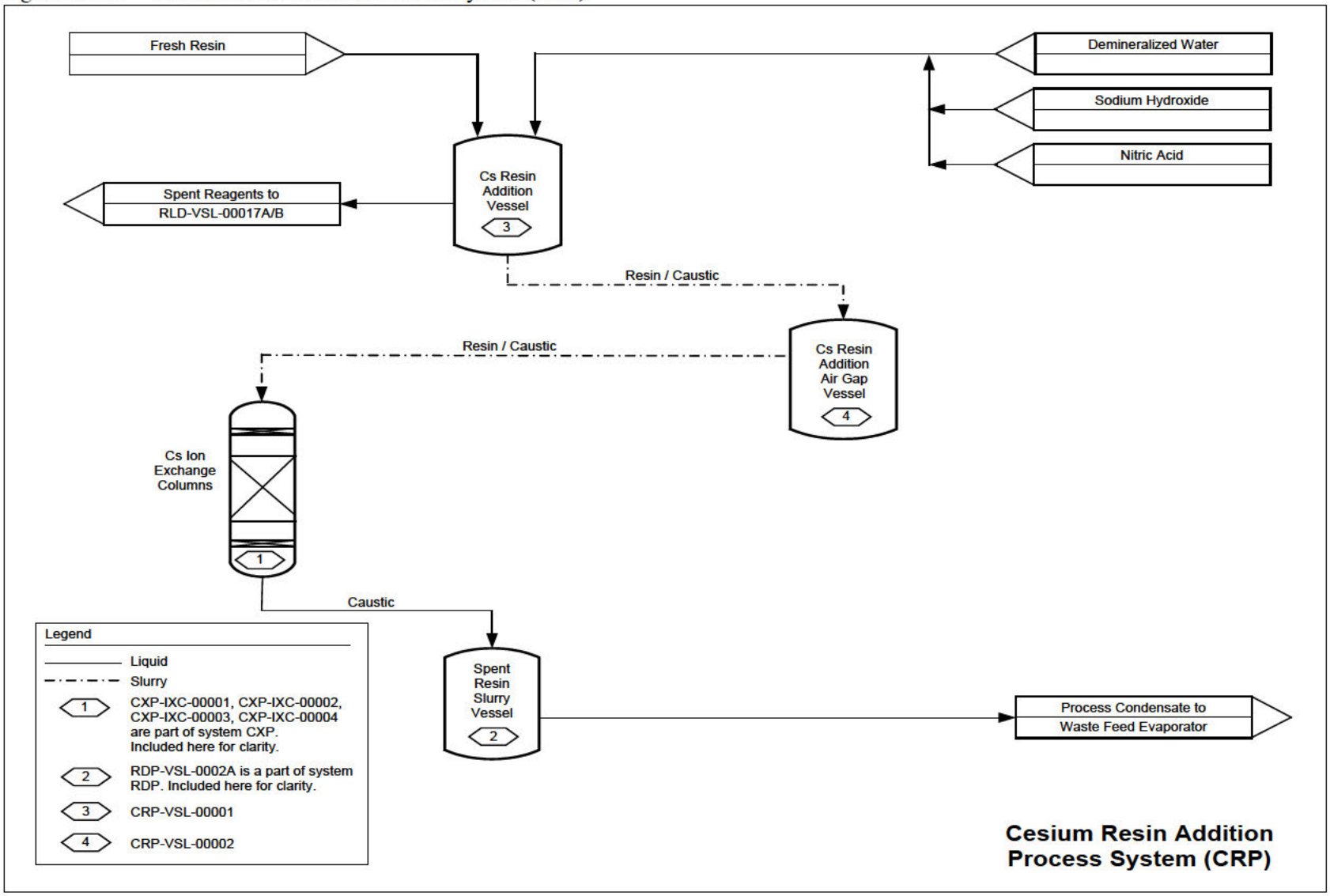

Figure 4A-21 LAW Melter Process System (LMP)

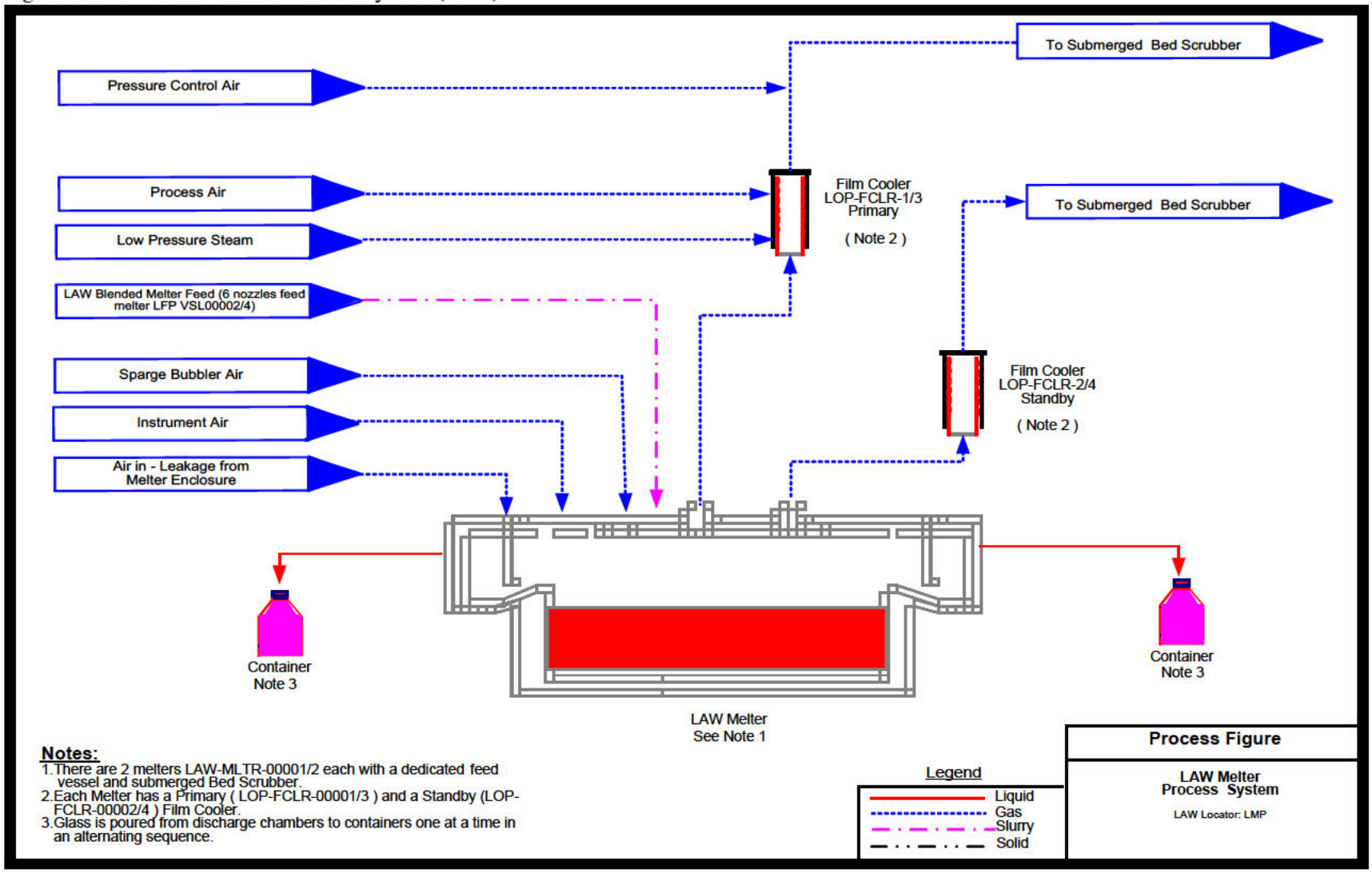

Figure 4A-24 LAW Container Finishing Handling System (LFH)

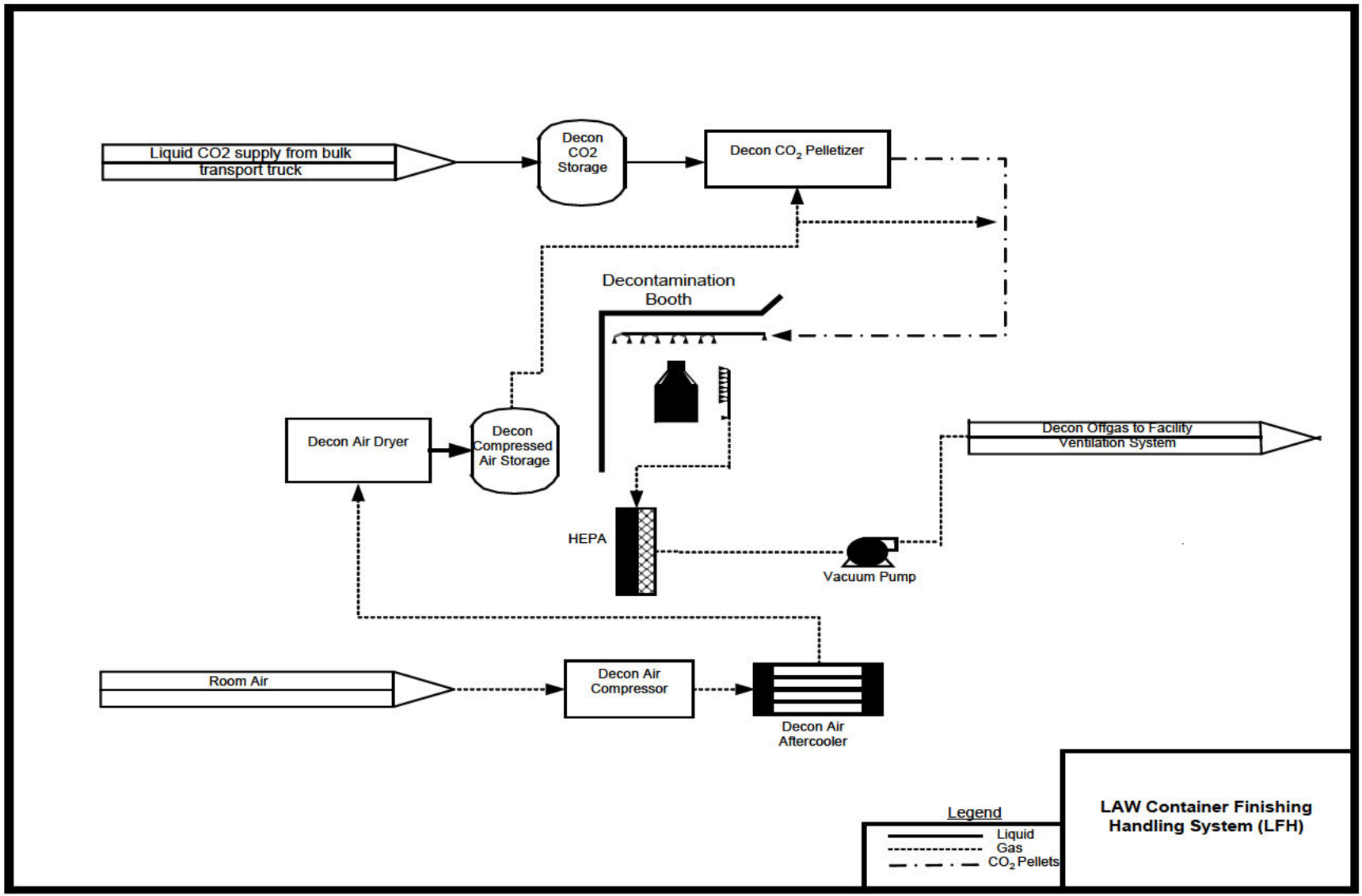

Figure 4A-27 HLW Melter Process System (HMP)

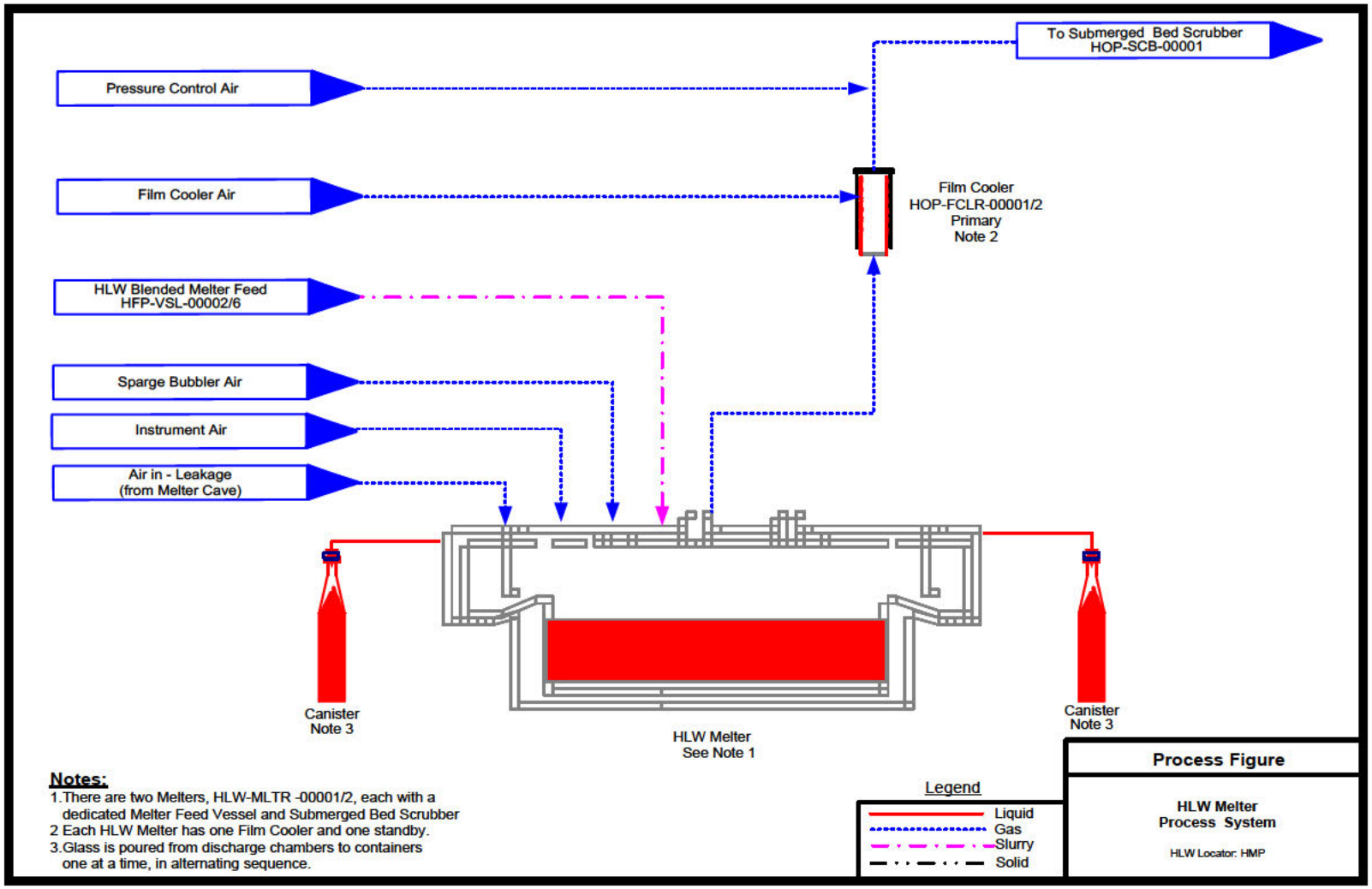

Figure 4A-38 Typical Tank System – Cesium Ion Exchange Column

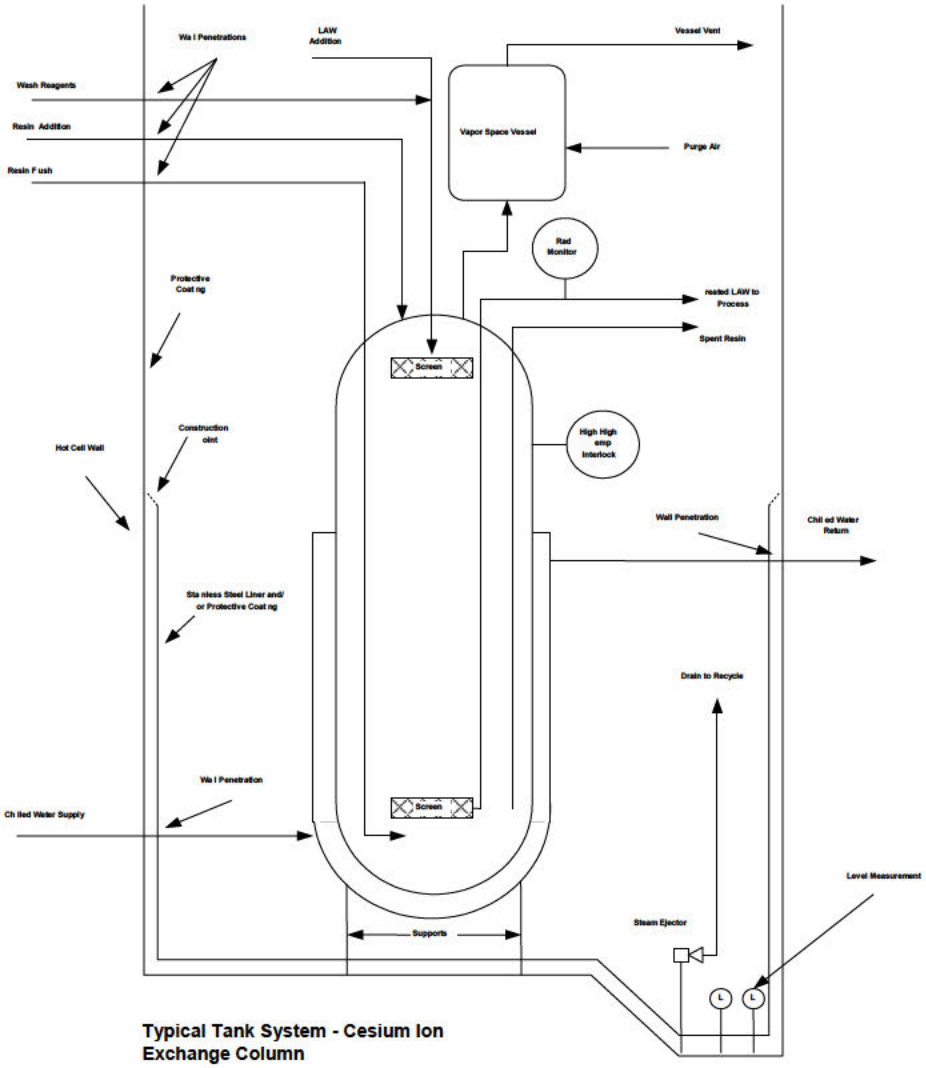

Figure 4A-48 Typical System - LAW Melter Process System (LMP)

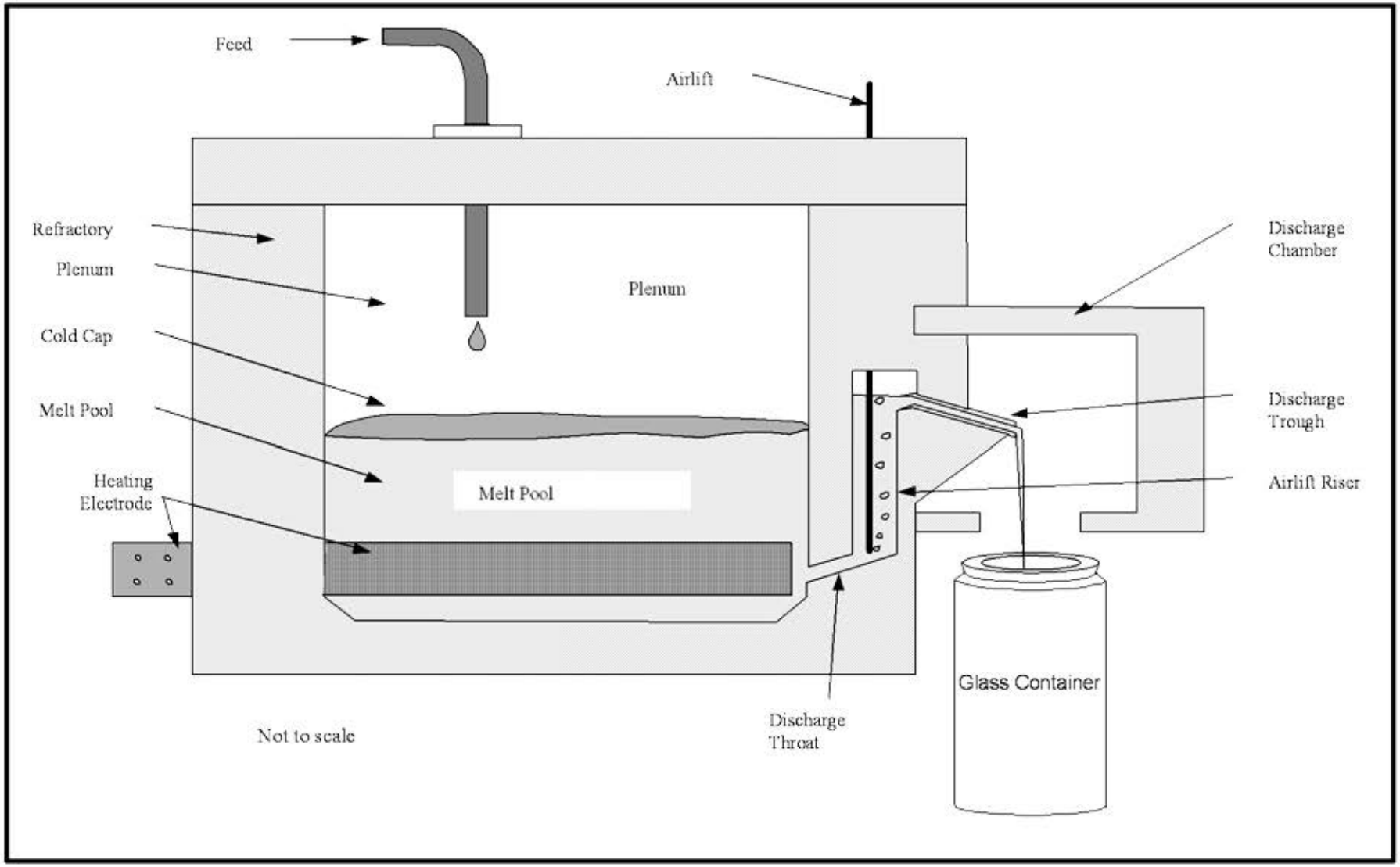

Figure 4A -53 Typical Tank System – HLW Melter Feed Process System (HFP)

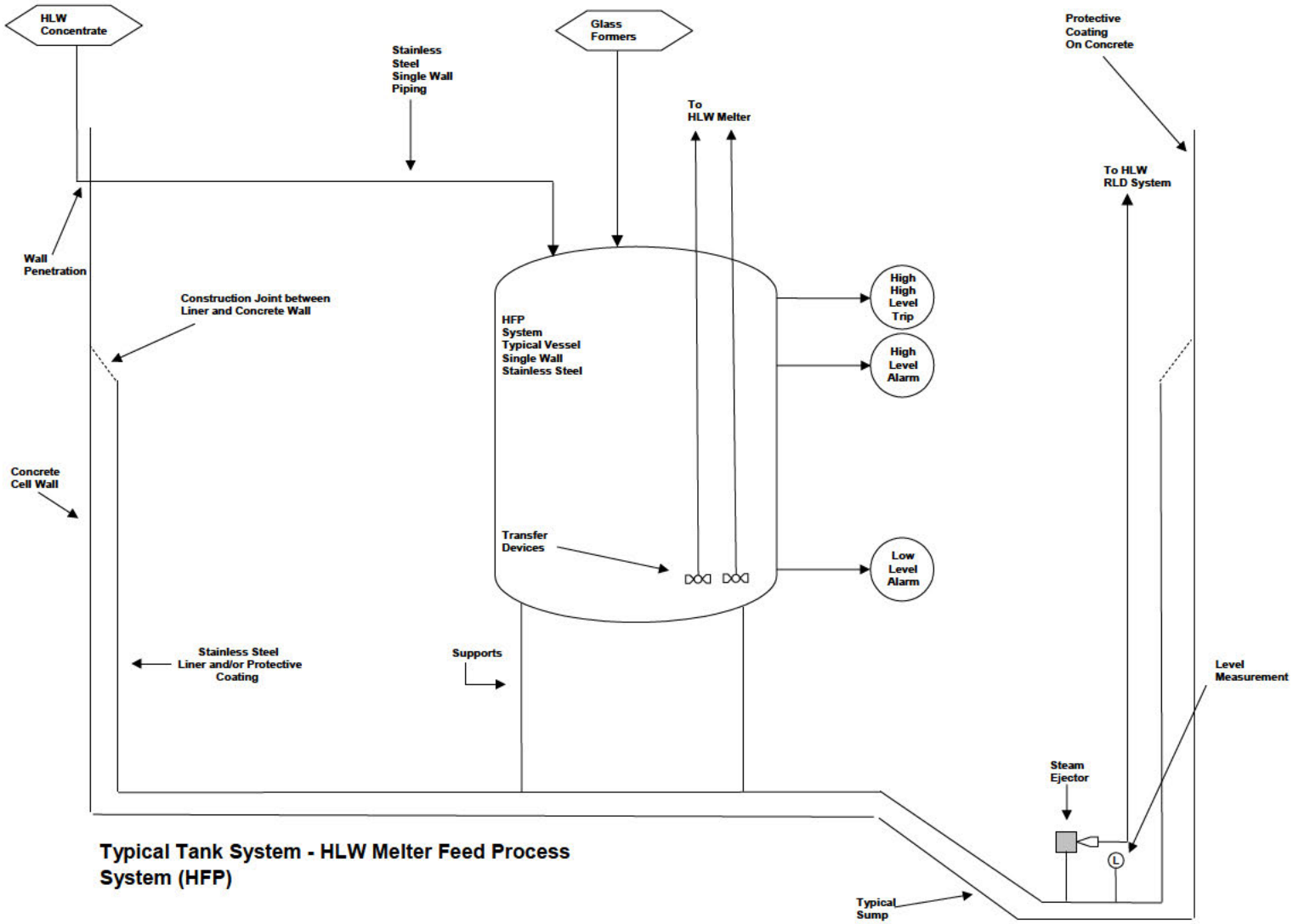

Figure 4A-59 Typical System - Containment Building (Sheet 1)

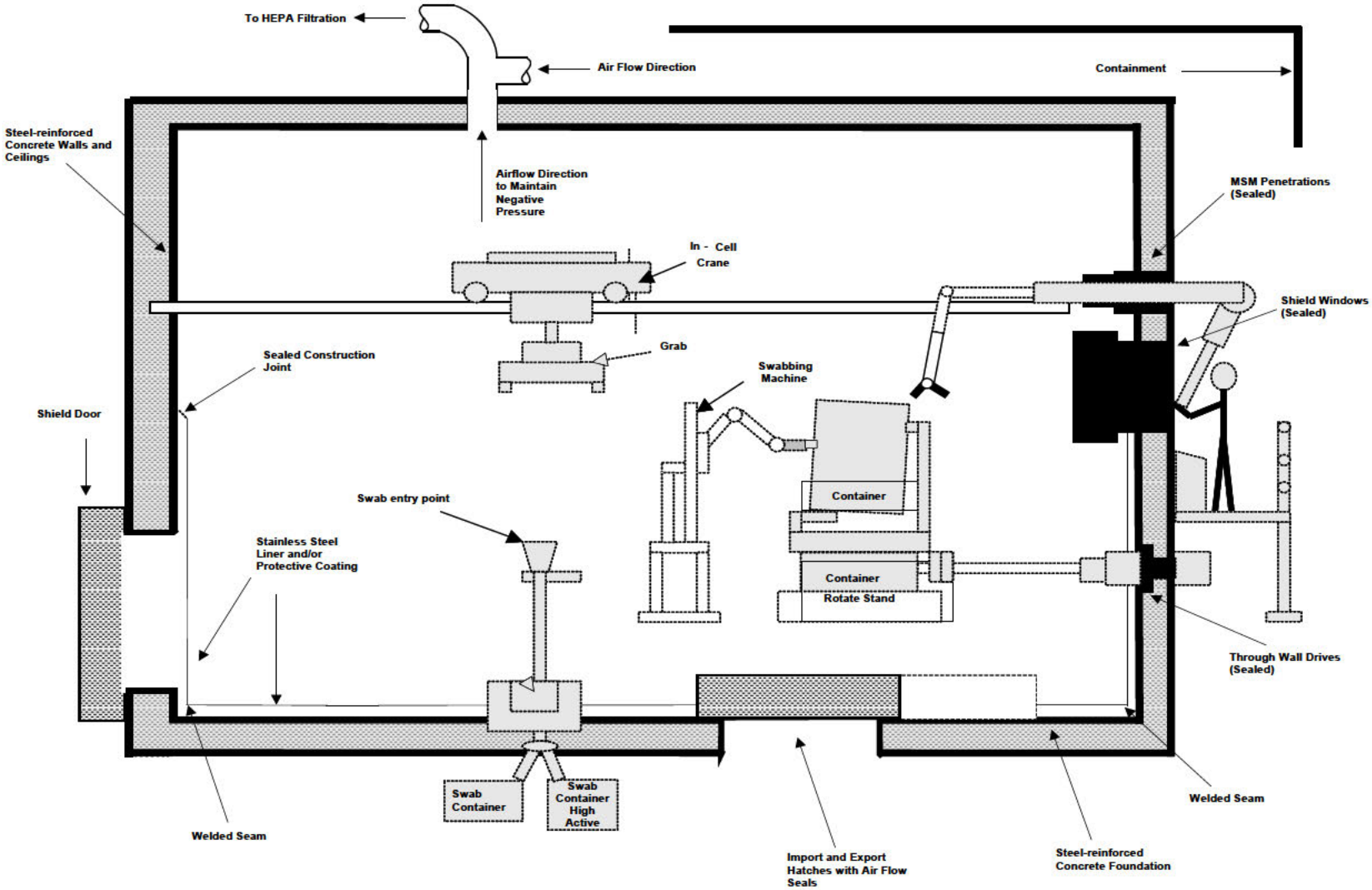

Typical System - Containment Building

Figure 4A-59 Typical System - Containment Building Typical Design Features Crosswalk (Sheet 2)

Containment Building	Negative Cell Air Pressure	Air Flow to HEPA Filters	SS Liner With Welded Seams	Import / Export Hatch - (Controlled Air Gap)	Shield Windows - (Sealed)	Steel Reinforced Concrete Floor/Foundation	Steel Reinforced Concrete Walls & Ceilings	Through Wall MSMs - (Sealed)	In - Cell Bridge Crane / Monorail	Horiz./Vertical Shield Doors - (Controlled Air Gap)	Miscellaneous In-cell Room Equipment
Pretreatment Plant											
Pretreatment Hot Cell Containment Building (P-0123)	X	X	X	X	X	X	X	X	X	X	X
Pretreatment Maintenance Containment Building											
PM0124 Hot Cell Crane Maintenance Mezzanine	X				X	X	X		X		X
P-0121A Spent Resin Dewatering	X	X		X	X	X	X				X
P-0122A Waste Packaging Area	X	X		X	X	X	X				X
P-0123A Remote Decontamination Maintenance Cave	X	X	X	X	X	X	X		X		X
P-0124 C3 Workshop	X	X		X	X	X	X		X		X
P-012C1 C3 Workshop	X	X		X	X	X	X		X		X
P-0125 Cask Lidding Airlock	X	X		X	X	X	X			X	X
P-0125A Cask Lidding Room	X	X		X	X	X	X		X		X
P-0128A MSM Repair Area	X	X		X	X	X	X				X
P-0128 Temporary Storage Room	X				X	X	X				X
Pretreatment Filter Package Maintenance Containment Building (P-0223)	X	X	X			X	X			X	X
Pretreatment Filter Cave Room-Containment Building (P-0335)	X	X	X			X	X			X	X
Pretreatment PJV Secondary HEPA Filter Room Containment Building (P-0431A)	X	X				X	X				

Containment Building	Negative Cell Air Pressure	Air Flow to HEPA Filters	SS Liner With Welded Seams	Import / Export Hatch - (Controlled Air Gap)	Shield Windows - (Sealed)	Steel Reinforced Concrete Floor/Foundation	Steel Reinforced Concrete Walls & Ceilings	Through Wall MSMs - (Sealed)	In - Cell Bridge Crane / Monorail	Horiz./Vertical Shield Doors - (Controlled Air Gap)	Miscellaneous In-cell Room Equipment
LAW Vitrification Plant											
LAW LSM Gallery Containment Building (L-0112)	X	X				X	X			X	X
ILAW Container Finishing Containment Building											
L-0109B Swabbing Cell North Line	X	X		X	X	X	X	X	X	X	X
L-0109C Decontamination Area North Line	X	X		X	X	X	X	X	X	X	X
L-0109D Inert Fill / Welding Area North Line	X	X		X	X	X	X	X	X	X	X
L-0115B Swabbing Cell South Line	X	X		X	X	X	X	X	X	X	X
L-0115C Decontamination Area South Line	X	X		X	X	X	X	X	X	X	X
L-0115D Inert Fill / Welding Area South Line	X	X		X	X	X	X	X	X	X	X
L-0109E Container Monitoring/Export Area - North Line	X	X		X	X	X	X	X	X	X	X
L-0115E Container Monitoring/Export Area - South Line	X	X		X	X	X	X	X	X	X	X
LAW Vit Plant C3 Workshop Containment Building (L-226A)	X	X				X	X		X		X
LAW Consumable Import/Export Containment Building (L-0119B)	X	X				X	X		X		X
LAW Pour Cave Containment Building											
L-B015A Pour Cave (Melter 1)	X	X		X	X	X	X	X	X	X	X
L-B013C Pour Cave (Melter 1)	X	X		X	X	X	X	X	X	X	X
L-B013B Pour Cave (Melter 2)	X	X		X	X	X	X	X	X	X	X
L-B011C Pour Cave (Melter 2)	X	X		X	X	X	X	X	X	X	X
L-B011B (Spare)	X	X		X	X	X	X	X	X	X	X
L-B009B (Spare)	X	X		X	X	X	X	X	X	X	X
ILAW Container Buffer Storage Containment Building											
L-B025C											
L-B025D											

Containment Building	Negative Cell Air Pressure	Air Flow to HEPA Filters	SS Liner With Welded Seams	Import / Export Hatch - (Controlled Air Gap)	Shield Windows - (Sealed)	Steel Reinforced Concrete Floor/Foundation	Steel Reinforced Concrete Walls & Ceilings	Through Wall MSMs - (Sealed)	In - Cell Bridge Crane / Monorail	Horiz./Vertical Shield Doors - (Controlled Air Gap)	Miscellaneous In-cell Room Equipment
HLW Vitrification Plant											
HLW Melter Cave 1 Containment Building:	X	X	X	X	X	X	X	X	X	X	X
H-0117 Melter Cave 1	X	X	X	X	X	X	X	X	X	X	X
H-0116B Melter Cave 1 - C2/C3 Airlock	X	X				X	X			X	
H-0310A Melter Cave 1 Equipment Decon Pit	X	X	X	X	X	X	X	X	X	X	
HLW Melter Cave2 Containment Building:	X	X	X	X	X	X	X	X	X	X	X
H-0106 Melter Cave 2	X	X	X	X	X	X	X	X	X	X	X
H-0105B Melter Cave 2 - C2/C3/ Airlock	X	X				X	X		X	X	
1 H-0304A Melter Cave 2 Equipment Decontamination Area	X	X	X	X	X	X	X	X	X	X	
IHLW Canister Handling Cave Containment Building (H-0136)	X	X	X	X	X	X	X	X	X	X	X
IHLW Canister Swab and Monitoring Cave Containment Building (H-0133)	X	X		X	X	X	X	X	X	X	
C3 Workshop Containment Building:	X	X				X	X				X
C3 Workshop (H-0311A)	X	X				X	X				X
C3 MSM Maintenance Workshop (H-0311B)	X	X				X	X				
HLW Filter Cave Containment Building (H-0104)	X	X		X	X	X	X	X	X	X	X
HLW Waste Handling Area Containment Building:	X	X				X	X				
H-0410B E&I Room	X	X				X	X				
H-0411 Waste Handling Room	X	X				X	X				
HLW Pour Tunnel 1 Containment Building (H-B032)	X	X	X	X		X	X		X		
HLW Pour Tunnel 2 Containment Building (H-B005A)	X	X	X	X		X	X		X		
HLW Drum Swabbing and Monitoring Area Containment Building:	X	X				X	X		X		
H-0126A Crane Maintenance Room	X	X				X	X				
H-0126B Swabbing and Monitoring Room	X	X				X	X				
H-B028 Cask Import/Export Room	X	X				X	X		X		

Figure 4A-65 Simplified General Arrangement Pretreatment - Plan at El. 98

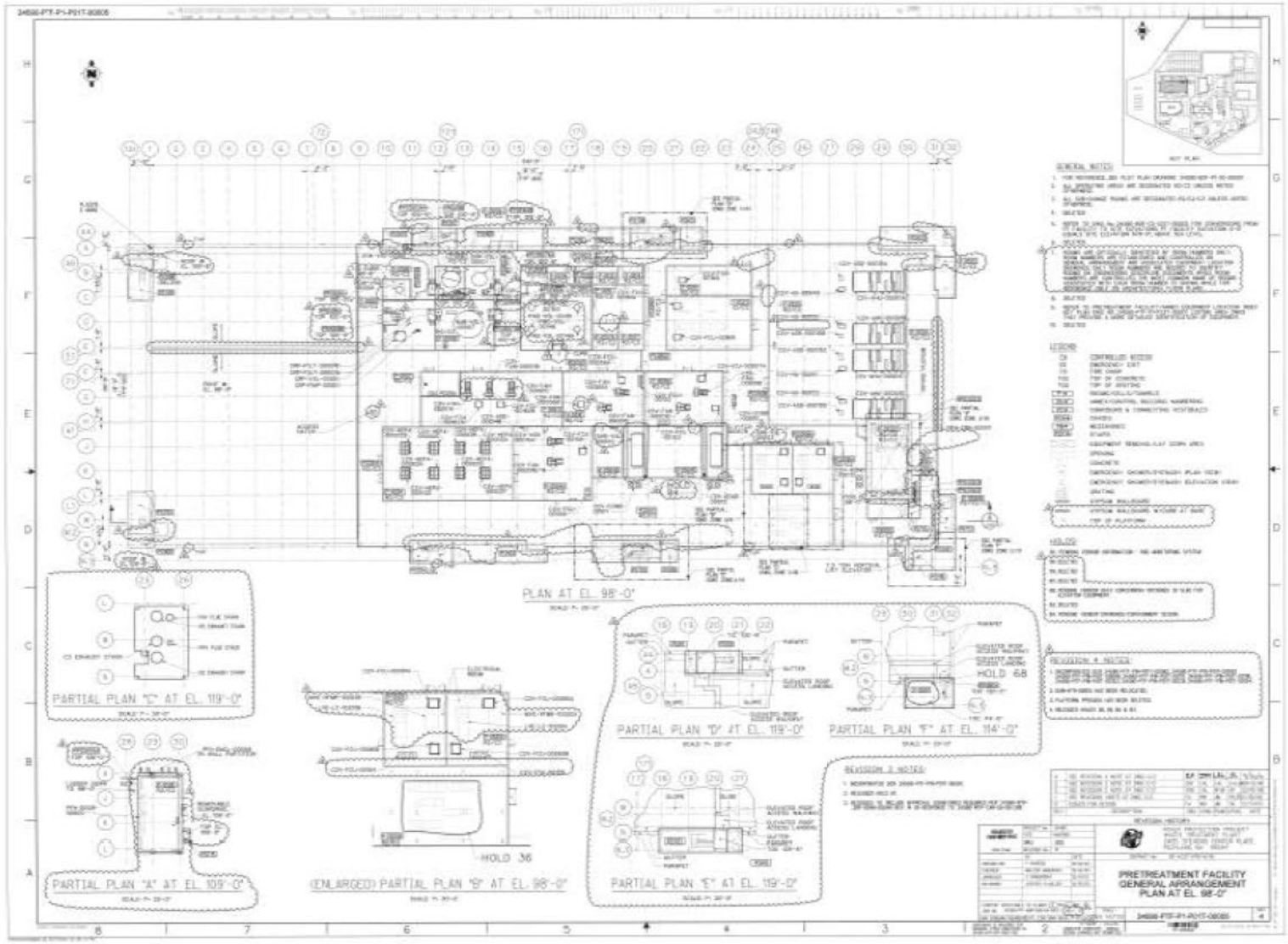

Some information, on this page, may appear to be illegible; however, the information necessary for assuring adequate design is legible

Figure 4A-118 Schematic of an Example IHLW Container and Label

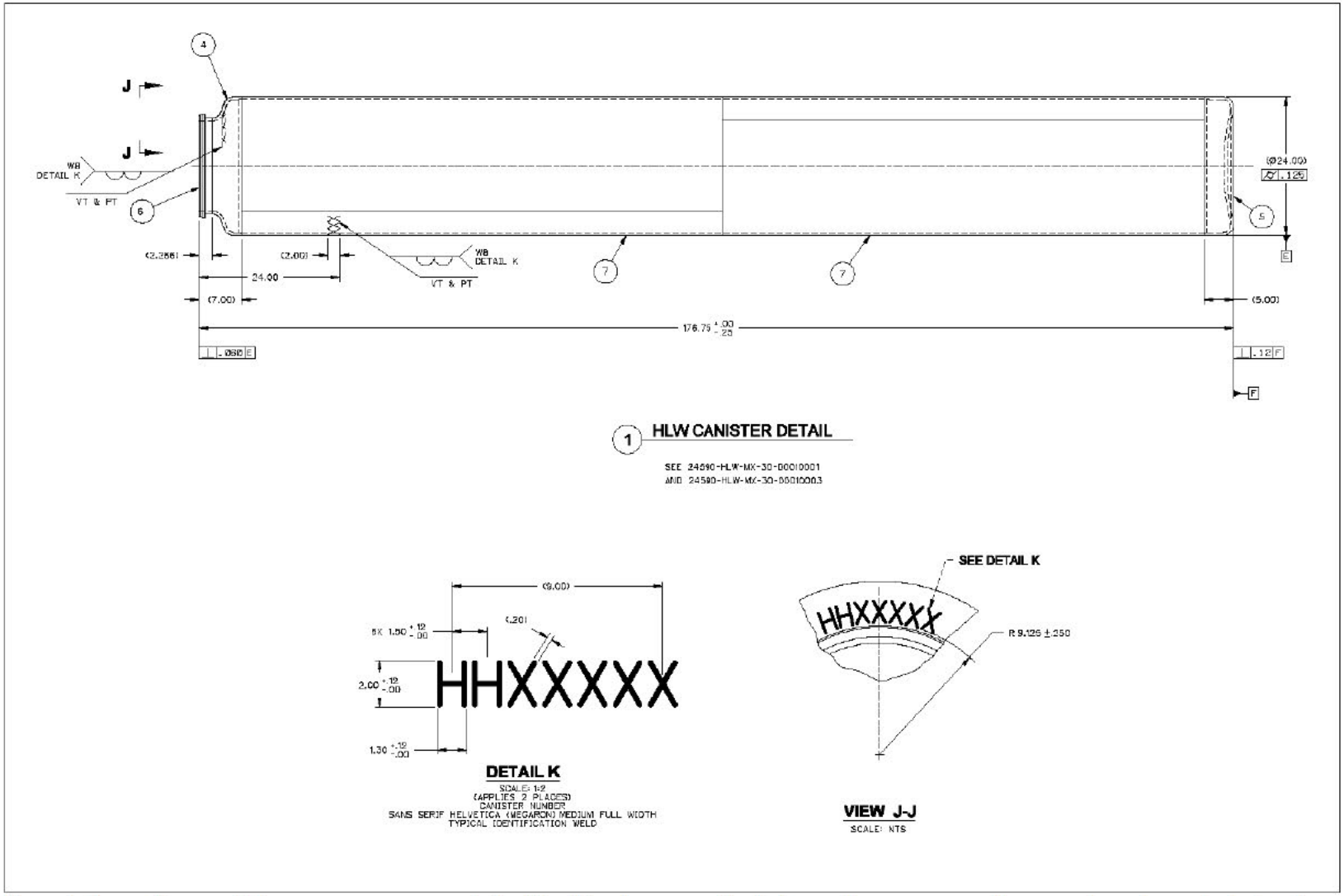

Some information, on this page, may appear to be illegible; however, the information necessary for assuring adequate design is legible

Figure 4A-119 Schematic of an Example ILAW Container and Label

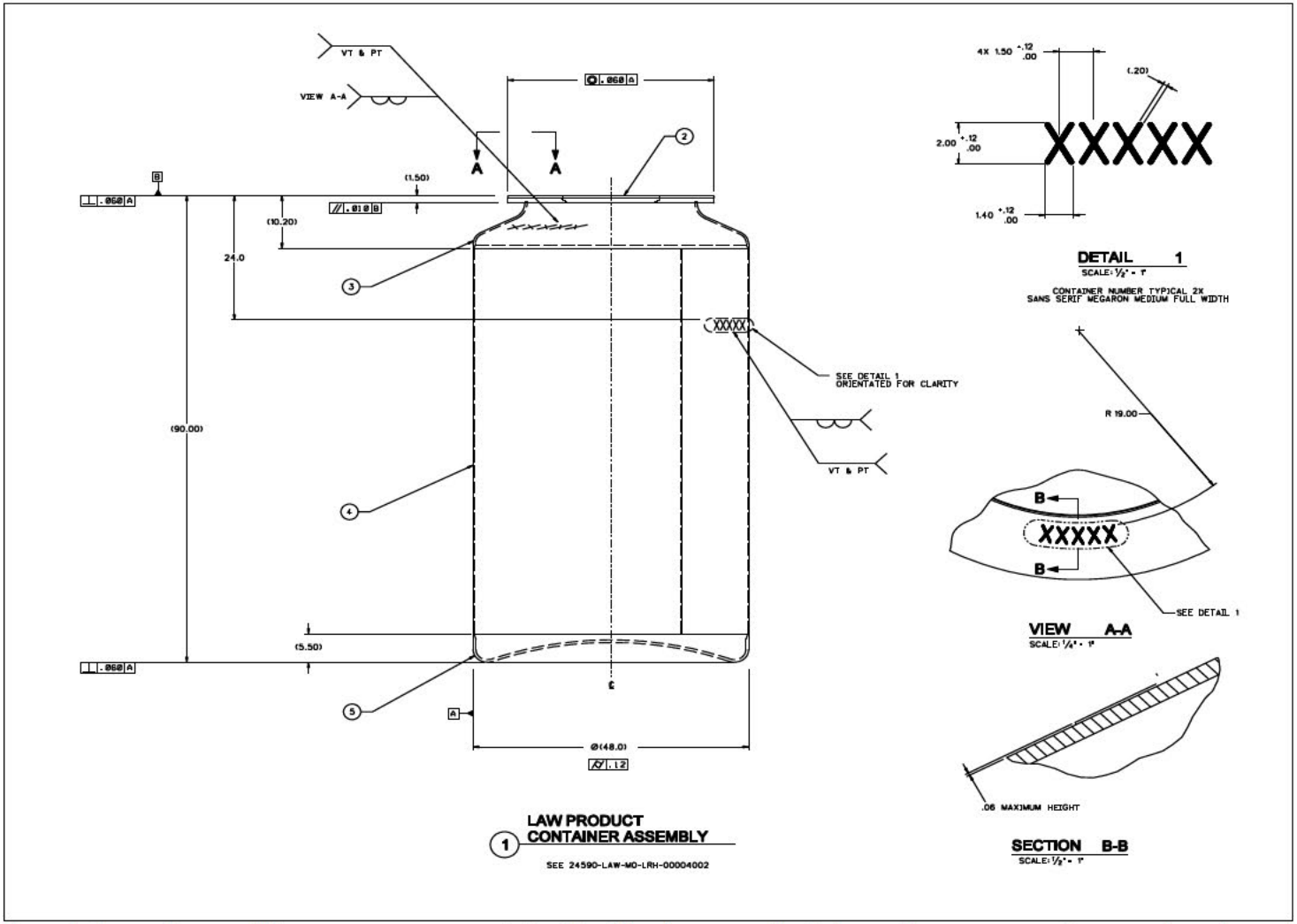

Some information, on this page, may appear to be illegible; however, the information necessary for assuring adequate design is legible

Figure 4A-120 Typical Arrangement of a Reverse Flow Diverter

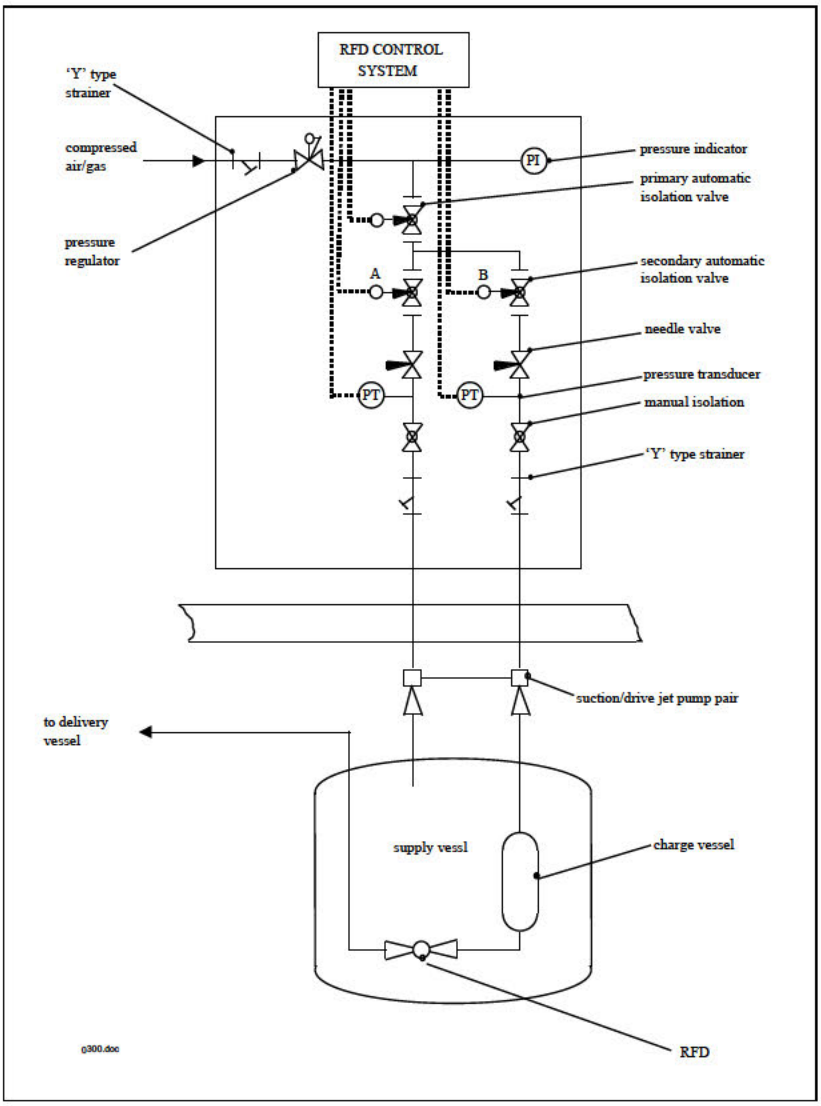

Some information, on this page, may appear to be illegible; however, the information necessary for assuring adequate design is legible

Figure 4A-121 Basic Reverse Flow Diverter Design

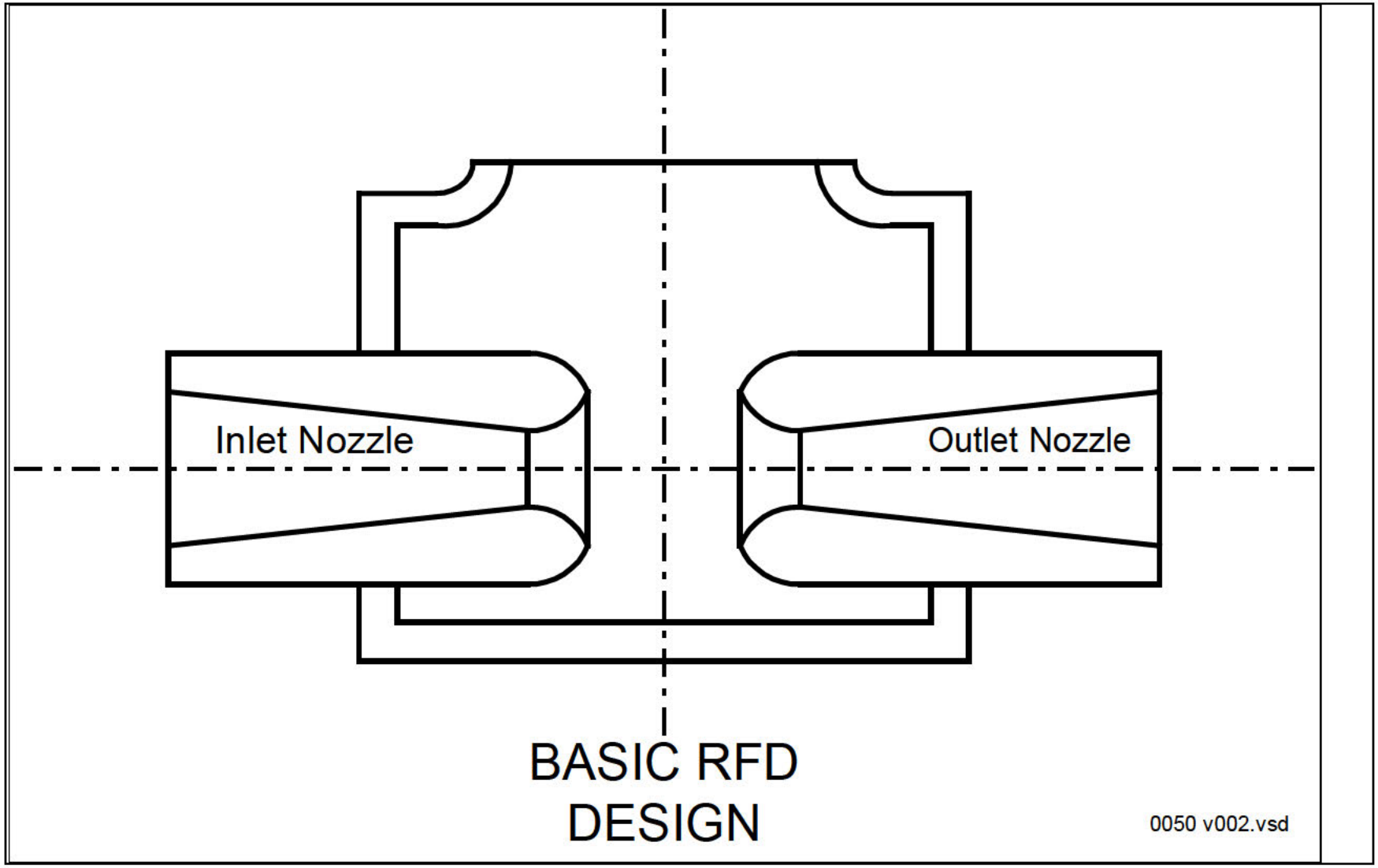

Figure 4A-122 Typical Arrangement of a Steam Ejector System

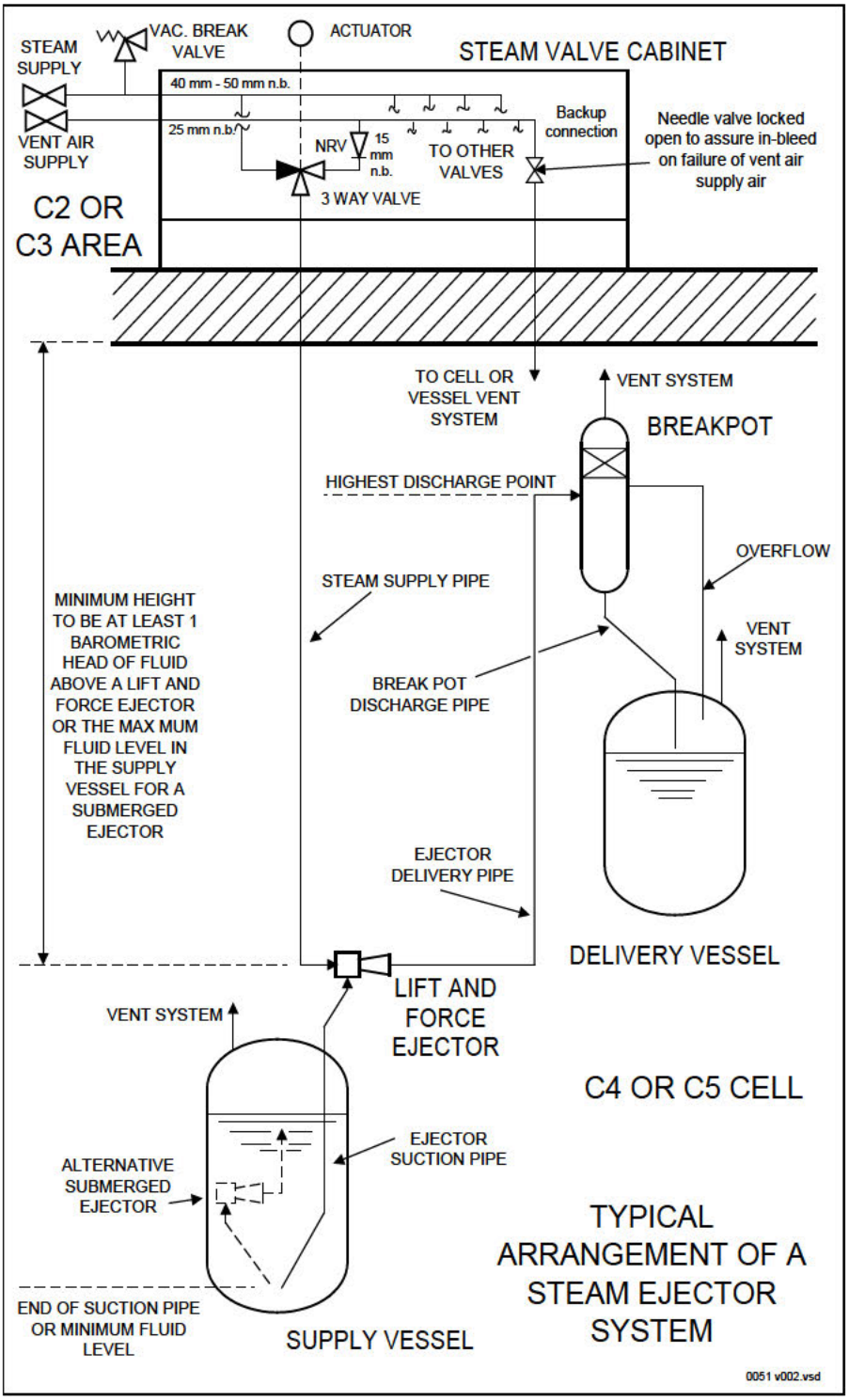

Figure 4A-123 Typical Seal Pot Arrangement

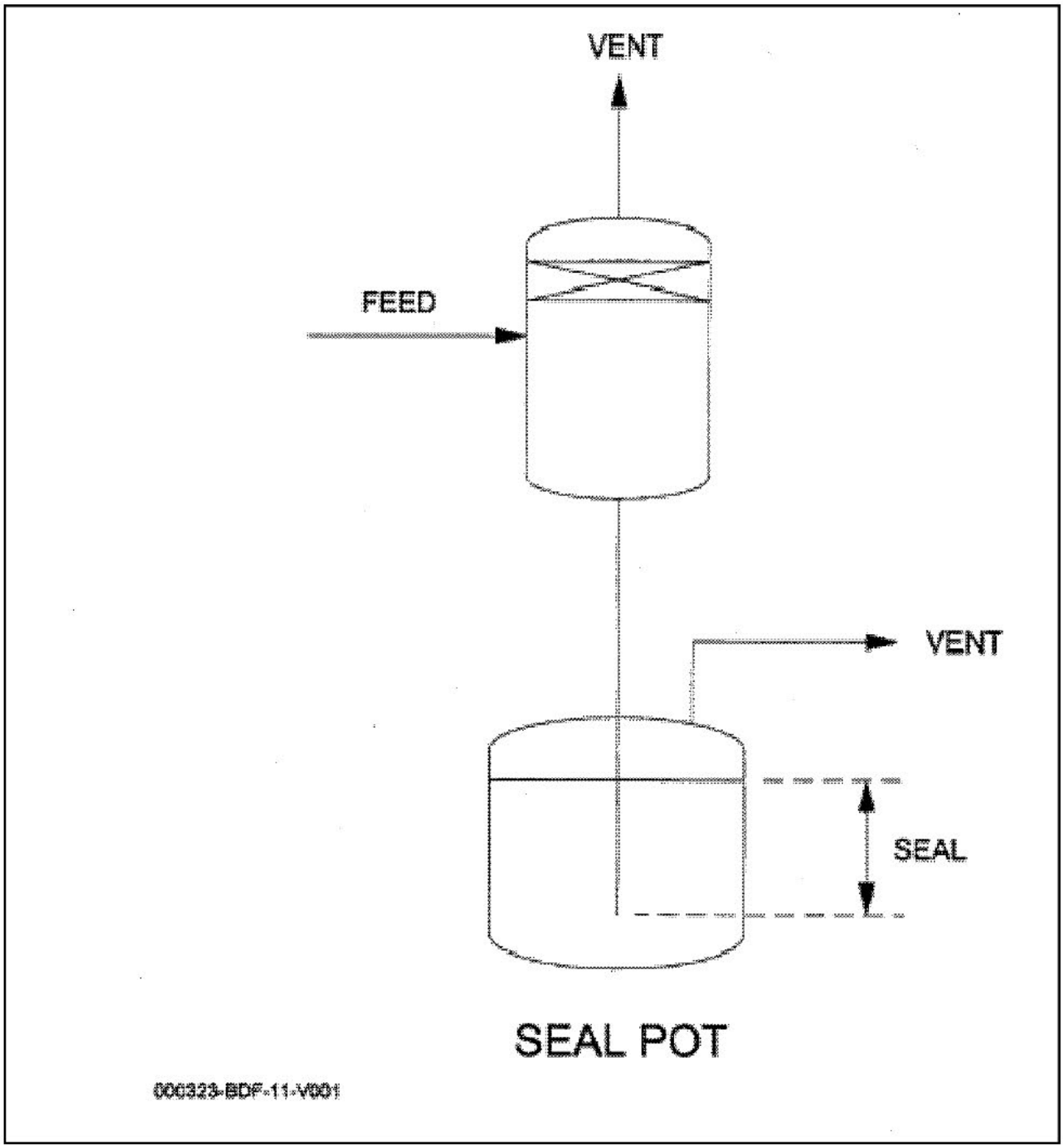

Figure 4A-124 Typical Breakpot Arrangement

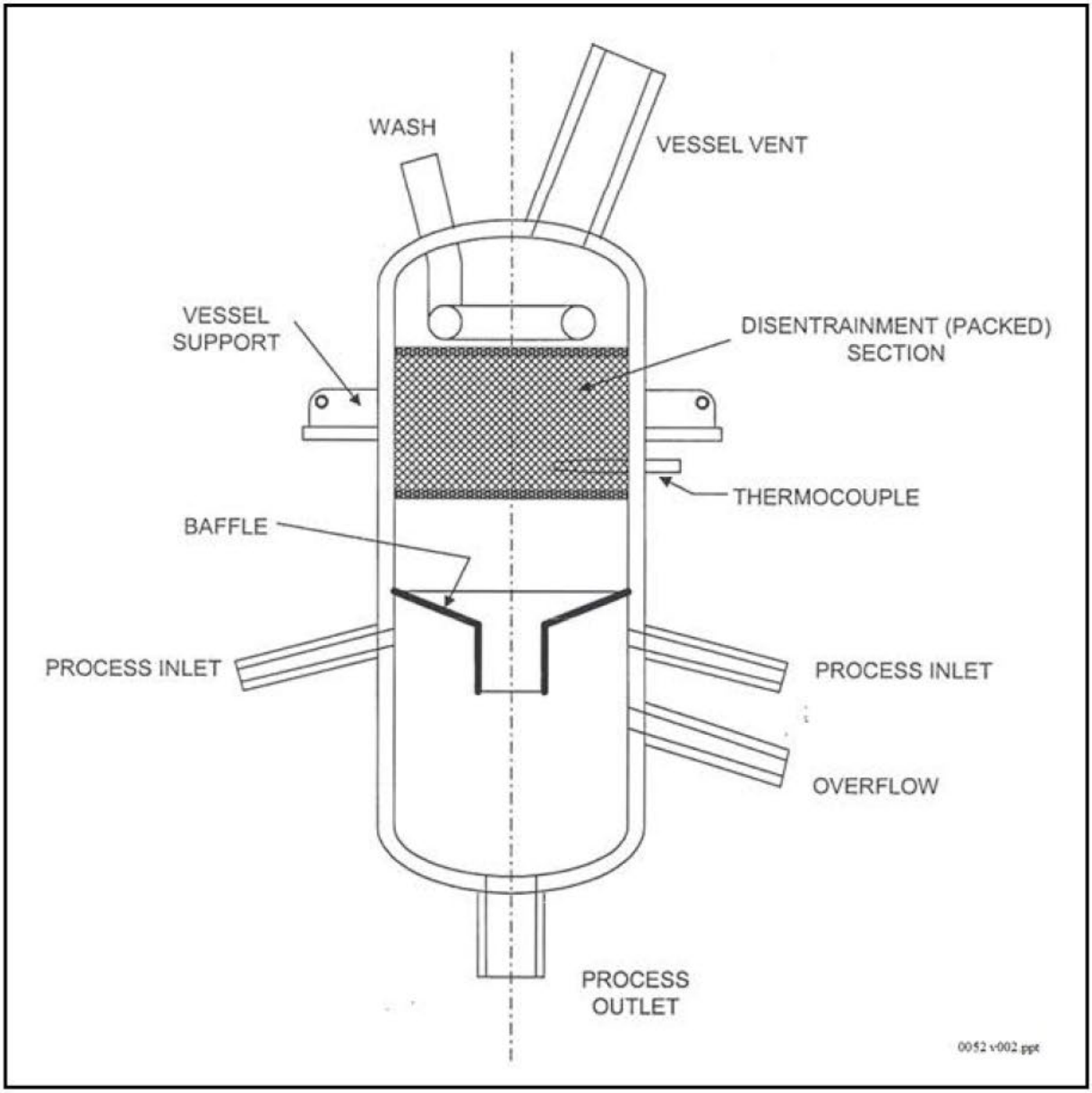

Figure 4A-127 Typical Bulge Configuration

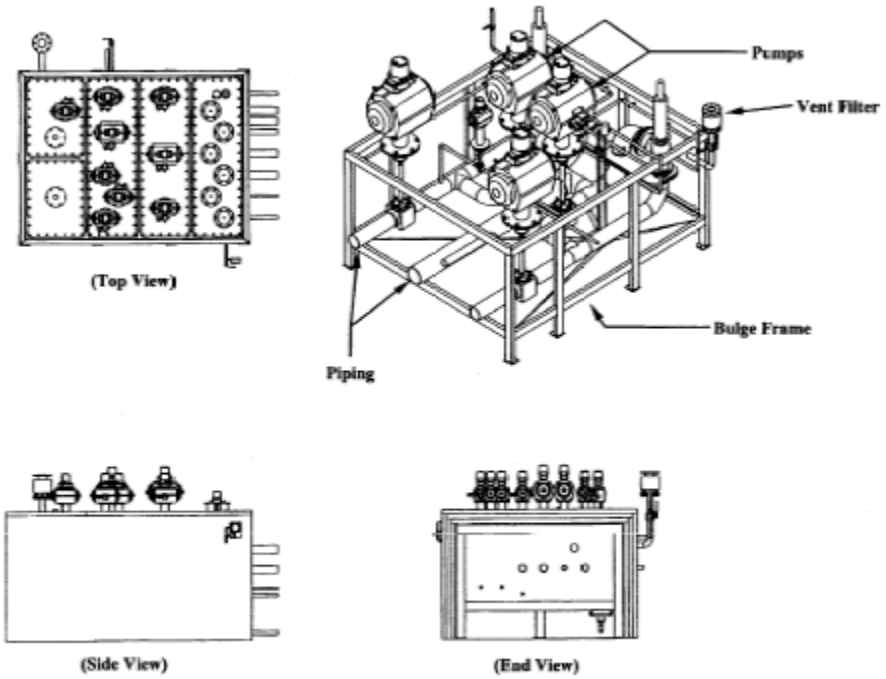

Figure 4A-128- Typical Primary Containment Sump Conceptual Design

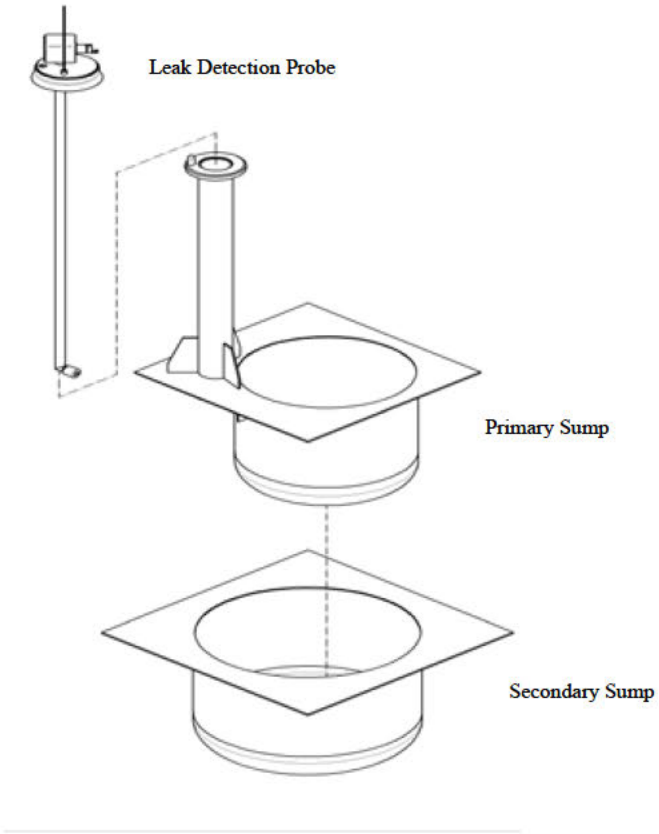

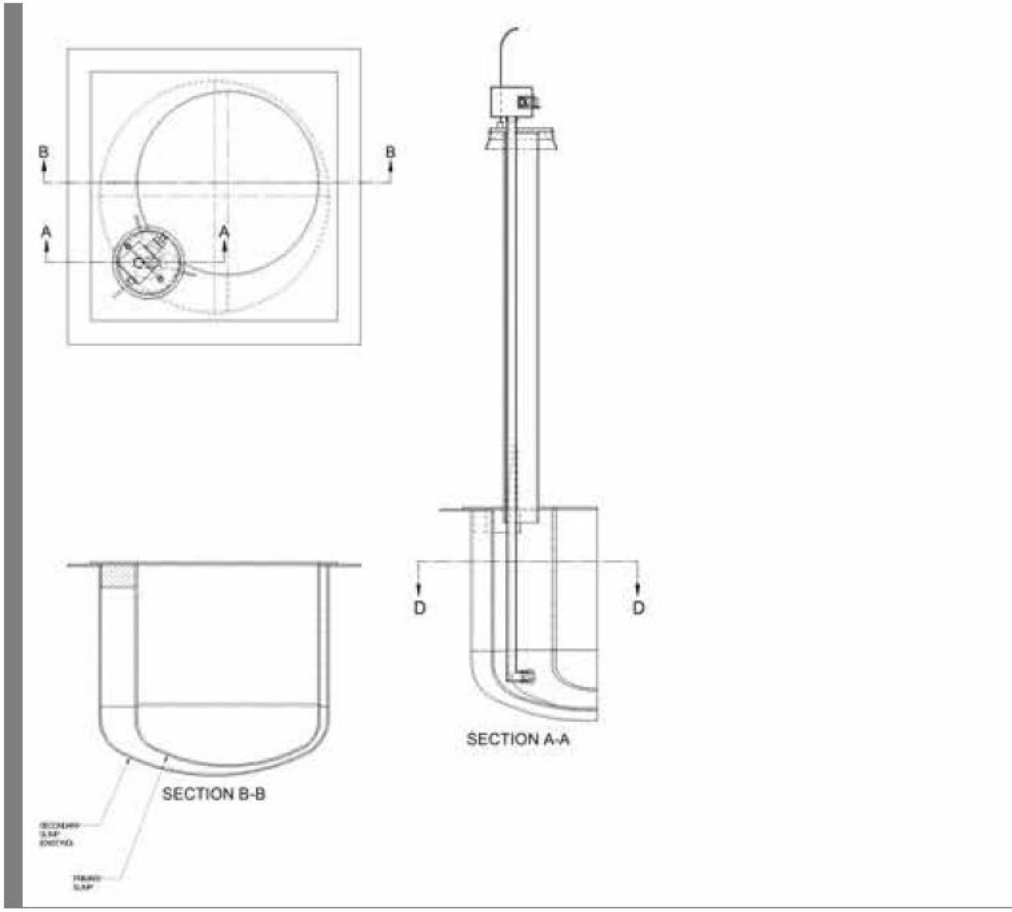

Notes
Primary sump provided with liquid detection probe and ejector for waste removal (not shown for clarity. Leaks into secondary sump are removed by ejector through piping for secondary probe, not shown for clarity)