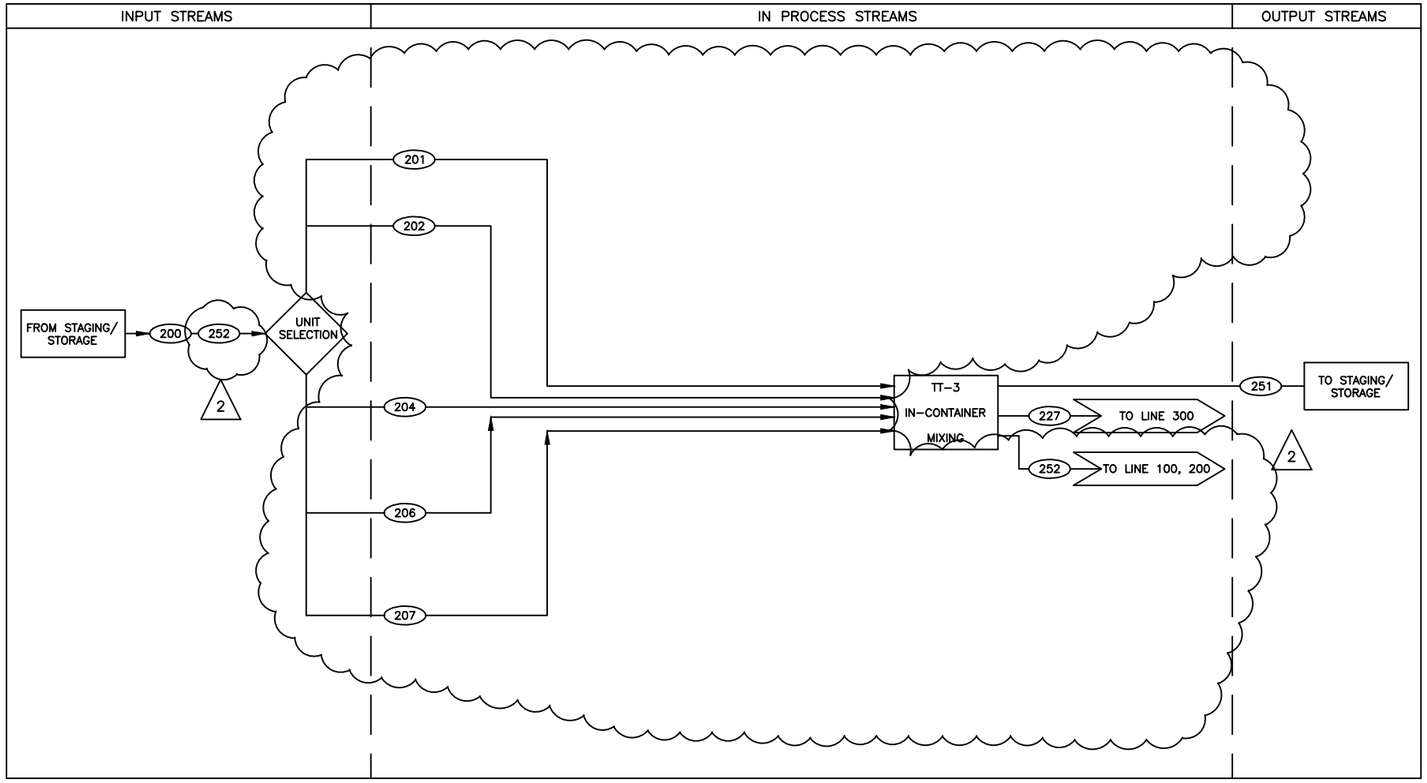

STREAM NO.	STREAM DESCRIPTION	STREAM RESTRICTIONS
	LINE 200 IN-PROCESS STREAMS	
217	RESERVED	

STREAM NO.	STREAM DESCRIPTION	STREAM RESTRICTIONS
	LINE 200 OUTPUT STREAMS	
227	Empty[1] containers requiring cleaning or triple rinse.	Carries the same waste code(s) designated to the input stream.
251	Waste stabilization with cementaceous reagent which complies with LDR requirements either via the treatment technology standard (STABL) or the appropriate concentration treatment standards.	For final and waste codes designations refer to streams 251A through 251D below.
251A	Stabilized Toxic Characteristic Waste.	With LDR treatment certification, this stream exits subtitle C and can be disposed at a LLW disposal facility.
251B	Stabilized Listed Waste.	With LDR treatment certification, this stream can be disposed at a subtitle C mixed waste disposal facility.
251C	Stabilized or neutralized waste contaminated with TSCA-Regulated PCB's.	This stream can be disposed of at a subtitle C mixed waste or approved disposal facility.
251D	Neutralized Toxic Characteristic Waste.	With LDR treatment certification, this stream is no longer hazardous.
252	Wastes that fail LDR treatment certification are retreated.	With LDR treatment certification, this stream exits subtitle C and can be disposed at a LLW disposal facility.

2

STREAM NO.	STREAM DESCRIPTION	STREAM RESTRICTIONS
	LINE 200 INPUT STREAMS	
200	Liquids, solids, sludge that may/may not require chemical treatment prior to stabilization. Mixed wastes can come directly from WSB.	
201[3]	Liquid waste shipped in small containers (<5 gal) that must be consolidated, chemically treated and/or stabilized. If the facility receives several small containers that are chemically compatible, they will be consolidated into a single drum. If the liquid waste is in such a small quantity that consolidation is not required (see stream 201E), it will be chemically treated and stabilized in a container inside the SeaLand enclosure. Stream designations for waste requiring chemical treatment before stabilization are 201A–D.	Same as Line 200
201A	Liquid waste (<5 gal) requiring consolidation, neutralization (NEUTR) before stabilization (STABL).	
201B	Liquid waste (<5 gal) requiring consolidation, chemical oxidation (CHOXD) before stabilization (STABL).	
201C	Liquid waste (<5 gal) requiring consolidation, chemical reduction (CHRED) before stabilization (STABL).	
201D	Liquid waste (<5 gal) requiring consolidation, deactivation (DEACT) before stabilization (STABL).	
201E	Liquid waste (<5 gal) requiring consolidation, treatment and/or stabilization in a small container inside the SeaLand enclosure.	
202[3]	Bulk liquid waste (>5 gal) requiring chemical treatment or neutralization (NEUTR, CHOXD, CHRED, DEACT) before stabilization (STABL).	No High-Toc waste. No air/water reactive waste.
202A	Bulk liquid waste requiring neutralization (NEUTR) before stabilization (STABL).	Same as Line 202.
202B	Bulk liquid waste requiring chemical oxidation (CHOXD) before stabilization (STABL).	Same as Line 202.
202C	Bulk liquid waste requiring chemical reduction (CHRED) before stabilization (STABL).	Same as Line 202.
202D	Bulk liquid waste requiring deactivation (DEACT) before stabilization (STABL).	Same as Line 202.
204[3]	Bulk liquid waste (>5 gal) requiring neutralization and/or stabilization.	No High-TOC waste. No air/water reactive waste. No waste with >10% VOC.
206[3]	Solid wastes contaminated with organics or TSCA regulated PCB's.	No High-TOC waste. No air/water reactive waste. No waste with >10% VOC.
207[3]	Sludges, solids, TSCA-regulated PCB waste coming directly from WSB.	Wastes not meeting the definition of debris (less than 60mm) [2]
208-210	RESERVED	

NOTES:
1 – "Empty" as defined by WAC 173-303-160
2 – "Debris" as defined by WAC 173-303-040
3 – Wastes can be treated directly from WSB.

2

REV	DATE	REV. BY	CHECKED / DATE	QC APPROVED / DATE	DESCRIPTION
2	04/23/14	SN			PERMIT MODIFICATION REQUEST 134.
1	10/5/00	JA			REVISED PER DCA 31001-DCA-023
0	2/16/98	JM			ISSUE FOR TSCA/RCRA PERMIT APPLICATION

REVISION

PermaFix® environmental services
A Nuclear Services and Waste Management Company

DATE	11/21/98
DRAWN	MKB
CHECKED	
DFTG APVD	
ENGR	DAS
APVD	
OTHER	
QA	
APPVD FOR IMPLEMENTATION BY	
FOR	DATE

MIXED WASTE FACILITY STABILIZATION BUILDING

FUNCTIONAL FLOW DESCRIPTION–LINE 200 LIQUIDS/SLUDGE

SCALE: NONE | SH 4 OF 7

31001-P-001-04 | REV 2