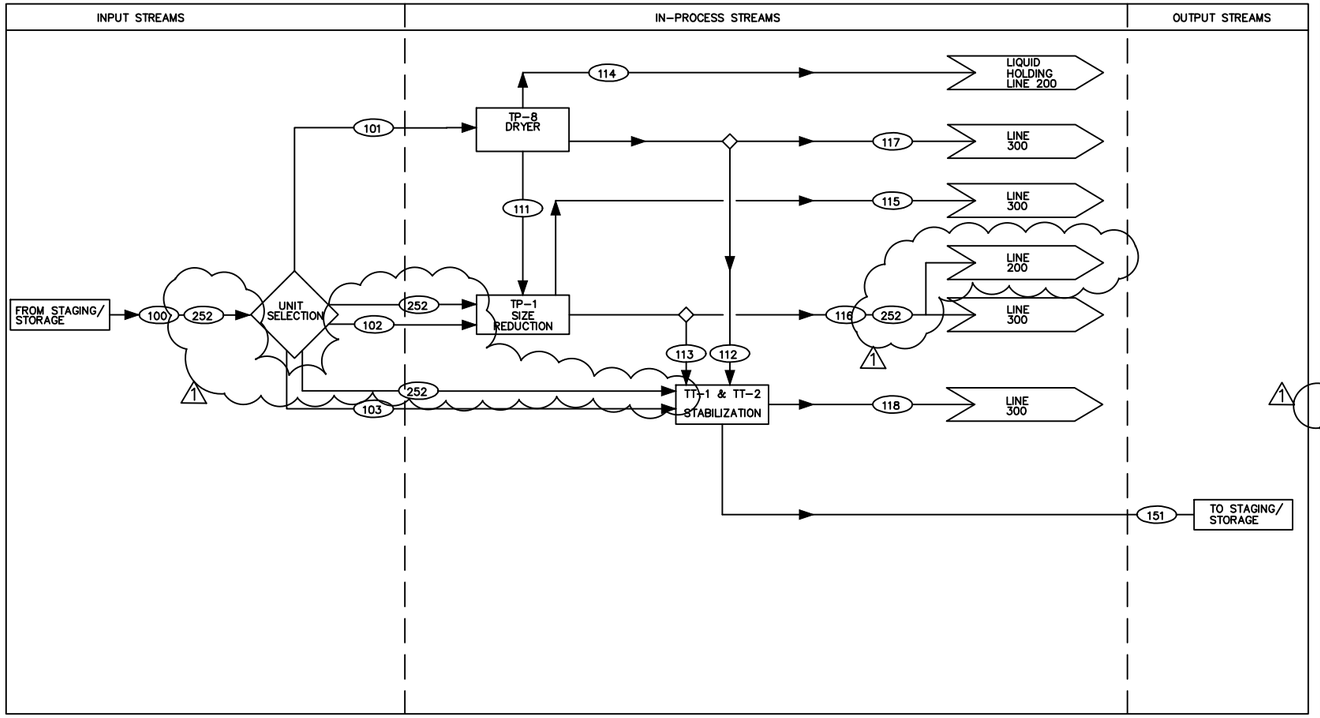

STREAM NO.	STREAM DESCRIPTION	STREAM RESTRICTIONS
	LINE 100 INPUT STREAMS	
100	Waste streams requiring stabilization.	No ignitable (D001), corrosive (D002), or reactive (D003) waste.
101	Waste streams containing visible moisture that must be removed prior to size reduction or stabilization. These wastes are sent to a dryer system for pre-treatment.	Same as Line 100. No TSCA-regulated PCB'S or waste designated WPCB as defined by WAC 173-303-9904
102	Waste streams requiring pre-treatment by size reduction ?a" prior to stabilization.	Same as Line 100.
103	Waste streams that can be sent directly to the stabilization systems.	Same as Line 100.
104-110	RESERVED	
252	Wastes that fail LDR treatment certification will be retreated.	Same as Line 100.
	LINE 100 IN-PROCESS STREAMS	
111	Dried waste requiring pre-treatment by size reducer to ?a" prior to stabilization.	Same as Line 100.
112	Dried waste that meets the size requirements and other acceptance requirements for the stabilization systems. Furthermore, the waste properties are such that it can be treated by a cementaceous reagent formulation.	Same as Line 100.
113	Dried and size reduced waste that meets the size requirements and other acceptance requirements for the stabilization systems. Furthermore, the waste properties are such that it can be treated by a cementaceous reagent formulation.	Same as Line 100.
113A	Dried and size reduced waste that meets the size requirements and other acceptance requirements for the stabilization systems. Furthermore, the waste properties are such that it can be treated by a cementaceous reagent formulation. Process amount requires only low capacity solids mixing.	Same as Line 100.
113b	Dried and size reduced waste that meets the size requirements and other acceptance requirements for the stabilization systems. Furthermore, the waste properties are such that it can be treated by a cementraceous reagent formulation. Process amount requires high capacity solids mixing.	Same as Line 100.
114	Condensate produced from drying the incoming waste. The stream will include waste water that will have minimal dissolved solids content. Any volatile organic material contained in the incoming waste stream that may have vaporized during the drying process will be condensed in the condenser and contained in this waste stream.	Same as Line 100.
115*	Empty[1] waste containers generated after the waste is dumped into the size reduction system.	Same as Line 100.
116	Dried and size reduced waste that meets the acceptance requirements for the stabilization systems. Furthermore, the waste properties are such that it must be treated by a polymer reagent formulation	Same as Line 100.
117	Dried waste that meets the size requirements and other acceptance requirements for the stabilization systems. Furthermore, the waste properties are such that it can be treated by a polymer reagent formulation.	Same as Line 100.
118*	Empty[1] waste containers generated after the waste is dumped into the mixing system.	Same as Line 100.
119-150	RESERVED	Same as Line 100.

* 1 - "Empty" as defined by WAC 173-303-160

	LINE 100 OUTPUT STREAMS	
151	Waste stabilized with cementaceous reagent which complies with LDR requirements either via the treatment technology standard (STABL) or the appropriate concentration treatment standards.	For final disposition and waste codes designations refer to streams 151 A and B below
151A	Stabilized Toxic Characteristic waste.	With an LDR treatment certification, this stream exits subtitle C and can be disposed at a LLW disposal facility.
151B	Stabilized Listed Waste.	With an LDR treatment certification, this stream can be disposed at a subtitle C mixed waste disposal facility.
251	Waste stabilization with cementaceous reagent which complies with LDR requirements either via the treatment technology standard (STABL) or the appropriate concentration treatment standards.	For final and waste codes designations refer to streams 251A through 251D.

1

EDWARD CONSULTING ENGINEERS, INC.
20565 SW T.V. HWY #355 ALOHA, OREGON 97006
(503) 642-1999, FAX 649-6139

DRAWING NO | DRAWING TITLE
REFERENCE DRAWINGS
NEXT HIGHER ASSEMBLY:

				41614	SDN 4/23/14	PERMIT MODIFICATION REQUEST 134	1
			JM	PEB	2/16/98	ISSUE FOR TSCA/RCRA PERMIT APPLICATION	0
RR	MF	QA BY / DATE	ENGR BY / DATE	CHK BY / DATE	REV BY / DATE	DESCRIPTION	REV NO

REVISIONS

CADCODE ACADr13 | CADFILE 97211

ATG INC.
47375 FREMONT BOULEVARD
FREMONT, CA 94538

DRAWN MKB DATE 11/21/97
CHECKED
DFTG APVD
ENGR DAS
APVD
OTHER
QA
APPROVED FOR IMPLEMENTATION
BY
FOR DATE

MIXED WASTE FACILITY
STABILIZATION BLDG.

FUNCTIONAL FLOW
DESCRIPTION-LINE 100
SOLIDS/DEBRIS

SCALE NONE | SHEET NO 3 | SHEETS 7
DWG NO 31001-P-001-03 | REV 1

PERMIT FIGURE NUMBER: NONE