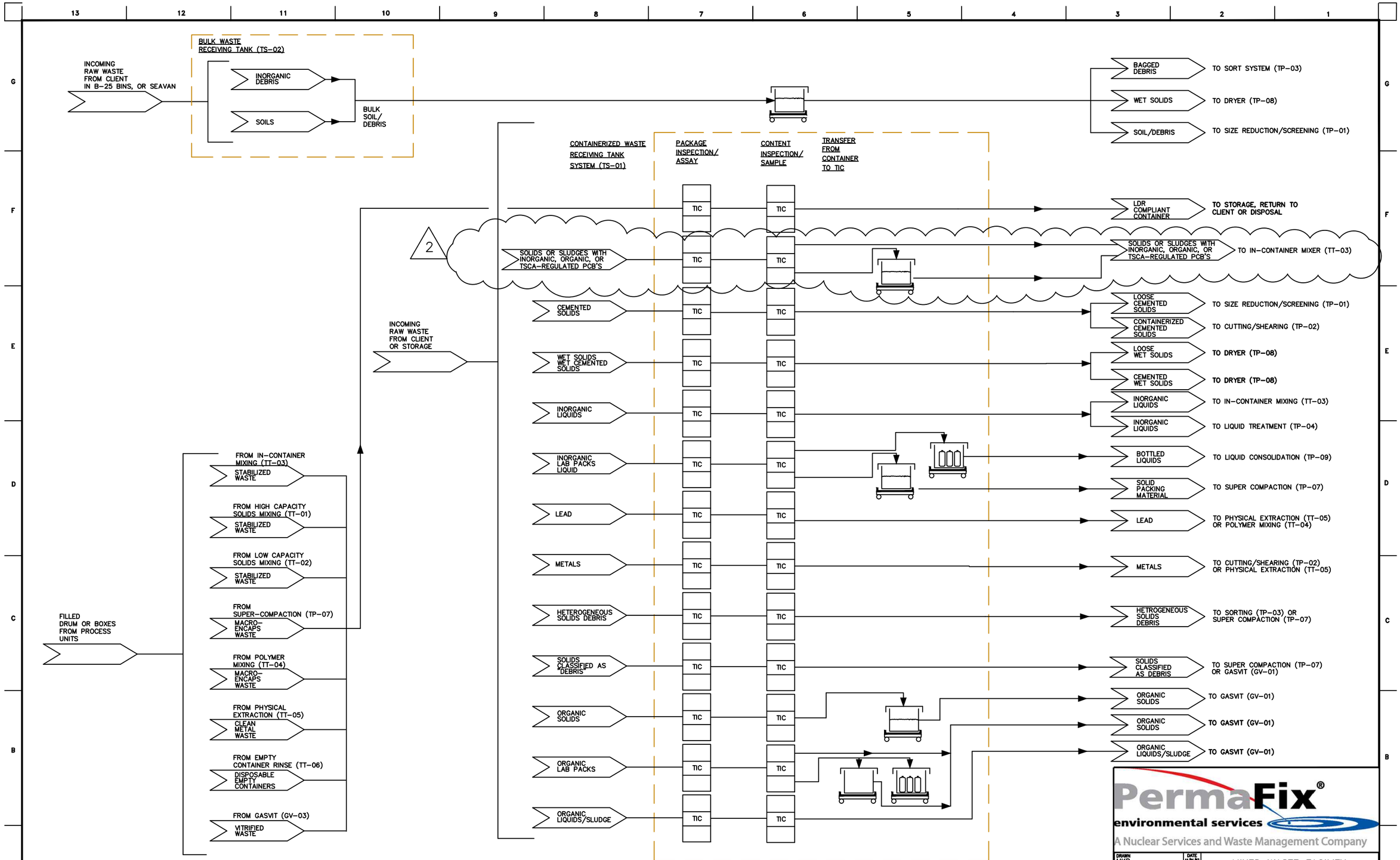

PermaFix® environmental services
A Nuclear Services and Waste Management Company

2					SN 2/23/16	PERMIT MODIFICATION REQUEST 134.	2	
1			JM	PEB	6/17/98	EDITORIAL CHANGES	1	
			JM	PEB	2/16/98	ISSUE FOR EPA PERMIT APPLICATION	0	
RR	MF	QA BY / DATE	ENGR BY / DATE	CHK BY / DATE	REV BY / DATE	DESCRIPTION	REV NO	

REVISIONS

DRAWING NO | DRAWING TITLE
REFERENCE DRAWINGS
NEXT HIGHER ASSEMBLY:

CADCODE ACADR13 | CADFILE 97211

DRAWN MKB | DATE 11/21/97
CHECKED
DFTG APVD
ENGR JM
APVD
OTHER
QA
APPROVED FOR IMPLEMENTATION
BY
FOR DATE

MIXED WASTE FACILITY
STABILIZATION BLDG.

PROCESS FLOW DIAGRAM
SOILS/INORGANIC DEBRIS

SCALE NONE | SHEET NO 1 | SHEETS 1
DWG NO 31001-P-002 | REV 2

PERMIT FIGURE NUMBER: NONE