Technical Specification

Section 15000

General Specifications

PART 1 – GENERAL

1.1 SCOPE

A. Provisions of this section apply to all work specified in all sections under Divisions 11, 14 and 15.

1.2 EXAMINATION OF PREMISES

A. Visit the site, verify all measurements and job conditions and pay all costs necessary to perform the work.

1.3 REGULATIONS, PERMITS, AND INSPECTIONS

A. Regulations: Comply with all applicable codes, rules, and regulations. All materials and work must comply with local and national construction, mechanical, plumbing, electrical, and fire codes including but not limited to the following:

National Electric Code/NEMA
American Society for Testing and Materials
Uniform Building Code
Uniform Mechanical Code
Uniform Plumbing Code
Underwriter's Laboratories
National Fire Protection Association
Resource Conservation and Recovery Act
U.S. Federal Environmental Protection Act
American National Standards Institute
Occupational Safety and Health Act

B. Permits: Obtain and pay for all required permits and licenses unless otherwise instructed by the Owner.

C. Inspections: All work must be inspected and approved by local authorities. Prior to final approval, furnish the Owner with certificates of inspection and approvals by the local authorities.

1.4 DRAWINGS AND SPECIFICATIONS

A. If a conflict exists between the drawings and specifications, promptly notify the Owner. The Owner will make the proper interpretation and his decision will be final.

B. Record Drawings and As-Built Drawings

1. Provide Record Drawings which clearly show all differences between the contract work as shown and installed. Piping mains below slab and/or grade and all branch lines below slab or grade in excess of 5 feet in length shall be dimensioned from columns or any permanent structure. Also, show all work added to the contract that is not shown on the contract drawings.
2. Maintain a set of marked drawings at the job site. Keep legible and current and available for inspection at all times by the Owner. Show all changes in the contract work or work added on these drawings in red color.
3. Upon substantial completion of the installation, transfer the information from the Record Drawings at the site to the As-Built Drawings on reproducible sheets that the Contractor shall obtain from the Owner. Record and As-Built Drawings shall be completed and delivered to the Owner prior to the completion of the contract.

1.5 WORK AND MATERIALS

A. Unless otherwise specified, all materials must be new and of the quality specified. The workmanship shall be of the highest quality. The Contractor must staff the project with sufficiently skilled workmen, including a fully qualified construction Supervisor, to complete the work in the time allotted. The Supervisor shall be qualified to supervise all of the work of each section.

B. Consult the Owner for approval prior to making material or equipment substitutions.

C. Arrange for purchase and delivery of all materials and equipment immediately after approval of submittals.

D. Cooperative Work/Interference

1. The Contractor shall be responsible for coordination and cooperation with trades to insure proper location of all work related to Division 15 with work provided under other divisions of these specifications.
2. Arrange the work schedule to prevent interferences with the work of other trades and cooperate with other trades.
3. Providing of sleeves, inserts, and anchor bolts shall be in coordination for work under sections in Division 15.
4. Electrical work shall be installed in coordination with all mechanical installation as specified herein. Refer to Division 16 for requirements.
5. Correct without charge any work requiring alteration due to lack of proper supervision, coordination, or failure to make proper provision in time or location. Correct without charge any damage to adjacent work caused by the alteration.

1.6 SHOP DRAWINGS

A. Submit shop drawings and all data equipment provided under Division 15, including the following:

Equipment room layouts, drawn to scale, including equipment piping and accessories, showing clearances for operating and servicing for the following equipment that apply to the job. Delete this requirement if actual equipment and arrangement proposed is physically identical to that indicated on the drawings. Index all submittals and reference to these specifications.

Process equipment.
Monorails, cranes and lifts.
Material handling systems.
Pipe, fittings, valves, and specialties showing manufacturer & type.
Valves of all types.
Expansion loops, joints, guides, and anchors.
Foundations, supports, and hangers.
Mixers.
Pumps, including characteristic curves.
Stainless steel tanks.
Liquid filtration equipment.
Insulation materials and finishes.
Ductwork, dampers, air distribution accessories, supports.
Air handling equipment including fan curves.
Blowers, including characteristic curves.
Exhaust units
Temperature control equipment, schematics, and diagrams.
Panelboards, gauges, and thermometers.
Wiring diagrams and motor control equipment. Wiring diagrams must be suitable for this project. Submission of manufacturer's "standard" wiring diagrams with various inapplicable voltages and alternate methods will not be acceptable.
All other equipment shown, indicated, specified, or required.

1.7 EQUIPMENT LIST, MAINTENANCE MANUAL, & OPERATING MANUAL

A. Prior to completion of the work, the Contractor shall compile a complete equipment list, maintenance manual, and operating instructions manual. Each shall be bound in a separate ring binder. Submit three (3) copies of each.

1. Equipment List

The equipment list shall include the following items for every piece of material and equipment supplied under this section of the specifications:
Name, model and manufacturer.
Complete parts drawings and list.

Local supply for parts or replacement, with address and telephone numbers.
Local service organization for equipment with address and telephone numbers.
All tags, inspection packages, inspection slips, etc. removed from equipment as shipped from the factory.
Electrical wiring diagram as applicable.
Copies of approved submittals (two (2) copies).

2. Maintenance Manual
The maintenance manual is to include the following:
Manufacturer's catalog data, maintenance and operating instructions as furnished by the Mechanical and Plumbing subcontractors.
Maintenance instructions on each different type of equipment with a schedule for preventive maintenance.
Check and repair sequence for equipment failure for each type of equipment.
Preventive maintenance schedule chart for all equipment.
Maintenance card system with one card for each piece of equipment keyed to the preventive maintenance schedule.
Record and As-Built Drawings herein specified and all other diagrams and instructions necessary to properly operate and maintain the equipment.
Name, address, and phone number of the General Contractor and all subcontractors involved in any of the work specified herein.
Balance report.

3. Operating Instructions Manual
Operating Instructions Manual shall include:
Description of each type of component.
Description of each system.
Start-up procedure for each component.
Start-up procedure for each system.
As-built drawings, photo-reduced to bind in the manual.

1.8 EQUIPMENT DESIGN

A. Uniformity: Unless otherwise specified, provide all equipment of same type or classification by the same manufacturer.

B. Application: Do not install any equipment in an application not recommended by the manufacturer.

C. Design: Design all equipment in accordance with ASME, AGA, UL, and other applicable technical standards as follows:

Pressure vessels	ASME Code constructed and stamped
Electric appliances	UL labeled
Fire protection equipment	UL and FM approved and labeled
Fans AMCA rated and stamped	
Cooling equipment	ARI certified

1.9 WORK IN EXISTING BUILDINGS

A. Demolition in existing buildings: In these areas of the existing building which are having major alterations, the Contractor shall remove existing material which will not be reused. The Contractor shall be responsible for capping services in demolition areas to insure a safe condition.

B. Continuity of services in existing building: The Contractor shall permanently reroute existing services or provide temporary connection as required to maintain service to existing fixtures or equipment in the building which are to remain in service.

C. Rerouting and relocation of existing mechanical equipment and services in existing building: The Contractor shall reroute and relocate all existing mechanical work which is in conflict with the building alterations and which is required to be maintained in use. Where applicable and upon Owner approval, existing material (piping and ductwork) may be reused in their original location unless otherwise noted or shown.

PART 2 -- PRODUCTS

2.1 ELECTRICAL WORK

A. Electrical wiring for all raceways, conduits, outlet and junction boxes, and labor for installation of the wiring shall be under Division 16 of the specifications.

B. All starters (unless specifically specified to be furnished with a piece of equipment furnished under this section) and motor control centers are to be furnished and installed in accordance with Division 16 of the specifications.

C. Furnish and install all electric automatic temperature control devices, thermostats, relays, pneumatic electric switches, automatic control switches, thermostats, relays, wire, conduit, automatic control switches and pilot lights.

D. The Contractor shall provide all shop drawings and wiring diagrams complete with all connection details. Wiring diagrams must be free from confusing optional methods that do not apply. Wiring diagrams must be complete with all necessary information and must correctly indicate the conditions of this specific job.

E. Before ordering any motors and equipment, verify the available voltage and phase for all motors with the Owner.

F. Submit a complete list of all motors prior to final closeout of the job indicating the locations, horsepower, voltage, phases, and amperage draw of each motor and the power panel source identification.

G. All field wiring and equipment must conform to the applicable sections in Division 16 of the specifications.

2.2 ELECTRIC MOTORS

A. Motors 3/4 hp and larger except as otherwise noted shall be designated for 460VAC, 3 phase, 60 hertz power supply.

B. Motors 1/2 hp and smaller shall be designed for 120VAC, single phase, 60 hertz power supply.

C. Motors shall be copper wound and conform to all applicable requirements of NEMA, IEEE, ANSI, and NEC standard. They shall be free from defective material and workmanship and fully capable of performing in accordance with the manufacturer's nameplate rating.

D. Motors shall be approved by Underwriter's Laboratories (UL) for the service specified with a minimum safety factor of 1.15.

E. Nameplate requirements:

- Horsepower
- RPM
- NEMA design
- Phase
- Hertz
- Service factor
- Ambient temperature
- Frame size
- Duty
- Class of insulation
- Locked KVA code
- Full load amps
- Manufacturer name
- Model or catalog number
- Bearing identification

F. Motors shall be energy efficient similar to Gould E-Plus or equal as manufactured by General Electric, Westinghouse, Century, U.S. Electric, or Sterling.

G. Motors integral with the equipment to be of the type recommended by the equipment manufacturer except where noted on the drawings or in the specifications.

H. Motors not directly exposed to weather and located in nonhazardous areas shall be in open drip-proof enclosures.

I. Motors exposed to weather or process chemicals or water spray shall be in totally enclosed fan cooled enclosures.

J. Single phase motors shall have built-in overload protection of the single pole, automatic reset type. Use manual reset type where frequent start-stop may constitute a hazard.

K. Hermetic polyphase motors shall have built-in hermetic thermostatic protection devices to interrupt the control circuit and protect the motor from overheating. All motors shall be ball bearing type with a minimum of 1.15 safety factor.

L. Bearings shall be shielded, regreasable, vacuum degassed steel ball bearings, specially selected for electric motor service, and longer life expectancy. Bearings shall be lubricated with a premium moisture resistant grease formulated to operate over a temperature range of -20F to +300F. Bearing identification by AFBMA number shall be shown on the motor nameplate.

M. Corrosion-resistant cadmium plated grease plugs shall be provided for re-lubrication of bearings.

N. Motors including their mountings, face plates and shaft sizes shall be built to NEMA Standard dimensions and with UL approved terminal boxes. Motors 3/4 hp and larger to have plugged tapping at top and bottom of bearing housing for proper changing of bearing lubrication.

O. High-starting torque, totally enclosed or explosion proof motors shall be used in all hazardous areas.

P. Motors 3/4 hp and larger and all automatically started motors 1/2 hp and smaller to have magnetic starters for overload and undervoltage protection (on all phases). Starters shall be in accordance with Division 16.

Q. Where indicated in Division 15, furnish motor starters of a premium line equivalent to Allen-Bradley, Westinghouse, Square D, or Cutler-Hammer (starters shall match the manufacturer of the motor control center). Provide starters with a minimum of 2 auxiliary contacts, low voltage release and 120 volt holding coils.

R. Contractor shall include mounting and final alignment of all motors (applies to Contractor or Owner furnished motors).

S. Two-speed motors shall be provided where indicated and shall be of the following type: multi-speed, squirrel cage induction motors shall be 2-winding, 2-speed variable torque; motors shall be copper wound, YY star connected or delta connected for control by the 2-speed, 2-winding starter.

2.2 MACHINERY DRIVES

A. Use V-belts designed for 150% of capacity for all belt drives. For multiple belt drives, use matched sets, so marked at the factory.

B. On drives with not more than two belts, provide adjustable pitch motor sheaves with the midpoint of the adjustment range equal to that required to achieve the specified fan capacity.

C. On motors with drives with more than two belts, furnish nonadjustable sheaves, providing the specified fan capacity.

D. After tests have been performed on the air handling systems, make without cost not more than two changes in the size of the nonadjustable sheaves to obtain the required air quantities.

2.3. MACHINERY ACCESSORIES

A. Lubricating devices: Provide all oil level gauges, oil pressure gauges, grease cups, grease gun fittings, as required by the equipment. Extend all lubricating fittings to readily accessible locations.

B. Guards: Provide totally enclosed OSHA type belt guards for all rotating equipment. Design guards to be readily removable for access to belt drives.

PART 3 – EXECUTION

3.1 PROTECTION OF APPARATUS

A. At all times take such precautions as are necessary to protect the apparatus from damage caused by theft, the weather, and all building operations. Failure to protect the material and apparatus adequately to the entire satisfaction of the Owner shall be sufficient cause for the rejection of any damaged material or equipment. All pipe and equipment openings shall be closed and sealed to prevent entrance of dirt or moisture and to prevent obstruction and damage.

3.2 INSTALLATION

A. Installation:

1. Contractor shall align, level, and adjust all equipment for proper operation (applies to Contractor or Owner furnished equipment). Install so connecting and disconnecting of piping and accessories can readily be performed and so all parts are readily accessible for inspection, service, and repair. Install equipment in accordance with the manufacturer's recommendations.

B. Verification of Dimensions:

1. Scaled and figured dimensions are approximate only. Before proceeding with work, carefully check and verify dimensions at the site, and be responsible for properly fitting equipment and materials together and to the structure in spaces provided.
2. Drawings are essentially diagrammatic and many offsets, bends, special fittings and exact locations are not indicated. Carefully study the drawings and premises in order to determine best methods, exact locations, routes, building obstructions, and install apparatus and equipment in available locations. Install apparatus and equipment in manner and in locations to avoid obstructions, preserve headroom, and keep openings and passageways clear.

C. Cutting and Patching:

1. Cut other work and patch as necessary to properly install the new work. As the work progresses, leave necessary openings, holes, chases, etc., in their correct location. If the required openings, holes and chases are not in their correct locations, make the necessary corrections at no additional cost to the Owner. Avoid excessive cutting and do not cut structural members without the consent of the Owner.

D. Noise and Vibration:

1. Construct and brace the metal partitions, ducts, and sheet metal housings to prevent vibration or rattling when systems are in operation. Install connections to equipment so noise and vibration will not reach the work area through ducts, piping, conduits, sheet metal work, or the building structure. Provide power-driven equipment suspended from the structure with spring-type isolation.

E. Accessibility:

1. Install valves, dampers, thermometers, gauges, traps, cleanouts, control devices, or other specialties requiring reading, operation adjustment, inspection, repairs, removal, or replacement conveniently and accessibly throughout the finished building. Unions, valves, controls, etc. shall not be placed in any pipeline that will be inaccessible after the system is complete.
2. All access doors or panels in walls and ceilings required for access to control devices, traps, valves, and similar devices are to be furnished and installed as part of the work under this section.
3. Provide ducts that pierce a fire separation with fire dampers of same fire rating as the separation.
4. Coordinate work of various sections to locate valves, traps, and dampers, with others to avoid unnecessary duplication of access doors.

F. Roof Flashings:

1. Flash and counterflash all piping, conduits, and ductwork penetrating roofing membrane with metal flashing, as specified herein. Asphaltic plastic cement sealing is not acceptable.
2. Provide all piping and conduit roof penetrations with open top type counterflashing assembly consisting of four pound lead flashing with 12" skirt.
3. Provide ducts penetrating roof with curb and flashing. Run roofing over cants and curb and counterflash duct over curb and roofing. Seal all joints in ducts with waterproof mastic. See additional details on the drawings.

G. Connection to Services:

1. Provide connections to sanitary and storm sewer lines, gas lines, water lines, electrical services furnished under other contracts, except as otherwise specifically designated. Provide all necessary tees, taps, and connections

required to properly connect to all mains.

H. Electrical Work:

1. The Contractor must be responsible for the checking and testing of all controls and interlocks for a complete and satisfactory operating system.

3.3 CLEAN-UP

A. Thoroughly clean all parts of the equipment. Where exposed parts are to be painted, thoroughly clean off any splattered construction materials and remove all oil and grease spots. Wipe the surface carefully and scrape out all cracks and corners.

B. Thoroughly flush and clean out all water circulating systems. Remove, clean, and replace all strainer elements.

C. During the progress of the work, keep the premises clean and free of debris.

3.4 WELDING

A. Codes and standards: All welding and other criteria covered by this specification shall be in accordance with the following codes:

ASME Boiler and Pressure Vessel Code, Section IX
ANSI Code for Power Piping, B31.1

B. All procedures and welders must be qualified in accordance with the requirements of Section IX, ASME Boiler and Pressure Vessel Code. Procedure qualification test records and acceptance shall be submitted with the welding procedure prior to the start of fabrication. Owner's inspector or authorized representative will review performance qualification records of individual welders.

C. Welding Processes: The following welding processes are permitted, provided that the procedure is qualified in accordance with Section IX, ASME Boiler and Pressure Vessel Code.

Manual shielded metal-arc welding process
Tungsten inert gas arc welding process
Automatic orbital tube arc welding process

Other welding processes may be used providing they are qualified in accordance with Section IX, ASME Boiler and Pressure Vessel Code.

D. Restrictions: Weld bevel preparations shall be machined or ground to remove all discoloration if flame or arc cut.

E. Welding filler materials: All shielded metal-arc welding shall be performed using low hydrogen type electrodes such as E7018. A filler material control procedure shall be submitted to the Owner for review and acceptance prior to performing any welding.

F. Preheat and interpass temperature: Preheat for pressure components shall be as specified in Table 132 of ANSI B31.1. Preheat and interpass temperature shall be determined by temperature indicating crayons, contact pyrometers, or other equally suitable means.

G. Postweld heat treatment: Postweld heat treatment for pressure components shall be as specified in Table 131 of NSI B31.1.

3.5 PIPE AND EQUIPMENT SUPPORTS

Where supports, foundations, stands, suspended platforms for machinery, tanks, or other equipment are indicated or specified, perform the following:

A. Locate support members to avoid equipment strains and interference with operating controls and valves, piping connections, tube pulling, or other maintenance operations.

B. Where saddles are required, use cast iron or welded steel saddles with curvature to fit the tank shell unless furnished with tanks.

C. Mount power-driven equipment on common base with driver. Equipment must be level and square.

D. Grout under all equipment after leveling, filling completely the space between machinery bed plate and foundation surface. Finish exposed surface of grout for a neat appearance.

E. Floor stands: Where equipment is mounted standard or on legs, construct of structural steel or steel pipe and fittings, cross-brace and fasten with flanges or plates bolted to the floor.

F. Ceiling or wall supports: Use suspended platform, strap hangers, bracket or shelf, whichever is most suitable for equipment and location. Construct of structural steel members, steel plates, rods, or pipe as required. Cross-brace and fasten to building structure or inserts in an approved manner.

G. Steel work: Neatly fabricate and erect steel work with burrs and welding spatter ground off. Paint after fabrication with a rust-inhibitive primer.

3.6 TESTING

A. Provide all labor, materials, and services required for the testing of all systems unless noted otherwise.

1. Test Procedure
   a. Make tests before the rough work is covered. The system may be tested in parts if approved.
   b. When the tests show the work in any way defective, remove the defective material or equipment from the premises and retest at no additional cost to the Owner.
   c. Make piping tests on all piping as required by code or provide a 150 psi hydrostatic pressure test for four hours, unless otherwise noted.
   d. Coil condensate drain piping: Fill to highest point of system for four hours.
2. Testing Out
   a. Check out and test operate all equipment installed under the Mechanical and Electrical divisions of these specifications.
   b. Check electrical work to see that the power is properly supplied to all electrical motors and that all electric controls are properly hooked up in the control circuits. Furnish a list of the voltage and current readings taken under load of all motors.
   c. Check all work and see that all controls are in good working order and properly adjusted. After the equipment has been properly adjusted, start up and run all equipment enough to determine that the controls and equipment are all operating properly and that the installation is complete. During the test runs, balance the water flow as required in the piping circuits after the cooling and ventilation systems are connected to provide the proper water quantities to all equipment.
   d. Fill water pipe lines, flush, drain, and then refill with clear water. Repeat this procedure three times, under the observation of the Owner.
   e. When the test or observation show that the work is in any way defective or at a variance with the specification or drawing requirements, immediately make all changes necessary to correct the work and remedy the defects to the satisfaction of the Owner. Remove any defective material or equipment from the premises. In the event the Contractor does not remedy all defects and make all changes demanded by the Owner within a reasonable time, the right is reserved to have the defects remedied or changes made and to charge the cost of the work against the account of the Contractor.
3. Final Tests
   a. Before acceptance and at a time designated, make a complete test to demonstrate that the systems are balanced for even operation throughout, that all controls are adjusted, and, in general, the systems are placed into proper operation. Furnish a skilled operating engineer for a period of at least one day, at time or times designated by the Owner, to instruct the Owner's representative in the operation and maintenance of the equipment.

PART 4 – SURVEILLANCE, MAINTENACE & CALIBRATION

4.1 INTRODUCTION

A. The following table (Table 1) define the frequency of surveillance, functionality testing,

preventative maintenance, and calibration for equipment specified in Divisions 11, 14 and 15.

B. All procedures to be implemented as per the manufacturer's recommendations/procedures.

C. During Surveillance the following should be done:
   1. Measured value to be recorded, status of lights to be recorded;
   2. Equipment should be noted for visible problems: leaks, cracks, disconnected wires, etc.

D. During Functional Testing the following items should be inspected:
   1. Each piece of equipment shall be started to show proper function.
   2. Each indicating device shall be modulated to show proper function. (i.e. alarm sounds, etc).

E. During Preventative Maintenance the following items should be inspected:
   1. Perform preventative maintenance in accordance with manufacturer's recommendations (lubrication, etc.)
   2. Inspect wire insulation for cracks, scars, deterioration, and loose connections.
   3. Inspect for liquid/air leaks.
   4. Removing any dust accumulation from internal components.

F. Calibration shall be performed as required by manufacturer.

G. If problems are detected during the above procedures (parts C through F), they shall be reported to the on shift supervisor, and corrective action taken.

TABLE 1: MAINTENANCE SCHEDULE

COMPONENT	Tag Number	Surveillance	Functional Test	Preventative Maintenance	Calibration
Waste Container Lift	TT-01-E-0102	As Used	3 Months	6 Months	N/A
Waste Feeder	TT-01-F-0103	As Used	3 Months	6 Months	Annually
High Capacity Solids Mixer	TT-01-MX-0104	As Used	3 Months	6 Months	N/A
Reagent Feeder	TT-01-F-0106	As Used	3 Months	6 Months	Annually
Reagent Container Lift	TT-01-E-0107	As Used	3 Months	6 Months	N/A
Waste Container Lift	TT-02-E-0202	As Used	3 Months	6 Months	N/A
Waste Feeder	TT-02-F-0203	As Used	3 Months	6 Months	Annually
Low Capacity Solids Mixer	TT-02-MX-0204	As Used	3 Months	6 Months	N/A
Reagent Feeder	TT-02-F-0206	As Used	3 Months	6 Months	Annually
Reagent Container Lift	TT-02-E-0207	As Used	3 Months	6 Months	N/A
In-Container Mixer	TT-03-MX-1301	As Used	3 Months	6 Months	N/A
~~Container~~ **Metering** Pump	TT-03-PMP-1308	As Used	3 Months	6 Months	N/A
~~Reagent Feeder~~ **Hydraulic Pump**	TT-03-~~FPMP~~-130~~6~~**1**	As Used	3 Months	6 Months	~~Annually~~**NA**
~~Bin Elevator~~	~~TT-03-E-1310~~	~~As Used~~	~~3 Months~~	~~6 Months~~	~~N/A~~
Polymer Pellet Feeder	TT-04-F-0401	As Used	3 Months	6 Months	N/A
Waste/Polymer Mixer	TT-04-MX-0404	As Used	3 Months	6 Months	N/A
Waste/Polymer Feeder	TT-04-F-0407	As Used	3 Months	6 Months	Annually
Extruder	TT-04-F-0409	As Used	3 Months	6 Months	N/A
Waste Feeder	TT-04-F-0413	As Used	3 Months	6 Months	N/A
Waste Container Lift	TT-04-E-0415	As Used	3 Months	6 Months	N/A
Container Pump	TT-05-PMP-0501	As Used	Monthly	6 Months	N/A
Abrasive Blast Booth	TT-05-ABB-0503	As Used	6 Months	6 Months	N/A
Abrasive Rinse Pump	TT-05-PMP-0507	As Used	6 Months	6 Months	N/A
Abrasive Wash Pump	TT-05-PMP-0505	As Used	6 Months	6 Months	N/A
CO2 Jet Pump	TT-05-PMP-0515	As Used	6 Months	6 Months	N/A
Triple Rinse Drum Washer	TT-06-Z-0601	As Used	6 Months	6 Months	N/A
Drum Washer Recirculation Pump	TT-06-PMP-0602	As Used	Monthly	6 Months	N/A
Tote and Bin Washer	TT-06-Z-0603	As Used	6 Months	6 Months	N/A
High Pressure Pump	TT-06- PMP -0604	As Used	Monthly	6 Months	N/A
Rinse Pump	TT-06- PMP -0605	As Used	Monthly	6 Months	N/A
Scavenger Pump	TT-06- PMP -0606	As Used	Monthly	6 Months	N/A
Empty Drum Compactor	TT-06-CPR-0610	As Used	6 Months	6 Months	N/A
Drum Dumper	TP-01-E-0101	As Used	6 Months	6 Months	N/A
B-25 Dumper Elevator	TP-01-E-0102	As Used	6 Months	6 Months	N/A
Enclosed Metering Conveyor	TP-01-CV-0103	As Used	6 Months	6 Months	N/A
Shear Shredder	TP-01-SHR-0105	As Used	6 Months	6 Months	N/A
Size Reduction Feeder	TP-01-F-0106	As Used	6 Months	6 Months	N/A
Filter Baghouse	TP-01-BH-0108	As Used	6 Months	6 Months	N/A
Monorail Crane	TP-02-CRN--0201	As Used	6 Months	Annually	N/A
Metal cutting Saw	TP-02-MC-0207	As Used	6 Months	6 Months	N/A
Enclosed B-25 Box Dumper	TP-03-E-0301	As Used	6 Months	6 Months	N/A
Feed Conveyor	TP-03-CV-0303	As Used	6 Months	6 Months	N/A
Drum Dumper	TP-03-E-0302	As Used	6 Months	6 Months	N/A

Formatted Table

Formatted: Font: Bold, Font color: Green, Not Strikethrough

Formatted: Font color: Auto, Not Strikethrough

Formatted: Font color: Auto, Not Strikethrough

Formatted: Font: Bold, Font color: Green, Not Strikethrough

Formatted: Font color: Auto, Not Strikethrough

Formatted: Font: Bold, Font color: Green, Not Strikethrough

Liquid Treatment Tank #1	TP-04-TK-0403	Daily	N/A	6 Months	N/A
Liquid Treatment Tank #2	TP-04-TK-0406	Daily	N/A	6 Months	N/A
Liquid Treatment Tank Mixer #1	TP-04-MX-0402	Daily	Monthly	6 Months	N/A
Liquid Treatment Tank Mixer #2	TP-04-MX-0405	Daily	Monthly	6 Months	N/A
Liquid Bag Filter #1	TP-04-FLT-0404	Daily	Monthly	6 Months	N/A
Liquid Bag Filter #2	TP-04-FLT-0410	Daily	Monthly	6 Months	N/A
Container Pump	TP-04-PMP-0401	Daily	Monthly	6 Months	N/A
Chemical Feed Pump #1	TP-04-PMP-0412	Daily	Monthly	6 Months	N/A
Liquid Treatment Pump #1	TP-04-PMP-0409	Daily	Monthly	6 Months	N/A
Liquid Treatment Pump #2	TP-04-PMP-0411	Daily	Monthly	6 Months	N/A
Liquid Treatment Piping System	N/A	Daily	N/A	6 Months	N/A
Leak Detection System	N/A	Daily	Monthly	6 Months	N/A
Liquid Holding Tank #1	TP-06-TK-0603	Daily	N/A	6 Months	N/A
Liquid Holding Tank #2	TP-06-TK-0606	Daily	N/A	6 Months	N/A
Liquid Holding Tank Mixer #1	TP-06-MX-0602	Daily	Monthly	6 Months	N/A
Liquid Holding Tank Mixer #2	TP-06-MX-0605	Daily	Monthly	6 Months	N/A
Container Pump	TP-06-PMP-0601	Daily	Monthly	6 Months	N/A
Liquid Holding Pump #1	TP-06-PMP-0609	Daily	Monthly	6 Months	N/A
Liquid Holding Pump #2	TP-06-PMP-0611	Daily	Monthly	6 Months	N/A
Carbon Filter System	TP-06-FLT-0612	Daily	Monthly	6 Months	N/A
Ion Exchange System	TP-06-FLT-0613	Daily	Monthly	6 Months	N/A
UV Oxidizer	TP-06-Z-0610	Daily	Monthly	6 Months	N/A
Liquid Holding Piping System	N/A	Daily	N/A	6 Months	N/A
Leak Detection System	N/A	Daily	Monthly	6 Months	N/A
In-Barrel Compactor	TP-07-CPR-0705	As Used	3 Months	6 Months	N/A
Jib Crane	TP-07-CRN-0706	As Used	6 Months	Annually	N/A
Super Compactor Assembly	TP-07-CPR-0707	As Used	3 Months	6 Months	N/A
Grout Mixer	TP-07-MX-0710	As Used	3 Months	6 Months	N/A
Sump Pump	TP-07-PMP-0715	Daily	Monthly	6 Months	N/A
Dryer System	TP-08-HT-0803	As Used	3 Months	6 Months	N/A
Condenser	TP-08-CD-0806	As Used	N/A	6 Months	N/A
Consolidation Box	TP-09-Z-0901	As Used	6 Months	6 Months	N/A

END OF SECTION

Technical Specification

Section 15060

Pipe and Pipe Fittings General

PART 1 -- GENERAL

1.1 WORK INCLUDED

A. This Section specifies the requirements to furnish and install the plant piping systems. The work shall include, but not be limited to all pipe, tubing, hangers, supports, restraints, isolators, pipe cleaning, sterilization, testing and cleaning.

1.2 RELATED SPECIFICATIONS

A. This Section shall be used in conjunction with the following other specifications and related Contract Documents to establish the total requirements for the project piping systems:

1. Section 15000 - Basic Mechanical Requirements.
2. Section 15061 – Carbon Steel Piping Systems
3. Section 15066 - Cast Iron Piping Systems
4. Section 15069 – Stainless Steel Tubing Systems
5. Section 15070 – Stainless Steel Piping Systems
6. Section 15075 – Copper Piping Systems
7. Section 15090 – PVC & CPVC Piping Systems
8. Section 15091 – Double Contained Piping Systems.

B. In the event of conflict regarding requirements between this Section and any other section, the provisions of this Section shall govern.

1.3 QUALITY ASSURANCE

A. Quality of materials must conform to the codes and standards listed in detailed piping systems sections.

B. Owner reserves the right to reject all or part of any system that does not conform to the requirements of this specification. Any rejected materials or equipment shall be replaced or reworked to conform to this specification at the Contractor's expense.

C. Owner's representative will have the authority to approve or disapprove materials, equipment or workmanship provided by the Contractor. He shall have full technical jurisdiction over the Contractor in matters relating to quality and control of the cleaning, fabrication, installation, and testing of the systems. All problems, requests, questions, etc., relating to this specification or methods, procedures, and revisions shall be subject to his approval. The pressure and purity testing shall be witnessed and/or verified by him. Any rejected material or equipment will be removed at Contractor's expense.

1.4 REFERENCES

A. All piping shall conform to all applicable codes and standards as defined herein. If codes or standards are not specified for a particular application, the Contractor shall follow standard industrial practice, being sure that the material or methods used shall conform to local and State codes and shall result in a final installation that will perform reliably for the purpose or use intended. The following list summarizes the organizations whose codes and standards are specifically required in these specifications:

1. ASA - American Standard Association Code for Pressure Piping
2. ASTM - American Society for Testing Materials
3. ASME - American Society of Mechanical Engineers
4. ANSI - American National Standards Institutes
5. AWS - American Welding Society
6. AWWA - American Water Works Association
7. CISPI - Cast Iron Soil Pipe Institute
8. CPI - Chemical Petroleum Institute
9. NSF - National Sanitation Foundation
10. SMACNA - Sheet Metal and Air Conditioning Contractor's National Association
11. NFPA - National Fire Protection Association
12. OSHA - Occupational Safety and Health Act
13. UPC - Uniform Plumbing Code

14. UMC - Uniform Mechanical Code
15. Local codes

B. The codes and standards required by these Specifications are defined by code designation and section (for example, ANSI B.31.1). The Contractor shall be responsible for determining the exact requirements specified in the code or standard. The codes and standards used shall be the latest at the time of the Contract unless otherwise specified.

C. If the Contractor determines a conflict between the specified codes and standards and the content of these Specifications, the Contractor shall promptly notify the Owner for resolution.

PART 2 -- PRODUCTS

2.1 GENERAL

A. The materials to be used for the piping systems shown on the Drawings are listed by service and Pipe Class.

B. All piping components shall be new, clean, nonsurplus.

2.2 PIPE CLASS

A. The Pipe Class Specification Sheets provided at the end of each Detail Piping System Specification specify the pipe required for each pipe class. A three-letter code is normally used. The first letter identifies the pipe material, the second letter designates the system pressure rating, the third letter indicates the type of connection or special service requirements. The fourth letter designates the special service.

2.3 AIR VENTS AND LOW POINT DRAINS

A. Vents and drains at all high and low points in the piping that are required for complete venting and draining shall be installed. In addition, provide drain valves at main shut-off valves, bases of vertical risers and at equipment.

B. Vent the high point and drain the low point with 3/4-inch ball valves on those pipelines 2 1/2 inch and larger and 1/2-inch ball valves on those pipelines 2 inch and smaller. Each drain or vent valve shall be capped with a screwed cap.

PART 3 -- EXECUTION

3.1 DRAWINGS

A. Reducers are concentric unless otherwise noted.

B. Flanges:

1. Flange bolt holes are to be oriented as follows, unless otherwise indicated:
   a. Flange face vertical: Bolt holes to straddle the vertical centerlines.
   b. Flange face horizontal: Bolt holes to straddle plant north-south centerlines.
2. Welds at orifice flanges shall have internal surfaces ground smooth to the pipe wall.
3. Slip-on flanges shall be welded inside and outside. There shall be a distance of approximately 1/16 to 1/8 inch between the edge of the fillet weld and the face of the flange. The seal weld shall be applied so that the flange face shall be free of weld spatter and does not require refacing.
4. Use flat-faced flanges when mating to Class 125 flanges. Use full-face gaskets with flat-faced flanges and ring gaskets with raised faced flanges.
5. Weld neck flanges shall be used with butt-weld fittings.
6. Flange bolts shall be torqued to the minimum value required by the manufacturer of the gasket material specified.
7. The bore of weld-neck flanges shall match the pipe wall thickness.

C. Seal Welding:

1. When seal welding is required, connections shall be made without using sealing compound or Teflon tape.

2. Do not seal weld threaded joints that have failed a pressure test unless all thread compound and Teflon tape have been removed.
3. Seal welds of threaded connections shall cover all exposed threads.

D. Bolts: All bolt threads are to be coated with Never-Seez prior to being made up with nuts unless otherwise specified in the Detail Piping System Specifications or Pipe Class Specification Sheets. Alternate coating shall be used only with prior review of the Owner.

E. Dimensional Tolerances:
1. These tolerances apply to in-line items and connections for other lines.
2. General dimensions such as face-to-face, face on end-to-end, face or end-to-center, and center-to-center: plus or minus 1/8 inch.
3. Inclination of flange face from true in any direction: 3/64 inch per foot.
4. Rotation of flange bolt holes shall not exceed 1/16 inch.

F. Building Piping:
1. Provide chrome escutcheon finish plates where piping passes through walls, floors, or ceilings in finished areas and cabinets.
2. It shall be the Contractor's responsibility to verify the size and location of all major piping penetrations of footings, slabs, floors, walls, and roofs prior to pouring concrete or finishing.
3. Wall pipes and pipe sleeves embedded in concrete walls, floors, and slabs shall be embedded. Support all pipes embedded in concrete walls, floors, and slabs with form work to prevent contact with the reinforcing steel.
4. Galvanized steel pipe sleeves shall be used on all standard wall penetrations. Waterproof pipe sleeves manufactured by Link-Seal that incorporate waterproof membrane seals shall be used for all piping penetrating exterior walls, roof, and floor slabs on grade.
5. Galvanized or PVC sleeves shall be used on penetrations of footing walls and grade beams.
6. All piping shall be installed parallel to horizontal and vertical building lines except as indicated in the plan drawings. Uniform slope between bottom-of-pipe elevations defined on the plan drawings shall be maintained.
7. Where unions are indicated on the Drawings, dielectric unions shall be used for the following service locations:
   a. Aboveground/underground dissimilar metal pipe transitions.
   b. Copper/steel transitions for cold services, less than 60 degrees F.
   c. Copper/steel transitions for services greater than 60 degrees F, bronze or brass unions are required.

3.2 PIPING FABRICATION

A. General:
1. The Contractor shall employ only labor that has been qualified by training and experience to capably perform the specified activities required to accomplish the work in a satisfactory manner.
2. Upon request by the Owner, the Contractor shall designate a quality assurance inspector who is acceptable to the Owner to inspect the installation, cleaning, and testing of the piping systems.
3. If the Contractor has developed alternative techniques or intends to apply alternative methods considered equivalent to those indicated herein, a proposal on such techniques or methods shall be submitted in writing to the Owner for review at least 14 days before intended date of use.

3.3 PIPING EXPANSION AND FLEXIBILITY

A. Allow for pipe expansion in mains, runouts, and risers by means of natural flexibility in piping swing joints and by expansion loops.

B. All piping shall be installed with sufficient flexibility to avoid or minimize the use of flexible couplings or expansion joints. Flexible couplings or expansion joints shall be provided for

piping connections to equipment where shown. Use of additional flexible couplings or expansion joints, shall be approved by the Owner prior to purchase and installation. Contractor shall submit to the Owner complete details describing locations, pipe supports, hydraulic thrust, seismic protection and materials proposed for use.

3.4 PRESSURE TESTING

A. General:

1. The pressure testing requirements defined herein apply to all piping systems.
2. Testing shall be performed by the Contractor on all piping after erection but before any installation of insulation. Furnish all necessary equipment and material and make all taps in the pipe, as required. The Owner will monitor the tests.
3. Unless otherwise required by the Specifications, shop fabricated pipe spools are not required to be hydrostatically tested at the shop. Spools shall be field tested after erection. The shop fabricator shall be responsible for the cost of correction of any defects revealed during field hydrostatic tests.
4. Test fire protection line per NFPA.
5. The following piping & equipment shall not be subjected to hydrostatic and pneumatic pressure testing:
   a. Rotating machinery, such as pumps, turbines, and compressors.
   b. Pressure relieving devices, such as rupture discs and pressure relief valves.
   c. Vessels that do not satisfy impact requirements at the piping test temperature, and all vessels regardless of rating when using gas pressure for testing.
   d. Locally mounted pressure indicating gauges, where the test pressure would exceed their scale range.
   e. In line instrumentation, unless otherwise specified in these Specifications.

B. Special Requirements for Pneumatic Testing

1. The Contractor shall recognize the hazards associated with air testing and shall take all necessary precautions to protect test personnel and Owner's operating personnel. All piping to be tested shall be secured to prevent damage to adjacent piping and equipment in the event of a joint failure. Any pertinent instruments or devices that could be damaged by the test shall be removed from the piping or suitably isolated prior to applying the test. Prior to starting the test, the Contractor shall notify the Owner.
2. A preliminary pneumatic test not to exceed 25 psig shall be applied to the piping system prior to final leak testing, as a means of locating major leaks. Examination for leakage, detected by soap bubbles, shall be made at all joints and connections. After all visible leaks have been corrected, the pressure in the system shall gradually be increased to not more than one-half of the test pressure, after which the pressure shall be increased in steps of approximately one-tenth of the test pressure until the required test pressure has been reached. The piping system, exclusive of possible localized instances at pump or valve packing, shall show no evidence of leakage. Any visible leakage shall be corrected at the Contractor's sole expense.

C. Testing Buried Piping:

1. Conduct final acceptance tests on buried piping that is to be pressure tested after the trench has been completely backfilled. The Contractor shall, if field conditions permit, as determined by the Owner, partially backfill the trench and leave the joints open for inspection and conduct an initial service leak test. The acceptance test shall not, however, be conducted until all backfilling has been completed.
2. Where any section of pipe is provided with concrete reaction blocking, do not conduct the pressure test until at least five days have elapsed after the concrete thrust blocking is installed.

3. Buried piping that is to be pneumatically tested or subjected only to an initial service leak test shall have all joints exposed for the acceptance test.

D. Test Procedures:
1. Calibration records for gauges used for testing shall be submitted to Owner.
2. Two pressure gauges shall be installed for each testing system. Gauges used for testing shall be installed as close as possible to the low point of the piping system.
3. When starting the filling of lines to be hydrostatically tested, all vents and other connections that can serve as vents shall be open during filling so that all air is vented prior to applying test pressure to a system.
4. If the maximum operating conditions of piping attached to a vessel are the same as those of the vessel, then the piping and the vessel may be tested together. However, if the vessel has different maximum operating conditions, then it must be isolated and tested separately.
5. Examination for leakage shall be made at all joints and connections. The piping system shall show no visual evidence of weeping or leaking. Any visible leakage shall be corrected at the Contractor's sole expense.
6. If the pressure falls after the pressurizing system is shut off, the source of pressure loss must be determined and corrected.

E. Testing Media Requirements:
1. Clean, fresh city water shall be used for hydrostatic testing.
2. After hydrostatic testing, all water shall be drained immediately. Care shall be taken not to pull a vacuum during draining--open all vents.

F. Test Repairs:
1. Materials such as gaskets, bolting, etc., damaged during tests and flushing shall be replaced.
2. New gaskets shall be used each time a flanged joint is made up.
3. Any welded joint that is defective shall be repaired in accordance with the applicable requirements. Repaired components shall be reexamined by the original method to determine freedom from defects, and all repaired joints shall be retested. Costs for such repair shall be the responsibility of the Contractor.

G. Test Records:
1. Records shall be made by the Contractor for each piping installation. These records shall include at a minimum the following items:
   a. Date of test.
   b. Description and identification of piping tested.
   c. Test fluid.
   d. Test pressure.
   e. Test duration.
   f. Remarks, to include such items as:
      1) Leaks (type, location).
      2) Repairs made on leaks.
   g. Signature and date of person witnessing the test.
   h. Certification by Contractor and reviewed by the Owner.

3.7 ACCEPTANCE

A. The Owner reserves the right to have any section of the piping system, which he suspects may be faulty, cut out of the system by the Contractor for inspection and testing. Should the joint prove to be sound, the Owner will reimburse the Contractor on a time and material basis. Should the joint prove to be faulty, the destructive test will continue joint-by-joint until sound joints are found. Costs for replacement of faulty work and materials shall be the responsibility of the Contractor.

3.8 POTABLE WATER SYSTEM STERILIZATION

A. General

1. Contractor shall use this Specification to sterilize all potable water systems prior to being placed in service.
2. Pipelines intended to carry potable water shall be sterilized before being placed in service. Sterilizing procedures shall conform to AWWA C601 as hereinafter modified or expanded.
3. Before sterilizing, flush all foreign matter from the pipeline. Provide hoses, temporary pipes, ditches, etc., as required, to dispose of flushing water without damage to adjacent properties. Flushing velocities shall be at least 2.5 fps. For large diameter pipe and tanks that are impractical or impossible to flush at 2.5 fps velocity, clean in place from the inside by brushing and sweeping, then flush at a lower velocity.

B. Sterilizing Mixture

1. Sterilizing mixture shall be a chlorine-water solution having a free chlorine residual of 40 to 50 ppm. The sterilizing mixture shall be prepared by injecting: (1) a liquid chlorine gas-water mixture or (2) a calcium or sodium hypochlorite and water mixture into the pipeline at a measured rate while fresh water is allowed to flow through the pipeline at a measured rate so that the combined mixture of fresh water and chlorine solution or gas is of the specified strength.
2. The liquid chlorine gas-water mixture shall be applied by means of an approved solution feed chlorinating device and must provide means of preventing the backflow of water into the chlorine cylinder.
3. If the calcium hypochlorite procedure is used, first mix the dry powder with water to make a thick paste, then thin to approximately a one percent solution (10,000 ppm chlorine). If the sodium hypochlorite procedure is used, dilute the liquid with water to obtain a 1 percent solution.

C. Point of Application

1. Point of Application: Inject the chlorine mixture into the pipeline to be treated at the beginning of the line through a suitable tap in the top of the pipeline. Water from the existing system or other approved source shall be controlled so as to flow slowly into the newly installed piping during the application of chlorine. The rate of chlorine mixture flow shall be in such proportion to the rate of water entering the pipe that the combined mixture shall contain 40 to 50 ppm of free available chlorine. Valves shall be manipulated so that the strong chlorine solution in the line being treated will not flow back into the line supplying the water. Use check valves if necessary.
2. Retention Period:
   a. Treated water shall be retained in the pipeline long enough to destroy all nonspore-forming bacteria. With proper flushing and the specified solution strength, 24 hours is adequate. At the end of the retention period, the sterilizing mixture shall have a strength of at least 10 ppm of chlorine.
   b. Operate all valves, hydrants, and other appurtenances during sterilization to assure that the sterilizing mixture is dispersed into all parts of the line, including dead ends, new services, and similar areas that otherwise may not receive the sterilizing solution.
   c. Do not place concentrated quantities of commercial sterilizers in the line before it is filled with water.
   d. After chlorination, flush the water from the permanent source of supply until the water through the line is equal chemically and bacteriologically to the permanent source of supply.
3. Disposal of Sterilizing Water: Dispose of sterilizing water in sanitary waste. Do not allow sterilizing water to flow into a waterway or storm drainage system.

LINE CLASS DESIGNATION

First Letter		Second Letter		Third Letter		Optional Fourth Letter	
Symbol	Pipe Material	Symbol	Material Rated Pressure (psig)	Sym bol	Joint or Service	Sym bol	Service
A	A-53F/A-53B blk, steel	A	Atm	A	Welded	A	
B	A-53F galv/A-53B blk, 2-1/2 F1g steel	B	50	B	Threaded	B	
C	A-53F galv/A-53B blk, 5 F1g steel	C	100	C	Soldered	C	
D	A-106B Sch 40/A-53B, steel	D	125	D	Brazed	D	Double containment
E	A-106B Sch 80/A-53B, steel	E	150	E	Compression	E	
F	A-106B/A-53B all Sch 80, steel	F	300	F	Hub	F	
G	A-333, steel	G	600	G	Fuseal	G	
H	A-199, 1-1/4 Cr, 1/2 Mo, steel	H	900	H	Solvent cement	H	Caustic
I	Copper	I	15	I	Seal weld	I	Acid
J	304L, stainless	J	175	J	Jacketed	J	
K	316L, stainless	K	6000	K	No copper	K	Split Fitting
L	FRP			L	Blowdown	L	Clear PVC
M	Polyethylene			M	Flanged	M	
N	Polypropylene			N	Coaxial	N	Coaxial
O	PVC, Sch 40			O	FM approved	O	
P	PVC, Sch 80			P	Grooved End	P	
Q	CPVC			Q	Sanitary	Q	
R	PVDF			R	UL approved	R	
S	TFE lined			S		S	Steam
T	FEP lined			T		T	Passivated Cleaned, welds ground
U	PVDF lined			U	Containment	U	
V	Ductile iron			V	No hub	V	Natural Gas
W	Cryogenic			W	Fusion welded	W	Extra Corrosion Allowance
X	Polypropylene lined			X	Orbital Weld	X	FRP Reinforced
Y	Saran Lined			Y	Shrinkable sleeve	Y	
Z	A-106B Sch 80			Z	Tubing		
1	Polybutylene						
2	ABS						
3	Cast iron						
4	Carbon steel tubing						
5	Clay						
6	Rubber hose						
7	Concrete						
8	304						
9	PFA						

END OF SECTION

Technical Specification

Section 15061

Carbon Steel Piping Systems

SECTION 15061
CARBON STEEL PIPING SYSTEMS

PART 1 -- GENERAL

1.1 WORK INCLUDED

A. This Section specifies the requirements for materials, fabrication and installation of carbon steel piping systems.

1.2 RELATED WORK

A. This Section shall be used in conjunction with the following other specifications and related Contract Documents to establish the total requirements for the carbon steel piping systems:

1. Section 15000 – General Installation Requirements.
Section 15060 - Pipe and Pipe Fittings General.
2. The individual pipe class specification sheets included at the end of this Section.
   a. ADA/ADB
   b. ADAV/ADBV
3. The individual pipe class specification sheets included at the end of this Section.

CAUTION! Use of this Section without including all of the above listed items will result in omission of basic requirements.

B. In the event of conflict regarding carbon steel piping system requirements between this Section and any other section, the provisions of this Section shall govern.

PART 2 -- PRODUCTS

2.1 GENERAL

A. Material requirements are specified in the pipe class specification sheets provided at the end of this Section.

B. Fabrication metals used for pipe system component fabrications shall be new and previously unused.

C. Special requirements for fabricated pipe and fittings over 24 inches in diameter:
Carbon steel pipe over 24 inches nominal pipe size shall be API-5L, Grade B, 3/8 inch thick, unless otherwise indicated in the pipe class specification sheets at the end of this Section. Pipe shall be fabricated and tested in accordance with the requirements of ASTM A134, API-5L, and the ASTM standards referenced therein. Hydrostatic testing of fabricated spools shall be performed at the pipe mill at a test pressure and duration in accordance to API-5L. Pipe size shown in these documents shall be for nominal outside diameter, unless otherwise noted, and shall conform to the requirements of ANSI B36.10.

2. Carbon steel fittings over 48 inches nominal pipe size shall be fabricated from the same materials as the pipe in accordance with the dimensions shown in AWWA C208. Elbows shall be fabricated in accordance with the dimensions shown in the following tables contained in AWWA C208: 15 to 29 degree elbows, two pieces, Table 2A, 30 to 44 degree elbows, three pieces, Table 2B, 45 to 59 degree elbows, four pieces, Table 2C, 60 to 90 degree elbows, five pieces, Table 2D. Elbow wall thicknesses shall be increased over that of the pipe in accordance with the equation shown in the cautionary statement below Figure 2 of AWWA C208. Tees and branch fittings shall be reinforced with crotch plates, collars, or wrappers where indicated on the Drawings. A working pressure of 125 psi shall be used in all pipe fabrication calculations. Fitting wall thicknesses shall never be less than the pipe wall thickness.

D. Flanges over 26 inches shall be forged steel, fabricated in accordance with ASTM B16.47, faced and drilled 125-pound flat face.

PART 3 -- EXECUTION

3.1 WELDING

Welding shall be in accordance with Section 15000.

TESTING

A. Hydrostatic/pneumatic tests shall be in accordance with Section 15060.

3.2 PIPE ASSEMBLY AND WELDING QUALITY CONTROL PROCEDURES

A. Pipe Assembly and Erection Inspection:

1. The Contractor shall perform a random inspection of the preparation, alignment, bolting, and welding of pipe joints for conformance with ASME B31.3 Article 335 and manufacturer's recommendations.

2. Post installation Cleaning and Flushing Of Piping System: The Contractor shall verify that the cleaning and flushing operations are performed and accepted in accordance with procedures specified.

3. Piping Systems Test Inspections: Prior to hydrostatic/pneumatic tests, the Contractor will develop the pressure test data sheet per the requirements of the applicable specification section. The Contractor will review the specification sections and pressure test data sheet and verify that the applicable procedural requirements have been satisfied.

SECTION 15061
CARBON STEEL PIPING SYSTEMS
PIPE CLASS SPECIFICATION SHEET

Pipe Class	ADA	For over 2 inches
	ADB	For 2 inches and under
Services	CHWR	CHILLED WATER RETURN
	CHWS	CHILLED WATER SUPPLY
	PW	PROCESS WATER

Rating Pressure 125 psi at 100 degrees F

Codes ANSI B31.3

Pipe

Aboveground: 2-inches and under: A53F, CW, or A106 Gr. B, seamless, standard weight.

2 1/2 inches through 26 inches; A53, Gr. B, black, standard weight.

30 inches through 66 inches (OD pipe sizes); API-5L, Grade B, 3/8-inch wall thickness.

Fittings 2-inches and under: Forged steel, 2000 psi socket weld, A-105
Over 2-inches: Butt weld A-234

PIPE CLASS SPECIFICATION SHEET

Pipe class ADAV - For over 2 inches
ADBV - For 2 inches and under

Services NG Natural Gas

Rating Pressure 125 psi at minus 20 degrees F/150 degrees F

Codes ANSI B31.2

Pipe

Above ground: 4-inches and under: A53F, black, Schedule 40, plain end.

5-inches and over: A53B, black, standard weight, plain end.

Below ground: All size - A53B black, schedule 40, plain end, externally coated with xxion-bonded epoxy.

Fittings 2-inches and under: Forged steel, 2000 psi socket weld, A-105
Over 2-inches: Butt weld A-234

Technical Specification

Section 15066

Cast Iron
Piping systems

PART 1 -- **GENERAL**

1.1 WORK INCLUDED

A. This Section specifies the requirements necessary for materials, fabrication and installation of cast iron piping systems.

1.2 RELATED WORK

A. This Section shall be used in conjunction with the following other specifications and related Contract Documents to establish the total requirements for cast iron piping systems:

1. Section 15060 - Pipe and Pipe Fittings-General.
2. The individual pipe class specification sheets included at the end of this Section.
   a. 3AV.

CAUTION! Use of this Section without including all of the above-listed items will result in omission of basic requirements.

B. In the event of conflict regarding cast iron piping system requirements between this Section and any other section, the provisions of this Section shall govern.

PART 2 -- **PRODUCTS**

2.1 GENERAL

A. Material requirements concerning the pipe and fittings are specified in the Pipe Class Specification Sheets provided at the end of this Section.

PART 3 -- **EXECUTION**

3.1 PIPING INSTALLATION

A. Buried Piping: Trenching preparation, removal of water, and backfilling and compacting of trench for buried piping shall be as specified in the UPC.

B. Piping Assembly:

1. The piping shall be assembled in accordance with the pipe manufacturer's recommendations and as described hereinafter.
2. Installation Instructions:
   a. Hub and Spigot: Separate the neoprene sleeve from the shield. Slide shield over spigot to be joined, then position neoprene sleeve over spigot. Firmly push spigots together inside sleeve until both are seated against molded cushion. Position shield over sleeve. Tighten screw clamps alternately until all are tight. Provide a permanent external compression seal by tightening them to the pipe manufacturer's recommended torque.
   b. No Hub Fittings: Where the use of no hub fittings is not prevented by the presence of expansive (clay) soils, clean the ends of the fittings of all dirt, mud, and foreign matter by washing with water and scrubbing with a wire brush, after which slip the neoprene sealing sleeve into place. Adjust the steel shield, screw housing, and clamp assembly per the manufacturer's installation instructions.
3. Coordinate with affected trades the routing of drains through steel reinforcement, previously disturbed soils, and other underground utilities.

END OF SECTION

PIPE CLASS SPECIFICATION SHEET

Pipe class	3AV	
Services	OD	ROOF OVERFLOW DRAIN
	RD	ROOF DRAIN
	V	VENT, SANITART
	SAN	DRAIN, SANITARY
	SS	STORM SEWER
Rating	Pressure of 10-ft water at ambient temperature.	
Codes	CISPI 302 and Uniform Plumbing Code, 1988	
Pipe	10-inch and smaller cast iron soil pipe, service weight, with no hub ends. All cast iron soil pipe and fittings shall be bituminous-coated inside and out, and shall bear the manufacturer's name or trademark and the Cast Iron Soil Pipe Institute symbol.	

Technical Specification

Section 15069

Stainless Steel Tubing Piping systems

PART 1 GENERAL

1.1 WORK INCLUDED

A. This Section specifies the requirements for materials, cleaning, testing, fabrication, and installation of 316L stainless steel tubing systems.

1.2 RELATED WORK

A. This Section shall be used in conjunction with the following other Specifications and related Contract Documents to establish the total requirements for the referenced stainless steel tubing systems.

1. Section 15060, Pipe and Pipe Fittings - General.
2. The individual pipe class specification sheets included at the end of this Section.
   a. KEZ.

CAUTION! Use of this section without including all of the above listed items will result in omission of basic requirements.

B. In the event of conflict regarding 316L stainless steel tubing system requirements between this Section and any other section, the provisions of this Section shall govern.

PART 2 -- PRODUCTS

2.1 TUBING

A. All components shall be in standard U.S. inches or fractional parts thereof (outside diameter: 1/8, ¼, 3/8,.1/2, ¾, 1, 1 ½, 2, 3, 4, and 6).

B. All tubing ends shall be faced and squared to plus or minus ½ degree or 0.010 inch, whichever is less, and shall be suitable for installation with automatic autogenous orbital welding equipment.

C. Maximum tube length shall be 20 feet nominal, 18.5 feet minimum.

D. The mill stamping shall be removed.

E. All tubes shall be marked using vibratory or electroetch process. The location for marking the tube shall be within 2 feet from each end of the finished tube. Etching shall not damage the internal surface or degrade the tube pressure rating. Label to indicate the mill heat number and lot number from which the manufacturer, size, wall thickness, and alloy can be traced.

F. Tube Raw Material Requirements:

1. All tube shall be produced from ASTM Grade TP 316L (UNS S31603) raw material. Tubing sized smaller than ½ inch shall be seamless; ½ inch and larger may be seamless or welded.
2. Tubing shall be bright annealed at the producing mill in a dry hydrogen atmosphere (dew point $\leq$ 40 degrees Celsius) or vacuum annealed (10 micron HG) to a Rockwell 90 Rb maximum hardness.
3. Elemental sulfur content shall be in the range of 0.005 to 0.012 percent for seamless material and 0.005 to 0.017 percent for welded material.

G. Interior surface finish shall have a minimum 180-grit finish.

2.2 FITTINGS AND COMPONENTS

A. All fittings and components shall be equal in all respects to tubing specified above. This includes, but is not limited to, quality, properties, cleanliness, packaging, shipping, inspection, and quality assurance.

B. Tees shall be fabricated by the drawn or pulled tee method. Alternatively, tees may be fabricated using milling equipment to notch or drill the joining parts. The branch shall be welded to the main tee body using TIG welding method. Welds shall be flush and contain no pits or crevices. A smooth radii shall be present at the connection on both the ID and OD surfaces after final finishing. No undercutting of the external weld bead shall be allowed. Concavity of the external weld bead in excess of 10 percent of the wall thickness is not permitted. Wall thickness variations from the nominal value shall not exceed plus or minus 10 percent.

C. Linear dimensions of fittings shall be maintained to within plus or minus 1/16 inch of manufacturer's catalog data. Angular dimensions between the legs of fittings shall be within plus or minus 0.5 degree of catalog dimensions.

PART 3 -- EXECUTION

3.1 GENERAL

A. Use only tools and handling techniques which will not mar, disturb the shape, or in any way reduce the quality of the materials used.

B. Threaded connections are not permitted except where specifically shown on Drawings. All connections shall be via automated orbital welding or approved mechanical fittings.

C. All work shall be done in a competent manner, using the best manufacturing practice and latest techniques of the trade.

3.2 INSTALLATION

A. Tube Cutting and Bending:

1. If cutting is required, visually examine each length of tube to be cut for obvious defects, such as contaminants, bends, cracks, and material defects.
2. When a section of tubing is to be cut from a length, it shall be cleaned with a nonabrasive cloth sufficient for a joint area on each side of the intended cutoff joint, and the surface wiped clean with lint-free cloth before cutting with a clean cutter wheel.
3. Pipe tube, fittings, and cutting tools shall be maintained clean (the cutting tools for other piping systems shall be kept separate from the cleaned-for-oxygen service 316L stainless steel tools).
4. Tube shall be cut with ends square and true to size using sharp wheel cutters followed by facing. All burrs shall be removed.
5. Tubes ½ inch and smaller (unless specifically noted) may be bent in the field to accommodate changes in direction. Bends shall be made using an approved tool designed to impart a bend radius as stated below.

6. The following table may be used as a guideline for field bends. Values shown are multiples of tubing diameter:

All Changes in Direction	
Size	Bend
1/4” 10.0X	All feasible bends and offsets
3/8” 7.5X	All bends and offsets
1/2” 5X	All bends and offsets

Exception: Where the above bending criteria cannot accommodate field conditions, a welded elbow shall be used to make changes in direction.

7. Use a Contractor approved cutting machine for 1 inch and larger size tube.

8. For all sizes ¾ inc. and smaller, use a Tri-Tool wheel cutter with lathe-type facing tool. Maintain a sharp cutting wheel.

C. Welding:

1. Welding shall be by the tungsten inert gas (TIG) arc welding process with argon shielding and inside tubing purge. All stainless steel tube shall be joined using an automatic, orbital butt-welding machine. Weld programs shall be designed such that the electrode travel shall not exceed one and three-eighths (1 3/8) revolutions, including the downslide

END OF SECTION

SECTION 15069
STAINLESS STEEL TUBING SYSTEMS
PIPE CLASS SPECIFICATION SHEET

Pipe class	KEZ	
Services	BA	BREATHING AIR
	IA	INSTRUMENT AIR
	N2	UTILITY NITROGEN
	SA	SERVICE AIR
Codes	ANSI B31.3	
Tubing	316L service, ASTM A269, seamless for diameters smaller than ½-inch; seamless or welded seam for diameters ½-inch and larger	

Tube Size	Wall Thickness
¼” and 3/8” ODS	0.035”
½” ODS	0.049”
¾” through 3” ODS	0.065”
4” ODS	0.083”
6” ODS	0.109”

Technical Specification

Section 15070

Stainless Steel Piping Systems

PART 1 -- GENERAL

1.1 WORK INCLUDED

A. This Section specifies the requirements for purchase and installation of the stainless steel piping systems.

1.2 RELATED WORK

A. This Section shall be used in conjunction with the following other specifications and related Contract Documents to establish the total requirements for the stainless steel piping systems.
   1. Section 15060, Pipe and Pipe Fittings - General.
   2. The individual pipe class specification sheets included at the end of this Section.
      a. KEA.
      b. JEA.

CAUTION! Use of this Section without including all of the above listed items will result in omission of basic requirements.

B. In the event of conflict regarding stainless steel piping system requirements between this Section and any other section, the provisions of this Section shall govern.

PART 2 -- PRODUCTS

2.1 GENERAL

A. Material requirements are specified in the Pipe Class Specification Sheets included at the end of this Section.

PART 3 -- EXECUTION

3.1 WELDERS AND WELDING OPERATORS

A. Welders and welding operators shall be qualified at the Contractor's expense by an approved testing laboratory before performing any welding. Qualification tests shall be in accordance with Section IX of the ASME Code.

B. Prior to the start of the work, Contractor shall submit a list of the welders he proposes using and the type of welding for which each has been qualified. Copy of certification shall be submitted for each welder. Qualification tests may be waived if evidence of prior qualification is deemed suitable by the Construction Manager.

3.2 FILLER MATERIALS

A. The deposited weld metal shall have essentially the same alloy content as the metal being joined and be of essentially the same tensile strength.

B. Store welding rods in a warm dry area in accordance with the manufacturer's recommendations.

3.3 BACKING RINGS AND INSERTS

A. Backing strips or rings shall not be used except with specific prior review by the Construction Manager as to use, material, and design. Root gap inserts that are

completely melted and consumed in the weld bead are acceptable only when reviewed in advance by the Construction Manager.

3.4 JOINT PREPARATION AND ALIGNMENT

A. Weld bevels shall be suitable for the welding process used and the contour shall permit complete fusion throughout the joint. Bevels shall conform to those used in the procedure qualification; however, when not specified, they shall be in accordance with the requirements of ANSI B31.3. Pipe having a nominal thickness less than 3/16 inch may have a slight chamfer or may be square depending upon the fabricator's preference.

B. Weld bevels shall be made by machining, grinding, or thermal cutting, and the surfaces shall be reasonably smooth and true.

C. Adjacent sections of welded pipe that are joined by butt welding shall have the longitudinal weld seams positioned so they do not match (minimum 30 degrees apart).

D. Wherever possible, the position of the longitudinal weld seam shall be such that branch connections (couplings, stubs, etc.) do not fall on the seam.

E. Where the ends of piping components are to be joined by welding and the internal surface misalignment exceeds 1/16 inch, that component, with the wall extending internally, shall be internally trimmed (see Figure 327.3.IB of ANSI B31.3) so that the adjoining internal surfaces are flush. However, the resulting thickness of the welded joint shall not be less than the minimum design thickness plus any corrosion allowance.

F. Materials that require preheating for welding shall be preheated at the same temperature for thermal cutting or gouging.

G. All surfaces to be welded shall be clean and free from paint, oil, dirt, scale, and other materials detrimental to welding. Prior to welding, wire brush joints to be welded with stainless steel wire brushes or stainless steel wool.

H. Fit-up shall be made by tack welding or using lugs.

I. Tack welds shall be made by a qualified welder under a qualified welding procedure. Tack welds that are part of the root pass shall be made with the same electrodes as are to be used for the first pass. Tack welds that have cracked shall be removed by grinding.

J. The clear distance between centerlines of adjacent girth butt welds shall not be less than four times the pipe wall thickness, or 1 inch, whichever is greater.

K. End connections of shop fabricated spool pieces shall be provided as follows. Any exception to the following will be indicated on the piping drawing and approved by the Construction Manager prior to fabrication.

1. Where field welding is required to join the ends of two pieces of fabricated pipe, or a piece of pipe and a welding fitting or flange, the shop fabricator shall furnish both adjacent ends beveled for field welding and fabricated to the Drawing dimensions.

2. Where field welds occur at stub-ins to a field fabricated straight-run, the shop fabricator shall furnish the spool end contoured and ready for welding. Should a reinforcement fitting (i.e., weldolet) be required, it shall be included in the shop spool.

3.5 WELDING PROCESS

A. All welds shall be made by the direct current, reverse polarity, inert gas tungsten arc (TIG) process or the direct current, straight polarity, inert gas metal arc process (MIG-Metal Inert Gas). Shop welding and fabrication shall be made in accordance with the submitted welding procedure qualifications, as reviewed by the Construction Manager.

B. No welding shall be performed if there is impingement of rain, snow, sleet, or high wind in the work area, or if the ambient temperature is below 32 degrees F. If the ambient temperature is less than 32 degrees F, local preheating of the surfaces to a temperature warm to the hand is required.

3.6 WELD CONTOUR AND FINISH

A. Welding requirements shall be as follows:
1. All longitudinal welds shall have 100 percent penetration to the root of the joint.
2. Penetration requirements of girth butt welds shall be within the acceptable limits specific in paragraph 327.4.2 of ANSI B31.3.
3. Any defects found shall be removed, repaired by welding, and the area reexamined.

PIPE CLASS SPECIFICATION SHEET

Pipe class	KEA/JEA	
Services	IA	INSTRUMENT AIR
	SA	SERVICE AIR
Rating	Pressure 150 psi at 150 degrees F	
Codes	ANSI B31.3	
Pipe	2 1/2 to 16 inches stainless, ASTM A312, Gr TP 316L, welded, Schedule 10 2 inches and under stainless, ASTM A312, Gr TP 316L, welded, Schedule 40	

Technical Specification

Section 15075

Copper Piping systems

PART 1 -- GENERAL

1.1 WORK INCLUDED

A. This Section specifies the requirements for materials, fabrication and installation of copper piping systems.

1.2 RELATED WORK

A. This Section shall be used in conjunction with the following other specifications and related Contract Documents to establish the total requirements for copper piping systems.
1. Section 15060 - Pipe and Pipe Fittings - General.
2. The individual pipe class specification sheets included at the end of this Section.
a. IDC.

CAUTION! Use of this Section without including all of the above-listed sections will result in omission of basic requirements.

B. In the event of conflict regarding copper piping system (excluding high purity) requirements between this Section and any other section, the provisions of this Section shall govern.

PART 2 -- PRODUCTS

2.1 GENERAL

A. Material requirements concerning the tubing, fittings, flanges, unions, solder, thread dope and gaskets are specified in the Pipe Class Specification Sheets provided at the end of this Section.

B. Copper and copper alloy pipe, tubing and fittings shall be stored, separated by types in an indoor storage area provided by the Contractor.

PART 3 -- EXECUTION

3.1 TOOLS

A. Flat-faced wrenches and vises are to be used for copper systems. Pipe wrenches and vises with toothed jaws will damage copper materials and shall not be used.

3.2 TUBING PREPARATION

A. Cut tubing square and remove burrs. Clean both inside of fittings and outside of tubing with Scotchbrite pads and flux before sweating. Take care to prevent annealing of fittings and hard-drawn tubing when making connections.

B. Bends in soft temper tubing shall be long sweep, wherever possible. Bends shall be shaped with bending tools and shall be made without appreciable flattening, buckling, or thinning of the tube wall at any point.

3.3 BRAZING QUALIFICATION

A. The qualification of brazing procedures, brazers, and brazing operators shall be in accordance with the requirements of Section IX of the ASME Code.

3.4 VALVE INSTALLATION

A. Prior to brazing of valves, Teflon and elastomer seats and seals shall be removed to prevent damage.

3.5 INSTALLATION OF INSTRUMENT AIR TUBING

A. All instrument air supply lines shall be minimum 3/8 inch nominal unless otherwise shown. All instrument air control lines shall be 1/4 inch nominal.
B. Care shall be taken to keep tubing and conduit runs away, from hot pipes, and under no circumstances shall they be less than 12 inches from any such pipe.
C. Individual pipe, tubing runs, and instrument capillary tubing shall be continuously supported in channels, trays, conduits, or from structures so that mechanical damage will not occur, and shall be clamped in place. Tubing trays and channels shall be located in such a manner that they will not catch spillage, overflow, or dirt from above.

PIPE CLASS SPECIFICATION SHEET

Pipe class	IDC	
Services	CD	CONDENSATE DRAIN
	CW	CITY WATER, POTABLE
	D	INDIRECT DRAIN
	IA	INSTRUMENT AIR
	N2	NITROGEN
	PW	PROCESS WATER
	SA	SERVICE AIR
Rating	Pressure 125 psig at 180 degrees F	
Codes	ANSI B31.3	
Pipe	Above ground; copper, smls, Type L, hard drawn, B-88 Below ground; copper, smls, Type K, hard drawn, B-88	

Technical Specification

Section 15090

PVC & CPVC Piping systems

PART 1 -- GENERAL

1.1 WORK INCLUDED

A. This Section specifies the requirements for materials, fabrication and installation of PVC and CPVC piping systems.

1.2 RELATED WORK

A. This Section shall be used in conjunction with the following other specifications and related Contract Documents to establish the total requirements for PVC and CPVC piping systems.
1. Section 15060 - Pipe and Pipe Fittings - General.
2. The individual pipe class specification sheets included at the end of this Section.
a. PCH

CAUTION! Use of this Section without including all of the above listed items will result in omission of basic requirements.

B. In the event of conflict regarding requirements for PVC and CPVC piping systems between this Section and any other section, the provisions of this Section shall govern.

1.3 REFERENCES

A. American Society of Mechanical Engineers

1. ASME B31.3, Chemical Plant and Petroleum Refinery Piping.

B. American Society for Testing Materials

1. ASTM A 193, Alloy-steel and Stainless Steel Bolting Materials for High-Temperature Service.

2. ASTM A 194, Carbon and Alloy Steel Nuts for Bolts for High-Pressure and High-Temperature Service.

3. ASTM A 307, Carbon Steel Externally Threaded Standard Fasteners.

4. ASTM A 563-83, Carbon and Alloy Steel Nuts.

5. ASTM D 1785, Poly(Vinyl Chloride)(PVC) Plastic Pipe, Schedules 40, 80, and 120.

6. ASTM D 2464, Threaded Poly(Vinyl Chloride) (PVC) Plastic Pipe Fittings, Schedule 80.

PART 2 -- PRODUCTS

2. 1 GENERAL

A. Material requirements are specified in the Pipe Class Specification Sheets provided at the end of this section.

B. All pipe, fittings, valves, and materials shall be stored in an indoor location with an ambient temperature of between 40 and 90 degrees F. Pipe, fittings, and valves shall be stored and handled in such a manner as to prevent damage and/or contamination. Any materials that become damaged must be replaced with new, clean material.

2.2 MATERIALS AND MANUFACTURERS

A. All primer and solvent cement shall be obtained from the same manufacturer.

B. In the event the following procedures vary from those of the materials manufacturer, the manufacturer's procedure shall govern. The Construction Manager shall be notified in writing of any such variance.

C. Primer to be clear except for sanitary waste lines and underground lines.

2.3 CEMENT, SOLVENT

A. All socket connections shall be joined with solvent cement conforming to ASTM D2564. Manufacturer and viscosity shall be as recommended by the pipe and fitting manufacturer to assure compatibility.

PART 3 -- EXECUTION

3. 1 GENERAL

A. All rigid PVC pipe shall be cut, made up, and installed in an indoor location and in accordance with the pipe manufacturer's recommendations.

B. Schedule 40 pipe shall not be threaded. Use schedule 80 threaded nipples where necessary to connect to threaded valve or fitting.

C. Only strap wrenches shall be used for tightening threaded plastic joints, and care shall be taken not to overtighten these fittings.

D. Provide adequate ventilation when working with pipe joint solvent cement.

E. PVC pipe shall not be installed unless insulated or otherwise completely shielded.

F. Follow manufacturer's recommendations for priming and solvent cement application.

G. No back welding to seal joints is allowed.

3.2 EXCESS CEMENT

A. Immediately after joining, wipe off all excess cement from the circumference of the pipe and fitting.

3.3 JOINT INTEGRITY

A. The cementing and joining shall not be done when the ambient temperature is below 40 degrees F or above 90 degrees F and piping shall not be exposed to direct sunlight either in storage or after installation.

B. Solvent welding shall be done in a clean, covered, indoor area.

C. If ambient temperature is below 40 degrees F, joints must be prefabricated in a heated space, or a temporary heated enclosure must be provided during entire joining period and for two hours after joint is made up. All materials must be stored in heated area.

3.4 HANDLING

A. Joints and adjacent piping shall not be moved after joining for the periods of time specified in Table 1.

Table 1
SURFACE TEMPERATURES

Pipe Size (inches)	Hot Weather 90-150 Deg F	Mild Weather 50-90 Deg F	Cold Weather 10-50 Deg F
1/2 to 1 1/4	12 min	20 min	30 min
1 1/2 to 2 1/2	30 min	45 min	1 hr
3 to 4	45 min	1 hr	1 1/2 hrs
6 to 8	1 hr	1 1/2 hrs	2 1/2 hrs
10 to 12	2 hrs	3 hrs	5hrs

B. Unless approved by Project Manager, test pressure shall not be applied after joining for the minimum times specified in Table 2.

Table 2
SURFACE TEMPERATURES

Pipe Size (inches)	Hot Weather 90-150 Deg F	Mild Weather 50-90 Deg F	Cold Weather 10-50 Deg F
1/2 to 1 1/4	4 hrs	5 hrs	7 hrs
1 1/2 to 2 1/2	6 hrs	8 hrs	10 hrs
3 to 4	8 hrs	18 hrs	24 hrs
6 to 8	12 hrs	24 hrs	48 hrs
10 to 12	18 hrs	36 hrs	72 hrs

3.5 SUPPORTS AND HANGERS

A. Spacing for PVC piping system supports shall not exceed the values in Table 3.

Table 3

MINIMUM SUPPORT SPACING FOR
PVC PIPE INSTALLATIONS
(in feet)
(Based on Pipe Full of Liquid with Specific Gravity of 1.0)

Schedule 40
Operating Temperature (Degree F)

Size	60	80	100	120	140
1 inch	5.5	5	4.5	3	2.5
1 1/2	6	5.5	5	3.5	3
2	6	5.5	5	3.5	3
3	7	7	6	4	3.5
4	7.5	7	6.5	4.5	4
6	8.5	8	7.5	5	4.5
8	9	8.5	8	5	4.5
10	10	9	8.5	5	5
12	11.5	10.5	9.5	6.5	5.5

Schedule 80
Operating Temperature (Degree F)

Size	60	80	100	120	140	160
1 inch	6	5.5	3.5	3	3	2.5
1 1/2	6.5	6.5	5.5	3.5	3.5	3
2	7	6.5	6	4	3.5	3
3	8	7.5	7	4.5	4	4
4	9	8.5	7.5	5	4.5	4
6	10	9.5	9	6	5	4.5
8	11	10.5	9.5	6.5	5.5	5
10	11.5	11	10.5	9.5	8	--
12	12.5	12	11.5	11.5	10.5	--

Specific Gravity Correction Factor

S.G.	1	1.1	1.2	1.4	1.6	2	2.5
C.F.	1	0.98	0.96	0.93	0.9	0.85	0.8

B. Spacing for CPVC piping system supports shall not exceed the values given in Table 4.

Table 4
RECOMMENDED SUPPORT SPACING FOR
CPVC PIPE INSTALLATIONS
(in feet)
(Based on Pipe Full of Liquid with Specific Gravity of 1.0)

Schedule 80
Operating Temperature, (Degree F)

Size	80	100	120	140	160	180	200
1/2 inch	5	4.75	4.5	4.25	3.66	3.25	2.5
1	5.75	5.5	5.25	4.66	4.33	3.5	2.66
1 1/2	6.5	6.25	5.75	5.25	4.75	4	3.25
2	7.25	6.75	6.33	5.67	5.25	4.25	3.33
3	8.5	8	7.5	6.75	5.67	5	4
4	9.25	8.75	8.25	7.33	6.5	5.33	4.33
6	10	9.33	8.75	7.67	7	6	4.75
8	10.5	10	9.33	8.5	7.75	6.5	5.25

Specific Gravity Correction Factor

S.G.	1	1.1	1.2	1.4	1.6	2	2.5
C.F.	1	0.98	0.96	0.93	0.9	0.85	0.8

C. The data in Tables 2, 3, and 4 is for uninsulated lines. For insulated lines, reduce spans to 70 percent of the tabulated value. Use continuous support for spans of less that 2.5 feet.

PIPE CLASS SPECIFICATION SHEET

Pipe class	PCH	
Services	H_2SO_4	SULFURIC ACID
	NaOH	SODIUM HYDROXIDE
	V	VENT, ATMOSPHERIC
Rating	100 psi at 100 degree F through 12 inches	
Codes	ANSI B31.3	
Pipe	Schedule 80 PVC, D1785 Type I, Grade I, Normal Impact	

Technical Specification

Section 15091

PVDF & Double Contained Piping systems

PART 1 -- **GENERAL**

1.1 WORK INCLUDED

A. This Section specifies the requirements necessary for materials, fabrication, and installation of the liquid waste PVDF & double contained piping systems.

1.2 RELATED WORK

A. This Section shall be used in conjunction with the following other specifications and related Contract Documents to establish the total requirements for PVDF and double contained piping systems:

1. Section 15060 - Pipe and Pipe Fittings-General.
2. The individual pipe class specification sheets included at the end of this Section.
   a. REW
   b. REWD

CAUTION! Use of this Section without including all of the above-listed items will result in omission of basic requirements.

B. In the event of conflict regarding PVDF and double contained piping system requirements between this Section and any other section, the provisions of this Section shall govern.

PART 2 -- **PRODUCTS**

2.1 PVDF PIPING SYSTEMS

A. Material requirements concerning the pipe and fittings are specified in the Pipe Class Specification Sheets provided at the end of this Section.

B. Manufacturer
1. Guardian Systems
2. George Fisher, Inc.
3. Asahi/America
4. Approved equal

2.2 DOUBLE CONTAINED PIPING SYSTEMS

A. Material requirements concerning the pipe and fittings are specified in the Pipe Class Specification Sheets provided at the end of this Section.

B. The double containment piping system shall be a pre-fabricated system suitable for the intended service.

C. Each contained piping system shall consist of schedule 80 primary piping system supported within a schedule 80 secondary containment housing. Each system shall be provided with suitable drains and vents and be designed to provide complete drainage of both the primary and secondary containment piping. Interstitial supporting devices shall be provided within the secondary containment pipe, and shall be designed to allow continuous drainage in the annular space to the drain points. Drain fittings shall be designed to allow a valve attachment to be made so that the secondary containment compartment may be readily drained and manually checked for leaks.

D. Manufacturer
1. Guardian Systems
2. George Fisher, Inc.
3. Asahi/America
4. Approved equal

PART 3 -- **EXECUTION**

3.1 PIPING INSTALLATION

A. All installation procedures shall be in accordance with the manufacturer's written instructions.

3.2 CLEANING AND TESTING

A. All testing shall be performed in accordance with the manufacturer's written instructions.

B. Upon completion of installation, the primary piping system shall be pressure tested at 150% of the system design pressure for a period of one hour.

C. The secondary containment piping system shall be pneumatically tested at a minimum duration of 2-1/2 hours

PIPE CLASS SPECIFICATION SHEET

Pipe class	REW	
Services	LW	LIQUID WASTE
Rating	Pressure 150 psi at 100 degrees F	
Pipe	PVDF, Schedule 80, material conforming to ASTM D-3222 and pipe conforming to ASTM D-2837	
Fittings	Carrier:	PVDF fittings conforming to ASTM D-2657.
Joint	Carrier:	Thermal fusion joining method

PIPE CLASS SPECIFICATION SHEET

Pipe class	RCHD	
Services	LW	LIQUID WASTE
Rating	Pressure 150 psi at 100 degrees F	
Pipe	Carrier:	PVDF, Schedule 80, material conforming to ASTM D-3222 and pipe conforming to ASTM D-2837
	Containment:	Polyethylene, Schedule 80, material conforming to ASTM D-1248 and pipe conforming to ASTM D-2837
Fittings	Carrier:	PVDF fittings conforming to ASTM D-2657.
	Containment:	Polyethylene fittings conforming to ASTM F-1055
Joint	Carrier:	Thermal fusion joining method
	Containment:	Thermal fusion joining method

Technical Specification

Section 15092

Polypropylene Piping Systems

PART 1 -- GENERAL

1.1 WORK INCLUDED

A. This Section specifies the requirements for materials, fabrication and installation of polypropylene piping systems.

1.2 RELATED WORK

A. This Section shall be used in conjunction with the following other specifications and related Contract Documents to establish the total requirements for polypropylene piping systems.
1. Section 15060 - Pipe and Pipe Fittings - General.
2. The individual pipe class specification sheets included at the end of this Section.
a. NEW

CAUTION! Use of this Section without including all of the above listed items will result in omission of basic requirements.

B. In the event of conflict regarding requirements for polypropylene piping systems between this Section and any other section, the provisions of this Section shall govern.

PART 2 -- PRODUCTS

2. 1 GENERAL

A. Material requirements are specified in the Pipe Class Specification Sheets provided at the end of this section.

B. All pipe, fittings, valves, and materials shall be stored in an indoor location with an ambient temperature of between 40 and 90 degrees F. Pipe, fittings, and valves shall be stored and handled in such a manner as to prevent damage and/or contamination. Any materials that become damaged must be replaced with new, clean material.

PART 3 -- EXECUTION

3. 1 GENERAL

A. All rigid pipe shall be cut, made up, and installed in an indoor location and in accordance with the pipe manufacturer's recommendations.

PIPE CLASS SPECIFICATION SHEET

Pipe class	NEW	
Services	LR	Reagents
Rating	150 psi at 70 degrees F	
Codes	ANSI B31.3	
Pipe	Polypropylene pipe conforming to ASTM D-Group 1, Class 2	
Fittings	Polypropylene pipe conforming to ASTM D-Group 1, Class 2	
Joints	Socket or butt-fusion type in accordance with ASTM D-2657	

Technical Specification

Section 15101

Manual Valves

PART 1 -- GENERAL

1.1 WORK INCLUDED

A. This Section specifies the requirements necessary to furnish and install the manual valves in the facility's piping systems. This Section excludes the manual valves that are used in high-purity and cleaned-for-oxygen service stainless steel, and PFA and PVDF high-purity systems. These are covered in Section 15102.

1.2 RELATED WORK

A. This Specification shall be used with the following other specifications to form the complete requirements for manual valves.
1. Section 15100 - Valves - General.
2. The Appendix following the end of this Section.

CAUTION! Use of this Section without including all of the above listed items will result in omission of basic requirements.

B. In the event of conflict regarding manual valve requirements between this Section and any other section, the provisions of this Section shall govern.

PART 2 -- PRODUCTS

2.1 GENERAL

A. All valves shall be line size unless indicated otherwise on the Drawings.

B. Valves shall not contain any asbestos packing or gaskets.

C. The valve identification code used is explained in Table 1.

Table 1
VALVE IDENTIFICATION

Valve Designation	Valve Type
BA	Ball
BF	Butterfly
CK	Check
DA	Diaphragm
GA	Gate
GL	Globe
PL	Plug
SP	Special

D. Chain Wheel Operators:
1. When chain wheel operators are specified, they shall be from Babbit Steam Specialty Company.

2. Chain wheel operators shall match the size of the handwheel on the valve.
3. Hammer-blow type operators shall not be mounted on cast iron valves.
4. Chains for the operators shall be the size and type required by the operator. Chains shall be plated and shall extend to within 4 feet of the ground. Where chains hang in normally traveled areas, appropriate "L" type tieback anchors shall be provided.
5. Locations as shown on the Drawings.

E. All valves shall be permanently marked with the following information:
1. Manufacturer's name or unique symbol.
2. Direction of flow.

PART 3 - EXECUTION

3.1 INSTALLATION

A. Generally, unless otherwise indicated on the Drawings, all valves installed in horizontal runs of pipe having centerline elevations 4 feet 6 inches or less above the finish floor shall be installed with their operating stems vertical. Valves installed in horizontal runs of pipe having centerline elevations between 4 feet-6 inches and 6 feet-9 inches above the finish floor shall be installed with their operating stems horizontal. If adjacent piping prohibits this, the stems and operating handwheel shall be installed above the valve horizontal centerline as close to horizontal as possible. Valves installed in vertical runs of pipe shall have their operating stems orientated to facilitate the most practicable operation, as reviewed by the Contractor.

END OF SECTION

VALVE DATA SHEET

Valve tag	BA-4
Function	on/off - low-pressure throttling
Design pressure	1,440 psi at 100 degrees F
Body	Carbon steel
Trim	Carbon steel ball
Seats	TFE/glass
Seals	TFE*
Packing	TFE*
End connection	Socket weld
Body construction	Three piece
Trim construction	NA

Manufacturer	Figure Number	Size Range
Worcester	4444RTSW	1/4” to 2”
Jamesbury	BWS22TT	1/2” to 2”
Whitey	.60 Series	1/4” to 2”

VALVE DATA SHEET

Valve tag	BA-1
Function	On/off - low-pressure throttling
Design pressure	400 psi at 300 degrees F
Body	Bronze
Trim	Bronze ball
Seats	RTFE
Seals	TFE
Packing	TFE
End connection	Threaded
Body construction	Two piece
Trim construction	NA

Manufacturer	Figure Number	Size Range
Apollo	70-lXX	1/4” to 2”
Watts	B-6000	1/2” to 2”

VALVE DATA SHEET

Valve tag	BA-5
Function	On/Off - low-pressure throttling
Design pressure	400 psi at 150 degrees F
Body	Bronze
Trim	Bronze ball
Seats	RTFE
Seals	TFE
Packing	TFE
End connection	Threaded
Body construction	Three piece
Trim construction	NA

Manufacturer	Figure Number	Size Range
Apollo	82-10	1/4” to 2”
Watts	B-6800	1/4” to 2”
Crane	9302	1/411 to 211
McCanna	F602BRRBR	1/411 to 211

VALVE DATA SHEET

Valve tag	BA-6
Function	On/Off - low-pressure throttling
Design pressure	400 psi at Note*
Body	Bronze
Trim	Bronze
Ball	Brass
Seats	RTFE**
Seals	TFE2
Packing	TFE
End connection	Solder
Body construction	Three piece
Trim construction	NA

Manufacturer	Figure Number	Size Range
Apollo	82-20X	1/4” to 2”
Watts	B-6801	1/4” to 2”

VALVE DATA SHEET

Valve tag	BA-10
Function	On/Off
Design pressure	150 psi at 400 degrees F
Body	316 stainless steel
Trim	316 stainless steel
Seats	RTFE
Seals	TFE
Packing	TFE
End connection	Class 150, RF
Body construction	Two piece; lever
Trim construction	N/A

Manufacturer	Figure Number	Size Range
Jamesbury	5150-313636MT	1/2” to 12”
Worcester	51-66RT-150	1/2” to 10”
Crane	KR 951S-FN-H	1/2” to 12”

VALVE DATA SHEET

Valve tag	BA-20
Function	On/Off - low-pressure throttling
Design pressure	125 psi at 100 degrees F, nonshock
Body	CPVC
Trim	CPVC ball
Seats	TFE
Seals	Viton
Packing	Viton
End connection	Socket/thread
Body construction	Double union, 3 piece
Trim construction	NA

Manufacturer	Figure Number	Size Range
Chemtrol	Tru-Bloc, Viton	1/2” to 2”
George Fischer	163.346.31X	1/2” to 2”
Spears	2329 Series	1/2” to 4”

VALVE DATA SHEET

Valve tag	BA-22
Function	on/off - low-pressure throttling
Design pressure	125 psi at 100 degrees F, nonshock
Body	PVC
Trim	PVC ball
Seats	TFE
Seals	Viton
Packing	Viton 0-ring
End connection	Socket/threaded
Body construction	Double union; three piece
Trim construction	NA

Manufacturer	Figure Number	Size Range
Chemtrol	Tru-Bloc, Viton	1/2” to 2”
GF	161.346.31X	3/8” to 2”
Spears	2329 Series	1/2” to 4”

VALVE DATA SHEET

Valve tag	BA-23
Function	On/Off - low-pressure throttling
Design pressure	125 psi at 100 degrees F, nonshock
Body	PVC
Trim	PVC ball
Seats	TFE
Seals	EPDM
Packing	EPDM
End connection	Socket/threaded
Body construction	Double union; three piece
Trim construction	NA

Manufacturer	Figure Number	Size Range
Chemtrol	Tru-Bloc, EPDM	1/2” to 2”
GF	161.346.30X	3/8” to 2”
Spears	2329 Series	1/2” to 4”

VALVE DATA SHEET

Valve tag	BA-24
Function	On/Off, throttling
Design pressure	232 psi at 68 degrees F
Body	PVDF
Trim	??
Seats	PTFE
Seals	FPM
Packing	??
End connection	Fusion Weld
Body construction	??
Trim construction	??

Manufacturer	Figure Number	Size Range
GF	175.346.0XX	3/8” to 2”

VALVE DATA SHEET

Valve tag	BF-1
Function	On/Off - low-pressure throttling
Design pressure	150 psi at 150 degrees F
Body	Cast iron
Trim	Bronze disc
Seats	EPT
Seals	EPT
Packing	None
End connection	NA
Body construction	Wafer-lever
Trim construction	410 stainless steel stem

Manufacturer	Figure Number	Size Range
Demco	21XX - 1214351	2” to 6”
Durco	RS109ELH	2” to 6”
Stockham	LG-511ES3E	2” to 6”

VALVE DATA SHEET

Valve tag	BF-3
Function	On/Off - low-pressure throttling
Design pressure	150 psi at 230 degrees F
Body	Ductile iron
Trim	Bronze disc
Seats	EPT
Seals	EPT
Packing	None
End connection	NA
Body construction	Lug-lever
Trim construction	410 stainless steel stem

Manufacturer	Figure Number	Size Range
Demco	NE-C-XXXXX-5114351	2 1/2” to 6”
Durco	RS519ELH	2 1/2” to 6”
Stockham	LD711BS3E	2 1/2” to 6”
Crane	44 BXZ TL	2 1/2” to 6”

VALVE DATA SHEET

valve tag	BF-4
Function	On/off - low-pressure throttling
Design pressure	150 psi at 150 degrees F
Body	Ductile iron
Trim	Bronze disc
Seats	EPT
Seals	EPT
Packing	None
End connection	Flanged
Body construction	Lug-gear
Trim construction	410 stainless steel stem

Manufacturer	Figure Number	Size Range
Demco	21XX/397X-5114359 with gear operator 2098-2llX4	6” to 20”
Durco	RS519ELR	6” to 24”
Stockham	LD722BS3E	6” to 20”
Crane	44BXZ-G	6” to 36”

VALVE DATA SHEET

Valve tag	BF-10
Function	On/Off
Design pressure	15 psig
Body	Cast iron
Trim	Cast iron disk
Seats	Metal
Seals	Metal to metal
Packing	Graphited Teflon
End connection	Flanged adaptor
Body construction	Wafer
Trim construction	416 stainless steel shaft

Manufacturer	Figure Number	Size Range
Spencer Turbine	VLV-90 Series	4” to 12”

VALVE DATA SHEET

Valve tag	BF-26
Function	On/Off
Design pressure	200 psi
Body	Ductile iron
Trim	Bronze
Seats	EPT
Seals	Natural rubber
Packing	NA
End connection	Grooved end
Body construction	Lug-lever
Trim construction	

Manufacturer	Figure Number	Size Range
Kennedy	GLBF7611	4” to 6”
Victaulic	700 Series	4” to 6”
Gruvlok-Grinnell	GN-7721-3	2” to 6”

VALVE DATA SHEET

Valve tag	BF-30
Function	On/Off
Design pressure	200 psi
Body	Ductile iron/nylon
Trim	Bronze
Seats	EPT
Seals	EPT
Packing	NA
End connection	Grooved end
Body construction	Gear
Trim construction	- -

Manufacturer	Figure Number	Size Range
Kennedy*	GLBF7614	8” to 12”
Victaulic	700-gear	8” to 12”
Gruvlok-Grinnell	GN-7722-3	8” to 12”

VALVE DATA SHEET

Valve tag	BF-31
Function	On/Off
Design pressure	150 psi at 75 degrees F
Body	PVC
Trim	PVC disk
Seats	Viton
Seals	Viton
Packing	NA
End connection	NA
Body construction	Wafer
Trim construction	NA
Actuator	Lockable lever

Manufacturer	Figure Number	Size Range
GF	161.367.XXX	2 1/2” to 8”
Asahi/America	Type 75	1 1/2” to 8”
Chemtrol	W45BF-V-LH	4” to 8”

VALVE DATA SHEET

Valve tag	BF-32
Function	On/Off
Design pressure	150 psi at 75 degrees F
Body	PVC
Trim	PVC disk
Seats	Viton
Seals	Viton
Packing	NA
End connection	NA
Body construction	Wafer-gear
Trim construction	NA

Manufacturer	Figure Number	Size Range
Chemtrol	W45BF-V-GO*	6” to 10”
GF	150.367.XXX	6” to 10”

VALVE DATA SHEET

Valve tag	BF-33
Function	on/off
Design pressure	150 psi at 75 degrees F
Body	CPVC
Trim	CPVC disk
Seats	Viton
Seals	Viton
Packing	NA
End connection	NA
Body construction	Wafer-lever
Trim construction	NA

Manufacturer	Ficrure Number	Size Rancie
Chemtrol	BT CPVC-Viton	3” to 6”

VALVE DATA SHEET

Valve tag	BF-34
Function	On/Off
Design pressure	150 psig at 250 degrees F
Body	Epoxy-coated ductile iron
Trim	Teflon molded over 316 stainless steel disc
Seats	Viton
Stem	Teflon molded over 316 stainless steel
Valve type	Fully lugged butterfly valve
Operator type	Lever

Manufacturer	Figure Number	Size Range
Bray	Series 20	2” to 6”

VALVE DATA SHEET

Valve tag	CK-1
Function	Swing check
Design pressure	125 psi at 406 degrees F
Body	Bronze
Trim	Bronze
Seats	Bronze
Seals	NA
Packing	NA
End connection	Threaded
Body construction	Screwed cap
Trim construction	Integral

Manufacturer	Figure Number	Size Range
Crane	37	1/4” to 2”
Lunkenheimer	2144	1/4” to 2”
Stockham	B-319	1/4” to 2”

VALVE DATA SHEET

Valve tag	CK-13
Function	Swing check
Design pressure	400 psi at 230 degrees F
Body	Ductile iron
Trim	Bronze
Seats	EPDM
Seals	Rubber
Packing	None
End connection	Grooved end
Body construction	Bolted cover
Trim construction	Threaded

Manufacturer	Figure Number	Size Range
Victaulic	714/715	4” to 8”
Gruvlok-Grinnell	7811	2” to 12”

VALVE DATA SHEET

Valve tag	CK-14
Function	Swing check
Design pressure	125 psi at 250 degrees F through 12 inches, 125 psi at 450 degrees F through 24 inches
Body	Cast iron
Trim	Bronze
Seats	Bronze
Seals	NA
Packing	NA
End construction	Class 125, FF
Trim construction	Screwed seat

Manufacturer	Figure Number	Size Range
Crane	373	2” to 24”
Grinnell	GR6300A	2” to 12”
Stockam	F-947	2” to 10”

VALVE DATA SHEET

Valve tag	CK-15
Function	Swing check
Design pressure	300 steam working pressure
Body	Malleable iron
Trim	Malleable or ductile iron
Seats	Integral
Seals	NA
Packing	NA
End construction	Threaded
Trim construction	Y pattern, screwed cap

Manufacturer	Figure Number	Size Range
Crane	346 1/2	1/2” to 2”

VALVE DATA SHEET

Valve tag	CK-17
Function	Swing
Design pressure	150 psi at 500 degrees F
Body	WCB, Cs
Trim	13 Cr
Seats	13 Cr
Seals	Spiral wound
Packing	None
End connection	Class 150, RF
Body construction	Bolted cover
Trim construction	Threaded

Manufacturer	Figure Number	Size Range
Crane	147 XU	2 1/2” to 16”
Nibco	CS-173-U	2 1/2” to 16”
Stockham	15-SF	2 1/2” to 12”

VALVE DATA SHEET

Valve tag	CK-18
Function	Swing check
Design pressure	300 psig at 400 degrees F
Body	Carbon steel (A216 Gr. WCB)
Trim	410 stainless steel
Seats	410 stainless steel
Seals	NA
Packing	NA
End connection	Flanged
Body construction	Bolted cap
Trim construction	Hinged

Manufacturer	Figure Number	Size Range
Crane	159-XU	2” to 24”
Stockham	30-SF	2” to 12”

VALVE DATA SHEET

Valve tag	CK-34
Function	Silent
Design pressure	125 psi at 450 degrees F
Body	Cast iron
Trim	Bronze
Seats	Bronze
Seals	None
Packing	None
End connection	NA
Body construction	Compact, wafer
Trim construction	Bolted

Manufacturer	Figure Number	Size Range
Muessco	91AP	3” to 12”
Durabla	WLC	3” to 10”
APCO	300	1” to 10”
Nibco	W-910	2” to 10”
Crane	W-9125B	2” to 10”

VALVE DATA SHEET

Valve tag	CK-35
Function	Double disk check
Design pressure	150 psi at 100 degrees F
Body	Cast iron
Trim	Nickel-plated iron
Seats	EPDM
Seals	None
Packing	None
End connection	NA
Body construction	Compact, wafer
Trim construction	Bolted

Manufacturer	Figure Number	Size Range
Mueller	71AHI6H	2 1/2” to 54”
Mission	12H(EPDM)F	2 1/2” to 48”
Stockham	WG-970(EPDM)	2 1/2” to 48”

VALVE DATA SHEET

Valve tag	CK-36
Function	External adjustable spring-loaded swing
Design pressure	ANSI 125
Body	Cast iron
Trim	Stainless steel
Seats	EPDM
Seals	None
Packing	None
End connection	NA
Body construction	Compact, wafer
Trim construction	Bolted

Manufacturer	Figure Number	Size Range
Keystone	815-EPDM	3” to 42”
KFI Eagle	Model 20 Part 7435-119Gl32491	2 1/2” to 72”

VALVE DATA SHEET

Valve tag	CK-51
Function	Ball check, electronics
Design pressure	120 psi at 100 degrees F, nonshock
Body	PVC
Trim	PVC ball
Seats	Viton
Seals	Viton
Packing	NA
End connection	Socket
Body construction	Double union; three piece
Trim construction	Integral

Manufacturer	Figure Number	Size Range
Chemtrol	U45BC-V	1/2” to 4”
GF	161.360.3XX	3/8” to 2”
Hayward	TCLOXXXT	1/4” to 4”
Spears	2239 Series	1/2” to 2”
Spears	2231 Series	2 1/2” to 4”

VALVE DATA SHEET

Valve tag	CK-53
Function	Ball check
Design pressure	150 psi at 75 degrees F
Body	CPVC
Trim	CPVC
Seats	Viton
Seals	Viton
Packing	NA
End connection	Socket weld
Body construction	Double union
Trim construction	Integral

Manufacturer	Figure Number	Size Range
Chemtrol	U51BC-v	1/2” to 4”
Hayward	TCLOXXXTE	1/2” to 4”
Spears	2239 Series	1/2” to 2”
Spears	2231 Series	2 1/2” to 4”

VALVE DATA SHEET

Valve tag	CK-71
Function	Swing
Design pressure	150 psi at 70 degrees F, nonshock*
Body	PVC
Trim	PVC
Seals	Viton
Packing	NA
End connection	ASA 150 pounds FF
Body construction**	Bolted bonnet
Trim construction	Integral

Manufacturer	Figure Number	Size Range
Asahi/America	Swing check	3/4” to 8”

VALVE DATA SHEET

Valve tag	CK-75
Function	Ball check
Design pressure	??
Body	PVDF
Trim	??
Seats	Viton
Seals	Viton
Packing	NA
End connection	Fusion weld
Body construction**	??
Trim construction	??

Manufacturer	Figure Number	Size Range
GF	175.360.4XX	3/4” to 2”

VALVE DATA SHEET

valve tag	CK-81
Function	Swing
Design pressure	170 psi at 250 degrees F*
Body	Bronze
Trim	Brass
Seats	Bronze
Seals	NA
Packing	NA
End connection	Solder
Body construction	Screwed cap
Trim construction	Integral

Manufacturer	Figure Number	Size Range
Crane	1707 S	
Stockham	B-309	3/8” to 2”
Walworth	3406 SJ	

VALVE DATA SHEET

Valve tag	CK-82
Function	Lift
Design pressure	800 psi at 850 degrees F
Body	Forged steel
Trim	410 stainless steel, 500 BHN
Seats	Hard faced
Seals	Spiral wound
Packing	None
End connection	Threaded
Body construction	Bolted cover
Trim cottt-riiction	Integral

Manufacturer	Figure Number	Size Range
RP&:C	F-90	1/4” to 2”
Vogt	701	1/4” to 2”

VALVE DATA SHEET

Valve tag	CK-83
Function	Swing
Design pressure	800 psi at 850 degrees F
Body	Forged steel
Trim	13 Cr
Seats	Hard faced
Seals	Spiral wound
Packing	None
End connection	Threaded
Body construction	Bolted cover
Trim construction	Integral

Manufacturer	Figure Number	Size Range
Vogt	4835	1”to 2”

VALVE DATA SHEET

Valve tag	DA-13
Function	on/off - throttling
Design pressure	125 psi at 100 degrees F
Body	PVC
Trim	None
Seats	PVC
Seals	Diaphragm of Teflon-coated Viton
Packing	NA
End connection	Spigot (male)
Body construction	Bolted
Trim construction	weir
Operator type	Manual

Manufacturer	Figure Number	Size Range
GEMU	677-X-D-30-1-55-0	1/2” to 4”

VALVE DATA SHEET

Valve tag	DA-14
Function	On/off - throttling
Design pressure	125 psi at 100 degrees F
Body	PVC
Trim	None
Seats	PVC
Seals	Diaphragm of Teflon-coated EPDM
Packing	NA
End connection	Spigot (male)
Body construction	Bolted
Trim construction	Weir
Operator type	Manual

Manufacturer	Figure Number	Size Range
GEMU	677-X-D-30-1-52-0	1/2” to 4”

VALVE DATA SHEET

Valve tag	DA-15
Function	On/Off - throttling
Design pressure	125 psi at 100 degrees F
Body	CPVC
Trim	Teflon diaphragm
Seats	CPVC
Seals	Diaphragm of Teflon-coated Viton
Packing	NA
End connection	Spigot (male)
Body construction	Bolted
Trim construction	Weir
Operator type	Manual

Manufacturer	Figure Number	Size Range
GEMU	677-X-D-30-2-52-0	1/2” to 4”

VALVE DATA SHEET

Valve tag	GA-1
Function	On/off only
Design pressure	125 psi at 406 degrees F
Body	Bronze
Trim	Bronze
Seats	Bronze
Seals	None
Packing	TFE
End connection	Threaded
Body construction	Screwed bonnet; nonrising stem
Trim construction	Integral

Manufacturer	Figure Number	Size Range
Crane	438	1/4” to 2”
Lunkenheimer	2129	1/4” to 2”
Stockham	B-110	1/4” to 2”

VALVE DATA SHEET

Valve tag	GA-4
Function	on/Off only
Design pressure	125 psi at 406 degrees F
Body	Bronze
Trim	Bronze
Seats	Bronze
Seals	None
Packing	TFE/graph
End connection	Threaded
Body construction	Screwed bonnet, rising stem
Trim construction	Integral

Manufacturer	Figure Number	Size Range
Crane	428	1/4” to 2”
Lunkenheimer	2127	1/4” to 2”
Stockham	B-107	1/4” to 2”

VALVE DATA SHEET

Valve tag	GA-10
Function	On/off only
Design pressure	125 psi at 450 degrees F
Body	Cast iron
Trim	Bronze
Seats	Bronze
Packing	TFE/graph
End connection	Class 125, FF
Body construction	Bolted bonnet, OS and Y
Trim construction	Screwed

Manufacturer	Figure Number	Size Range
Crane	465 1/2	3” to 48”
Lunkenheimer	1430	3” to 24”
Stockham	G-623	3” to 36”

VALVE DATA SHEET

Valve tag	GA-11
Function	On/off only - nonrising stem
Design pressure	125 psi at 450 degrees F
Body	Cast iron
Trim	Bronze
Seats	Bronze
Packing	TFE/graph
End connection	Class 125, FF
Body construction	Bolted bonnet
Trim construction	Screwed

Manufacturer	Figure Number	Size Range
Crane	461	3” to 48”
Lunkenheimer	1428	3” to 12”
Stockham	G-612	3” to 30”

VALVE DATA SHEET

Valve tag	GA-17
Function	On/Off
Design pressure	150 psi at 500 degrees F
Body	WCB, Carbon steel
Trim	13 Cr
Seats	Hard faced
Seals	Spiral wound
Packing	TFE/graph faced
End connection	Butt weld
Body construction	Bolted bonnet, OS&Y
Trim construction	Screwed

Manufacturer	Figure Number	Size Range
Crane	47 1/2 X U	2” to 30”
Nibco	CS-103XU	2” to 24”
Stockham	15-OW	2” to 30”

VALVE DATA SHEET

Valve tag	GA-18
Function	on/off only
Design pressure	800 psi at 850 degrees F
Body	Forged steel
Trim	420 stainless steel, 500 BHN
Seats	410 stainless steel
Seals	Spiral wound
Packing	Carbon/graph oil
End connection	Threaded

Body construction	Bolted bonnet	OS&Y
Trim construction	Integral	

Manufacturer	Ficrure Number	Size Range
RP&C	F-56	1/4” to 2”
Hancock	950 s	1/4” to 2”
Vogt	12111	1/4” to 2”
Crane	B 3604XO	1/4” to 2”

VALVE DATA SHEET

Valve tag	GA-19
Function	On/Off only - rising stem
Design pressure	300 psi at 400 degrees F
Body	Carbon steel
Trim	410 stainless steel
Seats	Seal-welded stainless steel
Seals	NA
Packing	Carbon/graph oil
End connection	Flanged
Body construction	Bolted bonnet OS&Y
Trim construction	Screwed

Manufacturer	Figure Number	Size Range
Crane	33 XU	2” to 30”
Stockham	30-OF	2” to 24”

VALVE DATA SHEET

Valve tag	GA-21
Function	On/Off only - rising stem
Design pressure	300 psi at 400 degrees F
Body	Carbon steel (A216 Gr. WCB)
Trim	410 stainless steel
Seats	410 stainless steel
Seals	Spiral wound
Packing	Carbon/graph oil
End connection	Butt welded
Body construction	Bolted bonnet OS&Y
Trim construction	Screwed

Manufacturer	Figure Number	Size Range
Crane	33 1/2 XU	2” to 30”
Stockham	30-OW	2" to 24"

VALVE DATA SHEET

Valve tag	GA-25
Function	On/off only - nonrising stem
Design pressure	200 psi*
Body	Bronze
Trim	Bronze
Seats	Bronze
Seals	None
Packing	TFE
End connection	Solder
Body construction	Screwed bonnet
Trim construction	Integral

Manufacturer	Figure Number	Size Range
Grinnel	3000 SJ	3/8” to 3”
Walworth	W4 SJ	3/8” to 3”

VALVE DATA SHEET

Valve tag	GA-26
Function	on/off only
Design pressure	200 psi*
Body	Bronze
Trim	Bronze
Seats	Bronze
Seals	None
Packing	TFE
End connection	Solder
Body construction	Screwed bonnet
Trim construction	Integral

Manufacturer	Figure Number	Size Range
Grinnel	3010 SJ	3/8” to 3”
Walworth	W55-si	3/8” to 3”

VALVE DATA SHEET

Valve tag	GL-3
Function	Throttling and tight shutoff
Design pressure	150 psig at 400 degrees F
Body	Bronze
Trim	Teflon coated disc
Seats	Bronze
Seals	None
Packing	TFE/graph
End connection	Threaded
Body construction	Union bonnet through 2”
Trim construction	Integral

Manufacturer	Figure Number	Size Range
Crane	7-TF	1/8” to 2”
Stockham	B-22	1/8” to 2”

VALVE DATA SHEET

Valve tag	GL-8
Function	On/Off - throttling
Design pressure	300 psig at 400 degrees F
Body	Carbon steel (A216 Gr. WCB)
Trim	410 stainless steel (13 percent chrome facing)
Seating	410 stainless steel (13 percent chrome facing)
Seals	NA
Packing	TFE
End connection	Flanged
Body construction	Bolted bonnet (OS&Y)
Trim construction	Screwed

Manufacturer	Figure Number	Size Range
Crane	151-XU	2” to 12”
Stockham	30-GPF	2” to 8”

VALVE DATA SHEET

Valve tag	GL-9
Function	On/Off - throttling
Design pressure	300 psig at 400 degrees F
Body	Carbon steel (A216 Gr. WCB)
Trim	410 stainless steel (13 percent chrome facing)
Seating	410 stainless steel (13 percent chrome facing)
Seals	NA
Packing	TFE
End connection	Butt welding
Body construction	Bolted bonnet (OS&Y)
Trim construction	Screwed

Manufacturer	Figure Number	Size Range
Crane	151 1/2-XU	2” to 12”
Stockham	30-GPW	2” to 8”

VALVE DATA SHEET

Valve tag	GL-16
Function	on/off - throttling- electronics*
Design pressure	250 psi at**
Body	Brass
Trim	Teflon disc
Seats	Brass
Seals	Bellows or diaphragm
Packing	None
End connection	Extended copper tube stubs
Body construction	Single piece body
Trim construction	Integral

Manufacturer	Figure Number	Size Range
Carten	G series	1/8” to1”
Carten	GB series	1 1/2” to 4”

VALVE DATA SHEET

Valve tag	GL-28
Function	Throttling
Design pressure	125 psi at 450 degrees F
Body	Cast iron
Trim	Bronze
Seats	Bronze
Packing	TFE/graph
End connection	Class 125, FF
Body construction	Bolted bonnet, OS&Y
Trim construction	Screwed

Manufacturer	Figure Number	Size Range
Crane	351	3” to 10”
Lunkenheimer	1123	3” to 10”
stockham	G-512	3” to 10”

VALVE DATA SHEET

Valve tag	GL-37
Function	Throttling
Design pressure	150 psi at 500 degrees F
Body	WCB, Carbon steel
Trim	13 Cr
Seats	13 Cr
Seals	Spiral wound
Packing	Carbon/graph oil
End connection	Class 150, RF
Body construction	Bolted bonnet, OS&Y
Trim construction	Screwed

Manufacturer	Figure Number	Size Range
Crane	143X	2 1/2” to 14”
Nibco	CS-132-U	2 1/2” to 8”
Stockham	15-GPF	2 1/2” to 8”

VALVE DATA SHEET

Valve tag	GL-72
Function	Throttling
Design pressure	800 psi at 850 degrees F
Body	Forged steel
Trim	420 stainless steel, 500 BHN
Seats	Hard faced
Seals	Spiral-wound gasket
Packing	Carbon fiber/graph oil
End connection	Threaded
Body construction	Bolted bonnet, OS&Y
Trim construction	Integral

Manufacturer	Figure Number	Size Range
RP&C	F-80	1/2” to 2”
Vogt	12141	1/4” to 2”
Crane	B 3644X0	1/2” to 2”

VALVE DATA SHEET

Valve tag	PL-15
Function	on/off - natural gas and LPG
Design pressure	200 psi at 150 degrees F
Body	Ductile iron
Trim	Lubricated
Seats	Ductile iron
Seals	TFE
Packing	NA
End connection	Class 125, FF
Body construction	Bolted; wrench operated
Trim construction	Cylindrical*

Manufacturer	Figure Number	Size Range
Homestead	602 with 900 sealant	3” to 6”
Rockwell	Fig. 143	3” to 6”

VALVE DATA SHEET

Valve tag	**SP-1**
Function	**Flow control**
Design pressure	**5,000 psi max.**
Seals	**Viton**
Material	**Carbon Steel**
End connection	**½" NPTF**
Other	

Manufacturer	**Figure Number**	**Size Range**
Hydac	**DRV-12-01.X/5** **Mfg. P/N: 705542**	

VALVE DATA SHEET

Valve tag	**SP-2**
Function	**Flow control**
Design pressure	**5,000 psi max.**
Seals	**Polyacetal**
Material	**Carbon Steel**
End connection	**3/4" NPT**
Other	

Manufacturer	**Figure Number**	**Size Range**
Hydac	**KHB** **Mfg. P/N: KHB-20NPT-111114-11X-G-SF-03203718**	

VALVE DATA SHEET

Valve tag	**SP-3**
Function	**Directional control valve**
Design pressure	**3,500 psi max.**
Material	**Carbon Steel**
End connection	**3/4" NPT**
Other	

Manufacturer	**Figure Number**	**Size Range**
Gresen	**M/N: V20**	

VALVE DATA SHEET

Valve tag	SP-27
Function	Triple Duty: Nonslam check, balancing valve, and shutoff in single body
Design pressure	175 psi at 300 degrees F
Body	Cast iron
Trim	Bronze disc; stainless steel spring and stem
Seats	Bronze
Seals	TFE
Packing	TFE
End connection	Class 125, FF
Body construction	Straight-through pattern
Trim construction	Integral

Manufacturer	Figure Number	Size Range
Bell & Gossett	Model No. 3DS-XX	2” to 14”
Victaulic	Model No. VIC-300+ Series 711, Series 715	4” to 12”

VALVE DATA SHEET

Valve tag	SP-29
Function	Circuit setter balancing valve with dial readout and flow ports
Design pressure	100 psi at 180 degrees F
Body	Bronze through 3” ; 4" is Cast iron
Trim	Bronze disc or brass ball
Seats	Glass and carbon-filled TFE
Seals	NA
Packing	NA
End connection	Threaded through 311; Class 125, FF over 4"
Body construction	Solid
Trim construction	Integral

Manufacturer	Figure Number	Size Range
Bell & Gossett	Model CB-X	1/2” to 8”

VALVE DATA SHEET

Valve tag	SP-67
Function	Combination isolation valve, union, and readout port
Design pressure	400 psi at 300 degrees F
Body	Hot forged brass
Trim	Brass
Seats	PTFE
Seals	Viton 0-rings
Packing	PTFE
End connection	Soldered
Body construction	Two piece
Trim construction	N/A

Manufacturer	Figure Number	Size Range
Hci	T-AF through FF	1/2” to 2”

VALVE DATA SHEET

Valve tag	SP-68
Function	Combination isolation valve, strainer, union, and readout port
Design pressure	400 psi at 300 degrees F
Body	Hot forged brass
Trim	Brass
Seats	PTFE
Seals	Viton 0-rings
Packing	PTFE
End connection	Soldered
Body construction	Three piece
Trim construction	N/A

Manufacturer	Figure Number	Size Range
HCi	TS-AFF through FFF	1/2”to 2”

VALVE DATA SHEET

Valve tag	SP-69
Function	Combination dielectric union, reducer, and readout port
Design pressure	400 psi at 250 degrees F
Body	Hot forged brass
Trim	N/A
Seats	N/A
SealB	N/A
Packing	N/A
End connection	Soldered (body end) Threaded (female or male NPT)
Body construction	Two piece
Trim construction	N/A

Manufacturer	Figure Number	Size Range
HCi	TU-A through F	1/2" to 2”

VALVE DATA SHEET

Valve tag	SP-70
Function	Combination circuit setter, union, and readout port
Design pressure	400 psi at 300 degrees F
Body	Hot forged brass
Trim	Brass
Seats	PTFE
Seals	viton 0-rings
Packing	PTFE
End connection	Soldered
Body construction	Three piece
Trim construction	N/A

Manufacturer	Figure Number	Size Range
Hci	TB-A through F	1/2" to 2”

Technical Specification

Section 15111

Control Valves

PART 1 -- GENERAL

1.1 WORK INCLUDED
A. This Section specifies the requirements for both open/ close and modulating control valves.

1.2 RELATED WORK
A. This Section shall be used in conjunction with the following other specifications and related Contract Documents to establish the standard requirements for the referenced control valves.
1. Section 15100H - Valves, General.
2. The appendix following the end of this Section.
B. In the event of conflict regarding requirements for the referenced control valves between this Section and any other section, the provisions of this Section shall govern.

1.3 DESIGN CRITERIA
A. Unless otherwise stated, all actuators shall be capable of shutting off the associated valve against the specified upstream pressure.
B. All air tubing connections shall be with compression type connectors from Hoke or Swagelok. Instrument air tubing connections will be made by others.
C. The data sheets specify which valves are to be provided with valve positioners, limit switches, solenoid valves, air sets.
D. All positioners shall employ valve position signal feedback and shall adjust the output signal to the valve as required to properly position the valve.
E. All control valves shall be installed by the Subcontractor. The Subcontractor shall calibrate and stroke the valve, verifying valve fail mode, make final instrument air and position signal connections, documenting the calibration, fail mode, and stroking.
F. All positioners, solenoid valves, limit switches, and speed control valve actuators shall all be factory mounted on the valve complete with tubing from the positioner to the actuator.
G. All valves, actuators, positioners, limit switches, air sets, and solenoid valves that are located outside shall be suitable for weatherproof environment.
H. All solenoid valves shall be 120 Vac coils with fail modes as shown on the data sheets and P&IDs unless otherwise specified. All actuators shall have spring assists, except electronically actuated valves.
I. See data sheets for identification of input signal requirements. Modulating valves shall either accept a 4-20 mAdc signal or a pneumatic 3 to 15 psig signal provided by others.
J. Valves shall be of the same material, fittings, and quality for the line class and service intended.

1.4 SUBMITTALS - CONTROL VALVE - GENERAL
A. Provide the following:
1. Detail information on the materials of construction of the seats, seals, and stem packing to be provided.
2. Catalog cuts, data sheets on all actuators, valves, positioners, limit switches, air sets, speed control valves, mufflers, and other accessories.

1.5 DELIVERY, STORAGE AND HANDLING
A. The following requirements apply to all valves.
1. Any valve that becomes damaged in shipping or handling shall not be used unless it is repaired to the original requirements. Such valves shall be inspected and approved by the Project Engineer before its use.
B. Prior to installation, 100 percent of valves shall be inspected for manufacturing defects, and impurities. If any defect is discovered, the valve shall be repaired or replaced.

PART 2 -- PRODUCTS

2. 1 GENERAL
A. All control valves shall be line size unless indicated otherwise on the Drawings.

2.2 ACCEPTABLE MANUFACTURERS
A. Each data sheet lists only one manufacturer. This may or may not mean that only that manufacturer is acceptable for installation. Contact Project Engineer to determine acceptable manufacturers for each application.

2.3 MODULATING VALVES
A. None.

2.4 POSITIONERS
A. Included as part of valve where required.

2.5 Limit Switches
A. Included as part of valve where required.
B. Dry contact, rated at 120vac, 3 amps

2.6 ON/OFF VALVES
A. Pneumatically Actuated:
1. All pneumatically actuated valves shall be provided as normally closed unless otherwise specified. Valve shall be capable of remaining closed at 1 1/2 times normal operating pressure as a minimum.
B. Electrically Actuated (Solenoid): Valve solenoid class shall meet the electrical requirements of the service and location. Water service valves may require slow-close option.

2.7 GENERAL
A. All control valves shall have a local position indicator.
B. All actuated quarter-turn valves shall have at a minimum a stainless steel stem (and ball if applicable).
C. All actuators for quarter-turn valves shall be a double rack and pinion type.
D. All quarter-turn actuators shall be sized for a torque which is greater than that required to operate the valve at any point, including breakaway.
E. All valves shall be permanently marked with the following information:
1. Manufacturer's name or unique symbol.
2. Heat number.
3. Direction of flow.
F. When purge port required, provide a single 1/4-inch VCR purge port on the outlet side of each valve. Purge ports shall have a female nut, blind cap, and solid nickel (-VS) gasket.

PART 3 -- EXECUTION

3.1 INSTALLATION
A. Requirements for cleaning, installing, and leak testing valves shall be as defined in the Detail Piping Specifications and according to the manufacturer's recommendations.
B. Control valves shall be installed in locations which are easily accessible for maintenance.

3.2 ACTUATOR ORIENTATION

A. Direct stem-actuated valves shall be installed with the stem and actuator vertical above the pipe for horizontal pipe runs. Rotary stem-actuated valves shall be installed with the actuator thrust line vertical, wherever possible. Actuator mounting adapters, to enable vertical installation, shall be provided if available. All control butterfly valves shall be installed with the shaft horizontally controlled.

3.3 TESTING

A. Valves shall be tested at the same time that the adjacent pipeline is tested. Joints shall show no visible leakage under tests. Repair joints that show signs of leakage prior to final acceptance. If there are any special parts of control systems or operators that might be damaged by the pipeline test, they shall be properly protected.

PART 4 – SURVEILLANCE, MAINTENACE & CALIBRATION

4.1 INTRODUCTION

A. The following tables define the frequency of surveillance, functionality testing, preventative maintenance, and calibration for indicating devices as required for proper operation.
B. All procedures to be implemented as per the manufacture recommendations/procedures.
C. During Surveillance the following should be done:
   1. devices should be noted for visible problems: leaks, cracks, disconnected wires, etc.
D. During Functional Testing the following should be done:
   1. actuated to show proper position indication modulates, and/or positions switches activate;
   2. actuated to show that value does open and close.
E. During Preventative Maintenance the following items should be inspected:
   1. inspect wire insulation for cracks, scars, deterioration, and loose connections;
   2. inspect for liquid/air leaks;
   3. inspect for warping due to heat and/or stress;
   4. if air operated, verify pressure is within range.
F. If problems are detected during the above procedures (parts C through F), they shall be reported to the on shift supervisor, and corrective action taken.

4.2 TABLES

DEVICE	SUBSYSTEM	Surveillance	Functional Test	Preventative Maintenance	Calibration
FV1	All Systems	As used	6 months	Annually	n/a
FV5	Product Handling	As used	6 months	6 months	n/a

Solenoid Valve

Attachment FV

Instrument Specifications Forms SOLENOID VAL

Instrument No. FV Area/Location No

Process Media
Liquid _____ Specific Gravity
Gasses O2, N2, I.A., S.A.
Vapors _____
Solids _____
Temperature °F Min _____ Max Ambient
Pressure 100 PSIG
Flow

GENERAL
This is an open-close solenoid valve, used on water, air, and gas.

Solenoid valves
No. of Solenoid Coils One
Enclosure Nema 4
Voltage Hz 110 VAC 60 HZ
Electrical Connection ½" NPT
Power Consumption Less than 20 watts
Size of Coil Continuous duty molded class F

VALVE BODY
2-Way Valve Body Ports
Port/Body Size ½" to 2"
Inlet and Outlet Port Threads ½" to 2" NPT Female
Material Body Brass or SS
Material Seat
Material Diaphragm
Seal and Disc Approved Material

Material	Application
Buna "N"	most air, water
Neoprene	Oxygen
Ethylene Propylene	Hot water, Steam
Viton	Hydrocarbons (Fuels, Solvents)

Operation Direct/Pilot
Packless or Type Packed
Manual Re-Set
Manual Operator X
Fail Safe Operation Fail close with loss of 110 VAC electrical power
Maximum Pressure Rating 300 PSI
Core Tube 305 Stainless steel
Core and plugnut 430 F stainless steel
Springs 302 stainless steel
Shading Coil Copper
Temperatures Ambient nominal range 32°F to 80°F
Installation Must be mounted with solenoid vertical, and upright
Cleaned for oxygen or nitrogen service
Normally Closed Operation

WHEN DE-ENERGIZED FAILSAFE
2-Way Valve Opens/Closes Fail Close

Asco Model No. Series 8210

Preferred vendor, but not limited to;
Manufacture/Vendor ASCO / Automatic Switch Co.
Other Vendors;
Manufacture/Model No. _____
1.
2.
3.

1. Approved _____ Date _____ 4. Approved _____ Date
2. Approved _____ Date _____ 5. Approved _____ Date
3. Approved _____ Date _____ 6. Approved _____ Date

3 Way Solenoid Valve

Attachment FV5

Instrument Specifications Forms 3 WAY SOLENOID VAL

Instrument No. FV5 Area/Location No

Process Media
Liquid _____ Specific Gravity
Gasses O2, N2, I.A., S.A.
Vapors _____
Solids _____
Temperature °F Min _____ Max Ambient
Pressure 100 PSIG
Flow

GENERAL
This is a 3 way solenoid valve used on gas, air and water.

Solenoid valves
No. of Solenoid Coils One
Enclosure Nema 4
Voltage Hz 110 VAC 60 HZ
Electrical Connection ½" NPT
Power Consumption Less than 20 watts
Size of Coil Continuous duty molded class F

VALVE BODY
3-Way Valve Body Ports
Port/Body Size 1/8" to ½"
Inlet and Outlet Port Threads 1/8" to ½" NPT Female
Material Body Brass or SS
Material Seat
Material Diaphragm
Seal and Disc Approved Material

Material	Application
Buna "N"	most air, water
Neoprene	Oxygen
Ethylene Propylene	Hot water, Steam
Viton	Hydrocarbons (Fuels, Solvents)

Core Tube 305 Stainless steel
Core and plugnut 430F stainless steel
Springs 302 stainless steel
Shading Coil Copper or Silver
Operation Direct/Pilot
Manual Re-Set
Manual Operator X
Fail Safe Operation Fail Pressure close with loss of 110 VAC electrical power
Maximum Pressure Rating 250 PSI
Temperatures Ambient nominal range 32°F to 104°F
Installation Can be mounted in any position
Cleaned for oxygen or nitrogen service
Universal Operation

WHEN DE-ENERGIZED FAILSAFE
3-Way Valve Vent Port Opens
Press to Cyl. 1/Cyl. 2

Asco Model No. Series 8300

Preferred vendor, but not limited to;
Manufacture/Vendor ASCO / Automatic Switch Co.
Other Vendors;
Manufacture/Model No. _____
1.

1. Approved _____ Date _____ 4. Approved _____ Date
2. Approved _____ Date _____ 5. Approved _____ Date
3. Approved _____ Date _____ 6. Approved _____ Date

PART 1 -- GENERAL

1.1 WORK INCLUDED

A. This Section specifies the requirements for the following local indicators.
1. Pressure Gauges.
2. Temperature Gauges.
3. Flow Indicators.
4. Transmitters.
5. Indicating Controllers.
6. Status/Alarm Lights and Horns.

1.2 RELATED WORK

A. This Section shall be used in conjunction with the following other specifications and related Contract Documents to establish the total requirements for indicators.
1. Section 15050 - Basic Mechanical Requirements.
2. The appendix following the end of this Section.

B. In the event of conflict regarding the general requirements for the referenced local indicators between this Section and any other section, the provisions of this Section shall govern.

PART 2 -- PRODUCTS

2.1 STANDARDS

A. Accuracy grades listed on the data sheets shall be in accordance with ANSI B40.1.

2.2 THERMOWELLS

A. Unless required otherwise in the specifications, thermowells provided shall be as follows:
1. Profile: Stepped shank.
2. Service connection: 3/4-inch NPT.
3. Length: As required for tip to be midstream of piping or in vessel sufficient distance to contact active media.
4. Bore:
   a. Bimetal type; 0.260 inch.
   b. Other; minimum required to allow insertion of sensor.
5. Material:
   a. HVAC; brass.
   b. Process; 316 stainless.
6. Other: Provide lagging extension when installed in systems to be insulated.

2.3 PRESSURE GAUGES

A. For service, dial size, pressure range, and manufacturers, see the appendix and attached data sheets.

2.4 TEMPERATURE GAUGES

A. Unless specified otherwise in the Drawings, temperature gauges shall be as follows:
1. Dial size: 2 inch min. larger as require for visibility.
2. Style: Lower back mount stem.
3. Connection: 0.25 inch MNPT.

4. Bimetal.
5. Stem length: as necessary to obtain accurate reading.
6. Temperature range: as necessary for normal operating temperature to fall between 1/2 and 3/4 of scale but maximum system temperature to not exceed range.
7. Acceptable Manufacturer: Ashcroft Model 30EI60EXXX.

2.5 FLOW INDICATORS

A. For service, flow range, and manufacturers, see the appendix and attached data sheets.

PART 3 -- EXECUTION

3.1 INSTALLATION

A. All indicating devices shall be installed so that they can easily be read from floor level and are readily accessible for maintenance and service.
B. All pressure gauges installed in steam and any other elevated temperature service shall be protected with a thermal isolator (pigtail).
1. Angle style pigtails shall be used for gauges connected to vertical surfaces.
2. Straight style pigtails shall be used for gauges connected to horizontal surfaces.
3. Pigtails are not to be-insulated.
4. Pigtails shall be of a material rated for the service in which they are to be installed.
C. Flow indicators without spring float shall be installed vertically.

PART 4 – SURVEILLANCE, MAINTENACE & CALIBRATION

4.1 INTRODUCTION

A. The following tables define the frequency of surveillance, functionality testing, preventative maintenance, and calibration for indicating devices as required for proper indication.
B. All procedures to be implemented as per the manufacture recommendations/procedures.
C. During Surveillance the following should be done:
1. measured value to be recorded, status of lights to be recorded;
2. devices should be noted for visible problems: leaks, cracks, disconnected wires, moisture inside displays, cracked displays, etc.
D. During Functional Testing the following items should be inspected:
1. each on/off switch device shall be actuated to show proper function. (i.e. alarm sounds, pump starts, etc.);
2. each indicating device shall be modulated to show proper function. (i.e. alarm sounds, etc).
E. During Preventative Maintenance the following items should be inspected:
1. inspect wire insulation for cracks, scars, deterioration, and loose connections;
2. inspect for liquid/air leaks;
3. inspect for warping due to heat and/or stress;
4. removing any dust accumulation from internal components;
F. Calibration shall be performed as required by manufacture. The following is a description for minimal calibration:
1. Transmitting devices
a. compare display to known calibrated device, adjust as required;
b. increase/decrease process to verify output of device. (i.e. increase temperature).
2. Indicating devices
a. modulate input with calibrated device, observe display, adjust as required;
b. reconnect to transmitting device, endure integrity of system.
3. Control loops (temperature, pressure, level, flow)

a. verify control indication matches transmitting device;
b. verify setpoint adjustments;
c. modulate controller process variable, observe output parameter as per setpoint;
d. adjust control values for controlling process;
e. verify controlled device (valve) actuated per output.

4. In all cases, follow the manufacture's preferred method.

G. If problems are detected during the above procedures (parts C through F), they shall be reported to the on shift supervisor, and corrective action taken.

4.2 TABLES

DEVICE TYPE	SUBSYSTEM	Surveillance	Functional Test	Preventative Maintenance	Calibration
CE	Drip Pans	4 hrs	6 months	6 months	Annually
CE2	Liquid Piping	4 hrs	6 months	6 months	Annually
HK	Conveyors, Feeders, Sort Table	As used	6 months	6 months	Annually
HS	All TP Systems	As used	6 months	Annually	n/a
	All TT Systems	As used	6 months	Annually	n/a
	All ST Systems	8 hrs	6 months	Annually	n/a
PI-G	PCW	4 hrs	6 months	6 months	Annually
	N2	4 hrs	6 months	6 months	Annually
	IA/SA	4 hrs	6 months	6 months	Annually
PDI-G	Liquid Systems	As Used	6 months	Annually	Annually
PDI-G2	All Systems	2 hrs	6 months	Annually	Annually
PDI-G3	All Systems	2 hrs	6 months	6 months	Annually
PDS	Feed Prep.	n/a	6 months	6 months	Annually
Pilot/Pizo	All Systems	2 hrs	6 months	6 months	n/a
TI-G	PCW	4 hrs	n/a	6 months	Annually
	Liquid Tank Temps	4 hrs	n/a	6 months	Annually
TE-K	All Systems	n/a	6 months	Annually	Annually
VFD	All Systems	As used	6 months	Annually	Annually
WEWIT	All Systems	As used	6 months	Annually	Annually

Formatted: Font: 12 pt

Specification Section 15130H

Table Of Contents For Non Thermal Building

1. Conductivity Element Attachment **CE**
2. Conductivity Element Attachment **CE2**
3. LED Indicating Display **DSPLY**
4. Process Controller **CTRLR**
5. Process Controller **CTRLR2**
6. Indicating Flowmeter **FIT1**
7. **Indicating Flowmeter FIT2**
8. Indicating Flowmeter **FIT3**
9. Hand Switch Attachment **HS**
10. Level Element Transmitter **LET**
11. Level Switch **LS**
12. Differential Pressure Indicating Gauge Attachment **PDI-G**
13. Differential Pressure Indicating Gauge Attachment **PDI-G2**
14. Differential Pressure Indicating Gauge Attachment **PDI-G3**
15. Differential Pressure Switch Lo Attachment **PDS**
16. Differential Pressure Transmitter Attachment **PDT**
17. Pressure Indicating Gauge Attachment **PI-G**
18. Photo-Ionization Detector (Filter Break-through) **PID**
19. Pilot Alarm Lights Attachment **Pilot**
20. Pilot Alarm Lights Attachment **Pilot2**
21. Pizo Alarm Horns Attachment **Pizo**
22. Temperature Element Type K Attachment **TE-K**
23. Temperature Indicating Gauge Attachment **TI-G**
24. Event Timer **Timer**
25. Variable Frequency Drive Attachment **VFD**
26. Weigh Scale Element and Indicating Transmitter Attachment **WEWIT**
27. Ultrasonic Level Element Transmitter **LET2**

Conductivity Element

Attachment CE

Instrument Specifications Forms LEAK DETECTI0N SENSOR/ALARM PANEL

Instrument No. CE Area/Location No

Process Media
Liquid Water, Slurry Specific Gravity
Gasses _____
Vapors _____
Solids _____
Temperature °F Min _____ Max
Pressure
Flow

GENERAL
This device will detect spilled liquids in liquid containment pans. Place in the low point of the pan.

Sensor
Supply Voltage 12 Vdc
Material Chemical Resistant Plastic / SS
Cable Length 16 feet
Liquid Detection Level ¾"

Leak Detection Sensor
Warrick Controls Model No. DLP 1

Alarm Panel
Supply Voltage 120Vac, 6.6VA
Indicators Red, Green, Yellow (Solid State LEDs)
Audible Alarm Field Adjustable 77 to 97 dB @ 2ft
Sensor Circuit 12Vdc, 0.238ma
Operating Temperature -22°F to 150°F
Process Conduit Connection ¾" NPT (PVC)
Electrical Conduit Connection ½" NPT (metal)
Auxiliary contact SPDT 10A @ 120Vac, resistive

Monitoring Panel
Warrick Controls Model No. TA 731-A-0

Preferred vendor, but not limited to;
Manufacture/Vendor Warrick Controls Inc. / Branom Instruments

Other Vendors;
Manufacture/Model No. _____
1.
2.
3.

1. Approved _____ Date _____
2. Approved _____ Date _____
3. Approved _____ Date _____
4. Approved _____ Date
5. Approved _____ Date
6. Approved _____ Date

Conductivity Element

Attachment CE2

Instrument No. CE2 Area/Location No

Process Media
Liquid Water, Aqueous Chemicals Specific Gravity
Gasses _____
Vapors _____
Solids _____
Temperature °F Min _____ Max
Pressure
Flow

GENERAL
This device will detect liquid leaks inside double contained pipe(coaxial pipe).
The alarm panel is designed to annunciated a detected leak and display the distance from the panel where the leak has occurred. Using a map the operator will know exactly where the leak is located.

Sensor Cable
Liquid Detection Level contact with cable; <1/8"
Operating Temperature 221 F (max)
Cable Connector/Splices rated at 194 F (90 C)

Chemically Resistance based on ASTM D-543 at 77 F (25 C)
Trichloroethylene 100%
Suplhuric Acid 98%
Hydrochloric Acid 37%
Hydrofluoric Acid 60%
Aqua regia

Cable Physical Properties
Diameter 0.210 inches
Continuity/signal wires 2 x 24 AWG with cross-linked fluoropolymer insulation
Sensor wires 30 AWG with fluoropolymer conductive jacket
Braids Fluoropolymer monofilament

Leak Detection Sensor
TraceTek Model No. TT-300-MSC-__-MC

Alarm Panel
Supply Voltage 120Vac, 15VA
Distance Indicator LCD indicates the distance (feet, meters, or zone #) from panel to leak/fault
LED Indicators Power, Alarm, Continuity
Audible Alarm 95 dB @ 2ft

Operating Temperature -22°F to 150°F
Electrical Conduit Connection ½" NPT (metal)
Auxiliary contact SPDT 10A @ 120Vac, resistive

Monitoring Panel
TraceTek Model No. TTB-xA-REL
|
|---Feet, meters, zone display

Preferred vendor, but not limited to;
Manufacture/Vendor Tracetek / Raychem
Other Vendors;
Manufacture/Model No. _____
1.
2.
3.

1. Approved _____ Date _____
2. Approved _____ Date _____
3. Approved _____ Date _____
4. Approved _____ Date
5. Approved _____ Date
6. Approved _____ Date

Stand alone Process Controller

Attachment CTRLR

Instrument No. CTRLR _ Area/Location N

Process Media
Liquid _____ Specific Gravity
Gasses _____
Vapors _____
Solids _____
Temperature °F Min °F Max °F
Pressure
Flow

GENERAL

This device is a Proportional, Integral, Derivative controller with voltage, current, or thermocouple inputs. It is used where the control of a parameter is to be within a narrow range. i.e. room temperature, fan static pressure.

Accuracy

Accuracy (Typical): 0.025% FS to 1.0% FS dependent on input (See spec sheet)
Display Accuracy: +- 1 digit
Acceptable inputs: Thermocouples, RTD, Current, Voltage

Control

Control Algorithms: PID, P with manual Reset, PI, PD with manual reset, On-off
Tuning parameters:
- Proportional Band: 0.1 to 999% of input range
- Integral: 1 to 999 seconds/repeat
- Derivative: 0 to 600 sec
- Manual Reset/Load Line: 0 to 100% output
- Cycle Time: 0.3 to 120 sec
- On-off Deadband: up to 15% of input range

Self Tuning of PID Values: Pretune, Adaptive tune
Overshoot Protection: Yes, user selected

Isolation: 500 Vac between all blocks; 50 V peak between Block 1 and Block 4
- Block 1: rocess variable
- Block 2: ouputs 1,2,and 4
- Block 3: communications, set of five digital inputs, output 3
- Block 4 remote setpoint
- No isolation from inputs/outputs within block

Input Filter: Single Pole Low pass, selectable 0 to 120sec
Calibration: Factory Calibrated, Self correcting for component aging, May be Field Calibrated.
Outputs: (5) available, (4) useable per controller. 0-20ma, 5A-120Vac Mechanical Relay, 1A-120Vac Triac Relay, DC logic module, Loop power supply module.
Retransmission of Output: Yes
Alarms: (2) software alarms
Digital Inputs: 5 external dry contact configurable as digital inputs.
Setpoint Selection: Keyboard, digital contact, Serial communication
Serial Communications: RS-485, baud rate up to 19200bps
Digital Displays: Upper: 5 digit, 0.6in Process variable
2nd Display: 9 character 0.25in alphanumeric
3rd Display: 9 character 0.25in alphanumeric

Enviroment

Power: 120Vac, 15VA, 60Hz

Preferred vendor, but not limited to;
Manufacture/Vendor POWERS / ADS Equipment

Other Vendors;
Manufacture/Model No. _____
1.
2.
3.

1. Approved _____ Date _____ 4. Approved _____ Date
2. Approved _____ Date _____ 5. Approved _____ Date
3. Approved _____ Date _____ 6. Approved _____ Date

PROCESS CONTROLLE

Instrument No. CTRLR _ Area/Location N

Process Media
Liquid _____ Specific Gravity
Gasses _____
Vapors _____
Solids _____
Temperature °F Min °F Max °F
Pressure
Flow

Ambient Temperature: 32 to 122°F
Relative Humidity: 10 to 90% non condensing
Noise Immunity: Common mode Rejection (process variable)-- >120dB
Normal mode Rejection (process variable)-- >80dB
AC line is double filtered and transient protected
Snubbers provided for each relay output

Construction
Case: Extrudes non-perforated black anodized aluminum with ABS plastic sleeve.
Bezel: Black plastic ABS
Keys: Silicone rubber with diffusion printed graphics
Nema Rating: front panel 4X

Security: Selectable
Memory Retention: Lithium Battery backup for approx. 10 years

¼ Din Process Controller
Powers Model No. 535-21150B0S00

Preferred vendor, but not limited to;
Manufacture/Vendor POWERS / ADS Equipment

Other Vendors;
Manufacture/Model No. _____
1.
2.
3.

1. Approved _____ Date _____ 4. Approved _____ Date
2. Approved _____ Date _____ 5. Approved _____ Date
3. Approved _____ Date _____ 6. Approved _____ Date

Stand Alone Process Controller

Attachment CTRLR2

Instrument Specifications Forms PROCESS CONTROLLEI

Instrument No. CTRLR2 Area/Location No

Process Media
Liquid _____ Specific Gravity
Gasses _____
Vapors _____
Solids _____
Temperature °F Min °F Max °F
Pressure
Flow

General Description
This device will control the supply air dampers of the make up fan to the desired setpoints of the operator. The control will be based on the difference between the individual area and the outside as well as the differences between the individual spaces.
The former can be accomplished by any Proportional-Integral-Derivative controller.
The latter can be accomplished by a lookup table within a PLC program.

Details
Inputs: Minimum of (4) four 4 - 20maDC signals from pressure sensors.
Minimum of (4) four 4 - 20 maDC signals for setpoints.
Minimum of (2) two input contacts rated 10A, 120Vac for fan on/off signals.

Outputs: Minimum of (4) four 4 - 20maDC signals for fan damper actuators.
Minimum of (2) two "dry" contacts rated 10A, 120Vac for fan on/off signal.
Minimum of (2) two "dry" contacts rated 10A, 120Vac for Hi/Lo alarm signal.

Display: Individual setpoints.
Percentage of output signal to each zone – based on 0-100% (4-20ma).

Alarms: Common Hi alarm for each of 4 inputs, limit value adjustable.
Common Lo alarm for each of 4 inputs, limit value adjustable.

Power: 120vac, or 24vdc.

The details for this controller are not finalized, and will be finalized during detailed design. The device maybe provided by a vendor.

Preferred vendor, but not limited to;
Manufacture/Vendor TBD

Other Vendors;
Manufacture/Model No. _____
1.
2.
3.

1. Approved _____ Date _____ 4. Approved _____ Date
2. Approved _____ Date _____ 5. Approved _____ Date
3. Approved _____ Date _____ 6. Approved _____ Date

Displays

Attachment DSPLY

Instrument No. DSPLY Area/Location N

PROCESS MEDIA

Liquid _____ Specific Gravity
Gasses _____
Vapors _____
Solids _____
Temperature °F Min 32°F Max 200 °F
Pressure
Flow

GENERAL

This device will display the value of a 4-20ma signal or a thermocouple mV signal.
It also has an alarm output contact which can be used for a hi or low alarm setpoint.

INDICATOR

Input Ranges: 0 - 20ma, 0 - 10 Vdc
Display Ranges: -999 to 9999
Min. Sensitivity: 1 count
Max. Sensitivity: 0.4uA/count; 200uV/count
Accuracy: 0.02% + 1 count
Repeatability: 1 count
Stability with Temperature: 1uV/ °C, zero; 0.01% rdg/ °C , span
Overload Protection: Power to ground: 1500 Vdc or Vac RMS
Across inputs (V+, V-): 250 Vdc or Vac
Across inputs (I+, I-): 150ma
Reading Rate: 2 per/s
Display: 4-digit LED, 0.56”
Operating Ambient: 5 to 45°C
Power: 115/230 Vac, switch selectable, 50-60hz

Alarm Relay Contact: 0.5A @ 120vac, non-inductive; form C SPDT

Omega Part No: Voltage/current: DP461-V
Thermocouple: DP461-TC

Preferred vendor, but not limited to;
Manufacture/Vendor OMEGA / OMEGA Technologies, Inc.

Other Vendors;
Manufacture/Model No. _____
1.
2.

1. Approved _____ Date _____ 4. Approved _____ Date
2. Approved _____ Date _____ 5. Approved _____ Date
3. Approved _____ Date _____ 6. Approved _____ Date

Flowmeter Indication Transmitter

Attachment FIT1

Instrument No. FIT 1 Area/Location No

Process Media
Liquid water Specific Gravity
Gasses
Vapors
Solids
Temperature °F Min 32°F Max 200 °F
Pressure 0-60 PSIG
Flow 0-50 GPM

GENERAL

This flowmeter is used to measure the flow of water into the mixing processes.

Flowmeter
Body Material 300 Series stainless steel
Flange Type ANSI class 150
Flange Material Carbon steel
Accuracy +-.075%
Power Required PLC supplied 24 VDC
Power Required Internal 2yr Lithium Battery
Output Signal 4 to 20 maDC Analog
Allowable Loopload 500 OHMs max.
Amplifier Mounting Top mounted integral
Electrical Connections 1/2" NPT for conduit
Totalizer Display 0.3" LCD , 8 digit
Rate Display 0.35" LCD , 6 digit
Operating Limits Pressure - PSI at 75°F temperature - 0 to 200°F

Flow element
Sponsler Model - No. SP(**)-CS-PHL-A-4X
2 wire transmitter indictator
Sponsler Model - No. IT275N
20ft of interconnecting cable.

** is the pipe diameter.

Preferred vendor, but not limited to;
Manufacture/Vendor SPONSLER / Brett-Ross, Inc.
Other Vendors;
Manufacture/Model No.
1.
2.
3.

1. Approved Date 4. Approved Date
2. Approved Date 5. Approved Date
3. Approved Date 6. Approved Date

Flowmeter Indication Transmitter

Attachment FIT2

Instrument Specifications Forms **FLOWMETE**

Instrument No. FIT 2 **Area/Location Nor**

Process Media
Liquid water **Specific Gravity**
Gasses _____
Vapors _____
Solids _____
Temperature °F Min 32°F **Max 200 °F**
Pressure 0-150 PSIG
Flow 3-30 GPM

This flowmeter is used to measure the flow of water into the mixing container of the In-Container Mixer (TT-03).

Flowmeter

Design Type: Turbine, nylon
Body Material Nylon
Fitting Type ISO Female 1 inch diameter
Accuracy +/-5.0%
Power Required 2 AAA Batteries
Totalizer Display 0.5" LCD , 4 digits

Operating Limits

Pressure – 150 PSIG
Temperature - 14 to 130°F

Preferred vendor, but not limited to;
Manufacture/Vendor PDI

Other Vendors;
Manufacture/Model No. _____
1.
2.
3.

1. Approved _____ Date _____ 4. Approved _____ Date
2. Approved _____ Date _____ 5. Approved _____ Date
3. Approved _____ Date _____ 6. Approved _____ Date

Flowmeter Indication Transmitter

Attachment FIT3

Instrument No. FIT 3 Area/Location No

Process Media
Liquid Chemicals Specific Gravity
Gasses
Vapors
Solids
Temperature °F Min 32°F Max 200 °F
Pressure 0-60 PSIG
Flow 0-26 GPM

GENERAL

This flowmeter is use to measure the flow of chemical reagent feeds

Flowmeter
Body Material Stainless Steel
Process Connection
Inlet: 1-1/2”
Outlet: 1-1/4”
Flowrate 2.5-26.5 gpm
Accuracy +-1%
Power Required Internal Battery
Output Signal 4 to 20 maDC Analog
Electrical Connections 1/2" NPT for conduit
Totalizer Display 0.3” LCD , 7 digit (resetable)
Rate Display 0.35” LCD , 7 digit
Operating Limits Pressure - 85 PSI
Temperature - 176°F max

Flow element
Flux Model - No. Liquid Meter FM C

Preferred vendor, but not limited to;
Manufacture/Vendor FLUX/Wagner Process Equipment
Other Vendors;
Manufacture/Model No.
1.
2.
3.

1. Approved Date 4. Approved Date
2. Approved Date 5. Approved Date
3. Approved Date 6. Approved Date

Hand Switch

Attachment HS

Instrument No. HS Area/Location No

Process Media
Liquid _____ Specific Gravity
Gasses _____
Vapors _____
Solids _____
Temperature °F Min °F Max °F
Pressure _____
Flow _____

GENERAL

The following are all hand switches used to control the individual component of the processes. The Table reference HS as the type, but by looking at the description and the range, one will determine which is the appropriate switch.

ON/OFF HAND SWITCH

Style: Maintained
Bezel: Chrome
Operator Type: Black, Knob
Diameter: 22.5 mm
Contacts: (2) DPDT
Contact Ratings: 0-600Vac, 0-600Vdc
Contact Current Continuous Ratings: 10Aac, 2.5Adc
Contact Current Break Ratings: 60-12Aac, 0.55-0.1Adc
CH Part No. E22X51C

EMERGENCY STOP HAND SWITCH
Style: Push to operate, Twist to Release
Bezel: Chrome
Button Color: RED, non-illuminated
Button Diameter: 40 mm
Contacts: (1) DPDT
Contact Ratings: 0-600Vac, 0-600Vdc
Contact Current Continuous Ratings: 10Aac, 2.5Adc
Contact Current Break Ratings: 60-12Aac, 0.55-0.1Adc
CH Part No. E22LL2C

HAND/OFF/AUTO HAND SWITCH

Style: Maintained
Bezel: Chrome
Operator Type: Black, Knob
Diameter: 22.5 mm
Contacts: (2) DPTT
Contact Ratings: 0-600Vac, 0-600Vdc
Contact Current Continuous Ratings: 10Aac, 2.5Adc
Contact Current Break Ratings: 60-12Aac, 0.55-0.1Adc
CH Part No. E22XH1D

All Switch Will Require a Legend Plate. Contact Distributor for Ordering Details.

Preferred vendor, but not limited to;
Manufacture/Vendor Cutler Hammer / Platt

Other Vendors;
Manufacture/Model No. _____
1.
2.
3.

1. Approved _____ Date _____ 4. Approved _____ Date
2. Approved _____ Date _____ 5. Approved _____ Date
3. Approved _____ Date _____ 6. Approved _____ Date

Level Element Transmitter

Attachment LET

Instrument No. LET Area/Location No

Process Media
Liquid Water, Slurry Specific Gravity
Gasses _____
Vapors _____
Solids _____
Temperature °F Min _____ Max Ambient
Pressure _____
Flow _____

GENERAL

This device will transmit a 4-20ma signal which is proportional to the level of the liquid in the vessel being measured.

Level Sensor
Output 4 -10ma (alarm state) 14-20ma (normal state)
Supply Voltage 15-28Vdc
Temperature Range -40 to 140°F Ambient
Differential: Conducting materials 1/16"
Differential: Insulating materials 1"
Output Isolation Min 1000Vsignal wires to sensor
Response Time 20 msec (standard), 0-90sec optional
RFI Protection 5W field @ 27MHz, 150Mhz, or 450Mhz , 5 feet from exposed sensing element, cable, power line.
Allowable Static Discharge to Sensor 10A (standard)
Sensor Element Connection 1" NPT
Sensor Material 316SS
Pressure 500psi @ 300 °F
Pressure 200psi @ 450 °F
Electrical Connection ¾" NPT

LCT-Two-Wire Point Level Control
Drexelbrook Model No. 506-6200-22 series

Preferred vendor, but not limited to;
Manufacture/Vendor Drexelbrook / Brett-Ross

Other Vendors;
Manufacture/Model No. _____
1.
2.
3.

1. Approved _____ Date _____ 4. Approved _____ Date
2. Approved _____ Date _____ 5. Approved _____ Date
3. Approved _____ Date _____ 6. Approved _____ Date

Level switch

Attachment LS

Instrument No. LS Area/Location No

Process Media
Liquid Water, Slurry Specific Gravity
Gasses _____
Vapors _____
Solids _____
Temperature °F Min _____ Max ___
Pressure _____
Flow _____

General
This device will operate its contacts when the measured liquid covers the light prism. The operator is alerted to a full container.

Sensor
Pulsed, infrared light excitation sensor. Impervious to ambient light conditions
Supply Voltage 12 - 36 Vdc
Current Output Dry: 4 ma
Wet: 20 ma
Material PP
Cable Length 8 feet
Accuracy +/- 1 mm (in water)
Repeatability +- 0.5 mm
Length 4.5 inches
Diameter 1.05 inches
Fitting ¾" NPT
Pressure Rating 150 psi @ 25°C
Temperature Rating 90°C

Sensor
Omega Model No. LVF-212

Preferred vendor, but not limited to;
Manufacture/Vendor OMEGA / OMEGA Engineering Inc.
Other Vendors;
Manufacture/Model No. _____
1.
2.
3.

1. Approved _____ Date _____
2. Approved _____ Date _____
3. Approved _____ Date _____
4. Approved _____ Date
5. Approved _____ Date
6. Approved _____ Date

Diferential Pressure Indicating Guage

Attachmnet PDI-G

Instrument No. PDI-G Area/Location No

Process Media
Liquid Water Specific Gravity
Gasses Air, N2
Vapors _____
Solids _____
Temperature °F Min 40 Max 100
Pressure 0-100dpsi
Flow

PRESSURE GAUGES

1. Type: Direct Reading X 3-15 LB Receiver _____ Other
2. Mounting: Surface X Local _____ Flush
3. Dial: Diameter 4 ½" Color
4. Case: Cast Iron _____ Aluminum X Phenol _____ Other
5. Ring: Screwed X Ringed _____ Slip _____ Other
6. Blow-out Protection: Nome _____ Back ____ Disk _____ Solid Front ____ Other
7. Lens: Glass X Plastic
8. Options: Sylphon _____ Material _____ Snubber _____ Pressure Limit Valve
   Movement Damping
9. Nominal Accuracy Required +-2% of full scale
10. Press. Element: Bourdon X Bellows _____ Other
11. Element MTL: Bronze X Steel _____ SS _____ Other
12. Socket MTL: Bronze X Steel _____ SS _____ Other
13. Connection-MPT: 1/4 in. X 1/2 in. _____ Other _____ Bottom X Back
14. Movement: Bronze _____ SS ____ Nylon _____ Other Bronze
15. Diaphragm Seal: MFG _____ Type _____ Wetted Part MTL _____ Other MTL ___ Fill Fluid X
    Process Conn. _____ Gage Conn.

Ashcroft Model No. 45-1125A- A-02L-xxx-xxxx

Preferred vendor, but not limited to;
Manufacture/Vendor ASHCROFT / Sea-Port Controls, Inc.
Other Vendors;
Manufacture/Model No. _____
1.
2.
3.

1. Approved _____ Date _____
2. Approved _____ Date _____
3. Approved _____ Date _____
4. Approved _____ Date
5. Approved _____ Date
6. Approved _____ Date

Diferential Pressure Indicating Guage

Attachmnet PDI-G2

Instrument Specifications Forms PRESSURE DIFFERENTIAL INDICATOI

Instrument No. PDI-G2 Area/Location No

Process Media
Liquid _____ Specific Gravity
Gasses _____
Vapors _____
Solids _____
Temperature °F Min _____ Max
Pressure
Flow

SWITCH - PRESSURE DIFFERENTIAL

Set Point 8 inches
Dead Band One pointer width less than 1% of full scale.
Contacts Normally closed 10 AMPS - 110 VAC - 60 HZ
Ambient temperature Range 20°F to 120°F
Rated Pressure 25 PSIG total pressure on either side of diaphram
Gage Connections 1/8" NPT
Power Required 110 VAC - 50/60 HZ
Conduit opening 3/4" conduit
Finish Case exterior in baked, dark grey hammererioid
Weight 4 Pounds
Mounting Local
Gage Face Minor divisions 0.50
Set Point Adjustment Front knobs
Face Material Clear plastic "O" ring seal
Bezel Screw ring
Pointer Stops Molded rubber
Zero Adjustment Front face area

Dwyer Model Number 3020

Preferred vendor, but not limited to;
Manufacture/Vendor DWYER; Branom Instruments
Other Vendors;
Manufacture/Model No. _____
1.
2.
3.

1. Approved _____ Date _____
2. Approved _____ Date _____
3. Approved _____ Date _____
4. Approved _____ Date
5. Approved _____ Date
6. Approved

Difer~~r~~ential Pressure Indicating G~~u~~auge

Attachm~~n~~ent PDI-G3

Instrument No. PDI-G3 Area/Location No

Process Media
Liquid _____
Specific Gravity_____
Gasses _____
Vapors _____
Solids _____
Temperature °F Min _____ Max ___
Pressure _____
Flow _____

GENERAL

This pressure gauge is used to monitor differential pressures mainly for ventilation.

Pressure differential
Ambient temperature Range 20°F to ~~120~~140°F
Rated Pressure -20 Hg. To 15 psig, overprotection at 25 psig
Gauge Connections 1/8" NPT, with rubber tubing adapters
Finish Die case aluminum. Exterior is baked, dark grey hammerloid
Accuracy +- 2% f.s.
Display Range Depended on unit selected, refer to P&ID Tables.

Gauge Face Minor divisions 0.50
Face Material Clear plastic "O" ring seal
Bezel Screw ring
Pointer Stops Molded rubber
Zero Adjustment Front face area

Accessories: 3-way vent valve.

Dwyer Model Number 2000 series, A-310A

Comment [SS1]: Why was this change made? Justify this as part of this mod.

Comment [BN2R1]: Info. came directly from mfg. product data info. The old no. was based off of the mfg. info. over 15 years old.

Preferred vendor, but not limited to;
Manufacture/Vendor DWYER; Branom Instruments
Other Vendors;
Manufacture/Model No. _____
1.
2.
3.

1. Approved _____ Date _____
2. Approved _____ Date _____
3. Approved _____ Date _____
4. Approved _____ Date
5. Approved _____ Date
6. Approved _____ Date

Diferential Pressure Switch Lo

Attachmnet PDS

Instrument No. PDS Area/Location N

Process Media
Liquid _____ Specific Gravity
Gasses _____
Vapors _____
Solids _____
Temperature °F Min _____ Max
Pressure
Flow

General
This switch will operate its contacts when the differential pressure passes the adjustable setpoint. The signal is used to alarm or control a process.

SWITCH - PRESSURE DIFFERENTIAL

Operating Pressure Range 4 to 5 inches W.C.
Set Point 8 inches
Switch Range 0 to 20 inches W.C.
Dead Band One pointer width less than 1% of full scale.
Contacts Normally closed 10 AMPS - 110 VAC - 60 HZ
Ambient temperature Range 20°F to 120°F
Rated Pressure 25 PSIG total pressure on either side of diaphram
Gage Connections 1/8" NPT
Power Required 110 VAC - 50/60 HZ
Conduit opening 3/4" conduit
Finish Case exterior in baked, dark grey hammererioid
Weight 4 Pounds
Gage Face 0 to 20 inches W.C. 4 inch diameter direct reading
Mounting Local
Gage Face Minor divisions 0.50
Set Point Adjustment Front knobs
Face Material Clear plastic "O" ring seal
Bezel Screw ring
Pointer Stops Molded rubber
Zero Adjustment Front face area

Manufacture DWYER
Model Number 3020
Pressure Range 0 to 20 inches W.C.

Preferred vendor, but not limited to;
Manufacture/Vendor DWYER; Branom Instruments
Other Vendors;
Manufacture/Model No. _____
1.
2.
3.

1. Approved _____ Date _____
2. Approved _____ Date _____
3. Approved _____ Date _____
4. Approved _____ Date
5. Approved _____ Date
6. Approved

Differential Pressure Transmitter

Attachment PDT

Instrument No. PDT Area/Location No

Process Media
Liquid _____ Specific Gravity
Gasses _____
Vapors _____
Solids _____
Temperature °F Min _____ Max
Pressure _____
Flow _____

GENERAL

This device is used to measure the differential pressure between a room and outside environment. The signal is used to control the makeup air to the room.

Sensor
Accuracy +-2%of FS

Ambient temperature Range 20°F to 120°F
Rated Pressure 35 PSIG total pressure on either side of diaphram
Process Connections 1/8" NPT Female

Transmitter Output 4-20madc
Transmitter Power Input 13-35Vdc, 38ma consumption
Loop Resistance 0-1000ohms
Span and Zero Adjustments Multi-turn Potentiometers, External
Conduit opening 3/4" conduit

Dwyer Model Series Number 603A

Preferred vendor, but not limited to;
Manufacture/Vendor DWYER; Branom Instruments
Other Vendors;
Manufacture/Model No. _____
1.
2.
3.

1. Approved _____ Date _____
2. Approved _____ Date _____
3. Approved _____ Date _____
4. Approved _____ Date
5. Approved _____ Date
6. Approved _____ Date

Differential Indicating Guage

Attachment PI-G

Instrument No. PI-G Area/Location No

Process Media
Liquid Water Specific Gravity
Gasses Air, N2
Vapors _____
Solids _____
Temperature °F Min 40 Max 100
Pressure 0-100psi
Flow

PRESSURE GAUGES

1. Type: Direct Reading X 3-15 LB Receiver _____ Other
2. Mounting: Surface X Local ____ Flush
3. Dial: Diameter 2 ½" to 4 ½" Color
4. Case: Cast Iron _____ Aluminum _____ Phenol _____ Other SS
5. Ring: Screwed X Ringed _____ Slip _____ Other
6. Blow-out Protection: Nome _____ Back ____ Disk _____ Solid Front ____ Other
7. Lens: Glass X Plastic
8. Options: Sylphon _____ Material _____ Snubber _____ Pressure Limit Valve
   Movement Damping
9. Accuracy +-1% of full scale
10. Press. Element: Bourdon X Bellows _____ Other
11. Element MTL: Bronze _____ Steel _____ SS _____ Other Beryllium Copper
12. Socket MTL: Bronze _____ Steel _____ SS _____ Other Bronze
13. Connection-MPT: 1/4 in. X 1/2 in. ____ Other ____ Bottom X Back
14. Movement: Bronze _____ SS ____ Nylon _____ Other Various Metals
15. Diaphragm Seal: MFG _____ Type _____ Wetted Part MTL _____ Other MTL ____ Fill Fluid
    Process Conn. _____ Gage Conn.

Ashcroft Model No. 45-1220-S-02L-xxx-xxx

Preferred vendor, but not limited to;
Manufacture/Vendor ASHCROFT / Sea-Port Controls, Inc.
Other Vendors;
Manufacture/Model No. _____
1.
2.
3.

1. Approved _____ Date _____
2. Approved _____ Date _____
3. Approved _____ Date _____
4. Approved _____ Date
5. Approved _____ Date
6. Approved _____ Date

Photo-Ionization Detector

Attachment PID

Instrument No. PID Area/Location No

Process Media
Liquid _____ Specific Gravity
Gasses _____
Vapors _____
Solids _____
Temperature °F Min 65 Max 100
Pressure -10 in wg
Flow _____

General
This device shall detect vapor fumes which have passed the 1st carbon bank filter, and alarm once the fumes detected reach a determined setpoint. The purpose of the device is to alert the operators when the 1st carbon filter is loaded and needs to be replaced. The device may be a continuous monitor or if approved by permitting authority, a scheduled sampling procedure utilizing both detectors and grab samples.

DETAILS

1. Instrument Range 0-25%
2. Nominal Accuracy Required +-2% of span
3. Display 0.25" digits (minimum); or 4-20maDC signal
4. Process Connections 1/8" npt
5. Vapor Fumes Detected (as determined by Focus Environmental Engineering)
6. Alarm Output Form "C" contact for remote alarm; 10A, 120Vac resistive
7. Input Power 120vac

Preferred vendor, but not limited to;
Manufacture/Vendor _____
Other Vendors;
Manufacture/Model No. _____
1.
2.
3.

1. Approved _____ Date _____
2. Approved _____ Date _____
3. Approved _____ Date _____
4. Approved _____ Date
5. Approved _____ Date
6. Approved _____ Date

Pilot Alarm Lights

Attachment Pilot

Instrument No. PILOT Area/Location No

Process Media
Liquid _____ Specific Gravity
Gasses _____
Vapors _____
Solids _____
Temperature °F Min °F Max °F
Pressure _____
Flow _____

GENERAL

This device will alert an operator if a alarm condition or an event has occurred. This alert is visual only.

Pilot light

LENS

Bezel: Chrome
Press to Test: YES
Diameter: 25 mm
Lens Color: Red, Green, Blue, Amber
CH Part No. E22N2, E22N3, E22N6, E22N9

Press-to-test Light
Input Voltage: 120vac, 60hz
CH Part No. E22TL1C

Lamp Voltage: 6 V T3-1/4 Bayonet Base Lamp
CH Part No. 755

Standard Light
Input Voltage: 120vac, 60hz
Cutler-Hammer Part No. E22TL1

Lamp Voltage: 6 V T3-1/4 Bayonet Base Lamp
Cutler-Hammer Part No. 755

Preferred vendor, but not limited to;
Manufacture/Vendor Cutler Hammer / Platt

Other Vendors;
Manufacture/Model No. _____
1.
2.
3.

1. Approved _____ Date _____ 4. Approved _____ Date
2. Approved _____ Date _____ 5. Approved _____ Date
3. Approved _____ Date _____ 6. Approved _____ Date

Pilot Alarm Lights

Attachment Pilot 2

Instrument No. PILOT2 Area/Location No

Process Media
Liquid ____ Specific Gravity
Gasses _____
Vapors _____
Solids _____
Temperature °F Min _____ Max ___
Pressure _____
Flow _____

General
This device will alert the Operator when liquid contacts sensor. Energize output relay which could be used to initiate an pump interlock.

Pilot Light
Supply Voltage 120 Vac, 0.25 A
Indicators Amber (Hi intensity strobe lamp)
Sensor Supply Circuit 13Vdc (nominal), 1 watt
Sensor Trigger Pt. Dry < 12 mA, Wet > 12 mA.
Relay Output Isolated SPDT, Form C, 12 A
Relay Configuration NO/NC, Selectable
Time Delay 0.15 to 60 sec, adjustable

Max. Temperature 158°F
Process Conduit Connection ¾" NPT
Electrical Conduit Connection ½" NPT
Enclosure Material PP, flame retardant
Dimensions 2.8w x 5.5h"

OMEGA Model No. LVCN-100

Preferred vendor, but not limited to;
Manufacture/Vendor OMEGA / OMEGA Engineering Inc.

Other Vendors;
Manufacture/Model No. _____
1.
2.
3.

1. Approved _____ Date _____
2. Approved _____ Date _____
3. Approved _____ Date _____
4. Approved _____ Date
5. Approved _____ Date
6. Approved _____ Date

Pizo Alarm Horns

Attachment Pizo

Instrument No. PIZO Area/Location No

Process Media
Liquid _____ Specific Gravity
Gasses _____
Vapors _____
Solids _____
Temperature °F Min °F Max °F
Pressure _____
Flow _____

General
This device is an alarm buzzer. It is used on most all alarms to alert operators to a problem condition.

Audible alarm
Input Voltage: 120vac
Surge Voltage: 20% over rated voltage applied for less than one minute
Operating Ambient -30 to 65 °C
Life Expectancy: 5 years
Humidity: 95% at 40°C, after allowing to dry
Sound Level: 95dB @ 2900Hz
Tone type: continuous, fast pulse, slow pulse, or warble

Omega Part No. 70A-1

Preferred vendor, but not limited to;
Manufacture/Vendor Omega / Omega Technologies, Inc.

Other Vendors;
Manufacture/Model No. _____
1.
2.
3.

1. Approved _____ Date _____ 4. Approved _____ Date
2. Approved _____ Date _____ 5. Approved _____ Date
3. Approved _____ Date _____ 6. Approved _____ Date

Temperature Element Type K

Attachment TE-K

Instrument No. TE-K Area/Location No

PROCESS MEDIA

Liquid Water, Air Specific Gravity
Gasses _____
Vapors _____
Solids _____
Temperature °F Min 32°F Max 400°F
Pressure _____
Flow _____

GENERAL
The following is a description of a thermocouple used in various locations to determine the temperature. There is also a description of the extension grade wire required, as well as a thermocouple if the environment requires one.

Temperature element and thermowell
Element:

Type		: "K" Chromega - vs - Alomega
Sheath Material		: 304SS
Sheath Construction		: Closed end protection tube (ungrounded)
Sensor Length use "U", "T", "E" below		:
Temperature Range		: 2499° F
Ice Point Resistance		:
Leadwires - Receptacle		: Standard quick disconnect
Leadwires - Bayonet Lock		:
Leadwires - Other		: Requires KX type extension

Thermowell: Use Test plug

Construction		: SS
Bore O.D.		: ½" NPT
Bore I.D.		:
Process Connection		:
Sensor Connection		:
Union Required		:
Insertion Dimension	"U"	: As required for accuracy (4")
Lagging Dimension	"T"	: None
Extension Dimension	"E"	:
Mounting		: ½" Tee

Failsafe Operation: Upscale burnout

```
                                  +-------+
==========[+++]-------{|}---|     |
                                  +-------+
          "U"    "T"    "E"
```

1/8" O.D. ungrounded thermocouple assembly type "K", with solid pin plugs, and wire clamp bracket.
Omega Part No. KQSS-14U-6

Temperature Compression Fitting with Stainless Steel Ferrule
Omega Part No. SSLK-14-14,

T/C Extension Wire
Omega part No. EXFF-K-20TWSH

Preferred vendor, but not limited to;
Manufacture/Vendor Omega; Omega Technologies Corp..
Other Vendors;
Manufacture/Model No. _____
1.
2.
3.

1. Approved _____ Date _____ 4. Approved _____ Date
2. Approved _____ Date _____ 5. Approved _____ Date
3. Approved _____ Date _____ 6. Approved

Temperature Indicating Guage

Attachment TI-G

Instrument No. TI-G Area/Location No

Process Media
Liquid _____ Specific Gravity
Gasses _____
Vapors _____
Solids _____
Temperature °F Min °F Max °F
Pressure _____
Flow _____

GENERAL

The following temperature gauge is used to measure the temperature of various air streams, liquids, and gases. A thermowell is also specified—use when conditions require.

Temperature indicator

Temperature Range 0°F to 200°F
° per Division 2
Connection Size ½" NPT
Connection Location EveryAngle
Stem Length 2 ½" - 12"
Over Temperature Limit 50% of FS
Accuracy (+) (-) 1% of FS
Dial Construction Hermetically Sealed, Heavy Duty Glass Dial, SS
Adjustment External
Tag SS

Bimetal Thermometer, Series EI, Grade A (1%)
Ashcroft Model No. Code 30-EI-60-E-xxx-0/200 °F-XNH
length

THERMOWELL

Type Threaded Stepped Shank
Bore Size 0.26in.
Process Connection ¾"
Material 304 SS

Thermowell
Ashcroft Model No. 75-W-xxxx-[blank]-[blank]-R-T-260-C-F-600
length

Preferred vendor, but not limited to;
Manufacture/Vendor Ashcroft / Sea-Port Controls, Inc.

Other Vendors;
Manufacture/Model No.
1.
2.
3.

1. Approved _____ Date _____
2. Approved _____ Date _____
3. Approved _____ Date _____
4. Approved _____ Date
5. Approved _____ Date
6. Approved

Event Timer

Attachment Timer

Instrument No. TIMER Area/Location No

Process Media
Liquid _____ Specific Gravity
Gasses _____
Vapors _____
Solids _____
Temperature °F Min 65 Max 100
Pressure _____
Flow _____

GENERAL

This device will primarily be used to operate a mixer for a time period. The time period is adjustable from 1 – 10 minutes.

TIMER

Input Power 120vac
Power Consumption 7.5VA
Enclosure impact resistance, dust resistant
Terminals
Temperature Range -22 F to 131 F

CONTACTS

Rating Inductive: 5A continuous, 1.5A break, 15A continuous.
Resistive: 5A continuous, 5A break, 5A continuous.
Number DPDT (2 form C)
Material Silver Cadmium Oxide
Dielectric Withstand NEMA C 300

TIMING

Mode of Operation On Delay
Repeat Accuracy +-0.3%. +-10msec
Timing Change +-0.5% change over full voltage range
+-0.5% change over full temperature range
Scale tolerance +-5% at full scale
Reset Time 100msec. Minimum

Allen-Bradley Model No.
Relay: 700-HRM12ta17
8 pin Base: 700-HN125

Preferred vendor, but not limited to;
Manufacture/Vendor Allen-Bradley Co.

Other Vendors;
Manufacture/Model No. _____
1.
2.
3.

1. Approved _____ Date _____
2. Approved _____ Date _____
3. Approved _____ Date _____
4. Approved _____ Date
5. Approved _____ Date
6. Approved _____ Date

Variable Frequency Driver

Attachment VFD

Instrument No. VFD Area/Location Non

Process Media
Liquid Water Specific Gravity
Gasses
Vapors
Solids
Temperature °F Min Max Ambient
Pressure
Flow

GENERAL

The following is the description of the VFD of choice at the ATG Richland, WA site. The device has many functions other than controlling the speed of a motor such as internal hi current alarms and contacts.

VFD
Maximum Output Voltage 480V
Adjustable Ramp 0.1 - 3600 secs
Quick Stop 1 sec depending on inertial
Adjustable DC Injection Braking 0 - 60 sec
Switching Frequency at Output Unlimited, (switching at high loads may cause overload or trip)
Maximum Wire Length to Motor 1000ft
Typical Motor shaft for 4 pole motor HP **
Maximum Input Current: Continuous (3ph) A**
Intermittent (3ph) A**
Displacement Power Factor 0.9/1.0
Efficiency 96% @ maximum output
Switching Frequency at Line Input 5 times/min
Electrical Noise (with shielded motor cables) RFI compliance with EN 55011 class A & B Group 1 with RFI module option.

Maximum Operating Ambient Temp -10°C to 45°C
Maximum Relative Humidity <75% @ 21°C annual average. Max 95% at 25°C for 30 days per year
Thermal Protection During Operation Built in Thermostat stops the Drive
Protected Chassis YES
Enclosure NEMA 12
Analog Control Inputs 0-10 Vdc, 2-10 Vdc, 1-5 Vdc, 0-20ma, 4-20ma
Digital Control Inputs 8 inputs; Programmable (Reset, start, latch start, stop, reversing, start reverse jog, jog freeze, digital speed change, multiple menu select, thermistor

Analog/Digital Output signals 2 outputs: Analog -programmable for 14 conditions; or Digital - programmable for 13 conditions.

Relay Output Signals 2 outputs; programmable for indication of 16 operational conditions via relay contact output
Speed Regulation Open Loop: +- 0.5 % of rated speed with 10-90% load variation (6-60hz)
Closed Loop: +- 0.1 % of rated speed with 10-90% load variation (6-60hz)

20 HP Drive
Danfoss Model - No. VLT-3022
NEMA 12 and RFI Filter
Danfoss Model - No. 175H4422

Note: Verify the motor size before choosing a model.
** varies with motor size.

Preferred vendor, but not limited to;
Manufacture/Vendor DANFOSS/Monitor and Process Control

Other Vendors;
Manufacture/Model No.
1.
2.
3.

1. Approved Date 4. Approved Date
2. Approved Date 5. Approved Date
3. Approved Date 6. Approved Date

Weigh Scale Element and Indicating Transmitter

Attachment WEWIT

Instrument No. WE/WIT Area/Location No

Process Media
Liquid _____ Specific Gravity
Gasses _____
Vapors _____
Solids _____
Temperature °F Min _____ Max Ambient
Pressure _____
Flow _____

GENERAL
The following scale is used to measure the weight of the container arriving at the site, the amount of material added to a blender, the weight of the container leaving the site for disposal, return to generator.
The display can be programmed to alarm at a setpoint weight.

SCALE
Display: 0.55" 7 digit, decimal available on each digit
Status Display: LB, Kg, ROC, Accum., Gross, Net, Tare, Keyed Tare
Internal Resolution: Selectable 740,000
Display Resolution: Selectable up to 100,000dd
Measurement rate: 20 measurements/ sec
System Linearity: within 0.01% of FS
Calibration method: Software
Zero Stability: 140uV/ °C
Span Stability: 3.5ppm/ °C
Excitation Voltage: 10 +-0.5 Vdc, 16 x 350ohm Load Cells
Analog Filter: Software Selectable
Digital Filter: Software Selectable
Sense Amplifier: Differential Amplifier with 6 wire sensing
RFI Protection: Signal, excitation, and sense lines protected to 455Mhz

Output
Analog: 4-20ma Digital: 4 TTL
Inputs
Digital: (3) TTL or Switch Closure
with 4 channel relay rack (3) relays, and start-stop switch
CDP Port: RS-232, RS-485
Printer Port: YES
Power Input: 120 or 240 Vac
Frequency: 50 or 60 Hz
Operating Temperature: 14 to 104 °F
Enclosure Finish: Nema 4 zinc die cast
Load Deck: 36" x 36" smooth SS

Model No. IQ810

Preferred vendor, but not limited to;
Manufacture/Vendor RiceLake Weighing Systems/Powell Scales
Other Vendors;
Manufacture/Model No. _____
1.
2.
3.

1. Approved _____ Date _____
2. Approved _____ Date _____
3. Approved _____ Date _____
4. Approved _____ Date
5. Approved _____ Date
6. Approved

Level Element Transmitter

Attachment LET2

Instrument No. LET2 Area/Location No

Process Media
Liquid Yes Specific Gravity
Gasses _____
Vapors _____
Solids Yes
Temperature °F Min _____ Max Ambient
Pressure _____
Flow _____

GENERAL

This device will transmit a 4-20ma signal which is proportional to the level of the material inside the vessel being measured.

Level Sensor
Accuracy 0.25% full scale.
Repeatability 0.125”
Span 24 ft
Range 24.5 ft
Dead Band hysteresis 6 in
Signal Output 4 -20ma, 12A 120/240V relay contact
Supply Voltage 14-36Vdc
Temperature Range -5 to 140°F Ambient
Temperature Compensation Automatic overrange of sensor operating temp.
Max. Pressure Rating 30 psi @ 78F; derate 3 psi per deg F above 77 F.
Beam Angle Conical 8deg
Sensor Material PVDF
Sensor housing 2 x 2.2”
Electrical Connection cable gland-grip

Omega Model No. LVU-301

Preferred vendor, but not limited to;
Manufacture/Vendor Omega Engineering Inc.

Other Vendors;
Manufacture/Model No. _____
1.
2.
3.

1. Approved _____ Date _____ 4. Approved _____ Date
2. Approved _____ Date _____ 5. Approved _____ Date
3. Approved _____ Date _____ 6. Approved _____ Date

Technical Specification

Section 15132

Mixers

PART 1 – GENERAL

1.1 WORK INCLUDED
A. This Section includes the work necessary to furnish and install in-tank agitators and tank-type mixers.

1.2 RELATED WORK
A. This Section shall be used in conjunction with the following other specifications and related Contract Documents to establish the total requirements for the referenced pumps.
1. Section 15000 – General Installation Requirements
2. Data Sheets at the end of this Section

CAUTION! Use of this Section without including all of the above listed items will result in omission of basic requirements.

B. In the Event of conflict regarding requirements for the referenced mixers between this Section and any other Section, the provisions of this Section shall govern. In the event of a conflict between this Specification and the attached data sheet, the data sheet shall govern.

1.3 QUALITY CONTROL
A. All engineering, design, fabrication, and testing shall conform to the latest edition of the following standards, codes and specifications in effect at the time of tender:
1 Anti-Friction Bearing Manufacturers Association (AFBMA)
2 American Gear Manufacturers Association (AGMA)
3 American National Standards Institute (ANSI)
4 National Electrical Manufacturers Association (NEMA)
5 Occupational Safety and Health Administration (OSHA)
6 Underwriters Laboratories (UL)
7 Electrical Code.

B. In the event of a conflict between referenced standards, the more stringent shall control. If vendor cannot readily determine the more stringent, he shall immediately contact the Owner.

1.4 SUBMITTALS
A. Provide the following:
1. All information required in this specification.
2. Sufficient engineering definition for technical evaluation, including catalog data, etc.
3. Dimensional outline and arrangement drawings.
4. Weight of each item.
5. Motor and shaft horsepower.

PART 2 -- PRODUCTS

2.1 GENERAL
A. Bidder shall be responsible for all installation and start-up.
B. It is the intent of this specification that the equipment be the manufacturer's standard design, modified as required, and suitable for application and capacities specified.
C. Vendor may present alternatives, with justification, that provide improved design, reduced cost, or increased operating efficiency. Such alternatives shall be completely defined in vendor's proposal.
D. Coatings:
1. All exterior ferrous surfaces of equipment shall be primed and finish painted with the manufacturer's standard rust-resistant system. Finish color shall be the manufacturer's standard.
2. Machine-finished parts that are not manufactured of corrosion-resistant materials and are not painted, shall be given a heavy coat of rust inhibiting compound that can be easily removed by use of solvents and hand wiping. Vendor shall specify an effective solvent.
E. Testing:
1. If testing is necessary it will be indicated on the agitator data sheet.
2. A record of tests performed, including tests required for compliance with

regulatory or industry codes, shall be made available to Purchaser on his request.

2.2 IN-TANK AGITATORS

A. The following items shall be provided by the Bidder with the agitators as a minimum:
   1. Motors
   2. Gear reduction units.
   3. Couplings and/or belt drives.
   4. Drive Guards
   5. Installation of all motors, drives and guards
   6. Structural supports
   7. Motor starters

B. Design Requirements
   1. Shaft-Turbine assemblies shall operate at less than 65 percent of shaft critical speed.
   2. Agitators shall be designed to produce the specified level of agitation with minimum power consumption.
   3. Safety guards and shields shall be furnished for all exposed rotating parts. In addition to the local regulations and requirements, all guards shall conform to the requirements of OSHA.
   4. Speed reducers shall be designed and fabricated according to AGMA standards.
   5. Drivers shall not be overloaded at any point along curve when operating at the maximum speed obtained by changing gears.
   6. Drivers and speed reducers shall have permanently attached rotation arrows located so that the operator can easily determine the correct rotation of the agitator shaft.
   7. Gear tooth ratios shall not be integral multiples of one another.
   8. Turbine assemblies shall be removable from the shafts, but the blades shall not be removable from the hubs.
   9. Turbines and propellers shall be keyed or locked to the shafts to prevent any separation from the shafts.
   10. Materials of construction are shown on the individual data sheets. Where elastomer covered steel is shown, all welds should be ground to 13 mm minimum radius and should be prepared for elastomer covering with 5 mm nominal overall thickness plus an additional 5 mm build-up on turbine blade edges.

2.3 TANK-TYPE MIXERS

A. Tank type mixers shall have hoppers with the indicated capacities. Mixing shall be single or multiple shafts, as indicated.

B. The mixers shall be capable of batch operation with the material indicated.

PART 3 -- EXECUTION

3.1 INSTALLATION

A. Agitators and Mixers shall be installed in accordance with manufacturer's recommendations.

END OF SECTION

Equipment Specification Data Sheet 15132 -

Area/Location Stabilization F

Equipment No. **TP-06-MX-0602** **Holding Tank Mixer #1**
TP-06-MX-0605 **Holding Tank Mixer #2**

Process and Instrumentation Diagram **31001-P-018**

Process Media

Liquid	Liquid waste, dryer system condensate
Gasses	N/A
Vapors	N/A
Solids	N/A
Specific Gravity	1.0
Temperature	60-120°F
Pressure	NA

SCOPE

Mixer Type	Portable, top-entering, container mounted, direct drive electric mixer.
CAPACITY/THROUGHPUT	
Processing	Batch operation in 1,200 gallon tank
PERFORMANCE	
Nominal RPM	1750 (high shear and rapid mixing)
CONSTRUCTION	
Housing	Heavy duty aluminum casting.
	Drive Precision machined. Permanently lubricated sealed bearings.
	Shaft 316 SST, annealed and centerless ground. Large diameter for reduced vibration. Length < 48 inches (depending on mixer tank dimensions).
Impeller	304/316 SST. High efficiency axial flow design. Vibration free performance.
Mount	Flange mount, lubricated mechanical seals.
FINISHES AND PROTECTIVE COATINGS	
External Coating	Chemically resistant, low VOC catalyzed polyurethane primer and finish coat
ELECTRICAL DATA	
Motor horsepower	1.0
Enclosure	NEMA 7
Voltage/Phase/HZ	480/3/60
CONTROL DATA	
Control Panel	Local control panel for on/off operation

Preferred vendor, but not limited to:
Manufacturer Chemineer
Model No. 3JTD

Other Manufacturers
1. Cole Palmer
2. Neptune

1. Approved _____ Date _____ 4. Approved _____ Date
2. Approved _____ Date _____ 5. Approved _____ Date
3. Approved _____ Date _____ 6. Approved _____ Date

Equipment Specification Data Sheet 15132 -

Area/Location Stabilization F

Equipment No. **TP-04-MX-0402** **Liquid Treatment Tank Mixer #1**
TP-04-MX-0405 **Liquid Treatment Tank Mixer #2**

Process and Instrumentation Diagram **31001-P-016**

Process Media

Liquid	Liquid waste, dryer system condensate
Gasses	N/A
Vapors	N/A
Solids - Max	5%
Solids – Average	1%
Solids – Max Size	10 micron
Specific Gravity	1.0
Temperature	60-120°F
Pressure	NA

SCOPE

Mixer Type	Portable, top-entering, container mounted, direct drive electric mixer.

CAPACITY/THROUGHPUT

Processing	Batch operation in 1,200 gallon tank

PERFORMANCE

Nominal RPM	1750 (high shear and rapid mixing)

CONSTRUCTION

Housing	Heavy duty aluminum casting.
	Drive Precision machined. Permanently lubricated sealed bearings.
	Shaft 316 SST, annealed and centerless ground. Large diameter for reduced vibration. Length < 48 inches (depending on mixer tank dimensions).
Impeller	304/316 SST. High efficiency axial flow design. Vibration free performance.
Mount	Flange mount, lubricated mechanical seals.

FINISHES AND PROTECTIVE COATINGS

External Coating	Chemically resistant, low VOC catalyzed polyurethane primer and finish coat

ELECTRICAL DATA

Motor horsepower	1.0
Enclosure	NEMA 7
Voltage/Phase/HZ	480/3/60

CONTROL DATA

Control Panel	Local control panel for on/off operation

Preferred vendor, but not limited to:
Manufacturer Chemineer
Model No. 3JTD

Other Manufacturers
1. Cole Palmer
2. Neptune

1. Approved _____ Date _____ 4. Approved _____ Date
2. Approved _____ Date _____ 5. Approved _____ Date
3. Approved _____ Date _____ 6. Approved _____ Date

Equipment Specification Data Sheet 15132 -

Area/Location Stabilization F

Equipment No. **TT-03-MX-1301** **In-Container Mixer**

Process and Instrumentation Diagram **31001-P-024**

Process Media

Liquid	Liquid Waste, Reagents
Gasses	N/A
Vapors	N/A
Solids	~~N/A~~Solid and Sludge Debris Waste (<60 mm), Reagents
Specific Gravity	1.0
Temperature	60-120°F
Pressure	NA

SCOPE

Mixer Type	Portable, Fix-mounted top-entering, ~~container mounted,~~ direct drive ~~electric~~ hydraulic mixer.

CAPACITY/THROUGHPUT

Processing	Batch operation in 55 ~~and 85 gallon~~ drums

PERFORMANCE

Nominal RPM	~~1750 (high shear and rapid mixing)~~367 at 20 gpm hydraulic fluid flow. 27 hp continuous, 40 hp peak/intermittant

CONSTRUCTION

Housing	~~Heavy duty aluminum c~~Cast ~~ing~~iron.
Drive	Precision machined. Permanently lubricated sealed bearings.
Shaft	~~316 SST~~Carbon steel, ~~annealed and centerless ground. Large diameter for reduced vibration. Length <~~ 348 inches long ~~(depending on mixer tank dimensions)~~, 1.5 in diameter.
Impeller	~~304/316 SST~~Carbon steel. ~~High efficiency axial flow design. Vibration free performance.~~3-blade, 2-tier, 0.5" X 2" X 5"
Mount	~~C-Clamp mounted~~Bolted bearing mount ~~to hydraulic lift~~

FINISHES AND PROTECTIVE COATINGS

External Coating	~~Chemically resistant, low VOC catalyzed~~Clear rust inhibitor on motor exterior ~~polyurethane primer and finish coat~~

ELECTRICAL DATA

Motor horsepower	~~½~~20 HP motor for hydraulic pump
Enclosure	~~NEMA 7~~None
Voltage/Phase/HZ	23~~4~~80/~~3/~~460

CONTROL DATA

Control Panel	Local control panel for on/off operation

Preferred vendor, but not limited to:
Manufacturer Chemineerhar-Lynn
Model No. Series 2000~~1JTC~~

Other Manufacturers
1. Cole Palmer
2. Neptune

1. Approved _____ Date _____ 4. Approved _____ Date
2. Approved _____ Date _____ 5. Approved _____ Date
3. Approved _____ Date _____ 6. Approved _____ Date

Comment [LM3]: Need the max/min size of material see info for TT-04 above as an example – mixer below includes a bulk density criteria, also pressure for similiar kind of mixer.

Comment [BN4R3]: Done

Formatted: Indent: Left: 0", Hanging: 3.5"

Comment [LM5]: What does this mean? 367 what? 20 pgm fluid flow – is this an instrument readout?

Comment [BN6R5]: See left column, The 20 gpm is information from the mfg., No

Comment [LM7]: What is Ph do you mean HP? That unit is already implied with Motor HORSEPOWER

Comment [BN8R7]: done

Comment [LM9]: Does not make sense – use the same nomenclature as the above spec sheets uner electrical data, the left column states voltage/phase/frequency(Hz) so the right column should just list the values for each of these units for example a 480 volt, 3 phase, 60 hertz motor would be listed as 480/3/60 in the right hand column.

Comment [BN10R9]: done

Equipment Specification Data Sheet 15132 -

Area/Location Stabilization F

Equipment No. **TT-01-MX-0104** **High Capacity Solids Mixer**

Process and Instrumentation Diagram **31001-P-0022**

Process Media

Liquid	N/A
Gasses	N/A
Vapors	N/A
Solids	Soil, gravel, sand, and reagent mixture
Bulk Density	80 lb/ft^3 (waste) 70 lb/ft^3 (reagents)
Temperature	<100°F
Pressure	-5 inches WG

SCOPE

Unit Description	Electric driven batch mixer capable of mixing dense abrasive mixtures with low water content.

CAPACITY/THROUGHPUT

Processing	Batch operation
Capacity	4.5 yd^3

PERFORMANCE

Main shaft speed	19 RPM

CONSTRUCTION

Mixer	Gear drive twin shaft mixing mechanism with overlapping blades to quickly achieve a homogeneous mixture.
Housing	Totally enclosed heavy duty stainless steel trough.
Connections	Provide flanged inlet connections for the waste and reagent feeder discharge and the process vent.
Shaft	316 SST, annealed and centerless ground.

FINISHESAND PROTECTIVE COATINGS

Exterior	N/A
Interior	N/A

ELECTRICAL DATA

Motor quantity	2
Motor horsepower (each)	75 HP
Enclosure	NEMA 7
Voltage/Phase/HZ	480/3/60

CONTROL DATA

Control Panel	Local control panel for on/off operation
Weighing System	Not in mixer scope.

Preferred vendor, but not limited to:
Manufacturer Ross
Model No Twin Shaft Compulsory Mixer

Other Manufacturers
1. Approved Equal

1. Approved _____ Date _____ 4. Approved _____ Date
2. Approved _____ Date _____ 5. Approved _____ Date
3. Approved _____ Date _____ 6. Approved _____ Date

Equipment Specification Data Sheet 15132 -

Area/Location Stabilization F

Equipment No. **TT-02-MX-0204** **Low Capacity Solids Mixer**
TT-04-MX-0404 **Waste/Polymer Mixer**

Process and Instrumentation Diagram **31001-P-023, 31001-P-025**

Process Media

Liquid	N/A
Gasses	NA/
Vapors	NA/
Solids	Soil, gravel, sand; Soil, gravel, sand and polymer mixture
Bulk Density	80 lb/ft^3 (waste)
Temperature	<100°F
Pressure	-5 inches WG

SCOPE

Unit Description	Electric driven batch mixer capable of mixing dense abrasive mixtures with low water content.

CAPACITY/THROUGHPUT

Processing	Batch operation
Capacity	2.5 yd^3

PERFORMANCE

Main shaft speed	10 RPM

CONSTRUCTION

Mixer	Gear drive shaft mixing mechanism with full sweep blades to quickly achieve a homogeneous mixture.
Housing	Totally enclosed heavy duty stainless steel trough.
Connections	Provide flanged inlet connections for the waste and reagent feeder discharge and the process vent.
Shaft	316 SST, annealed and centerless ground

FINISHES AND PROTECTIVE COATINGS

Exterior	N/A
Interior	N/A

ELECTRICAL DATA

Motor horsepower	10 HP
Enclosure	NEMA 7
Voltage/Phase/HZ	480/3/60

CONTROL DATA

Control Panel	Local control panel for on/off operation
Weighing System	Not in scope

Preferred vendor, but not limited to:
Manufacture/Vendor Maxon
Model No Mini Maxcrete

Other Manufacturers
1. Approved Equal

1. Approved _____ Date _____ 4. Approved _____ Date
2. Approved _____ Date _____ 5. Approved _____ Date
3. Approved _____ Date _____ 6. Approved _____ Date

Area/Location Stabilization F

Equipment No. **TP-07-MX-0710 Grout Mixer**

Process Media

Liquid	Water
Gasses	N/A
Vapors	N/A
Solids	Cement
Bulk Density	70 lb/ft^3
Temperature	Ambient
Pressure	Atmospheric

SCOPE

Unit Description	Electric driven concrete drum mixer.

CAPACITY/THROUGHPUT

Processing	Batch operation with varying batch sizes
Capacity	3 ft^3

PERFORMANCE

CONSTRUCTION

Mixer	Gear drive shaft mixing mechanism with full sweep blades to quickly achieve a homogeneous mixture.
Housing	Welded Steel
Platform	Provide steel platform to raise mixer to a level at which the grout can be loaded into the 85 gallon overpack. Platform shall large enough to allow access to hand load cement bags into the mixer.
Cute	Provide chute to pour mortar mixture into overpack.

FINISHES AND PROTECTIVE COATINGS

Exterior coating	Manufacturer's standard
Interior coating	Manufacturer's standard

ELECTRICAL DATA

Motor Horsepower (each)	1/3 HP
Voltage/Phase/HZ	120/1/60

CONTROL DATA

Control Panel	Local control panel for on/off operation

Preferred vendor, but not limited to:
Manufacturer
Model No

Other Manufacturer
1. Approved Equal

1. Approved _____ Date _____ 4. Approved _____ Date
2. Approved _____ Date _____ 5. Approved _____ Date
3. Approved _____ Date _____ 6. Approved _____ Date

Technical Specification

Section 15140

Pumps

PART 1 – GENERAL

1.1 WORK INCLUDED

A. This Section includes the work necessary to furnish and install centrifugal, drum and progressing cavity pumps.

1.2 RELATED WORK

A. This Section shall be used in conjunction with the following other specifications and related Contract Documents to establish the total requirements for the referenced pumps.

1. Section 15000 – General Installation Requirements

2. Data Sheets at the end of this Section

CAUTION! Use of this Section without including all of the above listed items will result in omission of basic requirements.

B. In the Event of conflict regarding requirements for the referenced pumps between this Section and any other Section, the provisions of this Section shall govern.

1.3 SUBMITTALS

A. Provide the following:

1. Pump performance curves that include differential head, NPSHR, and brake horsepower.

PART 2 -- PRODUCTS

2.1 GENERAL

A. Provide pumps and motors of the type indicated on the equipment data sheets.

B. Material of construction shall be as indicated.

C. Performance: Pumps shall be suitable for the indicated operating conditions and fluids indicated.

2.2 PUMPS

A. Mounting: Where indicated, The pump and motor shall be mounted on a common, fabricated steel, fully enclosed base plate having a sufficient grout volume with adequately sized grout holes. The base shall be of the type that is fastened by bolts and shall have provision for adjustment and alignment of the pump and motor.

B. Gauge Openings: Provide tapped gauge openings at suction and discharge nozzles.

C. Motor

1. Electric: Electric motors shall have the characteristics listed and shall conform to Division 16. Enclosures shall be as indicated.

2. Pneumatic: Provide air-operated pump motors where required.

D. Seals

1. Mechanical Seals: Unless indicated otherwise, the pumps shall employ a mechanical seal, properly selected for the intended service.

2. Magnetic Drive: Where indicated, provide sealless magnetic drive pumps.

E. Bearings: The pump bearing frame assembly, as well as the motor, shall be furnished with bearings with readily accessible lubrication fittings and 200,000 hour design rating (minimum).

F. Tests: The pump shall be factory tested at the operating conditions, name-plated for quiet operation as a unit, thoroughly cleaned, and painted with one coat of machinery enamel prior to shipment. A set of installation instructions shall be included with the pump at the time of shipment. Manufacturer's agent shall field check pump for proper installation, alignment, lubrication, seals and other requirements and then start up and check for proper operation.

PART 3 -- EXCECUTION

3.1 Base: Pumps, base, motor and coupling shall be mounted on raised concrete pads. Although the pump and

motor have been aligned at the factory, they shall be realigned at least twice at the job. The concrete pump base shall be perfectly level. It shall be this Contractor's responsibility to assure that the base is finished level and that hold-down bolts are provided in their proper location.

3.2 Alignment: The pump shall be mounted on this level base and then aligned, using a dial indicator (regardless of whether the pump and motor have been factory aligned). Alignment must be made prior to installation of connecting piping.

3.3 Grouting and Final Alignment: After alignment, piping connections are to be made and the base thoroughly grouted. After all bolts are tightened, grout base with expanding type grout. The pump and motor are to be aligned again using a dial indicator. After a run-in period of one week, the alignment is to be checked and the pump and motor to be aligned again if required.

3.4 Piping: Arrange and support all piping so that absolutely no weight of the piping rests on the pump flanges. Alignment for final piping connection shall be such that slip fit is allowed. Should it be necessary to force the bolts, the piping shall be taken down and rearranged to allow the proper fit.

END OF SECTION

Equipment Specification Data Sheet 15140

Area/Location Stabilization F

Equipment No. **TP-04-PMP-0409** **Liquid Treatment Pump #1**
TP-04-PMP-0411 **Liquid Treatment Pump #2**

Process and Instrumentation Diagram: **31001-P-016**

Process Media

Liquid	Liquid Waste Feed (Slurries), Hydraulic Fluid (worst case)
Gasses	N/A
Vapors	N/A
Solids - Max	5%
Solids – Average	1%
Specific Gravity	0.9
Viscosity	2,000 SSU @ 68°F
Temperature	<100°F
Pressure	100 PSI

SCOPE

Pump Type Single stage progressive cavity with standard suction flange

CAPACITY/THROUGHPUT

Flow Rate	10 GPM

PERFORMANCE

Total Discharge Head (TDH)	40 PSI
Design Duty	Continuous
Efficiency @ Design Duty	70% minimum
Nominal RPM	300

CONSTRUCTION

Suction/Discharge Size	4-Inch/4-Inch
Connection Type	Flanged
Casing	316 Stainless Steel
Internals	316 Stainless Steel
Elastomers	Teflon
Bearings	Mechanical Seal

FINISHES AND PROTECTIVE COATINGS

Exterior Coating	N/A
Interior Coating	N/A

ELECTRICAL DATA

Motor horsepower	3.0 HP
Enclosure	NEMA 7
Voltage/Phase/HZ	480/3/60

CONTROL DATA

Control Panel	Local control panel for on/off control.

Preferred vendor, but not limited to:
Manufacturer Robbins-Meyers
Model Number: Monyo 2000 1E008

Other Vendors;
Other manufacturers: Flux, Vanton
1. Approved Equal

1. Approved _____ Date _____ 3. Approved _____ Date
2. Approved _____ Date _____ 4. Approved _____ Date

Equipment Specification Data Sheet 15140

Area/Location Stabilization F

Equipment No.		
	TP-04-PMP-0415	**Mixing Pump (Liquid Treatment)**
	TP-06-PMP-0601	**Container Pump (Liquid Holding)**
	TT-03-PMP-1308	**~~Container~~ Metering Pump (In-Container Mixing)**

Process and Instrumentation Drawing 31001-P-016; 31001-P-018; 31001-P-024; 31001-P-026

Process Media

Liquid	Liquid Waste Feed, Hydraulic Fluid (worst case), Reagents
Gasses	N/A
Vapors	N/A
Solids - Max	5% (Liquid Treatment Only)
Solids – Average	1% (Liquid Treatment Only)
Specific Gravity	0.9
Viscosity	2,000 SSU @ 68°F
Temperature	60-120°F
Pressure	As Indicated

SCOPE

Pump Type	Pump and mixer combination container pump with submerged tube-impeller shaft suitable for corrosive liquids. No. 30: 5 gpm self-priming peristaltic pump

CAPACITY/THROUGHPUT

Processing	Batch operation-with varying batch sizes, up to 55 gallon
Flow Rate	5 - 10 GPM

PERFORMANCE

Total Discharge Head (TDH)	25 Feet
Design Duty	Continuous
Efficiency @ Design Duty	70% minimum

CONSTRUCTION

Immersion Tubeset Dia	2-Inch
Immersion Depth	47-Inches
Connection Type	Threaded Hose
Casing	Polypropylene/polyethylene
BEARINGS	Mechanical seal
MOTOR	Electric
Type	Compressed Air
Pressure	85 psig
Air Consumption	17 scfm
Max Viscosity	1200 cP
Muffler Fitted	Yes
FUME SEAL	
Type	Fume Gland
Material	Polypropylene
Connection Type	Threaded

FINISHES AND PROTECTIVE COATINGS	N/A
ELECTRICAL DATA	Baldor Ind. Motor 115/230 Volt, 5/2.5 Amps, 1750 RPM
CONTROL DATA	M/N: Pump-N-Mixer W/ F416 Air Motor, CC-TE30B/H

Comment [LM11]: If this is a batch what is flowing?

Comment [BN12R11]: See process media section above.

Other Vendors;
Other manufacturers: Flux, Vanton
1. Approved Equal

1. Approved _____ Date _____ 3. Approved _____ Date
2. Approved _____ Date _____ 4. Approved _____ Date

Equipment Specification Data Sheet 15140

Area/Location Stabilization F

Equipment No. **TP-04-PMP-0411** **Chemical Feed Pump**

Process and Instrumentation Drawing **31001-P-016**

Process Media

Liquid	Hydrazine, Permanganates, H2SO4, NaOH
Gasses	N/A
Vapor	N/A
Solids	N/A
Specific Gravity	
Temperature	Ambient
Pressure	< 100 PSI

SCOPE

Pump Type Pump and Mixer
Combination with submerged tube-impeller shaft suitable for corrosive liquids.

CAPACITY/THROUGHPUT

Processing	Batch operation with varying batch sizes
Flow Rate	10 GPM

PERFORMANCE

Total Discharge Head (TDH)	25 Feet
Design Duty	Continuous
Efficiency @ Design Duty	70% minimum

CONSTRUCTION

Immersion Tubeset Dia	2-Inch
Immersion Depth	47-Inches
Connection Type	Threaded Hose
Casing	Polypropylene
BEARINGS MECHANICAL SEAL	
MOTOR	
Type	Compressed Air
Pressure	85 psig
Air Consumption	17 scfm
Max Viscosity	1200 cP
MUFFLER FITTED YES	
FUME SEAL	
Type	Fume Gland
Material	Polypropylene
Connection Type	Threaded

FINISHES AND PROTECTIVE COATINGS

Exterior coating	N/A
Interior coating	N/A

ELECTRICAL DATA

N/A

CONTROL DATA

N/A

Other Vendors;
Other manufacturers: Flux, Vanton
1. Approved Equal

1. Approved _____ Date _____ 3. Approved _____ Date
2. Approved _____ Date _____ 4. Approved _____ Date

Area/Location Stabilization F

Preferred vendor, but not limited to:
Manufacturer Flux

Model No. Pump-N-Mixer with F416 Air Motor

Other Vendors;
Other manufacturers: Flux, Vanton
1. Approved Equal

1. Approved _____ Date _____ 3. Approved _____ Date
2. Approved _____ Date _____ 4. Approved _____ Date

Equipment Specification Data Sheet 15140

Area/Location Stabilization F

Equipment No. **TP-04-PMP-0401** **Liquid Treatment Transfer Pump**

Process and Instrumentation Diagram: **31001-P-016**

Process Media

Liquid	Liquid Waste Feed (Slurries), Hydraulic Fluid (worst case)
Gasses	N/A
Vapors	N/A
Solids - Max	5%
Solids – Average	1%
Specific Gravity	0.9
Viscosity	2,000 SSU @ 68°F
Temperature	<100°F
Pressure	100 PSI

SCOPE

Pump Type Air operated double diaphragm
PVDF pump suitable for corrosive liquid applications.

CAPACITY/THROUGHPUT

Flow Rate	10 GPM

PERFORMANCE

Processing	Batch operation with a maxi batch size of 85 gallons
Total Discharge Pressure	50 PSI
Maximum solids diameter	1/8-inch
Air consumption	10 scfm

CONSTRUCTION

Suction/Discharge Size	1-Inch/1-Inch
Connection Type	Flanged
Material of construction	PVDF
Elastomers	Teflon
Mounting	Provide dip tube, foot valve and mounting assembly to mount pump on 55-gallon drum.

FINISHES AND PROTECTIVE COATINGS

N/A

ELECTRICAL DATA

N/A

CONTROL DATA

N/A

Preferred vendor, but not limited to:
Manufacturer ARO
Model Number: 6661B3-344-C

Other Vendors;
Other manufacturers: Flux, Vanton
1. Approved Equal

1. Approved _____ Date _____ 3. Approved _____ Date
2. Approved _____ Date _____ 4. Approved _____ Date

Equipment Specification Data Sheet 15140

Area/Location Stabilization F

Equipment No. **TP-06-PMP-0609** **Liquid Holding Pump #1**
TP-06-PMP-0611 **Liquid Holding Pump #2**

Process and Instrumentation Drawing **31001-P-018**

Process Media

Liquid	Liquid Waste, Condensate from Dryer System, Hydraulic Fluid (worst case)
Gasses	N/A
Vapors	N/A
Solids	N/A
Specific Gravity	0.9
Viscosity	2,000 SSU @ 68°F
Temperature	60-120°F
Pressure	As Indicated

SCOPE

Pump Type	Magnetic drive end suction centrifugal pump suitable for corrosive liquid applications.

CAPACITY/THROUGHPUT

Flow Rate	10 GPM

PERFORMANCE

Total Discharge Head (TDC)	55 ft
Design Duty	Continuous
Efficiency @ Design Duty	--
Nominal RPM	--

CONSTRUCTION

Suction/Discharge Size	1 1/2-Inch/1 1/4-Inch
Connection Type	Threaded
Casing	Polypropylene
Bearings	Magnetic Drive

FINISHES AND PROTECTIVE COATINGS

Exterior Coating	Manufacturers standard on non-plastic components
Interior Coating	N/A

ELECTRICAL DATA

Motor horsepower	1 HP
Voltage/Phase/Hz	480/3/60
Enclosure	NEMA 7

CONTROL DATA

Control	On/Off operation at local control panel

Preferred vendor, but not limited to:
Manufacturer Sethco
Model No. PM

Other Vendors;
Other manufacturers: Flux, Vanton
1. Approved Equal

1. Approved _____ Date _____ 3. Approved _____ Date
2. Approved _____ Date _____ 4. Approved _____ Date

Equipment Specification Data Sheet 15140

Area/Location Stabilization F

Equipment No. **TP-07-PMP-0715** **Sump Pump**

Process and Instrumentation Diagram

Process Media

Liquid	Liquid Waste
Gasses	N/A
Vapors	N/A
Solids	N/A
Specific Gravity	1.0
Temperature	Ambient
Pressure	Atmospheric

SCOPE

Pump Type	Polypropylene Submersible Pump

CAPACITY/THROUGHPUT

Flow Rate	20 GPM

PERFORMANCE

Total Discharge Head (TDC)	25 ft
Design Duty	Intermittent

CONSTRUCTION

Suction/Discharge Size	1 1/2 Inch
Connection Type	Threaded

FINISHES/PROTECTIVE COATINGS

N/A

ELECTRICAL DATA

Horsepower	1/4 HP
Voltage/Phase/Hz	115/1/60

CONTROL DATA

Operation	Automatic Float Switch

Preferred vendor, but not limited to:
Manufacture/Vendor: Ryan Herco

Other Vendors;
Other manufacturers: Flux, Vanton
1. Approved Equal

1. Approved _____ Date _____ 3. Approved _____ Date
2. Approved _____ Date _____ 4. Approved _____ Date

Technical Specification

Section 15176

Stainless Steel Tanks

1.0 SCOPE

This specification covers the requirements for shop fabricated stainless steel tanks to be built in accordance with the Tank Data Sheets.

2.0 GENERAL

2.1 Fabricator shall be fully responsible for the design, fabrication, inspection, and testing of the tanks per this specification and the Tank Data Sheets.

2.2 All engineering, design, fabrication and testing shall conform to the latest edition of the following codes, standards, specifications and other requirements which are part of this specification and in effect at the time of tender.

2.2.1 U.S. Department of Labor, Occupational Safety and Health Administration (OSHA).

2.2.2 Uniform Building Code (UBC).

2.2.3 ASME B&PV Code, Section VIII - Unfired Pressure Vessels

2.2.4 SSPC - Steel Structures Painting Council.

2.3 In addition to the tanks as shown on the Tank Data Sheets, the fabricator shall furnish and be responsible for the following additional items:

2.3.1 Tank nameplate (Mat'l - S.S.).

2.3.2 Tank exterior surface preparation and painting (Carbon Steel).

2.3.3 A complete set of gaskets for each tank.

2.3.4 Adequate clearances for all appurtenances and internals and for the total structural adequacy of the completed tank.

2.4 In the event of conflict between the body of this specification, data sheets, referenced codes, standards and specifications, the most stringent shall apply. If fabricator cannot readily determine the most stringent, he shall immediately contact purchaser for written resolution.

3.0 DESIGN

3.1 Compliance with Codes and Standards

3.1.1 The shop fabricated tanks shall be designed, fabricated, inspected, and tested in accordance with the requirements of ASME Section VIII. The tanks do not required Code stamping.

3.1.2 The fabricator may submit at his own discretion any alternate design but shall so indicate in his quotation and define the alternate.

3.2 External Load

3.2.1 Seismic calculations shall be based on the Uniform Building Code requirements.

3.2.2 Tanks shall be designed for seismic and/or wind loadings as specified on individual tank data sheets.

3.3 Shell and Head Design

3.4.1 Formed heads shall be of one piece construction with 100%/6% Flanged and Dished geometry. They shall be ordered with the same diameter as the shell for butt weld fit-up. Backing strips shall not be used.

3.4.2 Shells shall be prepared for double butt-welded construction having full penetration and complete fusion. Backing strips shall not be used.

3.4.3 All attachments to shells or heads shall be seal welded all around and contain the necessary weep holes.

3.5 When corrosion allowance is specified on data sheets, this allowance shall be added to all exposed liquid and vapor surfaces including nozzles, unless noted otherwise.

3.6 Connections and Opening

3.6.1 Nozzles shall be fit flush with the inside of the tank and full penetration welded from both sides. Reinforcement pads, if required, shall be added to the outside of the tank and be made from the same material as the shell.

3.6.2 Nozzle projections shall be 6" unless noted otherwise on Tank Data Sheets.

3.6.3 Manways shall be purchased as a subassembly from a manufacturer who can provide a partial data report. The manway shall be of the same material as the shell and meet the design conditions stated on the data sheet. The manway shall be purchased from Tiona-Betts or approved equal.

3.7 Fabricator shall submit all calculations and shop drawings related to design and fabrication of tanks to purchaser for approval. Calculations shall be checked prior to submittal.

4.0 MATERIALS

4.1 The tank materials shall meet the requirements of ASME B&PV Code, Section VIII.

4.2 All plates shall be furnished to a nominal thickness basis, expressed in inches.

4.3 Material for shell attachments and reinforcing pads shall be the same as the material of the shell.

4.4 Structural steel for tanks shall be in carbon steel, sandblasted and painted. Paint color will noted on approval drawings.

4.5 Flanges for stainless steel tanks may be carbon steel backing flanges with lap joint nozzles or stainless steel raised face slip on of the same material as the shell. Slip-0n nozzles shall be attached with bolt holes straddling tank center lines.

4.6 Nozzles for stainless steel tanks shall be of the same material grade as the shell.

4.7 Bolts and nuts shall conform to ASME SA-307, Grade B, or better.

4.8 All materials shall conform to that specified on purchaser's Tank Data Sheet and shall take precedence over any materials outlined in the preceding paragraphs.

4.9 Mill test reports are required on all plates, structural shapes, nozzles and flanges and are to kept on file according to ASME Section VIII and the fabricators QA manual.

5.0 FABRICATION

5.1 All welding shall be in accordance with Section IX of the ASME Boiler and Pressure Vessel Code.

5.2 Weld undercuts and excessive weld metal buildup at fillet welds shall be repaired.

5.3 Welder qualifications, weld procedures and the Fabricator's QA Manual shall be made available to the purchaser upon request and are subject to review.

5.4 Fabrication aids such as clips and brackets shall be properly removed without damage to base metal.

5.6 Prior to testing and final inspection, welded joints shall be free of slag, dirt, oil, paint and all other foreign matter.

6.0 INSPECTION, TESTING AND REPAIRS

6.1 The purchaser's inspector shall be given access to the fabricators shop for the purpose of inspecting the tanks for Code and Purchase requirements. The Purchaser shall be notified 3 full days prior to hydrotesting the tanks so that the inspector may schedule an inspection. Inspection by purchaser, or waiver of inspection, shall not relieve fabricator of responsibility for full compliance with this entire specification.

6.2 Tanks shell shall be hydrostatically tested with water which has been brought to pressure for a period of at least 4 hours. Service gaskets shall not be used for hydrotest.

6.3 Specific inspection and acceptance requirements per this specification and the fabricator and/or purchaser's inspector are supplemental to, and do not delete any of the requirements of the applicable codes and specifications.

7.0 SURFACE PREPARATION - EXTERIOR

7.1 Exterior surface preparation and/or shop painting, if required, shall be as specified on individual tank data sheets.

8.0 SURFACE PREPARATION - INTERIOR

8.1 All interior welds shall be continuous and ground smooth to match the surface finish of the ajoining plates with no evidence of surface porosity, holes, high spots, pockets or weld undercuts.

8.2 Fillet welds shall blend into the adjacent surfaces without any sharp angles.

8.3 Surfaces shall be free of weld spatter or other foreign material.

8.4 All nozzles shall be ground flush and smooth with the inside of the tank.

8.5 The interior surfaces of the vessels shall be solvent cleaned to remove all deposits of dirt, grease, oil or other foreign materials.

9.0 DRAWINGS

9.1 Fabricator shall provide purchaser with shop drawings which show all details of fabrication and appurtenances. Purchaser's approval or comments on shop drawings assumes no responsibility by purchaser for the accuracy of detail dimensions and the consequent fit of parts and materials. Fabricator shall provide purchaser with final shop drawings that reflect acceptance or resolution of all purchaser's comments on preliminary drawings and shall be certified by fabricator's engineer.

9.2 Fabricator's shop drawings shall be issued at the earliest possible date and before construction to facilitate related design activity. Shop drawings shall show, in addition the customary notes, the following data:

9.2.1 Empty weight and weight of tank full of water.

9.2.2 Location of nameplate and data to be stamped thereon.

9.2.3 Material specifications.

9.2.4 Testing procedures.

9.2.5 Weld procedures.

9.2.6 Corrosion allowance, if indicated on tank data sheet.

9.2.7 Location of all welded seams and details and sizes of all welds.

9.2.8 Tank design data.

9.2.9 Necessary structural details and dimensions and lifting requirements.

9.2.10 Surface preparation and any painting.

9.2.11 Number of tanks required.

10.0 SHIPPING

10.1 Nozzles without blind flanges shall be protected with plywood covers fastened with at least two bolts. Threaded connections shall be protected.

10.2 All openings, except open tops, shall be closed to prevent entrance of foreign materials.

10.3 Fabricator is responsible for loading and anchoring vessels to prevent shipping damage. Open top or thin wall tanks shall be braced as required to prevent damage during handling, shipping and unloading.

10.4 All items shall be tagged for exact correspondence with the shipping list.

11.0 PROPOSALS

11.1 Proposals shall state either full compliance with the inquiry specifications or shall list exceptions taken. Any proposed deviation or exception shall be clearly defined, with justification.

11.2 With the proposal, fabricator shall furnish sufficient information for the purchaser to evaluate whether the bidder has complied to the specification and Tank Data Sheets, including material thicknesses that would be used and procurement, drawing and fabrication schedules.

11.3 Proposal shall state materials to be used for all wetted parts.

11.4 Alternate in materials or design may be submitted provided all exceptions to this specification are referenced by paragraph number.

11.5 Proposal shall state surface preparation and any painting required.

11.6 Proposal shall include a price schedule for the complete installation of additional nozzles of each size and for each manway complete with gasket, cover and bolting as specified on purchaser's Tank Data Sheet in addition to any subassemblies such as ladders, platforms and other external attachments indicated as being provided by fabricator.

END OF SECTION

NOZZLE SCHEDULE

SERVICE	MARK	QTY	SIZE	RATING	TYPE	MATERIAL	THICK
MANWAY COVER	A	1	18"	150#		SA240 TP316L	*
INLET	B	1	2"	150#	LJ	SA240 TP316L/SA182	*
OUTLET	C	1	2"	150#	LJ	SA240 TP316L/SA182	*
VENT	D	1	2"	150#	LJ	SA240 TP316L/SA182	*
DRAIN/BOTTOM	E	1	2"	150#	LJ	SA240 TP316L/SA182	*
LEVEL	F	1	4"	300#	SPW	SA182 316L	*
AGITATOR	G	1	4"	150#		SA240 TP316L/SA182	*

DESIGN DATA

EQUIPMENT NUMBER	TP-84-TK-8483
	TP-84-TK-8484
	TP-85-TK-8483
	TP-85-TK-8484
OPERATING PRESSURE	ATMOSPHERIC
OPERATING TEMPERATURE MAX/MIN F	110/40
LIQUID SPECIFIC GRAVITY	1.0
HAZARDOUS LEVEL	NO
DESIGN PRESSURE: PSIG	.5# STATIC
DESIGN TEMPERATURE F	150
TANK NOMINAL CAPACITY GAL	1200
ROOF LOADING PSF	N/A
HYDROTEST PSIG: PSIG	PER CODE
CORROSION ALLOWANCE SHELL/HEADS	1/16" / 1/16"
JOINT EFFICIENCY SHELL/HEADS	*
DESIGN CODE ASME SECTION VIII	STAMP: NO
RADIOGRAPHY *	STRESS RELIEF: N/A
TYPE SUPPORTS:	4 LEGS
INSULATION:	NONE
HEATING:	NONE
SANDBLAST (CS) SSPC	PAINT: (CS) SSPC
MANWAY TYPE	*
PLATFORM CLIPS: NONE	LADDER CLIPS: NONE
PIPE SUPPORTS	NONE
WIND LOAD: HAZARDS	SEISMIC ZONE: UBC-ZONE 2
SAFETY AREAS *	WALK DESIGN PT. *

MATERIALS

ITEM	THICKNESS	MAT. CLASS	MATERIAL
SHELL	3/16" MIN.	SA240 316L	316LSS
TOP HEAD	3/16" MIN.	SA240 316L	316LSS
CONE	3/16" MIN.	SA240 316L	316LSS
NOZZLE NECK	.344 .49 MIN.	SA312-TP316L	316LSS
FLANGES	150#	SA105	CS
COUPLINGS	3000#	SA182-F316L	316LSS
MANHOLE	*	SA240-316L	316LSS
SUPPORTS	*	SA-36	CARBON STEEL
ROD TANS	*	SB-397	CARBON STEEL
GASKETS	1/8"		TEFLON

* BY TANK MANUFACTURER

NOTES:

1. NOZZLES AND SUPPORTS NOT DRAWN IN TRUE ORIENTATION FOR CLARITY.
2. CROSS BRACE LEGS AS NECESSARY TO MEET SEISMIC DESIGN.
3. PROVIDE BASE PLATES ON THE LEGS REQUIRED TO PREVENT OVERTURNING AT SEISMIC FORCE. PROVIDE ANCHOR BOLT SIZE AND LOCATION FOR EACH BASE PLATE.

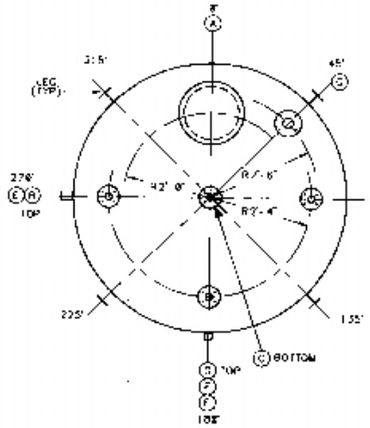

ORIENTATION

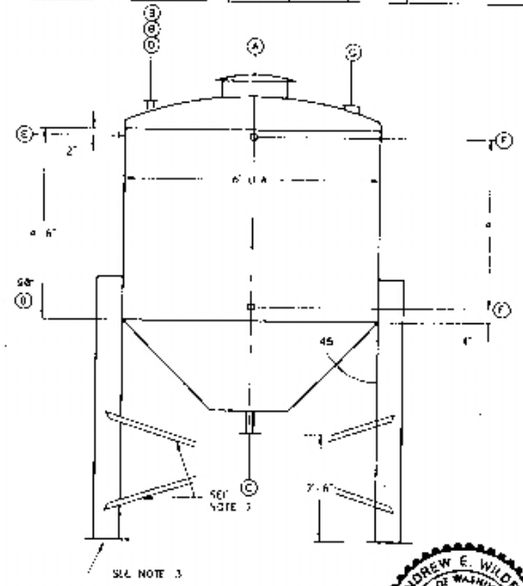

ELEVATION
(SEE NOTE 1)

ANDREW E. WILDER
STATE OF WASHINGTON
30362
REGISTERED
PROFESSIONAL ENGINEER

EXPIRES: JULY 01, 1996

EDWARD CONSULTING ENGINEERS, INC

ATG inc
47375 FREMONT BOULEVARD
FREMONT, CA 94538

MIXED WASTE FACILITY-
STABILIZATION BLDG

LIQUIDS TREATMENT &
HOLDING TANKS
TANK DATA SHEET

15176D

Technical Specification

Section 15181

Piping & HVAC Duct Instalation

PART 1 – GENERAL

1.1 WORK INCLUDED
A. This section specifies the requirements necessary for materials, fabrication and installation of piping and HVAC duct insulation

1.2 RELATED WORK
A. This section shall be used in conjunction with the following other specifications and related Contract Documents to establish the total requirements for the insulation systems
1. Section 15060 - Pipe and Pipe Fittings-General
2. Section 15841 - Sheet Metal Ductwork (Low Pressure)
3. Section 15842 - Sheet Metal Ductwork (High Pressure)

1.3 QUALITY ASSURANCE:

A. Approved Glass Fiber Pipe Covering Manufacturers:

1. Owens-Corning
2. Certain-Teed
3. Knauf
4. Manville

B. Approved Glass Fiber Blanket Manufactures:

1. Owens-Corning
2. Certain-Teed
3. Knauf
4. Manville

C. Approved Fire Retardant Adhesive Manufacturers:

1. Benjamin Foster
2. 3M
3. Insul-Coustic
4. Manville

D. Approved Lagging Adhesive Manufacturers:

1. Benjamin Foster
2. Borden
3. Insul-Coustic
4. Manville

E. Approved Foamed Plastic Equipment Covering:

1. Armstrong
2. Owens-Corning

PART 2 -- PRODUCTS

2.1 Piping Insulation:

A. Glass Fiber: Minimum density of glass fiber pipe insulation shall be 3.5 pounds per cubic foot.

B. Jackets: Glass fiber pipe insulation shall have an "All-Purpose" jacket. Insulation shall have composite (insulation, jacket or facing, and adhesive used to adhere the facing or jacket to the insulation fire and smoke hazard ratings not to exceed a flame spread of 25 or smoke development of 50. Accessories, such as adhesives, mastic, cements and tapes shall have the some component ratings as listed above. Any treatment of jackets or facings to impart flame and smoke safety shall be permanent. The use of water soluble treatments is prohibited. Vapor barrier covering shall be continuous over insulated fittings.

2.2 Duct Insulation:

A. Glass Fiber Duct Wrap: Glass fiber blanket, two (2) inches thick with minimum 0.6 pound density.

B. Jacket: Foil-Skrim-Kraft (FSK) jacket with vapor barrier complying with NFPA 90A requirements.

C. Glass Fiber Duct Wall Insulation: Semi-rigid board with FSK face, 3 pound density.

PART 3 – EXECUTION

3.1 General: Apply all insulation in accordance with the manufacturer's recommendations and the Standard of Insulation Application and in a neat and workmanlike manner. All tests shall be completed and systems approved before insulation is applied to piping and equipment.

3.2 Piping Insulation:

A. Domestic Hot Water Piping: Insulate with glass fiber pipe covering. Insulation to be 1 inch thick for 1 inch and smaller pipe and 1-1/2 inch for 1-1/4 inch and larger. Insulate hot water return piping same as hot water piping.

B. Domestic Cold Water Piping: If called for on drawings, insulate with glass fiber pipe covering. Insulation thickness to be 1/2 inch.

C. Heating Water Piping: Insulate with glass fiber pipe covering; thickness as follows:

1.	1/2 inch and 3/4 inch pipe:	1 inch thick
2.	1 inch to 1-12 inch pipe:	1-1/2 inch thick
3.	2 inch to 3 inch pipe:	2 inch thick
4.	4 inch and larger pipe:	2-1/2 inch thick

D. Chilled Water Piping and Glycol Piping: Insulate with 1 inch thick glass fiber pipe covering. Fittings on chilled water piping to have double vapor barrier seal, Zeston or approved equal. The first vapor barrier applied prior to finished mudding and the second applied with the finish coat.

E. Pipe Support Application: Insulation shields shall be installed at pipe supports as follows:

1. On heating water piping apply a three inch wide vapor barrier tape or band over the butt joints at the insulation and shield.

2. On cold water and chilled water piping, apply a coat of vapor barrier lap cement, Benjamin Foster's #60-26 or approved equal, on all butt joints and seal the joints with three inch wide vapor barrier tape or band.

3. Shields shall be installed with the sheet metal overlap on top of the insulation vapor barrier. Insulation contractor shall tape over all sheet metal overlaps.

F. Pipe Fittings: All fittings, including valve bodies, bonnets, unions, flanges and expansion joints, shall be insulated and finished in accordance with the insulation manufacturer's recommendations. Do not insulate flex connections. Use Zeston or approved equal vapor barrier jackets on all fittings.

3.3 Ductwork:

A. Exposed Ductwork: All supply and outside ducts and plenums located in mechanical rooms and all exposed supply ducts to be internally lined (see Duct Lining Specifications in Section concerning Sheet Metal). Exposed high velocity ducts to be lined using double wall construction as specified in the Specifications.

B. Concealed Supply Ducts: Insulate concealed supply ducts with glass fiber blanket with "FSK" (Foil-Skrim-Kraft) jacket, except double wall ductwork shall have an insulating liner as specified in Section 15840, Sheet Metal. Fittings to

have wire and duct adhesive as required. On all rectangular or square ducts over 24 inches wide, Gramweld or equal welding pins shall be used on the bottom to prevent sagging. Maximum spacing 18 inches on center in both directions. Insulation material shall be applied with butt joints and all seams shall be sealed with vapor seal mastic or taped with 2 inch wide vaporproof pressure sensitive tape. All penetrations shall be sealed with vapor barrier adhesive. It shall be the Contractor's option to insulate the exterior of flat duct with semi-rigid board, insulation thickness to equal depth of external reinforcement members, vapor barrier seal at all butt joints as previously described. All material must comply with NFPA 90A requirements.

C. Outside air Ducts and Plenums: Outside air ducts and plenums shall be internally lined with acoustical duct lining.

D. Exhaust Air Ducts and Plenums: Outside air ducts and plenums shall be internally lined with acoustical duct lining.

E. Internally Lined Ducts: Where ducts are internally lined, it is not necessary to provide exterior insulation. Care shall be taken to lap the ends of the exterior insulation a minimum of 6 inches past the interior insulation unless otherwise shown. The vapor barrier jacket, when provided, shall have the ends sealed to the duct with vapor barrier mastic. Line ducts and plenums not otherwise specified to be lined as indicated on Drawings.

3.4 Expansion Joints: Insulate expansion joints on heating and chilled water lines to match thickness of adjacent piping. Buildup piping insulation adjacent to the expansion joints sufficiently to allow external clearance within the insulation for the diameter of the expansion joint. Fasten one end of the expansion joint insulation securely and provide aluminum or sheet metal on the buildup insulation at the other end to permit movement of the insulation without damage. Insulation over the expansion joints shall be finished as for adjacent piping with fireproof covering.

END OF SECTION

Technical Specification

Section 15663

Liquid Filtration Equipment

Area/Location Stabilization F

Equipment No. **TP-04-FLT-0404** **Liquid Bag Filter #1**
TP-04-FLT-0414 **Liquid Bag Filter #2**
TP-04-FLT-0410 **Liquid Bag Filter #3**

Process and Instrumentation Diagram 31001-P-016

Process Media

Liquid	Liquid Waste Feed (Slurries), Hydraulic Fluid (worst case)
Gasses	N/A
Vapors	N/A
Solids - Max	5%
Solids – Average	1%
Specific Gravity	0.9
Viscosity	2,000 SSU @ 68°F
Temperature	100°F
Pressure	100 PSI

SCOPE

Filter Type: Liquid bag filter with hermetically sealed basket to prevent liquid bypass. Filter housing shall be of the top inlet, bottom discharge orientation. Filters shall be easily removable using "bag in/bag out" procedures. Filter housing shall be properly selected based on anticipated solids loading, expected flow rate, and minimized filter changes.

CAPACITY/THROUGHPUT

Processing	Batch operation with varying batch sizes
Flow Rate	10 GPM

PERFORMANCE

Max Pressure Drop (Clean)	<1 PSI
Max Pressure Drop (Dirty)	15 PSI
Flow	Top inlet, bottom discharge, downflow orientation.

CONSTRUCTION

HOUSING:

Inlet/Outlet Size	2-inch/2-inch
Connection Type	Flanged
Housing	316 stainless steel housing
Pressure Rating	150 PSI
Code Compliance	Stamped to meet ASME Code Section VIII, Division 1
Gasket	Single teflon encapsulated gasket

FILTER MEDIA

Type High efficiency bag filter with built-in handles
Material Polypropylene
Bag Surface Area 4.4 sq. ft.
Basket316 Stainless Steel perforated basket
Micron Rating
Liquid Bag Filter #1 100 micron
Liquid Bag Filter #2 10 micron
Liquid Bag Filter #3 1 micron
Extra Filters Provide one extra filter for each of the following micron ratings: 5, 50, 200.

FINISHES AND PROTECTIVE COATINGS

Not Required

ELECTRICAL DATA

N/A

CONTROLS

Other Manufacturers
1. Approved Equal

1. Approved _____ Date _____ 4. Approved _____ Date
2. Approved _____ Date _____ 5. Approved _____ Date
3. Approved _____ Date _____ 6. Approved _____ Date

Area/Location Stabilization F

N/A

Preferred vendor, but not limited to:
Manufacturer: Filter Specialists Inc. (FSI)
Model Number: FSPN85-2-316-150-2”FLG

Other Manufacturers
1. Approved Equal

1. Approved _____ Date _____ 4. Approved _____ Date
2. Approved _____ Date _____ 5. Approved _____ Date
3. Approved _____ Date _____ 6. Approved _____ Date

Equipment Specification Data Sheet 15663 - Liquid Filtration I

Area/Location Stabilization F

Equipment No. **TP-06-FLT-0612** **Carbon Filter Bank**

Process and Instrumentation Diagram **31001-P-018**

Process Media

Liquid	Condensate from Dryer System, Liquid Waste, Hydraulic Fluid (worst case)
Gasses	N/A
Vapors	N/A
Solids	N/A
Specific Gravity	0.9
Viscosity	2,000 SSU @ 68°F
Temperature	100°F
Pressure	100 PSI

SCOPE

Filter Type	Duplex activated carbon filter suitable for organic reduction, skid mounted, pre-wired and pre-plumbed with inlet and outlet isolation valves.

CAPACITY/THROUGHPUT

Flow Rate	10 GPM
Processing	Batch operation with varying batch sizes

PERFORMANCE

Pressure Drop	5 PSID

CONSTRUCTION

HOUSING

Inlet/Outlet Size	1-inch/1-inch
Pressure Rating	100 psi
Housing	Carbon Steel
Code Compliance	Stamped to meet ASME Code Section VIII, Division 1
Options	Top access, elbowed outlet, inlet pressure gauge.

FILTER MEDIA

Type	Activated carbon suitable for organics reduction
Quantity	5.0 ft^3

FINISHES AND PROTECTIVE COATINGS

Interior and exterior:	Lined and finished with epoxy coating for corrosion resistance

ELECTRICAL

Enclosure	NEMA 7
Volts/Phase/HZ	120/1/60

CONTROLS

Operation	Skid mounted control panel for control of automatic backwash by either time or differential pressure. Unit shall automatically redirect flow through second filter during backwashing

Preferred vendor, but not limited to:
Manufacturer: US Filter GPZLS
Model Number: GPZLS

Other Manufacturers
1. Approved Equal

1. Approved _____ Date _____ 4. Approved _____ Date
2. Approved _____ Date _____ 5. Approved _____ Date
3. Approved _____ Date _____ 6. Approved _____ Date

Area/Location Stabilization F

Equipment No. **TP-06-FLT-0613** **Ion Exchange Filter Bank**
Process and Instrumentation Diagram **31001-P-018**

Process Media

Liquid	Condensate from Dryer System, Liquid Waste, Hydraulic Fluid (worst case)
Gasses	N/A
Vapors	N/A
Solids	N/A
Specific Gravity	0.9
Viscosity	2,000 SSU @ 68°F
Temperature	100°F
Pressure	100 psi

SCOPE

Filter Type	Two bed deionizer capable of treating the indicated waste stream and suitable for in-place regeneration. Unit shall be skid mounted, pre-wired and pre-plumbed with inlet and outlet isolation valves.

CAPACITY/THROUGHPUT

Flow Rate	10 GPM
Processing	Batch operation with varying batch sizes

PERFORMANCE

FEEDWATER GUIDELINES

Total Dissolved Solids	<=350 ppm
Alkalinity	>=30%
Chlorides	<=30%
Sodium	<=30%
Silica	<=10%
Color (APHA Units)	<=5
Turbidity, NTU	<=6
Free Chlorine	<=0.2 ppm
Fe, Mn	<=0.3 ppm
Organics, PPM Oxygen Consumed	<=1

CONSTRUCTION

HOUSING

Inlet/Outlet Size	3/4-inch/3/4-inch
Connection Type	Threaded
Pressure Rating	100 psi
Housing	Carbon Steel
Code Compliance	Stamped to meet ASME Code Section VIII, Division 1
Options	Inlet and outlet pressure gauges.
Piping	Pre-plumbed with inlet and outlet true-union isolation valves. Process piping shall be Sch 80 PVC and regeneration piping shall be Sch 80 CPVC .

RESIN

Description	Resins shall be selected according to the indicated flow stream characteristics.
Cation Type, Quantity	Na+; 5.0 ft^3
Anion Type, Quantity	Cl-; 5.0 ft^3

FINISHES AND PROTECTIVE COATINGS

Exterior	Epoxy coating
Interior	PVC lined

ELECTRICAL

Other Manufacturers
1. Approved Equal

1. Approved _____ Date _____ 4. Approved _____ Date
2. Approved _____ Date _____ 5. Approved _____ Date
3. Approved _____ Date _____ 6. Approved _____ Date

Area/Location Stabilization F

Enclosure	NEMA 7
Volts/Phase/HZ	120/1/60
CONTROLS	
Operation	Skid mounted programmable logic controller/control panel for control of automatic regeneration

Preferred vendor, but not limited to:
Manufacturer: US Filter

Model No. ASB 2-Bed Deionizer

Other Manufacturers
1. Approved Equal

1. Approved _____ Date _____ 4. Approved _____ Date
2. Approved _____ Date _____ 5. Approved _____ Date
3. Approved _____ Date _____ 6. Approved _____ Date

Equipment Specification Data Sheet 15663 - Liquid Filtration I

Area/Location Stabilization F

Equipment No. **TP-06-Z-0610** **UV Oxidizer**

Process and Instrumentation Diagram **31001-P-018**

Process Media

Liquid	Condensate from Dryer System, Liquid Waste, Hydraulic Fluid (worst case)
Gasses	N/A
Vapors	N/A
Solids	N/A
Specific Gravity	0.9
Viscosity	2,000 SSU @ 68 °F
Temperature	300°F
Pressure	100 PSI

SCOPE

Type	Ultraviolet oxidation system capable of destruction of small amounts of organic material (hydrocarbons, alcohol, ketones, volatile organic compounds, aromatics.)

CAPACITY/THROUGHPUT

Flow Rate	10 GPM

PERFORMANCE

Pressure Drop	2 PSID
Quantity of UV Lamps	4

CONSTRUCTION

Inlet/Outlet Size	3-inch/3-inch
Connection Type	Flanged
Housing	Carbon steel
Wetted Parts	316 stainless steel
Pressure Rating	150 psi
Code Compliance	ASME Code Section VIII, Division 1

FINISHES AND PROTECTIVE COATINGS

Interior	Not required
Exterior	Epoxy coated

ELECTRICAL

Enclosure	NEMA 7
Volts/Phase/HZ	120/1/60

CONTROLS

Control Cabinet	PLC controller capable of varying UV dose rates, screen displays and alarms

Preferred vendor, but not limited to:
Manufacturer: Aquionics
Model No. Photon UV System

Other Manufacturers
1. Approved Equal

1. Approved _____ Date _____ 4. Approved _____ Date
2. Approved _____ Date _____ 5. Approved _____ Date
3. Approved _____ Date _____ 6. Approved _____ Date

Technical Specification

Section 15801

Building Air Handling Units

PART 1 GENERAL

WORK INCLUDED

This Section specifies the requirements for materials and installation of packaged air handling units

RELATED WORK

This Section shall be used in conjunction with the following other Specifications and related Contract Documents to establish the total requirements for the referenced air handling unit systems.

Section 15000 – General Installation Requirements

The individual Equipment Data Sheets at the end of this section

CAUTION! Use of this section without including all of the above listed items will result in omission of basic requirements.

In the event of conflict regarding air handling unit requirements between this Section and any other section, the provisions of this Section shall govern.

REFERENCES

Section Requirements for references and standards.

ABMA STD 9 - Load Ratings and Fatigue Life for Ball Bearings.

ABMA STD 11 - Load Ratings and Fatigue Life for Roller Bearings.

AMCA 99 - Standards Handbook.

AMCA 210 - Laboratory Methods of Testing Fans for Rating.

AMCA 300 - Reverberant Room Method for Sound Testing of Fans.

AMCA 301 - Methods for Calculating Fan Sound Ratings from Laboratory Test Data.

AMCA 500 - Test Methods for Louvers, Dampers and Shutters.

ARI 410 - Standard for Forced-Circulation Air-Cooling and Air-Heating Coils.

ARI 430 - Standard for Central-Station Air-Handling Units.

ARI Guideline D - Application and Installation of Central Station Air-Handling Units.

NEMA MG1 - Motors and Generators.

NFPA 70 - National Electrical Code.

SMACNA - HVAC Duct Construction Standards - Metal and Flexible.

UL 900 - Standard for Air Filter Units.

UL - Fire Resistance Directory.

QUALITY ASSURANCE

Manufacturer Qualifications: Company specializing in manufacturing the Products specified in this section with minimum three years experience.

PART 2 PRODUCTS

MANUFACTURERS

Pace

Engineered Air

York

GENERAL DESCRIPTION

A. Configuration: Fabricate with [fan] [fan and coil section] plus accessories, including:

Cooling coil section.

Pre-Heating coil.

Burner section

Filter section.

B. Fabrication: Conform to AMCA 99 and ARI 430.

2.3 CASING

A. Construction: Fabricate on channel base of welded steel. Assemble sections with gaskets and bolts.

1. Outside Casing:

a. Galvanized Steel: 0.0516 inch.

2. Inside Casing:

a. Galvanized Steel:, 0.0276 inch thick.

3. Floor Plate:

a. Galvanized Steel: 1.382 thick.

B. Insulation: Neoprene coated, glass fiber, applied to internal surfaces with adhesive [and weld pins] with exposed edges of insulation coated with adhesive.

1. Density: 1-1/2 inch thick, 1-1/2 lbs/cu ft

C. Finish: Baked enamel

D. Inspection Doors: 10 x 10 inch of galvanized steel for flush mounting, with gasket, latch, and handle assembly .

E. Walk-in Access Doors: 24 x 48 inch ([of galvanized steel insulated sandwich construction, for flush mounting, with hinges, gasket, latch, and handle assemblies

F. Lights: Provide in accessible sections suitable for damp locations with wire guards, factory wired to weatherproof switch mounted on casing exterior. In humidifier sections, provide lights suitable for wet locations.

G. Drain Pans: Construct from double thickness galvanized steel with insulation between layers with welded corners. Cross break and pitch to drain connection. Provide drain pans under cooling coil section.

H. Bottom Inlet Units: Provide steel or aluminum walking grate on structural supports.

I. Strength: Provide structure to brace casings for suction pressure of 2.5 inch wg with maximum deflection of 1 in 200.

J. Weatherproof Casing Finish: Seal fixed joints with flexible weather tight sealer. Seal removable joints with closed-cell foam gasket. Provide cap strips over roof flanges. Provide rain caps and gaskets on access doors.

K. Louvers: Stationary, of galvanized steel, 4 inch deep with plenum, 1/2 inch mesh, 0.04 inch galvanized wire bird screen in aluminum frame, and bearing AMCA Certified Ratings Seal in accordance with AMCA 500FANS

L. Type: Forward curved, or Backward inclined, type fan.

M. Performance Ratings: Conform to AMCA 210.

N. Sound Ratings: AMCA 301; tested to AMCA 300 .

O. Bearings: Self-aligning, grease lubricated, ball or roller bearings with lubrication fittings extended to exterior of casing with [plastic] [aluminum] [copper] tube and grease fitting rigidly attached to casing.

P. Mounting: Locate fan and motor internally on welded steel base coated with corrosion resistant paint. Factory mount motor on slide rails. Provide access to motor, drive, and bearings through removable casing panels or hinged access doors. Mount base on vibration isolators.

BEARINGS AND DRIVES

Bearings: Heavy duty pillow block type, self-aligning, grease-lubricated ball bearings, with ABMA 9 L-10 life at 50,000 hours.

Shafts: Solid, hot rolled steel, ground and polished, with key-way, and protectively coated with lubricating oil.

V-Belt Drive: Cast iron or steel sheaves, dynamically balanced, bored to fit shafts, and keyed. Variable and adjustable pitch sheaves for motors 15 hp and under selected so required rpm is obtained with sheaves set at mid-position; fixed sheave for 20 hp and over, matched belts, and drive rated as recommended by manufacturer or minimum 1.5 times nameplate rating of the motor.

Belt Guard: Fabricate to SMACNA Standard; 0.106 inch (2.6 mm) thick, 3/4 inch (20 mm) diamond mesh wire screen welded to steel angle frame or equivalent, prime coated. Secure to fan or fan supports without short circuiting vibration isolation, with provision for adjustment of belt tension, lubrication, and use of tachometer with guard in place.

COILS

Casing: Provide access to both sides of coils. Enclose coils with headers and return bends exposed outside casing. Slide coils into casing through removable end panel.

Drain Pans: 24 inch (600 mm) downstream of coil and down spouts for cooling coil banks more than one coil high.

Eliminators: Three break of galvanized steel, mounted over drain pan.

Air Coils: Certify capacities, pressure drops, and selection procedures in accordance with ARI 410.

Fabrication:

1. Tubes: 5/8 inch (16 mm) OD seamless copper expanded into fins, brazed joints.
2. Fins: Aluminum.
3. Casing: Die formed channel frame of galvanized steel.

Water Pre-Heating Coils:

Headers: Cast iron, seamless copper tube, or prime coated steel pipe with brazed joints.

Configuration: Drainable, with threaded plugs for drain and vent; serpentine type with return bends on smaller sizes and return headers on larger sizes.

Refrigerant Coils:

Headers: Seamless copper tubes with silver brazed joints.

Liquid Distributors: Brass or copper venturi distributor with seamless copper distributor tubes.

Configuration: Down feed with bottom suction.

BURNER

Provide natural gas direct fired burner section having the capacity indicated.

FILTERS

Filter Box: Section with filter guides, access doors from both sides, for side loading with gaskets and blank-off plates.

Filter Media: UL 900 listed, Class I or Class II.

Angle: 4 inches (100 mm) deep disposable panel filters.

Filter Gauges: [3-1/2 inch (90 mm) diameter diaphragm actuated dial in metal case,] [2 inch (50 mm) diameter diaphragm actuated dial in metal case,] [One piece molded plastic inclined manometer,] with static pressure tips.

PART 3 EXECUTION

INSTALLATION

Install in accordance with ARI 435.

Bolt sections together with gaskets.

Install flexible connections specified in Section 15910 between fan inlet and discharge ductwork. Ensure metal bands of connectors are parallel with minimum one inch (25 mm) flex between ductwork and fan while running.

Install assembled unit on vibration isolators. Install isolated fans with resilient mountings and flexible electrical leads. Install restraining snubbers as [indicated] [required]. Refer to Section 15245. Adjust snubbers to prevent tension in flexible connectors when fan is operating.

Provide [fixed] sheaves required for final air balance.

Make connections to coils with unions or flanges.

Hydronic Coils:

Hydronic Coils: Connect water supply to leaving air side of coil (counterflow arrangement).

Provide shut-off valve on supply line and lockshield balancing valve on return line.

Locate water supply at bottom of supply header and return water connection at top.

Provide float operated automatic air vents at high points complete with stop valve.

Ensure water coils are drainable and provide drain connection at low points.

Refrigerant Coils: Provide sight glass in liquid line within 12 inches (300 mm) of coil.

Insulate coil headers located outside air flow as specified for piping.

END OF SECTION

Area/Location Stabilization Building

Equipment No. **SB-02-AHU-0204** **Air Handler Unit #4**
SB-02-AHU-0205 **Air Handler Unit #5**

Process and Instrumentation Diagram **31001-P-029-01**

Process Media

Gasses	100% Outside Air
Vapors	Water
Temperature	Outdoor, ambient
Pressure	Ambient

SCOPE

Unit description	Split system engineered rooftop central air handling system for 100% outside air application

CAPACITY/THROUGHPUT

Flow rate	50,000 SCFM

PERFORMANCE

	FAN PERFORMANCE
Fan type	Plug Fan
Drive	Belt driven w/adjustable sheaves
Fan external static pressure	1.5” w.g.
	PRE-HEAT COIL PERFORMANCE
Coil type	Heat recovery water
Coil Capacity	1,200 MBH
Coil EAT (DB)	12°F
Coil LAT (DB)	32°F
	BURNER PERFORMANCE
Burner type	Direct fired natural gas burner
Capacity	1,600 MBH
EAT (DB)	32°F
LAT (DB)	60°F
	COOLING COIL PERFORMANCE
Coil type	DX, with matched condensing unit
Coil Capacity	84 Tons
Coil EAT (DB/WB)	93°F/64°F
Coil LAT (DB)	75°F/50% RH

FILTER Performance

Primary filter efficiency	30%

CONSTRUCTION

Unit casing	Galvanized steel double wall construction
Insulation	2-inch thick

1. Approved _____ Date _____
2. Approved _____ Date _____
3. Approved _____ Date _____
4. Approved _____ Date
5. Approved _____ Date
6. Approved _____ Date

Area/Location Stabilization Building

FINISHES/PROTECTIVE COATINGS

Exterior Coaating	Epoxy primer, poly-urethane finish capable of passing ASTM B117 500 hour salt spray test.

ELECTRICAL DATA

Motor horsepower	30 Hp
Motor Efficency	Premium efficiency
Enclosure	TEFC
Volts/Phase/Hz	460/3/60

CONTROL DATA

Controls	Discharge air temperature controlled. Motorized discharge air dampers for building pressure control.

Preferred vendor, but not limited to:
Manufacturer York
Model No CurbMaster

Other Manufacturers
1. Approved Equal

1. Approved _____ Date _____ 4. Approved _____ Date
2. Approved _____ Date _____ 5. Approved _____ Date
3. Approved _____ Date _____ 6. Approved _____ Date

Technical Specification

Section 15829B

Building Exhaust Monitoring

1.0 GENERAL

1.1 Work included

A. General

1. Sampling probe, lines and pumps.

A probe in the stack will draw a sample stream down to sampling/monitoring instruments. The line will then return to the stack down stream of the sample point.

2. Samplers.

The primary sample line will branch into secondary lines to feed a particulate sample and iodine sampler, and a Carbon-14/Tritium sampler.

3. Monitor.

A second stack probe will draw a sample to a continuous air monitor (CAM) measuring air particulate radioactivity. An alarm on the CAM will be routed to the control room.

2.0 PRODUCTS

A. This Section specifies the requirements for the following.

1. Record Sampler (including filter).
1a. Carbon-14/Tritium Gas Train Assembly
2. Continuous Activity Monitor .
3. Sample Pitot tube and Nozzles
4. Flow Indicators
5. Control Modules
6. Data Logger
7. Vacuum Pumps
8. Flow Control Valves
9. Main Panel

2.1 Record Filters

The main sampling line shall draw sample air through a particulate filter inside a removable housing (filter cartridge.) Sample flow shall be maintained isokinetic relative to stack flow. See item 2.5 (Flow Indicators) and 2.6 (Flow Control Modules).

A. There shall be a radiation particle collection filter and iodine collection carbon filter.
B. The record filters shall be housed in an approved enclosure mounted at floor level.
C. Filter housing assembly shall be of a design such that removal of filters for analysis is simplified.
D. Filters shall be sized so that at permit operating level the filters need be changed <u>weekly</u>.

2.1a Carbon-14/Tritium Gas Train Assembly

A branch line, after the Record Filters shall deliver sample air to a Carbon-14/Tritium Gas Sample train.

A. There shall be a low-flow Carbon-14/Tritium Gas Train assembly.
B. Assembly shall have (3) three bubbler jars. One containing Tritium absorbent media, another containing Carbon-14 absorbent media, and (1) one containing a silica gel column.
C. Assembly shall be of a design such that removal for analysis is simplified.
D. Assembly shall be sized so that at permit operating level the media need be changed <u>weekly</u>.

2.2 Continuous activity monitor

A. The CAM shall be an Eberline AMS-4beta/gamma monitor with a remote detection head.
B. The Remote detection head shall be housed in an approved enclosure near the Main Panel.
C. All CAM alarms shall be locally annunciated. Contacts shall be provided for remote annunciation.

2.3 Sample pitot tube and nozzles

A. The pitot tube, number and size of sample nozzles shall be sized for a 72” (OD) duct diameter to satisfy ANSI N13.1.
B. Piping from pitot tubes shall be straight will no bends. If bends are required, smooth sweeping bends are required.

2.4 Flow indicators

A. The flow indicators shall calculate the flowrate of the samples from a pressure input.
B. There shall be a flow indicator for the stack, Record Sample, Carbon-14/Tritium Gas Train, and CAM.
C. The stack and Record Sample flow indicators shall transmit its data to the Record Sample flow Control Module to maintain isokinetic flow.
D. The flow indicators shall be housed inside the Main Panel.

2.5 Control modules
- A. There shall be a control module to modulate the Record Sample flow valve to maintain isokinetic sampling. See item 2.9 (Control Valves).
- B. Each control module shall accept an input from either a pressure sensor, or a flow indicator.
- C. There shall be an adjustable setpoint and P,I,D, values.
- D. The Carbon-14/Tritium Gas Sample Train and CAM shall have a control module to set the respective flow valve.
- E. The process variable, the output, and the setpoint shall be visible on the face of the unit.
- F. The control modules shall be housed inside the Main Panel.

2.6 Data logger
- A. The data logger shall display the flowrates, alarms, and events on an integral display.
- B. All flowrates, alarms, and events shall be recorded on a memory chip. The memory chip shall have software provided to download into a Microsoft Excel spreadsheet. A means to monitor the capacity available on the memory chip shall be provided as to minimize interruptions to sampling and maximize data collection.
- C. The data logger shall annunciate alarms and fault events.
- D. The data logger shall be housed at the Main Panel.

2.7 Vacuum pumps
- A. There shall be two vacuum pumps in a lead/lag configuration. The lead pump shall be selectable by switch on cover of Main Panel.
- B. There shall be automatic switchover from lead to lag pump in event that lead pump fails. Failure determined by vacuum pressure switch.
- C. The vacuum pumps shall be housed in the Main Panel.

2.8 Control valves
- A. There shall be a flow control valve for each sample-- Record Sample, Carbon-14/Tritium Gas Train and CAM.
- B. All three valves to be controlled from their individual control modules.
- C. The Record Sample flow shall be isokinetic to the stack flow.
- D. The control valves shall be housed in the Main Panel.

2.9 Main panel
- A. The main panel shall be a free standing hinged door enclosure. The door shall have windows for viewing the necessary equipment-- flow indicators, setpoints.
- B. The status lights and switches shall be mounted on the door, and labeled appropriately.
- C. The enclosure shall have a ventilation fan and filter kit for cooling the enclosure.
- D. There shall be one termination point for electrical power circuit feed. All power required by monitoring equipment shall originate from this point.
- E. All internal wiring shall be completed at the factory. Interconnecting wiring from filter housing to CAM excluded.
- F. Overcurrent for the electrical components shall be located inside the enclosure and labeled appropriately.

3.0 EXECUTION

3.1 Design specifications

Stack Size:	72”(o.d.)
Stack Air Volume:	Maximum 90,000 cfm
	Nominal 90,000 cfm
Discharge Air Temp:	60 - 90 F
Stack Velocity:	3200 fpm
Stack Cross-sectional Area:	28.2 sq. ft
Site Elevation:	378 ft above sea level.
Building Temperature:	60-90 F

4.0 SURVEILLANCE, MAINTENANCE, & CALIBRATION

4.1 Introduction

- A. All procedures to be implemented as per the manufacture recommendations/procedures.

B. During Surveillance the following should be done (4-6hrs):
   1. measured value to be recorded, status of lights to be recorded;
   2. devices should be noted for visible problems: leaks, cracks, disconnected wires, moisture inside displays, cracked displays, etc.

C. During Functional Testing the following items should be inspected (6 months):
   1. each on/off switch device shall be actuated to show proper function. (i.e. alarm sounds, pump starts, etc.);
   2. each indicating device shall be modulated to show proper function. (i.e. alarm sounds, etc).

D. During Preventative Maintenance the following items should be inspected (annually):
   1. inspect wires insulation and sample tubing for cracks, scars, deterioration, and loose connections;
   2. inspect for liquid/air leaks;
   3. inspect for warping due to heat and/or stress;
   4. removing any dust accumulation from internal components;
   5. vacuum pumps to be maintained per manufacture procedure and frequency.

E. Calibration shall be performed as required by manufacture (annually).
F. If problems are detected during the above procedures (parts C through F), they shall be reported to the on shift supervisor, and corrective action taken.

END OF SECTION

Area/Location _

Equipment No. **GV-09-EFU-2263** **Building Exhaust Unit - Gasvit #1**
GV-09-EFU-2264 **Building Exhaust Unit - Gasvit #2**

Process Media

Gasses	Air
Vapors	trace VOC's
Solids	trace radioactive particulate
Temperature	70 °F
Pressure	Ambient - 10" w.g.

GENERAL

Unit description	Packaged exhaust train to include blower, housing, and filter bank.
Filter types	High-Efficiency Gas Adsorber HEPA 80% Prefilter
Filter sizes	HxW=24"x24", Depth as required for residence time

BLOWER PERFORMANCE

Flow rate	40,000 Scfm
Fan static pressure	8" w.g.

FILTER PERFORMANCE

Total housing pressure drop	<3.5" w.g.
HEPA efficiency	99.97%
HEGA efficiency	99.9%
HEGA residence time	.125 sec.

BLOWER CONSTRUCTION

Impeller	Aluminum
Housing	Steel, all welded scroll, acrylic epoxy coating
Standards compliance	AMCA
Drive	Belt driven, adjustable sheave
Motor	Sealed, ball bearing, on adjustable base

HOUSING CONSTRUCTION

Type	Bag-in/Bag-out, Knife edge seal
Material	14 ga. SS
Standards compliance	ASME N509/510, AG-1
Additional features	Provide 16" wide coil section downstream of filters for possible addition of heat recovery coil.

Prefered vendor, but not limited to:
Manufacture/Vendor Flanders, Barneby & Sutcliffe, American Air Filter

Other Vendors;
Manufacture/Model No. _____
1.
2.
3.

1. Approved _____ Date _____ 4. Approved _____ Date
2. Approved _____ Date _____ 5. Approved _____ Date
3. Approved _____ Date _____ 6. Approved _____ Date

Technical Specification

Section 15829C

Building toxic Gas Monitoring

Area/Location: Stabilization

Equipment No. **Toxic Gas Monitor**

Process and Instrumentation Diagram:

Process Media

Liquid	N/A
Gasses	Building Exhaust
Vapors	N/A
Solids	N/A
Moisture Content	<50%
Temperature	Ambient
Pressure	Atmospheric

SCOPE

Unit Description: Portable detection of combustible gases, O2, H2S, and CO using a diffusion sampling method.

PERFORMANCE

Range

Combustible gasses	0-99% lel
Oxygen	0-40% vol
H2S	0-99.5ppm
CO	0-500ppm

Accuracy

Combustible gasses	2%lel for 0-20% range; 5% lel up to 100% range
Oxygen	0.5%
H2S	1.5ppm for 0-30ppm range; 5% up to 100% range
CO	5ppm for 0-50ppm range; 15ppm for up to150ppm range; 25ppm for up to 500ppm.

DISPLAY

MINIMUM OF 2 DIGIT DISPLAY FOR COMBUSTIBLE GASSES, AND 3 DIGITS FOR O2, H2S, AND CO.

ELECTRICAL DATA

2 “C” size batteries, rechargable.
Intrinsically safe, UL classified Class 1 div. 1 groups A, B, C, and D.
Approx. 10 hours of operation on Alkaline batteries; 8 on Ni-Cad.

CONTROL

Type of controller	Touch screen
Alarms	80dB buzzer and individual LED lamps Adjustable setpoints for each gas detected.

OPTIONAL ACCESSORIES

Sample draw pump
Ni-cad batteries and charger

Preferred vendor, but not limited to:
Manufacturer: RKI Instruments, Inc.
Model No. GX-94

Other Manufacturers
1. Approved Equal

1. Approved _____ Date _____
2. Approved _____ Date _____
3. Approved _____ Date _____
4. Approved _____ Date
5. Approved _____ Date
6. Approved _____ Date

Technical Specification

Section 15840

Process Vent Ductwork

PART 1 -- GENERAL

1.1 WORK INCLUDED

A. This Section specifies the requirements for all labor, materials, equipment and services necessary for the installation of process exhaust duct systems

1.2 RELATED WORK

A. This section shall be used in conjunction with the following other specifications and related Contract Documents to establish the total requirements for process exhaust ductwork.

1. Section 1500 – General Installation Requirements

1.3 QUALITY ASSURANCE

A. Standards

1. American Conference of Governmental Industrial Hygienists (ACGIH)
   a. Industrial Ventilation: A Manual of Recommended Practice
2. National Fire Protection (NFPA)
   a. 91 - Exhaust Systems for Air Conveying
3. Sheet Metal and Air Conditioning Contractors' National Association (SMACNA)
   a. SMACNA IDC - Accepted Industry Practice for Industrial Duct Construction.
   b. SMACNA RIDCS - Round Industrial Duct Construction Standards
   c. SMACNA IV - Accepted Industry Practice for Industrial Ventilation

B. System Design

1. All process exhaust systems shall be designed in strict accordance with NFPA 91, ACGIH Industrial Ventilation and SMACNA IV. The systems shall be designed to be dynamically balanced without the use of blast gates.

PART 2 – PRODUCTS

2.1 DUST COLLECTION EXHAUST SYSTEMS:

A. Ductwork: Low carbon austentic Type 316 stainless steel ductwork. All ductwork shall be round and thicknesses shall be in accordance with SMACNA IDC and RIDCS

B. Duct Construction: Heliarc weld all longitudinal and cross-joint seams and shop fabricated joints except as otherwise noted. All welding shall conform to AWS structural code. Grind and polish all welds. Construct all duct in accordance with SMACNA RIDCS.

C. Elbows: Elbows and bends should be a minimum of two gauges heavier than straight lengths of equal diameter and have a centerline radius of at least two times the duct diameter. Elbows of 90-degree should be of a five piece construction for found ducts up to six inches and of a seven piece construction for larger diameters.

D. Branch Connections: All branches should enter the main at the center of the transition at an angle not to exceed 45-degrees with 30-degree to be used wherever possible. Connections shall be to the top or side of the main, with no two branches entering at opposite sides.

E. Blast Gates: Blast gates shall be provided with a means of locking dampers in place after adjustments have been made.

F. Fire Dampers: Install fire dampers and explosion vents in accordance with NFPA. All fire dampers must be constructed in accordance with Underwriters' Laboratories and city code requirements. Dampers shall be of the type with the open damper out of the airstream for 100% free area.

G. Access Doors and Panels:

1. Access Doors: Construct access doors of stainless steel 2 gauges heavier than the duct, with rolled edges, hinges, VentFabrics Inc. "Ventlock" #210 latch, made airtight with felt strips or neoprene gasketing,
2. Access Panels and Access Openings in Ductwork: Stainless steel, 2 gauges heavier than

the duct with rolled edges, felt strips or neoprene gasketing.

2.2 FUME EXHAUST SYSTEMS:

A. Ductwork: Low carbon austentic Type 316 stainless steel ductwork. All ductwork shall be round and thicknesses shall be in accordance with SMACNA IDC and RIDCS

B. Hoods: Hoods shall be a minimum of two gauges heavier than straight sections, free of sharp edges or burrs, and reinforced to provide necessary stiffness.

C. Duct Construction: Heliarc weld all longitudinal and cross-joint seams and shop fabricated joints except as otherwise noted. All welding shall conform to AWS structural code. Grind and polish all welds. Construct all duct in accordance with SMACNA RIDCS.

D. Elbows: Elbows and bends should be a minimum of two gauges heavier than straight lengths of equal diameter and have a centerline radius of at least two times the duct diameter. Elbows of 90-degree should be of a five piece construction for found ducts up to six inches and of a seven piece construction for larger diameters.

E. Branch Connections: All branches should enter the main at the center of the transition at an angle not to exceed 45-degrees with 30-degree to be used wherever possible. Connections shall be to the top or side of the main, with no two branches entering at opposite sides.

F. Blast Gates: Blast gates shall be provided with a means of locking dampers in place after adjustments have been made.

G. Fire Dampers: Install fire dampers and explosion vents in accordance with NFPA. All fire dampers must be constructed in accordance with Underwriters' Laboratories and city code requirements. Dampers shall be of the type with the open damper out of the airstream for 100% free area.

H. Access Doors and Panels:

1. Access Doors: Construct access doors of stainless steel 2 gauges heavier than the duct, with rolled edges, hinges, VentFabrics Inc. "Ventlock" #210 latch, made airtight with felt strips or neoprene gasketing,

2. Access Panels and Access Openings in Ductwork: Stainless steel, 2 gauges heavier than the duct with rolled edges, felt strips or neoprene gasketing.

PART 3 -- EXECUTION

3.1 INSTALLATION

A. Installation: Install all process exhaust ductwork in strict accordance with SMACNA standards.

B. Duct Supports: Support duct at each joint and as requried by SMACNA IDC. Duct supports shall be of sufficient capacity to carry the weight of the system plus the weight of the duct half filled with material and no load placed on the connecting equipment.

C. Provide adequate clearance between ducts and ceilings, walls and floors for installation and maintenance.

D. Measurements: Before fabrication, check all ductwork with the building construction for dimensions, location, clearances, etc. Make up ducts with any necessary variations to conform to the details of the construction of the buildings, to suit the place available and to fit the equipment furnished. The entire duct system must be substantially constructed, rigidly erected and free of any duct vibration or noises.

E. In ducts conveying moisture laden air, the ducts shall be liquid tight and shall have provisions made for proper sloping and drainage.

F. Flashing: Flash all ducts passing through the roof or floor or through walls with 18 gauge stainless steel heliarc welded to duct.

G. Access: Install necessary access openings and covers for cleaning, wiring or servicing motors, fire dampers, filters, fans, and to other equipment located within or blocked by ductwork. Where the air contaminant includes particulates that may settle in the ducts, clean out doors shall be provided in horizontal runs, near elbows, junctions and vertical runs.

H. Duct Penetrations: Terminate duct insulation of each side of a penetration through a rated wall, floor, or ceiling. Clearance around duct should not exceed 1/2 inch average

on all sides, and should be fire-stopped by packing with mineral wool or other noncombustible material.

I. Fire Dampers: Install damper in frame around penetration for an installation independent of duct support. Check damper operation and install fusible links.

3.2 DUCT LEAKAGE TESTS

A. General:

1. Duct risers and branches shall be individually tested. Each riser and branch shall be isolated from remainder of system by seals, plugs, caps, etc. Branches shall include terminal boxes.

B. Test Equipment:

1. Shall consist of blower with inlet damper having minimum capacity of 1 percent of total CFM of system to be tested at 1.25 times fan static pressure.

2. Orifice plate or other calibrated airflow capacity testing device with straightening vanes for range of 0.005 percent to 1 percent of system capacity.

3. Two gages, one to read duct static pressure, the other to read airflow measuring device.

4. All other parts to facilitate testing, i.e., flexible connection, starter, extension cord, etc.

C. Test Pressures:

1. Mains and Risers: 1.25 times fan static pressure.

2. Horizontal Branches: 1.0 times fan static pressure.

D. Allowable Leakage: Total allowable leakage should not exceed 1 percent of the total system CFM. When partial sections of the duct system are tested, the summation of the leakage for all sections shall not exceed the total allowable leakage.

E. Test Failures: Duct systems shall be repaired if test leakage is not attained.

END OF SECTION

Technical Specification

Section 15841

Sheet Metal Monitoring (Low Pressure)

PART 1 -- GENERAL

1.1 WORK INCLUDED

B. This Section specifies the requirements for all labor, materials, equipment and services necessary for the installation of all low pressure (2-inches wg and less, positive and negative) sheet metal duct systems used for heating, ventilating and air conditioning.

1.3 RELATED WORK

A. This section shall be used in conjunction with the following other specifications and related Contract Documents to establish the total requirements for sheet metal ductwork

1. Section 15842 – Sheet Metal Ductwork (High Pressure)

PART 2 – PRODUCTS

2.3 GENERAL

A. Galvanized Sheet Metal: For all heating, ventilating and air conditioning ductwork except as otherwise specified.

2.2 GALVANIZED SHEET METAL DUCTWORK:

A. Galvanized Ductwork: Galvanized, prime-grade, lock-forming, quality steel (LFQ) having galvanized coating of 1-1/4 ounces total for both sides of 1 square foot of a sheet. Cross-break all sides of ducts.

B. Longitudinal Seams: Pittsburgh lock groove, hammered flat. Tape all transverse joints of supply, return and exhaust ducts per SMACNA.

C. Turning Vanes -- Sheet Metal Vanes: Factory fabricated, double thickness, galvanized sheet metal with airfoil contour. Shop fabricated duct turns must be submitted for approval prior to processing any work on project.

D. Flexible Duct: Flexible, preinsulated, vinyl coated fiberglass with corrosion resistant, steel spiral reinforcing, designed for low velocity application. All duct, insulation and adhesives shall be fire and smoke resistant in conformance with NFPA 90A and UL 181 for Class 1 duct. Duct shall be Thermaflex Type MK-D as manufactured by Flexible Tubing Co. or approved.

E. Flexible Connections: 24-ounce glass fabric that is flameproof, airtight, ozone resistant, and a minimum of 3" wide with 3" of metal on each side of 3" of fabric using a grip lock seam, Duro Dyne "Durolon" or approved equal.

F. Manual Dampers: Minimum of 16 gauge galvanized steel, maximum of 8" blade, opposed blade type, with manual quadrant.

G. Manual Quadrants: On all low pressure dampers Ventlock #644 in insulated ducts and #641 in uninsulated ducts, or approved equal.

H. Access Doors:

1. Uninsulated Ducts: Construct access doors of galvanized sheet metal .1 gauges heavier than duct with rolled edges, hinges, and Ventfabrics, Inc., "Ventlock" #260 latch. Make airtight with felt strips or neoprene gasketing and provide 1" X 1" X 1/8" galvanized iron frame for installation in ductwork.

2. Insulated Ducts: Double thickness galvanized sheet metal of same gauge as duct (minimum 20 gauge) with minimum of 1" thick, 2-pound density fiberglass or approved equal insulation in between sheet metal, rolled edges, hinges and Ventfabrics, Inc. "Ventlock" #260 latch. Make airtight with felt strips or neoprene gasketing, and provide 1" x 1" x 1/8" galvanized angle iron frame for installation in ductwork.

3. Access Panels and Access Openings in Ductwork: Galvanized sheet steel, 2 gauges heavier than the duct with rolled edges, felt strips or neoprene gasketing and attached to duct with sheet metal screws a maximum of 6" on center.

I. Fire Dampers: Furnish and install access panels as hereinbefore described to meet the requirements of UBC. All fire dampers must be constructed in accordance with Underwriters' Laboratories and city code requirements. Dampers shall be of the type with the open damper out of the airstream for 100% free area.

J. Duct Supports:

1. Ducts 47" and Smaller: 14 gauge steel hanger straps 1" wide riveted to seams of ducts, maximum of 6' -0" on center. Alternate support for horizontal ducts must be by (2) 1/4" bolts or 2 or more #14 sheet metal screws.

2. Ducts over 48" in Width: Support from trapeze hanger consisting of vertical steel rods and angle iron frames.

Duct Construction: All return and supply downstream of terminal units duct constructions must conform to the SMACNA Duct Manual for Low Velocity System (latest edition) and the following table:

CONSTRUCTION FOR RECTANGULAR SHEET METAL DUCTS

Steel U.S. Std. Ga.	Low Pressure Aluminum B & S Gauge	Duct Dimensions in Inches	Transverse Joints and Bracing
26	24 (0.020)	Up thru 12	S slip, drive slip 1" pocket lock on 8' centers.
24	22 (0.025)	13 thru 18	S slip, drive slip, 1" pocket lock on 8' centers.
24	22 (0.025)	19 thru 30	S slip, 1" pocket lock on 4' centers. S slip, 1" pocket lock on 8' centers with 1"x1"x1/8" angles 4' from joint. S slip, 1" pocket lock on 8' centers with cross-break 1" standing seam on 5' centers.
22	20 (0.032)	31 thru 42	1" standing S cleat bar slip, pocket lock on 4' centers. 1" standing S cleat, bar slip, pocket lock on 8' centers with 1"x1"x1/8" angle 4' from joint. 1" standing seam on 4' centers. Longitudinal standing seam with 1"x1"x1/8" angles on 4' centers.
22	20 (0.032)	43 thru 54	1-1/2" standing S cleat, bar slip, pocket lock on 4' centers. 1-1/2" standing S cleat, bar slip, pocket lock on 8' centers with 1-1/2"x1-1/2"x1/8" angles 4' from joint.
20	18 (0.040)	55 thru 60	Reinforcing same as for 43" thru 54" duct.

** CONT. FROM PREVIOUS PAGE **

Steel U.S. Std. Ga.	Low Pressure Aluminum B & S Gauge	Duct Dimensions in Inches	Transverse Joints and Bracing
20	18 (0.040)	61 thru 84	1-1/2" standing S cleat, bar slip, pocket lock on 4' centers with 1-1/2" x 1-1/2 x 1/8" angles, 2' from joint. 1-1/2" standing S cleat, bar slip, pocket lock on 8' centers with 1-1/2"x1-1/2"x1/8" angles on 2' centers. 1-1/2" standing seam on 3' centers. Longitudinal standing seams with 1-1/2"x1-1/2"x1/8" angles on 2' centers.
18	16 (0.051)	85 thru 96	1-1/2" standing S cleat, bar slip, pocket lock reinforced with 1-1/2"x1-1/2"x 1/8" or companion angles on 4' centers. 1-1/2" standing S cleat, bar slip, pocket lock reinforced with 1-1/2" x 1-1/2" x 3/16" or companion angles on 8' centers with 1-1/2" x 1-1/2" x 1/8" angles on 2' centers.

18	16 (0.051)	Over 96	1-1/2" standing S cleat, bar slip, pocket lock reinforced with 2" x 2" x 1/4" angles, or companion angles on 4' centers. 1-1/2" standing S cleat, bar slip pocket lock reinforced with 2"x2"x1/4" angles on 2' centers. Longitudinal standing seams with 2"x2"x1/4" angles on 2' centers.

Note: The recommended gauges for steel and aluminum sheet metal rectangular ducts are given in the table above. Steel or iron sheet are specified according to the manufacturer or U.S. Standard Gauge System. Aluminum sheets are specified according to the American or Brown & Sharpe Gauge System.

PART 3 -- EXECUTION

3.1 GALVANIZED SHEET METAL DUCTWORK:

A. Fabrication: Fabricate all ductwork and install using skilled mechanics in strict conformance with the SMACNA Manual for Low Velocity Ductwork (latest edition). Provide supplemental stiffening as required to prevent drumming and provide a structurally sound assembly.

B. Construction: Construct all fittings, elbows, and transitions to provide a minimum of noise and resistance. Where space permits, use elbows with a minimum radius of 1-1/2 times the width (or depth). Where space conditions necessitate abrupt changes in direction (or an otherwise indicated), use square elbows with double radius turning vanes. Transitions increasing in the direction of airflow shall not change greater than 1" in 7" and transitions decreasing in the direction of airflow shall not change greater than 1" in 5".

C. Turning Vanes: Provide double thickness turning vanes in all 90 deg square elbows and elsewhere as indicated. Use acoustical turning vanes where indicated.

D. Taping: Tape all cross-joints in concealed or insulated sheet metal ductwork with Arabol and canvas.

E. Weatherproofing: Make all ductwork exposed to weather weather-tight, seal all joints with a minimum of 2 coats of asphalt-based roofing compound painted with aluminum paint.

F. Duct Sizes: Indicated sizes are to the inside of acoustical linings. Increase the size of all sheet metal ducts as required to accommodate acoustical lining.

G. Duct Openings: Construct duct openings at grilles or registers so that the plaster will not crack when the registers are attached.

H. Painting: Paint the inside of all supply, return and exhaust ducts and dampers one coat of dead black paint whenever visible through the openings. Where the duct insulation is visible through the grilles, registers or diffusers, the insulation must have a black finish.

I. Flexible Connections: Provide flexible connections at the intake and discharge of all air handling and air conditioning units and elsewhere as indicated.

J. Manual Dampers: Provide manual dampers in each duct as indicated. Provide locking quadrants with memory stop.

K. Fire Dampers: Duct lining shall be interrupted at fire dampers to not interfere with proper operation. Install damper in frame around penetration for an installation independent of duct support. Check damper operation and install fusible links.

L. Measurements: Before fabrication, check all ductwork with the building construction for dimensions, locations, clearances, etc. Make up duct with any necessary variations to conform to the details of the construction of the building, to suit the place available, and to fit the equipment furnished. The entire duct system must be substantially constructed, rigidly erected and free of any duct vibration or noises.

M. Flashing: Flash all ducts passing through the roof, floor, or through exterior walls.

N. Support: Install Ductwork with 1 inch wide 16 gauge cradle hangers not more than 8 feet on center; attach to available building construction as per good practice for materials

involved. Attachment method to wood or wood and metal true must be specifically approved by truss manufacturer. Submit Shop Drawings.

O. Duct Penetrations: Terminate duct insulation of each side of a penetration through a rated wall, floor, or ceiling. Clearance around duct should not exceed 1/2 inch average on all sides, and should be fire-stopped by packing with mineral wool or other noncombustible material.

P. Duct Leakage Test:

1. General:

   a. Duct risers and branches shall be individually tested. Each riser and branch shall be isolated from remainder of system by seals, plugs, caps, etc. Branches shall include terminal boxes.

2. Test Equipment:

   b. Shall consist of blower with inlet damper having minimum capacity of 1 percent of total CFM of system to be tested at 1.25 times fan static pressure.

   c. Orifice plate or other calibrated airflow capacity testing device with straightening vanes for range of 0.005 percent to 1 percent of system capacity.

   d. Two gages, one to read duct static pressure, the other to read airflow measuring device.

   e. All other parts to facilitate testing, i.e., flexible connection, starter, extension cord, etc.

3. Test Pressures:

   a. Mains and Risers: 1.25 times fan static pressure.

   b. Horizontal Branches: 1.0 times fan static pressure.

4. Allowable Leakage: Total allowable leakage should not exceed 1 percent of the total system CFM. When partial sections of the duct system are tested, the summation of the leakage for all sections shall not exceed the total allowable leakage.

5. Test Failures: Duct systems shall be repaired if test leakage is not attained.

END OF SECTION

Technical Specification

Section 15842

Sheet Metal Monitoring (High Pressure)

PART 1 –GENERAL

1.1 WORK INCLUDED

A. This section specifies the requirements for the use of high pressure duct for all discharge ductwork from air handling or air conditioning units scheduled in excess of two inch external static pressure to the various terminal units. This shall be without regard to actual air velocities involved.

1.2 RELATED WORK

A. This section shall be used in conjunction with the following other specifications and related Contract Documents to establish the total requirements for sheet metal ductwork.

1. Section 15840 – Sheet Metal Ductwork (Low Pressure)

PART 2 -- PRODUCTS

2.1 GALVANIZED SHEET METAL DUCTWORK

A. Galvanized Sheet Steel: Galvanized, prime grade, lock-forming quality steel (LFQ) having a galvanized coating of 1-1/4 ounces total for both sides of one square foot of a sheet.

B. Duct Sealing Compound: Duro-Dyne Type S-2, or approved equal, liquid or mastic type sealant suitable for high pressure ductwork. Use mastic type sealant for application as a filler or in grooves. Where a welded joint is used in conjunction with a mechanical seam, use a non-flammable type sealant.

C. Tapes: All tapes shall be compatible with the wet sealant, and shall not react with the tape to decrease the bonding ability of the tape or the sealant. The tape shall be a minimum of two inches wide, polyvinyl treated, open weave, fiberglass.

D. Flexible High Pressure Duct: Flexible, pre-insulated vinyl coated fiberglass with corrosion resistant steel spiral reinforcing, designed for high velocity applications. All duct, insulation and adhesives shall be fire and smoke resistant in conformance with NFPA-90A and UL 181 for Class 1 duct. Duct shall be Thermaflex Type MK-HG as manufactured by Flexible Tubing Co. or approved equal.

E. Round and Oval Duct: Galvanized sheet steel with reinforced welded longitudinal seams or lock-type spiral seams fabricated from standard high pressure conduit. All fittings shall be standard design fittings of the same manufacture as the duct. All 90 elbows eight inches in diameter and larger shall be five section, seven inches and smaller shall be a minimum of two piece die stamped construction. Branch take-offs to outlet boxes shall be set at 45 to the trunk duct in the direction of the air flow, with field or factory made fittings. All reductions in duct size shall be made with factory fabricated reducing couplings. Elbows with heel taps will not be acceptable.

F. Flexible Connections: 30-ounce, closely woven, neoprene coated, glass fabric that is fire retardant, waterproof, air tight, minimum of six inches wide and suitable for high pressure application.

G. Manual Dampers: Minimum of 16 gauge galvanized steel, maximum of eight inch blade, opposed blade type, with manual quadrant.

H. Manual Quadrants: On all high pressure manual dampers, Young 453G, in insulated ducts or inaccessible ducts, 433G in uninsulated ducts, or approved equal. In inaccessible locations (above plaster ceilings, etc.) provide damper (Young #617), 3/8" rod, and extend to Young #325 flush mounted damper regulator, cadmium plated, suitable for painting, complete with indicator to show position of damper and operating wrench.

I. Turning Vanes:

1. Sheet Metal Vanes: Factory fabricated, double thickness, galvanized sheet steel with airfoil contour. Shop fabricated duct turns shall be submitted for approval prior to progressing with any work on project.

2. Acoustical Turning Vanes: Double thickness, galvanized sheet steel or aluminum, nonreflective airfoil contour type vane with perforated surface, a core of sound absorbent material, and nailing channels for attachment to ducts.

J. Access Panels and Doors:

1. Uninsulated Ductwork: Install with 1" x 1" x 1/8" thick reinforced angle frames and make airtight with felt strips or neoprene gasketing. Latches Ventlock No. 333, as manufactured by Ventfabrics, Inc., or approved equal.
2. Access Panels and Access Openings in Ducts: Galvanized sheet steel two gauges heavier than the duct and provided with a rolled steel metal edge, sealed airtight to the duct with felt strips or neoprene gasketing and attached to duct with sheet metal screws a maximum of 6" on center.
3. Insulated Ductwork: Double thickness galvanized sheet metal of same gauge as duct (minimum 20 gauge) with a minimum of 1-1/2" thick fiberglass, 3-pound density insulation between sheet metal, rolled edges, hinges and Ventfabrics, Inc., "Ventlock" #333 latches.

K. Fire dampers with access panels furnished and installed as described hereinbefore to meet the requirements of the UBC. All fire dampers shall be constructed in accordance with U.L. and city code requirements. Dampers shall be of the type with the open damper out of the airstream for 100% free area.

L. Duct Supports: Support all ducts from hanger straps or hanger rods as specified herein or in the SMACNA Manual for High Velocity Duct Construction, latest edition. Ducts with a maximum dimension of 60" shall be supported on not lighter than 1" wide, 16 gauge galvanized steel strap or 3/8" diameter steel rods, a maximum of 8 foot on center. Support ducts 61" to 120" with 2" x 2" x 1/4" thick galvanized steel angle trapeze and 3/8" diameter steel rods. Support ducts 121" to 240" maximum dimension with 2-1/2" x 2-1/2" x 3/16" thick galvanized steel angles and 3/8" diameter steel rod supports. See additional details on the drawings.

PART 3 -- EXECUTION

3.1 Duct Construction (Round and Oval Duct): Use galvanized sheet metal for all round and oval ductwork complete with all fittings, reinforcing, bracing, etc., as required. See drawings for sizes and locations of ductwork.

3.2 Fabrication: Carefully plan and coordinate with other trades to assure straight, unbroken runs of ducts with a minimum of offsets and transitions. Do not fabricate and erect ductwork that varies substantially from that indicated without prior written approval.

3.3 Joints: All joints and seams in fabricated ducts and fittings must be carefully cut and trimmed to form a tight joint. No portion of the duct or fittings shall protrude into the air-stream. All factory fabricated fittings and joints must be brazed with everdur rod or made up with a slip joint using sheet metal screws and duct sealing compound. Ducts made up with duct sealer shall have a minimum of 2" overlap and be sealed with duct sealing compound (as hereinbefore described) applied to both parts for the full length of the overlap. Secure the joints with drive screws spaced not more than 6" on center around the duct using a minimum of 3 screws. Tape all joints with 3 overlap layers of approved industrial tape, each applied over a fresh layer of duct adhesive.

3.4 Gauges: Sheet metal gauges for round ductwork, girth reinforcing, girth joints, etc., shall be as described in SMACNA Manual for High Velocity Duct Construction Standards, latest edition.

3.5 Duct Construction (Square and Rectangular Ductwork): Construct all rectangular ducts of galvanized sheet steel (as hereinbefore described). All side of ducts shall be cross-broken and reinforced as hereinafter described. Ducts shall be complete with all fittings, reinforcing, bracing, etc., as specified herein and required for proper assembly.

3.6 Longitudinal Seams: Pittsburgh lock, hammered flat and welded or made up with sealing compound as follows:

3.7 Longitudinal seams may be made up with duct sealing compound (as hereinbefore specified) applied to a Pittsburgh lock and hammered flat. In addition, coat the inside seam with duct

sealing, compound in combination with a polyvinyl coated, open weave, fiberglass tape 2" wide. Submit details for fabrication before progressing on any work.

3.8 Transverse Joints: May be welded flange joints, gasketed flanged connections or other joints as recommended in Section 2 of the SMACNA Duct Manual (latest edition), with suitable reinforcement at the joints and between joints as required.

3.9 Joints in factory-made ducts and fittings may be brazed with an everdur rod or may be made as follows:

3.10 All joints shall have a minimum overlap of 2" and shall be sealed with adhesive applied to both parts for the full length of the overlap. The joints shall be secured with drive screws spaced not over 6" apart, around the duct, with not less than 3 screws. Joints shall then be taped with 3 layers of approved industrial tape applied over a fresh layer of the adhesive.

3.11 Rectangular duct transverse joints may be joined with the ductmate system at the Contractor's option.

3.12 Transverse Joints, Round or Oval (Alternate):

The sealing of duct joint and fitting connections of high and medium velocity, buried or suspended air conditioning duct systems where round and/or flat oval duct and fitting connections are used shall be sealed by
using the Termofit Air Conditioning Duct Sealing Band (TDB) as manufactured by Rayclad Tubes, Inc.

The duct band shall be made in a one-piece unit for each duct diameter and supplied in its expanded form. It shall be internally coated with a heat activated adhesive. When exposed to heat in excess of 250 F, the duct band shall shrink and the adhesive melt. Pressure of the shrinking bank shall force the molten adhesive into void areas of the connection. As the duct band cools, it shall provide permanent mechanical strength and a positive pressure seal against loss of internal pressure or external ingress of moisture.

3.13 Fabricated Ducts: All joints and seams in fabricated ducts and fittings shall be carefully cut and trimmed to form a close joint with no portion of the duct or fitting protruding into the airstream.

3.14 Duct Construction: All rectangular High velocity ductwork for static pressures of 6" and less shall be constructed of galvanized sheet steel as herein specified and sized from the following table:

Greatest Duct Dimension	Gauge of Metal
Up to 30"	30
31" to 54"	28
55" and above	16

All sides of ducts shall be cross-broken and shall be braced with girth angels brazed to duct at not over 24" on center, sized as follows:

Greatest Duct Dimension	Angle Size
Up to 30"	1" x 1" x 1/8"
31" or greater	1-1/2" x 1-1/2" x 1/8" with the rod in center for ducts larger than 60"

3.15 Elbows: Square elbows shall be used only where shown and shall have double radius acoustical turning vanes installed in strict conformance with manufacturer's recommendations.

Transverse joints in square or rectangular duct may be made with the Ductmate system.

3.16 Testing: All portions of the high velocity ductwork shall be tested and approved before insulation is applied.

The ductwork may be tested in sections with ends temporarily capped. The duct test pressure shall be 8" of water, and leakage during test shall not exceed 1/2% of the total design airflow through that portion of the system. All detectable leaks shall be repaired even through the duct passes the leakage test.

The above leakage tests shall be performed prior to the installation of the attenuator boxes. Connections to attenuator boxes shall be tested at 8" static pressure and detectable leaks repaired.

The above tests shall be performed with equipment consisting of a small high pressure blower, U-tube water manometer, calibrated orifice test pipe assembly with orifice section and diffusion plate, and interconnecting cocks and tubing. The apparatus shall be arranged to allow easy operation and simple changeover from static pressure to flow measurements. The equipment shall be similar to that manufactured by United Sheet Metal Company.

END OF SECTION

Technical Specification

Section 15822

Blowers

PART 1 – GENERAL

1.1 WORK INCLUDED
A. This Section specifies the requirements necessary to furnish and install, complete, centrifugal fans.

1.2 RELATED WORK
A. This Section shall be used in conjunction with the following other specifications and related Contract Documents to establish the total requirements for exhaust fans:
1. Section 15000 – General Installation Requirements.
2. Section 15130 – Indicating Devices
3. Division 16
4. Data Sheets included at the end of this Section.

CAUTION! Use of this Section without including the above-listed items will result in omission of basic requirements.

B. In the event of conflict regarding requirements for the referenced fans between this Section and any other section, the provisions of this Section shall govern.

1.3 DESIGN CRITERIA
A. Where sparkproof construction requirements are noted, the equipment shall be built and installed in accordance with current AMCA Standards for Type C nonsparking construction.
B. Multiple drive belts shall be provided where motor horsepower is 1/2 hp or larger. Belt guards shall be easily removable by one person. Tachometer access holes shall be large enough to accept standard tachometer drive shaft.
C. Fans shall operate at speeds less than 80 percent of their true critical speed.

1.4 SUBMITTALS
A. Provide the following:
1. Full load and part load fan performance curves showing bhp requirements versus air quantity handled, static pressure versus air volume.
2. Sound power level data at design operating point and at 50 percent capacity. Ratings shall be based on AMCA Standard 300, setup No. 2. Provide data for an eight octave band analysis. As an alternative, sound intensity measurements may be acceptable.
3. Detailed information on structural, mechanical, electrical, and other services necessary to evaluate installation requirements.

PART 2 -- PRODUCTS

2.1 CENTRIFUGAL EXHAUST FANS
A. Acceptable Manufacturers:
1. Brod & McClung-Pace Company.
2. Buffalo Forge.
3. Hartzell
4. New York Blower.
B. Description: centrifugal fan tested and rated in accordance with AMCA standards for the service class, width inlet, and arrangement as scheduled in the Drawings.
C. Fans: backward-inclined wheel with flat or airfoil blades statically and dynamically balanced. Heavy gauge steel housing with factory standard finish.
D. Drive:
1. Where indicated on the data sheets, provide an adjustable frequency drive in accordance with the requirements of Section 15130.
2. V-belt drive with cast iron or forged steel fan and motor sheaves selected for 150 percent of motor horsepower. Provide multiple belt drives on all units over 1/2 hp. Belt guard shall have provisions for adjustment of belt tension, lubrication, and use of tachometer with guard in place.

E. Bearings: self-aligning, grease-packed heavy-duty pillow block type, rated for 200,000-hour service life (L-10).
F. Motors: Motors shall be in accordance with the requirements of Division 16
G. Drain: Provide 1-1/2-inch drain at low point in fan scroll with plug.
I. Provide an access door to serve as an inspection port in the scroll housing.

PART 3 -- EXECUTION

3.1 INSTALLATION
A. Isolate sheet metal duct connections from all fan units. Locate units to provide access spaces required for motor, drive, and bearing servicing, and fan shaft removal. Perform the manufacturer's lubrication requirements prior to startup.
B. Install in accordance with manufacturer’s requirements.

END OF SECTION

Equipment No. **GV-09-BLO-0925** **GASVIT Process Vent Blower**

Process and Instrumentation Diagram: **31001-P-079**

Process Media

Gasses	Air
Vapors	N/A
Solids	N/A
Temperature	75 °F
Pressure	- 19”w.g.

SCOPE

Fan type	Backwardly inclined, SWSI, Airfoil
Configuration	Bottom angular up

CAPACITY/THROUGHPUT

Flow Rate	2,900 Scfm

PERFORMANCE

Fan static pressure	19” w.g.

CONSTRUCTION

Impeller	Standard heavy gauge steel
Housing	Standard heavy gauge steel
Nominal Wheel Diameter	22-inch
Standards compliance	AMCA Pub 99, Class II
Bearings	Oversized roller
Vibration Isolators	Spring isolators supporting a common structural steel support pad

FINISHES AND PROTECTIVE COATINGS

Exterior Coating	Manufacturer’s Standard
Interior Coating	Manufacturer’s Standard

ELECTRICAL DATA

Motor horsepower	15 hp
Motor Enclosure	TEFC
Volts/Phase/Hz	460/3/60
Drive	Variable frequency drive

CONTROL DATA

Control	On/off control; manual speed adjustment with VFD

Prefered vendor, but not limited to:
Manufacturer: Hartzell
Model No: 052-19AH

Other Manufacturers
1. Pace
2. New York Blower

Equipment No. **GV-22-EFU-2263** **Building Exhaust Unit Blower – Gasvit #1**
GV-22-EFU-2264 **Building Exhaust Unit Blower – Gasvit #2**

Process and Instrumentation Diagram: **31001-P-092-02**

Process Media

Gasses	Air
Vapors	N/A
Solids	N/A
Temperature	75 °F
Pressure	- 7”w.g.

SCOPE

Fan type	Backwardly inclined, SWSI, Airfoil
Configuration	Bottom angular up

CAPACITY/THROUGHPUT

Flow Rate	40,000 Scfm

PERFORMANCE

Fan static pressure	7” w.g.

CONSTRUCTION

Impeller	Standard heavy gauge steel
Housing	Standard heavy gauge steel
Nominal Wheel Diameter	54-inch
Standards compliance	AMCA Pub 99, Class II
Bearings	Oversized roller
Drive	Belt drive with adjustable sheave
Vibration Isolators	Spring isolators supporting a common structural steel support pad

FINISHES AND PROTECTIVE COATINGS

Exterior Coating	Manufacturer’s Standard
Interior Coating	Manufacturer’s Standard

ELECTRICAL DATA

Motor horsepower	75 hp
Motor Enclosure	TEFC
Volts/Phase/Hz	460/3/60

CONTROL DATA

Control	On/off control

Prefered vendor, but not limited to:
Manufacturer: Hartzell
Model No: 54-BC

Other Manufacturers
1. Pace
2. New York Blower

Technical Specification

Section 15885

Air Cleaning Devices

Equipment No. **GB-22-EU-0251** **Building Exhaust HEPA Filter Bank #1**
GB-22-EU-0252 **Building Exhaust HEPA Filter Bank #2**

Process and Instrumentation Diagram **31001-P-029-02**

Process Media

Gasses	Air
Vapors	
Solids	
Temperature	75 °F
Pressure	Ambient - 7”w.g.

SCOPE

Unit description	Complete prefilter, HEPA filter, charcoal filter and housing assembly; 2’x2’ filter modules 10’ high by 12’ wide. Access on both sides, stainless steel construction, 24” deep plenums on both ends, filter gauge ports, non-testable
CAPACITY/THROUGHPUT	
Flow rate	54,000 SCFM
PERFORMANCE	
HOUSING	
Total housing pressure drop	< 3.5” w.g.
PREFILTER	
Efficiency	80% per ASHRAE Standard 52.
HEPA FILTER	
Efficiency	99.97%
CHARCOAL FILTER	
Efficiency	99.9%
Residence Time	0.125 Seconds
CONSTRUCTION	
HOUSING	
Type	Bag-in/Bag-out, Knife edge seal
Material	14 ga. Stainless Steel
Standards compliance	ASME N509/510, AG-1
PREFILTER	
Filter type	24”x24” fiberglass mat, side loaded into filter housing
HEPA FILTER	
HEPA Filter type	Nuclear-grade, 24”x4”x11” deep filters for side access filter housing. Neoprene gasket on upstream face rated at 1,000 cfm/filter
CHARCOAL FILTER	
Filter type	Activated carbon adsorption frame-type units rated at 2,000 cfm per 24”x24”module
Maximum Temperature	200 °F
Frame	14-gauge stainless steel
FINISHES AND PROTECTIVE COATINGS	
Exterior Coating	N/A
ELECTRICAL DATA	
N/A	
CONTROL DATA	
N/A	

Preferred vendor, but not limited to:
Manufacturer American Air Filter
Model No

Other Manufacturers
1. Flanders
2. Barneby & Sutcliffe

Equipment No.		
	TP-02-DC-0209	**Ferrous Metal Dust Collector**
	TP-02-DC-0210	**Non-Ferrous Metal Dust Collector**
	TP-02-DC-0211	**Dust Collector (Cutting and Shearing)**

Process and Instrumentation Diagram **31001-P-028-01**

Process Media

Gasses	Air
Vapors	N/A
Solids	Metal Shavings (ferrous and non-ferrous) from cutting operations
Temperature	75 °F
Pressure	- 10”w.g.

SCOPE

Unit description	Modular cartridge type dust collector with continuous compressed air purge, hopper with slide gate with a sealed connection to discharge drum. Unit shall be suitable for operation in a hazardous environment and for conveying hazardous materials. Unit shall be sized to minimize the amount of filter changes.
CAPACITY/THROUGHPUT	
Flow rate (Each)	600 SCFM (DC-0209, 0210)
Flow rate (Each)	600 SCFM (DC-0211)
UNIT PERFORMANCE	
Total housing pressure drop (loaded)	5-inches w.g.
Filter Efficiency	99.999% on particles >/= 0.5 micron.
Air-to-Cloth Ratio	1.5:1
Minimum Filter Area	400 sq. ft.
CONSTRUCTION	
HOUSING	
Type	Welded heavy gauge steel construction
Rating	+/-20 inches water
Seismic Zone	3
Options	Hose and drum cover for 55 gallon drum, Explosion vents Abrasive resistant inlet
FILTER	
Filter type	Synthetic fiber designed for maximum filter life
Options	Bag-In/Bag-Out collars for safe filter changes
FINISHES AND PROTECTIVE COATINGS	
Exterior/Interior	Manufacturer’s standard
ELECTRICAL DATA	
Volts/Phase/HZ	120/1/60
Enclosure	NEMA 7
CONTROLS	
Panel	Factor mounted and wired control panel
Operation	Continuous compressed air purge based on differential pressure signal from differential pressure gauge.
Options	Explosion-proof solenoids

Preferred vendor, but not limited to:
Manufacturer Donaldson Company, Inc.
Model No Torit Downflow II SDF-4 w/base legs for 55-gallon drum

Other Manufacturers
1. United Air Specialists “Dust Hog”

Equipment No. **TP-04-DC-0919** **Dust Collector (Dust Collection System #1)**

Process and Instrumentation Diagram **31001-P-028-01**

Process Media

Gasses	Air
Vapors	N/A
Solids	Fine dust (cement, sand) from size reduction operations
Temperature	75 °F
Pressure	- 10”w.g.

SCOPE

Unit description	Modular cartridge type dust collector with continuous compressed air purge, hopper with slide gate with a sealed connection to discharge drum. Unit shall be suitable for operation in a hazardous environment and for conveying hazardous materials. Unit shall be sized to minimize the amount of filter changes.
CAPACITY/THROUGHPUT	
Flow rate (DC-0919)	3,750 SCFM
UNIT PERFORMANCE	
Total housing pressure drop (loaded)	5-inches w.g.
Filter Efficiency	99.999% on particles >/= 0.5 micron.
Air-to-Cloth Ratio	1.5:1
Minimum Filter Area	2,500 sq. ft.
CONSTRUCTION	
HOUSING	
Type	Welded heavy gauge steel construction
Rating	+/-20 inches water
Seismic Zone	3
Options	Hose and drum cover for 55 gallon drum, Explosion vents Abrasive resistant inlet
FILTER	
Filter type	Synthetic fiber designed for maximum filter life
Options	Bag-In/Bag-Out collars for safe filter changes
FINISHES AND PROTECTIVE COATINGS	
Exterior	Manufacturer’s standard
Interior	Manufacturer’s standard
ELECTRICAL DATA	
Volts/Phase/HZ	120/1/60
Enclosure	NEMA 7
CONTROLS	
Panel	Factor mounted and wired control panel
Operation	Continuous compressed air purge based on differential pressure signal from photohelic pressure gauge.
Options	Explosion-proof solenoids

Preferred vendor, but not limited to:
Manufacturer Donaldson Company, Inc.
Model No Torit Downflow II DFT 4-32

Other Manufacturers
1. United Air Specialists “Dust Hog”

Equipment No. **ST-09-DC-0920** **Dust Collector (Dust Collection System #2)**
TP-04-DC-0919 **Dust Collector (Dust Collection System #1)**
Process and Instrumentation Diagram **31001-P-028-02A, 31001-P-028-01**

Process Media

Gasses	Air
Vapors	N/A
Solids	Fine dust (cement, sand) from solids mixing operations
Temperature	75 °F
Pressure	- 10”w.g.

SCOPE

Unit description	Modular cartridge type dust collector with continuous compressed air purge, hopper with slide gate with a sealed connection to discharge drum. Unit shall be suitable for operation in a hazardous environment and for conveying hazardous materials. Unit shall be sized to minimize the amount of filter changes.
CAPACITY/THROUGHPUT	
Flow rate	2,100 SCFM (DC-0920)
Flow rate	3,750 SCFM (DC-0919)
UNIT PERFORMANCE	
Total housing pressure drop (loaded)	5-inches w.g.
Filter Efficiency	99.999% on particles >/= 0.5 micron.
Air-to-Cloth Ratio	1.5:1
Minimum Filter Area	2,000 sq ft (Allows for excess capacity)
CONSTRUCTION	
HOUSING	
Type	Welded heavy gauge steel construction
Rating	+/-20 inches water
Seismic Zone	3
Options	Hose and drum cover for 55 gallon drum, Explosion vents Abrasive resistant inlet
FILTER	
Filter type	Synthetic fiber designed for maximum filter life
Options	Bag-In/Bag-Out collars for safe filter changes
FINISHES AND PROTECTIVE COATINGS	
Exterior	Manufacturer’s standard
Interior	Manufacturer’s standard
ELECTRICAL DATA	
Volts/Phase/HZ	120/1/60
Enclosure	NEMA 7
CONTROLS	
Panel	Factor mounted and wired control panel
Operation	Continuous compressed air purge based on differential pressure signal from photohelic pressure gauge.
Options	Explosion-proof solenoids

Preferred vendor, but not limited to:
Manufacturer Donaldson Company, Inc.
Model No Torit Downflow II DF2-8

Other Manufacturers
1. United Air Specialists “Dust Hog”

Equipment No. TT-03-DC-0937 Dust Collector (Air Filter)

Process and Instrumentation Diagram 31001-P-028-03B

Process Media

Gasses	Air
Vapors	N/A
Solids	Fine dust (cement, sand) from solids mixing operations
Temperature	75 °F
Pressure	- 10”w.g.

SCOPE

Unit description	Pre-filter housing, standard capacity pleated filter. MERV-7 efficiency. Unit shall be suitable for operation in a hazardous environment and for conveying hazardous materials. Unit shall be sized to minimize the amount of filter changes

CAPACITY/THROUGHPUT

Flow rate	500 FPM

UNIT PERFORMANCE

Total housing pressure drop (loaded)	0.72-inches w.g.
Filter Efficiency	50-70% on particles 3-10 microns.
Air-to-Cloth Ratio	N/A
Minimum Filter Area	8.2 sq ft

CONSTRUCTION

HOUSING

Type	Welded heavy gauge steel construction
Rating	+/-20 inches water
Options	

FILTER

Filter type	Synthetic fiber designed for maximum filter life
Options	Higher rated MERV filters

FINISHES AND PROTECTIVE COATINGS

Exterior	Manufacturer’s standard
Interior	Manufacturer’s standard

ELECTRICAL DATA N/A

CONTROLS N/A

Preferred vendor, but not limited to:
Manufacturer Air Handler
Model No MERV-7 or greater

Other Manufacturers: N/A