Copy
Review & Recycle

2014-LTR-1014

Attachment 17

[Permit Attachment RR]

Construction Drawings

PROCESS FLOW DIAGRAM

DRAWING NO.	DRAWING TITLE
31001-P-001-01	~~ATC MWF OVERALL BLOCK DIAGRAM~~ MWF LINE 100, 200, 300, 400, 500 OVERALL BLOCK DIAGRAM
31001-P-001-02	~~ATC MWF-OVERALL PROCESS FLOW DIAGRAM~~ MWF OVERALL PROCESS FLOW DIAGRAM WASTE TREATMENT
31001-P-001-03	FUNCTIONAL FLOW DESCRIPTION-LINE 100
31001-P-001-04	~~FUNCTIONAL FLOW DESCRIPTION-LINE 200~~ FUNCTIONAL FLOW DESCRIPTION-LINE 200 LIQUIDS/SLUDGE
31001-P-001-05	~~FUNCTIONAL FLOW DESCRIPTION-LINE 300~~ FUNCTIONAL FLOW DESCRIPTION-LINE 300 METAL/LEAD DEBRIS
31001-P-001-06	~~FUNCTIONAL FLOW DESCRIPTION-LINE 400~~ FUNCTIONAL FLOW DESCRIPTION-LINE 400 HETEROGENEOUS SOLIDS/DEBRIS
31001-P-001-07	~~FUNCTIONAL FLOW DESCRIPTION-LINE 500 (GASVIT)~~ FUNCTIONAL FLOW DESCRIPTION-LINE 500 ORGANIC LIQUIDS/SOLIDS (MWTH)
31001-P-002	~~SOILS/INORGANIC DEBRIS~~ PROCESS FLOW DIAGRAM SOILS/INORGANIC DEBRIS
31001-P-003	TREATMENT LINE 100-SOILS/INORGANIC DEBRIS
31001-P-004	~~TREATMENT LINE 200-INORGANIC LIQUID/SLUDGE~~ PROCESS FLOW DIAGRAM LINE 200-SOILS/INORGANIC DEBRIS
31001-P-005	~~TREATMENT LINE 300 METAL/LEAD~~ PROCESS FLOW DIAGRAM LINE 300 METALS/LEAD
31001-P-006	~~TREATMENT LINE 400-HETEROGENEOUS SOLIDS DEBRIS~~ PROCESS FLOW DIAGRAM LINE 400 HETEROGENEOUS SOLIDS DEBRIS
31001-P-050	~~FEED PREPARATION AND FEED SUBSYSTEM~~ PROCESS FLOW DIAGRAM EVAPORATION SYSTEM TP-16

DRAWING NO.	DRAWING TITLE
* ~~31001-P-051~~	~~PROCESS CHAMBER & 1ST STAGE SYNGAS~~
* ~~31001-P-052-01~~	~~SYNGAS TREATMENT (2ND STAGE)~~
~~31001-P-052-02~~	~~SYNGAS TREATMENT (3RD. STAGE/BOILER)~~
31001-P-053	~~GASVIT PROCESS VENT SYSTEM~~ MWTH PROCESS FLOW DIAGRAM VENT SYSTEM (GV-09)
~~31001-P-054~~	~~SECONDARY WASTE TREATMENT~~
31001-P-055	~~SERVICE/INSTRUMENT AIR~~ PROCESS FLOW DIAGRAM SERVICE/INSTRUMENT AIR GV-13
31001-P-056	~~NITROGEN SUPPLY~~ PROCESS FLOW DIAGRAM NITROGEN SUPPLY (GV-15)
~~31001-P-057~~	~~STEAM SUPPLY~~
31001-P-058-01	~~PROCESS WATER SUPPLY~~ PROCESS FLOW DIAGRAM PROCESS WATER SUPPLY (GV-16)
31001-P-058-02	~~R.O. WATER SUPPLY~~ PROCESS FLOW DIAGRAM R.O. WATER SUPPLY GV-17
31001-P-058-03	~~PROCESS COOLING WATER~~ PROCESS FLOW DIAGRAM PROCESS COOLING WATER (GV-19)
31001-P-058-04	~~CHILLED WATER~~ PROCESS FLOW DIAGRAM CHILLED WATER GV-20
31001-P-059-01	~~BUILDING CONFINEMET (SUPPLY)~~ PROCESS FLOW DIAGRAM MWTH CONFINEMENT (BLDG HVAC) (SUPPLY) GV-22
31001-P-059-02	~~BUILDING CONFINEMENT (EXHAUST)~~ PROCESS FLOW DIAGRAM MWTH CONFINEMENT (BLDG HVAC) GV-22 (EXHAUST)

PIPING AND INSTRUMENTATION

DRAWING NO.	DRAWING TITLE
31001-P-010-01	~~PIPING AND INSTRUMENTATION DIAGRAM-LEGEND~~ PIPING AND INSTRUMENTATION DIAGRAM-LEGEND
31001-P-010-02	PIPING AND INSTRUMENTATION DIAGRAM-LEGEND
31001-P-010-03	PIPING AND INSTRUMENTATION DIAGRAM-LEGEND
31001-P-011	NOT USED
31001-P-012	NOT USED
31001-P-013	SIZE REDUCTION/SCREENING SYSTEM
31001-P-014	CUTTING & SHEARING SYSTEM
31001-P-015	~~SORTING SYSTEM~~ PIPING AND INSTRUMENTATION DIAGRAM SORTING SYSTEM (TP-03)
31001-P-016	~~LIQUID TREATMENT SYSTEM~~ PIPING AND INSTRUMENTATION DIAGRAM-LIQUID TREATMENT SYSTEM (TP-04)
31001-P-017	NOT USED
31001-P-018	~~LIQUID HOLDING SYSTEM~~ PIPING AND INSTRUMENTATION DIAGRAM LIQUID HOLDING SYSTEM (TP-06)
31001-P-019	~~COMPACTION/MACRO ENCAPSULATION SYSTEM~~ PIPING AND INSTRUMENTATION DIAGRAM-COMPACTION/MACRO-ENCAPSULATION SYSTEM (TP-07)
31001-P-020	DRYER SYSTEM
31001-P-021	LIQUID CONSOLIDATION SYSTEM
31001-P-022	HIGH CAPACITY SOLIDS MIXING SYSTEM
31001-P-023	LOW CAPACITY SOLIDS MIXING SYSTEM
31001-P-024	~~IN-CONTAINER MIXING SYSTEM~~ PIPING AND INSTRUMENTATION DIAGRAM IN-CONTAINER MIXING SYSTEM (TT-03)
31001-P-025	~~POLYMER MIXING SYSTEM~~ PIPING AND INSTRUMENTATION DIAGRAM-POLYMER MIXING SYSTEM (TT-04)
31001-P-026	~~PHYSICAL EXTRACTION (DECON) SYSTEM~~ PIPING AND INSTRUMENTATION DIAGRAM-PHYSICAL EXTRACTION (DECON) SYSTEM (TT-05)
31001-P-027	~~CONTAINER RINSE SYSTEM~~ PIPING AND INSTRUMENTATION DIAGRAM-CONTAINER RINSE SYSTEM (TT-06)
31001-P-028-01	~~STABILIZATION PROCESS VENT DUST CONTROL SYSTEM #1~~ PIPING AND INSTRUMENTATION DIAGRAM-STABILIZATION PROCESS VENT-(DUST CONTROL SYSTEM #1)
31001-P-028-02	~~STABILIZATION PROCESS VENT-DUST CONTROL SYSTEM #2~~ PIPING AND INSTRUMENTATION DIAGRAM-STABILIZATION PROCESS VENT-(DUST CONTROL SYSTEM #2)
31001-P-028-03A	STABILIZATION PROCESS VENT-FUME EXHAUST SYSTEM #1
31001-P-028-03B	STABILIZATION PROCESS VENT-FUME EXHAUST SYSTEM #2
31001-P-029-01	STABILIZATION BUILDING CONFINEMENT (SUPPLY)
31001-P-029-02	~~STABILIZATION BUILDING CONFINEMENT (EXHAUST)~~ PIPING AND INSTRUMENTATION DIAGRAM-CONFINEMENT SYSTEM (EXHAUST) (SB-02)
31001-P-030	STABILIZATION BUILDING EXHAUST MONITORING
31001-P-031	~~BULK REAGENT STORAGE~~ PIPING AND INSTRUMENTATION DIAGRAM-BULK REAGENT DISPENSING (SB-01)
31001-P-070-01	~~LEGEND~~ STANDARD LEGEND SHEET 1
31001-P-070-02	~~LEGEND~~ STANDARD LEGEND SHEET 2
31001-P-070-03	~~LEGEND~~ STANDARD LEGEND SHEET 3
31001-P-071-01	~~FEED PREP~~ P&ID EVAPORATOR SYSTEM TP-16
31001-P-071-02	~~FEED PREP (WEIGHING STATION)~~ P&ID EVAPORATOR SYSTEM TP-16
31001-P-071-03	P&ID EVAPORATOR SYSTEM TP-16
~~31001-P-072-01~~	~~WASTE FEED (LIQUID)~~
~~31001-P-072-02~~	~~WASTE FEED (CONTINUOUS SOLIDS)~~
~~*31001-P-072-03~~	~~WASTE FEED (BATCH FEEDER #1)~~
~~*31001-P-072-04~~	~~WASTE FEED (BATCH FEEDER #2)~~

DRAWING NO.	DRAWING TITLE
~~*31001-P-073-01~~	~~PROCESS CHAMBER (CHAMBER SENSORS)~~
~~*31001-P-073-02~~	~~PROCESS CHAMBER (PLASMA POWER)~~
~~*31001-P-073-02.1~~	~~PROCESS CHAMBER (PLASMA POWER)~~
~~*31001-P-073-03~~	~~PROCESS CHAMBER (PROCESS COOLING WATER)~~
~~*31001-P-073-04~~	~~PROCESS CHAMBER (PROCESS COOLING WATER)~~
~~*31001-P-073-05~~	~~PROCESS CHAMBER (PROCESS OFF GAS)~~
~~*31001-P-073-06~~	~~PROCESS CHAMBER (METALS DRAIN HEATER)~~
~~*31001-P-073-07~~	~~PROCESS CHAMBER (ELECTRODES OVERFLOW HTR)~~
~~*31001-P-073-08~~	~~PROCESS CHAMBER (NITROGEN PURGE)~~
~~*31001-P-073-09~~	~~PROCESS CHAMBER (PROCESS STEAM)~~
~~*31001-P-074-01~~	~~PRODUCT HANDLING (VITRIFIED)~~
~~*31001-P-074-02~~	~~PRODUCT HANDLING (METALS)~~
~~*31001-P-075~~	~~1ST STAGE SYNGAS PROCESS FILTER~~
~~*31001-P-076-01~~	~~2ND STAGE SYNGAS PROCESSING (1ST SCRUBBER)~~
~~*31001-P-076-02~~	~~2ND STAGE SYNGAS PROCESSING (2ND SCRUBBER)~~
~~*31001-P-076-03~~	~~2ND STAGE SYNGAS PROCESSING (HEME)~~
~~*31001-P-076-04~~	~~2ND STAGE SYNGAS PROCESSING (HEPA'S)~~
~~31001-P-077-01~~	~~3RD STAGE SYNGAS CONVERTER~~
~~31001-P-077-02~~	~~3RD STAGE SYNGAS HEAT RECOVERY/BOILER~~
~~31001-P-078~~	~~SYNGAS GAS SAMPLING~~
~~31001-P-079-01~~	~~GASVIT PROCESS VENT SYSTEM~~
31001-P-079-02	MWTH PROCESS VENT SYSTEM (GV-09)
~~31001-P-080-01~~	~~GASVIT SYSTEM MAIN CONTROLS (FEED CONTROL SYSTEM)~~
~~31001-P-080-02~~	~~GASVIT SYSTEM MAIN CONTROLS (AWFCO SYSTEM)~~
~~31001-P-081~~	~~SECONDARY WASTE TREATMENT~~
~~31001-P-082~~	~~CAUSTIC ADDITION~~
31001-P-083-01	~~SERVICE / INSTRUMENT AIR (SUPPLY)~~ P&ID SERVICE/INSTRUMENT AIR GV-13
31001-P-083-02	~~SERVICE / INSTRUMENT AIR (DISTRIBUTION)~~ P&ID SERVICE/INSTRUMENT AIR GV-13
31001-P-085	~~NITROGEN SUPPLY~~ P&ID NITROGEN SUPPLY GV-15
31001-P-086	~~PROCESS WATER SUPPLY~~ P&ID PROCESS WATER SUPPLY GV-16
31001-P-087	~~REVERSE OSMOSIS, (R.O.), WATER SUPPLY~~ P&ID R.O. WATER SUPPLY GV-17
~~31001-P-088-01~~	~~STEAM (BACKUP BOILER)~~
~~31001-P-088-02~~	~~STEAM (DISTRIBUTION)~~
31001-P-089	~~PROCESS COOLING WATER SUPPLY~~ P&ID PROCESS COOLING WATER (90° F) DISTRUBUTION (GV-19)
31001-P-090	~~CHILLED WATER SUPPLY~~ P&ID CHILLED WATER SYSTEM 1 (25° F) (GV-20)
31001-P-092-01	~~BUILDING CONFINEMENT (SUPPLY)~~ P&ID MWTH CONFINEMENT SUPPLY AIR (GV-22)
31001-P-092-02	~~BUILDING CONFINEMENT (EXHAUST)~~ P&ID MWTH CONFINEMENT (EXHAUST) GV-22
31001-P-095	~~BUILDING EXHAUST MONITORING~~ P&ID BLDG EXHAUST MONITORING (GV-25)

ELECTRICAL

DRAWING NO.	DRAWING TITLE
31001-E-001-01	~~ELECTRICAL ONE-LINE SCHEMATIC (GV-23)~~ ELECTRICAL ONE-LINE SCHEMATIC (GV-23)
31001-E-001-02	~~ELECTRICAL ONE-LINE SCHEMATIC (GV-23)~~ ELECTRICAL ONE-LINE SCHEMATIC (GV-23)
31001-E-001-03	~~ELECTRICAL ONE-LINE SCHEMATIC~~ ELECTRICAL ONE-LINE SCHEMATIC UTILITY BUILDING
31001-E-001-04	ELECTRICAL ONE-LINE SCHEMATIC
31001-E-002-01	~~ELECTRICAL MCC SCHEDULES~~ ELECTRICAL MCC SCHEDULES (GV-23)
31001-E-002-02	ELECTRICAL MCC SCHEDULES SB-03
31001-E-003	~~OVERALL ELECTRICAL LAYOUT~~ OVERALL LAYOUT
31001-E-004-01	~~ELECTRICAL FIRE PROTECTION 1ST FLOOR~~ ELECTRICAL FIRE PROTECTION 1ST FLOOR
31001-E-004-02	~~ELECTRICAL FIRE PROTECTION 2ND FLOOR~~ ELECTRICAL FIRE PROTECTION 2ND FLOOR

~~*PROCESS FLOW DIAGRAMS (PFDS) AND PIPING AND INSTRUMENTATION DIAGRAMS (PIDS) FOR GASVIT SYSTEMS GV-03, GV-04, GV-05, AND GV-06 ARE ENCLOSED WITH ATTACHMENT 6 IN VOLUME V.~~

Copy Review & Recycle

REV	DATE	BY	QA	DATE	DESCRIPTION
1	7/17/14				PERMIT MODIFICATION REQUEST 135
0	2/18/98				ISSUE FOR TSCA/RCRA PERMIT APPLICATION

REVISION

PermaFix® environmental services

DATE	2/11/98
DRAWN	MKB
CHECKED	
DFTG APVD	
ENGR	
APVD	
OTHER	
QA	
APVD FOR IMPLEMENTATION BY:	

MIXED WASTE FACILITY BUILDING 13

DRAWING NUMBER/ TITLE INDEX

SCALE: AS SHOWN

SHEET NO 1 OF 2

INDEX

REV 1

ARCHITECTURAL

DRAWING NO.	SHEET NO.	DRAWING TITLE
31001-A-000	A001	~~KEY PLAN~~ ARCHITECTURAL KEY PLAN
31001-A-000	A002	DETAIL
31001-A-001	A101	STB-FLOOR PLAN
31001-A-001	A102	STB-FLOOR PLAN
31001-A-001	A103	~~CVB FLOOR PLAN~~ ARCHITECTURAL FLOOR PLAN MWTH
31001-A-001	A104	~~CVB FLOOR PLAN~~ ARCHITECTURAL FLOOR PLAN MWTH
31001-A-001	A105	STB-ELEVATION AT GRID LINE A
31001-A-001	A106	STB-ELEVATION AT GRID LINE E
31001-A-001	A107	STB-ELEVATION AT GRID LINE 1
31001-A-001	A108	STB-ELEVATION AT GRID LINE 7
31001-A-001	A109	~~CVB-ELEVATION AT GRID LINE 7~~ ARCHITECTURAL ELEVATION AT GRID LINE 7
31001-A-001	A110	~~CVB-ELEVATION AT GRID LINE 3~~ ARCHITECTURAL ELEVATION AT GRID LINE 3
31001-A-001	A111	~~STB., CVB.-ELEVATION AT GRID LINE 1 & P~~ ARCHITECTURAL ELEVATION AT GRID LINE 1 & P
31001-A-001	A112	STB-ELEVATION AT GRID LINE E/F
31001-A-001	A113	STB-ELEVATION AT GRID LINE H
31001-A-001	A114	~~CVB-ELEVATION AT GRID LINE H2~~ ARCHITECTURAL ELEVATION AT GRID LINE H7
31001-A-001	A115	~~CVB-ELEVATION AT GRID LINE M~~ ARCHITECTURAL ELEVATION AT GRID LINE M
31001-A-001	A116	~~CVB-ELEVATION AT GRID LINE 5.1~~ ARCHITECTURAL ELEVATION AT GRID LINE 5
~~31001-A-001~~	~~A131~~	~~CVB-SECOND FLOOR PLAN~~
31001-A-001	A141	STB., ~~CVB.~~-MWTH DOOR/WINDOW SCHEDULE
31001-A-001	A151	STB-REFLECT CEILING PLAN
31001-A-001	A152	STB-REFLECT CEILING PLAN
31001-A-001	A153	~~CVB-REFLECT CEILING PLAN~~ ARCHITECTURAL REFLECT CEILING
31001-A-001	A154	~~CVB-REFLECT CEILING PLAN~~ ARCHITECTURAL REFLECT CEILING
~~31001-A-001~~	~~A155~~	~~2ND FLOOR-REFLECT CEILING PLAN~~
31001-A-002	A201	WSB-FLOOR PLAN
31001-A-002	A202	WSB-FLOOR PLAN
31001-A-002	A203	WSB-ELEVATION AT GRID LINE Q & W
31001-A-002	A204	WSB-ELEVATION AT GRID LINE 8 & 12
31001-A-002	A251	WSB-REFLECT CEILING PLAN
31001-A-002	A252	WSB-REFLECT CEILING PLAN
31001-A-003	A301	ACB-FLOOR PLAN
31001-A-003	A302	ACB-ELEVATION AT GRID LINE 15
31001-A-003	A303	ACB-ELEVATION AT GRID LINE KK
31001-A-003	A304	ACB-ELEVATION AT GRID LINE 13
31001-A-003	A305	ACB-ELEVATION AT GRID LINE EE
31001-A-003	A306	ACB-REFLECT CEILING PLAN
31001-A-003	A307	ACB-SECTIONS
31001-A-003	A308	ACB-FIXTURE PLAN

STRUCTURAL

DRAWING NO.	SHEET NO.	DRAWING TITLE
31001-S-001	S101	~~NOTES~~ STRUCTURAL NOTES
31001-S-001	S102	NOTES
31001-S-002	S201	~~OVERALL BLDG. & EQUIP. FOUNDATION KEY PLAN~~ STRUCTURAL BLDG. & EQUIP. FOUNDATION KEY PLAN
31001-S-002	S202	STABL. BLDG.-FOUNDATION PLAN
31001-S-002	S203	STABL. (ANNEX) BLDG.-FOUNDATION PLAN
31001-S-002	S204	~~GASVIT BLDG.-FOUNDATION PLAN~~ STRUCTURAL FOUNDATION PLAN
31001-S-002	S205	~~UTILITY BLDG.-FOUNDATION PLAN~~ STRUCTURAL FOUNDATION PLAN
31001-S-002	S206	STOR. BLDG. (NORTH)-FOUNDATION PLAN
31001-S-002	S207	STOR. BLDG. (SOUTH)-FOUNDATION PLAN
31001-S-002	S208	STB EQUIPMENT LOCATION PLAN
31001-S-002	S209	STB (ANNEX)-EQUIPMENT LOCATION PLAN
31001-S-002	S210	~~GASVIT -EQUIPMENT LOCATION PLAN~~ STRUCTURAL EQUIPMENT LOCATION PLAN
31001-S-002	S211	STOR (NORTH)-EQUIPMENT LOCATION PLAN
31001-S-002	S212	STOR (SOUTH)-EQUIPMENT LOCATION PLAN
31001-S-002	S213	~~UTILITY BLDG.-EQUIPMENT LOCATION PLAN~~ STRUCTURAL EQUIPMENT LOCATION PLAN
31001-S-002	S214	ACCESS BLDG.-FOUNDATION PLAN
31001-S-003	S301	~~OVERALL SECONDARY CONTAINMENT KEY PLAN~~ STRUCTURAL SECONDARY CONTAINMENT KEY PLAN
31001-S-003	S302	STABL. BLDG.-SECONDARY CONTAINMENT
31001-S-003	S303	STB. (ANNEX)-SECONDARY CONTAINMENT
31001-S-003	S304	~~GASVIT BLDG.-SECONDARY CONTAINMENT~~ STRUCTURAL SECONDARY CONTAINMENT
31001-S-003	S305	~~UTILITY BLDG.-SECONDARY CONTAINMENT~~ STRUCTURAL SECONDARY CONTAINMENT
31001-S-003	S306	STOR BLDG. (N)-SECONDARY CONTAINMENT
31001-S-003	S307	STOR BLDG. (S)-SECONDARY CONTAINMENT
31001-S-003	S308	STB (ANNEX)-SECONDARY CONTAINMENT
~~31001-S-003~~	~~S309~~	~~GASVIT (PCB)-SECONDARY CONTAINMENT~~
31001-S-003	S310	STB (PAN)-SECONDARY CONTAINMENT
31001-S-003	S311	~~GASVIT (PAN)-SECONDARY CONTAINMENT~~ STB (PAN)-SECONDARY CONTAINMENT
31001-S-003	S312	PAN DETAILS-SECONDARY CONTAINMENT
31001-S-004	S401	BUILDING FOUNDATION DETAILS
31001-S-004	S402	CONSTRUCTION JOINTS DETAILS
31001-S-004	S403	REBAR & EQUIPMENT FOUNDATION DETAILS
31001-S-004	S404	EQUIPMENT FOUNDATION DETAILS
31001-S-004	S405	BUILDING FOUNDATION SCHEDULE
31001-S-004	S406	~~EQUIPMENT FOUNDATION SCHEDULE~~ MIXED WASTE FACILITY (STB & WSB) STRUCTURAL EQUIPMENT FOUNDATION SCHEDULE
31001-S-004	S407	EQUIPMENT FOUNDATION SCHEDULE
31001-S-004	S408	BLDG. FOUNDATION DETAILS
31001-S-005	S501	STB.-SECTIONS & DETAILS
31001-S-005	S502	STB.-SECTIONS & DETAILS
31001-S-005	S503	STB.-SECTIONS & DETAILS
31001-S-005	S504	~~STB., CVB.~~- MWF SECTIONS & DETAILS
31001-S-005	S505	WSB.-SECTIONS & DETAILS
31001-S-005	S506	ACCESS BLDG.-SECTIONS & DETAILS
31001-S-005	S507	CURB-SECTIONS & DETAILS
31001-S-006	S601	~~CONTROL ROOM-PLAN~~ STRUCTURAL CONTROL ROOM PLAN VIEW
31001-S-006	S602	CONTROL ROOM-PLAN & DETAILS
~~31001-S-006~~	~~S603~~	~~CONTROL ROOM-FRAMING DETAILS~~
~~31001-S-006~~	~~S604~~	~~CONTROL ROOM-FRAMING DETAILS~~
31001-S-006	S605	STAIR CONNECTION DETAILS
31001-S-006	S606	STB.-STAIR DETAILS
31001-S-006	S607	~~CVB.-STAIR DETAILS~~ STRUCTURAL STAIR DETAIL
31001-S-006	S608	MISC. CONNECTION & DETAILS
31001-S-007	S701	BEAM/COLUMN CONNECTION

ROBERT JOHN SCHREIBER
STATE OF WASHINGTON
36740
REGISTERED
PROFESSIONAL ENGINEER

CIVIL

DRAWING NO.	SHEET NO.	DRAWING TITLE
31001-C-001	C001	LOCATION & SITE PLAN (NOTES)
31001-C-002	C101	~~TOPOGRAPHY (SITE AREA)~~ CIVIL TOPOGRAPHY (SITE AREA)
31001-C-003	C201	RESIDENTIAL & COMMERCIAL ZONING
31001-C-004	C301	~~GRADING AND DRAINAGE PLAN~~ CIVIL GRADING AND DRAINAGE PLAN
31001-C-004	C302	~~DRAINAGE DETAILS~~ DRAINAGE DETAILS
31001-C-005	C401	~~ROOF DRAINAGE (STABL. GASVIT BLDGS.)~~ CIVIL ROOF DRAINAGE BUILDING 13
31001-C-005	C402	~~ROOF DRAINAGE (WSB)~~ CIVIL ROOF DRAINAGE SECTIONS
31001-C-005	C403	~~ROOF DRAINAGE (ACB)~~ CIVIL ROOF DRAINAGE SECTIONS
31001-C-006	C501	~~TRAFFIC PATTERN~~ CIVIL TRAFFIC PATTERN

MECHANICAL

DRAWING NO.	SHEET NO.	DRAWING TITLE
31001-M-100	~~M001~~ 1	~~OVERALL LAYOUT~~ MIXED WASTE FACILITY ROOM GENERAL ARRANGEMENT
31001-M-100	~~M002~~ 2	~~STB & GVB LAYOUT~~ MWNT & MWTH EQUIPMENT GENERAL ARRANGEMENT
31001-M-100	M003	STB LAYOUT
31001-M-100	~~M004~~ 4	~~GVB LAYOUT~~ MIXED WASTE THERMAL (MWTH) EQUIPMENT GENERAL ARRANGEMENT
31001-M-100	M005	WSB LAYOUT

Copy
Review & Recycle

REV	DATE	BY	QA	DATE	DESCRIPTION
1	7/22/14				PERMIT MODIFICATION REQUEST 135
0	2/18/98				ISSUE FOR TSCA/RCRA PERMIT APPLICATION

Perma-Fix® environmental services

DATE	2/11/98
DRAWN	MKB
CHECKED	
DFTG APVD	
ENGR	
APVD	
OTHER	
QA	
APPVD FOR IMPLEMENTATION BY	

MIXED WASTE FACILITY
BUILDING 13

DRAWING NUMBER/
TITLE INDEX

SCALE: AS SHOWN

SHEET NO. 2 OF 2

INDEX

REV

Copy
Review & Recycle

ATT-2, PERMAFIX NW RICHLAND MIXED WASTE FACILITY BLOCK DIAGRAM

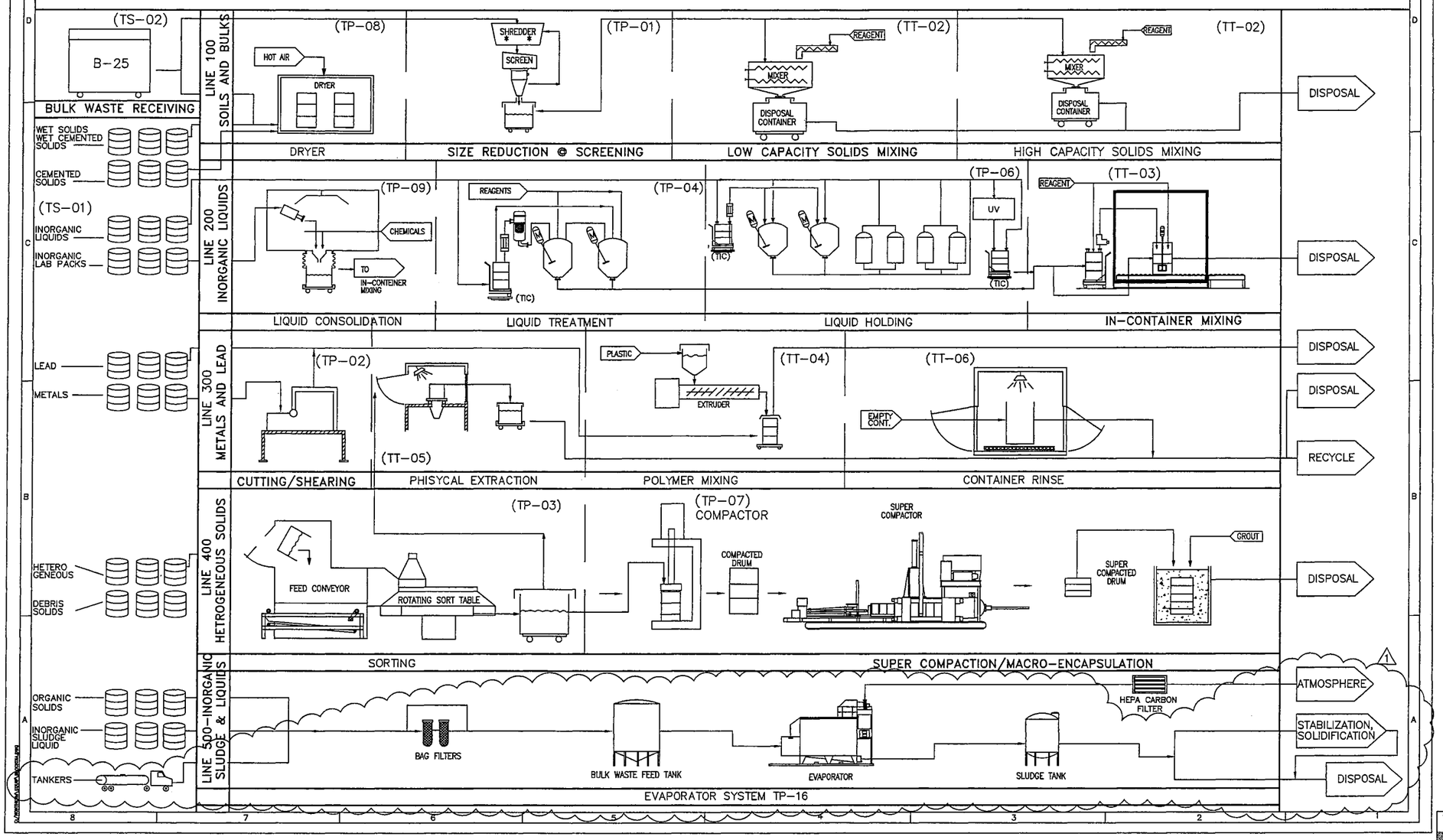

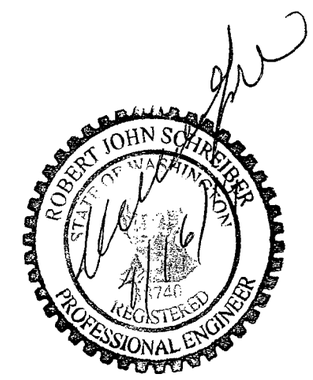

PermaFix®
environmental services
A Nuclear Services and Waste Management Company

REV	DATE	BY	QA	DATE	DESCRIPTION
1	7/14/14	SDN			PERMIT MODIFICATION REQUEST 135
0	2/16/98				ISSUE FOR TSCA/RCRA PERMIT APPL.

REVISION

DATE	
DRAWN	
CHECKED	
DFTG APVD	
ENGR	
APVD	
OTHER	
QA	
APPVD FOR IMPLEMENTATION BY	
FOR DATE	

MIXED WASTE FACILITY
BUILDING 13

LINE 100, 200,
300, 400, 500
OVERALL BLOCK DIAGRAM

SCALE: NONE | SHEET NO. 1

31001-P-001-01 | REV 1

Copy
Review & Recycle

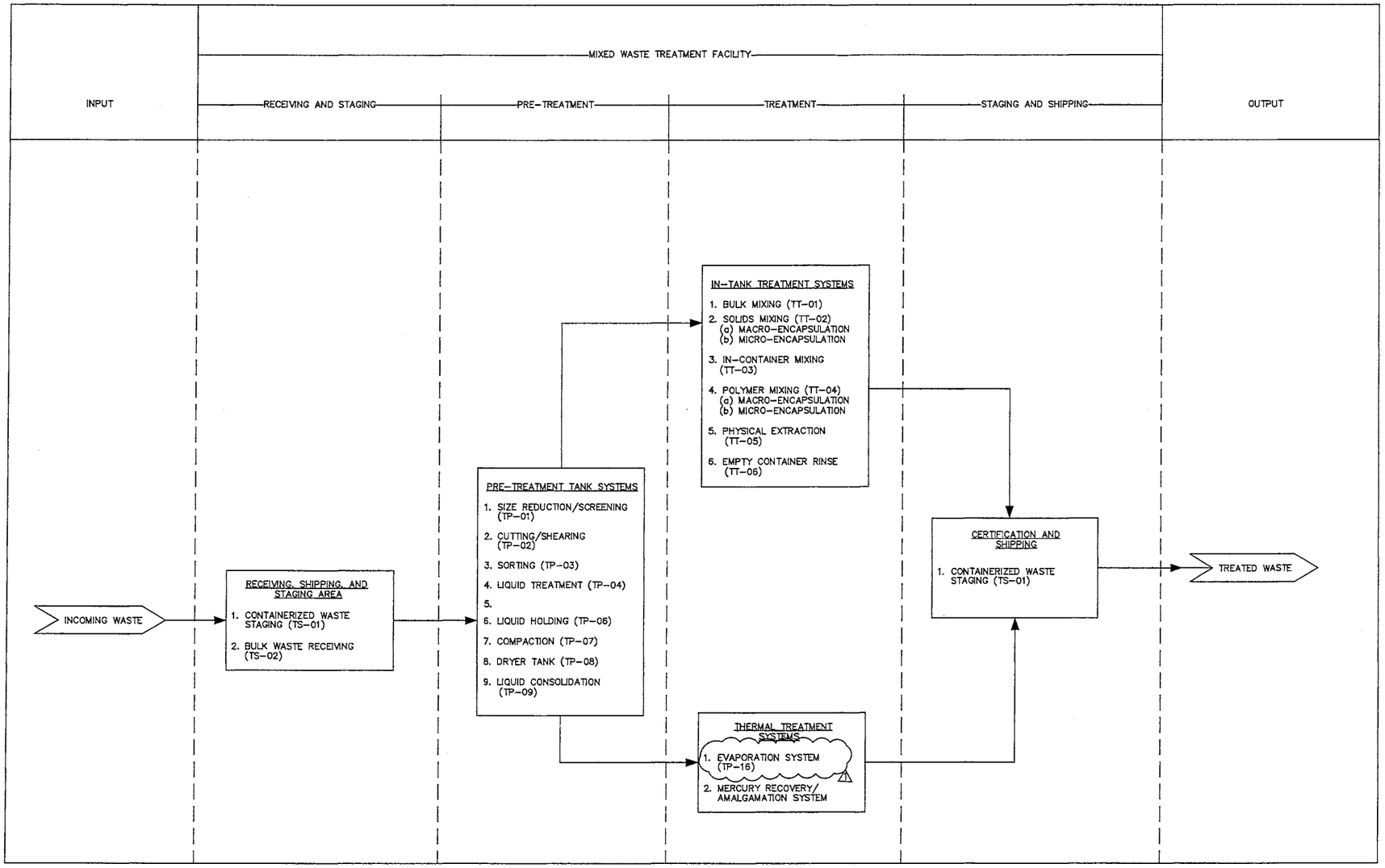

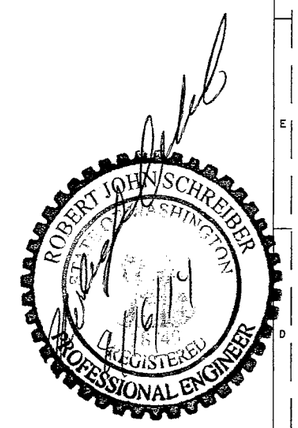

PermaFix®
environmental services
A Nuclear Services and Waste Management Company

DATE	
DRAWN	
CHECKED	
DFTG APVD	
ENGR	
APVD	
OTHER	
QA	
APPVD FOR IMPLEMENTATION BY	
FOR	DATE

MIXED WASTE FACILITY
STABILIZATION BUILDING 13
(MWNT) & (MWTH)

OVERALL PROCESS
FLOW DIAGRAM
WASTE TREATMENT

SCALE: NONE | SHEET NO. 2
DWG NO 31001-P-001-02 | REV 1

REV	DATE	BY	QA	DATE	DESCRIPTION
1	3/30/14				PERMIT MODIFICATION REQUEST 135
0	2/16/98				ISSUE FOR TSCA/RCRA PERMIT APPLICATION

REVISION

Copy
Review & Recycle

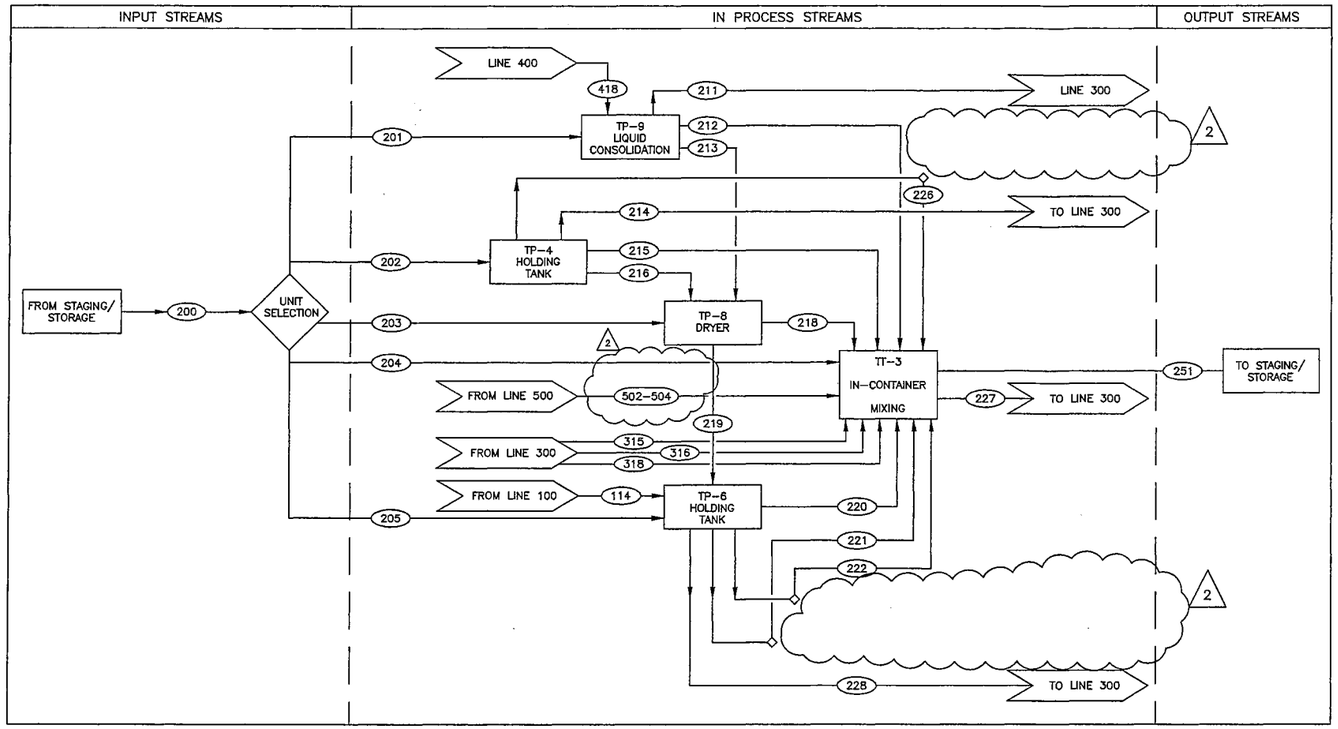

STREAM NO.	STREAM DESCRIPTION	STREAM RESTRICTIONS
	LINE 200 INPUT STREAMS	
211*	Empty[1] cantoiners requiring cleaning or triple rinse.	No TSCA regulated PCBs or waste designated as W001 as defined by WAC 173-303-9904.
212	Consolidated and chemically treated liquids requiring stabilization.	Carries the same waste code(s) designated to the input stream.
213	Consolidated and chemically treated liquids requiring concentration.	Carries the same waste code(s) designated to the input stream.
214*	Empty[1] containers requiring cleaning or triple rinse.	Carries the same waste code(s) designated to the input stream.
215	Chemically treated bulk liquids requiring stabilization.	Carries the same waste code(s) designated to the input stream.
216	Chemically treated bulk liquids requiring concentration.	Carries the same waste code(s) designated to the input stream.
217	RESERVED	
218	Concentrated waste requiring stabilization.	Same as Line 203.

STREAM NO.	STREAM DESCRIPTION	STREAM RESTRICTIONS
219	Distillate liquids generated fram concentrating the incoming liquid waste.	Carries the same waste code(s) designated to the input stream.
220	Treated liquids requiring stabilization.	No TSCA regulated PCBs or waste designated as W001 as defined by WAC 173-303-9904.
221	Spent IX resins requiring stabilization.	Carries the same waste code(s) designated to the input stream.
222	Spent carbon requiring stabilization.	Carries the same waste code(s) designated to the input stream.
226	Spent filter element/sludge requiring stabilization.	Carries the same waste code(s) designated to the input stream.
227*	Empty[1] containers requiring cleaning or triple rinse.	Carries the same waste code(s) designated to the input stream.
228*	Empty[1] containers requiring cleaning or triple rinse.	Carries the same waste code(s) designated to the input stream.
229-250	RESERVED	
	LINE 200 INPUT STREAMS	
251	Waste stabilization with cementaceous reagent which complies with LDR requirements either via the treatment technology standard (STABL) or the appropriate concentration treatment standards.	For final and waste codes designations refer to streams 251A and 251B below.
251A	Stabilized Toxic Characteristic Waste.	With LDR treatment certification, this stream exits subtitle C and can be disposed at a LLW disposal facility.
251B	Stabilized Listed Waste.	With LDR treatment certification, this stream can be disposed at a subtitle C mixed waste disposal facility.

STREAM NO.	STREAM DESCRIPTION	STREAM RESTRICTIONS
	LINE 200 INPUT STREAMS	
200	Liquids and/or sludge with less than 5% suspended solids requiring chemical treatment prior to stabilization.	No TSCA regulated PCBs or waste designated as W001 as defined by WAC 173-303-9904.
201	Liquid waste shipped to the facility in small containers (<5 gal) that must be consolidated, chemically treated and/or stabilized. If the facility receives several small containers that are chemically compatible, they will be consolidated into a single drum. If the liquid waste is in such a small quantity that consolidation is nat required (see stream 201E), it will be chemically treated and stabilized in a container inside the consolidation enclosure. Stream designations for waste requiring chemical treatment before stabilization are 201A, B, C & D.	Same as Line 200.
201A	Liquid waste (<5 gal) requiring consolidation, neutralization (NEUTR) before stabilization (STABL).	Same as Line 200.
201B	Liquid waste (<5 gal) requiring consolidation, chemical oxidation (CHOXD) before stabilization (STABL).	Same as Line 200.
201C	Liquid waste (<5 gal) requiring consolidation, chemical reduction (CHRED) before stabilization (STABL).	Same as Line 200.
201D	Liquid waste (<5 gal) requiring consolidation, deactivation (DEACT) before stabilization (STABL).	Same as Line 200.
201E	Liquid waste (<5 gal) requiring consolidation, treatment and/or stabilization in a small container inside the cansolidation enclosure.	Same as Line 200.
202	Bulk liquid waste (>5 gal) requiring chemical treatment neutralization (NEUTR, CHOXD, CHRED,DEACT) before stabilization (STABL).	No TSCA regulated PCBs or waste designated as W001 as defined by WAC 173-303-9904. No High-Toc woste. No air/water reactive waste.
202A	Bulk liquid waste requiring neutralization (NEUTR) before stabilization (STABL).	Same as Line 202.
202B	Bulk liquid waste requiring chemical oxidation (CHOXD) before stabilization (STABL).	Same as Line 202.
202C	Bulk liquid waste requiring chemical reduction (CHRED) before stabilization (STABL).	Same as Line 202.
202D	Bulk liquid waste requiring deactivation (DEACT) before stabilization (STABL).	Same as Line 202.
203	liquid waste requiring concentration before stabilization.	No TSCA regulated PCBs or waste designated as W001 as defined by WAC 173-303-9904. No ignitable (D001) or corrosive (D002), or reactive (D003) wastes.
204	Liquid waste containers (>5 gal) requiring in-container neutralization and/or stabilization.	No TSCA regulated PCBs or waste designated as W001 as defined by WAC 173-303-9904. No High-Toc waste. No air/water reactive waste. No waste with >10% VOC.
205	Waste requiring uv, ix, or carbon filtration.	Same as Line 203.
206-210	RESERVED	

* 1 - "EMPTY" AS DEFINED BY WAC 173-303-160

ROBERT JOHN SCHLEIBER
STATE OF WASHINGTON
14417
REGISTERED
PROFESSIONAL ENGINEER

REV	DATE	BY	QA	DATE	DESCRIPTION
2	7/28/14	SDN			PERMIT MODIFICATION REQUEST 135
1	10/5/00	JA			REVISED PER DCA 31001-DCA-023
0	2/16/98	JM			ISSUE FOR TSCA/RCRA PERMIT APPLICATION

REVISION

PermaFix®
environmental services
A Nuclear Services and Waste Management Company

DATE	
DRAWN	
CHECKED	
DFTG APVD	
ENGR	
APVD	
OTHER	
QA	
APPVD FOR IMPLEMENTATION BY	
FOR DATE	

MIXED WASTE FACILITY
BUILDING 13

FUNCTIONAL FLOW
DESCRIPTION-LINE 200
LIQUIDS/SLUDGE

SCALE: NONE | SHEET NO. 4
DWG. NO. 31001-P-001-04 | REV 2

Copy
Review & Recycle

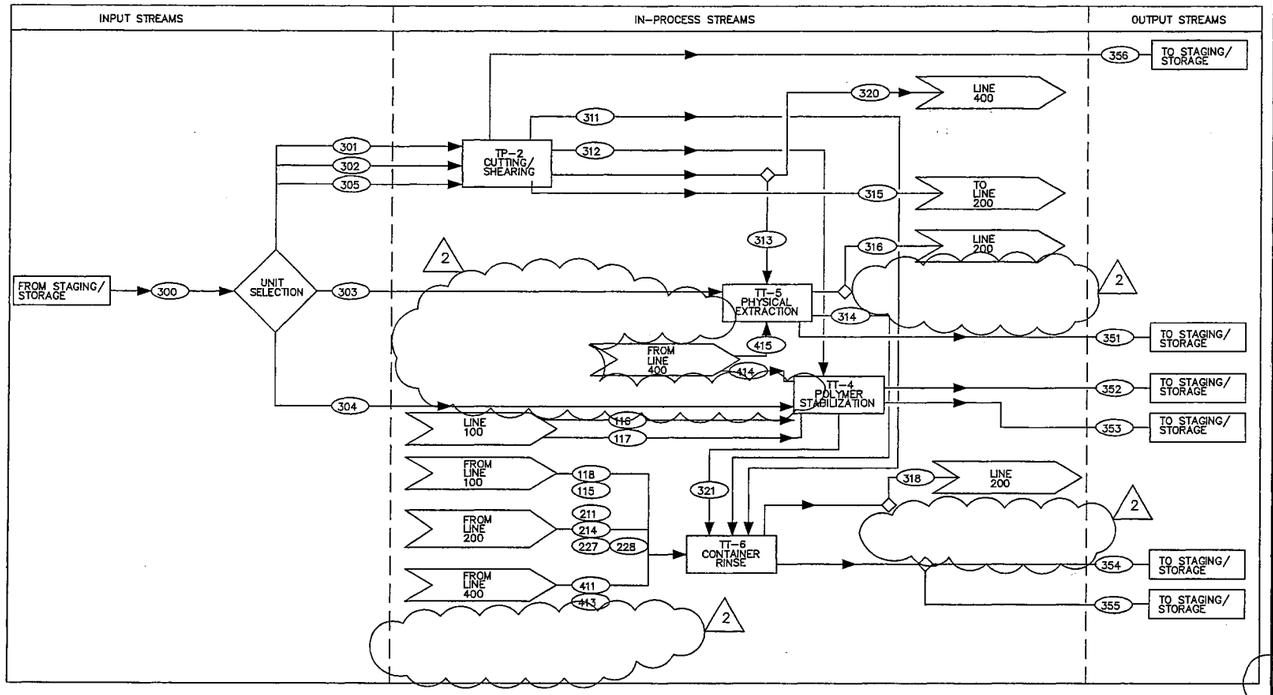

STREAM NO.	STREAM DESCRIPTION	STREAM RESTRICTIONS
	LINE 300 INPUT STREAMS	
300*	Bulk lead requiring macro-encapsulation (MACRO) and metal debris[1] requiring physical extraction.	No TSCA regulated PCBs or waste designated as W001 as defined by WAC 173-303-9904. No ignitable (D001), corrosive (D002), or reactive (D003) waste.
301	Metals requiring size reduction prior to physical extraction or macro-encapsulation.	Same as Line 300.
302	Lead requiring size reduction prior to macro-encapsulation.	Same as Line 300.
303*	Metal classified as "debris"[1] requiring physical extraction.	Same as line 300.
304	Bulk lead requiring macro-encapsulation.	Same as line 300.
305	Waste containing elemental Hg requiring amalgamation.	Same as line 300.
306-310	RESERVED	
	LINE 300 IN-PROCESS STREAMS	
311*	Empty[2] containers requiring cleaning or triple rinse.	Carries the same waste code(s) designated to the input waste stream.
312	Size reduced lead requiring immobilization.	Carries the same waste code(s) designated to the input waste stream.
313	Size reduced metals requiring physical extraction.	Carries the same waste code(s) designated to the input waste stream.
314*	Empty[2] container requiring cleaning or triple rinse.	Carries the same waste code(s) designated to the input waste stream.
315	Metal & lead shavings requiring stabilization.	Carries the same waste code(s) designated to the input waste stream.
316	Spent blasting media slurry and cartridge filters requiring stabilization.	Carries the same waste code(s) designated to the input waste stream.
318*	Empty[2] container rinse/cleaning residues requiring stabilization.	Carries the same waste code(s) designated to the input waste stream.
320	Size reduced metal not suitable for physical extraction.	Carries the same waste code(s) designated to the input waste stream.
321*	Empty[2] container requiring cleaning or triple rinse.	Carries the same waste code(s) designated to the input waste stream.
322-350	RESERVED	
	LINE 300 OUTPUT STREAMS	
351*	Debris[1] waste treated to meet LDR standards using physical extraction method.	For final disposition and waste codes designations refer to streams 351 A and B.
351A*	Debris[1] that displayed Toxic Characteristics and was treated using physical extraction.	With an LDR treatment certification, this stream exits subtitle C and can be disposed at an LLW disposal facility
351B*	Debris[1] that carried a listed waste code and was treated using physical extraction.	With an LDR treatment certification, this stream exits subtitle C and can be disposed at an LLW disposal facility

* 1 – "Debris" as defined by WAC 173-303-040
2 – "Empty" as defined by WAC 173-303-160

STREAM NO.	STREAM DESCRIPTION	STREAM RESTRICTIONS
	LINE 300 OUTPUT STREAMS	
352	Waste stabilization with polymer reagent which complies with LDR requirements either via the treatment technology standard (STABL) or the appropriate concentration treatment standards.	For final disposition and waste codes designations refer to streams 352 A and B.
352A	Stabilized Toxic Characteristic waste.	With an LDR treatment certification, this stream exits subtitle C and can be disposed at an LLW disposal facility
352B	Stabilized listed wastes.	With an LDR treatment certification, this stream can be disposed at a subtitle C mixed waste disposal facility.
353	Bulk lead macro-encapsulated to meet required treatment technology (MACRO).	With an LDR treatment certification, this stream can be disposed at a subtitle C mixed waste disposal facility.
354	Intact and reusable containers cleaned, or triple rinsed to meet clean container criteria.	With a cleaning certification, this container exits subtitle C control and can be reused, disposed at a LLW disposal facility, or free released through the LLW treatment facility.
355	Damaged and non-reusable containers cleaned, or triple rinsed to meet clean container criteria.	With a cleaning certification, this container exits subtitle C control and can be reused, disposed at a LLW disposal facility, or free released through the LLW treatment facility.
356	Amalgamated Hg waste	With an LDR treatment certification, this stream exits subtitle C and can be disposed at an LLW disposal facility

ROBERT OLIN SMITH NUMBER
STATE OF WASHINGTON
7/16/14
REGISTERED PROFESSIONAL ENGINEER

REV	DATE	BY	QA	DATE	DESCRIPTION
2	7/17/14				PERMIT MODIFICATION REQUEST 135
1	3/27/01				REVISED PER DCA 31001-DCA-0035
0	2/16/98				ISSUE FOR EPA PERMIT APPLICATION

REVISION

PermaFix® environmental services
A Nuclear Services and Waste Management Company

DATE	
DRAWN	
CHECKED	
DFTG APVD	
ENGR	
APVD	
OTHER	
QA	
APPVD FOR IMPLEMENTATION BY. FOR DATE	

MIXED WASTE FACILITY
BUILDING 13

FUNCTIONAL FLOW DESCRIPTION-LINE 300 METAL/LEAD DEBRIS

SCALE: NONE | SHEET NO. 5
DWG. NO. 31001-P-001-05 | REV 2

Copy
Review & Recycle

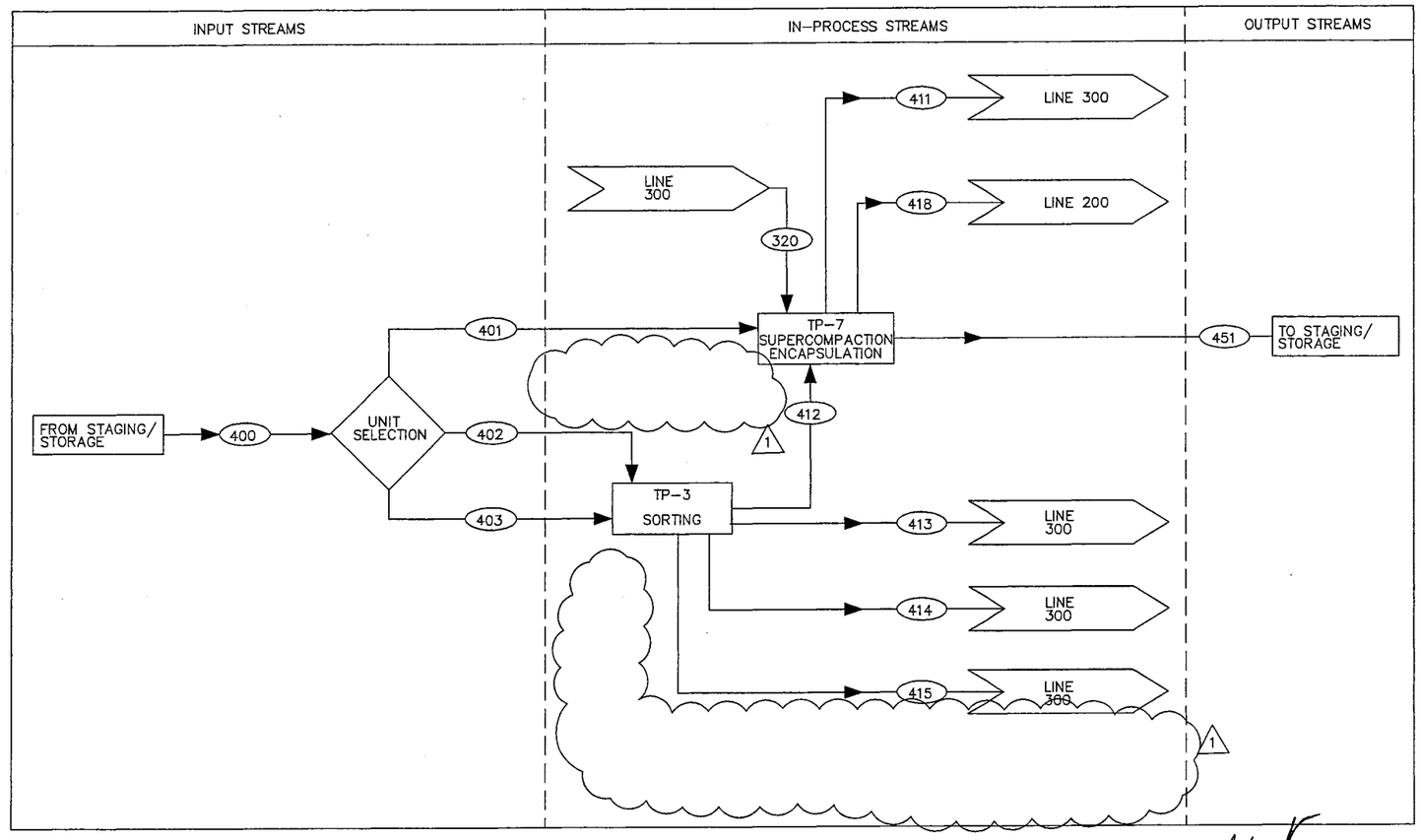

STREAM NO.	STREAM DESCRIPTION	STREAM RESTRICTIONS
	LINE 400 INPUT STREAMS	
400*	Heterogeneous solids requiring sorting and debris [1] requiring sorting and/or immobilization.	No TSCA regulated PCBs or waste designated as W001 as defined by WAC 173-303-9904. No ignitable (D001), corrosive (D002), or reactive (D003) waste.
401*	Debris[1] not requiring sorting.	Same as Line 400.
402	Hetrogeneous waste requiring sorting.	Same as Line 400.
403*	Debris[1] requiring sorting.	Same as line 400.
404-410	RESERVED	
	LINE 400 IN-PROCESS STREAMS	
411*	Empty[2] container requiring cleaning or triple rinse.	Carries the same waste code(s) designated ta the input waste stream.
412*	Sorted debris[1] requiring compaction and immobilization.	Carries the same waste code(s) designated to the input waste stream.
413*	Empty[2] containers requiring cleaning or triple rinse.	Carries the same waste code(s) designated to the input waste stream.
414	Sorted bulk lead requiring macro-encapsulation.	Carries the same waste code(s) designated to the input waste stream.
415	Sorted metals requiring physical extraction.	Carries the same waste code(s) designated to the input waste stream.
418	Collected liquids from compaction operations.	Carries the same waste code(s) designated to the input waste stream.
419-450	RESERVED	
	LINE 400 OUTPUT STREAMS	
451*	Debris[1] treated to meet LDR standards using immobilization.	For final dispositian and waste codes designations refer to streams 451A and 451B below
451A*	Debris[1] that displayed Toxic Characteristics and was treated using immobilization.	With an LDR treatment certification, this stream can be disposed at a subtitle C mixed waste disposal facility.
451B*	Debris[1] that carried a listed waste code(s) and was treated using immobilization.	With an LDR treatment certification, this stream can be disposed at a subtitle C mixed waste disposal facility.

* 1 – "Debris" as defined by WAC 173-303-040
2 – "Empty" as defined by WAC 173-303-160

REV	DATE	BY	QA	DATE	DESCRIPTION
1	7/17/14				PERMIT MODIFICATION REQUEST 135
0	2/16/98				ISSUE FOR TSCA/RCRA PERMIT APPLICATION

REVISION

PermaFix® environmental services
A Nuclear Services and Waste Management Company

DATE	
DRAWN	
CHECKED	
DFTG APVD	
ENGR	
APVD	
OTHER	
QA	
APPVD FOR IMPLEMENTATION BY	
FOR DATE	

MIXED WASTE FACILITY
BUILDING 13

FUNCTIONAL FLOW DESCRIPTION-LINE 400
HETEROGENEOUS SOLIDS/DEBRIS

SCALE: NONE | SHEET NO. 6
DWG. NO. 31001-P-001-06 | REV 1

Copy
Review & Recycle

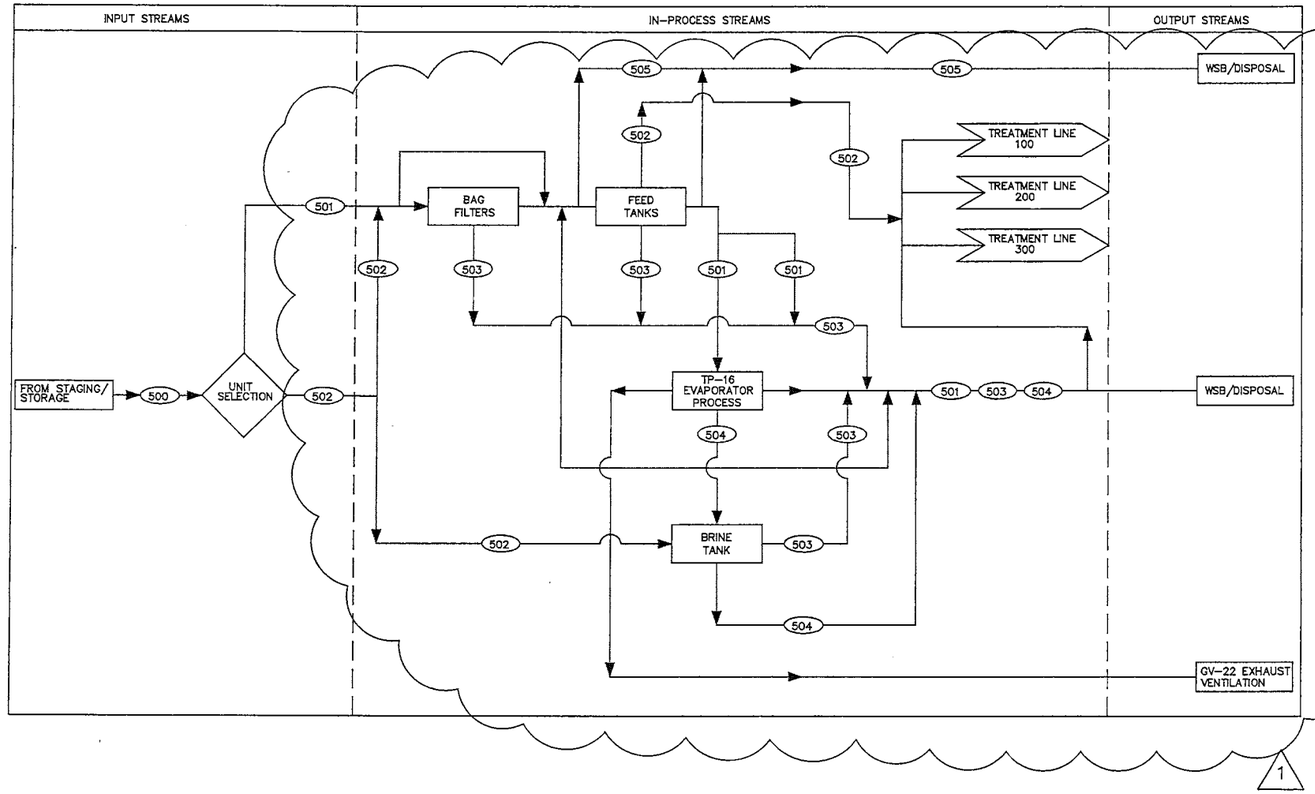

STREAM NO.	STREAM DESCRIPTION	STREAM RESTRICTIONS
LINE 500 INPUT STREAMS		
500	Waste streams requiring evaporation prior to treatment.	No Ignitable, Corrosive, or Reactive waste. No TSCA-Regulated PCB's. No High-TOC waste. No waste >10% VOC.
501	Inorganic liquids or sludges potentially contaminated with organics from tankers or containers to be volume reduced.	Same as Treatment Line-500.
502	Inorganic liquids or sludges potentially contaminated with organics to be added to either a feed tank, or other container, or to the brine tank prior to neutralization, solidification, or stabilization.	Same as Treatment Line-500.
LINE 500 IN-PROCESS STREAMS		
503	Sludges/Solids filtered or settled out of 501 to be stablized, solidified, or disposed.	Carries same waste codes designated to the input streams. Same restrictions as Treatement Line-500.
504	Brine and residue from evaporation process.	Same as Treatment Line-500
LINE 500 OUTPUT STREAMS		
505	RCRA empty containers.	None

*1 "Empty" as defined by WAC 173-303-160 and 40 CFR 761.79

ROBERT JOHN SCHREIBER
STATE OF WASHINGTON
37740
REGISTERED
PROFESSIONAL ENGINEER

PermaFix®
environmental services
A Nuclear Services and Waste Management Company

DATE	11/24/97
DRAWN	MKB
CHECKED	
DFTG APVD	
ENGR	DAS
APVD	
OTHER	
QA	
APPVD FOR IMPLEMENTATION BY_____ FOR DATE	

MIXED WASTE FACILITY
BUILDING 13
(MWTH)

FUNCTIONAL FLOW DESCRIPTION-LINE 500 ORGANIC LIQUIDS/SOLIDS (MWTH)

SCALE: NONE | SHEET NO. 7
31001-P-001-07 | REV 1

REV	DATE	BY	QA	DESCRIPTION
1			SDN 7/17/14	PERMIT MODIFICATION REQUEST 135
0				ISSUE FOR TSCA/RCRA PERMIT APPLICATION

REVISION

Copy
Review & Recycle

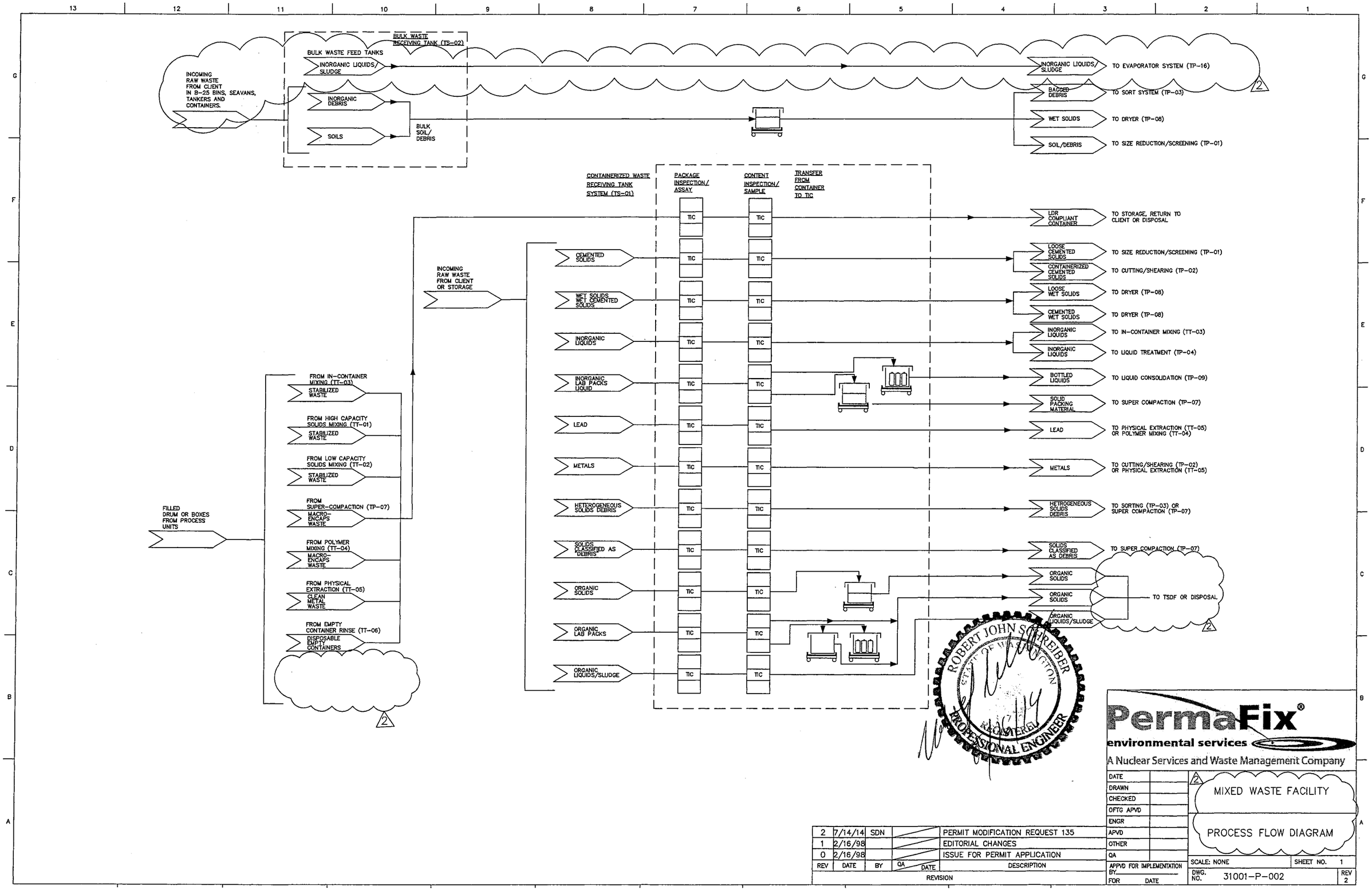

Copy
Review & Recycle

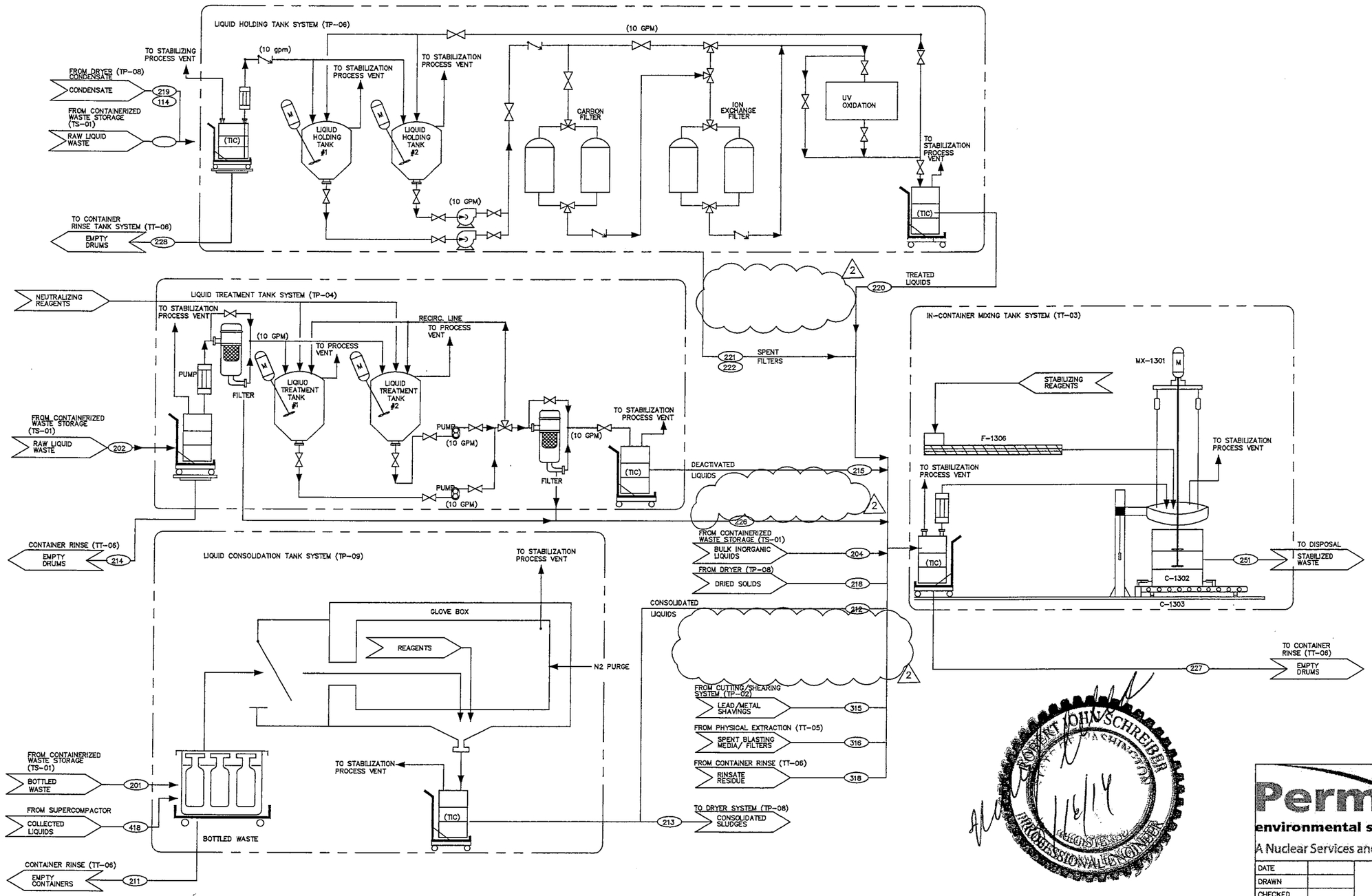

REV	DATE	BY	QA	DATE	DESCRIPTION
2	7/21/14				PERMIT MODIFICATION REQUEST 135
1	5/5/99				UPDATE PER ECN #31001-ECN-TT03
0	2/16/98				ISSUE FOR TSCA/RCRA PERMIT APPLICATION

REVISION

PermaFix® environmental services
A Nuclear Services and Waste Management Company

DATE	
DRAWN	
CHECKED	
DFTG APVD	
ENGR	
APVD	
OTHER	
QA	
APPVD FOR IMPLEMENTATION BY	
FOR DATE	

MIXED WASTE FACILITY
BUILDING 13

PROCESS FLOW DIAGRAM
LINE 200
SOILS/INORGANIC DEBRIS

SCALE: NONE | SHEET NO. 1
DWG. NO. 31001-P-004 | REV 2

Copy
Review & Recycle

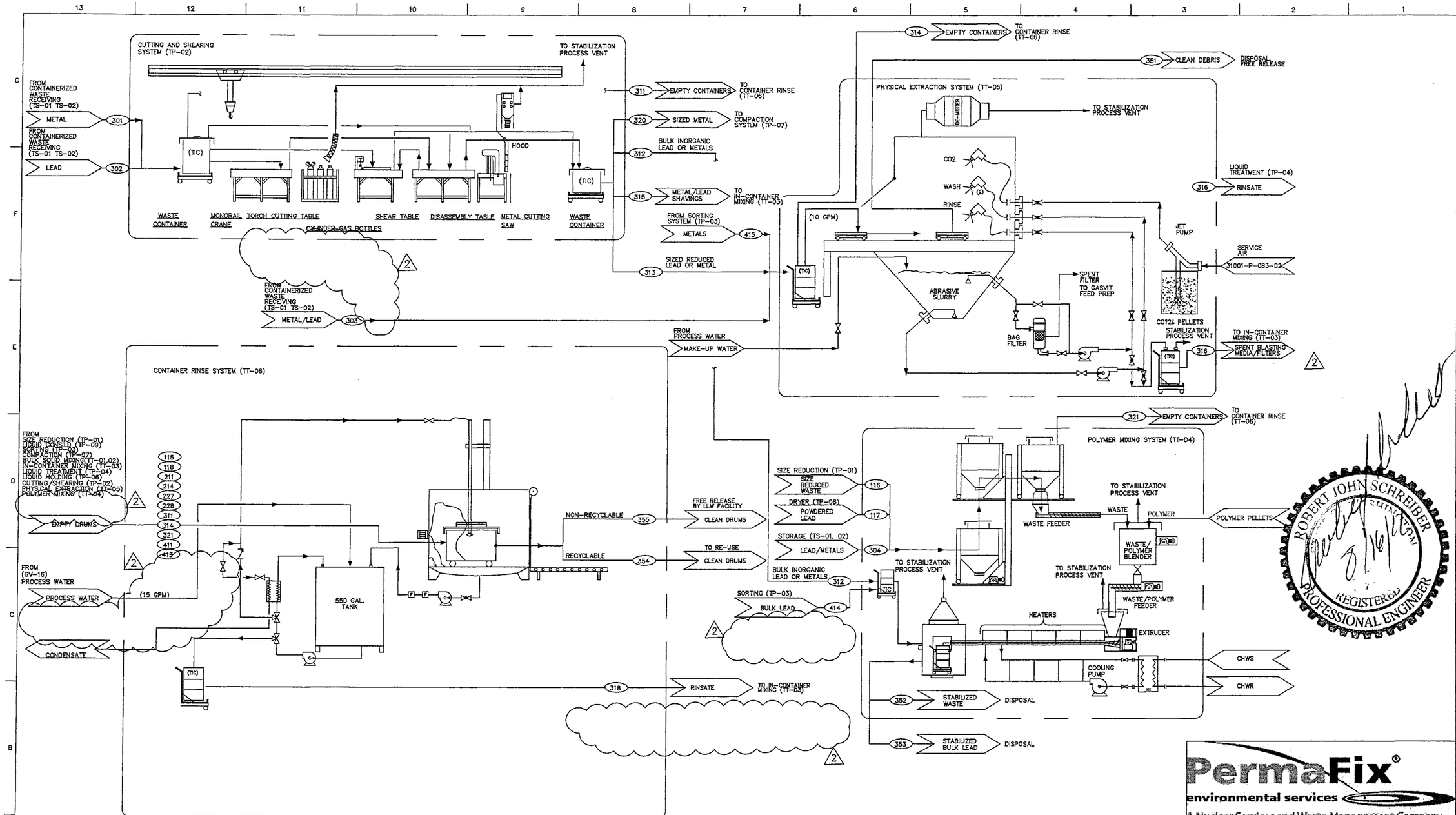

ROBERT JOHN SCHREIBER
STATE OF WASHINGTON
REGISTERED PROFESSIONAL ENGINEER
8/16/2

PermaFix®
environmental services
A Nuclear Services and Waste Management Company

DATE	11/24/97
DRAWN	AT
CHECKED	
DFTG APVD	
ENGR	JM
APVD	
OTHER	
QA	
APPVD FOR IMPLEMENTATION BY	
FOR DATE	

MIXED WASTE FACILITY
BUILDING 13

PROCESS FLOW DIAGRAM
LINE 300
METALS/LEAD

SCALE: NONE | SHEET NO. 1

31001-P-005 | REV 2

REV	DATE	BY	QA	DATE	DESCRIPTION
2			SDN	7/14/14	PERMIT MODIFICATION REQUEST 135
1				5/5/99	UPDATE PER ECN #31001-ECN-TT06, -TP02
D				2/16/98	ISSUE FOR TSCA/RCRA PERMIT APPLICATION

REVISION

Copy
Review & Recycle

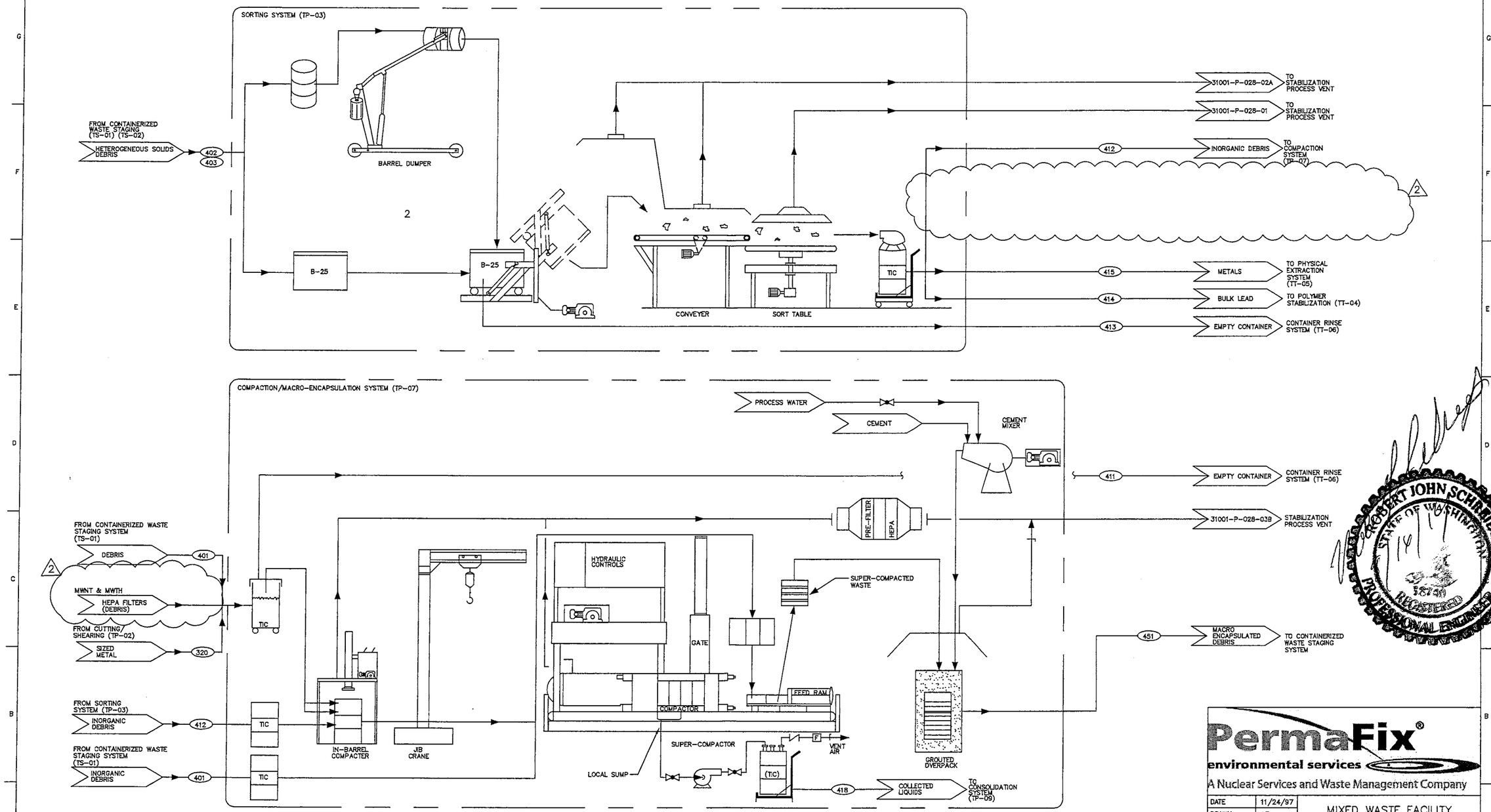

REV	DATE	BY	QA	DATE	DESCRIPTION
2			SDN	7/14/14	PERMIT MODIFICATION REQUEST 135
1				5/6/99	UPDATE PER ECN #31001-ECN-SB09
0				2/16/98	ISSUE FOR TSCA/RCRA PERMIT APPLICATION

REVISION

PermaFix® environmental services
A Nuclear Services and Waste Management Company

DATE	11/24/97
DRAWN	AT
CHECKED	
DFTG APVD	
ENGR	JM
APVD	
OTHER	
QA	
APPVD FOR IMPLEMENTATION BY_____ FOR DATE	

MIXED WASTE FACILITY
STABILIZATION BUILDING 13

PROCESS FLOW DIAGRAM
LINE 400
HETEROGENEOUS SOLIDS DEBRIS

SCALE: NONE | SHEET NO. 1

31001-P-006 | REV 2

ROBERT JOHN SCHREIBER
STATE OF WASHINGTON
14
18740
REGISTERED
PROFESSIONAL ENGINEER

Copy
Review & Recycle

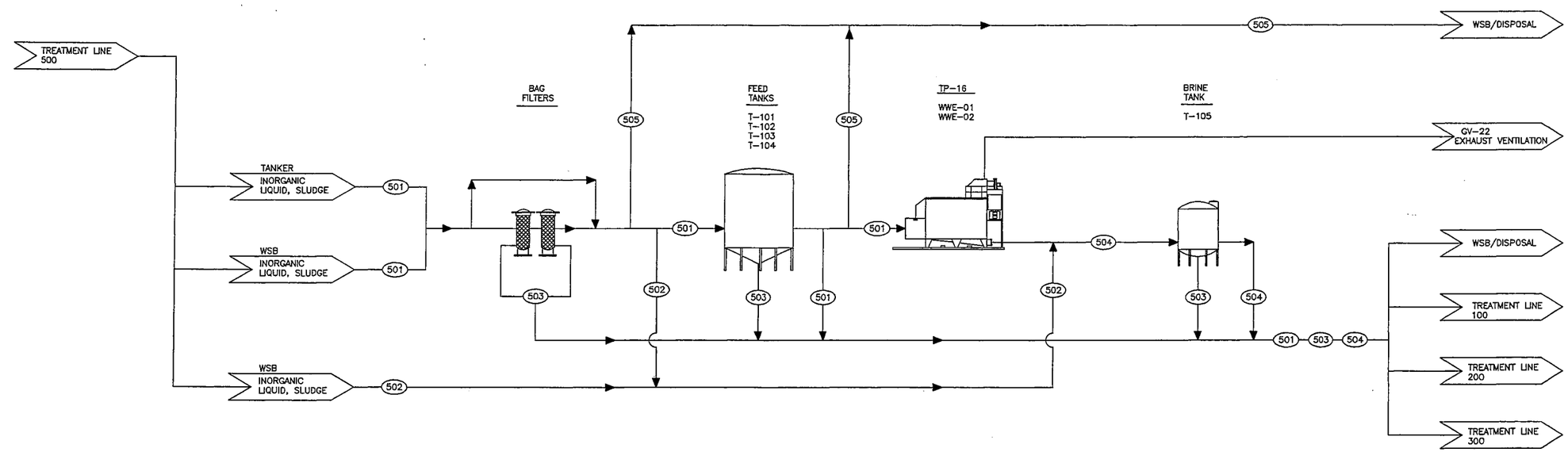

EVAPORATOR SYSTEM TP-16

MWTH

NOTE:

(XXX) = STREAM IDENTIFICATION TAG (DWG. 31001-P-001-07).

ROBERT JOHN SCHAFFER
STATE OF WASHINGTON
38740
REGISTERED
PROFESSIONAL ENGINEER

REV	DATE	BY	CHECKED	APPROVED	DESCRIPTION
2	6/13/14	SDN			PERMIT MODIFICATION REQUEST 135
1	3/30/01	RM	RAM	FF	AS-BUILT PER 31001-DCA-0032
0	2/16/98	JEF	CJF	FF	ISSUE FOR TSCA/RCRA PERMIT APP

REVISION

PermaFix®
environmental services
A Nuclear Services and Waste Management Company

DATE	
DRAWN	
CHECKED	
DFTG APVD	
ENGR	
APVD	
OTHER	
QA	

APPVD FOR IMPLEMENTATION BY_____
FOR DATE

MIXED WASTE FACILITY
STABILIZATION BUILDING 13
(MWTH)

PROCESS FLOW DIAGRAM
EVAPORATOR SYSTEM
TP-16

SCALE: NONE | SH 1

31001-P-050 | REV 2

Copy
Review & Recycle

GV-03, 04, 05 SYSTEMS REMOVED

2

DRAWING DELETED
FROM PERMIT

2

REV	DATE	BY	CHECKED	APPROVED	DESCRIPTION
2	6/30/14	adn			PERMIT MODIFICATION REQUEST 135
1	3/30/01	RM	RAM	FF	AS-BUILT PER 31001-DCA-0032
0	2/16/98	JEF	CJF	FF	ISSUE FOR TSCA/RCRA PERMIT APP

REVISION

PermaFix®
environmental services
A Nuclear Services and Waste Management Company

DATE	
DRAWN	
CHECKED	
BETG APVD	
ENGR	
APVD	
OTHER	
QA	
APPVD FOR IMPLEMENTATION BY. FOR DATE	

MIXED WASTE FACILITY
BUILDING 13

PROCESS FLOW – LINE 500
PROCESS CHAMBER & 1ST STAGE
SYNGAS (GV-03, 04, & 05)

SCALE: NONE | SH 1

31001-P-051 | REV 2

Copy
Review & Recycle

GV-06 SYSTEM REMOVED

2 DRAWING DELETED FROM PERMIT

REV	DATE	BY	CHECKED	APPROVED	DESCRIPTION
2	6/30/14	SDN			PERMIT MODIFICATION REQUEST 135
1	3/30/01	RM	RAM	FF	AS-BUILT PER 31001-DCA-0032
0	2/16/98	JEF	CJF	FF	ISSUE FOR TSCA/RCRA PERMIT APP

REVISION

PermaFix®
environmental services
A Nuclear Services and Waste Management Company

DATE	
DRAWN	
CHECKED	
BFTG APVD	
ENGR	
APVD	
OTHER	
QA	
APPVD FOR IMPLEMENTATION BY	
FOR DATE	

MIXED WASTE FACILITY
BUILDING 13

PROCESS FLOW DIAGRAM
LINE 500 – 2ND STAGE
SYNGAS TREATMENT (GV-06)

SCALE: NONE | SH 1 OF 2

31001-P-052 | REV 2

Copy
Review & Recycle

GV-07 SYSTEM REMOVED

6 DRAWING DELETED FROM PERMIT

REV	DATE	BY	CHECKED	APPROVED	DESCRIPTION
6	6/30/14	SDN			PERMIT MODIFICATION REQUEST 135
5	3/30/01	RM	RAM	FF	AS-BUILT PER 31001-DCA-0032
0	2/16/98	JEF	CJF	FF	ISSUE FOR TSCA/RCRA PERMIT APP

REVISION

PermaFix®
environmental services
A Nuclear Services and Waste Management Company

DATE	
DRAWN	
CHECKED	
DFTG APVD	
ENGR	
APVD	
OTHER	
QA	
APPVD FOR IMPLEMENTATION BY FOR DATE	

MIXED WASTE FACILITY
BUILDING 13

PROCESS FLOW DIAGRAM
LINE 500 – 3ND STAGE
SYNGAS TREATMENT (GV-07)

SCALE: NONE | SH 2 OF 2

31001-P-052 | REV 6

Copy
Review & Recycle

NOTE:

1. ALL EQUIPMENT ID NUMBERS ON THIS SHEET HAVE A GV-09 PREFIX UNLESS NOTED OTHERWISE.

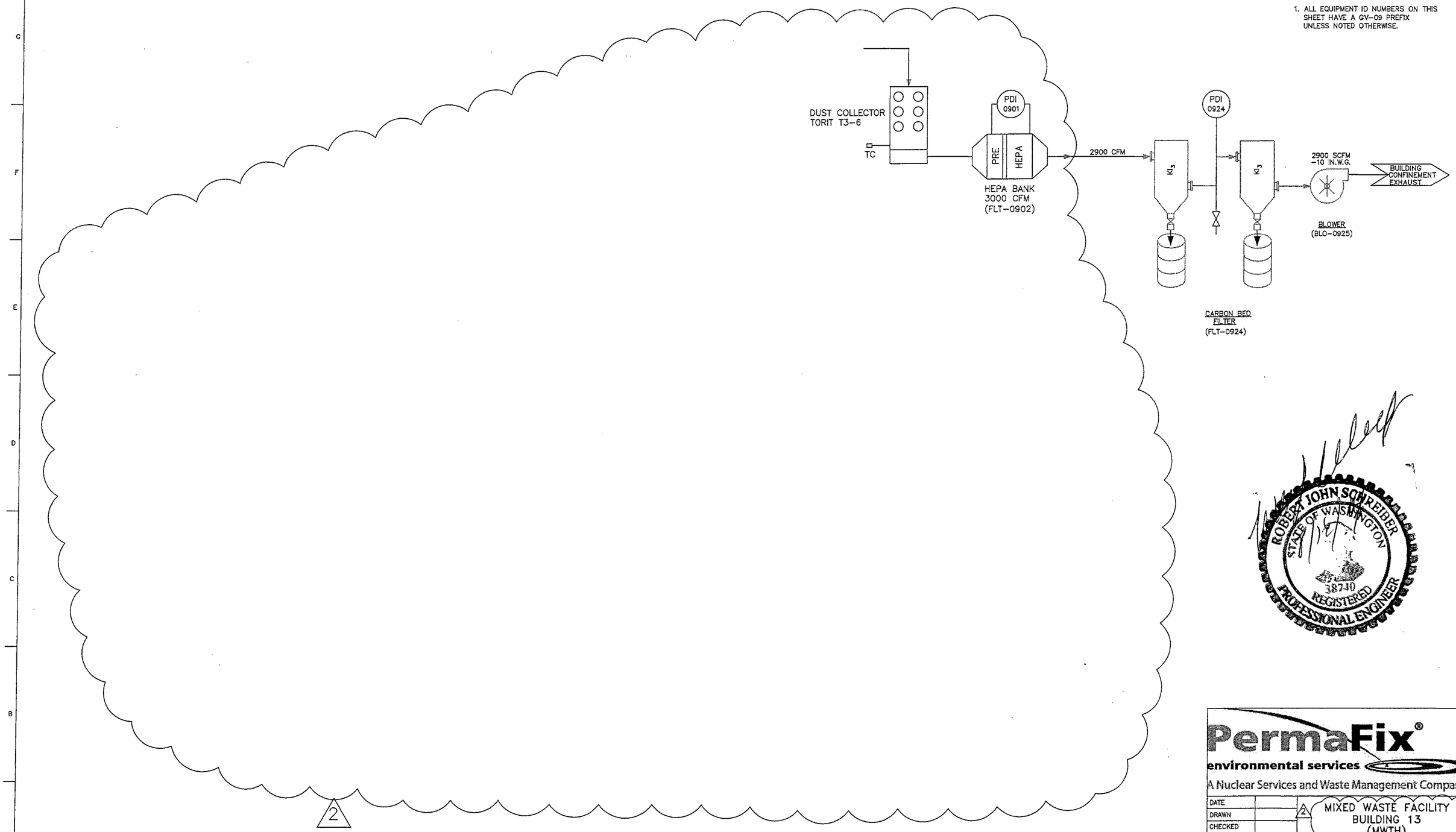

ROBERT JOHN SCHREIBER
STATE OF WASHINGTON
38740
REGISTERED
PROFESSIONAL ENGINEER

REV	DATE	BY	CHECKED	APPROVED	DESCRIPTION
1	6/13/14	SDN			PERMIT MODIFICATION REQUEST 135
1	3/30/01	RM	RAM	FF	AS-BUILT PER 31001-DCA-0032
0	2/16/98	JEF	CJF	FF	ISSUE FOR TSCA/RCRA PERMIT APP

REVISION

PermaFix®
environmental services
A Nuclear Services and Waste Management Company

DATE	
DRAWN	
CHECKED	
DFTG APVD	
ENGR	
APVD	
OTHER	
QA	
APPVD FOR IMPLEMENTATION BY FOR DATE	

2 MIXED WASTE FACILITY
BUILDING 13
(MWTH)

PROCESS FLOW DIAGRAM
PROCESS VENT SYSTEM
(GV-09)

SCALE: NONE | SH 1

31001-P-053 | REV 2

Copy
Review & Recycle

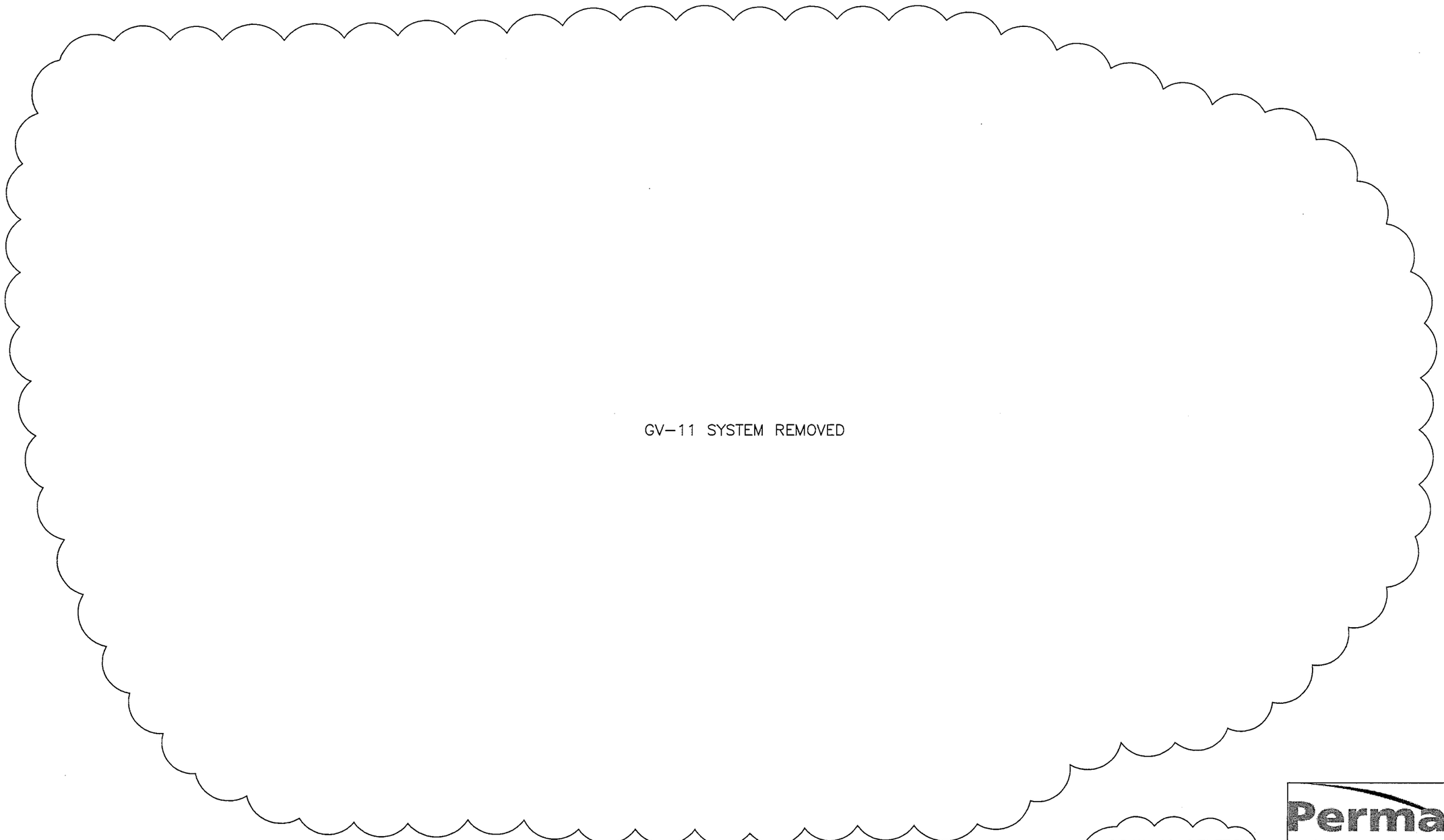

4 DRAWING DELETED FROM PERMIT

REV	DATE	BY	CHECKED	APPROVED	DESCRIPTION
4	6/13/14	SDN			PERMIT MODIFICATION REQUEST 135
3	3/30/01	JA	RAM	FF	AS-BUILT PER 31001-DCA-0032
2	6/28/00	CR	WJS	FF	ISSUED PER 31001-DCA-0019
1	6/15/00	CR	WJS	FF	ISSUED PER DCA 31001-DCA-0018
0	2/16/98	–	JM	PEB	ISSUE FOR TSCA/RCRA PERMIT APPLICATION

REVISION

PermaFix® environmental services
A Nuclear Services and Waste Management Company

DATE	
DRAWN	
CHECKED	
QFTG APVD	
ENGR	
APVD	
OTHER	
QA	
APPVD FOR IMPLEMENTATION BY	
FOR DATE	

MIXED WASTE FACILITY
BUILDING 13

PROCESS FLOW DIAGRAM
SECONDARY WASTE
TREATMENT (GV-11)

SCALE: NONE SH 1

31001-P-054 REV 4

Copy
Review & Recycle

NOTES:
1. ALL ID NUMBERS SHOWN ON THIS SHEET HAVE A PREFIX OF GV-13, UNLESS NOTED OTHERWISE.

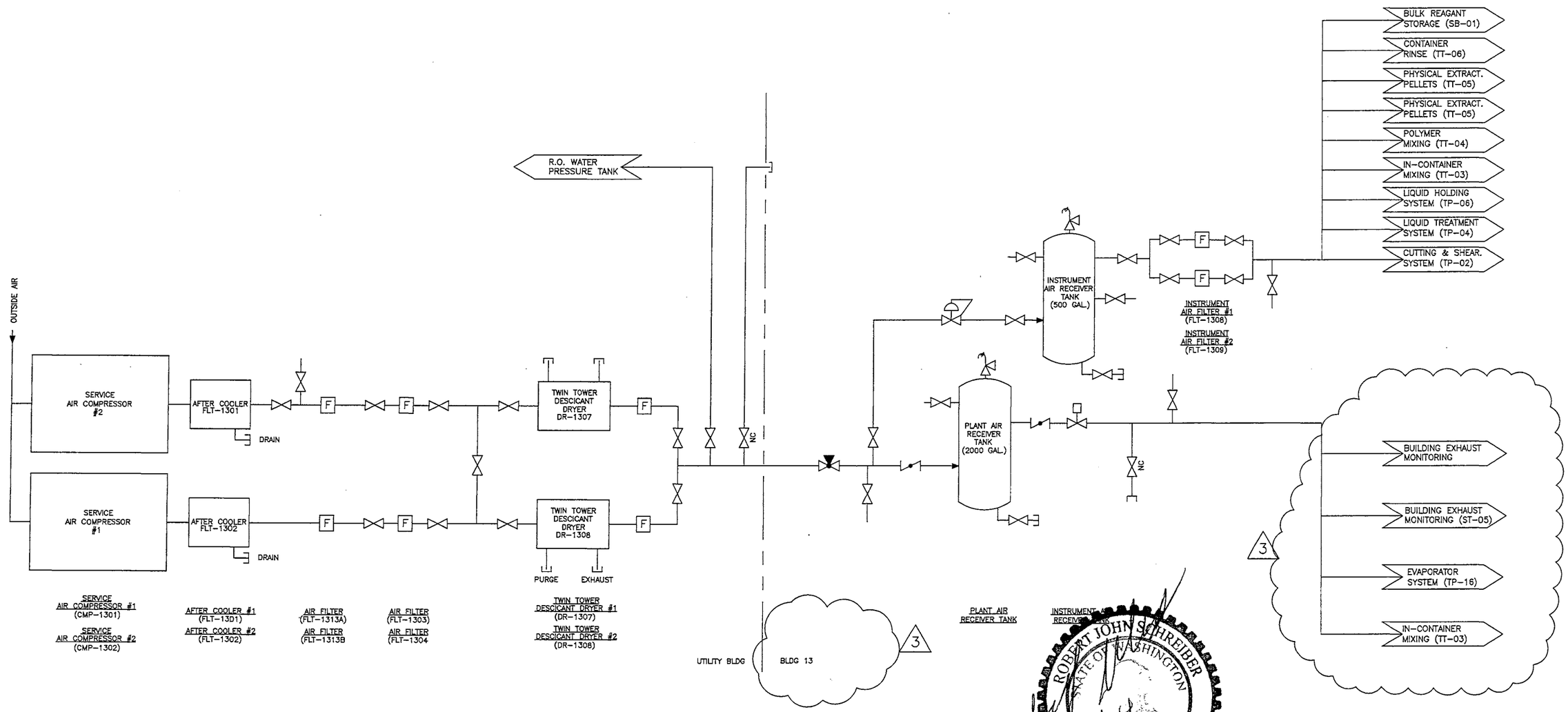

ROBERT JOHN SCHREIBER
STATE OF WASHINGTON
REGISTERED PROFESSIONAL ENGINEER

REV	DATE	BY	CHECKED	APPROVED	DESCRIPTION
3	6/13/14	RM			PERMID MODIFICATION REQUEST 135
2	3/30/01	RM	RAM	FF	AS-BUILT PER 31001-DCA-0032
1	6/17/98	ECE	ATG	FF	DELETE HEAT RECOVERY BOILER
0	2/16/98	ECE	ATG	FF	ISSUE FOR TSCA/RCRA PERMIT APP

REVISION

PermaFix®
environmental services
A Nuclear Services and Waste Management Company

DATE	
DRAWN	
CHECKED	
DFTG APVD	
ENGR	
APVD	
OTHER	
QA	
APPVD FOR IMPLEMENTATION BY... FOR DATE	

MIXED WASTE FACILITY
STABILIZATION BUILDING 13
& UTILITY BLDG 18

PROCESS FLOW DIAGRAM
SERVICE/INSTRUMENT AIR
GV-13

SCALE: NONE | SH 1

31001-P-055 | REV 3

Copy
Review & Recycle

NOTES:

1. ALL ID NUMBERS SHOWN ON THIS SHEET HAVE A PREFIX OF GV-15, UNLESS NOTED OTHERWISE.

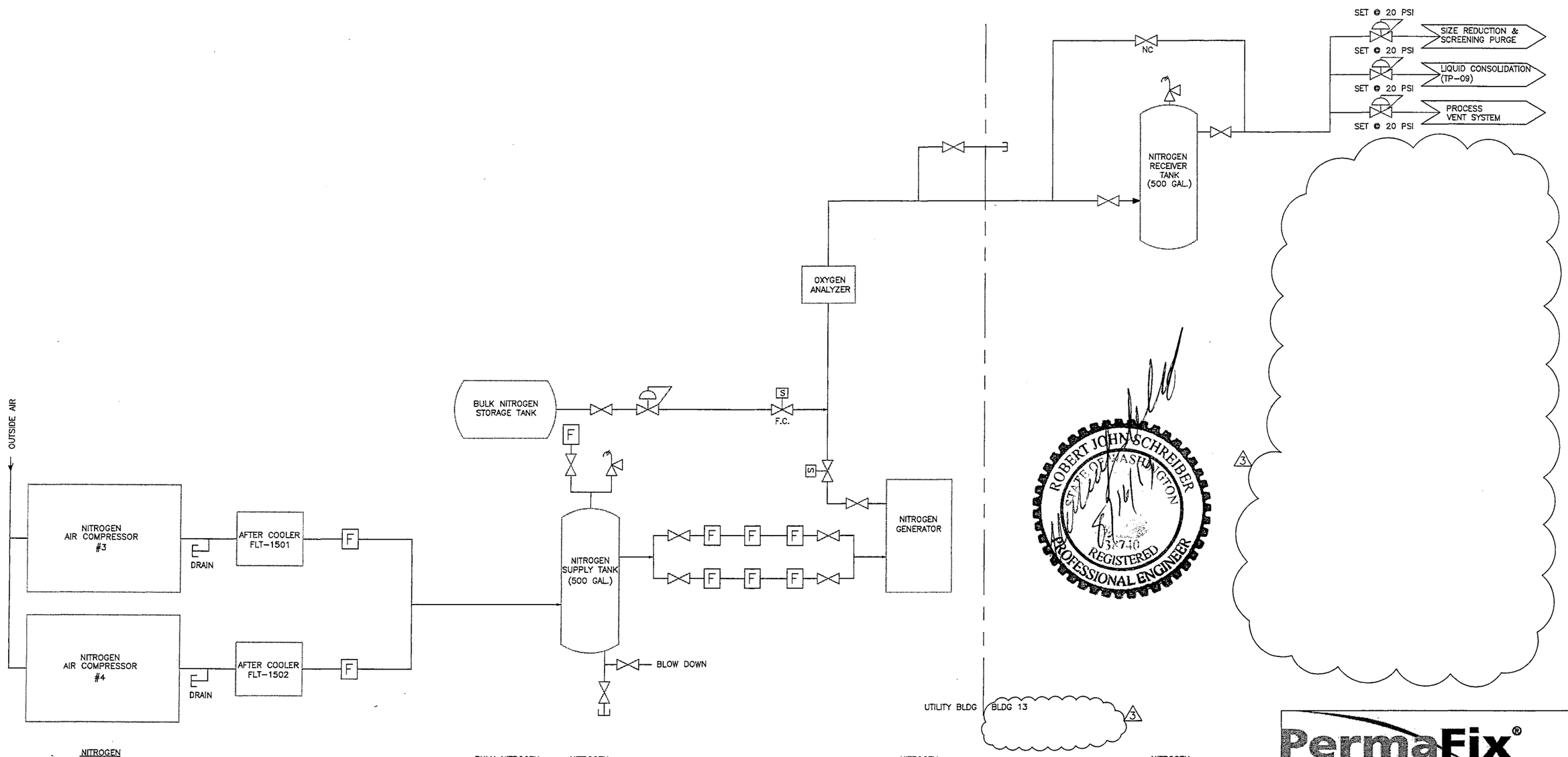

ROBERT JOHN SCHREIBER
STATE OF WASHINGTON
33740
REGISTERED PROFESSIONAL ENGINEER

PermaFix®
environmental services
A Nuclear Services and Waste Management Company

REV	DATE	BY	CHECKED	APPROVED	DESCRIPTION
3	6/24/14	SDN			PERMIT MODIFICATION REQUEST 135
2	3/30/01	RM	RAM	FF	AS-BUILT PER 31001-DCA-0030
1	3/16/98	ECE	ATG	FF	DELETE HEAT RECOVERY BOILER
0	2/16/98	ECE	ATG	FF	ISSUE FOR TSCA/RCRA PERMIT APP

REVISION

DATE	
DRAWN	3
CHECKED	
DFTG APVD	
ENGR	
APVD	
OTHER	
QA	
APPVD FOR IMPLEMENTATION BY	
FOR DATE	

MIXED WASTE FACILITY
STABILIZATION BUILDING 13
& UTILITY BLDG 18

PROCESS FLOW DIAGRAM
NITROGEN SUPPLY
(GV-15)

SCALE: NONE | SH 1

31001-P-056 | REV 3

Copy
Review & Recycle

GV-18 SYSTEM REMOVED

4

4

DRAWING DELETED
FROM PERMIT

REV	DATE	BY	CHECKED	APPROVED	DESCRIPTION
4	6/16/14	SDN			PERMIT MODIFICATION REQUEST 135
3	3/30/01	RM	RAM	FF	AS-BUILT PER 31001-DCA-0032
2	6/17/98	ECE	ATG	FF	EDITORIAL CHANGES
1	2/16/98	ECE	ATG	FF	DELETE HEAT RECOVERY BOILER
0	2/16/98	ECE	ATG	FF	ISSUE FOR TSCA/RCRA PERMIT APP

REVISION

PermaFix®
environmental services
A Nuclear Services and Waste Management Company

DATE	
DRAWN	
CHECKED	
~~DFTG APVD~~	
ENGR	
APVD	
OTHER	
QA	
APPVD FOR IMPLEMENTATION BY	
FOR DATE	

MIXED WASTE FACILITY
BUILDING 13

PROCESS FLOW DIAGRAM
STEAM BOILER
(GV-18)

SCALE: NONE | SH 1

31001-P-057 | REV 4

Copy
Review & Recycle

NOTES:

1. ALL ID NUMBERS SHOWN ON THIS SHEET HAVE A PREFIX OF GV-16.

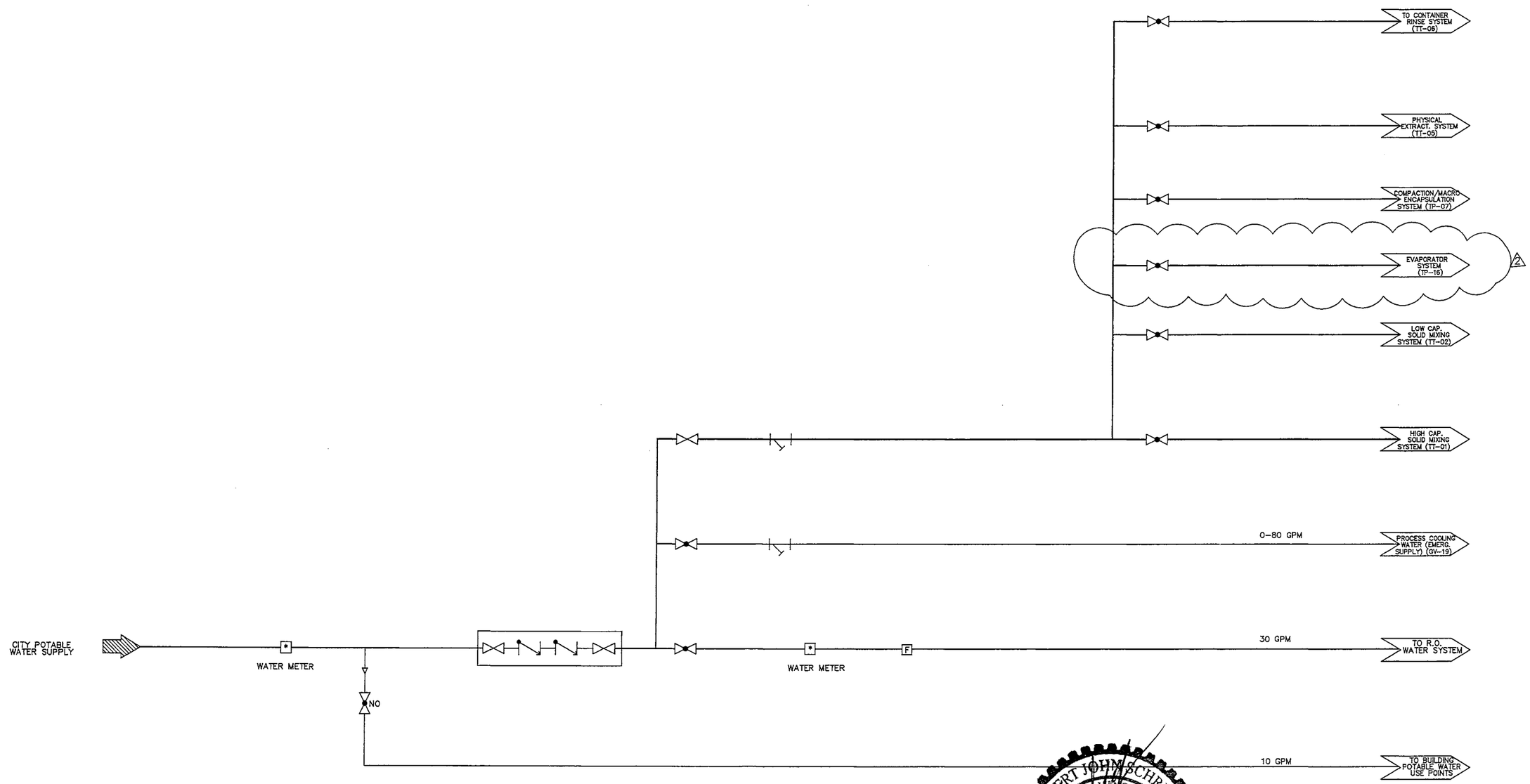

ROBERT JOHN SCHREIBER
STATE OF WASHINGTON
REGISTERED
PROFESSIONAL ENGINEER
6/30/14

REV	DATE	BY	CHECKED	APPROVED	DESCRIPTION
2	6/30/14	SDN			PERMIT MODIFICATION REQUEST 135
1	3/30/01	RM	RAM	FF	AS-BUILT PER 31001-DCA-0032
0	2/16/98	JEF	CJF	FF	ISSUE FOR TSCA/RCRA PERMIT APP

REVISION

PermaFix® environmental services
A Nuclear Services and Waste Management Company

DATE	
DRAWN	
CHECKED	
DFTG APVD	
ENGR	
APVD	
OTHER	
QA	
APPVD FOR IMPLEMENTATION BY: FOR DATE	

MIXED WASTE FACILITY (MWNT) & (MWTH)

PROCESS FLOW DIAGRAM
PROCESS WATER SUPPLY
(GV-16)

SCALE: NONE | SH 1 OF 4

31001-P-058 | REV 2

Copy
Review & Recycle

NOTES:
1. ALL ID NO'S ON THIS SHEET HAVE A PREFIX OF GV-17, UNLESS NOTED OTHERWISE.

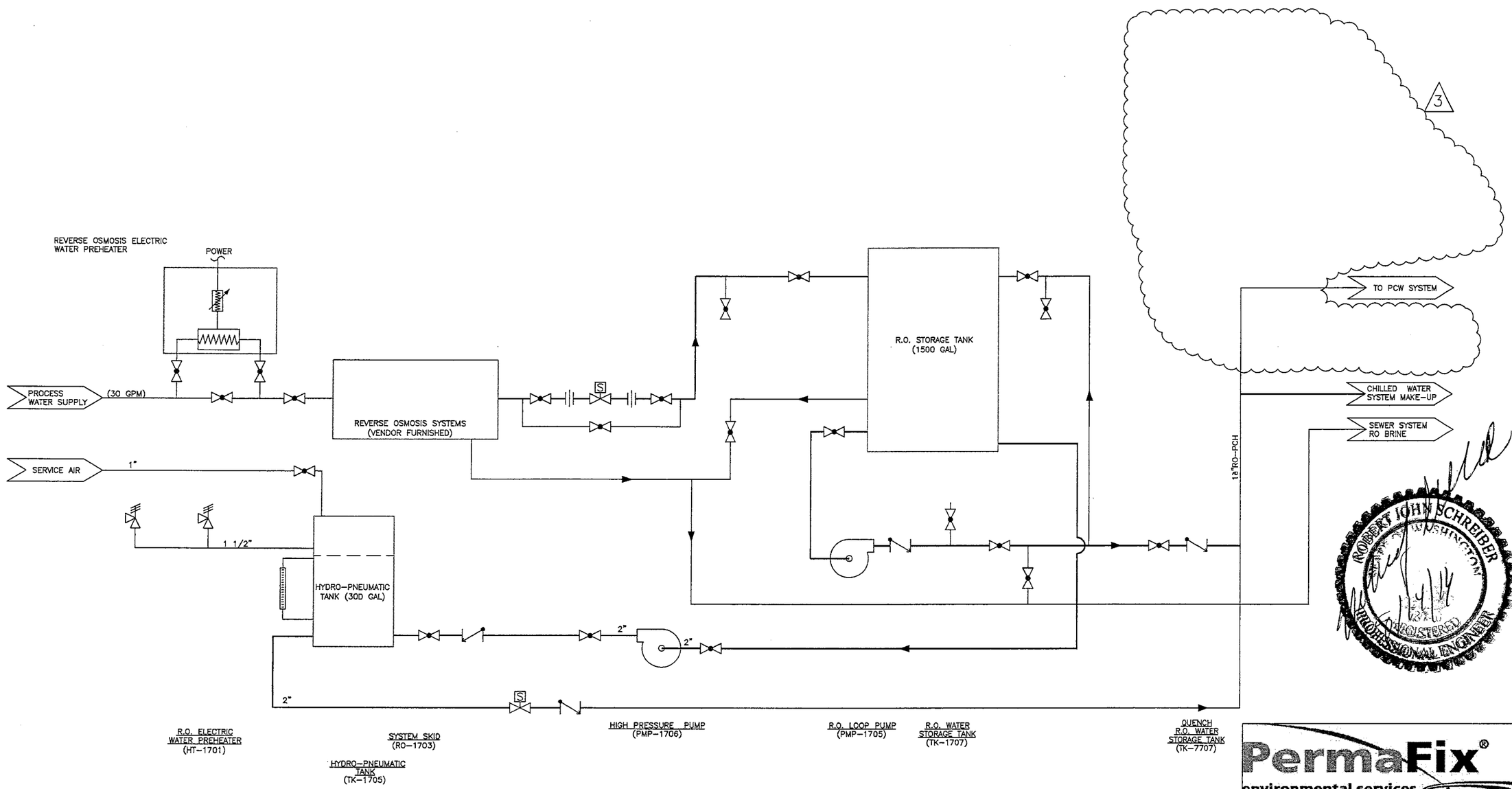

ROBERT JOHN SCHREIBER
STATE OF WASHINGTON
REGISTERED PROFESSIONAL ENGINEER

PermaFix®
environmental services
A Nuclear Services and Waste Management Company

REV	DATE	BY	CHECKED	APPROVED	DESCRIPTION
2	6/25/14	SDN			PERMIT MODIFICATION REQUEST 135
2	3/30/01	RM	RAM	FF	AS-BUILT PER 31001-DCA-0032
1	3/16/98	ECE	ATG	FF	DELETE HEAT RECOVERY BOILER
0	2/16/98	ECE	ATG	FF	ISSUE FOR TSCA/RCRA PERMIT APP

REVISION

DATE	
DRAWN	3
CHECKED	
DFTG APVD	
ENGR	
APVD	
OTHER	
QA	
APPVD FOR IMPLEMENTATION BY	
FOR DATE	

MIXED WASTE FACILITY
BUILDING 13
& UTILITY BLDG 18

PROCESS FLOW DIAGRAM
R.O. WATER SUPPLY
GV-17

SCALE: NONE | SH 2 OF 4

31001-P-058 | REV 3

Copy 1
Review & Recycle

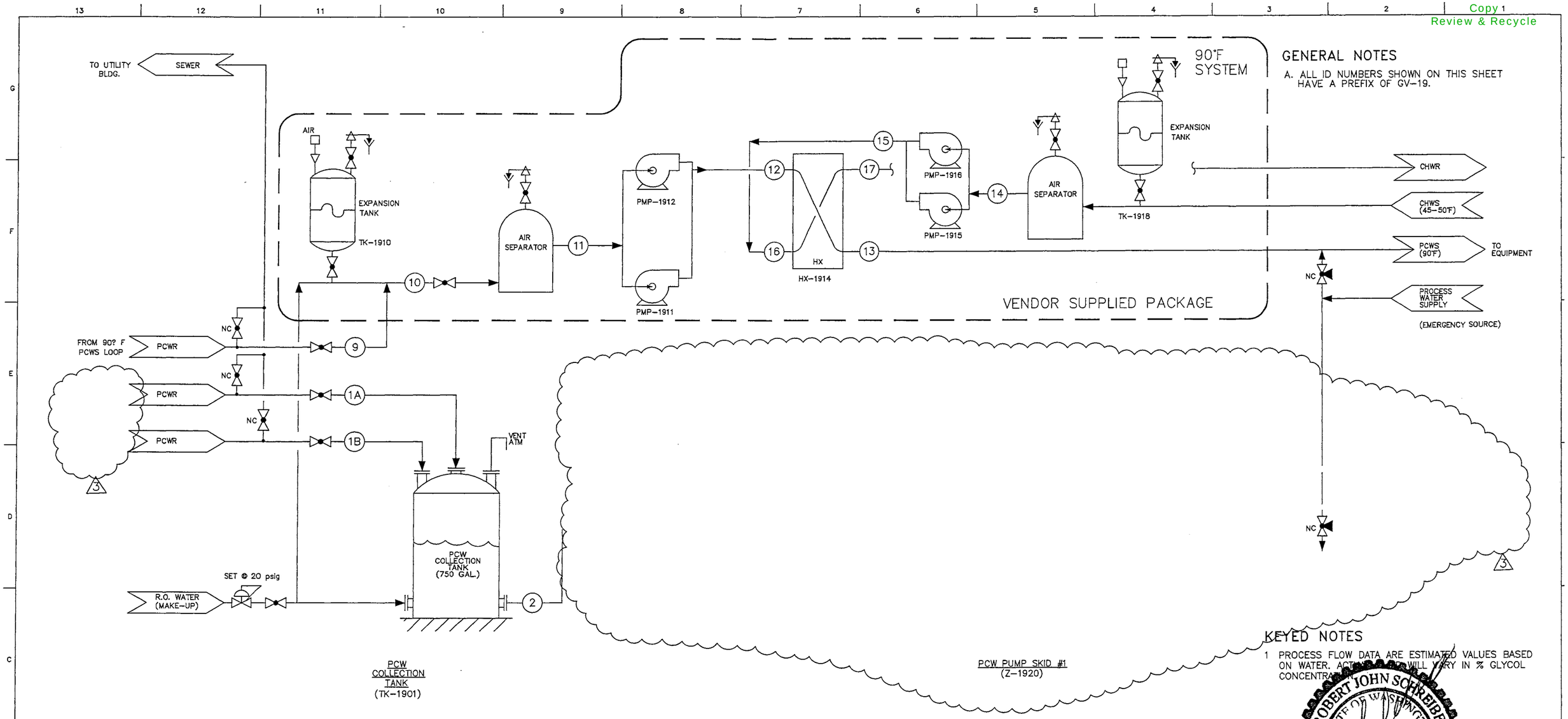

GENERAL NOTES

A. ALL ID NUMBERS SHOWN ON THIS SHEET HAVE A PREFIX OF GV-19.

KEYED NOTES

1 PROCESS FLOW DATA ARE ESTIMATED VALUES BASED ON WATER. ACTUAL [illegible] WILL VARY IN % GLYCOL CONCENTRA[illegible]

PROCESS FLOW DATA

	UNITS	1A	1B	2	9	10	11	12	13	14	15	16	17
DESCRIPTION													
FLUID		WATER	WATER	WATER	WATER	WATER	WATER	WATER	WATER	WATER	WATER	WATER	WATER
PRESSURE	PSIG												
TEMP	°F												
FLOW	GPM												
DENSITY	lbm/ft³	62.4	62.4	62.4	62.4	62.4	62.4	62.4	62.4	62.4	62.4	62.4	62.4
VISCOSITY	CP												
Cp	BTU / lbm °F	1.00	1.00	1.00	1.00	1.00	1.00	1.00	1.00	1.00	1.00	1.00	1.00

REV	DATE	BY	CHECKED	APPROVED	DESCRIPTION
3	8/13/14	SDN			PERMIT MODIFICATION REQUEST 135
2	3/30/01	RM	RAM	FF	AS-BUILT PER 31001-DCA-0032
1	3/16/98	ECE	ATG	FF	CHANGES PER 31001-DCA-009
0	2/16/98	ECE	ATG	FF	ISSUE FOR TSCA/RCRA PERMIT APP

REVISION

DATE	
DRAWN	
CHECKED	
DFTG APVD	
ENGR	
APVD	
OTHER	
QA	
APPVD FOR IMPLEMENTATION BY	
FOR DATE	

PermaFix® environmental services
A Nuclear Services and Waste Management Company

MIXED WASTE FACILITY
GASVIT BUILDING

PROCESS FLOW DIAGRAM
PROCESS COOLING WATER
(GV-19)

SCALE: NONE | SH 3 OF 4

31001-P-058 | REV 3

Copy
Review & Recycle

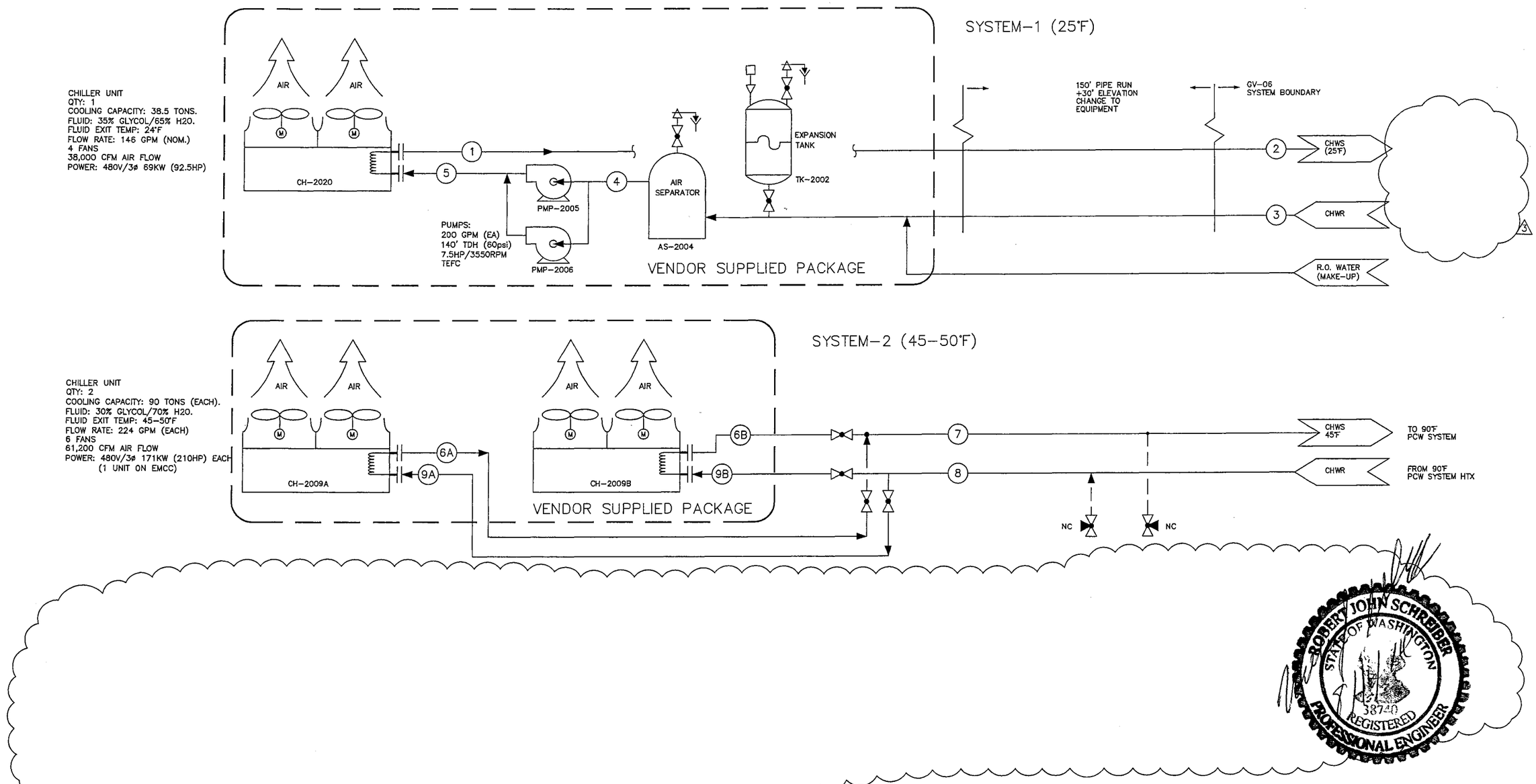

PROCESS FLOW DATA

	UNITS	1	2	3	4	5	6A	6B	7	8	9A	9B	10	11	12	13
DESCRIPTION																
FLUID		WATER	WATER	WATER	WATER	WATER	WATER	WATER	WATER	WATER	WATER	WATER	WATER	WATER	WATER	WATER
PRESSURE	PSIG	100	95	50	48	105										
TEMP	°F	24	24	32	32	32										
FLOW	GPM															
DENSITY	lbm/ft³	62.4	62.4	62.4	62.4	62.4	62.4	62.4	62.4	62.4	62.4	62.4	62.4	62.4	62.4	62.4
VISCOSITY	CP															
Cp	BTU/lbm °F	1.00	1.00	1.00	1.00	1.00	1.00	1.00	1.00	1.00	1.00	1.00	1.00	1.00	1.00	1.00

1

GENERAL NOTES

A. ALL ID NUMBERS SHOWN ON THIS SHEET HAVE A PREFIX OF GV-20.

KEYED NOTES X

1 PROCESS FLOW DATA ARE ESTIMATED VALUES BASED ON WATER. ACTUAL FLUID WILL VARY IN % GLYCOL CONCENTRATION.

REV	DATE	BY	CHECKED	APPROVED	DESCRIPTION
3	6/30/14	SDN			PERMIT MODIFICATION REQUEST 135
2	3/30/01	RM	RAM	FF	AS-BUILT PER 31001-DCA-0032
1	3/16/98	ECE	ATG	FF	CHANGES PER 31001-DCA-009
0	2/16/98	ECE	ATG	FF	ISSUE FOR TSCA/RCRA PERMIT APP

REVISION

PermaFix® environmental services
A Nuclear Services and Waste Management Company

DATE	
DRAWN	
CHECKED	
DFTG APVD	
ENGR	
APVD	
OTHER	
QA	
APPVD FOR IMPLEMENTATION BY	
FOR DATE	

MIXED WASTE FACILITY
BUILDING 13

PROCESS FLOW DIAGRAM
CHILLED WATER
GV-20

SCALE: NONE | SH 4 OF 4

31001-P-058 | REV 3

Copy
Review & Recycle

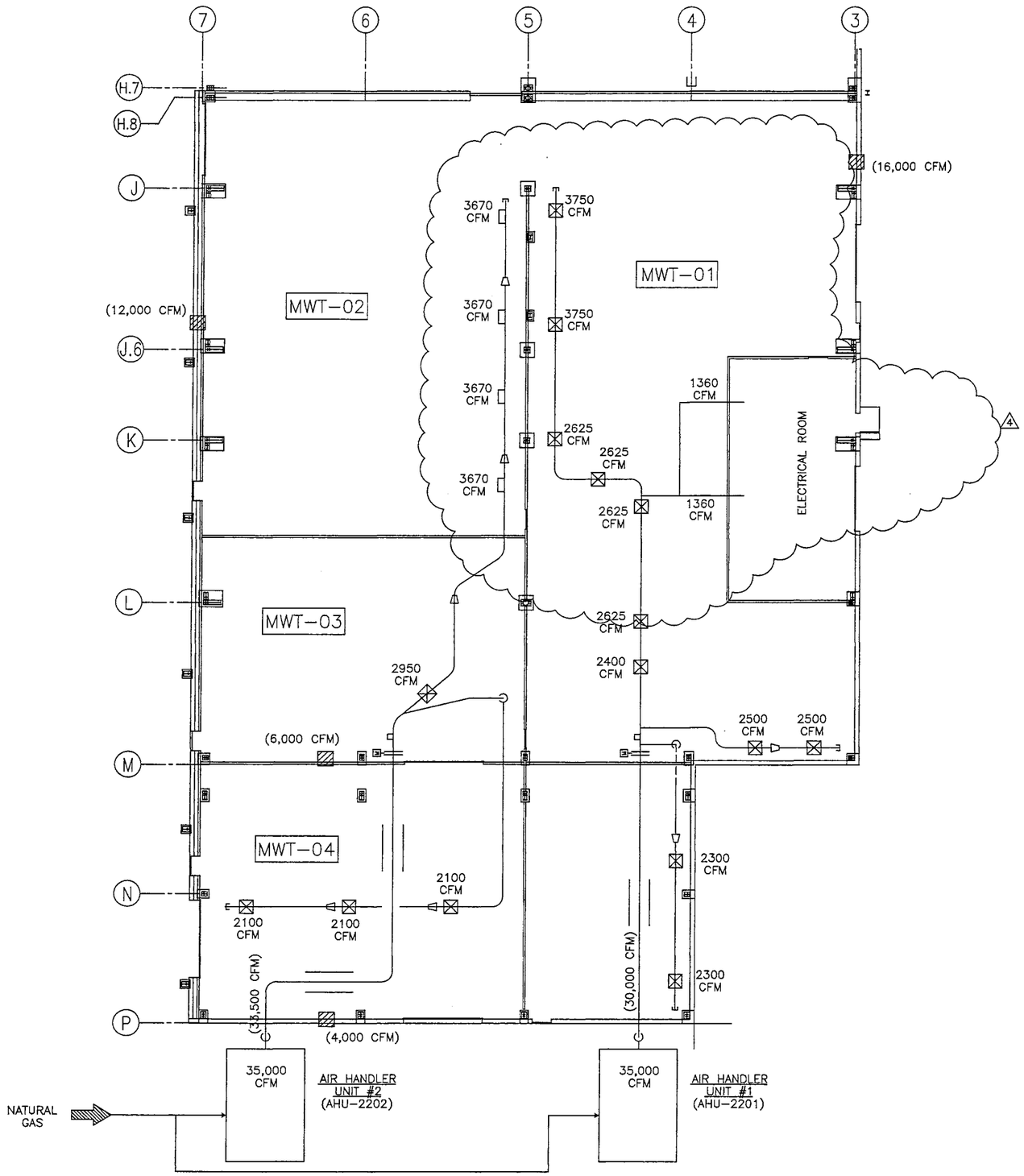

GENERAL NOTES

A. ALL ID NUMBERS ON THIS SHEET HAVE A PREFIX OF GV-22, UNLESS NOTED OTHERWISE.

B. SEE DRAWINGS 31001-HV-152, SHEET 1, FOR REQUIRED AIR CHANGES.

KEYED NOTES

1.

2. BACKDRAFT DAMPERS INSTALLED ON BUILDING EXTERIOR WALLS SHALL PROTECT AGAINST ABNORMAL NEGATIVE BUILDING PRESSURE IN THE EVENT OF LOSS OF SUPPLY AIR.

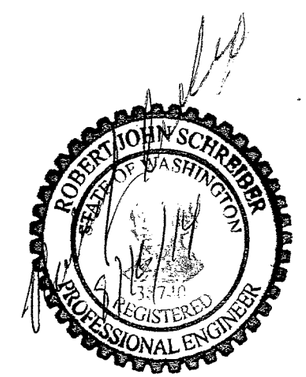

REV	DATE	BY	CHECKED	APPROVED	DESCRIPTION
4	6/30/14	SDN			PERMIT MODIFICATION REQUEST 135
3	3/30/01	RM	RAM	FF	AS-BUILT PER 31001-DCA-0032
2	5/25/00		JM	FF	AS-BUILT PER 31001-DCA-0016
1	12/23/98		JM		ISSUE FOR BID
0	2/16/98		PEB	DAS	ISSUE FOR TSCA/RCRA PERMIT APP

REVISION

PermaFix® environmental services
A Nuclear Services and Waste Management Company

DATE	
CHECKED	
DFTG APVD	
ENGR	
APVD	
OTHER	
QA	
APPVD FOR IMPLEMENTATION BY_____ FOR DATE	

MIXED WASTE FACILITY
BUILDING 13

PROCESS FLOW DIAGRAM
MWTH CONFINEMENT (BLDG HVAC)
(SUPPLY) GV-22

SCALE: NONE | SH 1 OF 2

31001-P-059 | REV 4

Copy
Review & Recycle

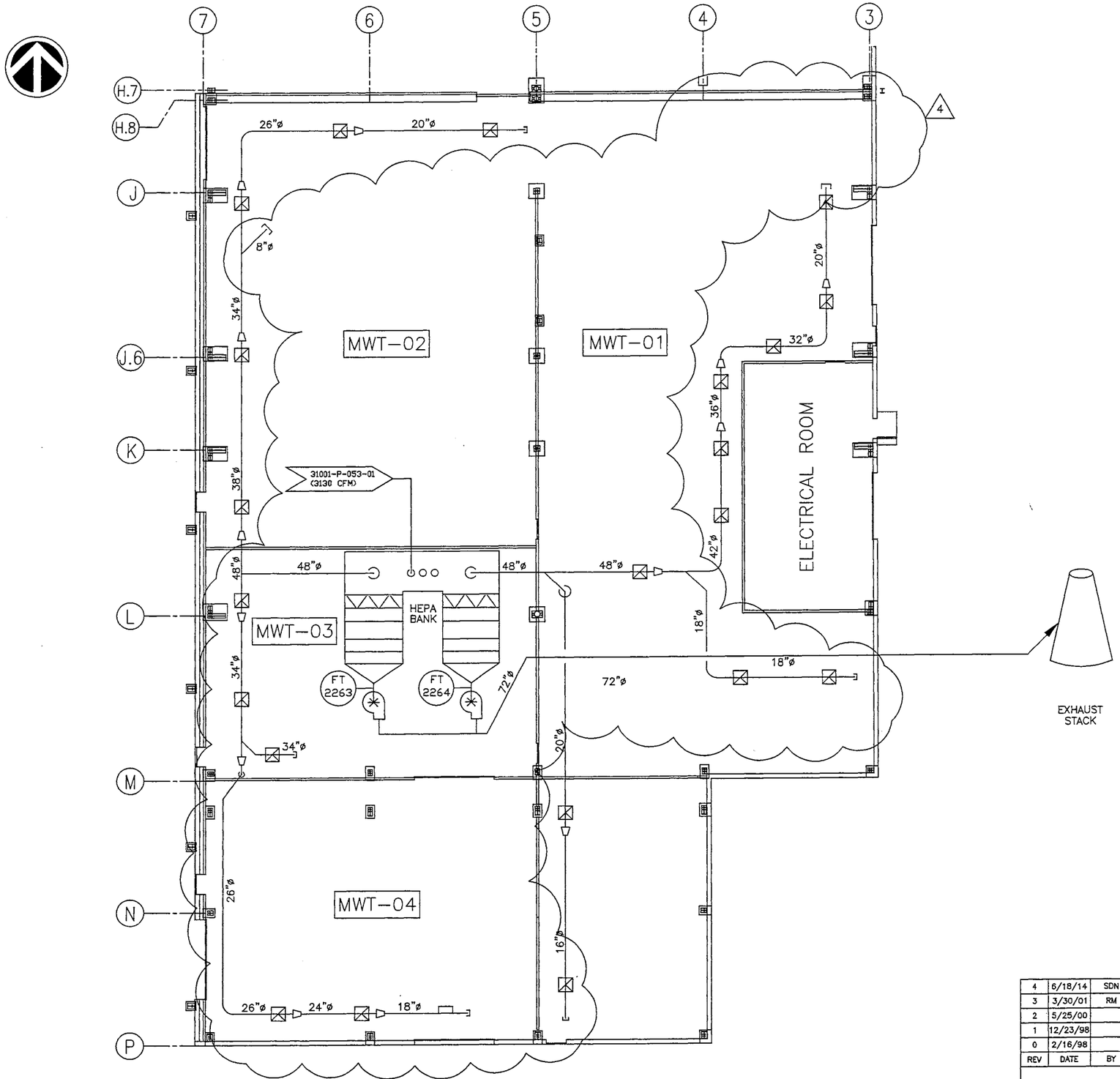

GENERAL NOTES

A. ALL ID NUMBERS ON THIS SHEET HAVE A PREFIX OF GV-22, UNLESS NOTED OTHERWISE.

REV	DATE	BY	CHECKED	APPROVED	DESCRIPTION
4	6/18/14	SDN			PERMIT MODIFICATION REQUEST 135
3	3/30/01	RM	RAM	FF	AS-BUILT PER 31001-DCA-0032
2	5/25/00		JM	FF	AS-BUILT PER 31001-DCA-0016
1	12/23/98		JM		ISSUE FOR BID
0	2/16/98		PEB	DAS	ISSUE FOR TSCA/RCRA PERMIT APP

REVISION

PermaFix®
environmental services
A Nuclear Services and Waste Management Company

DATE	
CHECKED	
DFTG APVD	
ENGR	
APVD	
OTHER	
QA	
APPVD FOR IMPLEMENTATION BY_____ FOR DATE	

MIXED WASTE FACILITY
BUILDING 13

PROCESS FLOW DIAGRAM
MWTH CONFINEMENT (BLDG HVAC)
GV-22 (EXHAUST)

SCALE: NONE | SH 2 OF 2

31001-P-059 | REV 4

Copy
Review & Recycle

PIPE AND FITTING SYMBOLS

- WELDED JOINT
- SCREWED JOINT (OR GENERIC SINGLE LINE)
- GROOVED END JOINT
- FLANGED JOINT
- HUB END FLG JOINT
- WELDNECK FLANGE JOINT
- STUB END OR FLANGE ADAPTOR WITH FLANGE RING
- MECHANICAL JOINT
- BELL AND SPIGOT END (LEADED)
- HUB AND SPIGOT JOINT (RUBBER GASKET)
- GROOVED END ADAPTER FLANGE
- FLANGED COUPLING ADAPTER
- FLEXIBLE COUPLING
- FLEXIBLE COUPLING WITH THRUST TIES
- BELLOWS EXPANSION JOINT
- BELLOWS EXPANSION JOINT WITH THRUST TIES
- FLEXIBLE CONNECTOR
- UNION
- ELBOW, 45 DEGREE
- ELBOW, 90 DEGREE
- ELBOW, 90 DEGREE LONG RADIUS
- ELBOW, 90 DEGREE REDUCING
- ELBOW UP
- ELBOW DOWN
- DROP IN RUN
- TEE
- TEE, REDUCING
- TEE UP
- TEE DOWN
- LATERAL
- LATERAL UP
- LATERAL DOWN
- REDUCER, CONCENTRIC
- REDUCER, ECCENTRIC
- PIPE CAP
- PIPE PLUG
- BLIND FLANGE
- ANCHOR
- WALL ANCHOR
- PIPE ALIGNMENT GUIDE

VALVE SYMBOLS

- BALL VALVE
- VEE-BALL VALVE
- THREEWAY BALL VALVE ARROWS INDICATE FLOW PATTERN
- BUTTERFLY VALVE
- CHECK, SWING VALVE
- CHECK, BALL VALVE
- CHECK, WAFER VALVE
- DIAPHRAGM VALVE
- GATE VALVE
- GATE, KNIFE VALVE
- GATE, ANGLE VALVE
- GATE, FLANGED VALVE
- GATE, SLIDE
- GLOBE VALVE
- PADDLE WHEEL FLOW METER
- GLOBE, ANGLE VALVE
- GLOBE, FLANGED VALVE
- GLOBE, THREEWAY VALVE ARROWS INDICATE FLOW PATTERN
- NEEDLE VALVE
- PLUG VALVE
- PLUG, FLANGED VALVE
- PLUG, ECCENTRIC VALVE SEAT PORT
- PLUG, THREEWAY VALVE ARROWS INDICATE FLOW PATTERN
- FLOAT VALVE
- HOSE BIBB SCHEMATIC
- PINCH VALVE
- CIRCUIT SETTER BALANCING
- QUICK ACTION VALVE
- STOP CHECK
- TRIPLE DUTY VALVE
- ANGLE STOP CHECK
- PRESSURE RELIEF (PSV)
- RELIEF VALVE
- AIR VENT, AUTOMATIC
- AIR VENT, MANUAL
- PRESSURE REGULATING PRV, VALVE BODY FEED (REGULATED SIDE)
- PRESSURE REGULATING PRV, LINE FEED (REGULATED SIDE)
- DIAPHRAM OPERATED VALVE
- GAS PRESSURE REGULATING
- FLOW ORIFICE (PRESSURE REDUCING)
- RUPTURE DISC (PRESSURE RELIEF)
- REDUCED PRESSURE BACKFLOW PREVENTER
- CRYOGENIC VALVE
- OS&Y VALVE
- OS&Y VALVE, SUPERVISED

MISCELLANEOUS PIPING SYMBOLS

- CAM-LOC TYPE HOSE COUPLING
- TUBE COUPLING
- STRAINER, WYE
- STRAINER, BASKET
- PETE'S PLUG
- DIAPHRAGM SEAL
- SIGHT GLASS
- WAFER SIGHT GLASS
- GAUGE GLASS WITH COCK
- THERMOMETER
- GRAVITY FLOW DRAIN
- TAP FITTING
- SWITCH, FLOW
- SWITCH, PRESSURE
- FILTER REGULATOR LUBRICATOR
- FILTER
- BAG FILTER
- DUCT HEATER (1)
- PADDLE WHEEL FLOW METER
- VORTEX FLOW METER
- MAG FLOW METER
- ROTAMETER FLOW METER
- TURBINE FLOW METER (1)
- FLOW CONTROL VENTURI
- STEAM TRAP
- STEAM TRAP ASSEMBLY
- SAMPLE VALVE (SP-)
- STERILE SAMPLE PORT (SP-)
- RESIN TRAP
- FLEX PIPE
- PRESSURE/VACUUM RELIEF
- PULSATION DAMPNER (1)
- STATIC MIXER
- SSH-SAFETY SHOWER AND EYE WASH
- QUICK DISCONNECT COUPLING
- SURGE SUPRESSOR

ACTUATOR SYMBOLS

- PZ PNEUMATIC WITH POSITIONER
- PS PNEUMATIC WITH SOLENOID
- E ELECTRIC
- P PNEUMATIC
- SET @ 30 PSIG AIR SET WITH SET GAUGE PRESSURE
- M MOTORIZED
- S TWO-WAY SOLENOID VALVE
- S THREE-WAY SOLENOID VALVE
- M MOTORIZED DIAPHRAGM
- MOTORIZED BUTTERFLY
- T/S TRAVEL STOP

EQUIPMENT SYMBOLS

- CENTRIFUGAL PUMP
- SUBMERSIBLE PUMP
- METERING PUMP
- DIAPHRAGM PUMP
- POSITIVE DISPLACEMENT PUMP
- DRUM PUMP
- PLUG FAN
- MULTISTAGE CENTRIFUGAL PUMP
- VACUUM PUMP
- LIQUID RING PUMP
- SUMP PUMP
- MOTOR
- BLOWER

INTERFACE SYMBOLS

PROCESS

XXX / YYY — PIPING INTERFACE
A = INTERFACE I.D.
XXX = SOURCE SHEET NO.
YYY = DESTINATION SHEET NO.

SIGNAL

XXX / YYY — SIGNAL INTERFACE
A = INTERFACE I.D.
XXX = SOURCE SHEET NO.
YYY = DESTINATION SHEET NO.

B — LINE CONTINUATION
B = INTERFACE I.D.

INSTRUMENT IDENTIFICATION

SEE INSTRUMENT SOCIETY OF AMERICA TABLE (MODIFIED) FOR EXPLANATION OF TERMS

VENDOR SUPPLIED — DEVICE TYPE — DEVICE FUNCTION — ITEM

**OOA
AAA
BBBB-CCCC-DD

EQUIPMENT NUMBER PER LOOP
SYSTEM NUMBER (NOT ALWAYS SHOWN)

- FIELD MOUNTED DEVICE
- PANEL MOUNTED DEVICE
- DISCRETE LOGIC INTERLOCK
- CALCULATION/DECISIONS
- PROGRAMMABLE LOGIC CONTROLLER(PLC)/ COMPUTER

LINE LEGEND

- ANALOG SIGNAL (4 TO 20 mADC ETC.)
- DISCRETE SIGNAL (ON/OFF ETC.)
- DATA SIGNAL
- PULSED FREQUENCY
- PNEUMATIC SIGNAL
- FILLED SYSTEM SIGNAL
- HYDRAULIC SYSTEM SIGNAL
- SOFTWARE LINK SIGNAL
- ELECTRICAL POWER

GENERAL NOTES

A THIS IS A STANDARD LEGEND SHEET, THEREFORE, NOT ALL OF THE INFORMATION MAY BE USED ON THIS PROJECT.

B COMPONENTS AND PANELS SHOWN WITH A SINGLE ASTERISK (*) ARE PROVIDED AS PART OF A PACKAGE SYSTEM. VENDOR FURNISHED, CONTRACTOR TO INSTALL.

C COMPONENTS AND PANELS SHOWN WITH A DOUBLE ASTERISK (**) ARE PROVIDED AS PART OF A PACKAGE SYSTEM. VENDOR FURNISHED AND INSTALLED.

PIPING LINE TYPE DESIGNATION

- DOUBLE CONTAINMENT PIPING
- INSULATED PIPING
- FLEXIBLE PIPE,HOSE
- HEAT TRACED PIPE

PIPING DESIGNATION

EXAMPLE: 3/4-UPWS-RDT-000

- LINE NUMBER
- LINE CLASS DESIGNATION
- FLOW STREAM IDENTIFICATION
- NOMINAL PIPE DIAMETER IN INCHES

TRANSDUCERS

A	ANALOG
D	DIGITAL
E	VOLTAGE
F	FREQUENCY
I	CURRENT
P	PNEUMATIC
PF	PULSE FREQUENCY
PD	PULSE DURATION

EXAMPLE: I/P — CURRENT TO PNEUMATIC CONVERTER

(4) PARALLELING LINES, (PARENTHETICAL NUMBER) INDICATES THE NUMBER OF SIGNALS REPRESENTED

CONNECTING LINES

NON-CONNECTING LINES

ROBERT JOHN SUHREIBER — STATE OF WASHINGTON — REGISTERED PROFESSIONAL ENGINEER

Released for Bid 7/16/12

PermaFix® environmental services
A Nuclear Services and Waste Management Company

REV NO	RR	MF	QA BY / DATE	ENGR BY / DATE	CHK BY / DATE	REV BY / DATE	DESCRIPTION
1						SDN 7/23/14	PERMIT MODIFICATION REQUEST 135
0				JM	PEB	2/16/98	ISSUE FOR TSCA/RCRA PERMIT APPLICATION

REVISIONS

EDWARD CONSULTING ENGINEERS, INC.
20565 SW T.V. HWY #355 ALOHA, OREGON 97006
(503) 642-1999, FAX 649-6139

DRAWING NO | DRAWING TITLE
REFERENCE DRAWINGS
NEXT HIGHER ASSEMBLY:

CADCODE ACADR13 | CADFILE 97211

DRAWN MKB | DATE
CHECKED
DFTG APVD
ENGR JM
APVD
OTHER
QA
APPROVED FOR IMPLEMENTATION
BY
FOR DATE

MIXED WASTE FACILITY
STABILIZATION BUILDING 13
(MWNT) & (MWTH)

PIPING AND INSTRUMENTATION DIAGRAM LEGEND

SCALE NONE | SHEET NO 1 | SHEETS 3

DWG NO 31001-P-010-01 | REV 1

PERMIT FIGURE NUMBER: NONE

Copy
Review & Recycle

LINE CLASS DESIGNATION

K E A E

PIPE MATERIAL		PRESSURE		JOINT OR SERVICE		SERVICE	
FIRST LETTER		SECOND LETTER		THIRD LETTER		OPTIONAL FOURTH LETTER	
SYMBOL	PIPE MATERIAL	SYMBOL	MATERIAL RATED PRESSURE (PSIG)	SYMBOL	JOINT OR SERVICE	SYMBOL	SERVICE
A	A-53F/A-53B BLK, STEEL A-134,AWWA C200	A	ATM	A	WELDED	A	
B	A-53F GALV/A-53B BLK, 2-1/2 FLG, STEEL	B	50	B	THREADED	B	
C	A-53F GALV/A-53B BLK, 5 FLG STEEL	C	100	C	SOLDERED	C	
D	A-106B SCH 40/A-53B, STEEL	D	125	D	BRAZED	D	DOUBLE CONTAINMENT
E	A-106B SCH 80/A-53B, STEEL	E	150	E	COMPRESSION	E	
F	A-106B/A-53B ALL SCH 80 STEEL	F	300	F	HUB	F	
G	A-333, STEEL	G	600	G	FUSEAL	G	
H	A-199, 1 1/4 CR, 1/2 MO, STEEL	H	900	H	SOLVENT CEMENT	H	CAUSTIC
I	COPPER	I	15	I	SEAL WELD	I	
J	304L, STAINLESS	J	175	J	JACKETED	J	
K	316L, STAINLESS	K	6000	K	NO COPPER	K	SPLIT FITTING
L	FRP			L	BLOWDOWN	L	CLEAR PVC
M	POLYETHYLENE			M	FLANGED	M	
N	POLYPROPYLENE			N	COAXIAL	N	COAXIAL
O	PVC, SCH 40			O	FM APPROVED	O	
P	PVC, SCH 80			P	GROOVED END	P	
Q	CPVC			Q	SANITARY		
R	PVDF			R	UL APPROVED		
S	TFE LINED			S		S	STEAM
T	FEP LINED					T	PASSIVATED, CLEANED, WELDS GROUND
U	PVDF LINED			U	CONTAINMENT		
V	DUCTILE IRON			V	NO HUB	V	NATURAL GAS
W	CRYOGENIC			W	FUSION WELDED	W	EXTRA CORROSION ALLOWANCE
X	POLYPROPYLENE LINED			X	ORBITAL WELDED	X	FRP REINFORCED
Y	SARAN LINED			Y	SHRINKABLE SLEEVE		
Z	A-106B SCH 80			Z	TUBING		
1	POLYBUTYLENE						
2	ABS						
3	CAST IRON						
4	CARBON STEEL TUBING						
5	CLAY						
6	RUBBER HOSE						
7	CONCRETE						
8	304						
9	PFA						

INSTRUMENT SOCIETY OF AMERICA TABLE
(MODIFIED)

	FIRST LETTER(S)		SUCCEEDING LETTERS		
	PROCESS OR INITIATING VARIABLE	MODIFIER	READOUT OR PASSIVE FUNCTION	OUTPUT FUNCTION	MODIFIER
A	ANALYSIS		ALARM		
B	BURNER FLAME		USERS CHOICE(*)	USERS CHOICE(*)	USERS CHOICE(*)
C	CONDUCTIVITY			CONTROL	CLOSE
D	DENSITY (S.G.)	DIFFERENTIAL			
E	VOLTAGE		PRIMARY ELEMENT		
F	FLOW RATE	RATIO			
G	GAUGE		GLASS		
H	HAND (MANUAL)				HIGH
I	CURRENT		INDICATE		OPEN
J	POWER	SCAN			
K	TIME OR SCHEDULE			CONTROL STATION	
L	LEVEL		LIGHT (PILOT)		LOW
M	MOTION				MEDIUM
N	USERS CHOICE(*)		USERS CHOICE(*)	USERS CHOICE(*)	USERS CHOICE(*)
O	USERS CHOICE(*)		ORIFICE		
P	PRESSURE (OR VACUUM)		POINT(TEST CONNECTION)		
Q	QUANTITY OR EVENT(*)	INTEGRATE	INTEGRATE		
R			RECORD OR PRINT		
S	SPEED OR FREQUENCY	SAFETY		SWITCH	
T	TEMPERATURE			TRANSMIT	
U	MULTIVARIABLE(*)		MULTIFUNCTION(*)		
V	VIBRATION			VALVE, DAMPER	
W	WEIGHT OR FORCE		WELL		
X	UNCLASSIFIED(*)		UNCLASSIFIED(*)	UNCLASSIFIED(*)	UNCLASSIFIED(*)
Y	EVENT OR SEQUENCE			COMPUTE(*) OR TRANSDUCE	
Z	POSITION			DRIVE, ACTUATE OR UNCLASSIFIED FINAL CONTROL ELEMENT	

(*) WHEN USED, EXPLANATION IS SHOWN ADJACENT TO INSTRUMENT SYMBOL. SEE ABBREVIATIONS AND LETTER SYMBOLS.

LETTER SYMBOLS DEVICE FUNCTION &

AC	ALTERNATING CURRENT
ALT	ALTERNATING
AM	AUTO-MANUAL
AWFCO	AUTOMATIC WASTE FEED CUTOFF
C	CLOSED
CCS	CENTRAL CONTROL SYSTEM
Cl_2	CHLORINE (TYPICAL: USE STANDARD CHEMICAL FORMULA ABBREVIATION)
CM	COMPUTER MANUAL
COND	CONDUCTIVITY
PLC	PLC PANEL
DC	DIRECT CURRENT
DDC	DIRECT DRIVE CONTROL
ETM	ELAPSED TIME MONITOR
FAIL	FAIL ALARM
FC	FAIL CLOSED
FO	FAIL OPEN
FOS	FAST-OFF-SLOW
FOSA	FAST-OFF-SLOW-AUTO
FOSR	FAST-OFF-SLOW-REMOTE
FR	FORWARD REVERSE
HOA	HAND-OFF-AUTO
HOR	HAND-OFF-REMOTE
I	CURRENT
LEAD	LEAD SELECTION
LEL	LOWER EXPLOSIVE LIMIT
LOS	LOCKOUT STOP
LCP	LOCAL CONTROL PANEL
LR	LOCAL-REMOTE
MCC-X	MOTOR CONTROL CENTER NO. X
NC	NORMALY CLOSED
NO	NORMALY OPEN
OC	OPEN-CLOSE(D)
OCA	OPEN-CLOSE-AUTO
O	OPEN
OO	ON-OFF
OOA	ON-OFF-AUTO
OOR	ON-OFF-REMOTE
ORP	OXIDATION REDUCTION POTENTIAL
OSC	OPEN-STOP-CLOSE
PART	PARTICLES
PCF	PROGRAMMABLE CONTROLLER FUNCTION
PCS	PROGRAMMABLE CONTROLLER SYSTEM
PLC	PROGRAMMABLE LOGIC CONTROLLER
pH	– LOG (H+ CONCENTRATION)
RES	RESISTIVITY
RM-X	REMOTE MULTIPLEXING MODULE NO. X
SF	SLOWER-FASTER
SiO2	SILICA
STBY	STANDBY SELECTION
SS	START-STOP
SSC	SUPERVISORY SET POINT CONTROL
THC	TOTAL HYDROCARBONS
TOC	TOTAL ORGANIC CARBON
VHC	VOLATILE HYDROCARBONS
VIB	VIBRATION
W	UNIT PROCESS No.
WFCO	WASTE FEED CUTOFF
X	PANEL No.
Δ	DIFFERENCE
Σ	SUM
X	MULTIPLY
÷	DIVIDE
(x)	CHARACTERIZED
X^n	RAISED TO THE Nth POWER
$\sqrt{\ }$	SQUARE ROOT
AVG	AVERAGE
↑	REPEAT OR BOOST
>	SELECT HIGHEST SIGNAL
<	SELECT LOWEST SIGNAL

DEVICE TYPE ABBREVIATION LIST

CODE	SUBCODE	USE	DESCRIPTION
AA			ANALYTICAL ALARM
	AALL		ANALYTICAL ALARM LOW LOW
	AAL		ANALYTICAL ALARM LOW
	AAH		ANALYTICAL ALARM HIGH
	AAHH		ANALYTICAL ALARM HIGH HIGH
AE			ANALYTICAL ELEMENT
		pH	pH ELEMENT
		DP	DEW POINT ELEMENT
		PART	PARTICLE ELEMENT
		THC	THC ELEMENT
		ORP	ORP ELEMENT
		TOC	TOC ELEMENT
		OZONE	OZONE ELEMENT
		OXYGEN	OXYGEN ELEMENT
		CHLORINE	CHLORINE ELEMENT
AET			ANALYTICAL ELEMENT TRANSMITTER
AI			ANALYTICAL INDICATOR
		pH	pH INDICATOR
		DP	DEW POINT INDICATOR
		UV	UV INDICATOR
		PART	PARTICLE INDICATOR
		SILICA	SILICA INDICATOR
		TOC	TOC INDICATOR
		OZONE	OZONE INDICATOR
		OXYGEN	OXYGEN INDICATOR
		SODIUM	SODIUM INDICATOR
AC			ANALYTICAL CONTROLLER
AIC			ANALYTICAL INDICATING CONTROLLER
AT			ANALYTICAL TRANSMITTER
AIT			ANALYTICAL INDICATING TRANSMITTER
ACV			ANALYTICAL CONTROL VALVE
BCS			BAR CODE SCANNER
BCI			BAR CODE INDICATOR
CA			CONDUCTIVITY ALARM
CE			CONDUCTIVITY ELEMENT
CI			CONDUCTIVITY INDICATOR
CIC			CONDUCTIVITY INDICATING CONTROLLER
CC			CONDUCTIVITY CONTROLLER
CLS			CONDUCTIVITY LEVEL SENSOR
CIT			CONDUCTIVITY INDICATING TRANSMITTER
CT			CONDUCTIVITY TRANSMITTER
EI			VOLTAGE INDICATOR
EA			VOLTAGE ALARM
	EALL		VOLTAGE ALARM LOW LOW
	EAL		VOLTAGE ALARM LOW
	EAH		VOLTAGE ALARM HIGH
	EAHH		VOLTAGE ALARM HIGH HIGH
ES			VOLTAGE SWITCH
	ESLL		VOLTAGE SWITCH LOW LOW
	ESL		VOLTAGE SWITCH LOW
	ESH		VOLTAGE SWITCH HIGH
	ESHH		VOLTAGE SWITCH HIGH HIGH
ET			VOLTAGE TRANSMITTER
FA			FLOW ALARM
	FALL		FLOW ALARM LOW LOW
	FAL		FLOW ALARM LOW
	FAH		FLOW ALARM HIGH
	FAHH		FLOW ALARM HIGH HIGH
FC			FLOW CONTROLLER (STAND ALONE)
FIC			FLOW INDICATING CONTROLLER
FCV			FLOW CONTROL VALVE
FE			FLOW ELEMENT
FET			FLOW ELEMENT/TRANSMITTER
FI			FLOW INDICATOR
FIT			FLOW INDICATING TRANSMITTER
FQ			FLOW TOTALIZER
FQA			FLOW TOTALIZER ALARM
FQI			FLOW TOTALIZER INDICATOR
FR			FLOW RECORDER
FS			FLOW SWITCH
	FSLL		FLOW SWITCH LOW LOW
	FSL		FLOW SWITCH LOW
	FSH		FLOW SWITCH HIGH
	FSHH		FLOW SWITCH HIGH HIGH
FT			FLOW TRANSMITTER
FV			FLOW VALVE
FY			FLOW SIGNAL CONVERTER
GM			BETA-GAMMA MONITOR
HK			MANUAL VARIABLE CONTROL
HS			HAND SWITCH
HSI			HAND SWITCH POSITION INDICATOR

CODE	SUBCODE	USE	DESCRIPTION
II			CURRENT INDICATOR
IA			CURRENT ALARM
	IALL		CURRENT ALARM LOW LOW
	IAL		CURRENT ALARM LOW
	IAH		CURRENT ALARM HIGH
	IAHH		CURRENT ALARM HIGH HIGH
IS			CURRENT SWITCH
	ISLL		CURRENT SWITCH LOW LOW
	ISL		CURRENT SWITCH LOW
	ISH		CURRENT SWITCH HIGH
	ISHH		CURRENT SWITCH HIGH HIGH
IT			CURRENT TRANSMITTER
IY			CURRENT SIGNAL CONVERTER
JAT			POWER INDICATING TRANSMITTER
JY			POWER SIGNAL CONVERTER
KI			TIMER/COUNTER (DERIVED)
KY			TIMER/COUNTER (FIELD DEVICES)
LA			LEVEL ALARM
	LALL		LEVEL ALARM LOW LOW
	LAL		LEVEL ALARM LOW
	LAH		LEVEL ALARM HIGH
	LAHH		LEVEL ALARM HIGH HIGH
LC			LEVEL CONTROLLER (STAND ALONE)
LCV			LEVEL CONTROL VALVE
LE			LEVEL ELEMENT
LI			LEVEL INDICATOR
LIC			LEVEL INDICATING CONTROLLER
LIT			LEVEL INDICATING TRANSMITTER
LS			LEVEL SWITCH
	LSLL		LEVEL SWITCH LOW LOW
	LSL		LEVEL SWITCH LOW
	LSH		LEVEL SWITCH HIGH
	LSHH		LEVEL SWITCH HIGH HIGH
LT			LEVEL TRANSMITTER
LY			LEVEL SIGNAL CONVERTER
MV			MANUAL HAND VALVE
NA			HUMIDITY ALARM
	NALL		HUMIDITY ALARM LOW LOW
	NAL		HUMIDITY ALARM LOW
	NAH		HUMIDITY ALARM HIGH
	NAHH		HUMIDITY ALARM HIGH HIGH
NC			HUMIDITY CONTROLLER
NCV			HUMIDITY CONTROL VALVE
NE			HUMIDITY ELEMENT
NET			HUMIDITY ELEMENT/TRANSMITTER
NI			HUMIDITY INDICATOR
NIC			HUMIDITY INDICATING CONTROLLER
NY			HUMIDITY SIGNAL CONVERTER
PA			PRESSURE ALARM
	PALL		PRESSURE ALARM LOW LOW
	PAL		PRESSURE ALARM LOW
	PAH		PRESSURE ALARM HIGH
	PAHH		PRESSURE ALARM HIGH HIGH
PC			PRESSURE CONTROLLER
PCV			PRESSURE CONTROL VALVE
PCD			PRESSURE CONTROL DAMPER
PD			PNEUMATIC DAMPER ACTUATOR
PDC			PRESSURE DIFFERENTIAL CONTROLLER
PDI			PRESSURE DIFFERENTIAL INDICATOR
PDS			PRESSURE DIFFERENTIAL SWITCH
PDT			PRESSURE DIFFERENTIAL TRANSMITTER
PDZ			DAMPER POSITIONER
PI			PRESSURE INDICATOR
PIC			PRESSURE INDICATING CONTROLLER
PIS			PRESSURE INDICATING SWITCH
PIT			PRESSURE INDICATING TRANSMITTER
PRV			PRESSURE REDUCING VALVE
PS			PRESSURE SWITCH
	PSLL		PRESSURE SWITCH LOW LOW
	PSL		PRESSURE SWITCH LOW
	PSH		PRESSURE SWITCH HIGH
	PSHH		PRESSURE SWITCH HIGH HIGH
PSS			PRESSURE SAFETY SWITCH
PSV			PRESSURE SAFETY VALVE
PT			PRESSURE TRANSMITTER
PV			PRESSURE VALVE
PY			PRESSURE SIGNAL CONVERTER
QA			FAULT INDICATION (DERIVED)
QE			RUPTURE DISK
QI			STATUS INDICATOR (DERIVED)
QL			STATUS INDICATOR (FIELD)
QS			FAULT CONTACT

CODE	SUBCODE	USE	DESCRIPTION
RA			RESISTIVITY ALARM
	RALL		RESISTIVITY ALARM LOW LOW
	RAL		RESISTIVITY ALARM LOW
	RAH		RESISTIVITY ALARM HIGH
	RAHH		RESISTIVITY ALARM HIGH HIGH
RE			RESISTIVITY ELEMENT
RET			RESISTIVITY ELEMENT TRANSMITTER
RI			RESISTIVITY INDICATOR
	RILL		RESISTIVITY INDICATOR LOW LOW
	RIL		RESISTIVITY INDICATOR LOW
	RIH		RESISTIVITY INDICATOR HIGH
	RIHH		RESISTIVITY INDICATOR HIGH HIGH
RIT			RESISTIVITY INDICATING TRANSMITTER
RCV			RESISTIVITY CONTROL VALVE
RY			RESISTIVITY SIGNAL CONVERTER
SC			SPEED CONTROL
SCM			SPEED CONTROL MANUAL
SI			SPEED INDICATOR
	SIC		SPEED INDICATING CONTROLLER
TA			TEMPERATURE ALARM
	TALL		TEMPERATURE ALARM LOW LOW
	TAL		TEMPERATURE ALARM LOW
	TAH		TEMPERATURE ALARM HIGH
	TAHH		TEMPERATURE ALARM HIGH HIGH
TC			TEMPERATURE CONTROLLER (STAND ALONE)
TCD			TEMPERATURE CONTROL DAMPER
TCS			TEMPERATURE CONTROLLED SWITCH
TCV			TEMPERATURE CONTROL VALVE
TE			TEMPERATURE ELEMENT
TET			TEMPERATURE/ELEMENT TRANSMITTER
TI			TEMPERATURE INDICATOR
TIT			TEMPERATURE INDICATING TRANSMITTER
TIC			TEMPERATURE INDICATING CONTROLLER
TR			TEMPERATURE RECORDER
TS			TEMPERATURE SWITCH
	TSLL		TEMPERATURE SWITCH LOW LOW
	TSL		TEMPERATURE SWITCH LOW
	TSH		TEMPERATURE SWITCH HIGH
	TSHH		TEMPERATURE SWITCH HIGH HIGH
TT			TEMPERATURE TRANSMITTER
TV			TEMPERATURE VALVE
TY			TEMPERATURE SIGNAL CONVERTER
VA			VIBRATION ALARM
VS			VIBRATION SWITCH
XV			SOLENOID VALVE
YAR			ALARM EVENT RECORDER
YD			DAMPER
YDC			DAMPER CONTROL
YK			EVENT TIMER
YR			EVENT RECORDER
YS			SMOKE DETECTOR
ZA			POSITION ALARM
ZC			POSITION CONTROLLER
ZI			POSITION INDICATOR
	ZIO		POSITION INDICATOR OPEN
	ZIC		POSITION INDICATOR CLOSED
ZS			POSITION SWITCH
	ZSO		POSITION SWITCH OPEN
	ZSC		POSITION SWITCH CLOSED
ZX			POSITION LOCK

ROBERT JOHN SCHREIBER
STATE OF WASHINGTON
REGISTERED
PROFESSIONAL ENGINEER

REV	DATE	BY	QA	DATE	DESCRIPTION
1	7/21/14				PERMIT MODIFICATION REQUEST 135
0	2/16/98				ISSUE FOR TSCA/RCRA PERMIT APPLICATION

REVISION

PermaFix®
environmental services
A Nuclear Services and Waste Management Company

DATE	
DRAWN	
CHECKED	
DFTG APVD	
ENGR	
APVD	
OTHER	
QA	

APPVD FOR IMPLEMENTATION
BY_____
FOR DATE

MIXED WASTE FACILITY
BUILDING 13

PIPING AND
INSTRUMENTATION DIAGRAM
LEGEND

SCALE: NONE | SHEET NO. 2
DWG. NO. 31001-P-010-02 | REV 0

Copy
Review & Recycle

FLOW STREAM IDENTIFICATION

AS	REVERSE OSMOSIS, ANTI SCALANT
AW	ACID WASTEWATER
BA	BREATHING AIR
BBD	BOILER BLOWDOWN
BCE	BUILDING CONFINEMENT EXHAUST
BE	BOILER EXHAUST
CD	CONDENSATE DRAIN
CF	CHEMICAL FEED WATER TREATMENT
CHWR	CHILLED WATER RETURN
CHWS	CHILLED WATER SUPPLY
CO	CARBON MONOXIDE
CO2	CARBON DIOXIDE
CS	CAUSTIC SUPPLY
CW	CITY WATER POTABLE
D	DRAIN
ECW	EQUIPMENT COOLING WATER
EOG	EMERGENCY OFF GAS
FP	FIRE PROTECTION ABOVE GROUND
GCRH	GRAVITY CONDENSATE RETURN (STEAM)
GE	GENERAL EXHAUST
GS	GAS SAMPLING
HE	HELIUM
HPS	HIGH PRESSURE STEAM
HPSV	HIGH PRESSURE STEAM VENT
HW	DOMESTIC HOT WATER
H2	HYDROGEN
IA	INSTRUMENT AIR
IW	INDUSTRIAL WATER
LPS	LOW PRESSURE STEAM
LPSV	LOW PRESSURE STEAM VENT
LN2	LIQUID NITROGEN
LR	REAGENTS
LW	LIQUID WASTE
NaOH	SODIUM HYDROXIDE
N2	NITROGEN
O2	OXYGEN
PCR	PUMPED CONDENSATE RETURN
PCWR	PROCESS COOLING WATER RETURN
PCWS	PROCESS COOLING WATER SUPPLY
POG	PROCESS OFF-GAS
PV	PROCESS VENT
PW	PROCESS WATER
SA	SERVICE AIR
SAN	DRAIN, SANITARY SEWER
SB	SCRUBBER BOTTOMS LIQUID
SCH	STEAM CONDENSATE (HIGH P)
SCL	STEAM CONDENSATE (LOW P)
SS	STORM SEWER
SYN	SYNGAS
V	VENT
VOC	SOLVENT EXHAUST

EQUIPMENT ABBREVIATIONS

CODE	DESCRIPTION
ABB	ABBRASIVE BLAST BOOTH
A	ASSEMBLY
AC	ACTIVATED CARBON FILTER
ACU	AIR CONDITIONING UNIT
AHU	AIR HANDLING UNIT
AL	AIRLOCK
AS	AIR SEPARATOR
BA	BREATHING AIR
BDD	BACK DRAFT DAMPER
BLO	BLOWER
BLR	BOILER
C	CONTAINER
CA	CARBON ABSORPTION UNIT
CAM	CONTINUOUS AIR MONITOR
CC	COOLING COIL
CG	CHARGE GATE
CH	CHILLER
CLT	CONTROLLER
CMP	COMPRESSOR
CPR	COMPACTOR
CRN	CRANE
CRU	CONDENSATE RETURN UNIT
CSH	CRUSHER
CU	CONDENSATE UNIT
CV	CONVEYOR
CYL	GAS CYLINDERS
D	DOOR
DC	DUST COLLECTOR
DR	DRYER
E	ELEVATOR
EC	EVAPORATIVE COOLING
EFU	EXHAUST FAN UNIT
EPO	EMERGENCY POWER OFF
FA	FLAME ARRESTOR
FC	FAN COIL UNIT
F	FEEDER
FL	CARTRIDGE OR BAG FILTER
FLT	FILTER
FN	FAN
GA	GAS ANALYZER
GEN	GENERATOR
H	HOPPER
HC	HEAT COIL
HT	HEATER
HX	HEAT EXCHANGER
J	ISOLATION WATER SEAL
JB	JUNCTION BOX
LCP	LOCAL CONTROL PANEL
MAG	MAGNET
MC	METAL SAW
ME	MIST ELIMINATOR
MOT	MOTOR
MP	METERING PUMP
MSC	MISCELLANEOUS
MX	MIXER
PLC	PROGRAMMABLE LOGIC CONTROLLER
PMP	PUMP
PS	POWER SUPPLY
PT	PLASMA TORCH
Q	QUENCH
RO	REVERSE OSMOSIS UNIT
S	STACK
SC	SCRUBBER
SCR	SILICON CONTROLLED RECTIFIER
SEP	SEPARATOR
SER	SHEAR TABLE
SG	STEAM GENERATOR
SHR	SHREDDER
SIL	SILO
SR	SCREEN
ST	STRAINER
T	TABLE
TIC	TRANSPORTABLE IN-PROCESS CONTAINER
TK	TANK
UPS	UNINTERRUPTABLE POWER SUPPLY
VFD	VARIABLE FREQUENCY DRIVE
VS	VESSEL
XT	TRANSFORMER
Y	PROCESS CHAMBER
Z	MISCELLANIOUS EQUIPMENT

ROBERT JOHN SCHREIBER
STATE OF WASHINGTON
7/14
38740
REGISTERED
PROFESSIONAL ENGINEER

REV	DATE	BY	QA	DATE	DESCRIPTION
1	7/14/14	SDN			PERMIT MODIFICATION REQUEST 135
	2/16/98				ISSUE FOR TSCA/RCRA PERMIT APPLICATION

REVISION

PermaFix®
environmental services
A Nuclear Services and Waste Management Company

DATE	2/11/98
DRAWN	MKB
CHECKED	
DFTG APVD	
ENGR	
APVD	
OTHER	
QA	
APPV'D FOR IMPLEMENTATION BY. FOR DATE	

MIXED WASTE FACILITY
BUILDING 13

PIPING AND
INSTRUMENTATION DIAGRAM
LEGEND

SCALE: AS SHOWN | SHEET NO. 3 OF 3

31001-P-010-03 | REV 1

Copy
Review & Recycle

NOTE:
1. ALL ID NUMBERS SHOWN ON THIS SHEET HAVE A PREFIX OF TP-03, UNLESS NOTED OTHERWISE.

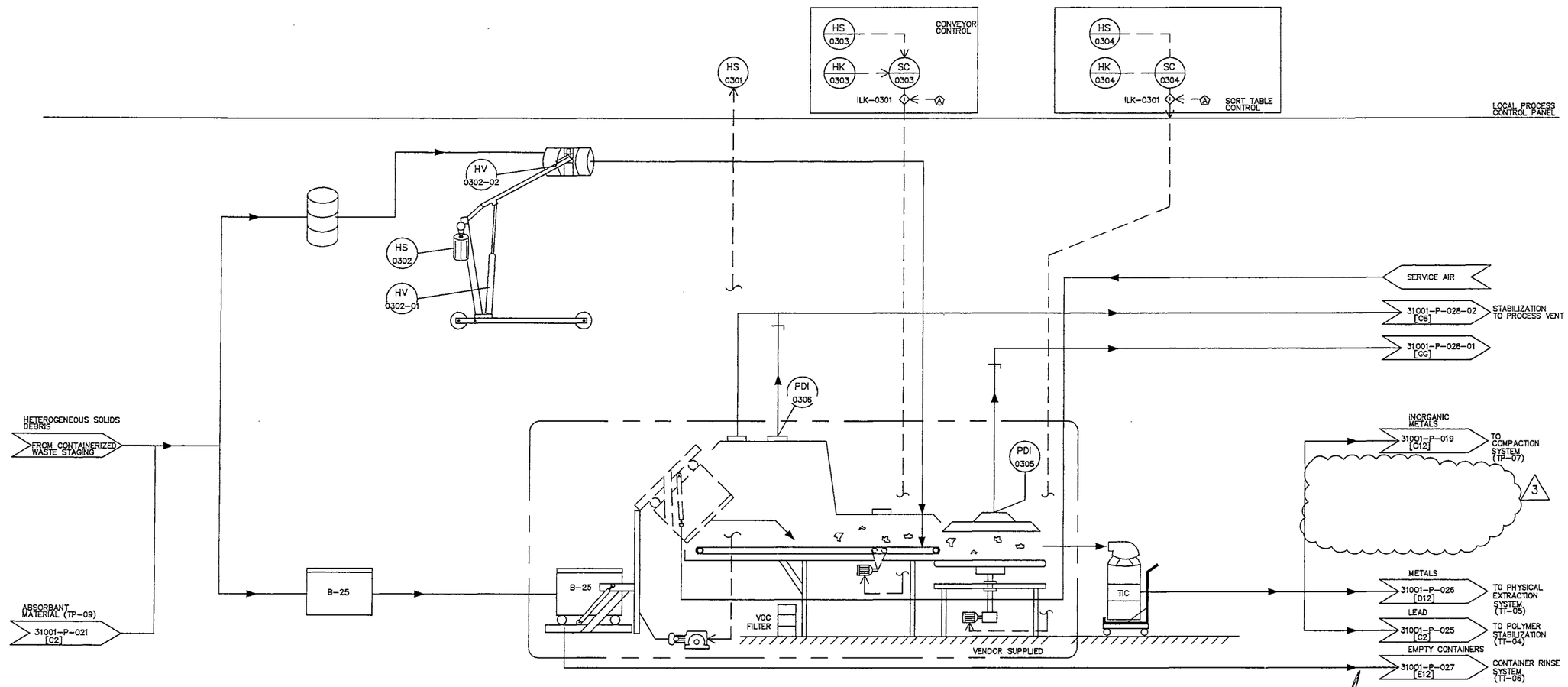

TRANSPORTABLE IN-PROCESS CONTAINER

DRUM DUMPER (E-0302)

BIN DUMPER (E-0301)

FEED CONVEYOR (CV-0303)

SORT TABLE VENT HOOD (Z-0305)

ROTATING SORT TABLE (Z-0304)

TRANSPORTABLE IN-PROCESS CONTAINER (TYP. OF 4) (C-0307)

DUMP AREA VENT HOOD (Z-0306)

FEED CONVEYOR VENT HOOD (Z-0308)

LINE CONTINUATION TABLE

	DESCRIPTION (FROM)		DESCRIPTION (TO)	
A	HS-0306-01	SORT TABLE E-STOP	SC-0303	DUMPER CONTROL
	HS-0306-02	DUMPER E-STOP	SC-0304	SORT TABLE CONTROL

ROBERT JOHN SCHREIBER
STATE OF WASHINGTON
38720
REGISTERED PROFESSIONAL ENGINEER

PermaFix®
environmental services
A Nuclear Services and Waste Management Company

DATE	6/05/14
DRAWN	SDN
CHECKED	
DFTG APVD	
ENGR	
APVD	
OTHER	
QA	
APPVD FOR IMPLEMENTATION BY	
FOR DATE	

MIXED WASTE FACILITY
STABILIZATION BLDG.

PIPING AND INSTRUMENTATION DIAGRAM
SORTING SYSTEM (TP-03)

SCALE: NONE | SHEET NO. 1

31001-P-015 | REV 3

REV	DATE	BY	QA DATE	DESCRIPTION
3	6/05/14	SDN		PERMIT MODIFICATION REQUEST 135

REVISION

Copy
Review & Recycle

1. ALL ID NUMBERS SHOWN ON THIS SHEET HAVE A PREFIX OF TP-04, UNLESS NOTED OTHERWISE.
2. ALL LIQUID WASTE PIPING OUTSIDE DRIP PAN TO BE DOUBLE CONTAINMENT PIPING WITH LEAK DETECTION.

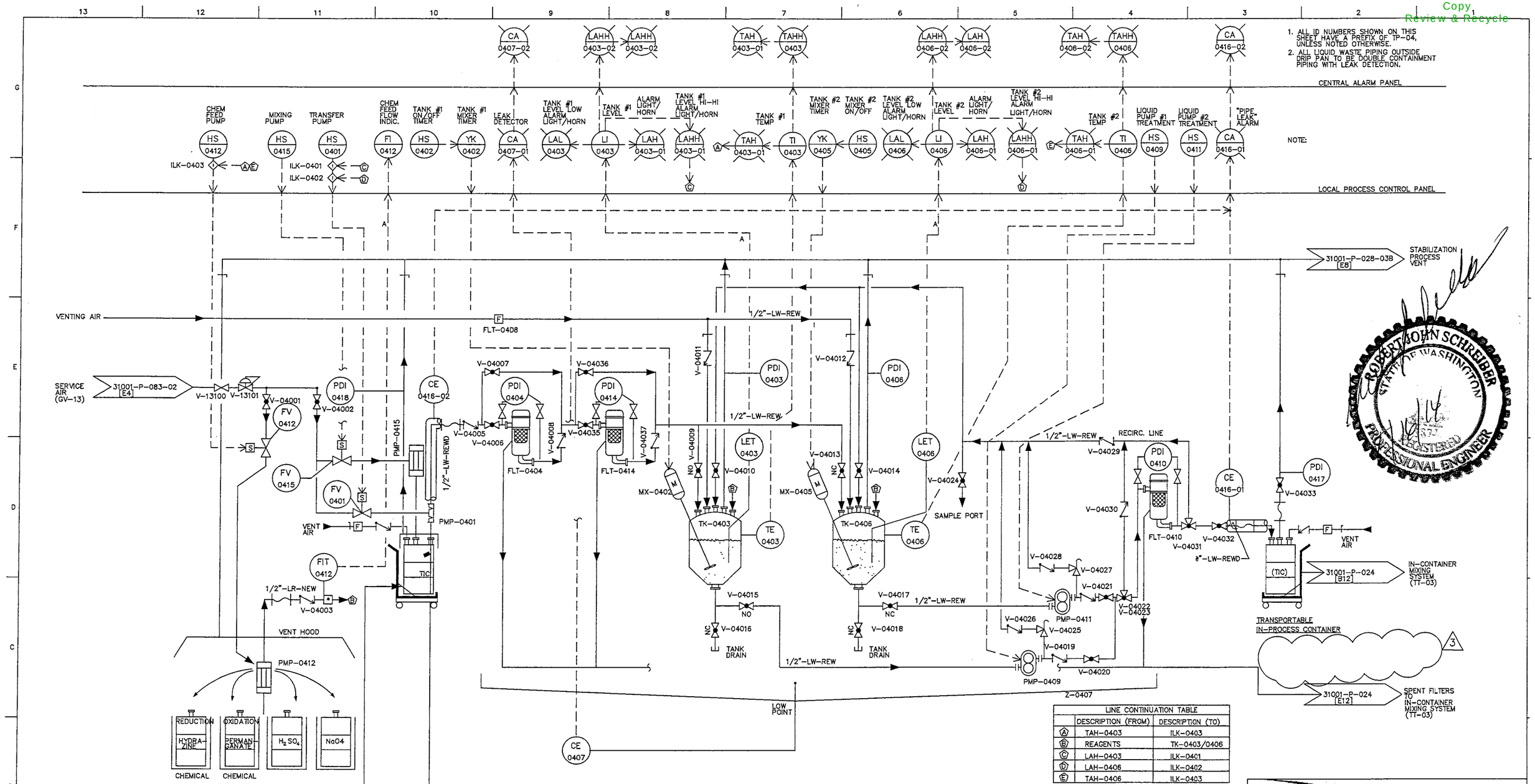

LINE CONTINUATION TABLE		
	DESCRIPTION (FROM)	DESCRIPTION (TO)
A	TAH-0403	ILK-0403
B	REAGENTS	TK-0403/0406
C	LAH-0403	ILK-0401
D	LAH-0406	ILK-0402
E	TAH-0406	ILK-0403

REV	DATE	BY	QA	DATE	DESCRIPTION
3	6/05/14	SDN			PERMIT MODIFICATION REQUEST 135

REVISION

PermaFix® environmental services
A Nuclear Services and Waste Management Company

DATE	
DRAWN	
CHECKED	
DFTG APVD	
ENGR	
APVD	
OTHER	
QA	
APPVD FOR IMPLEMENTATION BY	
FOR DATE	

MIXED WASTE FACILITY
BUILDING 13

PIPING AND INSTRUMENTATION DIAGRAM-LIQUID TREATMENT SYSTEM (TP-04)

SCALE: NONE | SHEET NO. 1

31001-P-016 | REV 3

Copy
Review & Recycle

NOTE:
1. ALL ID NUMBERS SHOWN ON THIS SHEET HAVE A PREFIX OF TP-06, UNLESS NOTED OTHERWISE.
2. ALL LIQUID WASTE PIPING OUTSIDE DRIP PAN TO BE DOUBLE CONTAINMENT PIPING WITH LEAK DETECTION.

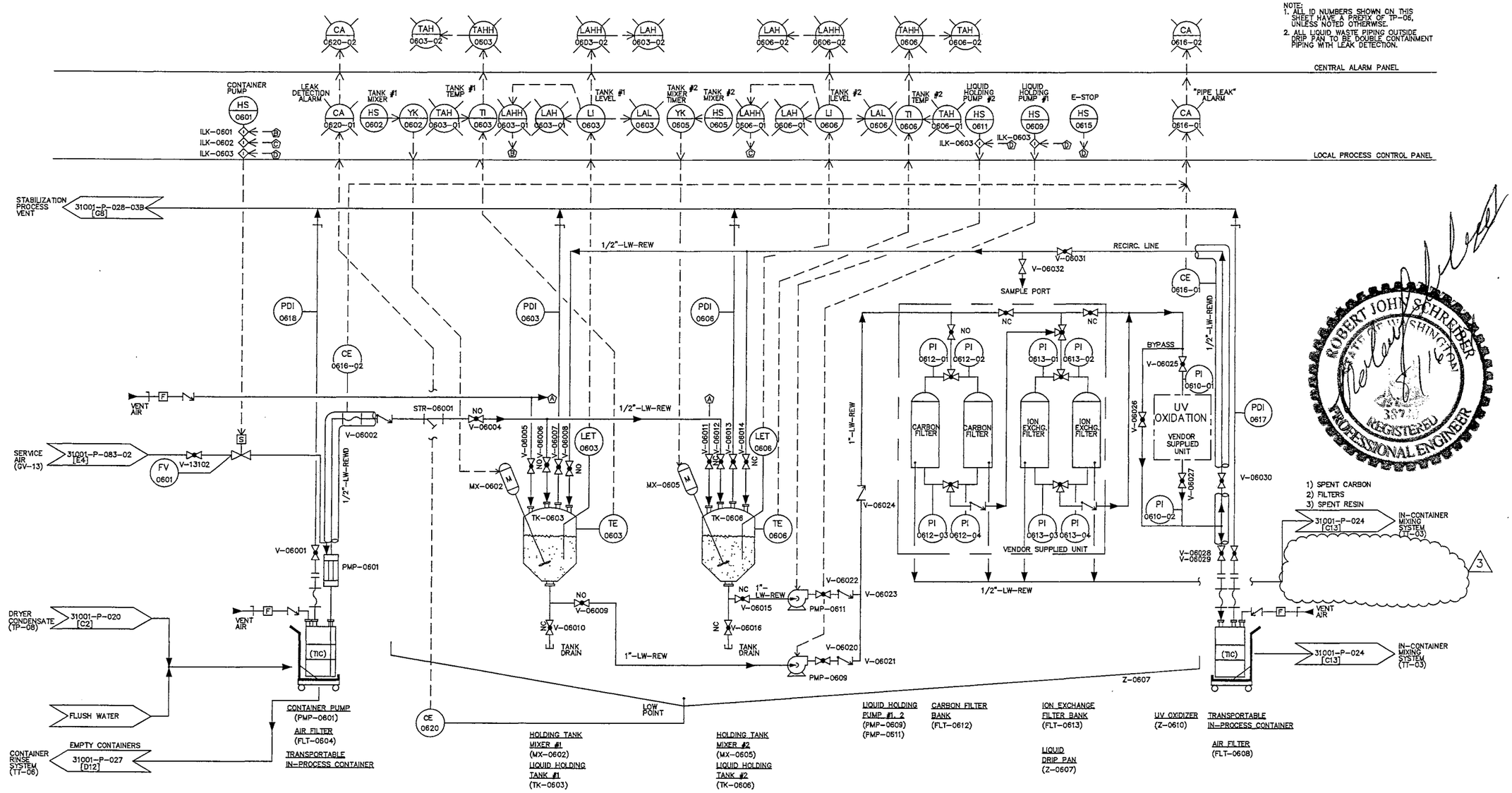

LINE CONTINUATION TABLE		
	DESCRIPTION (FROM)	DECRIPTION (TO)
A	VENT AIR	TK-0606
B	TANK 1 LEVEL HI HI LAHH-0603	HS-0601 CONTAINER PUMP
C	TANK 2 LEVEL HI HI LAHH-0606	HS-0601 CONTAINER PUMP
D	E-STOP HS-0615	HS-0601 HS-0609 HS-0611

REV	DATE	BY	QA	DATE	DESCRIPTION
3	6/05/14	SDN			PERMIT MODIFICATION REQUEST 135

REVISION

PermaFix® environmental services
A Nuclear Services and Waste Management Company

DATE	
DRAWN	
CHECKED	
DFTG APVD	
ENGR	
APVD	
OTHER	
QA	
APPVD FOR IMPLEMENTATION BY	
FOR	DATE

MIXED WASTE FACILITY
BUILDING 13

PIPING AND INSTRUMENTATION DIAGRAM
LIQUID HOLDING SYSTEM (TP-06)

SCALE: NONE | SHEET NO. 1
31001-P-018 | REV 3

Copy
Review & Recycle

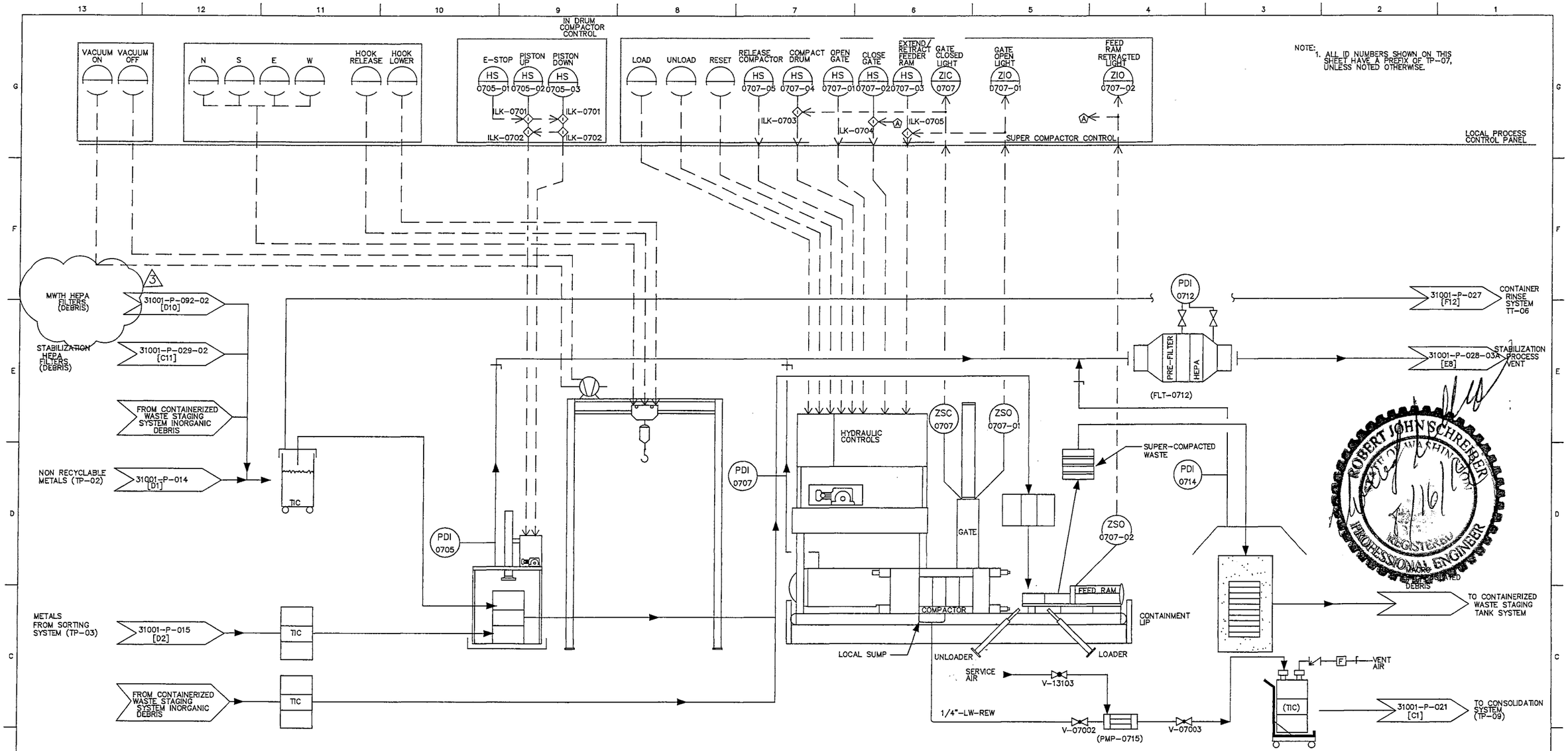

LINE CONTINUATION TABLE		
	DESCRIPTION (FROM)	DESCRIPTION (TO)
A	ZIC-0707-02 FEED RAM OPEN	HS-0707-02 GATE CLOSED

REV	DATE	BY	QA	DATE	DESCRIPTION
3	3/30/14	SDN			PERMIT MODIFICATION REQUEST 135
2	12/19/00	MP			AS-BUILT PER 31001-DCA-0026
1	2/16/98	EE			ISSUED FOR EPA PERMIT APPLICATION WITH EDITORIAL CHANGES

REVISION

PermaFix® environmental services
A Nuclear Services and Waste Management Company

DATE	
DRAWN	
CHECKED	
DFTG APVD	
ENGR	
APVD	
OTHER	
QA	
APPVD FOR IMPLEMENTATION BY	
FOR DATE	

MIXED WASTE FACILITY
BUILDING 13

PIPING AND INSTRUMENTATION DIAGRAM—COMPACTION/MACRO ENCAPSULATION SYS. (TP-07)

SCALE: NONE | SHEET NO. 1

31001-P-019 | REV 3

Copy
Review & Recycle

NOTE:
1. ALL ID NUMBERS SHOWN ON THIS SHEET HAVE A PREFIX OF TT-03, UNLESS NOTED OTHERWISE.

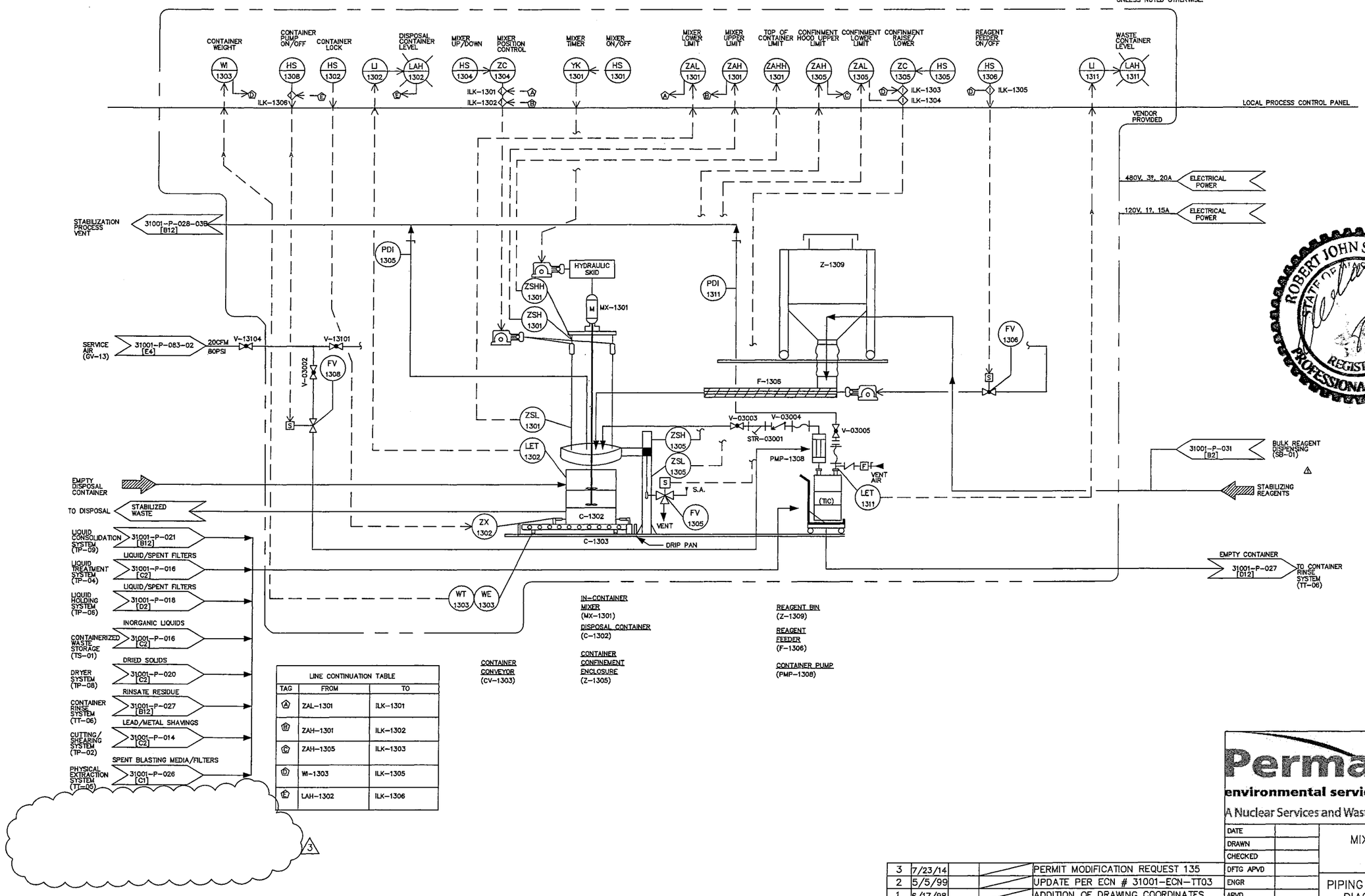

LINE CONTINUATION TABLE		
TAG	FROM	TO
A	ZAL-1301	ILK-1301
B	ZAH-1301	ILK-1302
C	ZAH-1305	ILK-1303
D	WI-1303	ILK-1305
E	LAH-1302	ILK-1306

REV	DATE	BY	QA	DATE	DESCRIPTION
3	7/23/14				PERMIT MODIFICATION REQUEST 135
2	5/5/99				UPDATE PER ECN # 31001-ECN-TT03
1	6/17/98				ADDITION OF DRAWING COORDINATES
					AND EDITORIAL CHANGES
0	2/16/98				ISSUE FOR EPA PERMIT APPLICATION

REVISION

PermaFix® environmental services
A Nuclear Services and Waste Management Company

DATE	
DRAWN	
CHECKED	
DFTG APVD	
ENGR	
APVD	
OTHER	
QA	
APPVD FOR IMPLEMENTATION BY. FOR DATE	

MIXED WASTE FACILITY
BUILDING 13

PIPING AND INSTRUMENTATION DIAGRAM-IN-CONTAINER MIXING SYSTEM (TT-03)

SCALE: NONE | SHEET NO. 1
DWG. NO. 31001-P-024 | REV 3

ROBERT JOHN SCHREIBER
STATE OF WASHINGTON
REGISTERED PROFESSIONAL ENGINEER

Copy
Review & Recycle

NOTE:
1. ALL ID NUMBERS SHOWN ON THIS SHEET HAVE A PREFIX OF TT-04, UNLESS NOTED OTHERWISE.

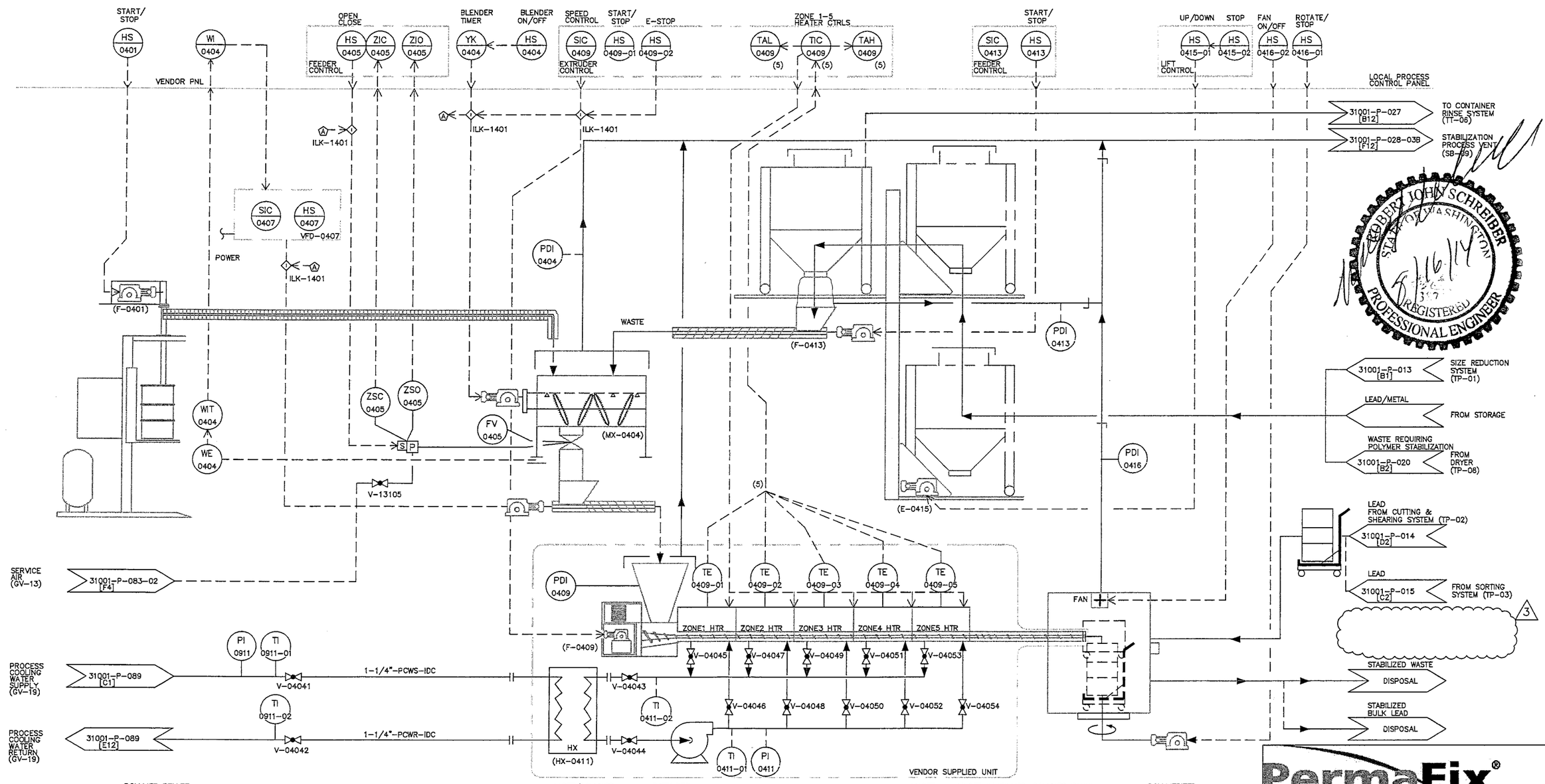

ROBERT JOHN SCHREIBER
STATE OF WASHINGTON
REGISTERED
PROFESSIONAL ENGINEER
5/16/14

PermaFix®
environmental services
A Nuclear Services and Waste Management Company

REV	DATE	BY	QA	DESCRIPTION
3	6/05/14	SDN		PERMIT MODIFICATION REQUEST 135

REVISION

DATE	6/05/14
DRAWN	SDN
CHECKED	
DFTG APVD	
ENGR	
APVD	
OTHER	
QA	
APPVD FOR IMPLEMENTATION BY. FOR DATE	

MIXED WASTE FACILITY
BUILDING 13

PIPING AND INSTRUMENTATION DIAGRAM-POLYMER MIXING SYSTEM (TT-04)

SCALE: NONE | SHEET NO. 1

31001-P-025 | REV 3

Copy
Review & Recycle

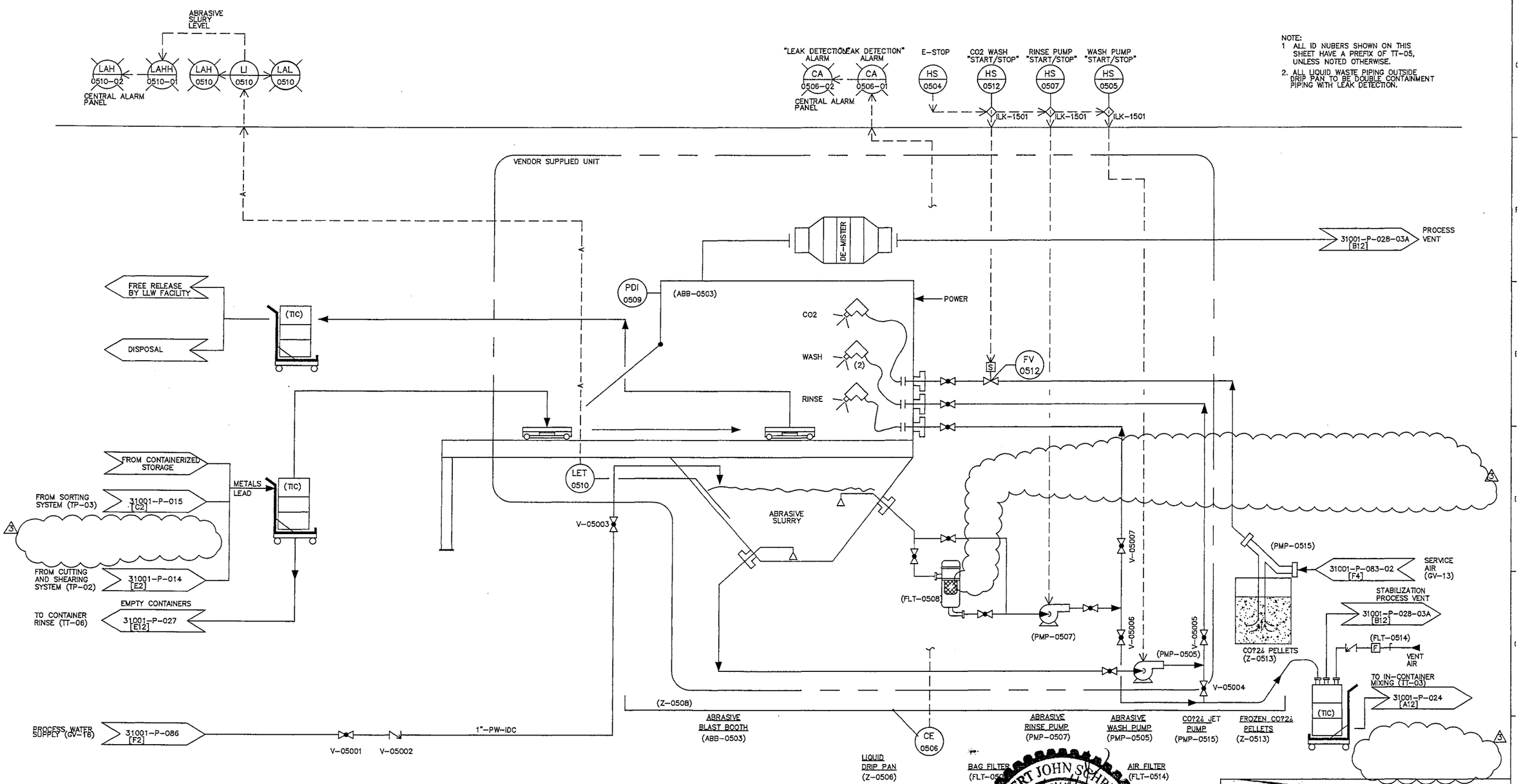

ROBERT JOHN SCHREIBER
STATE OF WASHINGTON
REGISTERED PROFESSIONAL ENGINEER

REV	DATE	BY	QA	DATE	DESCRIPTION
3	6/05/14	SDN			PERMIT MODIFICATION REQUEST 135

REVISION

PermaFix® environmental services
A Nuclear Services and Waste Management Company

DATE	
DRAWN	
CHECKED	
DFTG APVD	
ENGR	
APVD	
OTHER	
QA	
APPVD FOR IMPLEMENTATION BY	
FOR	DATE

MIXED WASTE FACILITY
BUILDING 13

PIPING AND INSTRUMENTATION DIAGRAM-PHYSICAL EXTRACTION (DECON) SYSTEM (TT-05)

SCALE: NONE | SHEET NO. 1

31001-P-026 | REV 3

Copy
Review & Recycle

LINE CONTINUATION TABLE		
TAG	FROM	TO
A	PAL-0616	ILK-1601
B	LAHH-0601	ILK-1602
C	ZAH-0603	ILK-1603
D	ZAL-0603	ILK-1604

NOTE:
1. ALL ID NUMBERS SHOWN ON THIS SHEET HAVE A PREFIX OF TT-06, UNLESS NOTED OTHERWISE.

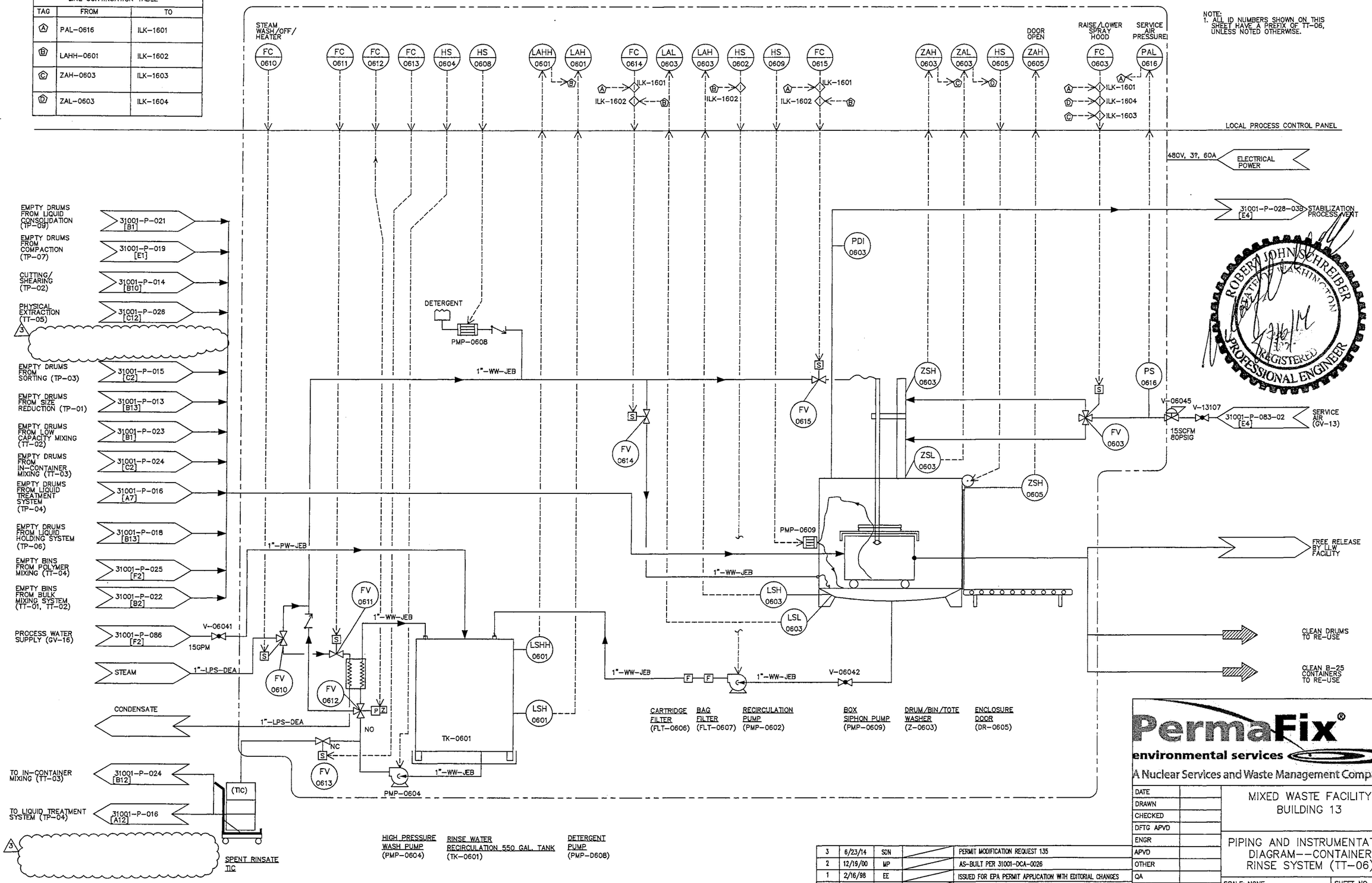

REV	DATE	BY	QA	DATE	DESCRIPTION
3	6/23/14	SDN			PERMIT MODIFICATION REQUEST 135
2	12/19/00	MP			AS-BUILT PER 31001-DCA-0026
1	2/16/98	EE			ISSUED FOR EPA PERMIT APPLICATION WITH EDITORIAL CHANGES

REVISION

PermaFix® environmental services
A Nuclear Services and Waste Management Company

DATE	
DRAWN	
CHECKED	
DFTG APVD	
ENGR	
APVD	
OTHER	
QA	
APPVD FOR IMPLEMENTATION BY	
FOR DATE	

MIXED WASTE FACILITY
BUILDING 13

PIPING AND INSTRUMENTATION DIAGRAM--CONTAINER RINSE SYSTEM (TT-06)

SCALE: NONE | SHEET NO. 1

31001-P-027 | REV 3

Copy
Review & Recycle

NOTE:
1. ALL ID NUMBERS SHOWN ON THIS SHEET HAVE A PREFIX OF SB-09, UNLESS NOTED OTHERWISE.
2. ONLY ONE SYSTEM ON AT A TIME (TP-0 TP-02, BULK RECEIVING)

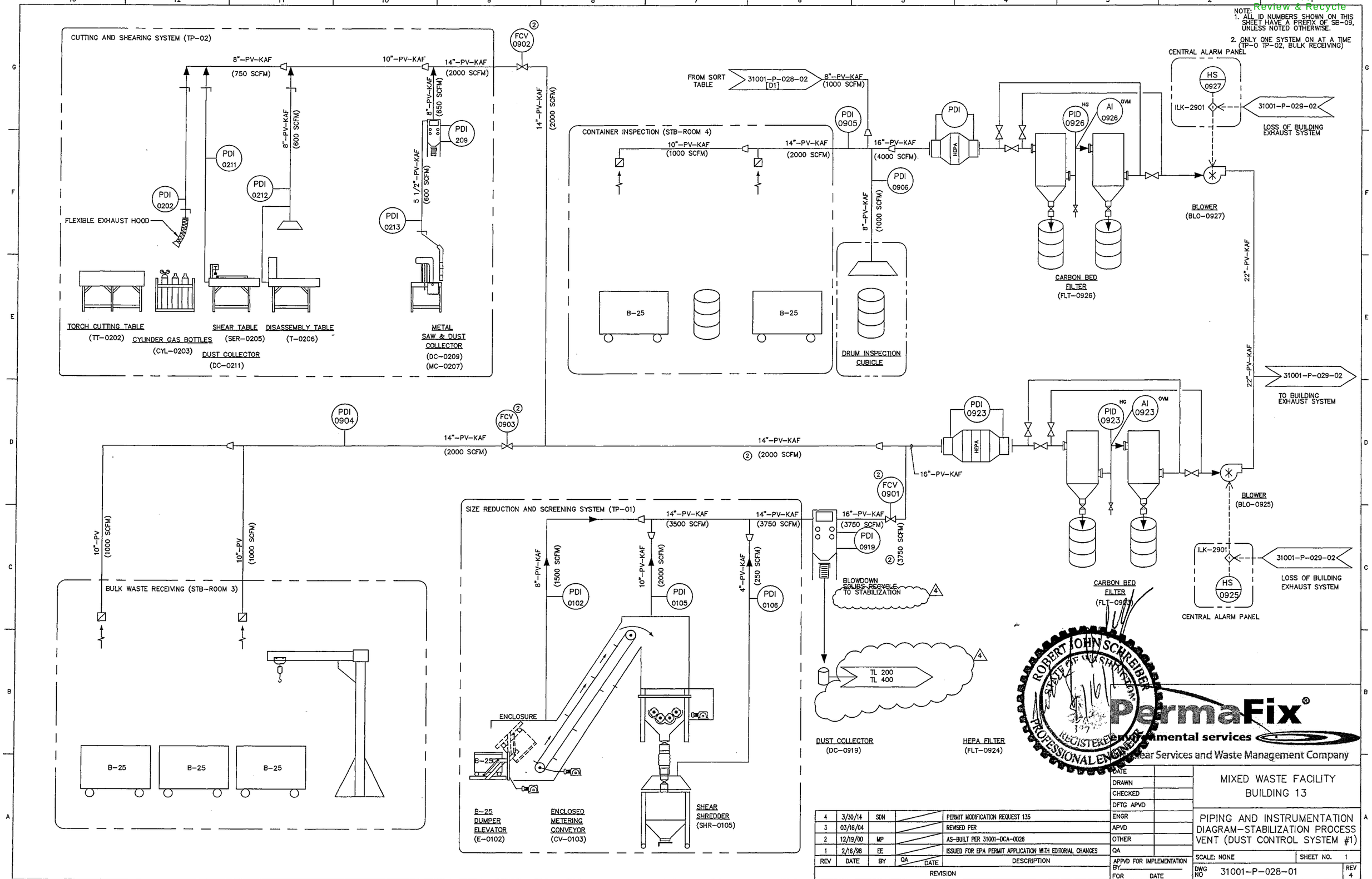

REV	DATE	BY	QA	DATE	DESCRIPTION
4	3/30/14	SDN			PERMIT MODIFICATION REQUEST 135
3	03/16/04				REVISED PER
2	12/19/00	MP			AS-BUILT PER 31001-DCA-0026
1	2/16/98	EE			ISSUED FOR EPA PERMIT APPLICATION WITH EDITORIAL CHANGES

REVISION

DATE	
DRAWN	
CHECKED	
DFTG APVD	
ENGR	
APVD	
OTHER	
QA	
APPVD FOR IMPLEMENTATION BY	
FOR DATE	

MIXED WASTE FACILITY
BUILDING 13

PIPING AND INSTRUMENTATION DIAGRAM-STABILIZATION PROCESS VENT (DUST CONTROL SYSTEM #1)

SCALE: NONE | SHEET NO. 1

DWG NO 31001-P-028-01 | REV 4

Copy
Review & Recycle

NOTE:
1. ALL ID NUMBERS SHOWN ON THIS SHEET HAVE A PREFIX OF SB-09, UNLESS NOTED OTHERWISE.

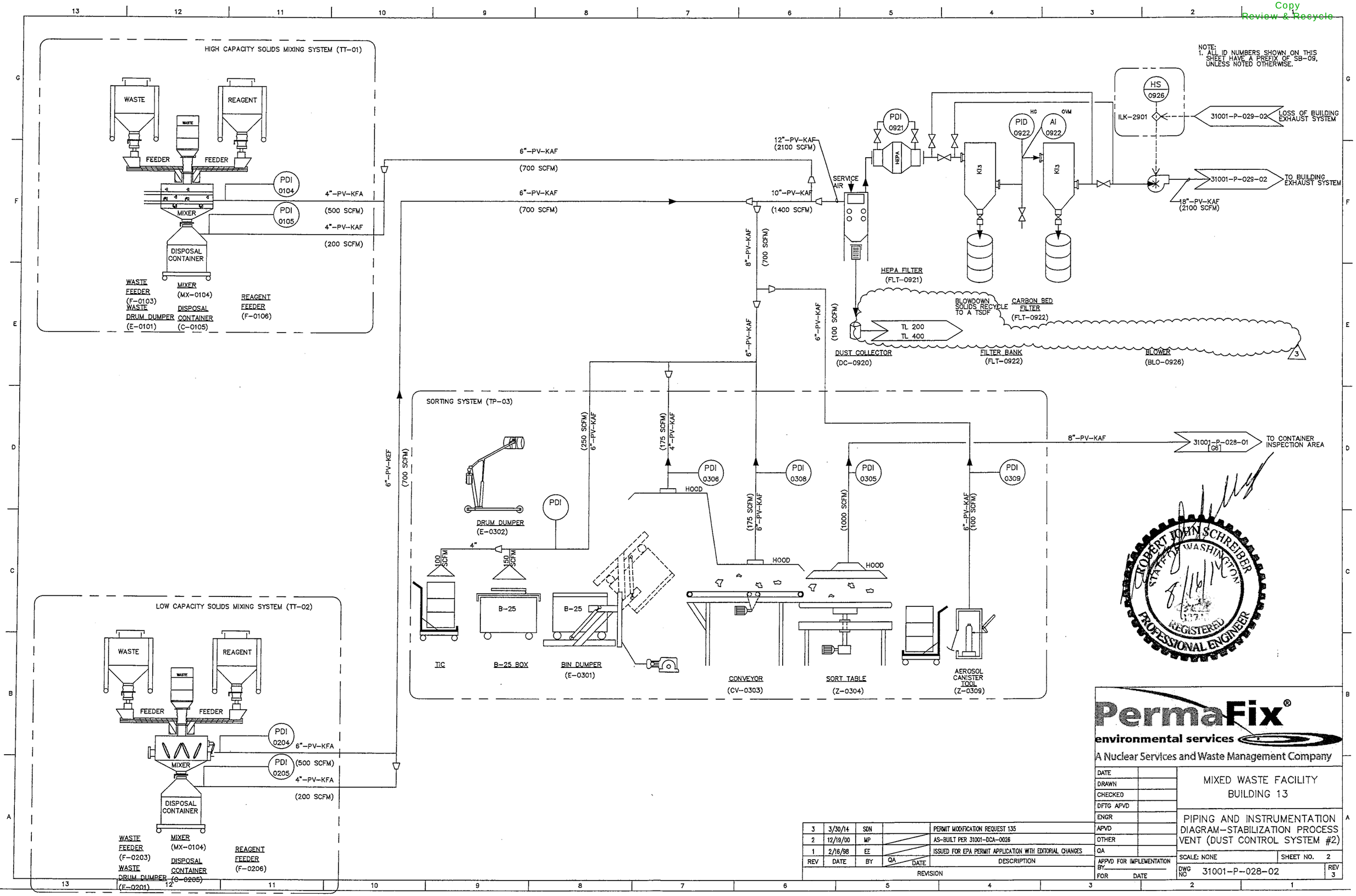

ROBERT JOHN SCHREIBER
STATE OF WASHINGTON
8/16/11
REGISTERED
PROFESSIONAL ENGINEER

PermaFix®
environmental services
A Nuclear Services and Waste Management Company

REV	DATE	BY	QA	DATE	DESCRIPTION
3	3/30/14	SDN			PERMIT MODIFICATION REQUEST 135
2	12/19/00	MP			AS-BUILT PER 31001-DCA-0026
1	2/16/98	EE			ISSUED FOR EPA PERMIT APPLICATION WITH EDITORIAL CHANGES

REVISION

DATE	
DRAWN	
CHECKED	
DFTG APVD	
ENGR	
APVD	
OTHER	
QA	
APPVD FOR IMPLEMENTATION BY	
FOR DATE	

MIXED WASTE FACILITY
BUILDING 13

PIPING AND INSTRUMENTATION DIAGRAM-STABILIZATION PROCESS VENT (DUST CONTROL SYSTEM #2)

SCALE: NONE | SHEET NO. 2

DWG NO 31001-P-028-02 | REV 3

Copy
Review & Recycle

NOTE:
ALL ID NUMBERS SHOWN ON THIS SHEET HAVE PREFIX OF SB-02. UNLESS NOTED OTHERWISE.

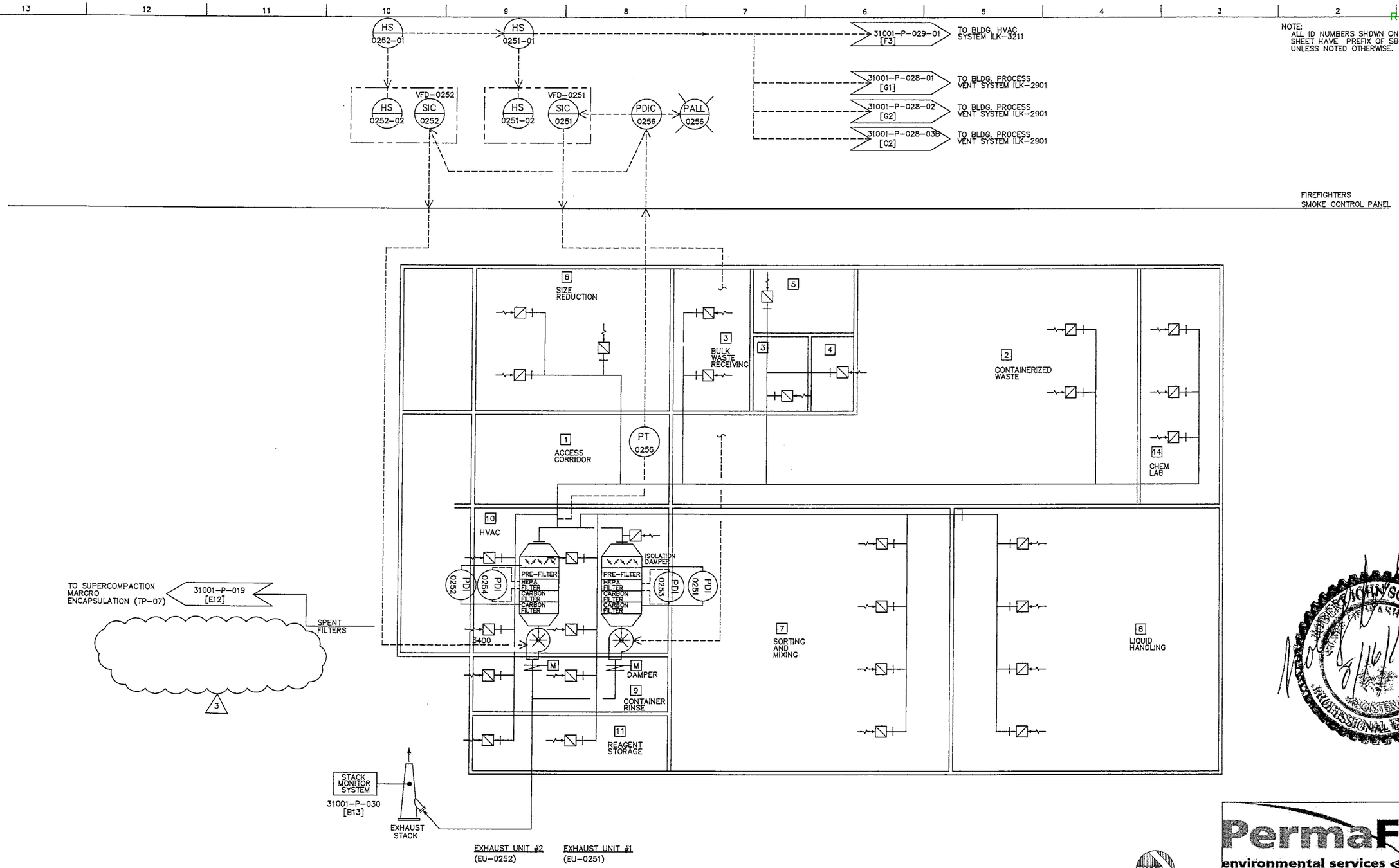

REV	DATE	BY	QA	DATE	DESCRIPTION
3	3/30/14	SDN			PERMIT MODIFICATION REQUEST 135
2	12/19/00	MP			AS-BUILT PER 31001-DCA-0026
1	2/16/98	EE			ISSUED FOR EPA PERMIT APPLICATION WITH EDITORIAL CHANGES

REVISION

PermaFix® environmental services
A Nuclear Services and Waste Management Company

DATE	
DRAWN	
CHECKED	
DFTG APVD	
ENGR	
APVD	
OTHER	
QA	
APPVD FOR IMPLEMENTATION BY	
FOR DATE	

MIXED WASTE FACILITY
BUILDING 13

PIPING AND INSTRUMENTATION DIAGRAM-CONFINEMENT SYSTEM (EXHAUST) (SB-02)

SCALE: NONE | SHEET NO. 2

DWG NO 31001-P-029-02 | REV 3

Copy
Review & Recycle

NOTE:
1. ALL ID NUMBERS SHOWN ON THIS SHEET HAVE A PREFIX OF SB-01, UNLESS NOTED OTHERWISE.

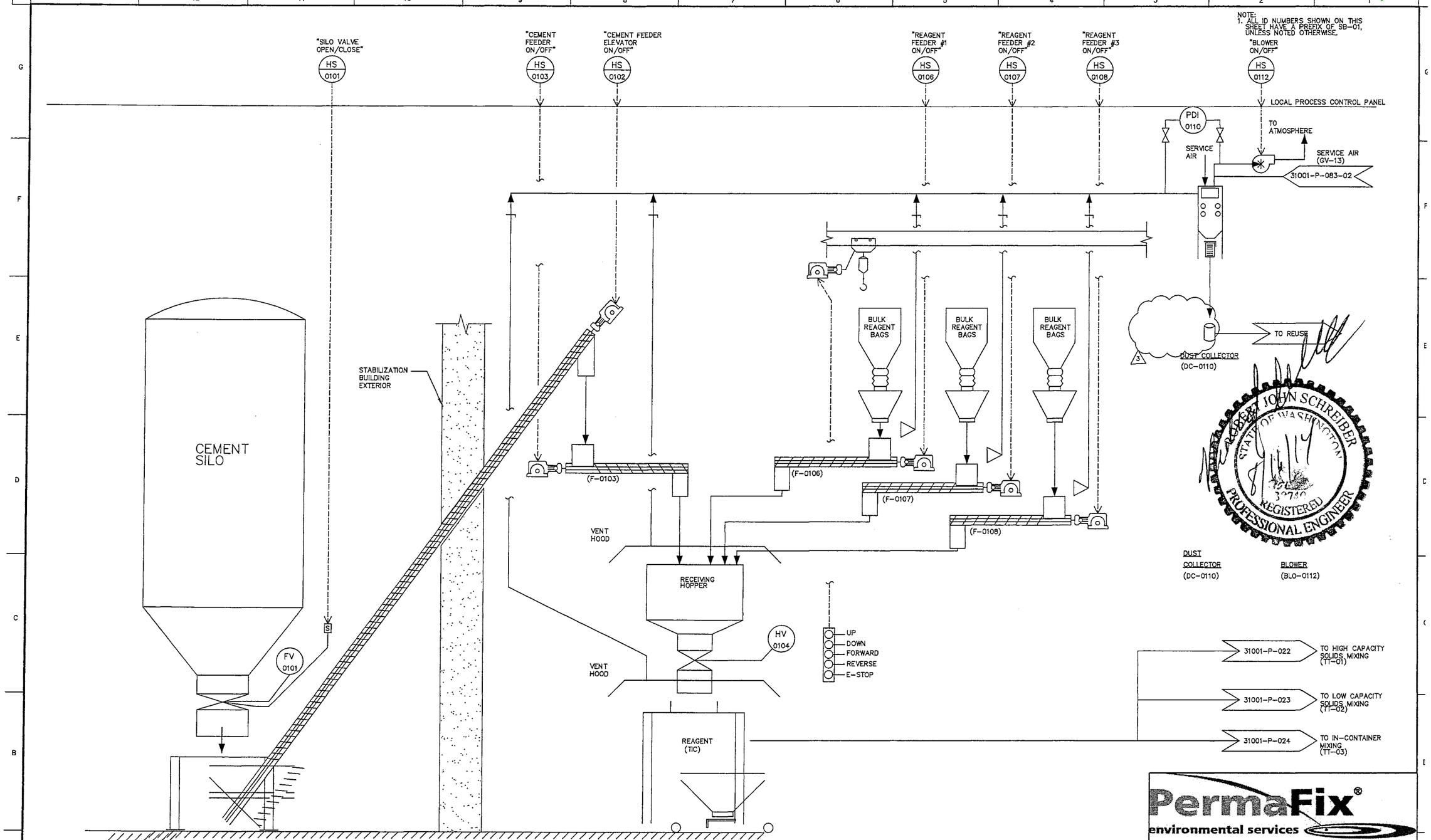

REV	DATE	BY	CHECKED	APPROVED	DESCRIPTION
3	7/01/14	SDN			PERMIT MODIFICATION REQUEST 135
2	12/19/00	MP	RM	FF	AS-BUILT PER 31001-DCA-0026
1	2/16/98	EE	ATG	FF	ISSUED FOR EPA PERMIT APPLICATION WITH EDITORIAL CHANGES

REVISIONS

CADCODE | CADFILE 31001-P-031-01-Rev3 PMR135.dwg

PermaFix® environmental services
A Nuclear Services and Waste Management Company

DRAWN	DATE
CHECKED	
DFTG APVD	
ENGR	
APVD	
OTHER	
QA	

APPROVED FOR IMPLEMENTATION
BY
FOR DATE

MIXED WASTE FACILITY
BUILDING 13

PIPING AND INSTRUMENTATION DIAGRAM-BULK REAGENT DISPENSING (SB-01)

SCALE NONE | SHEET NO 1 | SHEETS 1

DWG NO 31001-P-031 | REV 3

PERMIT FIGURE NUMBER: NONE

Copy
Review & Recycle

PIPE AND FITTING SYMBOLS

- WELDED JOINT
- SCREWED JOINT (OR GENERIC SINGLE LINE)
- GROOVED END JOINT
- FLANGED JOINT
- HUB END FLG JOINT
- WELDNECK FLANGE JOINT
- STUB END OR FLANGE ADAPTOR WITH FLANGE RING
- MECHANICAL JOINT
- BELL AND SPIGOT END (LEADED)
- HUB AND SPIGOT JOINT (RUBBER GASKET)
- GROOVED END ADAPTER FLANGE
- FLANGED COUPLING ADAPTER
- FLEXIBLE COUPLING
- FLEXIBLE COUPLING WITH THRUST TIES
- BELLOWS EXPANSION JOINT
- BELLOWS EXPANSION JOINT WITH THRUST TIES
- FLEXIBLE CONNECTOR
- UNION
- ELBOW, 45 DEGREE
- ELBOW, 90 DEGREE
- ELBOW, 90 DEGREE LONG RADIUS
- ELBOW, 90 DEGREE REDUCING
- ELBOW UP
- ELBOW DOWN
- DROP IN RUN
- VALVE IN THE RISE
- TEE
- TEE, REDUCING
- TEE UP
- TEE DOWN
- LATERAL
- LATERAL UP
- LATERAL DOWN
- REDUCER, CONCENTRIC
- REDUCER, ECCENTRIC
- PIPE CAP
- PIPE PLUG
- BLIND FLANGE
- ANCHOR
- PIPE ALIGNMENT GUIDE
- WALL ANCHOR

VALVE SYMBOLS

- BALL VALVE
- VEE-BALL VALVE
- THREEWAY BALL VALVE ARROWS INDICATE FLOW PATTERN
- BUTTERFLY VALVE
- CHECK, SWING VALVE
- CHECK, BALL VALVE
- CHECK, WAFER VALVE
- DIAPHRAGM VALVE
- GATE VALVE
- GATE, KNIFE VALVE
- GATE, ANGLE VALVE
- GATE, FLANGED VALVE
- GATE, SLIDE
- GLOBE VALVE
- PADDLE WHEEL FLOW METER
- GLOBE, ANGLE VALVE
- GLOBE, FLANGED VALVE
- GLOBE, THREEWAY VALVE ARROWS INDICATE FLOW PATTERN
- NEEDLE VALVE
- PLUG VALVE
- PLUG, FLANGED VALVE
- PLUG, ECCENTRIC VALVE SEAT PORT
- PLUG, THREEWAY VALVE ARROWS INDICATE FLOW PATTERN
- FLOAT VALVE
- HOSE BIBB SCHEMATIC
- PINCH VALVE
- CIRCUIT SETTER BALANCING
- QUICK ACTION VALVE
- STOP CHECK
- TRIPLE DUTY VALVE
- ANGLE STOP CHECK
- PRESSURE RELIEF (PSV)
- RELIEF VALVE
- AIR VENT, AUTOMATIC
- AIR VENT, MANUAL
- PRESSURE REGULATING PRV, VALVE BODY FEED (REGULATED SIDE)
- PRESSURE REGULATING PRV, LINE FEED (REGULATED SIDE)
- DIAPHRAM OPERATED VALVE
- GAS PRESSURE REGULATING
- FLOW ORIFICE (PRESSURE REDUCING)
- RUPTURE DISC (PRESSURE RELIEF)
- REDUCED PRESSURE BACKFLOW PREVENTER
- CRYOGENIC VALVE
- OS&Y VALVE
- OS&Y VALVE, SUPERVISED
- EXHAUST DAMPER

MISCELLANEOUS PIPING SYMBOLS

- CAM-LOC TYPE HOSE COUPLING
- TUBE COUPLING
- STRAINER, WYE
- STRAINER, BASKET
- PETE'S PLUG
- DIAPHRAGM SEAL
- SIGHT GLASS
- WAFER SIGHT GLASS
- GAUGE GLASS WITH COCK
- THERMOMETER
- TAP FITTING
- SWITCH, FLOW
- SWITCH, PRESSURE
- FILTER REGULATOR LUBRICATOR
- FILTER
- BAG FILTER
- DUCT HEATER
- PADDLE WHEEL FLOW METER
- VORTEX FLOW METER
- MAG FLOW METER
- ROTAMETER FLOW METER
- TURBINE FLOW METER
- FLOW CONTROL VENTURI
- STEAM TRAP
- STEAM TRAP ASSEMBLY
- SAMPLE VALVE (SP-)
- STERILE SAMPLE PORT (SP-)
- RESIN TRAP
- FLEX PIPE
- PRESSURE/VACUUM RELIEF
- PULSATION DAMPNER
- STATIC MIXER
- SSH-SAFETY SHOWER AND EYE WASH
- QUICK DISCONNECT COUPLING
- GRAVITY FLOW DRAIN
- SURGE SUPRESSOR

ACTUATOR SYMBOLS

- PZ PNEUMATIC WITH POSITIONER
- PS PNEUMATIC WITH SOLENOID
- E ELECTRIC
- P PNEUMATIC
- SET @ 30 PSIG AIR SET WITH SET GAUGE PRESSURE
- M MOTORIZED
- S TWO-WAY SOLENOID VALVE
- S THREE-WAY SOLENOID VALVE
- M MOTORIZED DIAPHRAGM
- MOTORIZED BUTTERFLY
- T/S TRAVEL STOP

EQUIPMENT SYMBOLS

- CENTRIFUGAL PUMP
- SUBMERSIBLE PUMP
- METERING PUMP
- DIAPHRAGM PUMP
- POSITIVE DISPLACEMENT PUMP
- DRUM PUMP
- BLOWER
- PLUG FAN
- MULTISTAGE CENTRIFUGAL PUMP
- VACUUM PUMP
- LIQUID RING PUMP
- SUMP PUMP
- MOTOR
- HEAT EXCHANGER
- EXPANSION JOINT
- SILENCER

INTERFACE SYMBOLS

PROCESS

XXX / YYY — PIPING INTERFACE
A = INTERFACE I.D.
XXX = SOURCE SHEET NO.
YYY = DESTINATION SHEET NO.

SIGNAL

XXX A / YYY A — SIGNAL INTERFACE
A = INTERFACE I.D.
XXX = SOURCE SHEET NO.
YYY = DESTINATION SHEET NO.

B — LINE CONTINUATION
B = INTERFACE I.D.

INSTRUMENT IDENTIFICATION

SEE INSTRUMENT SOCIETY OF AMERICA TABLE (MODIFIED) FOR EXPLANATION OF TERMS

VENDOR SUPPLIED — DEVICE TYPE — DEVICE FUNCTION — ITEM

** OOA
AAA
BBBB-CCCC-DD

EQUIPMENT NUMBER PER LOOP
SYSTEM NUMBER (NOT ALWAYS SHOWN)

- FIELD MOUNTED DEVICE
- PANEL MOUNTED DEVICE
- DISCRETE LOGIC INTERLOCK
- CALCULATION/DECISIONS

LINE LEGEND

- ANALOG SIGNAL (4 TO 20 mADC ETC.)
- DISCRETE SIGNAL (ON/OFF ETC.)
- DATA SIGNAL
- PULSED FREQUENCY
- PNEUMATIC SIGNAL
- FILLED SYSTEM SIGNAL
- HYDRAULIC SYSTEM SIGNAL
- SOFTWARE LINK SIGNAL
- ELECTRICAL POWER

TRANSDUCERS

A	ANALOG
D	DIGITAL
E	VOLTAGE
F	FREQUENCY
I	CURRENT
P	PNEUMATIC
PF	PULSE FREQUENCY
PD	PULSE DURATION

EXAMPLE: I/P — CURRENT TO PNEUMATIC CONVERTER

(4) PARALLELING LINES, (PARENTHETICAL NUMBER) INDICATES THE NUMBER OF SIGNALS REPRESENTED

CONNECTING LINES

NON-CONNECTING LINES

PIPING LINE TYPE DESIGNATION

- DOUBLE CONTAINMENT PIPING
- INSULATED PIPING
- FLEXIBLE PIPE,HOSE
- HEAT TRACED PIPE

GENERAL NOTES

A. THIS IS A STANDARD LEGEND SHEET. THEREFORE, NOT ALL OF THE INFORMATION MAY BE USED ON THIS PROJECT.

B. COMPONENTS AND PANELS SHOWN WITH A SINGLE ASTERISK (*) ARE PROVIDED AS PART OF A PACKAGE SYSTEM. VENDOR FURNISHED, CONTACTOR TO INSTALL.

C. COMPONENTS AND PANELS SHOWN WITH A DOUBLE ASTERISK (**) ARE PROVIDED AS PART OF A PACKAGE SYSTEM. VENDOR FURNISHED AND INSTALLED.

PIPING DESIGNATION

EXAMPLE: 3/4-UPWS-RDT-000

- LINE NUMBER
- LINE CLASS DESIGNATION
- FLOW STREAM IDENTIFICATION
- NOMINAL PIPE DIAMETER IN INCHES

2x4-HCL-PCHIxPCH-000

- LINE NUMBER
- OUTER PIPE LINE CLASS
- INNER PIPE LINE CLASS
- FLOW STREAM IDENTIFICATION
- OUTER PIPE DIAMETER IN INCHES
- INNER PIPE DIAMETER IN INCHES

NON-FLANGED JOINTS

- BUTT WELD
- SOCKET WELD
- SCREWED JOINT

ROBERT JOHN SCHREIBER — STATE OF WASHINGTON — REGISTERED PROFESSIONAL ENGINEER

REV	DATE	BY	QA	DATE	DESCRIPTION
2	7/01/14	SDN			PERMIT MODIFICATION REQUEST 135
1	3/30/01	RM			AS-BUILT PER 31001-DCA-030
0	2/16/98	ECE			ISSUE FOR TSCA/RCRA PERMIT APPL.

REVISION

PermaFix® environmental services
A Nuclear Services and Waste Management Company

DATE	
DRAWN	
CHECKED	
DFTG APVD	
ENGR	
APVD	
OTHER	
QA	
APPVD FOR IMPLEMENTATION BY	
FOR	DATE

MIXED WASTE FACILITY
BUILDING 13
(MWNT) & (MWTH)

2 STANDARD LEGEND SHEET 1

SCALE: NONE — SHEET NO. 1

31001-P-070 — REV 2

Copy
Review & Recycle

LINE CLASS DESIGNATION

K E A E

PIPE MATERIAL — PRESSURE — JOINT OR SERVICE — SERVICE

FIRST LETTER		SECOND LETTER		THIRD LETTER		OPTIONAL FOURTH LETTER	
SYMBOL	PIPE MATERIAL	SYMBOL	MATERIAL RATED PRESSURE (PSIG)	SYMBOL	JOINT OR SERVICE	SYMBOL	SERVICE
A	A-53F/A-53B BLK, STEEL A-134,AWWA C200	A	ATM	A	WELDED	A	
B	A-53F GALV/A-53B BLK, 2-1/2 FLG, STEEL.	B	50	B	THREADED	B	
C	A-53F GALV/A-53B BLK, 5 FLG STEEL	C	100	C	SOLDERED	C	
D	A-106B SCH 40/A-53B, STEEL	D	125	D	BRAZED	D	
E	A-106B SCH 80/A-53B, STEEL	E	150	E	COMPRESSION	E	
F	A-106B/A-53B ALL SCH 80 STEEL	F	300	F	HUB	F	
G	A-333, STEEL	G	600	G	FUSEAL	G	
H	A-199, 1 1/4 CR, 1/2 MO, STEEL	H	900	H	SOLVENT CEMENT	H	CAUSTIC
I	COPPER	I	15	I	SEAL WELD	I	
J	304L, STAINLESS	J	175	J	JACKETED	J	
K	316L, STAINLESS	K	6000	K	NO COPPER	K	SPLIT FITTING
L	FRP			L	BLOWDOWN	L	CLEAR PVC
M	POLYETHYLENE			M	FLANGED	M	
N	POLYPROPYLENE			N	COAXIAL	N	COAXIAL
O	PVC, SCH 40			O	FM APPROVED	O	
P	PVC, SCH 80			P	GROOVED END	P	
Q	CPVC			Q	SANITARY		
R	PVDF			R	UL APPROVED	R	REFACTORY LINED (INSIDE)
S	TFE LINED			S		S	STEAM
T	FEP LINED					T	PASSIVATED, CLEANED, WELDS GROUND
U	PVDF LINED			U	CONTAINMENT		
V	DUCTILE IRON			V	NO HUB	V	NATURAL GAS
W	CRYOGENIC			W	FUSION WELDED	W	EXTRA CORROSION ALLOWANCE
X	POLYPROPYLENE LINED			X	ORBITAL WELDED	X	FRP REINFORCED
Y	SARAN LINED			Y	SHRINKABLE SLEEVE		
Z	A-106B SCH 80			Z	TUBING		
1	POLYBUTYLENE						
2	ABS						
3	CAST IRON						
4	CARBON STEEL TUBING						
5	CLAY						
6	RUBBER HOSE						
7	CONCRETE						
8	304						
9	PFA						

INSTRUMENT SOCIETY OF AMERICA TABLE
(MODIFIED)

	FIRST LETTER(S)		SUCCEEDING LETTERS		
	PROCESS OR INITIATING VARIABLE	MODIFIER	READOUT OR PASSIVE FUNCTION	OUTPUT FUNCTION	MODIFIER
A	ANALYSIS		ALARM		
B	BURNER FLAME		USERS CHOICE(*)	USERS CHOICE(*)	USERS CHOICE(*)
C	CONDUCTIVITY			CONTROL	CLOSE
D	DENSITY (S.G.)	DIFFERENTIAL			
E	VOLTAGE		PRIMARY ELEMENT		
F	FLOW RATE	RATIO			
G	GAUGE		GLASS		
H	HAND (MANUAL)				HIGH
I	CURRENT		INDICATE		OPEN
J	POWER	SCAN			
K	TIME OR SCHEDULE			CONTROL STATION	
L	LEVEL		LIGHT (PILOT)		LOW
M	MOTION				MEDIUM
N	USERS CHOICE(*)		USERS CHOICE(*)	USERS CHOICE(*)	USERS CHOICE(*)
O	USERS CHOICE(*)		ORIFICE		
P	PRESSURE (OR VACUUM)		POINT(TEST CONNECTION)		
Q	QUANTITY OR EVENT(*)	INTEGRATE	INTEGRATE		
R			RECORD OR PRINT		
S	SPEED OR FREQUENCY	SAFETY		SWITCH	
T	TEMPERATURE			TRANSMIT	
U	MULTIVARIABLE(*)		MULTIFUNCTION(*)		
V	VIBRATION			VALVE, DAMPER	
W	WEIGHT OR FORCE		WELL		
X	UNCLASSIFIED(*)		UNCLASSIFIED(*)	UNCLASSIFIED(*)	UNCLASSIFIED(*)
Y	EVENT OR SEQUENCE			COMPUTE(*) OR TRANSDUCE	
Z	POSITION			DRIVE, ACTUATE OR UNCLASSIFIED FINAL CONTROL ELEMENT	

(*) WHEN USED, EXPLANATION IS SHOWN ADJACENT TO INSTRUMENT SYMBOL. SEE ABBREVIATIONS AND LETTER SYMBOLS.

DEVICE TYPE ABBREVIATION LIST

CODE	SUBCODE	USE	DESCRIPTION
AA			ANALYTICAL ALARM
	AALL		ANALYTICAL ALARM LOW LOW
	AAL		ANALYTICAL ALARM LOW
	AAH		ANALYTICAL ALARM HIGH
	AAHH		ANALYTICAL ALARM HIGH HIGH
AE			ANALYTICAL ELEMENT
		pH	pH ELEMENT
		DP	DEW POINT ELEMENT
		PART	PARTICLE ELEMENT
		THC	THC ELEMENT
		ORP	ORP ELEMENT
		TOC	TOC ELEMENT
		OZONE	OZONE ELEMENT
		OXYGEN	OXYGEN ELEMENT
		CHLORINE	CHLORINE ELEMENT
AET			ANALYTICAL ELEMENT TRANSMITTER
AI			ANALYTICAL INDICATOR
		pH	pH INDICATOR
		DP	DEW POINT INDICATOR
		UV	UV INDICATOR
		PART	PARTICLE INDICATOR
		SILICA	SILICA INDICATOR
		TOC	TOC INDICATOR
		OZONE	OZONE INDICATOR
		OXYGEN	OXYGEN INDICATOR
		SODIUM	SODIUM INDICATOR
AC			ANALYTICAL CONTROLLER
AIC			ANALYTICAL INDICATING CONTROLLER
AT			ANALYTICAL TRANSMITTER
AIT			ANALYTICAL INDICATING TRANSMITTER
ACV			ANALYTICAL CONTROL VALVE
BCS			BAR CODE SCANNER
BCI			BAR CODE INDICATOR
CA			CONDUCTIVITY ALARM
CE			CONDUCTIVITY ELEMENT
CI			CONDUCTIVITY INDICATOR
CIC			CONDUCTIVITY INDICATING CONTROLLER
CC			CONDUCTIVITY CONTROLLER
CLS			CONDUCTIVITY LEVEL SENSOR
CIT			CONDUCTIVITY INDICATING TRANSMITTER
CT			CONDUCTIVITY TRANSMITTER
EI			VOLTAGE INDICATOR
EA			VOLTAGE ALARM
	EALL		VOLTAGE ALARM LOW LOW
	EAL		VOLTAGE ALARM LOW
	EAH		VOLTAGE ALARM HIGH
	EAHH		VOLTAGE ALARM HIGH HIGH
ES			VOLTAGE SWITCH
	ESLL		VOLTAGE SWITCH LOW LOW
	ESL		VOLTAGE SWITCH LOW
	ESH		VOLTAGE SWITCH HIGH
	ESHH		VOLTAGE SWITCH HIGH HIGH
ET			VOLTAGE TRANSMITTER
FA			FLOW ALARM
	FALL		FLOW ALARM LOW LOW
	FAL		FLOW ALARM LOW
	FAH		FLOW ALARM HIGH
	FAHH		FLOW ALARM HIGH HIGH
FC			FLOW CONTROLLER (STAND ALONE)
FIC			FLOW INDICATING CONTROLLER
FCV			FLOW CONTROL VALVE
FE			FLOW ELEMENT
FET			FLOW ELEMENT/TRANSMITTER
FI			FLOW INDICATOR
FIT			FLOW INDICATING TRANSMITTER
FQ			FLOW TOTALIZER
FQA			FLOW TOTALIZER ALARM
FQI			FLOW TOTALIZER INDICATOR
FR			FLOW RECORDER
FS			FLOW SWITCH
	FSLL		FLOW SWITCH LOW LOW
	FSL		FLOW SWITCH LOW
	FSH		FLOW SWITCH HIGH
	FSHH		FLOW SWITCH HIGH HIGH
FT			FLOW TRANSMITTER
FV			FLOW VALVE
FY			FLOW SIGNAL CONVERTER
GM			BETA-GAMMA MONITOR
HK			MANUAL VARIABLE CONTROL
HS			HAND SWITCH
HSI			HAND SWITCH POSITION INDICATOR

CODE	SUBCODE	USE	DESCRIPTION
II			CURRENT INDICATOR
IA			CURRENT ALARM
	IALL		CURRENT ALARM LOW LOW
	IAL		CURRENT ALARM LOW
	IAH		CURRENT ALARM HIGH
	IAHH		CURRENT ALARM HIGH HIGH
IS			CURRENT SWITCH
	ISLL		CURRENT SWITCH LOW LOW
	ISL		CURRENT SWITCH LOW
	ISH		CURRENT SWITCH HIGH
	ISHH		CURRENT SWITCH HIGH HIGH
IT			CURRENT TRANSMITTER
IY			CURRENT SIGNAL CONVERTER
JIT			POWER INDICATING TRANSMITTER
JY			POWER SIGNAL CONVERTER
KI			TIMER/COUNTER (DERIVED)
KY			TIMER/COUNTER (FIELD DEVICES)
LA			LEVEL ALARM
	LALL		LEVEL ALARM LOW LOW
	LAL		LEVEL ALARM LOW
	LAH		LEVEL ALARM HIGH
	LAHH		LEVEL ALARM HIGH HIGH
LC			LEVEL CONTROLLER (STAND ALONE)
LCV			LEVEL CONTROL VALVE
LE			LEVEL ELEMENT
LI			LEVEL INDICATOR
LIC			LEVEL INDICATING CONTROLLER
LIT			LEVEL INDICATING TRANSMITTER
LS			LEVEL SWITCH
	LSLL		LEVEL SWITCH LOW LOW
	LSL		LEVEL SWITCH LOW
	LSH		LEVEL SWITCH HIGH
	LSHH		LEVEL SWITCH HIGH HIGH
LT			LEVEL TRANSMITTER
LY			LEVEL SIGNAL CONVERTER
MV			MANUAL HAND VALVE
NA			HUMIDITY ALARM
	NALL		HUMIDITY ALARM LOW LOW
	NAL		HUMIDITY ALARM LOW
	NAH		HUMIDITY ALARM HIGH
	NAHH		HUMIDITY ALARM HIGH HIGH
NC			HUMIDITY CONTROLLER
NCV			HUMIDITY CONTROL VALVE
NE			HUMIDITY ELEMENT
NET			HUMIDITY ELEMENT/TRANSMITTER
NI			HUMIDITY INDICATOR
NIC			HUMIDITY INDICATING CONTROLLER
NY			HUMIDITY SIGNAL CONVERTER
PA			PRESSURE ALARM
	PALL		PRESSURE ALARM LOW LOW
	PAL		PRESSURE ALARM LOW
	PAH		PRESSURE ALARM HIGH
	PAHH		PRESSURE ALARM HIGH HIGH
PC			PRESSURE CONTROLLER
PCV			PRESSURE CONTROL VALVE
PCD			PRESSURE CONTROL DAMPER
PD			PNEUMATIC DAMPER ACTUATOR
PDC			PRESSURE DIFFERENTIAL CONTROLLER
PDI			PRESSURE DIFFERENTIAL INDICATOR
PDS			PRESSURE DIFFERENTIAL SWITCH
PDT			PRESSURE DIFFERENTIAL TRANSMITTER
PDZ			DAMPER POSITIONER
PI			PRESSURE INDICATOR
PIC			PRESSURE INDICATING CONTROLLER
PIS			PRESSURE INDICATING SWITCH
PIT			PRESSURE INDICATING TRANSMITTER
PRV			PRESSURE REDUCING VALVE
PS			PRESSURE SWITCH
	PSLL		PRESSURE SWITCH LOW LOW
	PSL		PRESSURE SWITCH LOW
	PSH		PRESSURE SWITCH HIGH
	PSHH		PRESSURE SWITCH HIGH HIGH
PSS			PRESSURE SAFETY SWITCH
PSV			PRESSURE SAFETY VALVE
PT			PRESSURE TRANSMITTER
PV			PRESSURE VALVE
PY			PRESSURE SIGNAL CONVERTER
QA			FAULT INDICATION (DERIVED)
QE			RUPTURE DISK
QI			STATUS INDICATOR (DERIVED)
QL			STATUS INDICATOR (FIELD)
QS			FAULT CONTACT

CODE	SUBCODE	USE	DESCRIPTION
RA			RESISTIVITY ALARM
	RALL		RESISTIVITY ALARM LOW LOW
	RAL		RESISTIVITY ALARM LOW
	RAH		RESISTIVITY ALARM HIGH
	RAHH		RESISTIVITY ALARM HIGH HIGH
RE			RESISTIVITY ELEMENT
RET			RESISTIVITY ELEMENT TRANSMITTER
RI			RESISTIVITY INDICATOR
	RILL		RESISTIVITY INDICATOR LOW LOW
	RIL		RESISTIVITY INDICATOR LOW
	RIH		RESISTIVITY INDICATOR HIGH
	RIHH		RESISTIVITY INDICATOR HIGH HIGH
RIT			RESISTIVITY INDICATING TRANSMITTER
RCV			RESISTIVITY CONTROL VALVE
RY			RESISTIVITY SIGNAL CONVERTER
SC			SPEED CONTROL
SCM			SPEED CONTROL MANUAL
SI			SPEED INDICATOR
	SIC		SPEED INDICATING CONTROLLER
TA			TEMPERATURE ALARM
	TALL		TEMPERATURE ALARM LOW LOW
	TAL		TEMPERATURE ALARM LOW
	TAH		TEMPERATURE ALARM HIGH
	TAHH		TEMPERATURE ALARM HIGH HIGH
TC			TEMPERATURE CONTROLLER (STAND ALONE)
TCD			TEMPERATURE CONTROL DAMPER
TCV			TEMPERATURE CONTROL VALVE
TE			TEMPERATURE ELEMENT
TET			TEMPERATURE/ELEMENT TRANSMITTER
TI			TEMPERATURE INDICATOR
TIT			TEMPERATURE INDICATING TRANSMITTER
TIC			TEMPERATURE INDICATING CONTROLLER
TR			TEMPERATURE RECORDER
TS			TEMPERATURE SWITCH
	TSLL		TEMPERATURE SWITCH LOW LOW
	TSL		TEMPERATURE SWITCH LOW
	TSH		TEMPERATURE SWITCH HIGH
	TSHH		TEMPERATURE SWITCH HIGH HIGH
TT			TEMPERATURE TRANSMITTER
TV			TEMPERATURE VALVE
TY			TEMPERATURE SIGNAL CONVERTER
VA			VIBRATION ALARM
VS			VIBRATION SWITCH
WE			WEIGHT/FORCE ELEMENT
WI			WEIGHT/FORCE INDICATOR
XV			SOLENOID VALVE
YA			ALARM EVENT
YAR			ALARM EVENT RECORDER
YD			DAMPER
YDC			DAMPER CONTROL
YK			EVENT TIMER
YR			EVENT RECORDER
YS			SMOKE DETECTOR
ZA			POSITION ALARM
ZC			POSITION CONTROLLER
ZI			POSITION INDICATOR
	ZIO		POSITION INDICATOR OPEN
	ZIC		POSITION INDICATOR CLOSED
ZS			POSITION SWITCH
	ZSO		POSITION SWITCH OPEN
	ZSC		POSITION SWITCH CLOSED
ZX			POSITION LOCK

LETTER SYMBOLS & DEVICE FUNCTION

AC	ALTERNATING CURRENT
ALT	ALTERNATING
AM	AUTO-MANUAL
AWFCO	AUTOMATIC WASTE FEED CUTOFF
C	CLOSED
CCS	CENTRAL CONTROL SYSTEM
Cl_2	CHLORINE (TYPICAL; USE STANDARD CHEMICAL FORMULA ABBREVIATION)
CM	COMPUTER MANUAL
COND	CONDUCTIVITY
PLC	PLC PANEL
DC	DIRECT CURRENT
DDC	DIRECT DRIVE CONTROL
ETM	ELAPSED TIME MONITOR
FAL	FAIL ALARM
FC	FAIL CLOSED
FO	FAIL OPEN
FOS	FAST-OFF-SLOW
FOSA	FAST-OFF-SLOW-AUTO
FOSR	FAST-OFF-SLOW-REMOTE
FR	FORWARD REVERSE
HOA	HAND-OFF-AUTO
HOR	HAND-OFF-REMOTE
I	CURRENT
LEAD	LEAD SELECTION
LEL	LOWER EXPLOSIVE LIMIT
LOS	LOCKOUT STOP
LCP	LOCAL CONTROL PANEL
LR	LOCAL-REMOTE
MCC-X	MOTOR CONTROL CENTER NO. X
NC	NORMALY CLOSED
NO	NORMALY OPEN
OC	OPEN-CLOSE(D)
OCA	OPEN-CLOSE-AUTO
O	OPEN
OO	ON-OFF
OOA	ON-OFF-AUTO
OOR	ON-OFF-REMOTE
ORP	OXIDATION REDUCTION POTENTIAL
OSC	OPEN-STOP-CLOSE
PART	PARTICLES
PCF	PROGRAMMABLE CONTROLLER FUNCTION
PCS	PROGRAMMABLE CONTROLLER SYSTEM
PLC	PROGRAMMABLE LOGIC CONTROLLER
pH	- LOG (H+ CONCENTRATION)
RES	RESISTIVITY
RM-X	REMOTE MULTIPLEXING MODULE NO. X
SF	SLOWER-FASTER
SIO2	SILICA
STBY	STANDBY SELECTION
SS	START-STOP
SSC	SUPERVISORY SET POINT CONTROL
THC	TOTAL HYDROCARBONS
TOC	TOTAL ORGANIC CARBON
VHC	VOLATILE HYDROCARBONS
VIB	VIBRATION
W	UNIT PROCESS No.
WFCO	WASTE FEED CUTOFF
X	PANEL No.
Δ	DIFFERENCE
Σ	SUM
X	MULTIPLY
÷	DIVIDE
(x)	CHARACTERIZED
X^n	RAISED TO THE Nth POWER
$\sqrt{\ }$	SQUARE ROOT
AVG	AVERAGE
↑	REPEAT OR BOOST
>	SELECT HIGHEST SIGNAL
<	SELECT LOWEST SIGNAL

GENERAL NOTES

A. THIS IS A STANDARD LEGEND SHEET. THEREFORE, NOT ALL OF THE INFORMATION MAY BE USED ON THIS PROJECT.

ROBERT JOHN SCHREIBER
STATE OF WASHINGTON
REGISTERED
PROFESSIONAL ENGINEER

REV	DATE	BY	QA	DATE	DESCRIPTION
2	7/21/14				PERMIT MODIFICATION REQUEST 135
1	3/30/01				AS-BUILT PER 31001-DCA-0030
0	2/16/98				ISSUE FOR TSCA/RCRA PERMIT APPLICATION

REVISION

PermaFix® environmental services
A Nuclear Services and Waste Management Company

DATE	
DRAWN	
CHECKED	
DFTG APVD	
ENGR	
APVD	
OTHER	
QA	
APPVD FOR IMPLEMENTATION BY	
FOR DATE	

MIXED WASTE FACILITY
BUILDING 13

STANDARD
LEGEND SHEET 2

SCALE: NONE | SHEET NO. 2
DWG. NO. 31001-070 | REV 2

Copy
Review & Recycle

FLOW STREAM IDENTIFICATION

CODE	DESCRIPTION
AS	REVERSE OSMOSIS, ANTI SCALANT
AW	ACID WASTEWATER
BA	BREATHING AIR
BBD	BOILER BLOWDOWN
BCE	BUILDING CONFINEMENT EXHAUST
BE	BOILER EXHAUST
CD	CONDENSATE DRAIN
CF	CHEMICAL FEED WATER TREATMENT
CHWR	CHILLED WATER RETURN
CHWS	CHILLED WATER SUPPLY
CO	CARBON MONOXIDE
CO2	CARBON DIOXIDE
CS	CAUSTIC SUPPLY
CW	CITY WATER POTABLE
D	DRAIN
EOG	EMERGENCY OFF GAS
FP	FIRE PROTECTION ABOVE GROUND
GCRH	GRAVITY CONDENSATE RETURN (STEAM)
GE	GENERAL EXHAUST
GS	GAS SAMPLING
HE	HELIUM
HPS	HIGH PRESSURE STEAM
HPSV	HIGH PRESSURE STEAM VENT
HW	DOMESTIC HOT WATER
H2	HYDROGEN
IA	INSTRUMENT AIR
IW	INDUSTRIAL WATER
LPS	LOW PRESSURE STEAM
LPSV	LOW PRESSURE STEAM VENT
LN2	LIQUID NITROGEN
NaOH	SODIUM HYDROXIDE
N2	NITROGEN
O2	OXYGEN
PCR	PUMPED CONDENSATE RETURN
PCWR	PROCESS COOLING WATER RETURN
PCWS	PROCESS COOLING WATER SUPPLY
POG	PROCESS OFF-GAS
PV	PROCESS VENT
PW	PROCESS WATER
SA	SERVICE AIR
SAN	DRAIN, SANITARY SEWER
SB	SCRUBBER BOTTOMS LIQUID
SCH	STEAM CONDENSATE (HIGH P)
SCL	STEAM CONDENSATE (LOW P)
SS	STORM SEWER
SYN	SYNGAS
V	VENT
VOC	SOLVENT EXHAUST

EQUIPMENT ABBREVIATIONS

CODE	DESCRIPTION
ABB	ABBRASIVE BLAST BOOTH
A	ASSEMBLY
AC	ACTIVATED CARBON FILTER
ACU	AIR CONDITIONING UNIT
AHU	AIR HANDLING UNIT
AL	AIRLOCK
AS	AIR SEPARATOR
BA	BREATHING AIR
BDD	BACK DRAFT DAMPER
BLO	BLOWER
BLR	BOILER
C	CONTAINER
CA	CARBON ABSORPTION UNIT
CAM	CONTINUOUS AIR MONITOR
CC	COOLING COIL
CG	CHARGE GATE
CH	CHILLER
CLT	CONTROLLER
CMP	COMPRESSOR
CPR	COMPUTER
CRN	CRANE
CRU	CONDENSATE RETURN UNIT
CSH	CRUSHER
CU	CONDENSATE UNIT
CV	CONVEYOR
CYL	GAS CYLINDERS
D	DOOR
DR	DRYER
E	ELEVATOR
EC	EVAPORATIVE COOLING
EFU	EXHAUST FAN UNIT
EPO	EMERGENCY POWER OFF
FA	FLAME ARRESTOR
FC	FAN COIL UNIT
F	FEEDER
FL	CARTRIDGE OR BAG FILTER
FLT	FILTER
FN	FAN
GA	GAS ANALYZER
GEN	GENERATOR
H	HOPPER
HC	HEAT COIL
HT	HEATER
HX	HEAT EXCHANGER
J	ISOLATION WATER SEAL
JB	JUNCTION BOX
LCP	LOCAL CONTROL PANEL
ME	MIST ELIMINATOR
MOT	MOTOR
MP	METERING PUMP
MSC	MISCELLANEOUS
MX	MIXER
PLC	PROGRAMMABLE LOGIC CONTROLLER
PMP	PUMP
PS	POWER SUPPLY
PT	PLASMA TORCH
Q	QUENCH
RO	REVERSE OSMOSIS UNIT
S	STACK
SC	SCRUBBER
SCR	SILICON CONTROLLED RECTIFIER
SEP	SEPARATOR
SG	STEAM GENERATOR
SHR	SHREDDER
SR	SCREEN
ST	STRAINER
TK	TANK
UPS	UNINTERRUPTABLE POWER SUPPLY
VFD	VARIABLE FREQUENCY DRIVE
VS	VESSEL
XT	TRANSFORMER
Y	PROCESS CHAMBER
Z	MISCELLANIOUS EQUIPMENT
MC	METAL SAW
T	TABLE

GENERAL NOTES

A. THIS IS A STANDARD LEGEND SHEET. THEREFORE, NOT ALL OF THE INFORMATION MAY BE USED ON THIS PROJECT.

REGISTERED PROFESSIONAL ENGINEER
ROBERT JOHN SCHREIBER
STATE OF WASHINGTON
7/16/14

REV	DATE	BY	QA	DATE	DESCRIPTION
2	8/13/14	SDN			PERMIT MODIFICATION REQUEST 135
1	3/30/01	RM			AS-BUILT PER 31001-DCA-0030
0	2/16/98	ECE			ISSUE FOR TSCA/RCRA PERMIT APPLICATION

REVISION

PermaFix®
environmental services
A Nuclear Services and Waste Management Company

DATE	
DRAWN	
CHECKED	
DFTG APVD	
ENGR	
APVD	
OTHER	
QA	
APPVD FOR IMPLEMENTATION BY	
FOR	DATE

MIXED WASTE FACILITY

STANDARD
LEGEND SHEET 3

SCALE: NONE | SHEET NO. 3
DWG. NO. 31001-P-070 | REV 2

Copy
Review & Recycle

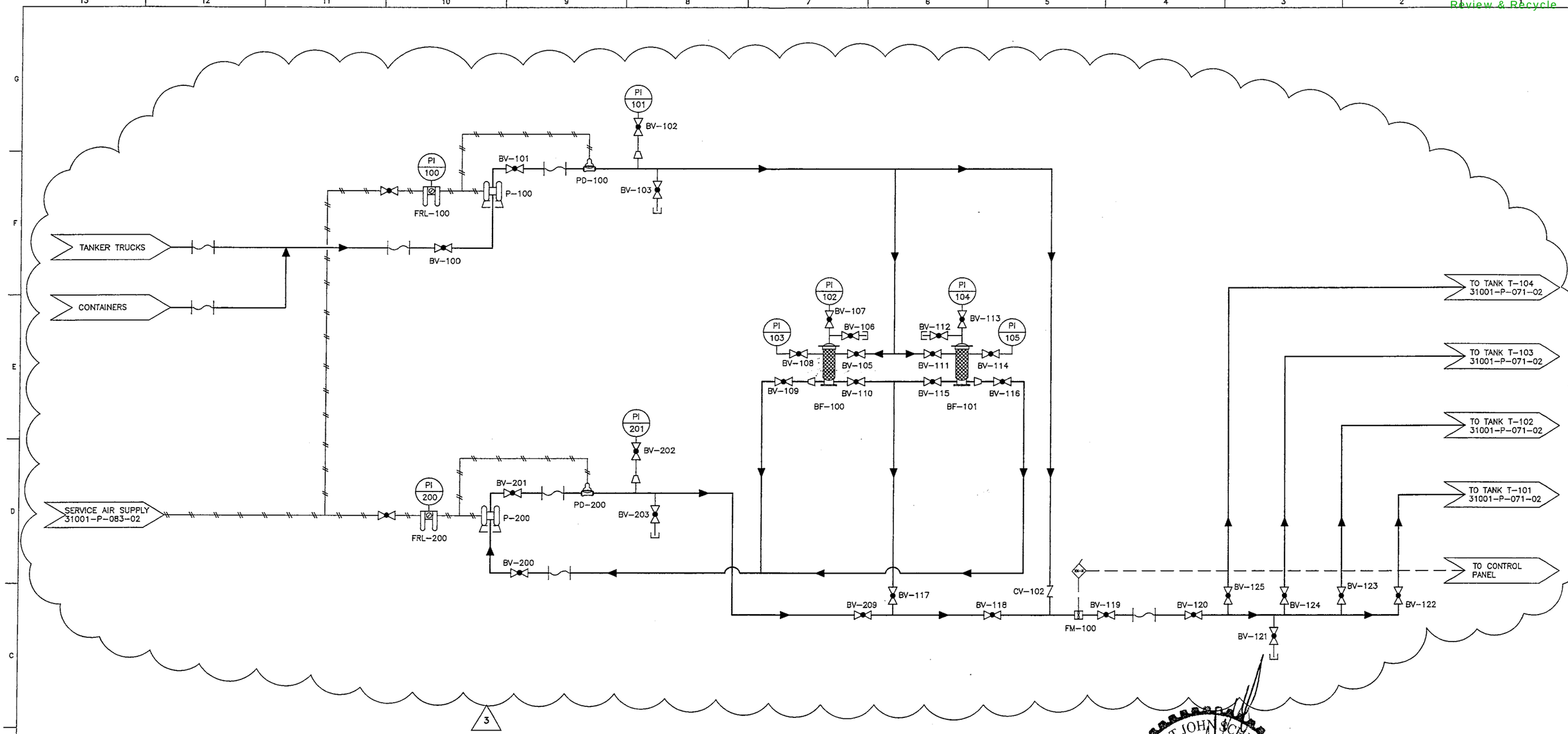

ROBERT JOHN SCHREIBER
STATE OF WASHINGTON
REGISTERED
PROFESSIONAL ENGINEER

PermaFix®
environmental services
A Nuclear Services and Waste Management Company

DATE	
DRAWN	
CHECKED	
DFTG APVD	
ENGR	
APVD	
OTHER	
QA	
APPVD FOR IMPLEMENTATION BY_____ FOR DATE	

MIXED WASTE FACILITY
BUILDING 13
MWTH

P&ID
EVAPORATOR SYSTEM
TP-16

SCALE: NONE | SHT 1 OF 3

31001-P-071 | REV 3

REV	DATE	BY	CHECKED	APPROVED	DESCRIPTION
3	6/18/14	SDN			PERMIT MODIFICATION REQUEST 135
2	3/30/01	RM	RAM	FF	AS-BUILT PER 31001-DCA-0030
1	6/17/98	ECE	ATG	FF	EDITORIAL CHANGES
0	2/16/98	ECE	ATG	FF	ISSUE FOR TSCA/RCRA PERMIT APPLICATION

REVISION

REFERENCE DRAWINGS
PF-MWTH-EVAP-P-001 SHEET 1

Copy
Review & Recycle

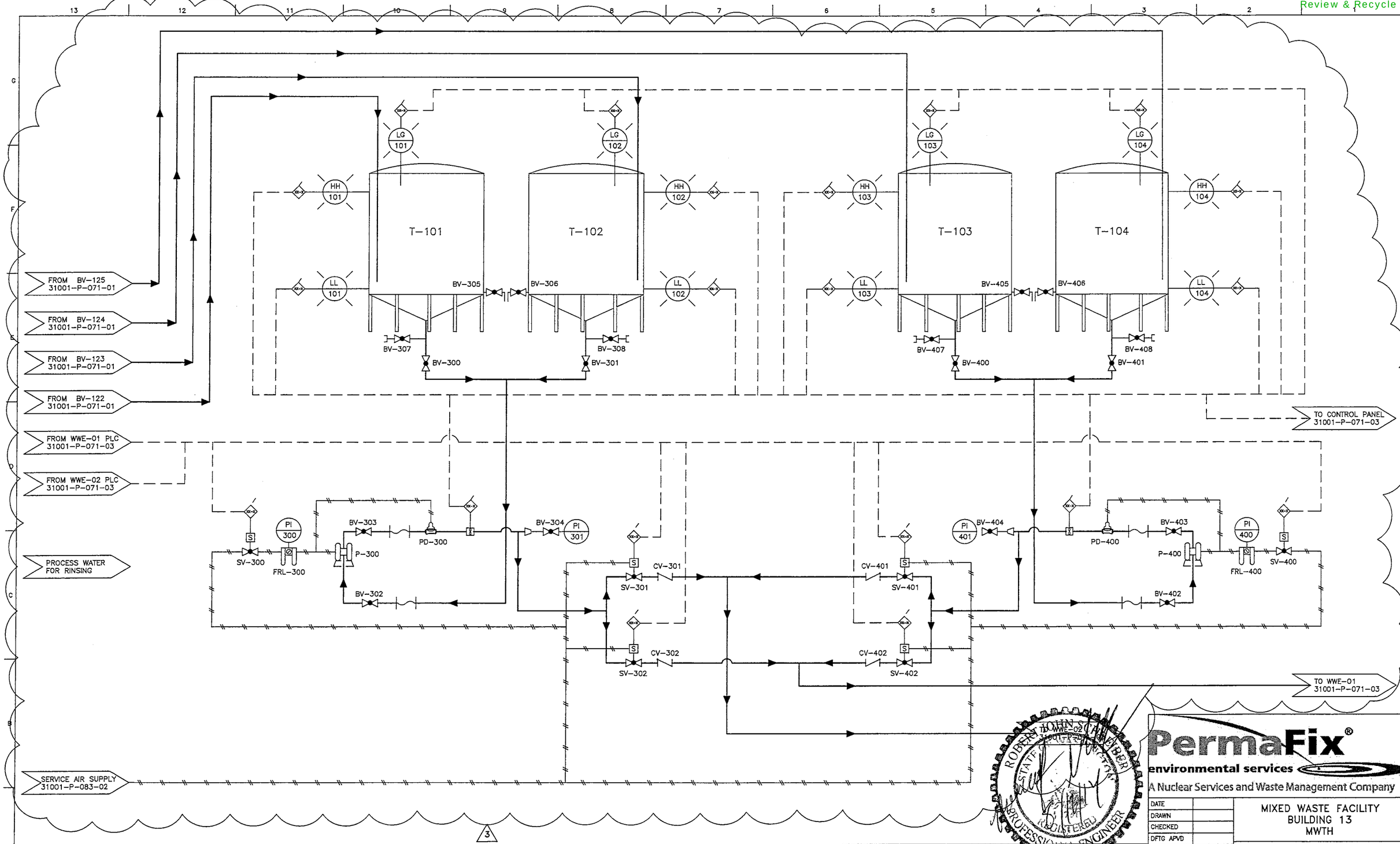

REV	DATE	BY	CHECKED	APPROVED	DESCRIPTION
3	6/18/14	SDN			PERMIT MODIFICATION REQUEST 135
2	3/30/01	RM	RAM	FF	AS-BUILT 31001-DCA-0030
1	6/17/98	ECE	ATG	FF	EDITORIAL CHANGES
0	2/16/98	ECE	ATG	FF	ISSUE FOR TSCA/RCRA PERMIT APPLICATION

REVISION

PF-MWTH-EVAP-P-002 SHEET 1
REFERENCE DRAWINGS

PermaFix®
environmental services
A Nuclear Services and Waste Management Company

DATE	
DRAWN	
CHECKED	
DFTG APVD	
ENGR	
APVD	
OTHER	
QA	
APPVD FOR IMPLEMENTATION BY	
FOR DATE	

MIXED WASTE FACILITY
BUILDING 13
MWTH

P&ID
EVAPORATOR SYSTEM
TP-16

SCALE: NONE | SHT 2 OF 3

31001-P-071 | REV 3

Copy
Review & Recycle

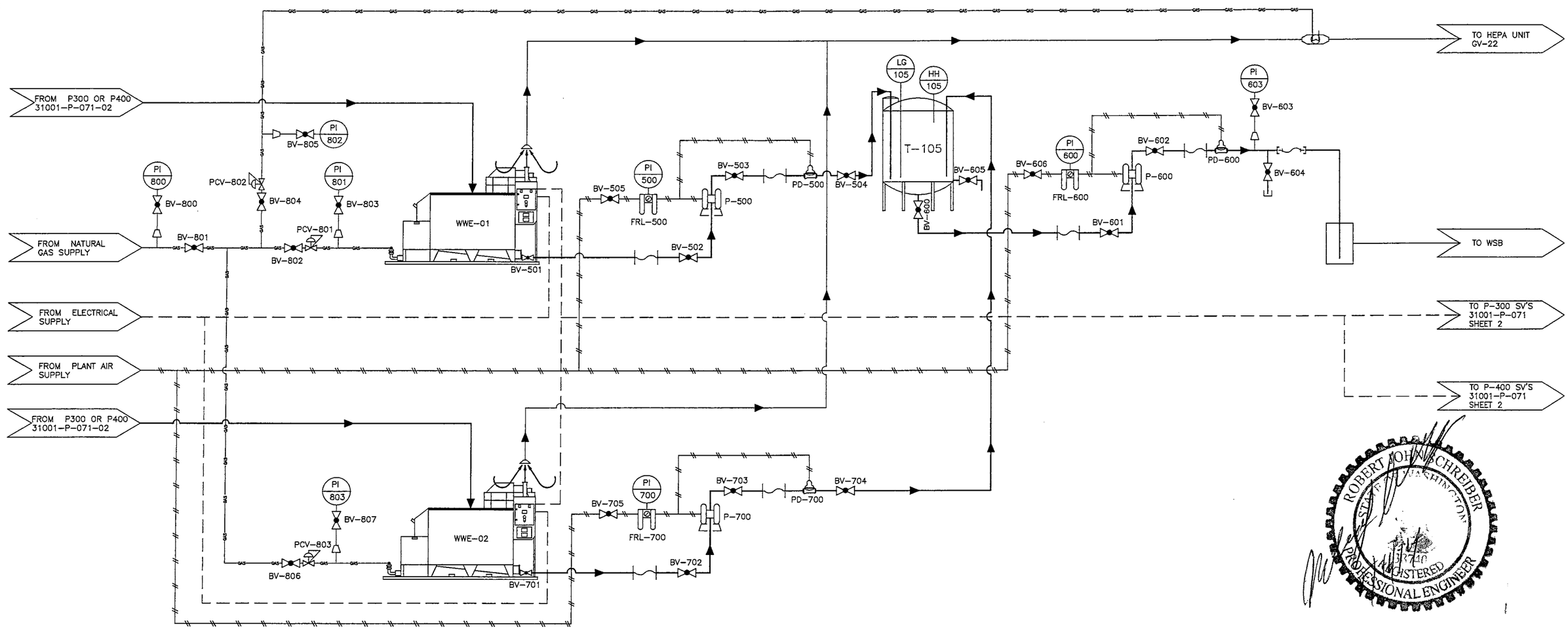

0	6/23/14	SDN			ISSUE FOR PERMIT MODIFICATION REQUEST 135
REV	DATE	BY	CHECKED	APPROVED	DESCRIPTION

REVISION

PF-MWTH-EVAP-P-003 SHEET 1
REFERENCE DRAWINGS

PermaFix®
environmental services
A Nuclear Services and Waste Management Company

DATE	6/23/14
DRAWN	SDN
CHECKED	
DFTG APVD	
ENGR	
APVD	
OTHER	
QA	
APPVD FOR IMPLEMENTATION BY	
FOR DATE	

MIXED WASTE FACILITY
BUILDING 13
MWTH

P&ID
EVAPORATOR SYSTEM
TP-16

SCALE: NONE
SHT 3 OF 3

31001-P-071
REV 0

Copy
Review & Recycle

GV-02 SYSTEM REMOVED

3

3

DRAWING REMOVED
FROM PERMIT

REV	DATE	BY	CHECKED	APPROVED	DESCRIPTION
3	6/17/14	SDN			PERMIT MODIFICATION REQUEST 135
2	3/30/01	RM	RAM	FF	AS-BUILT PER 31001-DCA-0030
1	6/17/98	ECE	ATG	FF	EDITORIAL CHANGES
0	2/16/98	ECE	ATG	FF	ISSUE FOR TSCA/RCRA PERMIT APPLICATION

REVISION

PermaFix®
environmental services
A Nuclear Services and Waste Management Company

DATE	
DRAWN	
CHECKED	
~~DEIG APVD~~	
ENGR	
APVD	
OTHER	
QA	
APPVD FOR IMPLEMENTATION BY: FOR DATE	

MIXED WASTE FACILITY
BUILDING 13
MWTH

P&ID
FEED SUBSYSTEM
GV-02

SCALE: NONE | SH 1

31001-P-072 | REV 3

Copy
Review & Recycle

GV-02 SYSTEM REMOVED

3

3

DRAWING REMOVED
FROM PERMIT

REV	DATE	BY	CHECKED	APPROVED	DESCRIPTION
3	6/17/14	SDN			PERMIT MODIFICATION REQUEST 135
2	3/30/01	RM	RAM	FF	AS-BUILT PER 31001-DCA-0030
1	6/17/98	ECE	ATG	FF	EDITORIAL CHANGES
0	2/16/98	ECE	ATG	FF	ISSUE FOR TSCA/RCRA PERMIT APPLICATION

REVISION

PermaFix®
environmental services
A Nuclear Services and Waste Management Company

DATE	
DRAWN	
CHECKED	
DFTG APVD	
ENGR	
APVD	
OTHER	
QA	
APPVD FOR IMPLEMENTATION BY	
FOR DATE	

MIXED WASTE FACILITY
BUILDING 13
MWTH

P&ID
FEED SYSTEMS
CONTINUOUS SOLIDS GV-02

SCALE: NONE | SH 2

31001-P-072 | REV 3

Copy 1
Review & Recycle

GV-02 SYSTEM REMOVED

2

2

DRAWING REMOVED
FROM PERMIT

REV	DATE	BY	CHECKED	APPROVED	DESCRIPTION
2	6/17/14	SDN			PERMIT MODIFICATION REQUEST 135
1	3/30/01	RM	RAM	FF	AS-BUILT PER 31001-DCA-0030
0	2/16/98	ECE	ATG	FF	ISSUE FOR TSCA/RCRA PERMIT APPLICATION

REVISION

PermaFix®
environmental services
A Nuclear Services and Waste Management Company

DATE	
DRAWN	
CHECKED	
DFTG APVD	
ENGR	
APVD	
OTHER	
QA	
APPVD FOR IMPLEMENTATION BY: FOR DATE	

MIXED WASTE FACILITY
BUILDING 13
MWTH

P&ID
PROCESS CHAMBER WASTE FEED
(BATCH) #1 GV-02

SCALE: NONE | SH 3

31001-P-072 | REV 2

Copy,
Review & Recycle

GV-02 SYSTEM REMOVED

3

3

DRAWING REMOVED FROM PERMIT

REV	DATE	BY	CHECKED	APPROVED	DESCRIPTION
3	6/17/14	SDN			PERMIT MODIFICATION REQUEST 135
2	3/30/01	RM	RAM	FF	AS-BUILT PER 31001-DCA-0030
1	6/17/98	ECE	ATG	FF	EDITORIAL CHANGES
0	2/16/98	ECE	ATG	FF	ISSUE FOR TSCA/RCRA PERMIT APPLICATION

REVISION

PermaFix®
environmental services
A Nuclear Services and Waste Management Company

DATE	
DRAWN	
CHECKED	
DFTG APVD	
ENGR	
APVD	
OTHER	
QA	
APPVD FOR IMPLEMENTATION BY_____ FOR DATE	

MIXED WASTE FACILITY
BUILDING 13

P&ID
PROCESS CHAMBER WASTE FEED
(BATCH) GV-02

SCALE: NONE | SH 4

31001-P-072 | REV 3

Copy
Review & Recycle

GV-03 SYSTEM REMOVED

2

2 DRAWING REMOVED FROM PERMIT

REV	DATE	BY	CHECKED	APPROVED	DESCRIPTION
2	6/25/14	SDN			PERMIT MODIFICATION REQUEST 135
1	3/30/01	RM	RAM	FF	AS-BUILT PER 31001-DCA-0030
0	2/16/98	ECE	ATG	FF	ISSUE FOR TSCA/RCRA PERMIT APPLICATION

REVISION

PermaFix®
environmental services
A Nuclear Services and Waste Management Company

DATE	
DRAWN	
CHECKED	
DFTG APVD	
ENGR	
APVD	
OTHER	
QA	
APPVD FOR IMPLEMENTATION BY	
FOR DATE	

MIXED WASTE FACILITY
BUILDING 13

P&ID
PROCESS CHAMBER
CHAMBER SENSORS GV-03

SCALE: AS SHOWN | SH 1

31001-P-073 | REV 2

Copy
Review & Recycle

GV-03 SYSTEM REMOVED

3

3

DRAWING REMOVED
FROM PERMIT

REV	DATE	BY	CHECKED	APPROVED	DESCRIPTION
3	6/25/14	SDN			PERMIT MODIFICATION REQUEST 135
2	3/30/01	RM	RAM	FF	AS-BUILT PER 31001-DCA-0030
1	6/17/98	ECE	ATG	FF	EDITORIAL CHANGES
0	2/16/98	ECE	ATG	FF	ISSUE FOR TSCA/RCRA PERMIT APPLICATION

REVISION

PermaFix®
environmental services
A Nuclear Services and Waste Management Company

DATE	
DRAWN	
CHECKED	
DFTG APVD	
ENGR	
APVD	
OTHER	
QA	
APPVD FOR IMPLEMENTATION BY	
FOR DATE	

MIXED WASTE FACILITY
BUILDING 13

P&ID
PROCESS CHAMBER
PLASMA POWER GV-03

SCALE: NONE | SH 2

31001-P-073 | REV 3

Copy
Review & Recycle

GV-03 SYSTEM REMOVED

2

2

DRAWING REMOVED
FROM PERMIT

REV	DATE	BY	CHECKED	APPROVED	DESCRIPTION
2	6/25/14	SDN			PERMIT MODIFICATION REQUEST 135
1	3/30/01	RM	RAM	FF	AS-BUILT PER 31001-DCA-0030
0	2/16/98	ECE	ATG	FF	ISSUE FOR TSCA/RCRA PERMIT APPLICATION

REVISION

PermaFix®
environmental services
A Nuclear Services and Waste Management Company

DATE	
DRAWN	
CHECKED	
DFTG APVD	
ENGR	
APVD	
OTHER	
QA	
APPVD FOR IMPLEMENTATION BY	
FOR	DATE

MIXED WASTE FACILITY
BUILDING 13

P&ID
PROCESS CHAMBER (GV-03)
PLASMA POWER

SCALE: NONE | SH 2.1

31001-P-073 | REV 2

Copy
Review & Recycle

GV-03 SYSTEM REMOVED

2

2

DRAWING REMOVED
FROM PERMIT

REV	DATE	BY	CHECKED	APPROVED	DESCRIPTION
2	6/25/14	SDN			PERMIT MODIFICATION REQUEST 135
1	3/30/01	RM	RAM	FF	AS-BUILT PER 31001-DCA-0030
0	2/16/98	ECE	ATG	FF	ISSUE FOR TSCA/RCRA PERMIT APPLICATION

REVISION

PermaFix®
environmental services
A Nuclear Services and Waste Management Company

DATE	
DRAWN	
CHECKED	
DFTG APVD	
ENGR	
APVD	
OTHER	
QA	
APPVD FOR IMPLEMENTATION BY_____ FOR DATE	

MIXED WASTE FACILITY
BUILDING 13

P&ID
PROCESS CHAMBER (GV-03)
PROCESS COOLING WATER

SCALE: NONE | SH 3

31001-P-073 | REV 2

Copy
Review & Recycle

GV-03 SYSTEM REMOVED

2

2

DRAWING REMOVED
FROM PERMIT

REV	DATE	BY	CHECKED	APPROVED	DESCRIPTION
2	6/25/14	SDN			PERMIT MODIFICATION REQUEST 135
1	3/30/01	RM	RAM	FF	AS-BUILT PER 31001-DCA-0030
0	2/16/98	ECE	ATG	FF	ISSUE FOR TSCA/RCRA PERMIT APPLICATION

REVISION

PermaFix®
environmental services
A Nuclear Services and Waste Management Company

DATE	
DRAWN	
CHECKED	
DFTG APVD	
ENGR	
APVD	
OTHER	
QA	
APPVD FOR IMPLEMENTATION BY FOR DATE	

MIXED WASTE FACILITY
BUILDING 13

P&ID
PROCESS CHAMBER (GV-03)
PROCESS COOLING WATER

SCALE: AS SHOWN | SH 4

31001-P-073 | REV 2

Copy
Review & Recycle

GV-03 SYSTEM REMOVED

4

4

DRAWING REMOVED
FROM PERMIT

REV	DATE	BY	CHECKED	APPROVED	DESCRIPTION
4	6/25/14	SDN			PERMIT MODIFICATION REQUEST 135
3	3/30/01	RM	RAM	FF	~~AS-BUILT PER 31001-DCA-0030~~
2	11/30/00	RM	WS	FF	CHANGES PER 31001-DCA-0024
1	6/17/98	ECE	ATG	FF	EDITORIAL CHANGES
0	2/16/98	ECE	ATG	FF	ISSUE FOR TSCA/RCRA PERMIT APPLICATION

REVISION

PermaFix®
environmental services
A Nuclear Services and Waste Management Company

DATE	
DRAWN	
CHECKED	
DFTG APVD	
ENGR	
APVD	
OTHER	
QA	
APPVD FOR IMPLEMENTATION BY	
FOR DATE	

MIXED WASTE FACILITY
BUILDING 13

P&ID
PROCESS CHAMBER (GV-03)
PROCESS OFF-GAS

SCALE: NONE SH 5

31001-P-073

REV 4

Copy
Review & Recycle

GV-03 SYSTEM REMOVED

2

2 DRAWING REMOVED FROM PERMIT

REV	DATE	BY	CHECKED	APPROVED	DESCRIPTION
2	6/25/14	SDN			PERMIT MODIFICATION REQUEST 135
1	3/30/01	RM	RAM	FF	AS-BUILT PER 31001-DCA-0030
0	2/16/98	ECE	ATG	FF	ISSUE FOR TSCA/RCRA PERMIT APPLICATION

REVISION

PermaFix®
environmental services
A Nuclear Services and Waste Management Company

DATE	
DRAWN	
CHECKED	
DFTG APVD	
ENGR	
APVD	
OTHER	
QA	
APPVD FOR IMPLEMENTATION BY	
FOR DATE	

MIXED WASTE FACILITY
BUILDING 13

P&ID
PROCESS CHAMBER (GV-03)
OVERFLOW AND BOTTOM DRAINS

SCALE: NONE SH 6

31001-P-073 REV 2

Copy
Review & Recycle

GV-03 SYSTEM REMOVED

2

2 DRAWING REMOVED FROM PERMIT

REV	DATE	BY	CHECKED	APPROVED	DESCRIPTION
2	6/25/14	SDN			PERMIT MODIFICATION REQUEST 135
1	3/30/01	RM	RAM	FF	AS-BUILT PER 31001-DCA-0030
0	2/16/98	ECE	ATG	FF	ISSUE FOR TSCA/RCRA PERMIT APPLICATION

REVISION

PermaFix®
environmental services
A Nuclear Services and Waste Management Company

DATE	
DRAWN	
CHECKED	
DFTG APVD	
ENGR	
APVD	
OTHER	
QA	
APPVD FOR IMPLEMENTATION BY	
FOR DATE	

MIXED WASTE FACILITY
BUILDING 13

P&ID
PROCESS CHAMBER (GV-03)
AC ELECTRODES

SCALE: NONE SH 7

31001-P-073 REV 2

Copy
Review & Recycle

GV-03 SYSTEM REMOVED

2

2 DRAWING REMOVED FROM PERMIT

REV	DATE	BY	CHECKED	APPROVED	DESCRIPTION
2	6/25/14	SDN			PERMIT MODIFICATION REQUEST 135
1	3/30/01	RM	RAM	FF	AS-BUILT PER 31001-DCA-0030
0	2/16/98	ECE	ATG	FF	ISSUE FOR TSCA/RCRA PERMIT APPLICATION

REVISION

PermaFix®
environmental services
A Nuclear Services and Waste Management Company

DATE	
DRAWN	
CHECKED	
DFTG APVD	
ENGR	
APVD	
OTHER	
QA	
APPVD FOR IMPLEMENTATION BY: FOR DATE	

MIXED WASTE FACILITY
BUILDING 13

P&ID
PROCESS CHAMBER (GV-03)
NITROGEN PURGE

SCALE: NONE | SH 8

31001-P-073 | REV 2

Copy
Review & Recycle

GV-03 SYSTEM REMOVED

4

4

DRAWING REMOVED
FROM PERMIT

REV	DATE	BY	CHECKED	APPROVED	DESCRIPTION
4	6/23/14	SDN			PERMIT MODIFICATION REQUEST 135
3	3/30/01	RM	RAM	FF	~~AS-BUILT PER 31001-DCA-0030~~
2	12/21/00	RM	WS	FF	CHANGES PER 31001-DCA-0025
1	6/17/98	ECE	ATG	FF	EDITORIAL CHANGES
0	2/16/98	ECE	ATG	FF	ISSUE FOR TSCA/RCRA PERMIT APPLICATION

REVISION

PermaFix®
environmental services
A Nuclear Services and Waste Management Company

DATE	
DRAWN	
CHECKED	
DFTG APVD	
ENGR	
APVD	
OTHER	
QA	
APPVD FOR IMPLEMENTATION BY	
FOR DATE	

MIXED WASTE FACILITY
BUILDING 13

P&ID
PROCESS CHAMBER (GV-03)
PROCESS STEAM

SCALE: NONE | SH 9

31001-P-073 | REV 4

Copy
Review & Recycle

GV-04 SYSTEM REMOVED

2

2 DRAWING REMOVED FROM PERMIT

REV	DATE	BY	CHECKED	APPROVED	DESCRIPTION
2	6/23/14	SDN			PERMIT MODIFICATION REQUEST 135
1	3/30/01	RM	RAM	FF	AS-BUILT PER 31001-DCA-0030
0	2/16/98	ECE	ATG	FF	ISSUE FOR TSCA/RCRA PERMIT APPLICATION

REVISION

PermaFix®
environmental services
A Nuclear Services and Waste Management Company

DATE	
DRAWN	
CHECKED	
DFTG APVD	
ENGR	
APVD	
OTHER	
QA	
APPVD FOR IMPLEMENTATION BY	
FOR DATE	

MIXED WASTE FACILITY
BUILDING 13

P&ID
PRODUCT HANDLING
(GV-04) UPPER OVERFLOW

SCALE: NONE | SH 1

31001-P-074 | REV 2

Copy
Review & Recycle

GV-04 SYSTEM REMOVED

2

2 DRAWING REMOVED FROM PERMIT

REV	DATE	BY	CHECKED	APPROVED	DESCRIPTION
2	6/23/14	SDN			PERMIT MODIFICATION REQUEST 135
1	3/30/01	RM	RAM	FF	AS-BUILT PER 31001-DCA-0030
0	2/16/98	ECE	ATG	FF	ISSUE FOR TSCA/RCRA PERMIT APPLICATION

REVISION

PermaFix®
environmental services
A Nuclear Services and Waste Management Company

DATE	
DRAWN	
CHECKED	
DFTG APVD	
ENGR	
APVD	
OTHER	
QA	
APPVD FOR IMPLEMENTATION BY	
FOR DATE	

MIXED WASTE FACILITY
BUILDING 13

P&ID
PRODUCT HANDLING (GV-04)
LWR OVERFLOW & BOT. DRAIN

SCALE: NONE | SH 2

31001-P-074 | REV 2

Copy
Review & Recycle

GV-05 SYSTEM REMOVED

2

2

DRAWING REMOVED
FROM PERMIT

REV	DATE	BY	CHECKED	APPROVED	DESCRIPTION
2	6/25/14	SDN			PERMIT MODIFICATION REQUEST 135
1	3/30/01	RM	RAM	FF	AS-BUILT PER 31001-DCA-0030
0	2/16/98	ECE	ATG	FF	ISSUE FOR TSCA/RCRA PERMIT APPLICATION

REVISION

PermaFix®
environmental services
A Nuclear Services and Waste Management Company

DATE	
DRAWN	
CHECKED	
DFTG APVD	
ENGR	
APVD	
OTHER	
QA	
APPVD FOR IMPLEMENTATION BY_____ FOR DATE	

MIXED WASTE FACILITY
BUILDING 13

P&ID
1ST STAGE SYNGAS
PROCESSING (GV-05)

SCALE: NONE | SH 1

31001-P-075 | REV 2

Copy
Review & Recycle

GV-06 SYSTEM REMOVED

3 DRAWING REMOVED FROM PERMIT

REV	DATE	BY	CHECKED	APPROVED	DESCRIPTION
3	6/17/14	SDN			PERMIT MODIFICATION REQUEST 135
2	3/30/01	RM	RAM	FF	AS-BUILT 31001-DCA-0030
1	11/5/99	JES	CLF	CLF	CHANGES PER 31001-P-DCA-004
0	2/16/98	ECE	ATG	FF	ISSUE FOR TSCA/RCRA PERMIT APPLICATION

REVISION

PermaFix® environmental services
A Nuclear Services and Waste Management Company

DATE	
DRAWN	
CHECKED	
DFTG APVD	
ENGR	
APVD	
OTHER	
QA	
APPVD FOR IMPLEMENTATION BY	
FOR	DATE

MIXED WASTE FACILITY
BUILDING 13

P&ID
2ND STAGE SYNGAS PROCESS
(GV-06) PRIMARY SCRUBBER

SCALE: NONE | SH 1

31001-P-076 | REV 3

Copy
Review & Recycle

GV–06 SYSTEM REMOVED

3

3 DRAWING REMOVED FROM PERMIT

REV	DATE	BY	CHECKED	APPROVED	DESCRIPTION
3	6/17/14	SDN			PERMIT MODIFICATION REQUEST 135
2	3/30/01	RM	RAM	FF	AS–BUILT 31001–DCA–0030
1	11/5/99	JES	CLF	CLF	CHANGES PER 31001–P–DCA–004
0	2/16/98	ECE	ATG	FF	ISSUE FOR TSCA/RCRA PERMIT APPLICATION

REVISION

PermaFix® environmental services
A Nuclear Services and Waste Management Company

DATE	
DRAWN	
CHECKED	
DFTG APVD	
ENGR	
APVD	
OTHER	
QA	
APPVD FOR IMPLEMENTATION BY FOR DATE	

MIXED WASTE FACILITY
BUILDING 13

P&ID
2ND STAGE SYNGAS PROCESS
(GV–06) SECONDARY SCRUBBER

SCALE: NONE | SH 2

31001–P–076 | REV 3

Copy
Review & Recycle

GV–06 SYSTEM REMOVED

3

DRAWING REMOVED
FROM PERMIT

REV	DATE	BY	CHECKED	APPROVED	DESCRIPTION
3	6/17/14	SDN			PERMIT MODIFICATION REQUEST 135
2	3/30/01	RM	RAM	FF	AS–BUILT PER 31001–DCA–0030
1	11/5/99	JES	CLF	CLF	CHANGES PER 31001–P–DCA–004
0	2/16/98	ECE	ATG	FF	ISSUE FOR TSCA/RCRA PERMIT APPLICATION

REVISION

PermaFix®
environmental services
A Nuclear Services and Waste Management Company

DATE	
DRAWN	
CHECKED	
DFTG APVD	
ENGR	
APVD	
OTHER	
QA	

APPVD FOR IMPLEMENTATION
BY_____
FOR DATE

MIXED WASTE FACILITY
BUILDING 13

P&ID
2ND STAGE SYNGAS PROCESS
(GV–06) HEME

SCALE: NONE | SH 3

31001–P–076 | REV 3

Copy
Review & Recycle

GV-06 SYSTEM REMOVED

3

3 DRAWING REMOVED FROM PERMIT

REV	DATE	BY	CHECKED	APPROVED	DESCRIPTION
3	6/17/14	SDN			~~PERMIT MODIFICATION REQUEST 135~~
2	3/30/01	RM	RAM	FF	AS-BUILT PER 31001-DCA-0030
1	11/5/99	JES	CLF	CLF	CHANGES PER 31001-P-DCA-004
0	2/16/98	ECE	ATG	FF	ISSUE FOR TSCA/RCRA PERMIT APPLICATION

REVISION

PermaFix®
environmental services
A Nuclear Services and Waste Management Company

DATE	
DRAWN	
CHECKED	
DFTG APVD	
ENGR	
APVD	
OTHER	
QA	
APPVD FOR IMPLEMENTATION BY	
FOR DATE	

MIXED WASTE FACILITY
BUILDING 13

P&ID
2ND STAGE SYNGAS PROCESS
(GV-06) HEPA'S

SCALE: NONE | SH 4

31001-P-076 | REV 3

Copy
Review & Recycle

GV-07 SYSTEM REMOVED

5 DRAWING REMOVED FROM PERMIT

REV	DATE	BY	CHECKED	APPROVED	DESCRIPTION
5	6/17/14	SDN			PERMIT MODIFICATION REQUEST 135
4	3/30/01	RM	~~RAM~~	FF	AS-BUILT PER 31001-DCA-0030
3	2/16/00	FF	JM	FF	~~CHANGES PER 31001-DCN-0036~~
2	11/3/99	JM	PEB	FF	CHANGES PER 31001-DCA-005
1	3/18/98	JM	PEB	FF	DELETE HEAT RECOVERY BOILER
0	2/16/98	ECE	ATG	FF	ISSUE FOR TSCA/RCRA PERMIT APPLICATION

REVISION

PermaFix®
environmental services
A Nuclear Services and Waste Management Company

DATE	
DRAWN	
CHECKED	
DFTG APVD	
ENGR	
APVD	
OTHER	
QA	
APPVD FOR IMPLEMENTATION BY	
FOR DATE	

MIXED WASTE FACILITY
BUILDING 13

P&ID
3RD STAGE SYNGAS
(GV-07) CONVERTER

SCALE: NONE | SH 1

31001-P-077 | REV 5

Copy
Review & Recycle

GV-07 SYSTEM REMOVED

5

5

DRAWING REMOVED
FROM PERMIT

REV	DATE	BY	CHECKED	APPROVED	DESCRIPTION
5	6/17/14	SDN			PERMIT MODIFICATION REQUEST 135
4	3/30/01	RM	~~RAM~~	FF	AS-BUILT PER 31001-DCA-0030
3	2/16/00	FF	JM	~~FF~~	~~CHANGES PER 31001-DCN-0036~~
2	11/3/99	JM	PEB	FF	CHANGES PER 31001-DCA-005
1	3/16/98	JM	PEB	FF	DELETE HEAT RECOVERY BOILER
0	2/16/98	ECE	ATG	FF	ISSUE FOR TSCA/RCRA PERMIT APPLICATION

REVISION

PermaFix®
environmental services
A Nuclear Services and Waste Management Company

DATE	
DRAWN	
CHECKED	
DFTG APVD	
ENGR	
APVD	
OTHER	
QA	
APPVD FOR IMPLEMENTATION BY FOR DATE	

MIXED WASTE FACILITY
BUILDING 13

P&ID
3RD STAGE SYNGAS
(GV-07) CONVERTER

SCALE: NONE | SH 2

31001-P-077 | REV 5

Copy
Review & Recycle

GV-08 SYSTEM REMOVED

3

3

DRAWING REMOVED
FROM PERMIT

REV	DATE	BY	CHECKED	APPROVED	DESCRIPTION
3	6/17/14	SDN			~~PERMIT MODIFICATION REQUEST 135~~
2	3/30/01	RM	RAM	FF	AS-BUILT PER 31001-DCA-0030
1	6/17/98	CDS	FM	PEB	ADDITION OF DRAWING COORDINATES
0	2/16/98	–	JES	FF	ISSUED FOR CONSTRUCTION

REVISION

PermaFix®
environmental services
A Nuclear Services and Waste Management Company

DATE	
DRAWN	
CHECKED	
DFTG APVD	
ENGR	
APVD	
OTHER	
QA	
APPVD FOR IMPLEMENTATION BY	
FOR DATE	

MIXED WASTE FACILITY
BUILDING 13

P&ID
GAS SAMPLING (GV-08)
GAS ANALYSIS SYSTEM

SCALE: NONE | SH

31001-P-078 | REV 3

Copy
Review & Recycle

THIS PORTION OF THE GV-09 SYSTEM WAS REMOVED

3

3 DRAWING REMOVED FROM PERMIT

REV	DATE	BY	CHECKED	APPROVED	DESCRIPTION
3	6/17/14	SDN			~~PERMIT MODIFICATION REQUEST 135~~
2	3/30/01	RM	RAM	FF	AS-BUILT PER 31001-DCA-0030
1	7/16/98	ECE	ATG	FF	EDITORIAL CHANGES
0	2/16/98	ECE	ATG	FF	ISSUE FOR TSCA/RCRA PERMIT APP

REVISION

PermaFix®
environmental services
A Nuclear Services and Waste Management Company

DATE	
DRAWN	
CHECKED	
DFTG APVD	
ENGR	
APVD	
OTHER	
QA	
APPVD FOR IMPLEMENTATION BY FOR DATE	

MIXED WASTE FACILITY
BUILDING 13

P&ID
PROCESS VENT SYSTEM
GV-09

SCALE: NONE | SH 1

31001-P-079 | REV 3

Copy
Review & Recycle

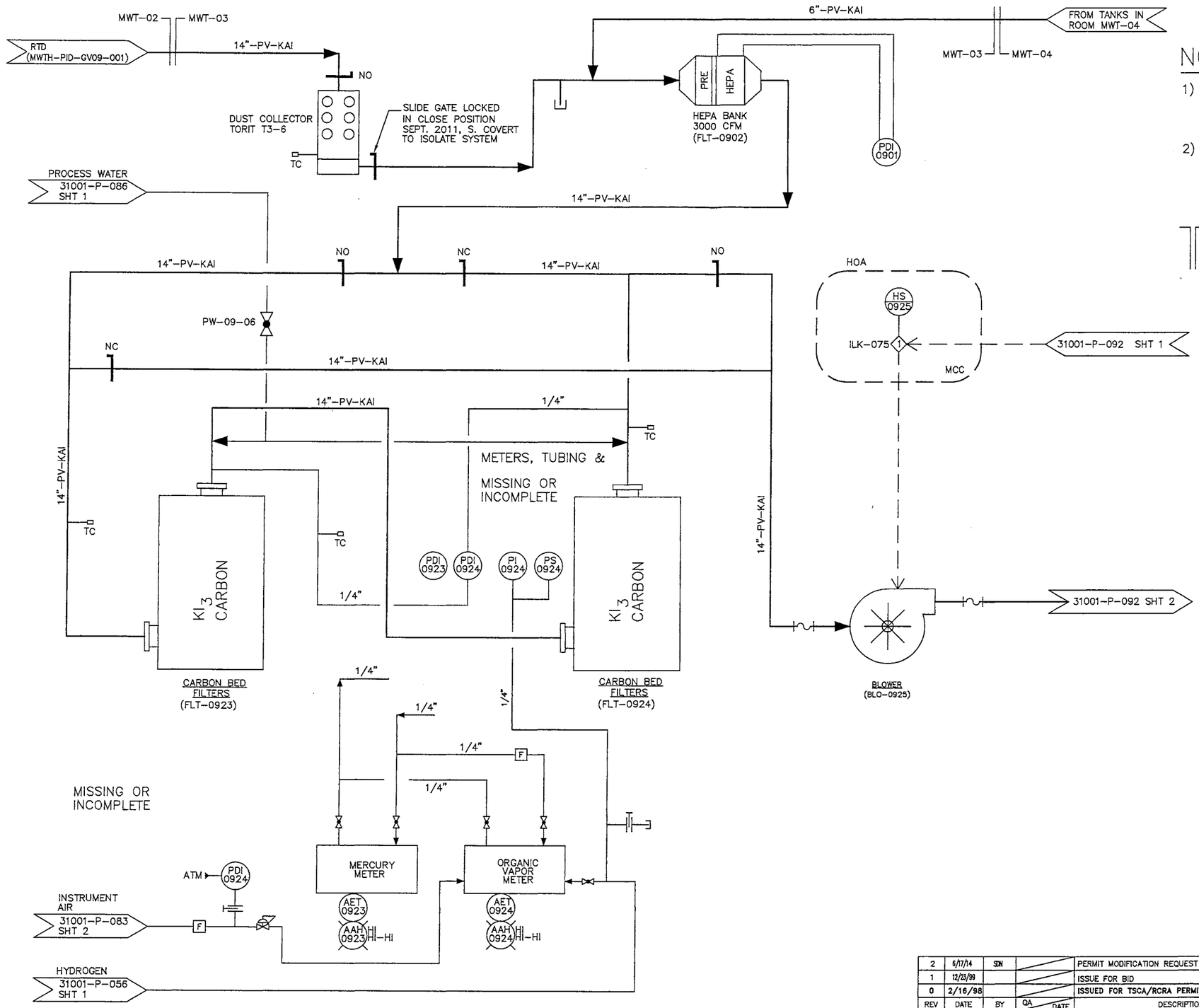

NOTES:

1) All equipment on this sheet is part of the Mixed Waste Thermal (MWTH) system and originally had the prefix GV-09.

2) Piping material designations:
KAI: (K) 316L Stainless Steel 10 Guage,
(A) Atmospheric Material pressure rating,
(I) Seal weld pipe joint.

— ROOM CALLOUT

ROBERT JOHN SCHREIBER
STATE OF WASHINGTON
32740
REGISTERED
PROFESSIONAL ENGINEER

REV	DATE	BY	QA	DATE	DESCRIPTION
2	6/17/14	SZN			PERMIT MODIFICATION REQUEST 135
1	12/23/99				ISSUE FOR BID
0	2/16/98				ISSUED FOR TSCA/RCRA PERMIT APPLICATION

REVISION

PermaFix® environmental services
A Nuclear Services and Waste Management Company

DATE	
DRAWN	
CHECKED	
DFTG APVD	
ENGR	
APVD	
OTHER	
QA	
APPVD FOR IMPLEMENTATION BY	
FOR DATE	

MIXED WASTE FACILITY
BUILDING 13
MWTH

PIPING AND INSTRUMENTATION DIAGRAM
PROCESS VENT SYSTEM (GV-09)

SCALE: NONE | SHEET NO. 2

31001-P-079 | REV 2

Copy 1
Review & Recycle

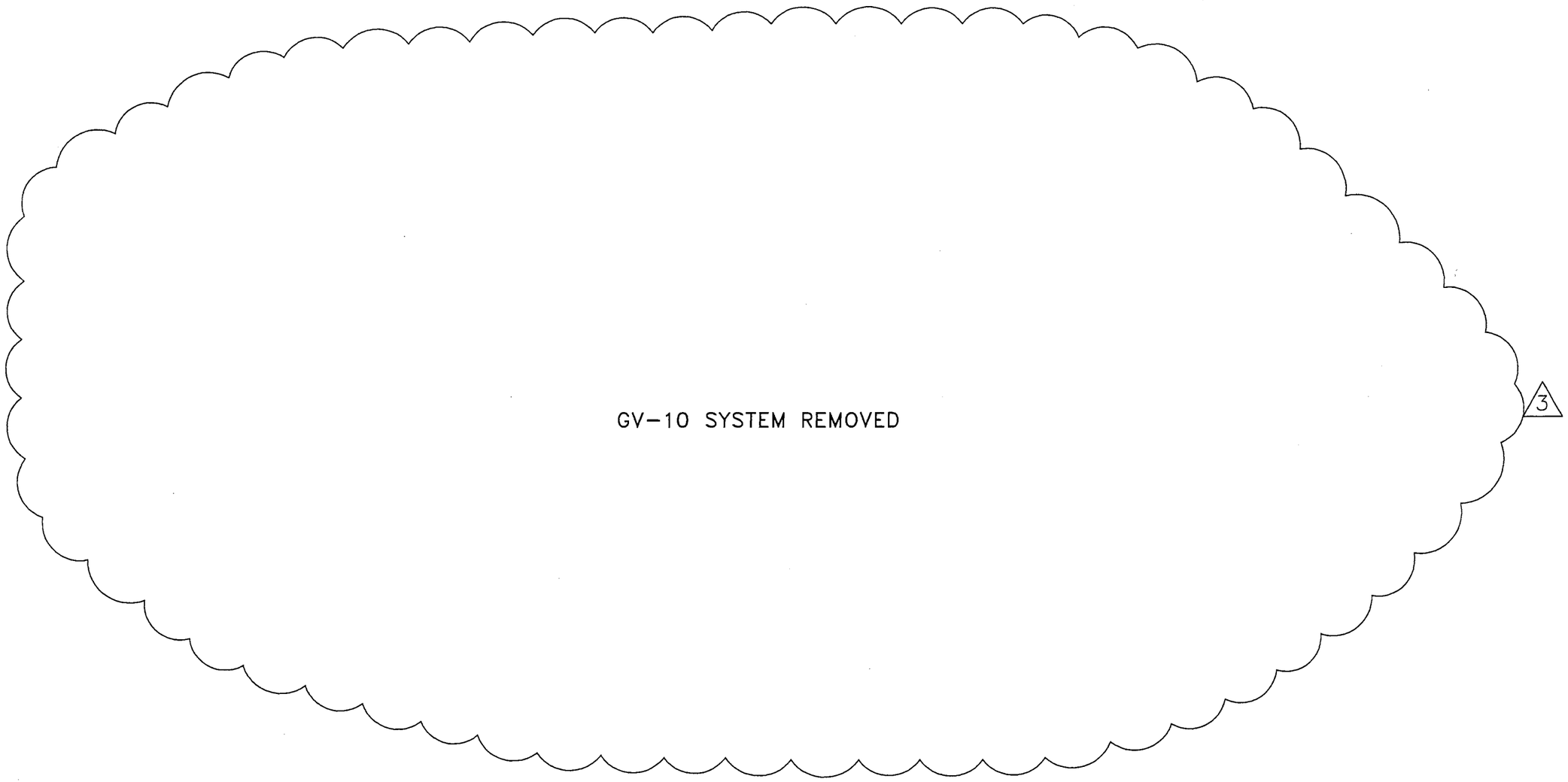

3 DRAWING REMOVED FROM PERMIT

REV	DATE	BY	CHECKED	APPROVED	DESCRIPTION
3	6/23/14	SDN	RAM		~~PERMIT MODIFICATION REQUEST 135~~
2	3/30/01	RM	RAM	FF	AS-BUILT PER 31001-DCA-0030
1	11/5/99	ECE	ATG	FF	CHANGES PER 31001-DCA-006
0	2/16/98	ECE	ATG	FF	ISSUE FOR TSCA/RCRA PERMIT APP

REVISION

PermaFix®
environmental services
A Nuclear Services and Waste Management Company

DATE	
DRAWN	
CHECKED	
DFTG APVD	
ENGR	
APVD	
OTHER	
QA	
APPVD FOR IMPLEMENTATION BY	
FOR DATE	

MIXED WASTE FACILITY
BUILDING 13

INSTRUMENTATION & CONTROLS
FEED CONTROL
GV-10

SCALE: NONE | SH 1

31001-P-080 | REV 3

Copy
Review & Recycle

GV-10 SYSTEM REMOVED

7

7 DRAWING REMOVED FROM PERMIT

REV	DATE	BY	CHECKED	APPROVED	DESCRIPTION
7	6/23/14	SDN			PERMIT MODIFICATION REQUEST 135
6	3/30/01	RM	RAM	FF	AS-BUILT PER 31001-DCA-0030
5	1/22/01	WS	RM	FF	CHANGES PER 31001-DCN-0071
4	12/4/00	WS	RM	FF	CHANGES PER 31001-DCN-0024
3	2/16/00	FF	JM	FF	CHANGES PER 31001-DCN-0035
2	11/5/99	ECE	ATG	FF	CHANGES PER 31001-DCA-006
1	3/16/98	ECE	ATG	FF	DELETE HEAT RECOVERY BOILER
0	2/16/98	ECE	ATG	FF	ISSUE FOR TSCA/RCRA PERMIT APP

REVISION

PermaFix®
environmental services
A Nuclear Services and Waste Management Company

DATE	
DRAWN	
CHECKED	
DFTG APVD	
ENGR	
APVD	
OTHER	
QA	
APPVD FOR IMPLEMENTATION BY_____ FOR DATE	

MIXED WASTE FACILITY
BUILDING 13

INSTRUMENTATION & CONTROLS
AWFCO
GV-10

SCALE: NONE | SH 2

31001-P-080 | REV 7

Copy
Review & Recycle

GV-11 SYSTEM REMOVED

5

5

DRAWING REMOVED
FROM PERMIT

REV	DATE	BY	CHECKED	APPROVED	DESCRIPTION
5	6/23/14	SDN			PERMIT MODIFICATION REQUEST 135
4	3/30/01	JA	RAM	FF	AS-BUILT PER 31001-DCA-0030
3	6/28/00	CR	WJS	FF	ISSUED PER 31001-DCA-0019
2	6/15/00	CR	WJS	FF	~~ISSUED PER DCA 31001-DCA-0018~~
1	6/17/98	–	JM	PEB	ADDITION OF DWG COORDINATES, EDITORIAL CHANGE FROM STEAM HEAT TO NATURAL GAS
0	2/16/98	–	JM	PEB	ISSUE FOR TSCA/RCRA PERMIT APPLICATION

REVISION

PermaFix®
environmental services
A Nuclear Services and Waste Management Company

DATE	
DRAWN	
CHECKED	
DFTG APVD	
ENGR	
APVD	
OTHER	
QA	
APPVD FOR IMPLEMENTATION BY	
FOR DATE	

MIXED WASTE FACILITY
BUILDING 13

P&ID
SECONDARY
WASTE TREATMENT (GV-11)

SCALE: NONE | SH 1

31001-P-081 | REV 5

Copy
Review & Recycle

GV-12 SYSTEM REMOVED

3 DRAWING REMOVED FROM PERMIT

REV	DATE	BY	CHECKED	APPROVED	DESCRIPTION
3	6/23/14	SDN			~~PERMIT MODIFICATION REQUEST 135~~
2	3/30/01	RM	RAM	FF	AS-BUILT PER 31001-DCA-0030
1	6/17/98	ECE	ATG	FF	EDITORIAL CHANGES
0	2/16/98	ECE	ATG	FF	ISSUE FOR TSCA/RCRA PERMIT APP

REVISION

PermaFix®
environmental services
A Nuclear Services and Waste Management Company

DATE	
DRAWN	
CHECKED	
DFTG APVD	
ENGR	
APVD	
OTHER	
QA	
APPVD FOR IMPLEMENTATION BY FOR DATE	

MIXED WASTE FACILITY
BUILDING 13

P&ID
CAUSTIC ADDITION
GV-12

SCALE: NONE SH 1

31001-P-082 REV 3

Copy
Review & Recycle

NOTES:

1. ALL ID NUMBERS SHOWN ON THIS SHEET HAVE A PREFIX OF GV-13, UNLESS NOTED OTHERWISE.

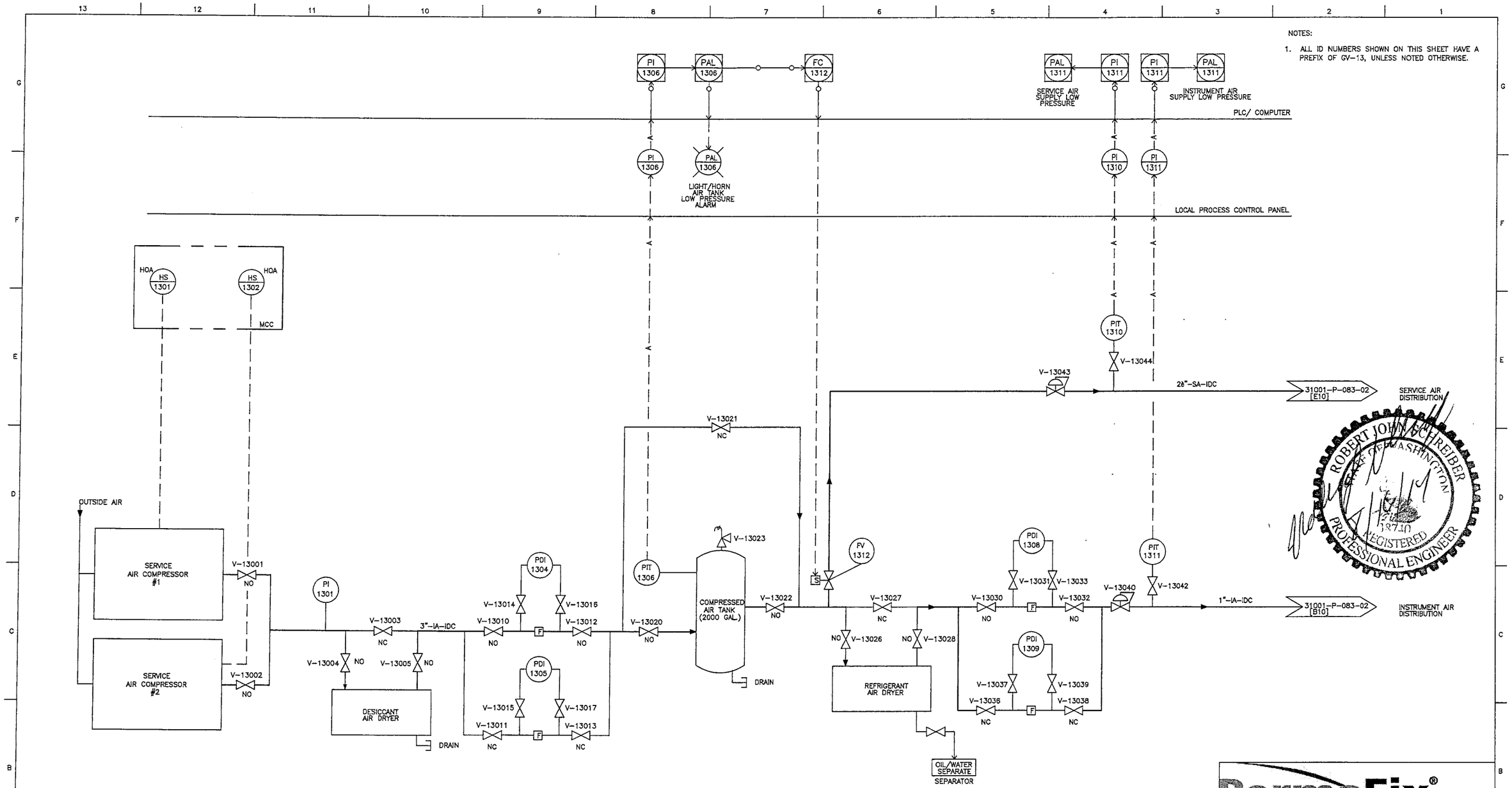

SERVICE AIR COMPRESSOR #1 (CMP-1301)

SERVICE AIR COMPRESSOR #2 (CMP-1302)

DESICCANT AIR DRYER (DR-1303)

AIR FILTER #1 (FLT-1304)

AIR FILTER #2 (FLT-1305)

COMPRESSED AIR TANK (TK-1306)

REFRIGERANT AIR DRYER (DR-1307)

INSTRUMENT AIR FILTER #1 (FLT-1308)

INSTRUMENT AIR FILTER #2 (FLT-1309)

REV	DATE	BY	CHECKED	APPROVED	DESCRIPTION
2	5/27/14	SDN			PERMIT MODIFICATION REQUEST 135
1	6/17/98	ECE	ATG	FF	ADDITION OF DRAWING COORDINATES
0	2/16/98	ECE	ATG	FF	ISSUE FOR TSCA/RCRA PERMIT APP

REVISION

PermaFix® environmental services
A Nuclear Services and Waste Management Company

DATE	
DRAWN	
CHECKED	
DFTG APVD	
ENGR	
APVD	
OTHER	
QA	
APPVD FOR IMPLEMENTATION BY	
FOR DATE	

2 MIXED WASTE FACILITY

P&ID
SERVICE/INSTRUMENT AIR
GV-13

SCALE: NONE | SH 1

31001-P-083 | REV 2

ROBERT JOHN SCHREIBER
STATE OF WASHINGTON
13740
REGISTERED PROFESSIONAL ENGINEER

Copy
Review & Recycle

NOTES:

1. ALL ID NUMBERS SHOWN ON THIS SHEET HAVE A PREFIX OF GV-13.

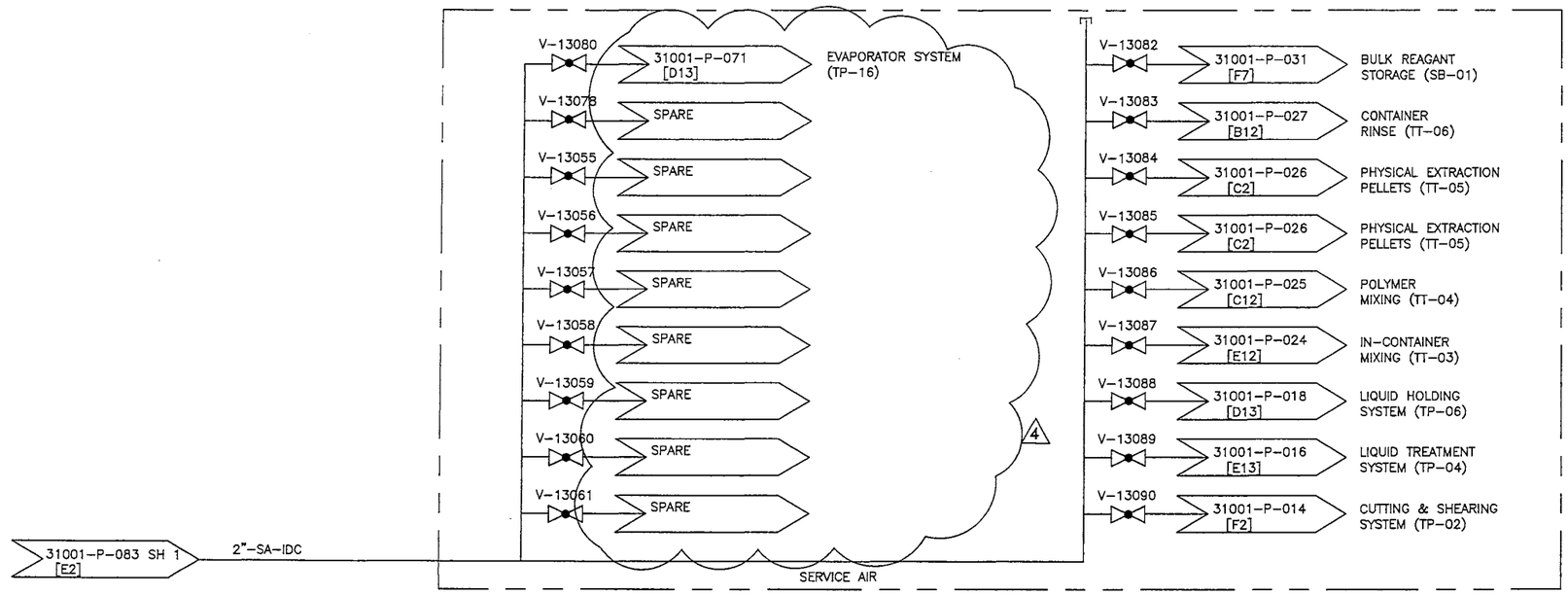

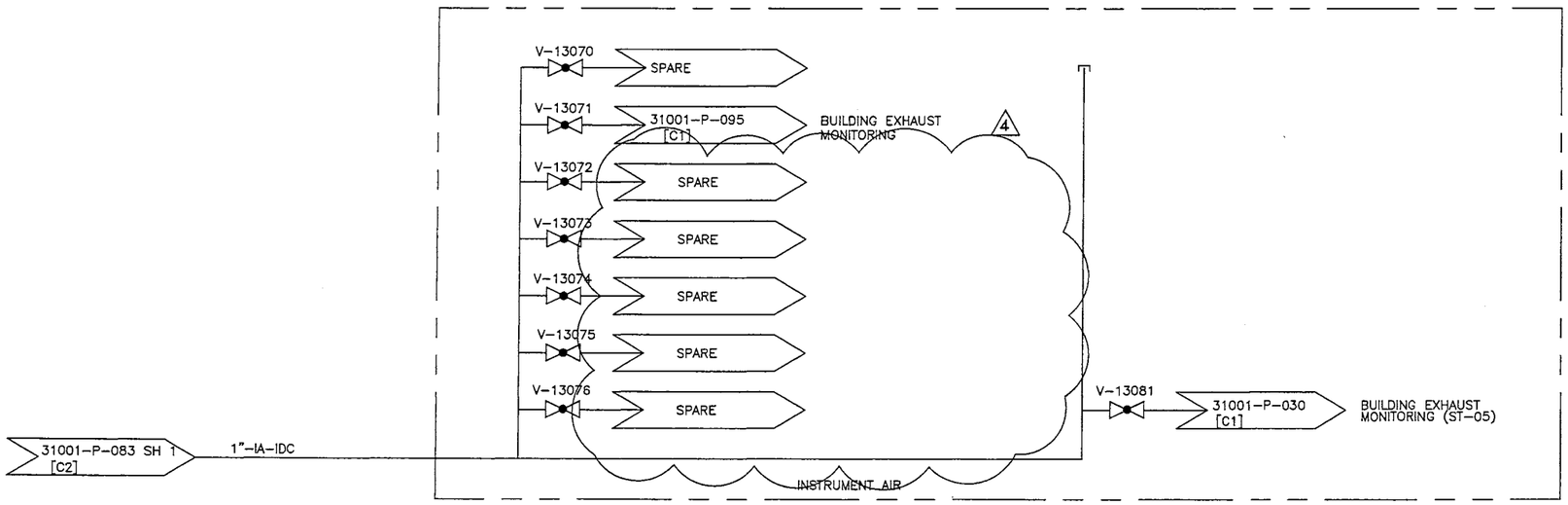

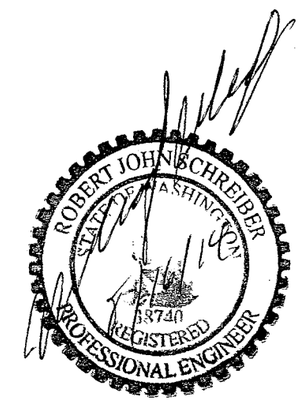

REV	DATE	BY	CHECKED	APPROVED	DESCRIPTION
4	6/24/14	SDN			PERMIT MODIFICATION REQUEST 135
3	3/30/01	RM	RAM	FF	AS-BUILT PER 31001-DCA-0030
2	6/17/98	ECE	ATG	FF	EDITORIAL CHANGES
1	3/16/98	ECE	ATG	FF	DELETE HEAT RECOVERY BOILER
0	2/16/98	ECE	ATG	FF	ISSUE FOR TSCA/RCRA PERMIT APP

REVISION

PermaFix® environmental services
A Nuclear Services and Waste Management Company

DATE	
DRAWN	
CHECKED	
DFTG APVD	
ENGR	
APVD	
OTHER	
QA	
APPVD FOR IMPLEMENTATION BY FOR DATE	

MIXED WASTE FACILITY
BUILDING 13

P&ID
SERVICE/INSTRUMENT AIR
GV-13

SCALE: NONE | SH 2

31001-P-083 | REV 4

Copy
Review & Recycle

NOTES:

1. ALL ID NUMBERS SHOWN ON THIS SHEET HAVE A PREFIX OF GV-15, UNLESS NOTED OTHERWISE.

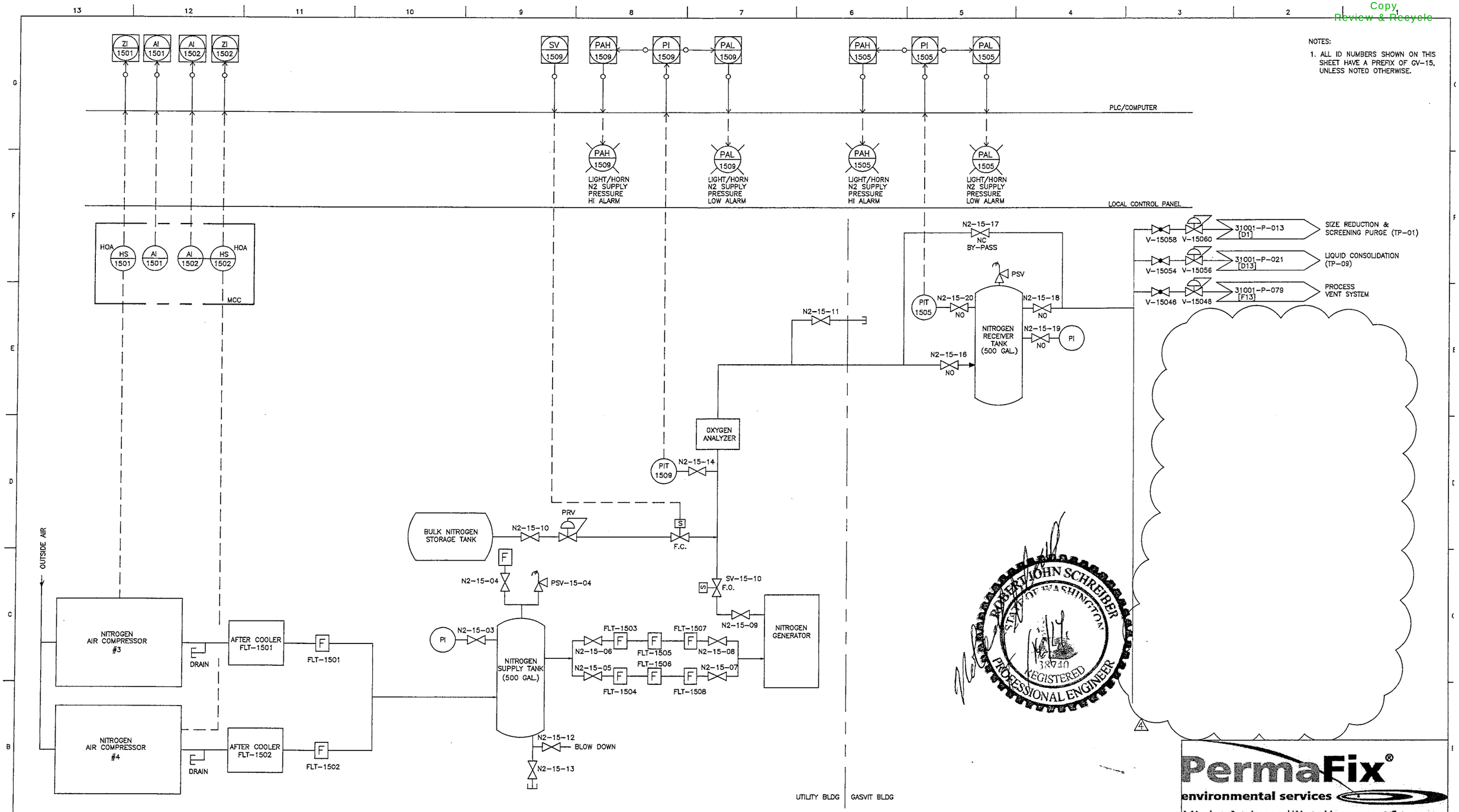

REV	DATE	BY	CHECKED	APPROVED	DESCRIPTION
4	6/24/14	SDN			PERMIT MODIFICATION REQUEST 135
3	3/30/01	RM	RAM	FF	AS-BUILT PER 31001-OCA-0030
2	6/17/98	ECE	ATG	FF	EDITORIAL CHANGES
1	3/16/98	ECE	ATG	FF	DELETE HEAT RECOVERY BOILER
0	2/16/98	ECE	ATG	FF	ISSUE FOR TSCA/RCRA PERMIT APP

REVISION

PermaFix®
environmental services
A Nuclear Services and Waste Management Company

DATE	
DRAWN	
CHECKED	
DFTG APVD	
ENGR	
APVD	
OTHER	
QA	
APPVD FOR IMPLEMENTATION BY	
FOR DATE	

MIXED WASTE FACILITY
BUILDING 13

P&ID
NITROGEN SUPPLY
GV-15

SCALE: NONE | SH 1

31001-P-085 | REV 4

Copy
Review & Recycle

NOTES:

1. ALL ID NUMBERS SHOWN ON THIS SHEET HAVE A PREFIX OF GV-16, UNLESS NOTED OTHERWISE.

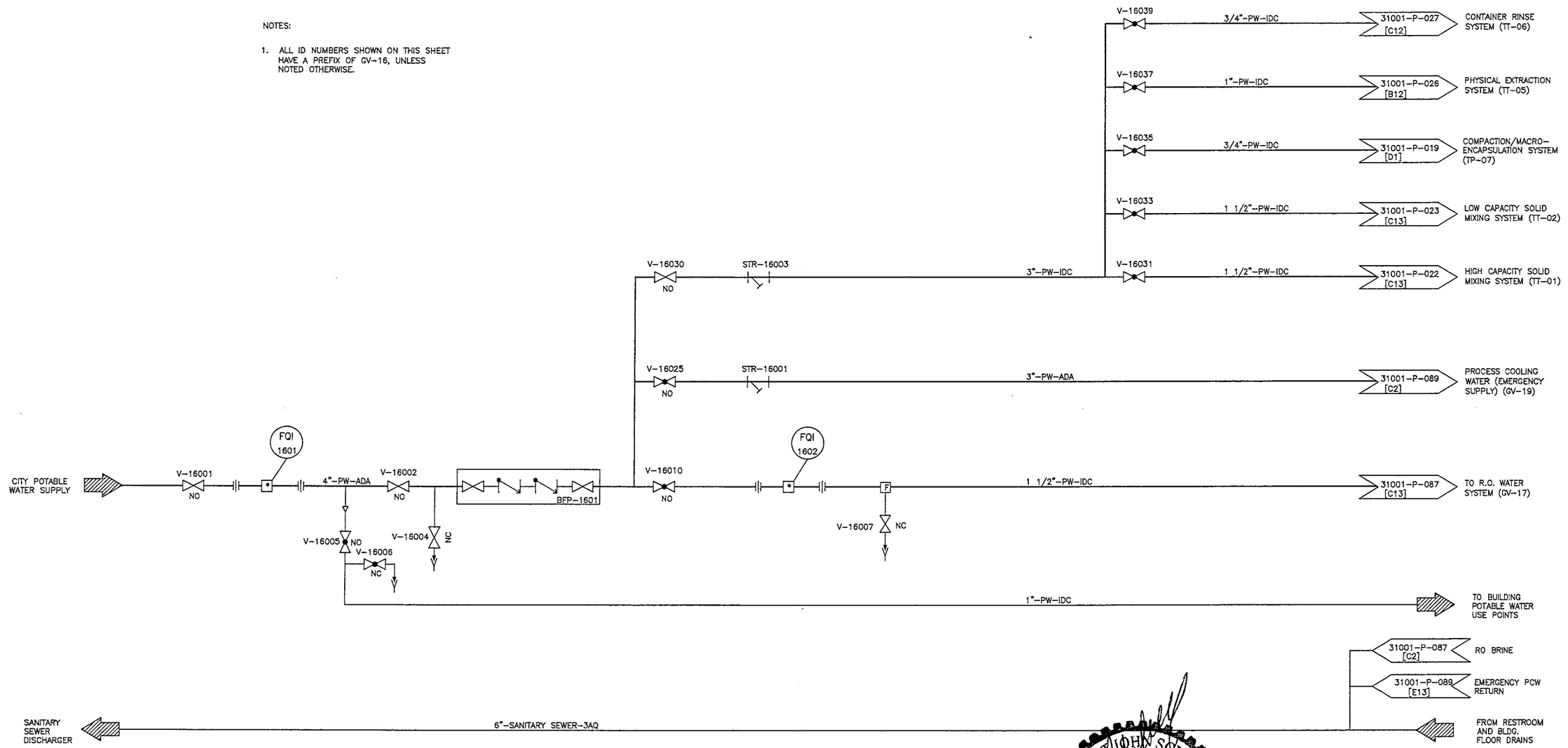

ROBERT JOHN SCHREIBER
STATE OF WASHINGTON
REGISTERED
PROFESSIONAL ENGINEER

REV	DATE	BY	QA	DATE	DESCRIPTION
3	8/13/14	SDN			PERMIT MODIFICATION REQUEST 135
2	3/30/01	RM			AS-BUILT PER 31001-DCA-D030
1	6/17/98	ECE			EDITORIAL CHANGES
0	2/16/98	ECE			ISSUE FOR TSCA/RCRA PERMIT APP

REVISION

PermaFix®
environmental services
A Nuclear Services and Waste Management Company

DATE	
DRAWN	
CHECKED	
DFTG APVD	
ENGR	
APVD	
OTHER	
QA	
APPVD FOR IMPLEMENTATION BY	
FOR DATE	

MIXED WASTE FACILITY
BUILDING 13
3
P&ID
PROCESS WATER SUPPLY
GV-16

SCALE: NONE | SHEET NO. 1
DWG. NO. 31001-P-086 | REV 3

Copy
Review & Recycle

NOTES:
1. ALL ID NO'S ON THIS SHEET HAVE A PREFIX OF GV-17, UNLESS NOTED OTHERWISE.
2. HYDROPNEUMATIC TANK LOGIC DESCRIPTION:
   A. PS-1712 AND PS-1711 SHALL MAINTAIN TANK AIR PRESSURE AT 50-85 PSI. WHEN TANK PRESSURE REACHES 50 PSI, SV-1714 SHALL OPEN. WHEN TANK PRESSURE REACHES 85 PSI, SV-1714 SHALL CLOSE. SV-1714 SHALL OPEN ONLY WHEN LAL-1713 IS NOT ACTIVATED AND PUMP PMP-1706 IS OFF.
   B. WHEN WATER IN TANK DROPS BELOW LOW-LEVEL LAL-1713 AND PMP-1706 MUST BE STARTED.
   C. PMP-1706 SHUTS OFF WHEN HIGH PRESSURE ALARM PAH-1710 (SET @ 90 PSI) IS ACTIVATED.
   D. SV-1713 SHALL OPEN WHEN THE R.O. WATER HEADER DROPS BELOW 35 PSI.

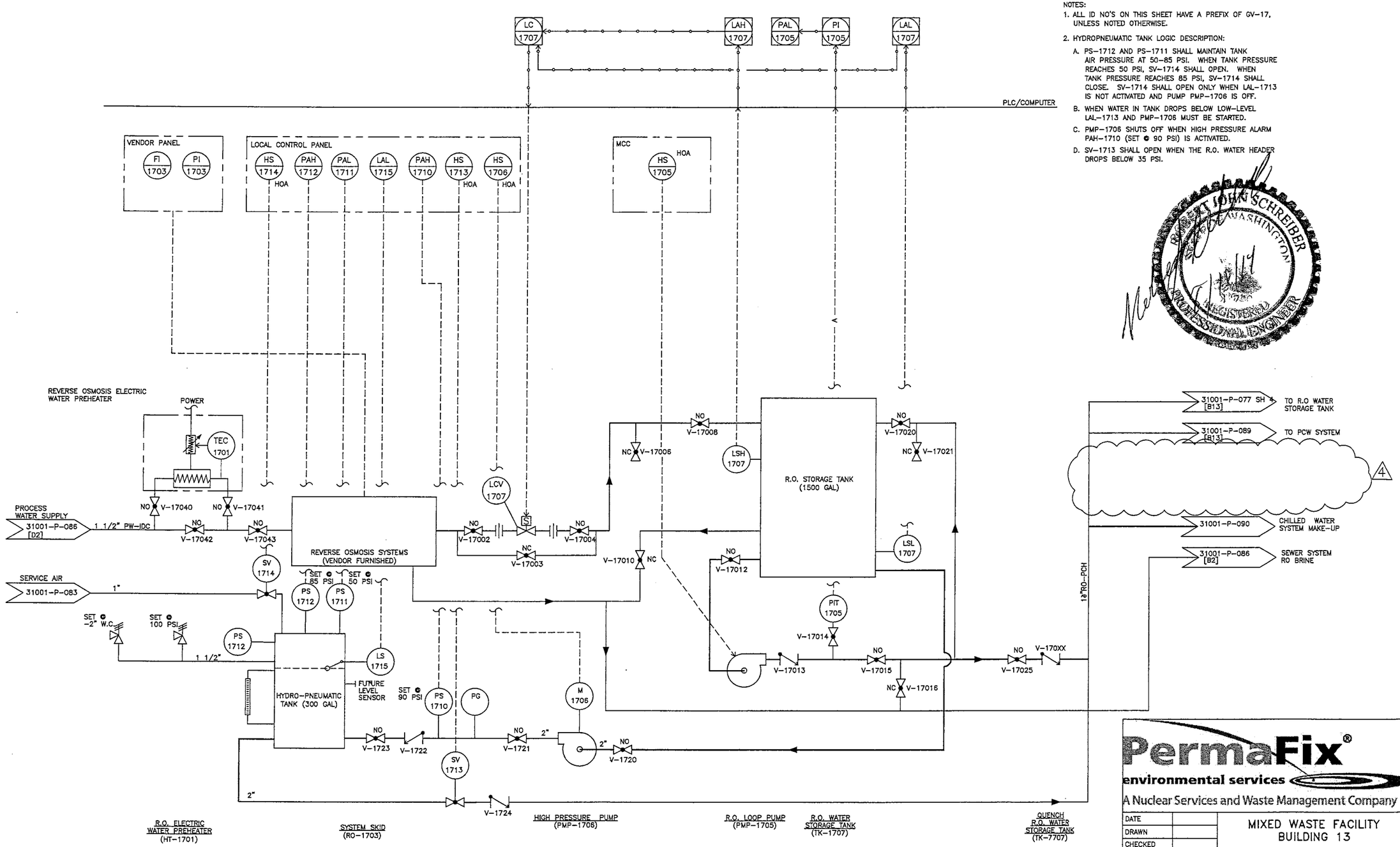

REV	DATE	BY	CHECKED	APPROVED	DESCRIPTION
4	6/23/14	SDN	RAM		PERMIT MODIFICATION REQUEST 135
3	3/30/01	RM	RAM	FF	AS-BUILT PER 31001-DCA-0030
2	6/17/98	ECE	ATG	FF	EDITORIAL CHANGES
1	3/16/98	ECE	ATG	FF	DELETE HEAT RECOVERY BOILER
0	2/16/98	ECE	ATG	FF	ISSUE FOR TSCA/RCRA PERMIT APP

REVISION

PermaFix® environmental services
A Nuclear Services and Waste Management Company

DATE	
DRAWN	
CHECKED	
DFTG APVD	
ENGR	
APVD	
OTHER	
QA	
APPVD FOR IMPLEMENTATION BY FOR DATE	

MIXED WASTE FACILITY
BUILDING 13

P&ID
R.O. WATER SUPPLY
GV-17

SCALE: NONE | SH 1

31001-P-087 | REV 4

Copy
Review & Recycle

GV-16 SYSTEM REMOVED

3

3

DRAWING REMOVED
FROM PERMIT

REV	DATE	BY	CHECKED	APPROVED	DESCRIPTION
3	6/24/14	SDN			~~PERMIT MODIFICATION REQUEST 135~~
2	3/30/01	RM	RAM	FF	AS-BUILT PER 31001-DCA-0030
1	6/17/98	ECE	ATG	FF	EDITORIAL CHANGES
0	2/16/98	ECE	ATG	FF	ISSUE FOR TSCA/RCRA PERMIT APP

REVISION

PermaFix®
environmental services
A Nuclear Services and Waste Management Company

DATE	
DRAWN	
CHECKED	
DFTG APVD	
ENGR	
APVD	
OTHER	
QA	
APPVD FOR IMPLEMENTATION BY	
FOR DATE	

MIXED WASTE FACILITY
BUILDING 13

P&ID
BACKUP STEAM BOILER
GV-16

SCALE: NONE | SH 1

31001-P-088 | REV 3

Copy
Review & Recycle

GV-18 SYSTEM REMOVED

4

4 DRAWING REMOVED FROM PERMIT

REV	DATE	BY	QC	DATE	REVISION
4	8/24/14	SDN			PERMIT MODIFICATION REQUEST 135
				12/11/98	DRAWING OBSOLETE
				6/17/98	AND EDITORIAL CHANGES
3				3/16/98	DELETE HEAT RECOVERY BOILER
2				2/16/98	ISSUE FOR TSCA/RCRA PERMIT APPLICATION

PermaFix®
environmental services
A Nuclear Services and Waste Management Company

DATE	
DRAWN	
CHECKED	
DFTG APVD	
ENGR	
APVD	
OTHER	
QA	
APPVD FOR IMPLEMENTATION BY	
FOR DATE	

MIXED WASTE FACILITY
BUILDING 13

PIPING AND
INSTRUMENTATION DIAGRAM
STEAM DISTRIBUTION (GV-18)

SCALE: NONE | SHEET NO. 2

31001-P-088-02 | REV 4

Copy
Review & Recycle

NOTE:

1. ALL ID NUMBERS ON THIS SHEET HAVE A PREFIX OF GV-19, UNLESS NOTED OTHERWISE.

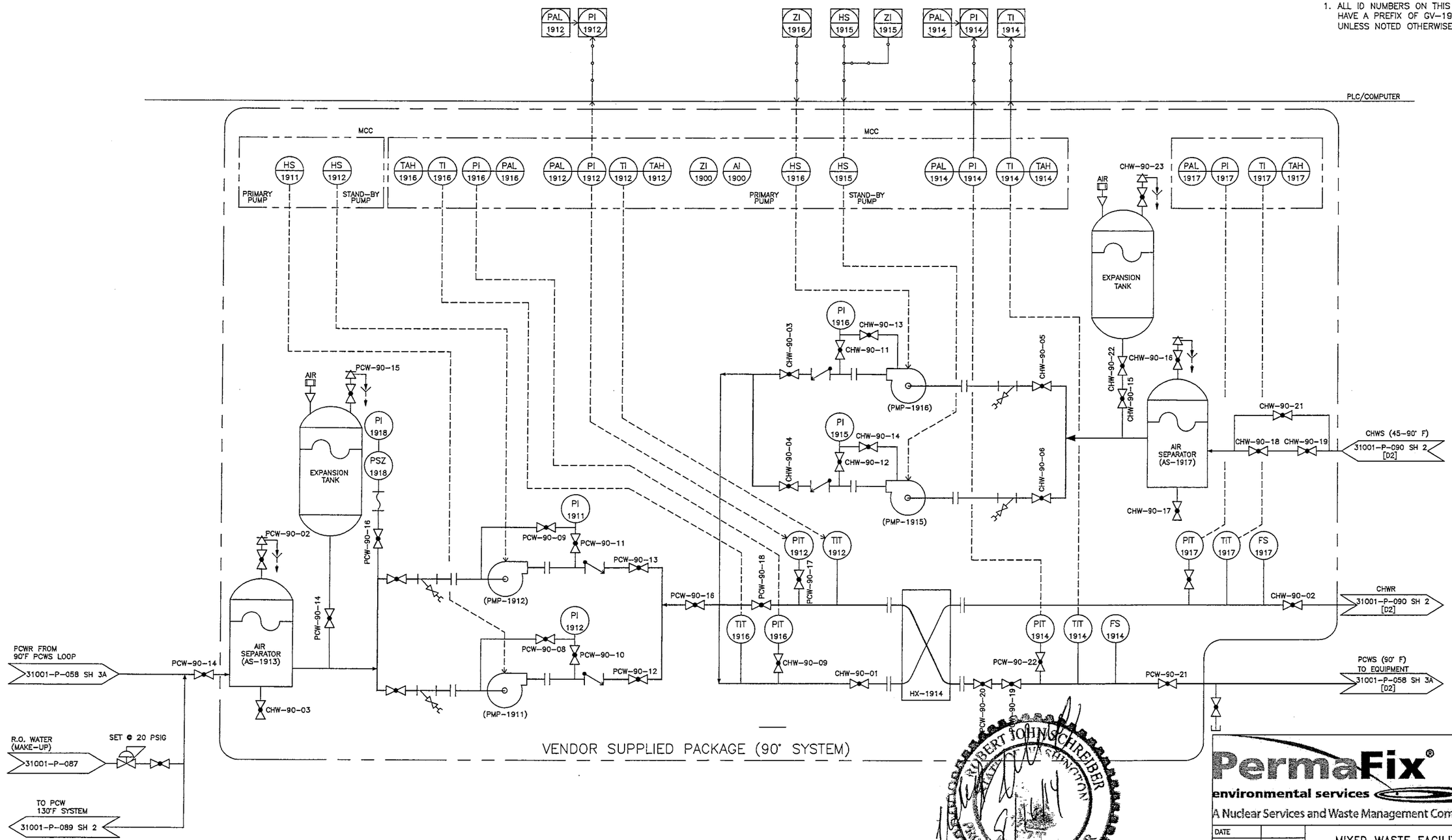

REV	DATE	BY	QA	DATE	DESCRIPTION
3	8/13/14	SDN			PERMIT MODIFICATION REQUEST 135
2	3/30/01	RM			AS-BUILT PER 31001-DCA-0030
1	12/1/98				AS-BUILT PER 31001-DCA-009
0	2/16/98	ECE			ISSUE FOR TSCA/RCRA PERMIT APP

REVISION

PermaFix® environmental services
A Nuclear Services and Waste Management Company

DATE	
DRAWN	
CHECKED	
DFTG APVD	
ENGR	
APVD	
OTHER	
QA	
APPVD FOR IMPLEMENTATION BY	
FOR	DATE

MIXED WASTE FACILITY
BUILDING 13

P&ID
PROCESS COOLING WATER
(90° F) DISTRIBUTION (GV-19)

SCALE: NONE | SHEET NO. 1
DWG. NO. 31001-P-089 | REV 3

Copy
Review & Recycle

NOTE:

1. ALL ID NUMBERS ON THIS SHEET HAVE A PREFIX OF GV-19, UNLESS NOTED OTHERWISE.

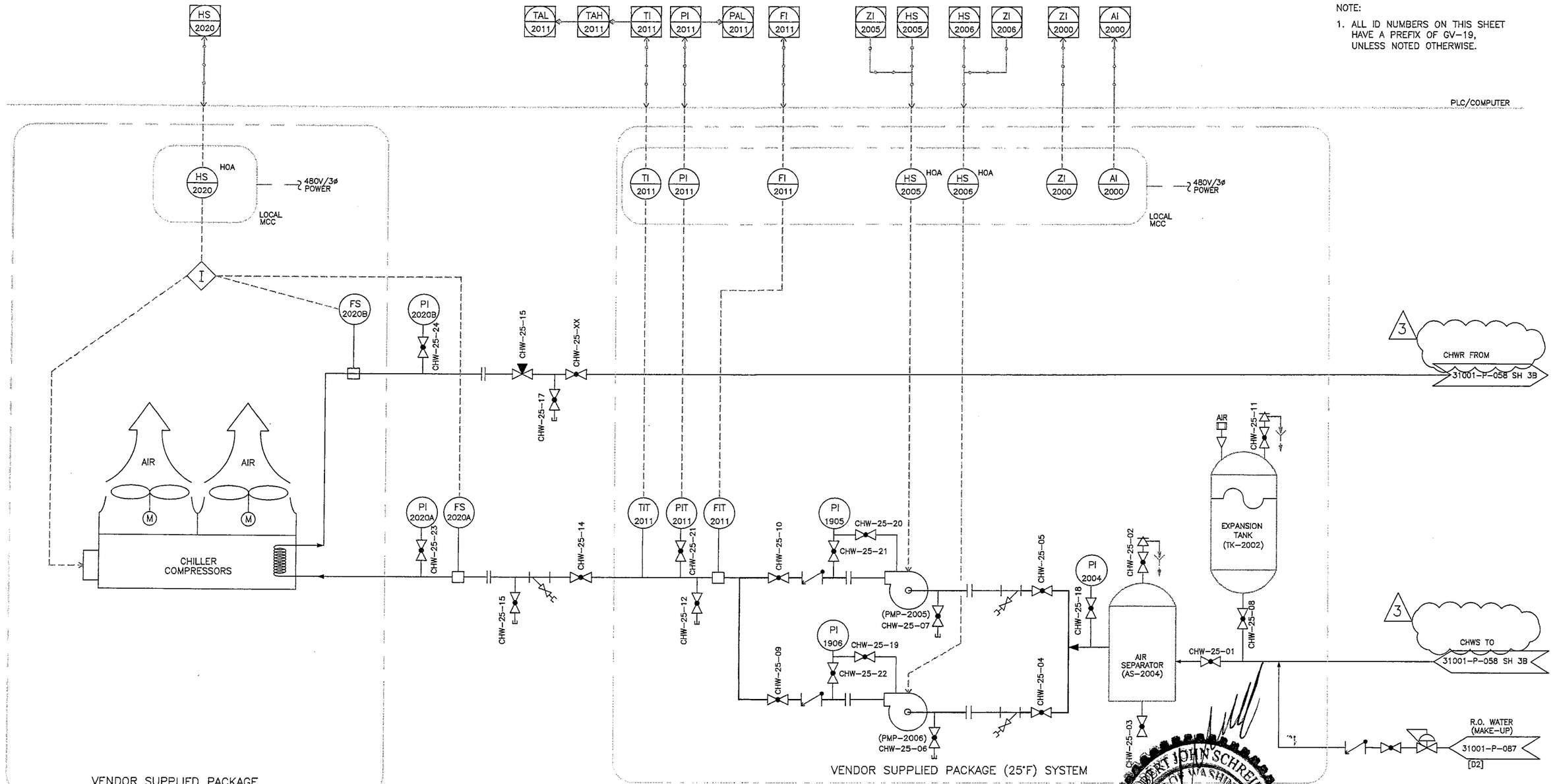

REV	DATE	BY	CHECKED	APPROVED	DESCRIPTION
3	6/25/14	SDN			PERMIT MODIFICATION REQUEST 135
2	3/30/01	RM	RAM	FF	AS-BUILT PER 31001-DCA-0030
1	12/1/98		JM		CHANGE PER 31001-DCA-009
0	2/16/98		PEB	DAS	ISSUE FOR TSCA/RCRA PERMIT APP

REVISION

DATE	
CHECKED	
DFTG APVD	
ENGR	
APVD	
OTHER	
QA	
APPVD FOR IMPLEMENTATION BY	
FOR DATE	

PermaFix® environmental services
A Nuclear Services and Waste Management Company

MIXED WASTE FACILITY
BUILDING 13

P&ID
CHILLED WATER
SYSTEM 1 (25°F) (GV-20)

SCALE: NONE | SH 1

31001-P-090 | REV 3

Copy
Review & Recycle

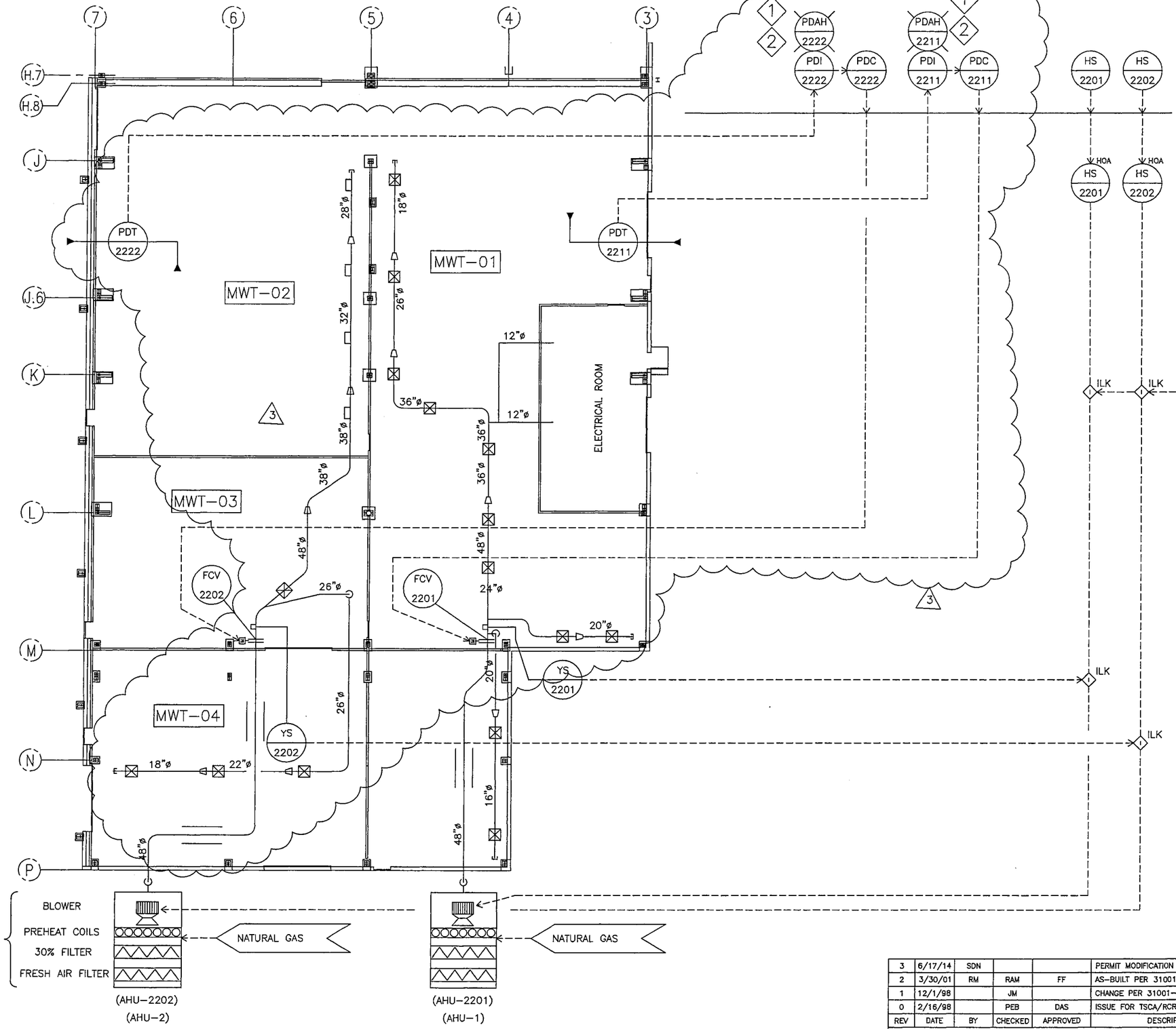

GENERAL NOTES

A. ALL ID NUMBERS ON THIS SHEET HAVE A PREFIX OF GV-22, UNLESS NOTED OTHERWISE.

1. INSUFFICIENT NEGATIVE PRESSURE RELATIVE TO OUTSIDE AMBIENT PRESSURE CAUSES THE PRESSURE CONTROL SYSTEM TO CLOSE CORRESPONDING SUPPLY AIR DAMPER. SYSTEM IS NOT OPERABLE.

2. ILK-075 STOPS PROCESS VENT GV-09 IF INSUFFICIENT NEGATIVE BUILDING PRESSURE. SYSTEM IS NOT OPERABLE.

PERMISSIVE: BUILDING EXHAUST MIN FLOW RATE.
31001-P-092 SH 2

ROBERT JOHN SCHREIBER
STATE OF WASHINGTON
REGISTERED PROFESSIONAL ENGINEER

REV	DATE	BY	CHECKED	APPROVED	DESCRIPTION
3	6/17/14	SDN			PERMIT MODIFICATION REQUEST 135
2	3/30/01	RM	RAM	FF	AS-BUILT PER 31001-DCA-0030
1	12/1/98		JM		CHANGE PER 31001-DCA-009
0	2/16/98		PEB	DAS	ISSUE FOR TSCA/RCRA PERMIT APP

REVISION

PermaFix® environmental services
A Nuclear Services and Waste Management Company

DATE	
CHECKED	
DFTG APVD	
ENGR	
APVD	
OTHER	
QA	
APPVD FOR IMPLEMENTATION BY FOR DATE	

MIXED WASTE FACILITY
BUILDING 13

P&ID
MWTH CONFINEMENT
SUPPLY AIR (GV-22)

SCALE: NONE | SH1

31001-P-092 | REV 3

Copy
Review & Recycle

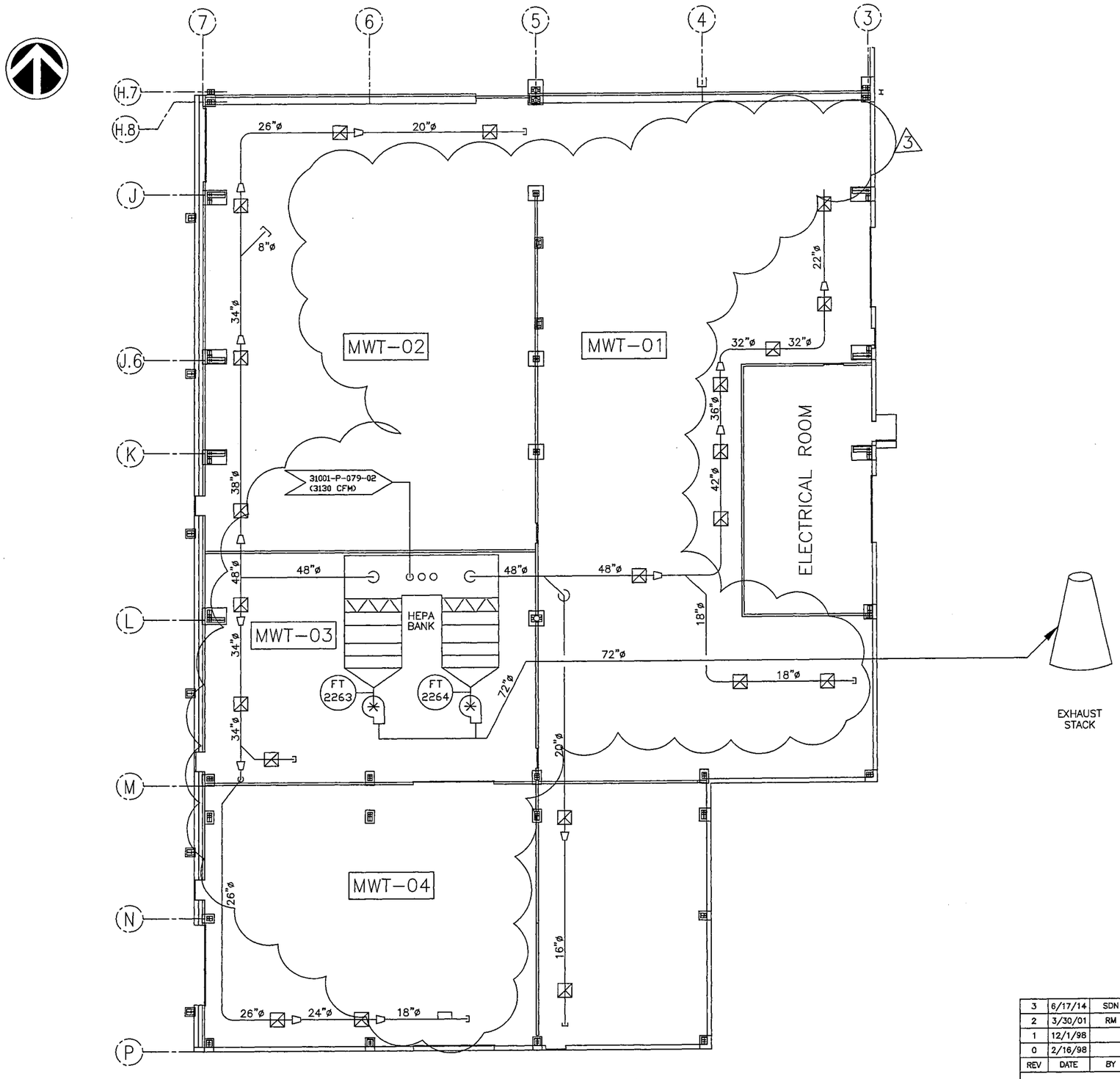

GENERAL NOTES

A. ALL ID NUMBERS ON THIS SHEET HAVE A PREFIX OF GV-22, UNLESS NOTED OTHERWISE.

ROBERT JOHN SCHREIBER
STATE OF WASHINGTON
REGISTERED
PROFESSIONAL ENGINEER

REV	DATE	BY	CHECKED	APPROVED	DESCRIPTION
3	6/17/14	SDN			PERMIT MODIFICATION REQUEST 135
2	3/30/01	RM	RAM	FF	AS-BUILT PER 31001-DCA-0030
1	12/1/98		JM		CHANGE PER 31001-DCA-009
0	2/16/98		PEB	DAS	ISSUE FOR TSCA/RCRA PERMIT APP

REVISION

PermaFix®
environmental services
A Nuclear Services and Waste Management Company

DATE		MIXED WASTE FACILITY ~~BUILDING 13~~
CHECKED		
DFTG APVD		P&ID MWTH CONFINEMENT (EXHAUST) GV-22
ENGR		
APVD		
OTHER		
QA		
APPVD FOR IMPLEMENTATION BY FOR DATE		SCALE: NONE / SH 2
		31001-P-092 / REV 3

Copy
Review & Recycle

NOTES:

1. ALL ID NUMBERS SHOWN ON THIS SHEET HAVE A PREFIX OF GV-25.

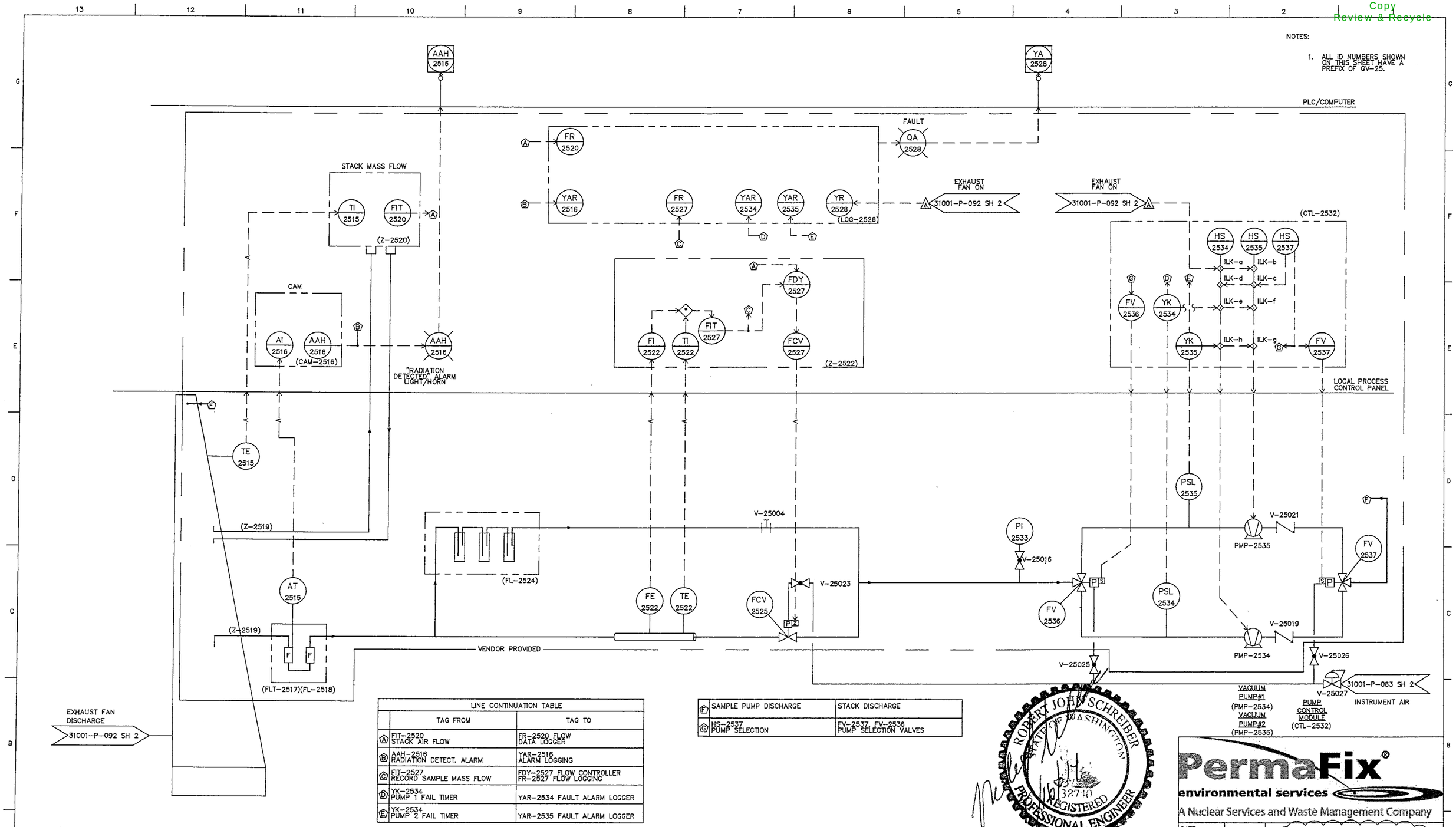

LINE CONTINUATION TABLE		
	TAG FROM	TAG TO
A	FIT-2520 STACK AIR FLOW	FR-2520 FLOW DATA LOGGER
B	AAH-2516 RADIATION DETECT. ALARM	YAR-2516 ALARM LOGGING
C	FIT-2527 RECORD SAMPLE MASS FLOW	FDY-2527 FLOW CONTROLLER FR-2527 FLOW LOGGING
D	YK-2534 PUMP 1 FAIL TIMER	YAR-2534 FAULT ALARM LOGGER
E	YK-2534 PUMP 2 FAIL TIMER	YAR-2535 FAULT ALARM LOGGER

F	SAMPLE PUMP DISCHARGE	STACK DISCHARGE
G	HS-2537 PUMP SELECTION	FV-2537, FV-2536 PUMP SELECTION VALVES

RADIATION DETECTION SENSOR/MONITOR (CAM-2516)

RECORD SAMPLE FILTER (FLT-2517)

STACK MASS FLOW METER (Z-2520)

LOW FLOW CARBON-14/TRITIUM GAS SAMPLE TRAIN (FL-2524)

RECORD SAMPLE MASS FLOW METER ISOKINETIC CONTROLLER (Z-2522)

DATA LOGGER (LOG-2528)

PRESSURE PILOT TUBE (Z-2519)

CARTRIDGE FILTER (FL-2518)

REV	DATE	BY	CHECKED	APPROVED	DESCRIPTION
3	7/15/14	SDN			PERMIT MODIFICATION REQUEST 135
2	3/30/01	RM	RAM	FF	AS-BUILT PER 31001-DCA-0030
1			JM		AS-BUILT PER 31001-DCA-009
0	2/16/98	ECE	ATG	FF	ISSUE FOR TSCA/RCRA PERMIT APP

REVISION

ROBERT JOHN SCHREIBER
STATE OF WASHINGTON
38740
REGISTERED PROFESSIONAL ENGINEER

PermaFix®
environmental services
A Nuclear Services and Waste Management Company

DATE	
DRAWN	
CHECKED	
DFTG APVD	
ENGR	
APVD	
OTHER	
QA	
APPVD FOR IMPLEMENTATION BY	
FOR DATE	

MIXED WASTE FACILITY
MWTH BUILDING

P&ID
BLDG. EXHAUST MONITORING
(GV-25)

SCALE: NONE | SH 1

31001-P-095 | REV 3

Copy
Review & Recycle

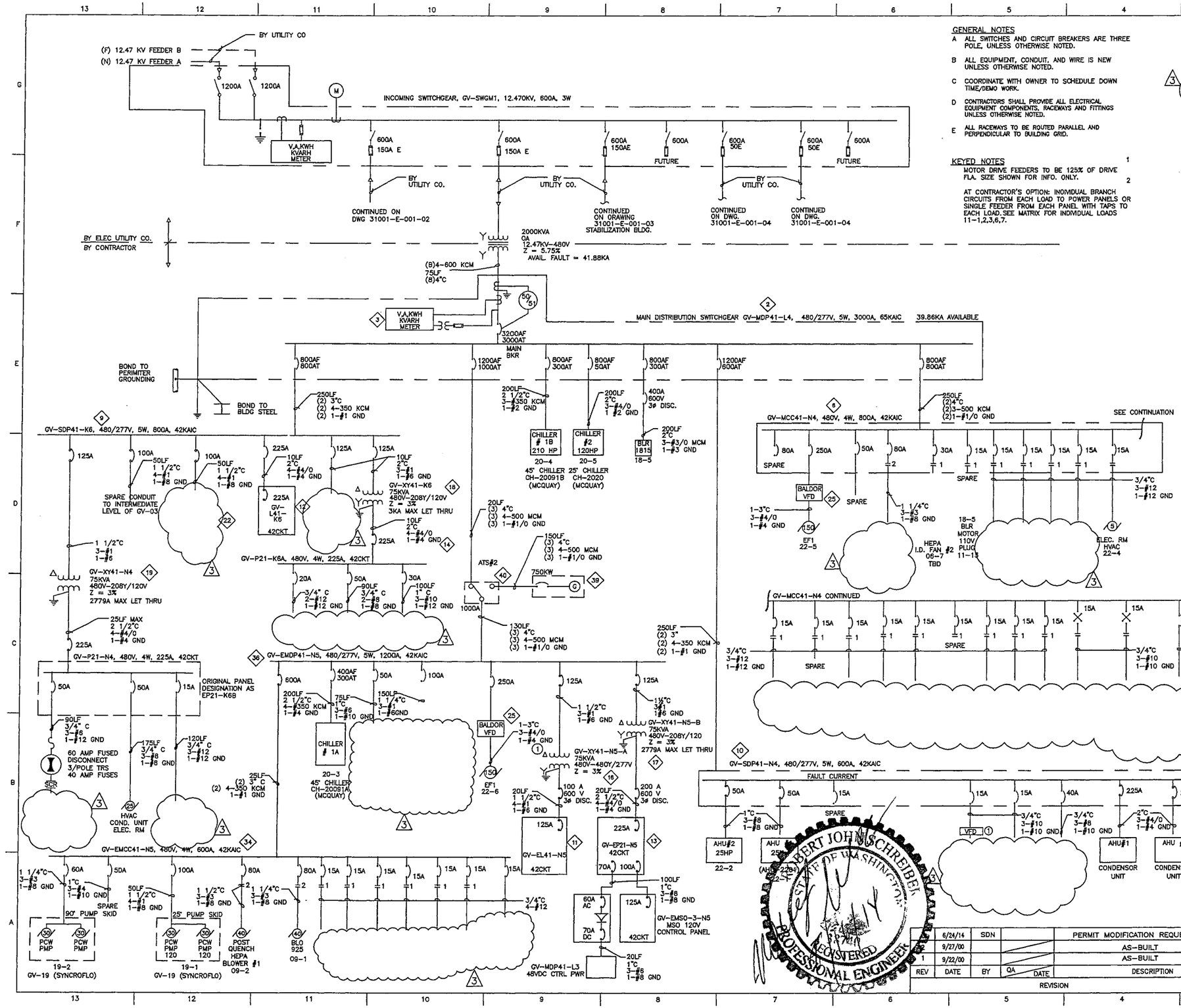

GENERAL NOTES

A ALL SWITCHES AND CIRCUIT BREAKERS ARE THREE POLE, UNLESS OTHERWISE NOTED.

B ALL EQUIPMENT, CONDUIT, AND WIRE IS NEW UNLESS OTHERWISE NOTED.

C COORDINATE WITH OWNER TO SCHEDULE DOWN TIME/DEMO WORK.

D CONTRACTORS SHALL PROVIDE ALL ELECTRICAL EQUIPMENT COMPONENTS, RACEWAYS AND FITTINGS UNLESS OTHERWISE NOTED.

E ALL RACEWAYS TO BE ROUTED PARALLEL AND PERPENDICULAR TO BUILDING GRID.

KEYED NOTES

1 MOTOR DRIVE FEEDERS TO BE 125% OF DRIVE FLA. SIZE SHOWN FOR INFO. ONLY.

2 AT CONTRACTOR'S OPTION: INDIVIDUAL BRANCH CIRCUITS FROM EACH LOAD TO POWER PANELS OR SINGLE FEEDER FROM EACH PANEL WITH TAPS TO EACH LOAD. SEE MATRIX FOR INDIVIDUAL LOADS 11-1,2,3,6,7.

LOAD CALCULATIONS FOR TOTAL GASVIT BUILDING (AS OF 1/98)

	AMPS	KW	KVA	@75% DIVERSITY
TOTAL MWTH BUILDING LOAD @ AVE FURNACE LOAD	3083.94	2176.72	2560.91	1920.68 KVA
TOTAL MWTH BUILDING LOAD @ MAX. FURNACE LOAD	4616.87	3258.77	3833.85	2875.39 KVA

REFER TO GV-23 POWER LOAD SPREAD SHEET FOR MORE DETAILS

BILL OF MATERIALS

NO.	QTY.	NAME	TAG#	SPEC.
1		SEE DWG 31001-E-001-02		
2	1	MAIN DISTRIBUTION BOARD	GV-MDP41-L4	16426
3	1	MAIN DISTRIBUTION METERING	–	–
4		SEE DWG 31001-E-001-02		
5		SEE DWG 31001-E-001-02		
6	1	600A MOTOR CONTROL CENTER	GV-MCC41-N4	–
8	1	–ITEM DELETED	–	16482
9	1	600A SUB-DISTRIBUTION PANEL	GV-SDP41-K6	16426
10	1	600A PANELBOARD	GV-SDP41-N4	16470
11	1	125A LIGHTING PANELBOARD	GV-EL41-N5	16470
12	1	225A LIGHTING PANELBOARD	GV-L41-K6	16470
13	1	225A, 120/208 PANELBOARD	GV-EP21-N5	16470
14	1	225A, 120/208 PANELBOARD	GV-P21-K6A	16470
15	1	225A, 120/208 PANELBOARD	GV-P21-N4	16470
16	1	75 KVA 480-480/277 TRANSFORMER	GV-XY41-N5-A	16461
17	1	75 KVA 480-480/277 TRANSFORMER	GV-XY41-N5-B	16461
18	1	75 KVA 480-120/208 TRANSFORMER	GV-XY41-K6	16461
19	1	75 KVA 480-120/208 TRANSFORMER	GV-XY41-N4	
20		DELETED		
21		SEE DWG 31001-E-001-02		
22	2	EXHAUST FAN VFD	–	16483
23	1	SEE DWG 31001-E-001-02		
24		SEE DWG 31001-E-001-02		
25		SEE DWG 31001-E-001-02		
26		SEE DWG 31001-E-008-03		
27		SEE DWG 31001-E-008-03		
28	1	MOTOR CONTROL CENTER, 600A	GV-EMCC41-N5	16426
29	1	1200A PANELBOARD	GV-EMDP41-N5	16482
30	1	EMER GEN 750kw	–	16622
40	1	TRANSFER SWITCH, 1000A, 4 POLE	ATS#2	16496

PermaFix® environmental services
A Nuclear Services and Waste Management Company

DATE	
DRAWN	
CHECKED	
DFTG APVD	
ENGR	
APVD	
OTHER	
QA	
APPVD FOR IMPLEMENTATION BY	
FOR DATE	

MIXED WASTE FACILITY
BUILDING 13

ELECTRICAL
ONE-LINE SCHEMATIC
(GV-23)

SCALE: NONE | SHEET NO. 1

31001-E-001-01 | REV 3

REV	DATE	BY	QA	DATE	DESCRIPTION
2	6/24/14	SDN			PERMIT MODIFICATION REQUEST 135
1	9/27/00				AS-BUILT
	9/22/00				AS-BUILT

REVISION

ROBERT JOHN SCHREIBER
STATE OF WASHINGTON
REGISTERED PROFESSIONAL ENGINEER

Copy
Review & Recycle

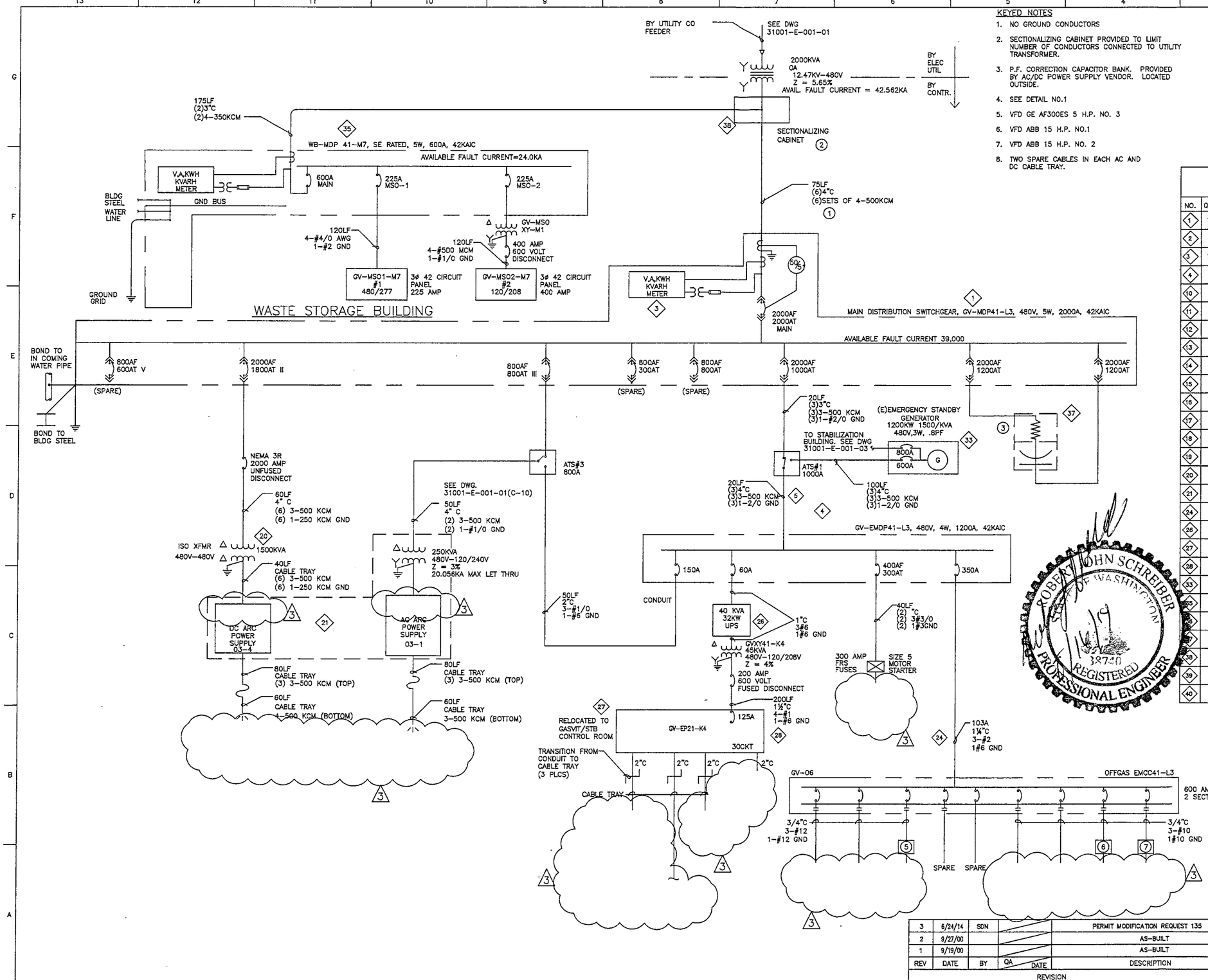

KEYED NOTES

1. NO GROUND CONDUCTORS
2. SECTIONALIZING CABINET PROVIDED TO LIMIT NUMBER OF CONDUCTORS CONNECTED TO UTILITY TRANSFORMER.
3. P.F. CORRECTION CAPACITOR BANK. PROVIDED BY AC/DC POWER SUPPLY VENDOR. LOCATED OUTSIDE.
4. SEE DETAIL NO.1
5. VFD GE AF300ES 5 H.P. NO. 3
6. VFD ABB 15 H.P. NO.1
7. VFD ABB 15 H.P. NO. 2
8. TWO SPARE CABLES IN EACH AC AND DC CABLE TRAY.

GENERAL NOTES

A ALL SWITCHES AND CIRCUIT BREAKERS ARE THREE POLE, UNLESS OTHERWISE NOTED.

B ALL EQUIPMENT, CONDUIT, AND WIRE IS NEW UNLESS OTHERWISE NOTED.

C COORDINATE WITH OWNER TO SCHEDULE DOWN TIME/ DEMO WORK.

D CONTRACTORS SHALL PROVIDE ALL ELECTRICAL EQUIPMENT, COMPONENTS, RACEWAYS AND FITTINGS UNLESS OTHERWISE NOTED.

E ALL RACEWAYS TO BE ROUTED PARALLEL AND PERPENDICULAR TO BUILDING GRID.

F CONTRACTOR TO FIELD VERIFY MOTOR FLA, PRIOR TO INSTALLATION OF MOTOR OVERLOAD ELEMENTS.

BILL OF MATERIALS

NO.	QTY.	NAME	TAG#	SPEC.
1	1	MAIN DISTRIBUTION BOARD	GV-MDP41-L3	OFCI
2		SEE DWG #31001-E-001-01	–	–
3	1	MAIN DISTRIBUTION METERING	–	–
4	1	1200A DISTRIBUTION PANELBOARD	GV-EMDP41-L4	16426
10		SEE DWG #31001-E-001-01		
11		SEE DWG #31001-E-001-01		
12		SEE DWG #31001-E-001-01	–	–
13		SEE DWG #31001-E-001-01		
14		SEE DWG #31001-E-001-01	–	–
15		SEE DWG 31001-E-001-02		
16		SEE DWG #31001-E-001-01		
17		SEE DWG #31001-E-001-01		
18		SEE DWG #31001-E-001-01	–	–
19		SEE DWG #31001-E-001-01		
20	1	1500 KVA 480-480 TRANSFORMER	–	OFCI
21	1	AC/DC POWER SUPPLY	GV-03-PS-0326 GV-03-PS-0375	OFCI
24	1	OFF GAS SKID EMCC-41-L3	–	OFCI
26	1	40 KVA UPS/ 32 KW UPS	–	16611
27	1	45 KVA 480-120/208V TRANSFORMER	GV-XY41-K4	16461
28	1	100A 120/208V PANELBOARD ALL INSTRUMENT POWER	GV-EP21-K4	16470
33	1	120 KVA EMER GEN	EXISTING @ SB	16622
35	1	600A MAIN DISTRIBUTION PANEL	WB-WDP41-M7	16426
36		SEE DWG #31001-E-001-01		
37	2	POWER FACTOR CORRECTION	–	–
38	1	SECTIONALIZING CABINET	–	–
39		SEE DWG #31001-E-001-01		
40		SEE DWG #31001-E-001-01		

ROBERT JOHN SCHREIBER
STATE OF WASHINGTON
38740
REGISTERED
PROFESSIONAL ENGINEER

REV	DATE	BY	QA	DATE	DESCRIPTION
3	6/24/14	SDN			PERMIT MODIFICATION REQUEST 135
2	9/27/00				AS-BUILT
1	9/19/00				AS-BUILT

REVISION

PermaFix®
environmental services
A Nuclear Services and Waste Management Company

DATE	
DRAWN	
CHECKED	
DFTG APVD	
ENGR	
APVD	
OTHER	
QA	

APPVD FOR IMPLEMENTATION BY
FOR DATE

MIXED WASTE FACILITY
BUILDING 13

ELECTRICAL
ONE-LINE SCHEMATIC
(GV-23)

SCALE: NONE | SHEET NO. 2

31001-E-001-02 | REV 3

Copy
Review & Recycle

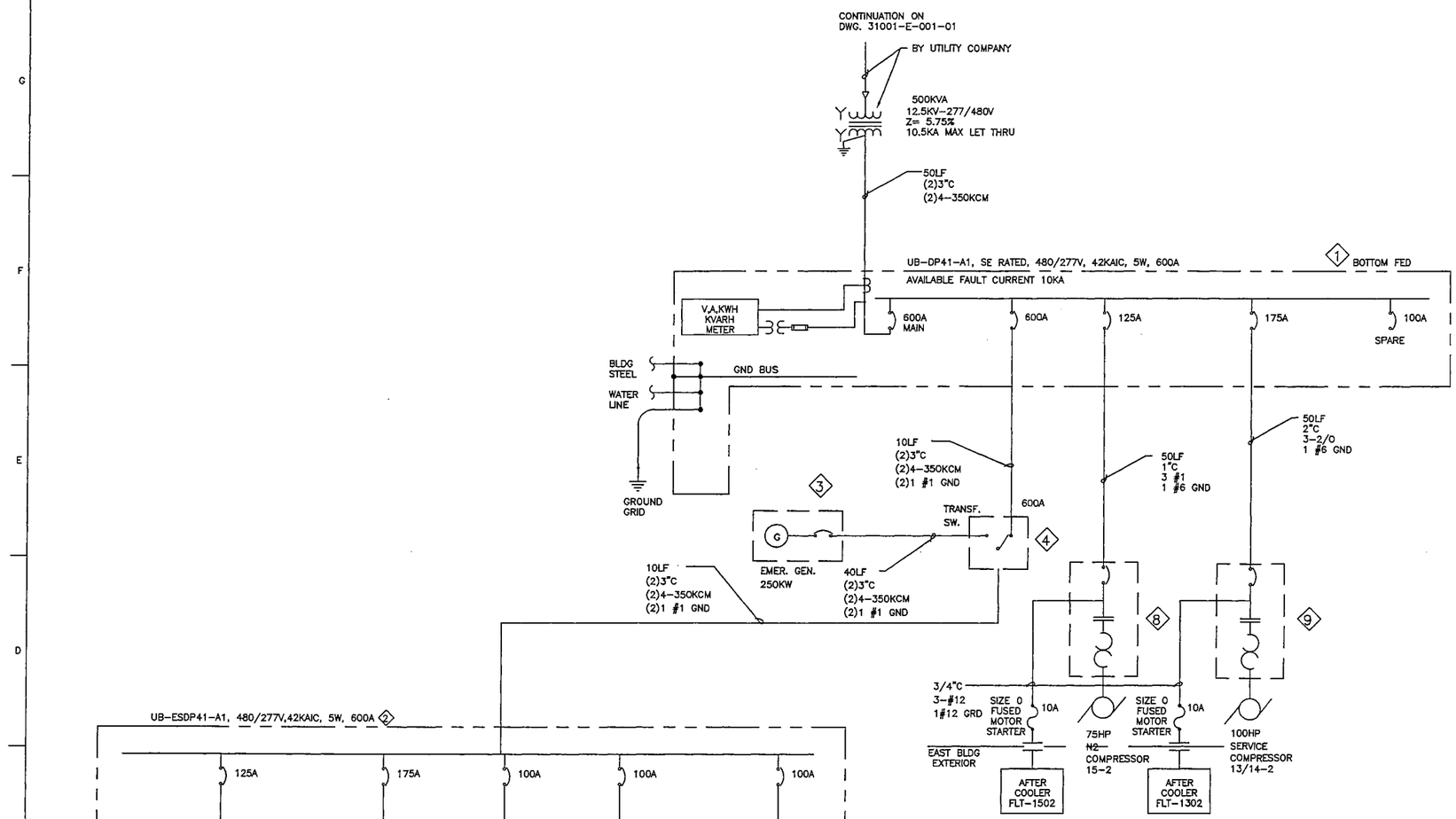

NORMAL POWER

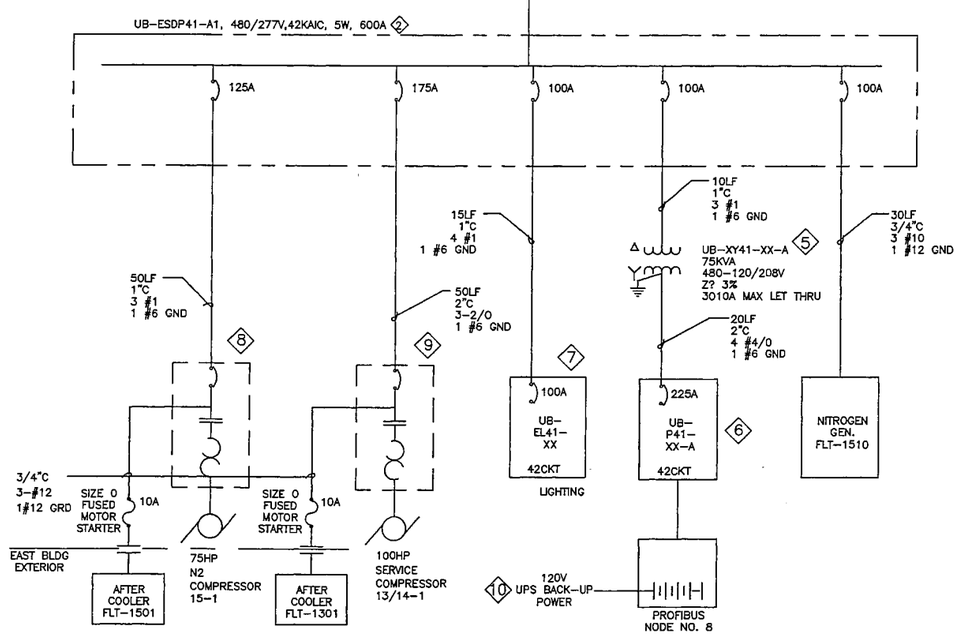

UTILITY BLDG.

EMERGENCY POWER

GENERAL NOTES

A ALL SWITCHES AND CIRCUIT BREAKERS ARE THREE POLE, UNLESS OTHERWISE NOTED.

B ALL EQUIPMENT, CONDUIT, AND WIRE IS NEW UNLESS OTHERWISE NOTED.

C COORDINATE WITH OWNER TO SCHEDULE DOWN TIME/ DEMO WORK.

D CONTRACTORS SHALL PROVIDE ALL ELECTRICAL EQUIPMENT, COMPONENTS, RACEWAYS AND FITTINGS UNLESS OTHERWISE NOTED.

E ALL RACEWAYS TO BE ROUTED PARALLEL AND PERPENDICULAR TO BUILDING GRID.

F CONTRACTOR TO FIELD VERIFY MOTOR FLA, PRIOR TO INSTALLATION OF MOTOR OVERLOAD ELEMENTS.

LEGEND

- SURGE ARRESTOR
- CABLE CONNECTOR
- NC NORMALLY CLOSE
- NO NORMALLY OPEN
- KEY INTERLOCK (KIRK-KEY)
- CIRCUIT BREAKER
- FUSE
- SWITCH
- TRANSFORMER
- DRAW OUT BREAKER

DEVICE LEGEND

- 64 GROUND DETECTION RELAY
- 50/51 TIME-OVERCURRENT AND INSTANTANIOUS OVERCURRENT RELAY
- 52/TC SHUNT TRIP BREAKER

BILL OF MATERIALS

NO.	QTY.	NAME	TAG#	SPEC.
1	1	MAIN DIST. PNL. 600A	UB-DP41-XX	16426
2	1	600A SUB-DIST. PNL.	UB-ESDP41-XX	16426
3	1	EMERGENCY GENERATOR, 250KW	—	
4	1	600A EMER. TRANSF. SW, 4P	—	16496
5	1	75KVA 480-120/208V XFMR	UB-XY41-XX-A	16461
6	1	225A 120/208V PANEL	UB-P41-XX-A	16470
7	1	100A LIGHTING PANEL	UB-EL41-XX	16470
8	2	75HP N2 COMPRESSOR/STARTER	—	
9	2	100HP AIR COMPRESSOR/STARTER	—	
10	1	SOLA HEADY DUTY UPS, 115V, 60HZ, 350 VA-7.2 AH (LOCATED INSIDE PROFIBUS CABINET)	—	

ROBERT JOHN SCHREIBER
STATE OF WASHINGTON
38740
REGISTERED
PROFESSIONAL ENGINEER

REV	DATE	BY	QA	DATE	DESCRIPTION
3		SDN		8/13/14	PERMIT MODIFICATION REQUEST 135
2		JEG		9/00	AS-BUILT
1		REC		11/99	ISSUE FOR BID
0		PEB		2/99	ISSUE FOR TCSA/RCRA PERMIT APPLICATION

REVISION

PermaFix®
environmental services
A Nuclear Services and Waste Management Company

DATE	
DRAWN	
CHECKED	
DFTG APVD	
ENGR	
APVD	
OTHER	
QA	
APPVD FOR IMPLEMENTATION BY	
FOR DATE	

MIXED WASTE FACILITY

ELECTRICAL
ONE-LINE SCHEMATIC
UTILITY BUILDING

SCALE: AS SHOWN | SHEET NO. 4

DWG. NO. 31001-E-001-03 | REV 3

GENERAL NOTES

A REFER TO ONE-LINE DRAWING DWG.#31001-E-001-01 FOR SOURCE.

——— = REMOVED BY PMR135

(2)

GV-EMCC41-N5, 480V, 4W, 600A, 42KAIC

UNIT NO.	EQUIP. NO.	UNIT IDENTIFICATION	CB FRAME	NEMA SIZE	MOTOR HP	MOTOR FLA	KW @ PF	HMCP SWITCH AMP	OVERLOAD SETTING AMP	ELEM DIAGRAM
		INCOMING FEED - 600A								
	20-1	CHW PMP # 1		50A	30	20	14			
	~~19-1~~	~~PCW PUMPS 120~~		~~100A~~	~~30~~	~~40~~	~~28.3~~			
	09-2	HEPA BLOWER #1		80A	40	52	36.8			
	09-1	BLOWER 925		80A	40	52	36.8			
	~~17-4~~	~~RO LOOP PUMP 1705~~		~~15A~~	~~5~~	~~7.8~~	~~5.3~~			
	~~12-1~~	~~CAUSTIC TRANSFER PUMP P-1206~~		~~15A~~	~~5~~	~~7.8~~	~~5.3~~			
	~~12-2~~	~~CAUSTIC SUPPLY PUMP P-1204~~		~~15A~~	~~1.5~~	~~3~~	~~2.1~~			
	~~12-3~~	~~CAUSTIC SUPPLY HEATER~~		~~15A~~	~~-~~	~~10~~	~~7.1~~			
	~~07-3~~	~~QUENCH PUMP #3 GV07~~		~~15A~~	~~5~~	~~7.6~~	~~5.4~~			
	-	SPARE		-	-	-				
	-	SPARE		-	-	-				
	-	SPARE		-	-	-				
	-	SPARE		-	-	-				
	-	SPARE		-	-	-				
	-	SPARE		-	-	-				
	-	SPARE		-	-	-				
	-	SPARE		-	-	-				
	-	SPARE		-	-	-				
	-	SPARE		-	-	-				
	-	SPARE		-	-	-				
	-	SPARE		-	-	-				
	-	SPARE		-	-	-				
	-	SPARE		-	-	-				
	-	SPARE		-	-	-				
	-	SPARE		-	-	-				
	-	SPARE		-	-	-				
	-	SPARE		-	-	-				
	-	SPARE		-	-	-				
	-	SPARE		-	-	-				
	-	SPARE		-	-	-				
	-	SPARE		-	-	-				
	-	SPARE		-	-	-				
		SUB-TOTAL				-				
		25% LARGEST MOTOR				-				
		TOTAL CONNECTED LOAD				-	141.1			

(1 / E02) MCC SCHEDULE
NOT TO SCALE

(2)

GV-MCC41-N4, 480V, 4W, 800A, 42KAIC

UNIT NO.	EQUIP. NO.	UNIT IDENTIFICATION	CB FRAME	NEMA SIZE	MOTOR HP	MOTOR FLA	KW @ PF	HMCP SWITCH AMP	OVERLOAD SETTING AMP	ELEM DIAGRAM
		INCOMING FEED - 800A								
	-	11-1 SEE DWG 31001-E-001-01 REV2		80A						
	22-5	EXHAUST FAN #1		250A	165	180	127.6			
	~~07-1~~	~~PREHEAT AIR BLOWER (BLO-0701)~~		~~15A~~	~~5~~	~~7.6~~	~~5.4~~			
	20-2	CHW PUMP #2		50A	30	40	28.4			
	~~09-3~~	~~POST QUENCH HEPA BLOWER #2~~		~~80A~~	~~30~~	~~52~~	~~36.8~~			
	~~11-13~~	~~BOILER FEED PUMP~~		~~15A~~	~~2~~	~~3.4~~	~~2.4~~			
	~~-~~	~~BAG HOUSE~~		~~-~~	~~-~~	~~-~~	~~-~~			
	~~02-2-1~~	~~LIQUID FEED TANK PUMP (PMP-0209)~~		~~15A~~	~~7.5~~	~~11~~	~~7.8~~			
	~~02-2-2~~	~~LIQUID FEED TANK PUMP (PMP-0210)~~		~~15A~~	~~7.5~~	~~11~~	~~7.8~~			
	06-7	HEPA ID FAN #2		30A	15	21	14.9			
	22-4	SUPPLY AIR FAN ELEC. ROOM		15A	5	7.5	5.3			
	~~11-4~~	~~DISTILATE PUMP~~		~~15A~~	~~1.5~~	~~3~~	~~2.1~~			
	~~11-5~~	~~FILTRATE PUMP~~		~~15A~~	~~1.5~~	~~3~~	~~2.1~~			
	~~07-4~~	~~QUENCH PUMP # 2 (GV07)~~		~~15A~~	~~5~~	~~7.6~~	~~5.4~~			
	~~11-12~~	~~TANK MIXER (TK-1105)~~		~~15A~~	~~2~~	~~3.4~~	~~2.4~~			
	~~11-11~~	~~TANK MIXER (TK-1106)~~		~~15A~~	~~2~~	~~3.4~~	~~2.4~~			
	~~05-1~~	~~N2 PRE HEATER (HT-0511)~~		~~15A~~	~~-~~	~~10~~	~~7.1~~			
	~~05-2~~	~~HEPA FAN (FLT-0530)~~		~~15A~~	~~3~~	~~4.8~~	~~3.2~~			
	~~04-1~~	~~HEPA FAN (FLT-0427)~~		~~15A~~	~~3~~	~~12~~	~~8.5~~			
	~~04-3~~	~~HEPA FAN (FLT-0517)~~		~~15A~~	~~3~~	~~12~~	~~8.5~~			
	~~04-2~~	~~CONVEYOR (MOT-0422)~~		~~15A~~	~~1.5~~	~~8~~	~~5.8~~			
	~~04-4~~	~~CONVEYOR (MOT-0412)~~		~~15A~~	~~1.5~~	~~8~~	~~5.8~~			
	-	SPARE		-	-	-				
	-	SPARE		-	-	-				
	-	SPARE		-	-	-				
	-	SPARE		-	-	-				
	-	SPARE		-	-	-				
	-	SPARE		-	-	-				
	-	SPARE		-	-	-				
	-	SPARE		-	-	-				
	-	SPARE		-	-	-				
	-	SPARE		-	-	-				
	-	SPARE		-	-	-				
		SUB-TOTAL				406.7				
		25% LARGEST MOTOR				-				
		TOTAL CONNECTED LOAD				-	289.3			

(2 / E02) EMCC SCHEDULE
NOT TO SCALE

(2)

GV-06 4x4 WIREWAY

UNIT NO.	EQUIP. NO.	UNIT IDENTIFICATION	CB FRAME	NEMA SIZE	MOTOR HP	MOTOR FLA	KW @ PF	HMCP SWITCH AMP	OVERLOAD SETTING AMP	ELEM DIAGRAM
		INCOMING FEED - 800A								
	06-1	RECIRC PUMP (PMP-0602)		25	15	21	14.9			
	06-3	RECIRC PUMP (PMP-0622)		25	15	21	14.9			
	~~06-5~~	~~RECIRC PUMP (PMP—0632)~~		~~2~~	~~1~~	~~2.1~~	~~1.5~~			
	-	ITEM NOT FOUND IN MATRIX		-	-	-	-			
	-	ITEM NOT FOUND IN MATRIX		-	-	-	-			
	~~06-6~~	~~HEPA I.D. FAN #1~~			~~15~~	~~21~~	~~14.9~~			
	~~06-8~~	~~BOOSTER FAN~~			~~15~~	~~21~~	~~14.9~~			
	-	-		-	-	-				
	-	-		-	-	-				
	-	-		-	-	-				
	-	-		-	-	-				
	-	-		-	-	-				
	-	-		-	-	-				
	-	-		-	-	-				
	-	-		-	-	-				
	-	-		-	-	-				
	-	-		-	-	-				
	-	-		-	-	-				
	-	-		-	-	-				
	-	-		-	-	-				
	-	-		-	-	-				
	-	-		-	-	-				
	-	-		-	-	-				
	-	-		-	-	-				
	-	-		-	-	-				
		SUB-TOTAL				86.1				
		25% LARGEST MOTOR				-				
		TOTAL CONNECTED LOAD				-				

LUG SCHEDULE		
CABLE SIZE	NUMBER OF LUGS	THOMAS & BETTS PART NUMBER
500 KCM	9	53218
350 KCM	12	53215
250 KCM	12	53213
3/0	1	53211
2/0	1	53210
#4	2	53206

*LUGS TO BE THOMAS & BETTS OR APPROVED EQUAL.

(3 / E03) LUG SCHEDULE FOR TERMINATION BOX
NOT TO SCALE

ROBERT JOHN SCHREIBER
STATE OF WASHINGTON
REGISTERED PROFESSIONAL ENGINEER

PermaFix environmental services
A Nuclear Services and Waste Management Company

Copy
Review & Recycle

REV	DATE	BY	QA DATE	DESCRIPTION
2	7/01/14	SDN		PERMIT MODIFICATION REQUEST 135
	2/98			ISSUE FOR TSCA/RCRA PERMIT APPLICATION

REVISION

DATE	
DRAWN	
CHECKED	
DFTG APVD	
ENGR	
APVD	
OTHER	
QA	
APVD FOR IMPLEMENTATION BY	
FOR	DATE

MIXED WASTE FACILITY
BUILDING 13

ELECTRICAL
MCC SCHEDULES
(GV-23)

SCALE: NONE | SHEET NO. 1
DWG NO. 31001-E-002-01 | REV 2

Copy
Review & Recycle

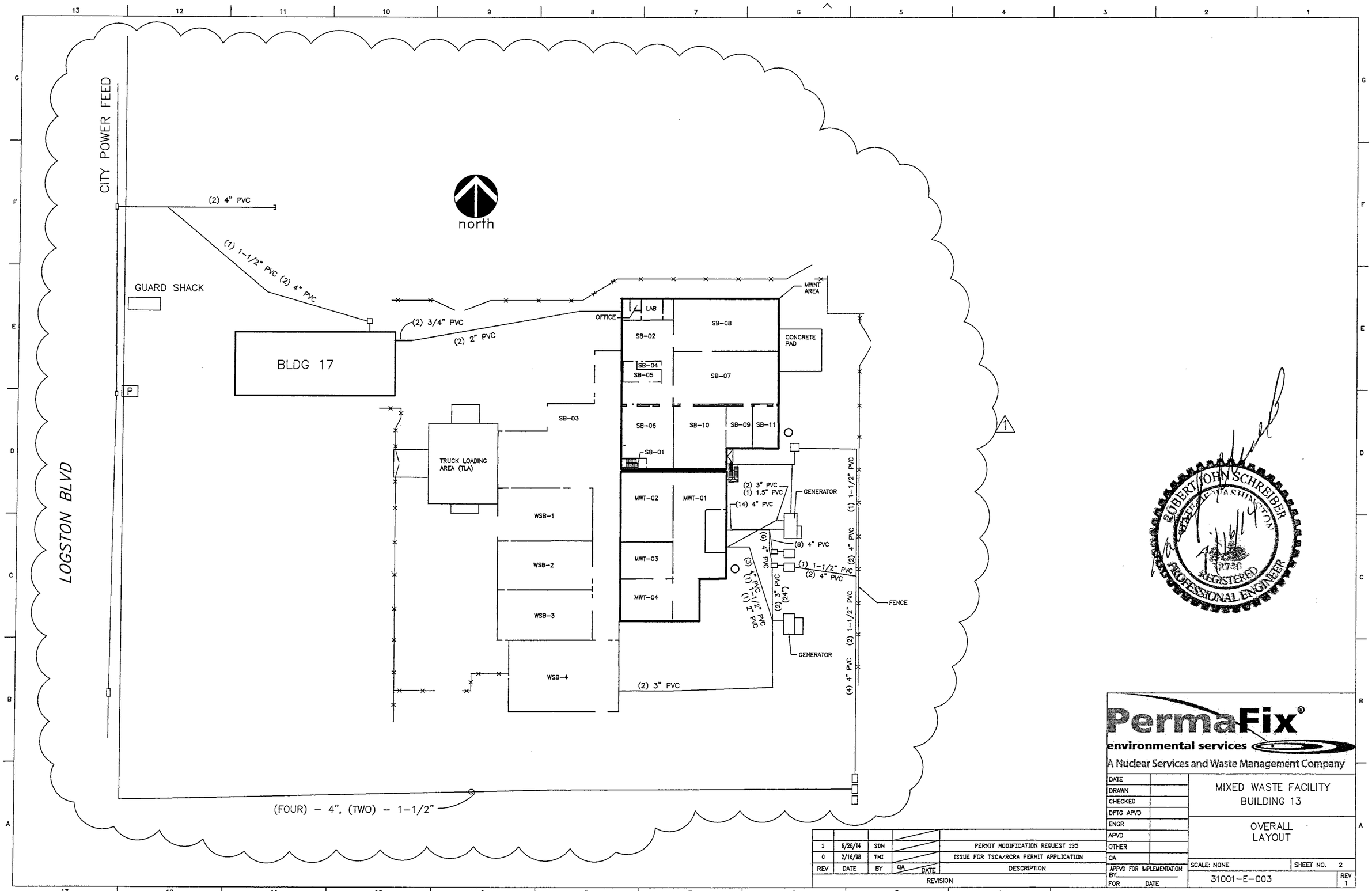

ROBERT JOHN SCHREIBER
STATE OF WASHINGTON
18724
REGISTERED
PROFESSIONAL ENGINEER

REV	DATE	BY	QA	DATE	DESCRIPTION
1	6/26/14	SDN			PERMIT MODIFICATION REQUEST 135
0	2/16/98	TMI			ISSUE FOR TSCA/RCRA PERMIT APPLICATION

REVISION

PermaFix®
environmental services
A Nuclear Services and Waste Management Company

DATE	
DRAWN	
CHECKED	
DFTG APVD	
ENGR	
APVD	
OTHER	
QA	
APPVD FOR IMPLEMENTATION BY	
FOR DATE	

MIXED WASTE FACILITY
BUILDING 13

OVERALL
LAYOUT

SCALE: NONE | SHEET NO. 2

31001-E-003 | REV 1

Copy
Review & Recycle

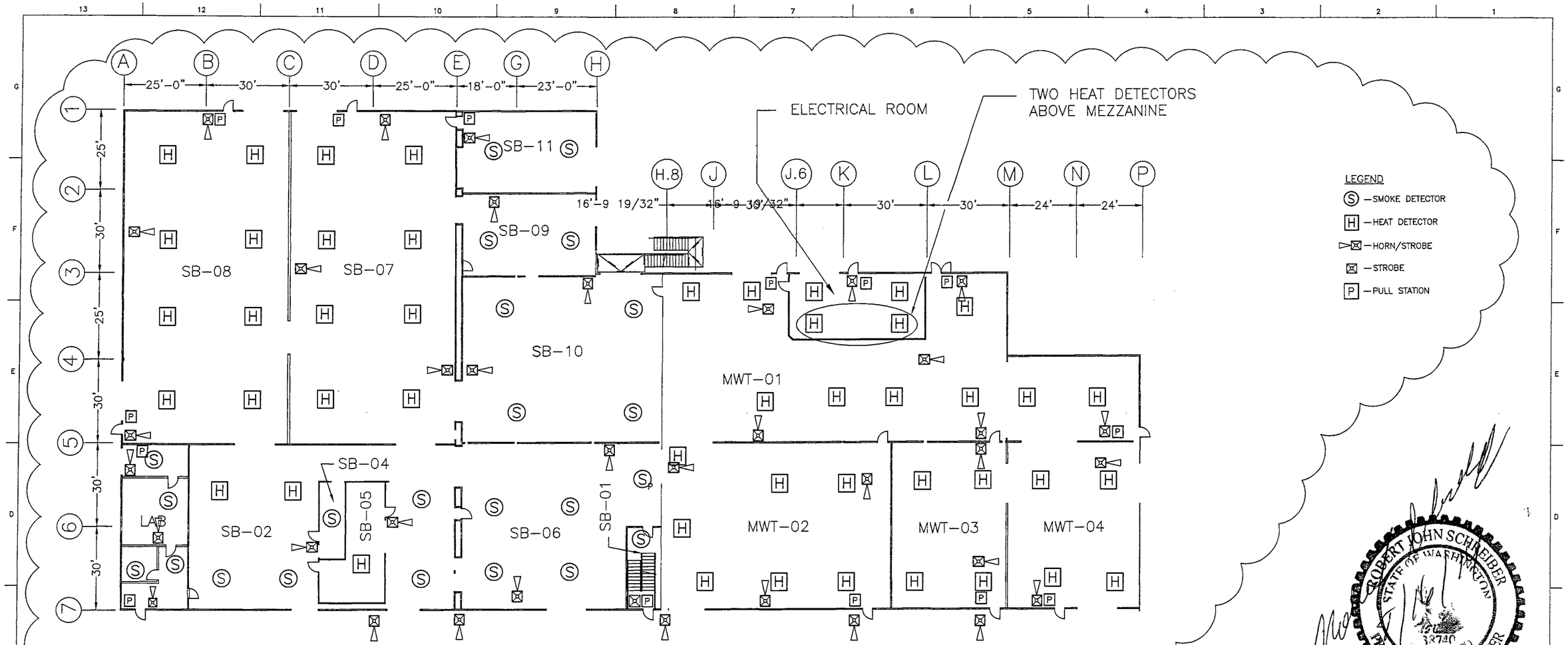

MIXED WASTE FACILITY
FIRST FLOOR
NON-THERMAL & THERMAL AREAS

FIRE ALARM CONTROL PANEL:
MANUFACTURER: SECUTRON
MODEL: MR-2900/MR

DISTRIBUTED POWER MODULE
MANUFACTURER: SILENT KNIGHT
MODEL: 5495

SMOKE DETECTOR
MANUFACTURER: SYSTEM SENSOR
MODEL: 2251
ZONE: MWNT

SMOKE DETECTOR
MANUFACTURER: SYSTEM SENSOR
MODEL: 2251B
ZONE: MWNT

HEAT DETECTOR
MANUFACTURER: SYSTEM SENSOR
MODEL: 5251B FIXED TEMP 135°F
ZONE: MWNT

HEAT DETECTOR
MANUFACTURER: SYSTEM SENSOR
MODEL: 5251P FIXED TEMP 135°F
ZONE: SB-03, WSB, MWTH

STROBE:
MANUFACTURER: SYSTEM SENSOR
MODEL: S241575

HORN/STROBE:
MANUFACTURER: SYSTEM SENSOR
MODEL: P2475

HORN/STROBE:
MANUFACTURER: SYSTEM SENSOR
MODEL: PC2475W

PULL STATION:
MANUFACTURER: SECUTRON
MODEL: MRM-RMS-1T-LP
ADDRESSABLE DEVICE:
MANUFACTURER: SYSTEM SENSOR
MODEL: M501M

ROBERT JOHN SCHNEIBER
STATE OF WASHINGTON
38740
REGISTERED
PROFESSIONAL ENGINEER

PermaFix®
environmental services
A Nuclear Services and Waste Management Company

MIXED WASTE FACILITY
BUILDING 13

ELECTRICAL
FIRE PROTECTION
1ST FLOOR

REV	DATE	DESCRIPTION	REFERENCES
2	6/24/14		PERMIT MODIFICATION REQUEST 135

DRAWN: S.NORTON
ENGR:
QA:

SCALE: NONE SHT: 1
31001-E-004-01 REV 2

Copy
Review & Recycle

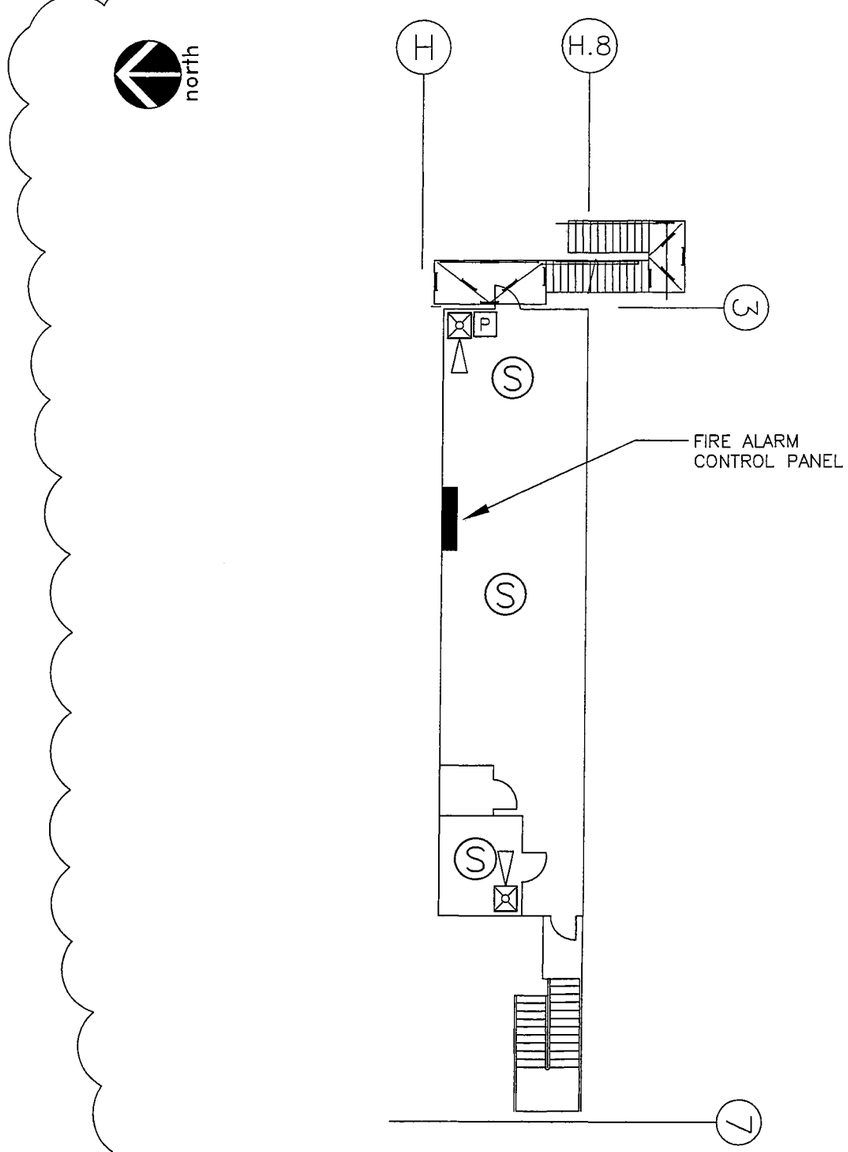

MIXED WASTE FACILITY
SECOND FLOOR

LEGEND

- FIRE ALARM CONTROL PANEL
- (S) —SMOKE DETECTOR
- [P] —PULL STATION
- —HORN/STROBE

FIRE ALARM CONTROL PANEL:
MANUFACTURER: SECUTRON
MODEL: MR-2900/MR

DISTRIBUTED POWER MODULE
MANUFACTURER: SILENT KNIGHT
MODEL: 5495

SMOKE DETECTOR
MANUFACTURER: SYSTEM SENSOR
MODEL: 2251
ZONE: MWNT

SMOKE DETECTOR
MANUFACTURER: SYSTEM SENSOR
MODEL: 2251B
ZONE: MWNT

HORN/STROBE:
MANUFACTURER: SYSTEM SENSOR
MODEL: P2475

HORN/STROBE:
MANUFACTURER: SYSTEM SENSOR
MODEL: PC2475W

PULL STATION:
MANUFACTURER: SECUTRON
MODEL: MRM-RMS-1T-LP
ADDRESSABLE DEVICE:
MANUFACTURER: SYSTEM SENSOR
MODEL: M501M

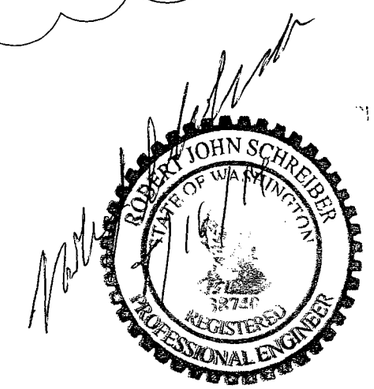

PermaFix®
environmental services
A Nuclear Services and Waste Management Company

MIXED WASTE FACILITY
BUILDING 13

ELECTRICAL
FIRE PROTECTION
2nd FLOOR

REV	DATE	DESCRIPTION	REFERENCES
1	6/24/14		PERMIT MODIFICATION REQUEST 135

DRAWN	S.NORTON
ENGR	
QA	

SCALE: NONE SHT: 2

31001-E-004-02 REV 1

Copy
Review & Recycle

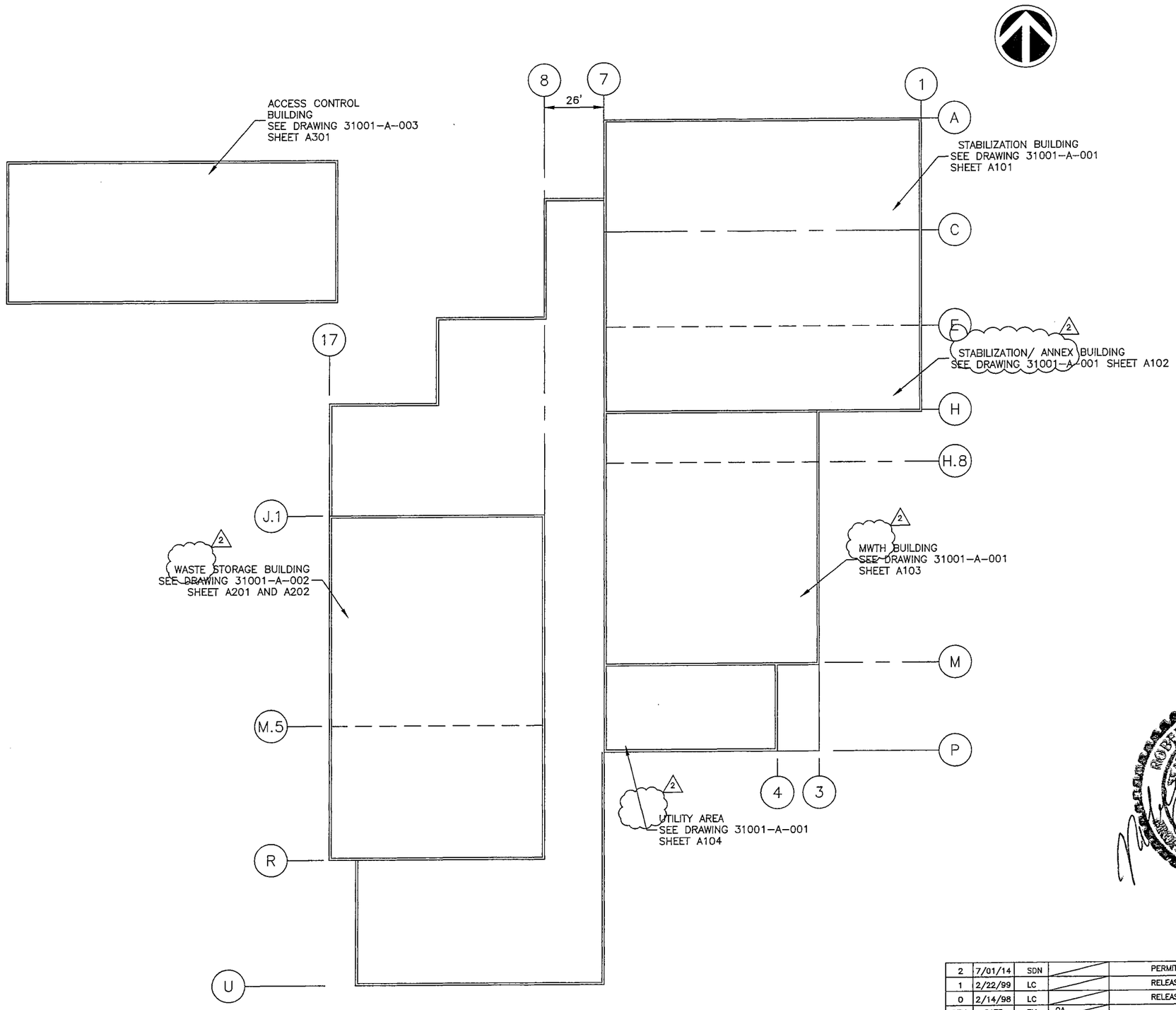

LEGEND:

- (1) — STRUCTURE COLUMN LINE
- (1) — SWING DOOR TYPE
- [1] — OVERHEAD ROLL-UP DOOR TYPE
- (1) — WINDOW TYPE
- A-101 / A-001 — PAGE NUMBER / BLDG IDENDITY
  - A001 STB/ANNEX/MWTH/UTILITY
  - A002 STORAGE
  - A003 ACCESS CONTROL

NOTE:

FOR ROOFF SLOPE, GUTTER, AND DRAINAGE SEE DRAWING 31001-C-005 SHEETS C401, C402, C403

ROBERT JOHN SCHREIBER
STATE OF WASHINGTON
REGISTERED
PROFESSIONAL ENGINEER

REV	DATE	BY	QA	DATE	DESCRIPTION
2	7/01/14	SDN			PERMIT MODIFICATION REQUEST 135
1	2/22/99	LC			RELEASED FOR CONSTRUCTION
0	2/14/98	LC			RELEASED FOR CONSTRUCTION

REVISION

PermaFix®
environmental services
A Nuclear Services and Waste Management Company

DATE	
DRAWN	
CHECKED	
DFTG APVD	
ENGR	
APVD	
OTHER	
QA	
APPVD FOR IMPLEMENTATION BY	
FOR	DATE

MIXED WASTE FACILITY
BUILDING 13

ARCHITECTURAL
KEY PLAN

SCALE: NONE | SHEET NO. A001
DWG NO. 31001-A-000 | REV 2

Xref H:\Current Drawings\31001 MW\XREFS\border.dwg

Copy
Review & Recycle

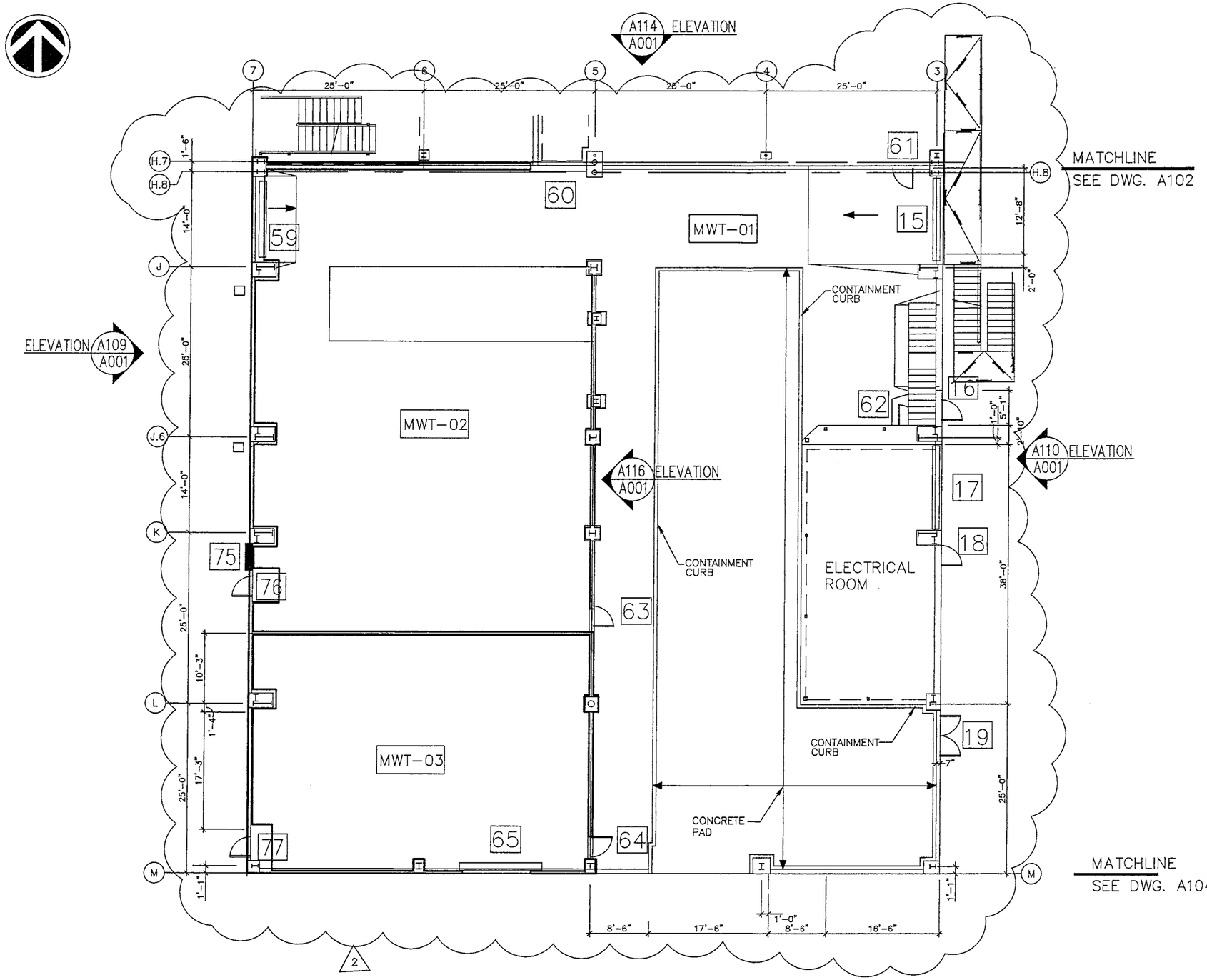

MATCHLINE
SEE DWG. A104

1 BUILDING FLOOR PLAN
SCALE: 1/16" = 1'-0"

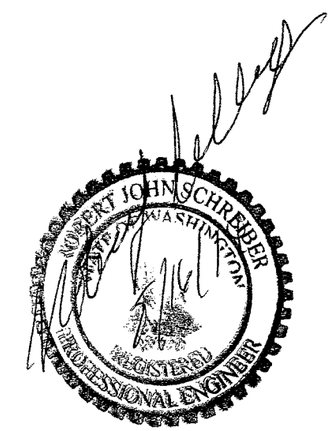

PermaFix®
environmental services
A Nuclear Services and Waste Management Company

DATE	
DRAWN	
CHECKED	
DFTG APVD	
ENGR	
APVD	
OTHER	
QA	
APPVD FOR IMPLEMENTATION BY	
FOR DATE	

MIXED WASTE FACILITY
BUILDING 13

ARCHITECTURAL
FLOOR PLAN
MWTH

SCALE: AS SHOWN | SHEET NO. A103
DWG. NO. 31001-A-001 | REV 2

REV	DATE	BY	QA	DATE	DESCRIPTION
2	7/07/14	SDN			PERMIT MODIFICATION REQUEST 135
1A	2-22-99	LC			RELEASED FOR BID
0	2-14-98	LC			RELEASED FOR CONSTRUCTION

REVISION

Xref H:\Current Drawings\31001 MW\XREFS\border.dwg

Copy
Review & Recycle

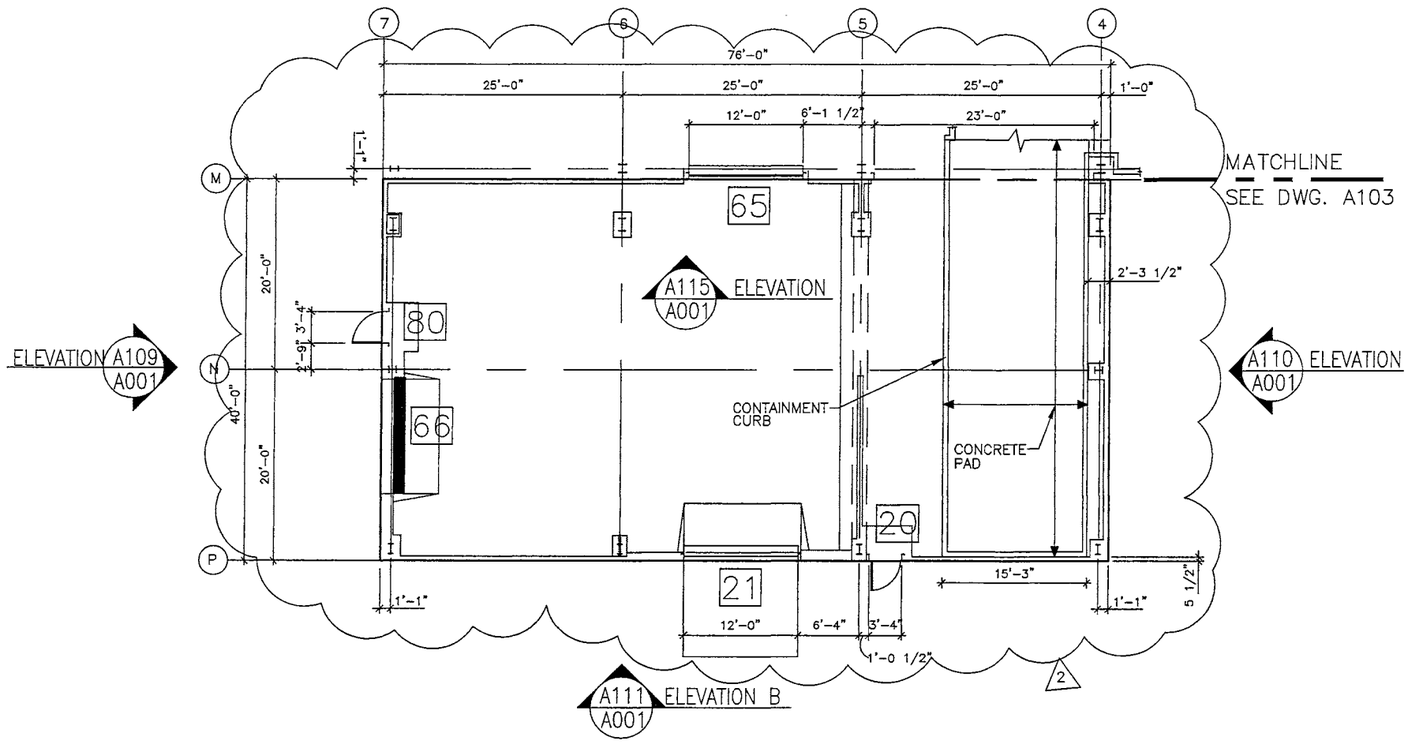

BUILDING PLAN

SCALE:1/16"=1'-0"

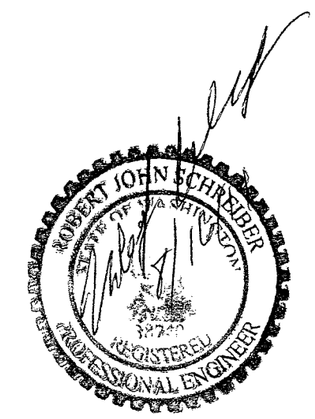

PermaFix®
environmental services
A Nuclear Services and Waste Management Company

DATE	
DRAWN	
CHECKED	
DFTG APVD	
ENGR	
APVD	
OTHER	
QA	
APPVD FOR IMPLEMENTATION BY	
FOR DATE	

MIXED WASTE FACILITY
BUILDING 13

ARCHITECTURAL
FLOOR PLAN
MWTH

SCALE: AS SHOWN | SHEET NO. A104

DWG. NO. 31001-A-001 | REV 2

REV	DATE	BY	QA	DATE	DESCRIPTION
2	7/07/14	SDN			PERMIT MODIFICATION REQUEST 135
1A	2/22/99	LC			RELEASED FOR BID
0	2/14/98	LC			RELEASED FOR CONSTRUCTION

REVISION

Copy
Review & Recycle

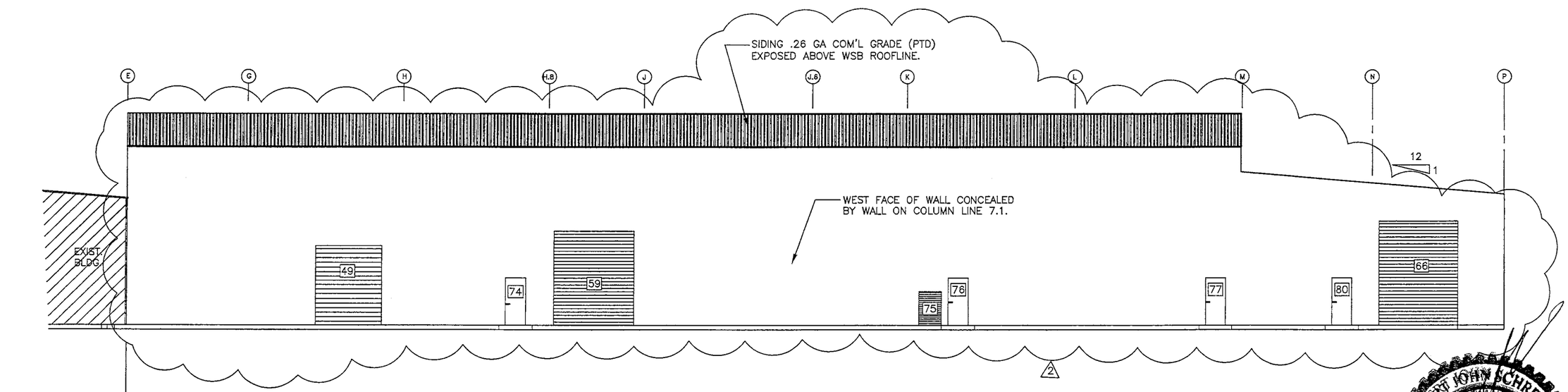

A109 / A001 ELEVATION AT GRID LINE 7, E–P
SCALE: 1/16" = 1'-0"

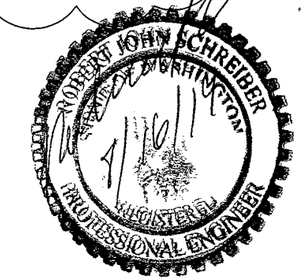

REV	DATE	BY	QA	DATE	DESCRIPTION
2	7/07/14	SDN			PERMIT MODIFICATION REQUEST 135
1	2/22/99	LC			RELEASED FOR BID
0	2/14/98	LC			RELEASED FOR CONSTRUCTION

REVISION

PermaFix®
environmental services
A Nuclear Services and Waste Management Company

DATE	
DRAWN	
CHECKED	
DFTG APVD	
ENGR	
APVD	
OTHER	
QA	
APPVD FOR IMPLEMENTATION BY_____ FOR DATE	

2 MIXED WASTE FACILITY
BUILDING 13
STB, MWTH

ARCHITECTURAL
ELEVATION AT GRID LINE 7

SCALE: AS SHOWN | SHEET NO. A109
DWG. NO. 31001–A–001 | REV 2

Copy
Review & Recycle

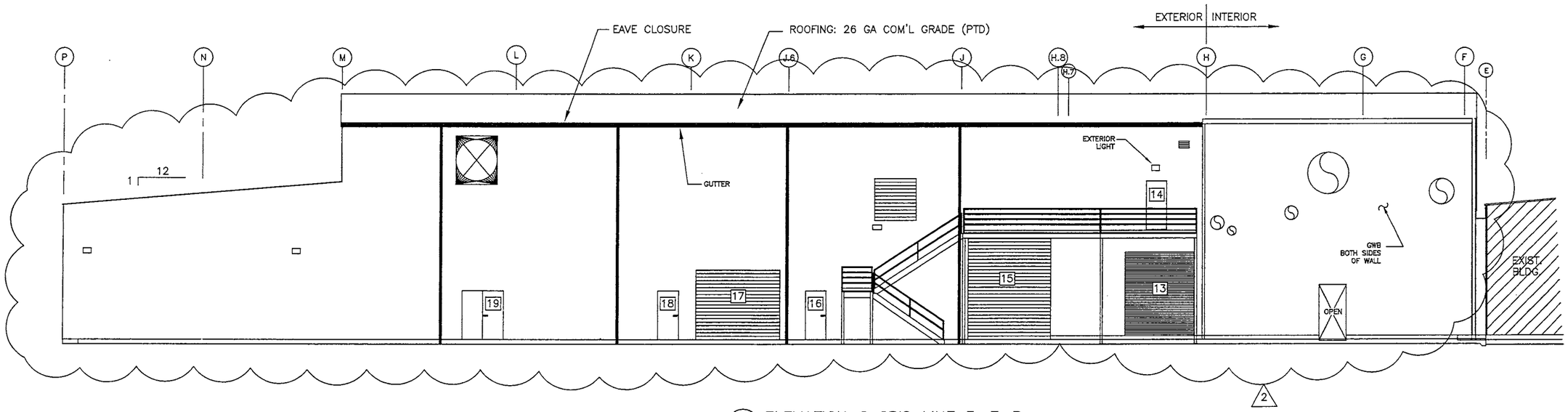

A110 / 001 ELEVATION @ GRID LINE 3, E–P
SCALE: 1/16" = 1'–0"

ROBERT JOHN SCHREIBER
STATE OF WASHINGTON
REGISTERED
PROFESSIONAL ENGINEER

PermaFix®
environmental services
A Nuclear Services and Waste Management Company

DATE	
DRAWN	
CHECKED	
DFTG APVD	
ENGR	
APVD	
OTHER	
QA	
APPVD FOR IMPLEMENTATION BY_____ FOR DATE	

MIXED WASTE FACILITY
BUILDING 13
STB, MWTH

ARCHITECTURAL
ELEVATION AT GRID LINE 3

SCALE: AS SHOWN | SHEET NO. A110
DWG. NO. 31001–A–001 | REV 2

REV	DATE	BY	QA	DATE	DESCRIPTION
2	7/07/14	SDN			PERMIT MODIFICATION REQUEST 135
1	2/22/99	LC			RELEASED FOR BID
0	2/14/98	LC			RELEASED FOR CONSTRUCTION

REVISION

Copy
Review & Recycle

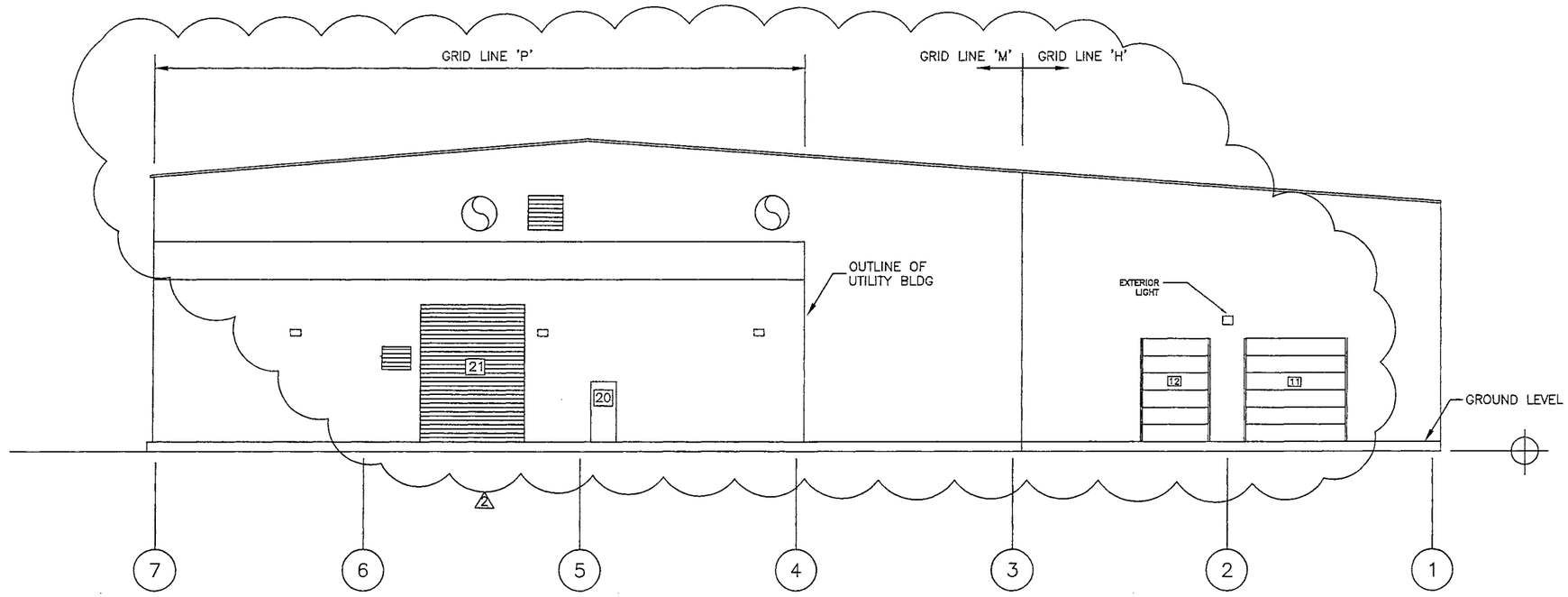

B — ELEVATION @ GRID LINE – P
SCALE: 1/16" = 1'-0"

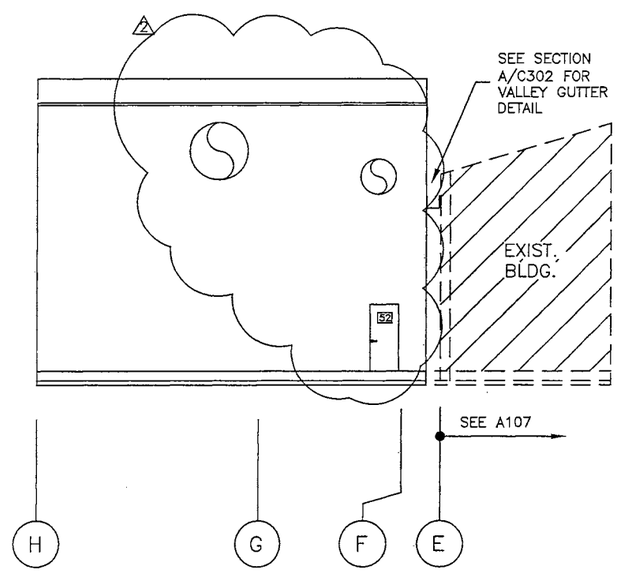

A — ELEVATION @ GRID LINE – 1
SCALE: 1/16" = 1'-0"

REV	DATE	BY	QA	DATE	DESCRIPTION
2	7/08/14	SDN			PERMIT MODIFICATION REQUEST 135
1A	2-22-99	LC			RELEASED FOR BID
0	2-14-98	LC			RELEASED FOR CONSTRUCTION

REVISION

ROBERT JOHN SCHREUER
STATE OF WASHINGTON
REGISTERED
PROFESSIONAL ENGINEER

PermaFix®
environmental services
A Nuclear Services and Waste Management Company

DATE	
DRAWN	
CHECKED	
DFTG APVD	
ENGR	
APVD	
OTHER	
QA	
APPVD FOR IMPLEMENTATION BY	
FOR DATE	

MIXED WASTE FACILITY
BUILDING 13
STB, MWTH

ARCHITECTURAL
ELEVATION AT GRID LINE 1 & P

SCALE: AS SHOWN | SHEET NO. A111
DWG. NO. 31001-A-001 | REV 2

Xref H:\Current Drawings\31001 MW\XREFS\Border.dwg

Copy
Review & Recycle

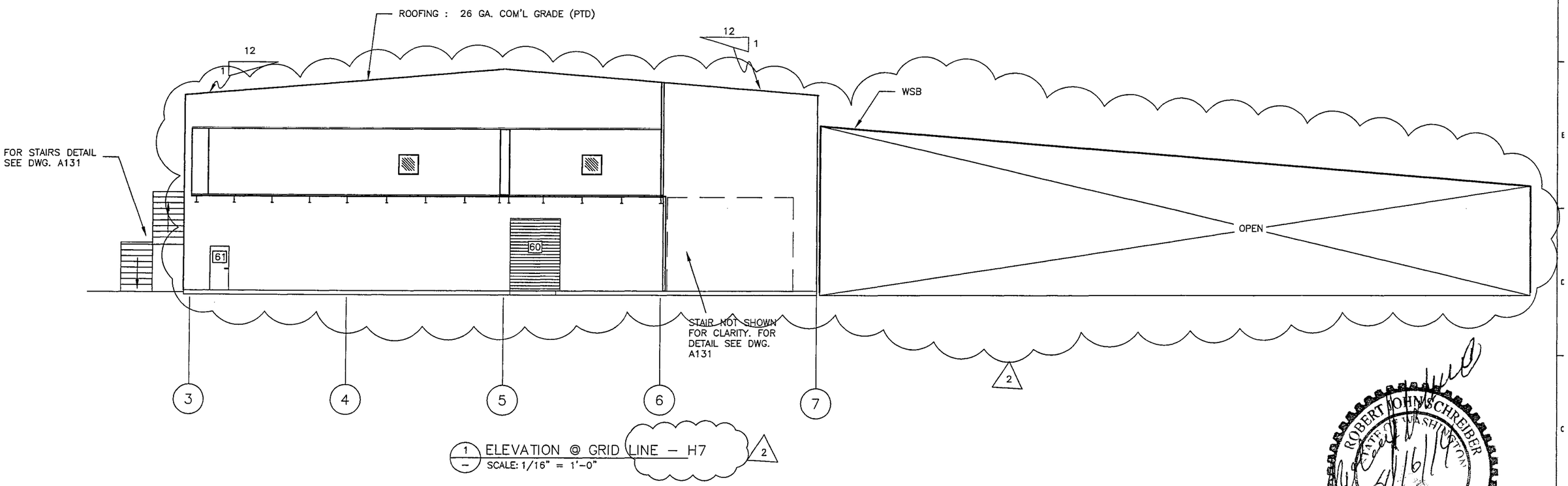

1 ELEVATION @ GRID LINE – H7 2
SCALE: 1/16" = 1'-0"

ROBERT JOHN SCHREIBER
STATE OF WASHINGTON
REGISTERED
PROFESSIONAL ENGINEER
4/16/14

PermaFix®
environmental services
A Nuclear Services and Waste Management Company

DATE	
DRAWN	
CHECKED	
DFTG APVD	
ENGR	
APVD	
OTHER	
QA	
APPVD FOR IMPLEMENTATION BY	
FOR DATE	

2 MIXED WASTE FACILITY
BUILDING 13

ARCHITECTURAL
ELEVATION @ GRID LINE H.7

SCALE: AS SHOWN | SHEET NO. A114
DWG. NO. 31001–A–001 | REV 2

REV	DATE	BY	QA	DATE	DESCRIPTION
2	7/08/14	SDN			PERMIT MODIFICATION REQUEST 135
1A	2–22–99	LC			RELEASED FOR BID
0	2–14–98	LC			RELEASED FOR CONSTRUCTION

REVISION

Copy
Review & Recycle

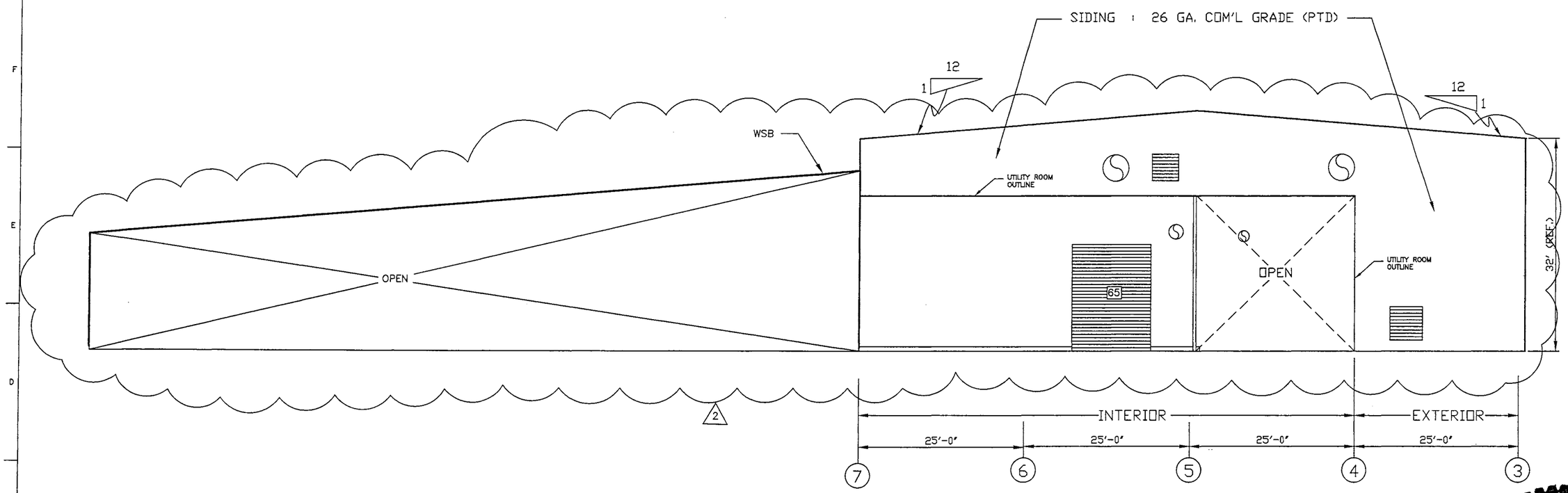

A115 / A001 ELEVATION AT GRID LINE M
SCALE: 1/16" = 1'-0"

ROBERT JOHN SCHREIBER
STATE OF WASHINGTON
38740
REGISTERED
PROFESSIONAL ENGINEER

PermaFix®
environmental services
A Nuclear Services and Waste Management Company

REV	DATE	BY	QA	DATE	DESCRIPTION
2	07/09/14	SDN			PERMIT MODIFICATION REQUEST 135
1A	2-22-99	LC			RELEASED FOR BID
0	2-14-98	LC			RELEASED FOR CONSTRUCTION

REVISION

DATE	
DRAWN	
CHECKED	
DFTG APVD	
ENGR	
APVD	
OTHER	
QA	
APPVD FOR IMPLEMENTATION BY	
FOR DATE	

MIXED WASTE FACILITY
BUILDING 13
MWTH

ARCHITECTURAL
ELEVATION AT GRID LINE M

SCALE: AS SHOWN
SHEET NO. A115
DWG. NO. 31001-A-001
REV 2

Copy
Review & Recycle

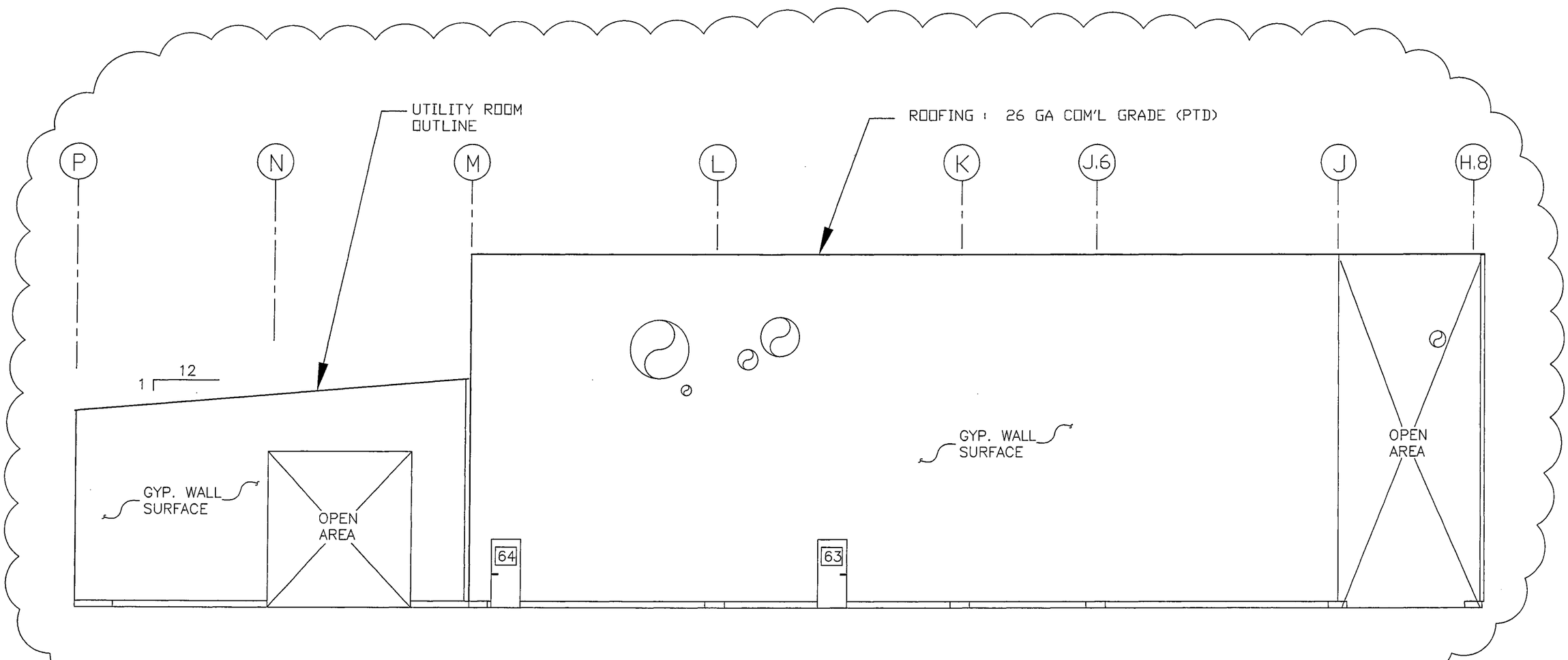

A103/A001 ELEVATION AT GRID LINE 5
SCALE: 3/32" = 1'-0"

ROBERT JOHN SCHREIBER
STATE OF WASHINGTON
38740
REGISTERED
PROFESSIONAL ENGINEER

PermaFix®
environmental services
A Nuclear Services and Waste Management Company

DATE	
DRAWN	
CHECKED	
DFTG APVD	
ENGR	
APVD	
OTHER	
QA	
APPVD FOR IMPLEMENTATION BY	
FOR DATE	

MIXED WASTE FACILITY
BUILDING 13
MWTH

ARCHITECTURAL
ELEVATION
AT GRID LINE 5

SCALE: AS SHOWN | SHEET NO. A116
DWG. NO. 31001-A-001 | REV 1

REV	DATE	BY	QA	DATE	DESCRIPTION
1	7/09/14	SDN			PERMIT MODIFICATION REQUEST 135
0	2/14/98	KC			RELEASE FOR CONSTRUCTION

REVISION

Copy
Review & Recycle

DRAWING AND CONTENTS
REMOVED FROM PERMIT.

1

REV	DATE	BY	QA	DATE	DESCRIPTION
1	7/09/14	SDN			PERMIT MODIFICATION REQUEST 135
0	2-14-98	LC			RELEASED FOR CONSTRUCTION

REVISION

PermaFix®
environmental services
A Nuclear Services and Waste Management Company

DATE	
DRAWN	
CHECKED	
DFTG APVD	
ENGR	
APVD	
OTHER	
QA	
APPVD FOR IMPLEMENTATION BY	
FOR	DATE

MIXED WASTE FACILITY
BUILDING 13

ARCHITECTURAL
2ND FLOOR PLAN

SCALE: AS SHOWN | SHEET NO. A131

DWG. NO. 31001-A-001 | REV 1

Copy
Review & Recycle

SWING DOOR SCHEDULE
FOR STABL/ANNEX/MWTH

NO.	SIZE	NEW(N) / EXIST(E)	DESCRIPTION	LOCATION	DETAILS	NOTES
1	3'W X7'H	E	METAL FRAME, TYPE A	AT 7 BETW. A & B	SEE DETAILS 1~11 A08, 20~21 A08	1
2	3'W X7'H	E	METAL FRAME, TYPE A	AT A BETW. 4 & 5	SEE DETAILS 1~11 A08, 20~21 A08	1
3	3'W X7'H	E	METAL FRAME, TYPE A	AT 1 BETW. B & C	SEE DETAILS 1~11 A08, 20~21 A08	1
4	3'W X7'H	E	METAL FRAME, TYPE A	AT 1 BETW. C & D	SEE DETAILS 1~11 A08, 20~21 A08	1
5	3'W X7'H	E	METAL FRAME, TYPE A	AT E BETW. 4 & 5	SEE DETAILS 1~11 A08, 20~21 A08	1
6	3'W X7'H	E	METAL FRAME, TYPE A	AT B BETW. 5 & 6	SEE DETAILS 1~11 A08, 20~21 A08	2
7	3'W X7'H	N	METAL FRAME, TYPE A	AT A BETW. 6 & 7	SEE DETAILS 1~11 A08, 20~21 A08	
8	3'W X7'H	N	METAL FRAME, TYPE A	AT 6~7 BETW. A & B	SEE DETAILS 1~11 A08, 20~21 A08	
9	3'W X7'H	N	METAL FRAME, TYPE A	AT 5~6 BETW. A & B	SEE DETAILS 1~11 A08, 20~21 A08	
10	3'W X7'H	N	METAL FRAME, TYPE A	AT A~B BETW. 6 & 7	SEE DETAILS 1~11 A08, 20~21 A08	
20	3'W X7'H	N	METAL FRAME, TYPE A	AT 5~6 BETW. H & H1	SEE DETAILS 1~11 A08, 20~21 A08	
21	3'W X7'H	N	METAL FRAME, TYPE A	AT 7 BETW. H & H1	SEE DETAILS 1~11 A08, 20~21 A08	
22	3'W X7'H	N	METAL FRAME, TYPE A	AT 1 BETW. F & G	SEE DETAILS 1~11 A08, 20~21 A08	
23	3'W X7'H	N	METAL FRAME, TYPE A	AT L~K BETW. 5 & 6	SEE DETAILS 1~11 A08, 20~21 A08	
24	3'W X7'H	N	METAL FRAME, TYPE A	AT 5 BETW. K & L	SEE DETAILS 1~11 A08, 20~21 A08	
25	3'W X7'H	N	METAL FRAME, TYPE A	AT 3~4 BETW. L & M	SEE DETAILS 1~11 A08, 20~21 A08	
26	3'W X7'H	N	METAL FRAME, TYPE A	AT 3 BETW. J1 & K	SEE DETAILS 1~11 A08, 20~21 A08	
27	3'W X7'H	N	METAL FRAME, TYPE A	AT J1 BETW. 3 & 4	SEE DETAILS 1~11 A08, 20~21 A08	
28	3'W X7'H	N	METAL FRAME, TYPE A	AT 3 BETW. H & H1	SEE DETAILS 1~11 A08, 20~21 A08	
29	3'W X7'H	N	METAL FRAME, TYPE A	AT 6 BETW. H1 & H.2	SEE DETAILS 1~11 A08, 20~21 A08	
30	3'W X7'H	N	METAL FRAME, TYPE A	AT 7 BETW. N & P	SEE DETAILS 1~11 A08, 20~21 A08	
31	3'W X7'H	N	METAL FRAME, TYPE A	AT 4 BETW. N & P	SEE DETAILS 1~11 A08, 20~21 A08	
32	3'W X7'H	N	METAL FRAME, TYPE A	AT E BETW. 1 & 2	SEE DETAILS 1~11 A08, 20~21 A08	
33	3'W X7'H	N	METAL FRAME, TYPE A	AT E BETW. 2 & 3	SEE DETAILS 1~11 A08, 20~21 A08	
34	3'W X7'H	N	METAL FRAME, TYPE A	AT 3 BETW. J & J1	SEE DETAILS 1~11 A08, 20~21 A08	
35	3'W X7'H	N	METAL FRAME, TYPE A	AT 7 BETW. K & L	SEE DETAILS 1~11 A08, 20~21 A08	
36	3'W X7'H	N	METAL FRAME, TYPE A	AT 7 BETW. L & M	SEE DETAILS 1~11 A08, 20~21 A08	

NOTE :
1. Swing door to be raised to top of curb.
2. Door to be removed and reused in other location.

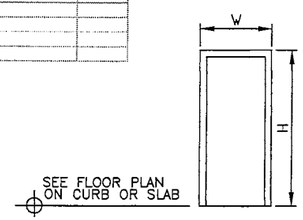

TYPE A

ROLL-UP DOOR SCHEDULE
FOR STABL/ANNEX/MWTH

NO.	SIZE	NEW(N) / EXIST(E)	DESCRIPTION	LOCATION	DETAILS	NOTES
1	12'W X12'H	E	METAL FRAME, TYPE B	AT 7 BETW. A & B	SEE DETAILS 23~25 A08	2
2	8'W X12'H	N	METAL FRAME, TYPE B	AT 7 BETW. C & D	SEE DETAILS 23~25 A08	1
3	10'W X12'H	N	METAL FRAME, TYPE B	AT 7 BETW. D & E	SEE DETAILS 23~25 A08	1
4	12'W X12'H	E	METAL FRAME, TYPE B	AT 1 BETW. B & C	SEE DETAILS 23~25 A08	1
5	12'W X12'H	E	METAL FRAME, TYPE B	AT 1 BETW. C & D	SEE DETAILS 23~25 A08	1
6	12'W X12'H	E	METAL FRAME, TYPE B	AT A BETW. 4 & 5	SEE DETAILS 23~25 A08	
7	12'W X12'H	E	METAL FRAME, TYPE B	AT E BETW. 4 & 5	SEE DETAILS 23~25 A08	
8	12'W X12'H	N	METAL FRAME, TYPE B	AT 5 BETW. D & E	SEE DETAILS 23~25 A08	
9	12'W X12'H	N	METAL FRAME, TYPE B	AT 5 BETW. B & C	SEE DETAILS 23~25 A08	
10	8'W X12'H	N	METAL FRAME, TYPE B	AT E BETW. 2 & 3	SEE DETAILS 23~25 A08	
11	11'W X12'H	N	METAL FRAME, TYPE B	AT E BETW. 1 & 2	SEE DETAILS 23~25 A08	
20	10'W X12'H	N	METAL FRAME, TYPE B	AT 7 BETW. F & G	SEE DETAILS 23~25 A08	
21	10'W X12'H	N	METAL FRAME, TYPE B	AT 7 BETW. G & H	SEE DETAILS 23~25 A08	
22	12'W X12'H	N	METAL FRAME, TYPE B	AT 3 BETW. H & H2	SEE DETAILS 23~25 A08	
23	8'W X12'H	N	METAL FRAME, TYPE B	AT H BETW. 2 & 3	SEE DETAILS 23~25 A08	
24	12'W X12'H	N	METAL FRAME, TYPE B	AT H BETW. 1 & 2	SEE DETAILS 23~25 A08	
25	8'W X12'H	N	METAL FRAME, TYPE B	AT 7 BETW. H2 & J	SEE DETAILS 23~25 A08	
26	12'W X16'H	N	METAL FRAME, TYPE B	AT M BETW. 5 & 6	SEE DETAILS 23~25 A08	
27	12'W X16'H	N	METAL FRAME, TYPE B	AT P BETW. 5 & 6	SEE DETAILS 23~25 A08	
28	10'W X12'H	N	METAL FRAME, TYPE B	AT 3 BETW. L & M	SEE DETAILS 23~25 A08	
29	10'W X12'H	N	METAL FRAME, TYPE B	AT 3 BETW. K & L	SEE DETAILS 23~25 A08	
30	12'W X12'H	N	METAL FRAME, TYPE B	AT 3 BETW. J & J1	SEE DETAILS 23~25 A08	
31	12'W X16'H	N	METAL FRAME, TYPE B	AT P BETW. 4 & 5	SEE DETAILS 23~25 A08	

NOTE :
1. Cut lower portion of door jam to rest on top of curb.
2. Door to be removed and reused in other location.

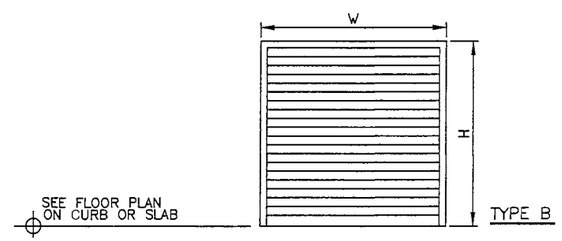

TYPE B

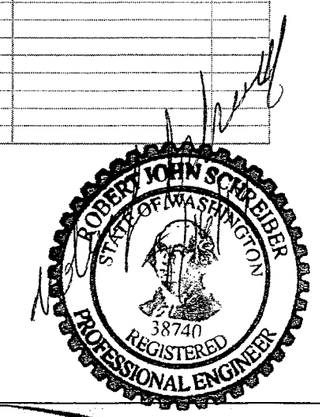

REV	DATE	BY	QA	DESCRIPTION
2	8/13/14	SDN		PERMIT MODIFICATION REQUEST 135
1A	2-22-99	LC		RELEASED FOR BID
0	2-14-98	LC		RELEASED FOR CONSTRUCTION

REVISION

PermaFix® environmental services
A Nuclear Services and Waste Management Company

DATE	
DRAWN	
CHECKED	
DFTG APVD	
ENGR	
APVD	
OTHER	
QA	
APPVD FOR IMPLEMENTATION BY	
FOR	DATE

MIXED WASTE FACILITY
STABILIZATION & MWTH

ARCHITECTURAL
SCHEDULES

SCALE: NONE | SHEET NO. A141
DWG. NO. 31001-A-001 | REV 2

Copy
Review & Recycle

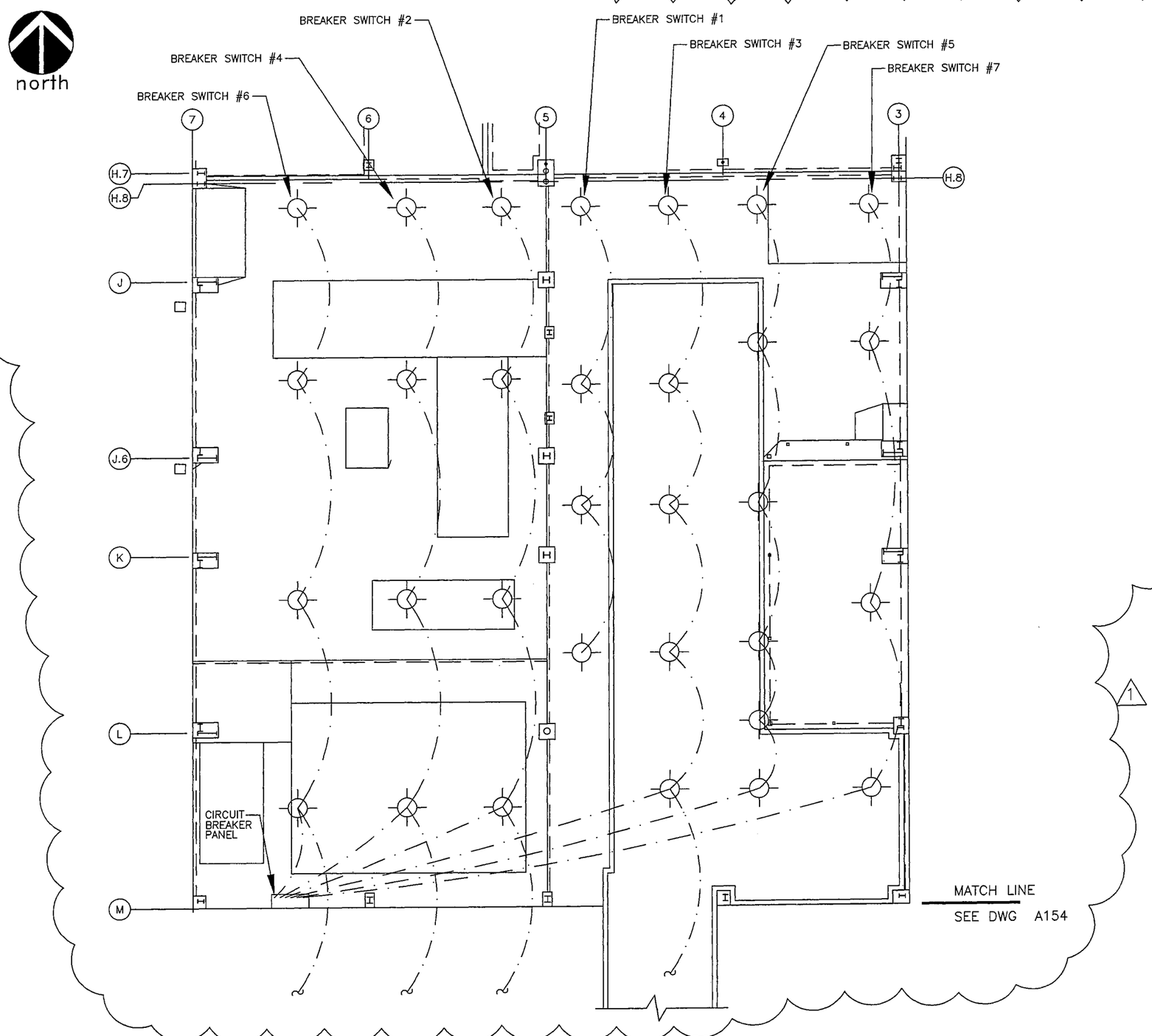

NOTES:

1) CIRCUIT BREAKERS LOCATED IN PANEL GV-L41-K6 IN ROOM MWT-02.

LEGEND

INTERIOR SUSPEND HIGH SOLDIUM LIGHT

ELECTRICAL WIRING

ROBERT JOHN SCHREIBER
STATE OF WASHINGTON
38740
REGISTERED
PROFESSIONAL ENGINEER

REFLECTED CEILING PLAN

SCALE: 1/16"=1'-0"

REV	DATE	BY	QA	DATE	DESCRIPTION
1	7/16/14	SDN			PERMIT MODIFICATION REQUEST 135
0	2/14/98	KC			RELEASE FOR CONSTRUCTION

REVISION

PermaFix®
environmental services
A Nuclear Services and Waste Management Company

DATE	
DRAWN	
CHECKED	
DFTG APVD	
ENGR	
APVD	
OTHER	
QA	
APPVD FOR IMPLEMENTATION BY	
FOR	DATE

MIXED WASTE FACILITY
BUILDING 13
MWTH

1 ARCHITECTURAL REFLECT CEILING

SCALE: AS SHOWN | SHEET NO. A153

DWG. NO. 31001-A-001 | REV 1

Copy
Review & Recycle

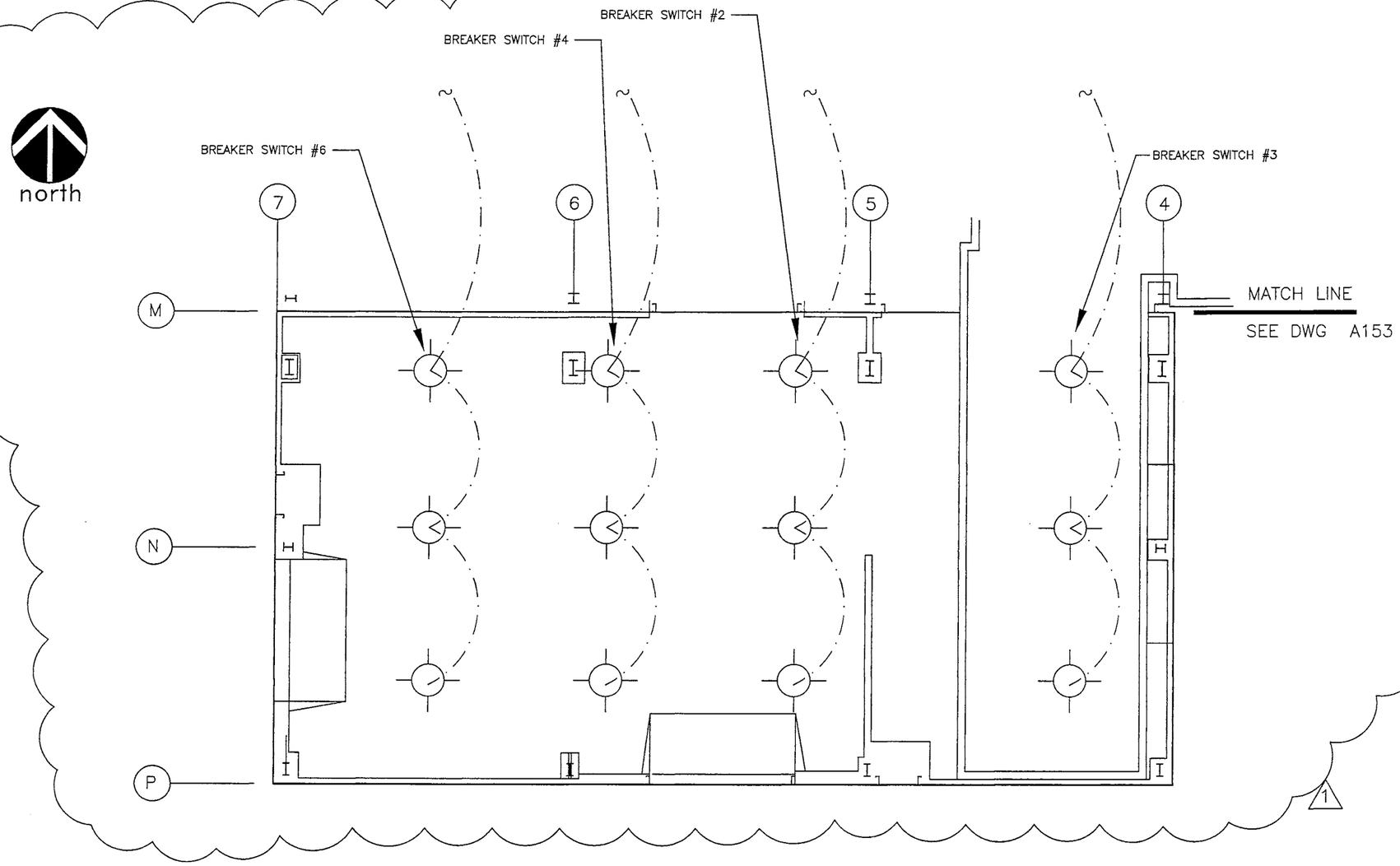

NOTES:

1) CIRCUIT BREAKERS LOCATED IN PANEL GV-L41-K6 IN ROOM MWT-02 ON SOUTH WALL.

LEGEND

INTERIOR SUSPEND HIGH SOLDIUM LIGHT

ELECTRICAL WIRING

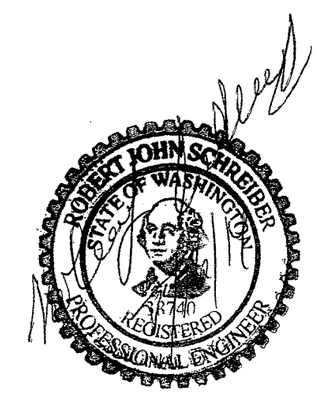

REFLECTED CEILING PLAN

SCALE: 1/16"=1'-0"

REV	DATE	BY	QA	DATE	DESCRIPTION
1	7/09/14	SDN			RENEWAL APPLICATION
0	2/14/98	KC			RELEASE FOR CONSTRUCTION

REVISION

PermaFix® environmental services
A Nuclear Services and Waste Management Company

DATE	
DRAWN	
CHECKED	
DFTG APVD	
ENGR	
APVD	
OTHER	
QA	
APPVD FOR IMPLEMENTATION BY	
FOR	DATE

MIXED WASTE FACILITY
BUILDING 13
MWTH

ARCHITECTURAL
REFLECT CEILING

SCALE: AS SHOWN | SHEET NO. A154

DWG. NO. 31001-A-001 | REV 1

Copy
Review & Recycle

DRAWING AND CONTENTS
REMOVED FROM PERMIT.

1

REV	DATE	BY	QA	DATE	DESCRIPTION
1	7/09/14	SDN			PERMIT MODIFICATION REQUEST 135
0	2/14/98	KC			RELEASE FOR CONSTRUCTION

REVISION

PermaFix®
environmental services
A Nuclear Services and Waste Management Company

DATE	
DRAWN	
CHECKED	
DFTG APVD	
ENGR	
APVD	
OTHER	
QA	
APPVD FOR IMPLEMENTATION BY_____ FOR DATE	

MIXED WASTE FACILITY
BUILDING 13

ARCHITECTURAL
REFLECT CLG.
2ND FLOOR

SCALE: AS SHOWN | SHEET NO. A155

DWG. NO. 31001-A-001 | REV 1

Copy
Review & Recycle

GENERAL CONSTRUCTION NOTES

1. THESE NOTES ARE GENERAL AND APPLY TO ALL DRAWINGS UNLESS OTHERWISE SHOWN OR NOTED.
2. ALL WORK SHALL BE DONE IN ACCORDANCE WITH THE PROJECT SPECIFICATIONS AND THE UNIFORM BUILDING CODE, 1998 EDITION.
3. THE CONTRACTOR SHALL VERIFY ALL DIMENSIONS ON THE JOB SITE AND CONTRACT DRAWINGS. WHERE CONFLICT OCCURS, THE CONTRACTOR SHALL NOT ORDER MATERIAL OR START TO BUILD CONFLICTED PORTIONS UNTIL THE CONFLICT HAS BEEN RESOLVED.
4. NO ALTERNATE DESIGN OR SUBSTITUTION OF MEMBERS SHALL BE USED WITHOUT PRIOR APPROVAL FROM THE ENGINEER.
5. ANCHOR BOLT TEMPLATES SHOULD BE USED FOR ALIGNMENT OF ANCHOR BOLTS FOR PRE-INSTALLATION FITTING AND FOR PROPER CENTERING OF THE COLUMNS ON THE SUPPORTING STRUCTURE BELOW.
6. MAINTAIN MINIMUM OR BETTER EDGE CLEARANCE (CONCRETE COVER) WITH REINFORCING, PER CHAPTER 19 OF THE 1998 EDITION OF THE UNIFORM BUILDING CODE.
7. THE CONTRACTOR SHALL VERIFY ALL DIMENSIONS AND SITE CONDITIONS BEFORE STARTING WORK. THE ATG FIELD ENGINEER SHALL BE NOTIFIED OF ANY DISCREPANCY. USE DETAILS MARKED "TYPICAL" WHEREVER APPLICABLE, U.N.O.
8. SHORING AND BRACING SHALL BE THE SOLE RESPONSIBILITY OF THE CONTRACTOR TO ENSURE THAT SAFETY AND STRUCTURAL INTEGRITY IS NOT COMPROMISED PRIOR TO STARTING OF ANY WORK AND DURING THE ENTIRE CONSTRUCTION.
9. ALL BUILDING COLUMNS AND VERTICAL LOAD-CARRYING MEMBERS IN CONTACT WITH THE FOUNDATION MUST BE CENTERED OVER THE FOOTINGS, UNLESS NOTED OR SHOWN OTHERWISE.
10. ANCHOR BOLT TEMPLATES MUST BE SUPPLIED BY THE PRE-FABRICATED BUILDING MANUFACTURER FOR PRE-INSTALLATION FITTING AND FOR PROPER CENTERING OF THE COLUMNS ON THE SPREAD FOOTINGS.
11. FOR BUILDING COLUMN AND DOOR OPENING ANCHORAGE, SEE BUILDING VENDOR PLANS, FOR EQUIPMENT FOUNDATIONS AND ANCHORAGES, SEE EQUIPMENT VENDOR DRAWINGS.
12. ENTIRE LENGTH OF RAMP CURB WALL BASE AND RAMP BASE SLAB WILL HAVE APPROVED "GREENHECK" OR "BURKE" FLUID BARRIER INSERTS (SIMILAR TO PVC WATERSTOPS) CAST INTEGRALLY W/CONCRETE UNIT BEING PLACED, IN SUCH A MANNER AS TO RENDER THE EXPOSED JOINTS IMPERVIOUS TO FLUID MIGRATION. IT SHALL BE THE RESPONSIBILITY OF THE CONTRACTOR TO ESTABLISH AND VERIFY THE PRODUCT REQUIREMENTS PRIOR TO PLACING OF THE FOOTING FOUNDATION SYSTEM.
13. IT SHALL BE THE RESPONSIBILITY OF THE GENERAL CONTRACTOR TO SELECT THE METHOD OF CONSTRUCTION FOR THE RAMPS AND STAIRS AT ALL DOOR & OPENING LOCATIONS.
14. NOT USED
15. NOT USED
16. THE CONTRACTOR SHALL COORDINATE HIS/HER WORK RELATED TO ALL SLAB SLOPE WITH THE ALLIED TECHNOLOGIES FIELD ENGINEER.

DESIGN LOADS

UNIFORMED BUILDING CODE 1998 EDITION
LIVE LOAD FOR ROOF ..... 25 PSF
SNOW LOAD FOR ROOF ..... 30 PSF
LIVE LOAD FOR SLAB ON GRADE ..... H-20 OR FORKLIFT OF 10,000# CAPACITY
LIVE LOAD FOR PLATFORM, STAIRS ..... PER UBC
BASIC WIND SPEED PER UBC ..... 70 MPH, EXPOSURE C
SEISMIC LOAD PER UBC ..... ZONE 2B, I=1

SITE PREPARATION

1. ALL EXCAVATION, ENGINEERING BACKFILL AND SUBGRADE COMPACTION SHALL BE IN ACCORDANCE WITH PROJECT SPECIFICATIONS, CONTRACT PLANS AND THE REQUIREMENTS OF GEOTECHNICAL INVESTIGATION AND SOIL REPORT RECOMMENDATIONS BY SHANNON & WILSON, INC.
2. ALL SUBGRADE UNDER SLAB AND FOOTINGS SHOULD MEET THE MINIMUM COMPACTION REQUIREMENT OF 90% OR HIGHER AS SPECIFIED BY THE GEOTECHNICAL ENGINEER.
3. FOR ANY ADDITIONAL REQUIREMENTS, SEE CIVIL DRAWINGS 31001-C-001 & 004, AND SPECIFICATION 31001-SP-SB07

PRE-ENGINEERED BUILDINGS

1. ALL BUILDINGS (ACCESS CONTROL BUILDING, WASTE STORAGE BUILDING, STABILIZATION ANNEX BUILDING AND MWTH BUILDING) SHOWN ON THIS DRAWING SHALL BE PRE-ENGINEERED PACKAGE PROVIDED BY THE CONTRACTOR.
2. CONTRACTOR SHALL PREPARE THE COMPLETE DESIGN OF THE PRE-ENGINEERED BUILDINGS FOR APPROVAL BY ATG.
3. CONTRACTOR SHALL BE RESPONSIBLE FOR COMPLIANCE WITH FEDERAL, STATE, AND CITY CODES AND STANDARDS.
4. CONTRACTOR SHALL BE RESPONSIBLE FOR OBTAINING ALL NECESSARY BUILDING PERMITS AND APPROVAL OF THE PRE-ENGINEERED BUILDING DESIGN PACKAGE.

LEGEND

A / SXXX — SECTION NO. / SHEET NO.

1 / SXXX — DETAIL NO. / SHEET NO.

FXX — FOOTING TYPE

REV	DATE	BY	QA	DATE	DESCRIPTION
2	7/09/14	SDN			PERMIT MODIFICATION REQUEST 135
1A	2-21-99	LC			RELEASED FOR BID
0	2-14-98	LC			RELEASED FOR CONSTRUCTION

REVISION

PermaFix® environmental services
A Nuclear Services and Waste Management Company

DATE	
DRAWN	
CHECKED	
DFTG APVD	
ENGR	
APVD	
OTHER	
QA	
APPVD FOR IMPLEMENTATION BY_____ FOR DATE	

MIXED WASTE FACILITY
BUILDING 13

STRUCTURAL NOTES

SCALE: NONE | SHEET NO. S101
DWG. NO. 31001-S-001 | REV 2

Copy
Review & Recycle

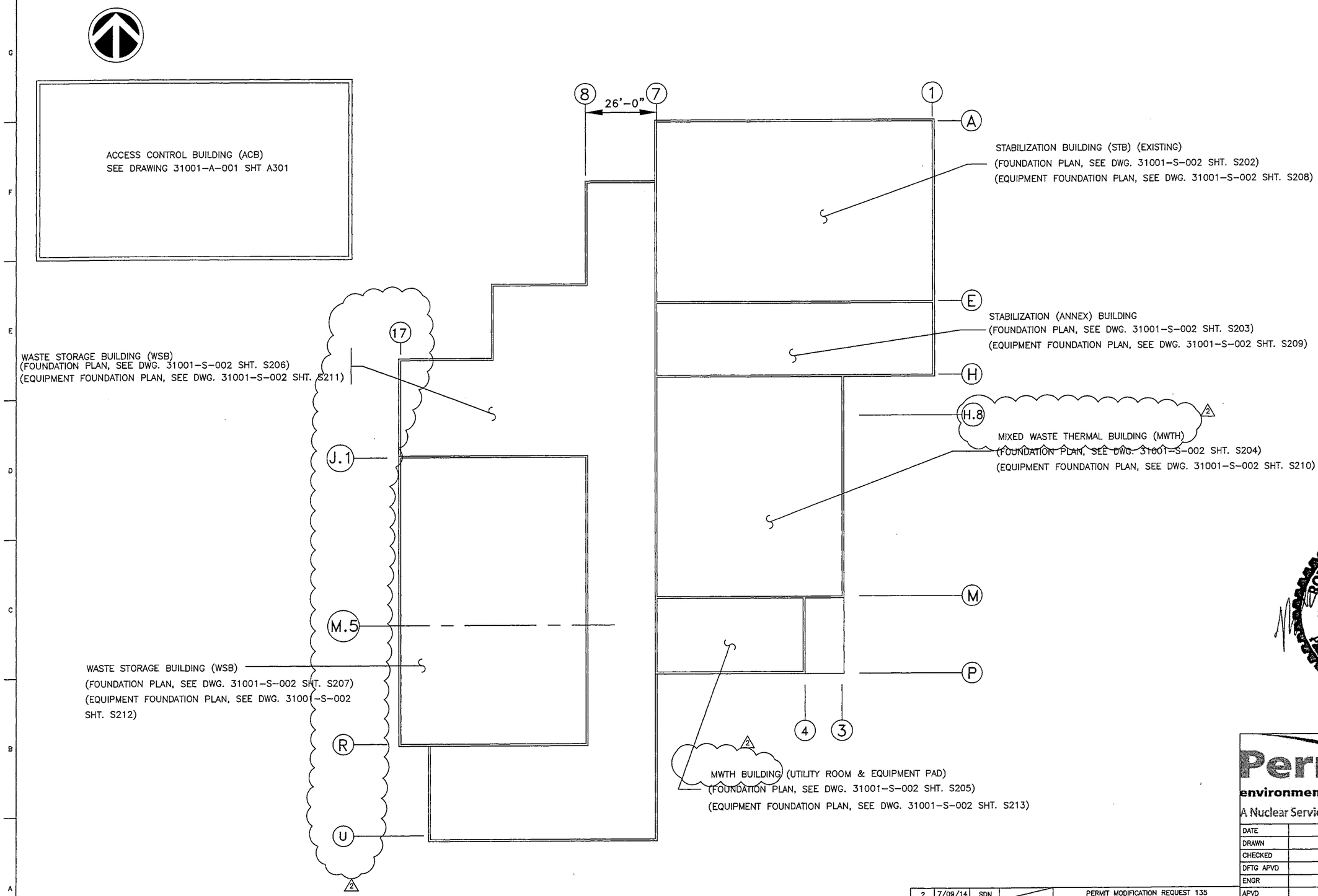

ROBERT JOHN SCHREIBER
STATE OF WASHINGTON
38740
REGISTERED
PROFESSIONAL ENGINEER

REV	DATE	BY	QA	DATE	DESCRIPTION
2	7/09/14	SDN			PERMIT MODIFICATION REQUEST 135
1A	2-22-99	LC			RELEASED FOR BID
0	2-14-98	LC			RELEASED FOR CONSTRUCTION

REVISION

PermaFix®
environmental services
A Nuclear Services and Waste Management Company

DATE	
DRAWN	
CHECKED	
DFTG APVD	
ENGR	
APVD	
OTHER	
QA	
APPVD FOR IMPLEMENTATION BY	
FOR DATE	

MIXED WASTE FACILITY
BUILDING 13

STRUCTURAL
BLDG & EQUIP FOUNDATION
KEY PLAN

SCALE: AS SHOWN | SHEET NO. S201

DWG. NO. 31001-S-001 | REV 2

Copy
Review & Recycle

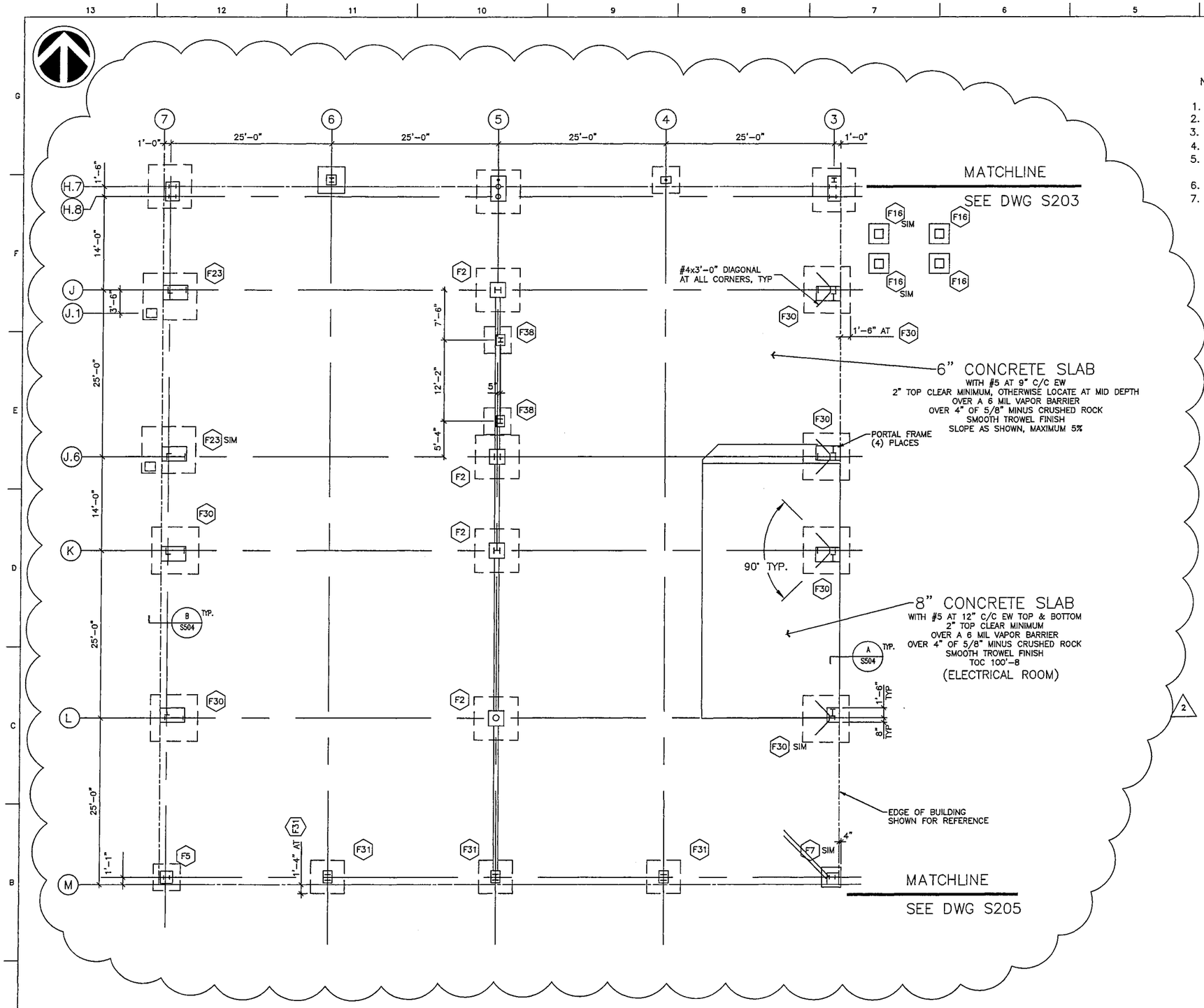

NOTES :

1. FOR GENERAL CONSTRUCTION NOTE – REFER TO DWG. S101, AND 102
2. FOR FOOTING DETAILS, SEE FOOTING SCHEDULE ON DWG. NO. S406
3. FOR EQUIPMENT FOUNDATION, REFER TO DWG. NO. S210
4. FOR REINFORCING AT CURB, AND RAMP – REFER TO DWG. NO. 31001–S–005
5. FOR CONSTRUCTION JOINTS (C.J.), EXPANSION JOINTS (E.J.) AND TOOLED JOINTS (T.J.), SEE DRAWING S402.
6. FOR TOP OF CURB AND SLAB ELEVATION, SEE DWG. NO. S302
7. FOR CONCRETE FINISH, SEE ARCHITECTURAL DRAWINGS.

PermaFix®
environmental services
A Nuclear Services and Waste Management Company

REV	DATE	BY	QA	DATE	DESCRIPTION
2	7/09/14	SDN			PERMIT MODIFICATION REQUEST 135
A1	–	–			PER 31001–DCA–00X
1A	2–22–99	LC			RELEASED FOR BID
0	2–14–98	LC			RELEASED FOR CONSTRUCTION

REVISION

DATE	
DRAWN	
CHECKED	
DFTG APVD	
ENGR	
APVD	
OTHER	
QA	
APPVD FOR IMPLEMENTATION BY	
FOR	DATE

MIXED WASTE FACILITY
BUILDING T3
MWTH
STRUCTURAL
FOUNDATION PLAN

SCALE: 1/16"=1'-0"
SHEET NO. S204
DWG. NO. 31001–S–002
REV 2

Xref H:\Current Drawings\31001 MW\XREFS\border.dwg

Copy
Review & Recycle

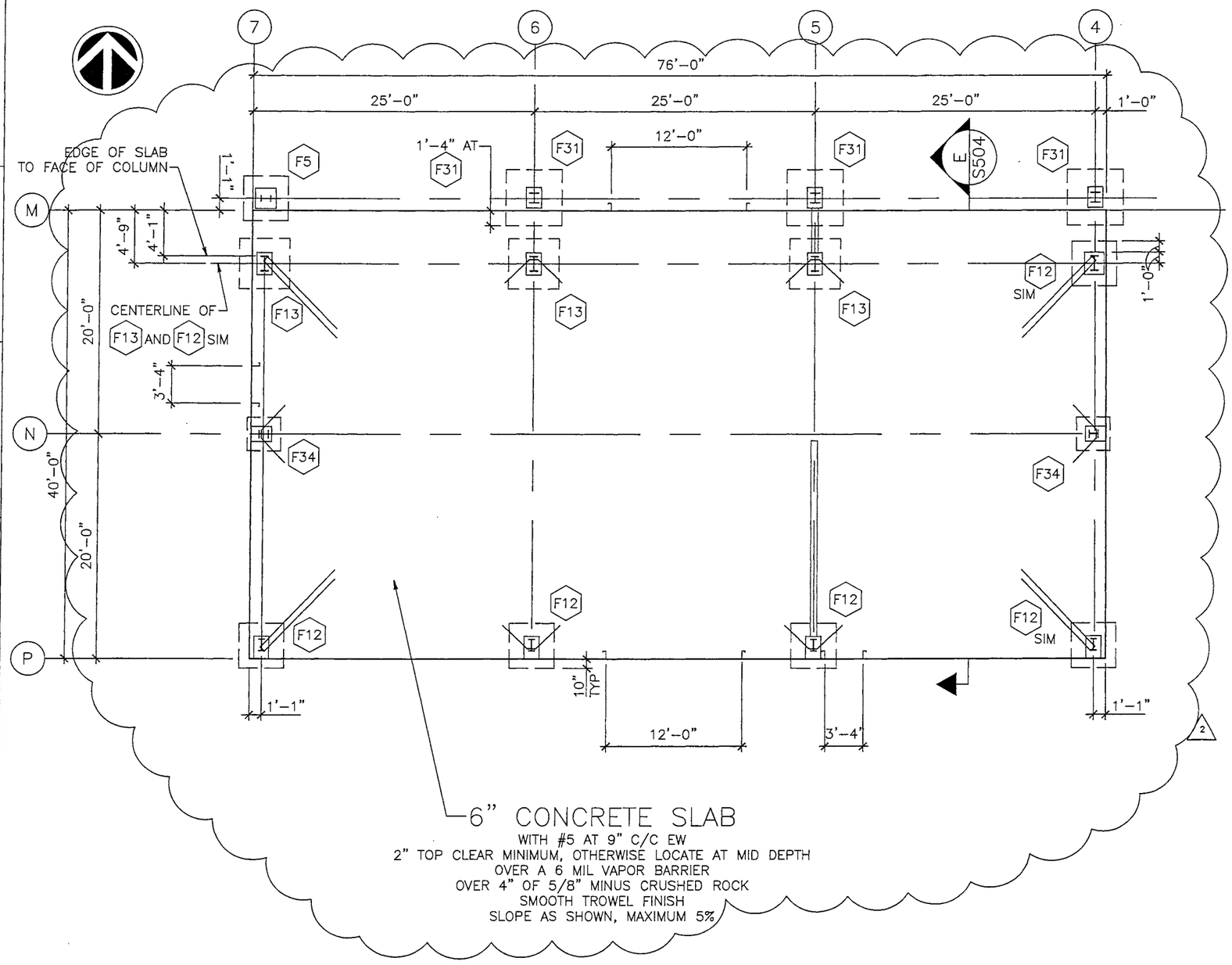

MATCHLINE

SEE DWG S204

NOTES :

1. FOR GENERAL CONSTRUCTION NOTE – REFER TO DWG. S101, AND 102
2. FOR FOOTING DETAILS, SEE FOOTING SCHEDULE ON DWG. NO. S406
3. FOR EQUIPMENT FOUNDATION, REFER TO DWG. NO. S210
4. FOR REINFORCING AT CURB, AND RAMP – REFER TO DWG. NO. 31001–S–005
5. FOR CONSTRUCTION JOINTS (C.J.), EXPANSION JOINTS (E.J.) AND TOOLED JOINTS (T.J.), SEE DRAWING S402.
6. FOR TOP OF CURB AND SLAB ELEVATION, SEE DWG. NO. S302
7. FOR CONCRETE FINISH, SEE ARCHITECTURAL DRAWINGS.

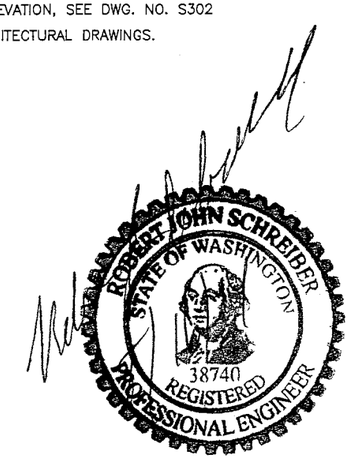

REV	DATE	BY	QA	DATE	DESCRIPTION
2	7/09/14	SDN			PERMIT MODIFICATION REQUEST 135
1A	2–22–99	LC			RELEASED FOR BID
0	2–14–98	LC			RELEASED FOR CONSTRUCTION

REVISION

PermaFix®
environmental services
A Nuclear Services and Waste Management Company

DATE	
DRAWN	
CHECKED	
DFTG APVD	
ENGR	
APVD	
OTHER	
QA	
APPVD FOR IMPLEMENTATION BY.	
FOR	DATE

MIXED WASTE FACILITY
BUILDING 13
MWTH

STRUCTURAL
FOUNDATION PLAN

SCALE: 3/32"=1'-0" | SHEET NO. S205

DWG. NO. 31001–S–002 | REV 2

Copy
Review & Recycle

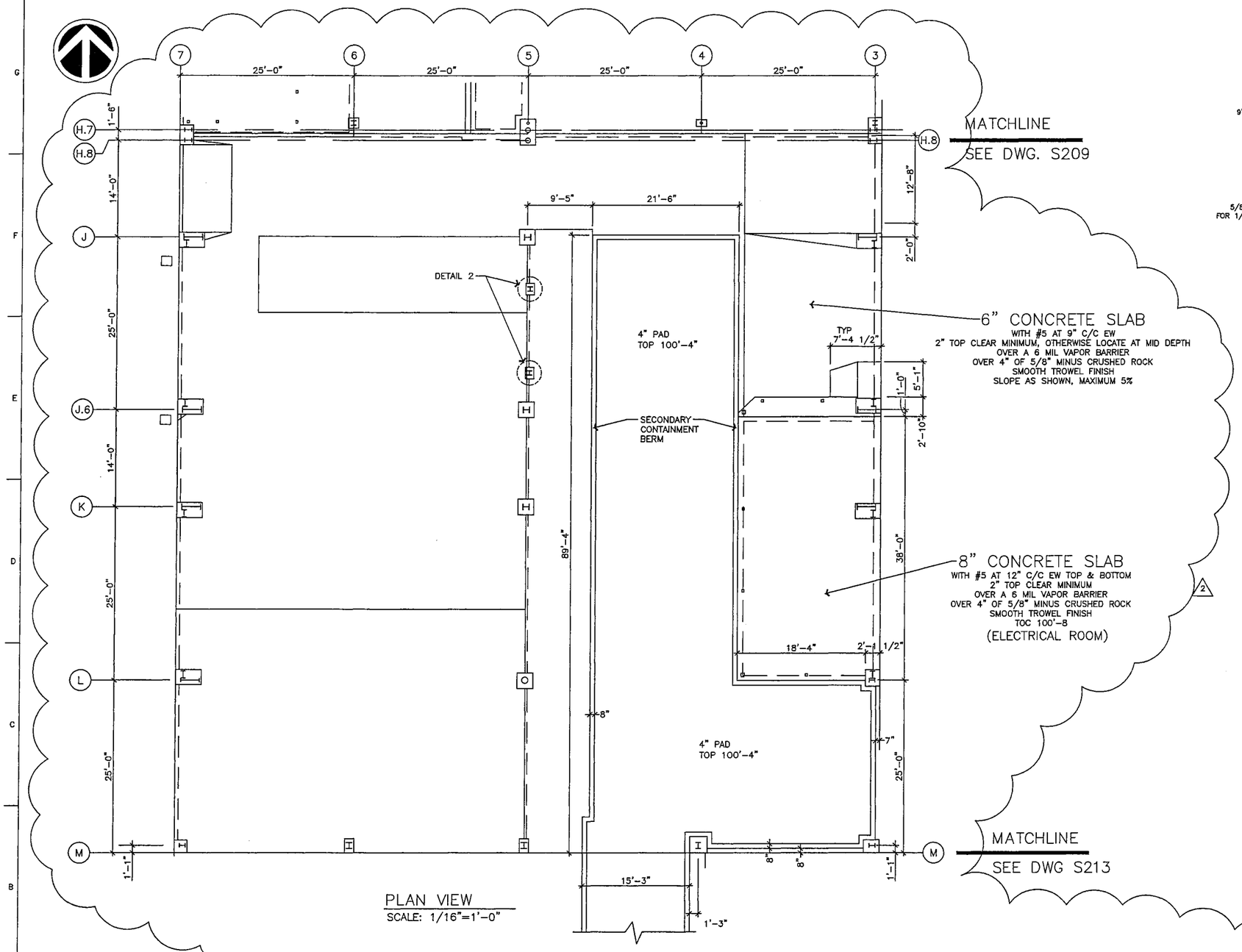

MATCHLINE
SEE DWG. S209

6" CONCRETE SLAB
WITH #5 AT 9" C/C EW
2" TOP CLEAR MINIMUM, OTHERWISE LOCATE AT MID DEPTH
OVER A 6 MIL VAPOR BARRIER
OVER 4" OF 5/8" MINUS CRUSHED ROCK
SMOOTH TROWEL FINISH
SLOPE AS SHOWN, MAXIMUM 5%

8" CONCRETE SLAB
WITH #5 AT 12" C/C EW TOP & BOTTOM
2" TOP CLEAR MINIMUM
OVER A 6 MIL VAPOR BARRIER
OVER 4" OF 5/8" MINUS CRUSHED ROCK
SMOOTH TROWEL FINISH
TOC 100'-8
(ELECTRICAL ROOM)

MATCHLINE
SEE DWG S213

PLAN VIEW
SCALE: 1/16"=1'-0"

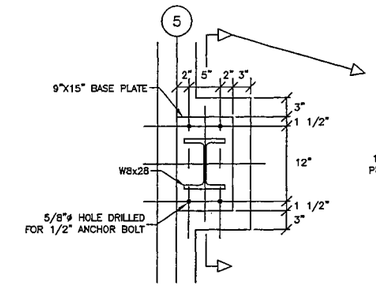

2 DETAIL
SCALE: NONE

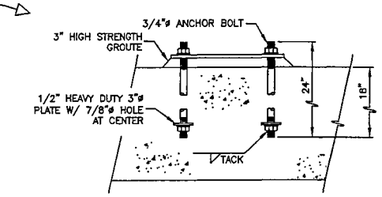

SECTION
SCALE: NONE

PermaFix®
environmental services
A Nuclear Services and Waste Management Company

REV	DATE	BY	QA	DATE	DESCRIPTION
2	7/09/14	SDN			PERMIT MODIFICATION REQUEST 135
A1	–	CR			PER 31001–DCA–00XX
0	2/7/00	–			ISSUED FOR PERMIT MOD APPROVAL
–	2/14/98	LC			RELEASE FOR CONSTRUCTION

REVISION

DATE	
DRAWN	
CHECKED	
DFTG APVD	
ENGR	
APVD	
OTHER	
QA	
APPVD FOR IMPLEMENTATION BY FOR DATE	

MIXED WASTE FACILITY
BUILDING 13

STRUCTURAL
EQUIPMENT LOCATION PLAN

SCALE: 1/16"=1'-0" | SHEET NO. S210
DWG. NO. 31001–S–002 | REV 2

Xref H:\Current Drawings\31001 MW\XREFS\border.dwg

Copy1
Review & Recycle

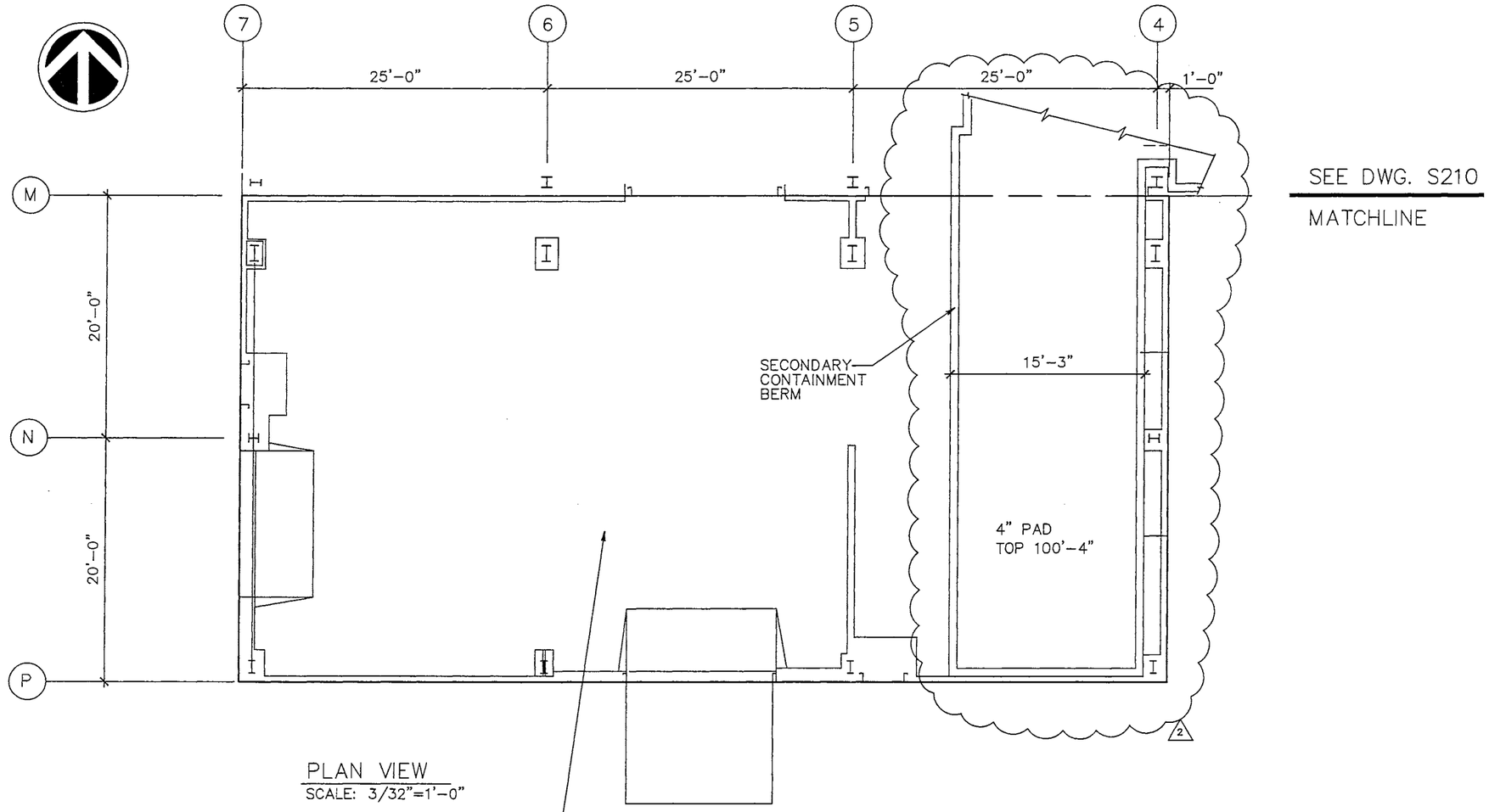

PLAN VIEW
SCALE: 3/32"=1'-0"

6" CONCRETE SLAB
WITH #5 AT 9" C/C EW
2" TOP CLEAR MINIMUM, OTHERWISE LOCATE AT MID DEPTH
OVER A 6 MIL VAPOR BARRIER
OVER 4" OF 5/8" MINUS CRUSHED ROCK
SMOOTH TROWEL FINISH
SLOPE AS SHOWN, MAXIMUM 5%

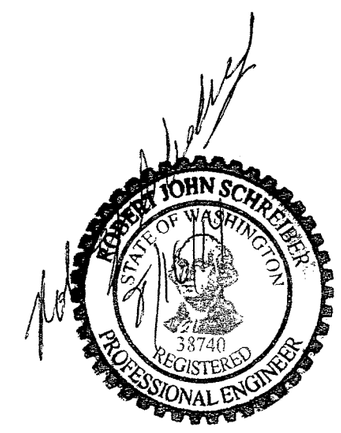

PermaFix®
environmental services
A Nuclear Services and Waste Management Company

REV	DATE	BY	QA	DATE	DESCRIPTION
2	7/10/14	SDN			PERMIT MODIFICATION REQUEST 135
1	2/14/98	–			ISSUED FOR PERMIT MOD APPROVAL
0	2/14/98	LC			RELEASE FOR CONSTRUCTION

REVISION

DATE	
DRAWN	
CHECKED	
DFTG APVD	
ENGR	
APVD	
OTHER	
QA	
APPVD FOR IMPLEMENTATION BY	
FOR	DATE

MIXED WASTE FACILITY
BUILDING 13
UTILITY BLDG (MWTH)

STRUCTURAL
EQUIPMENT LOCATION PLAN

SCALE: 3/32"=1'-0" | SHEET NO. S213
DWG. NO. 31001-S-002 | REV 2

Copy 1
Review & Recycle

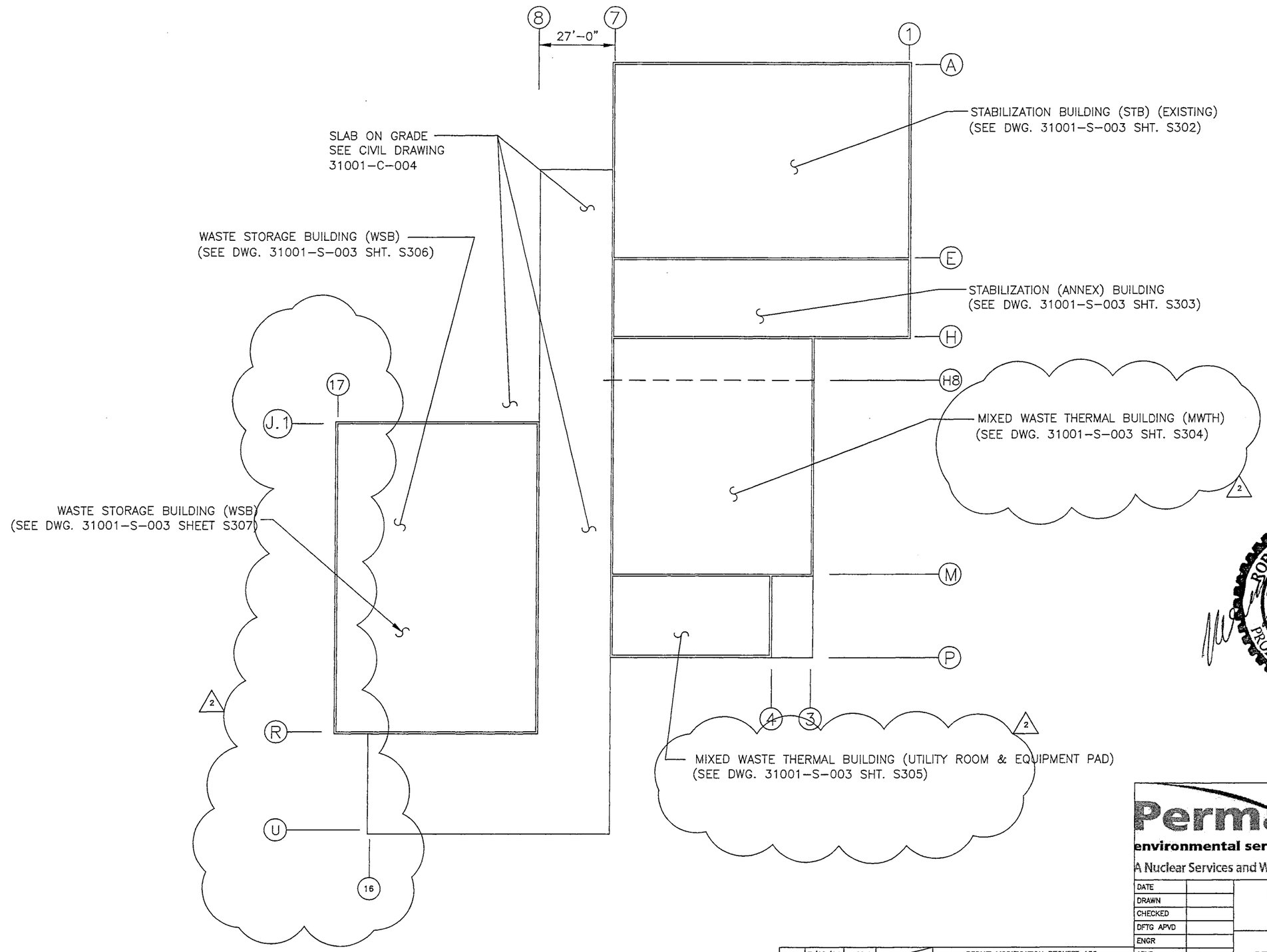

ROBERT JOHN SCHREIBER
STATE OF WASHINGTON
38740
REGISTERED
PROFESSIONAL ENGINEER

PermaFix®
environmental services
A Nuclear Services and Waste Management Company

REV	DATE	BY	QA	DATE	DESCRIPTION
2	7/10/14	SDN			PERMIT MODIFICATION REQUEST 135
1A	2-22-99	LC			RELEASED FOR BID
0	2-14-98	LC			RELEASED FOR CONSTRUCTION

REVISION

DATE	
DRAWN	
CHECKED	
DFTG APVD	
ENGR	
APVD	
OTHER	
QA	
APPVD FOR IMPLEMENTATION BY	
FOR	DATE

MIXED WASTE FACILITY
BUILDING 13

STRUCTURAL
SECONDARY CONTAINMENT
KEY PLAN

SCALE: NONE | SHEET NO. S301

DWG. NO. 31001-S-003 | REV 2

Copy
Review & Recycle

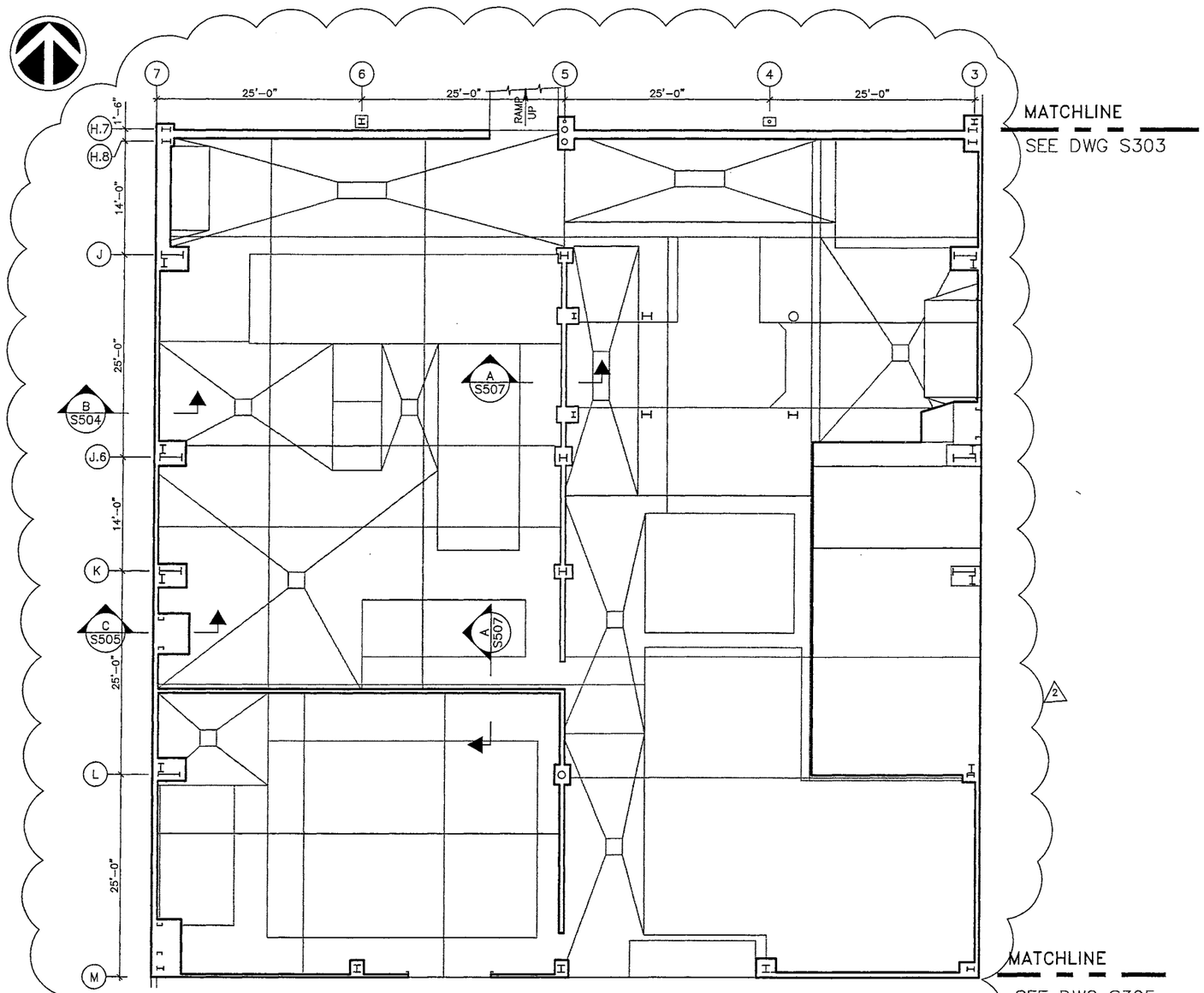

PLAN VIEW
SCALE: 1/16" = 1'-0"

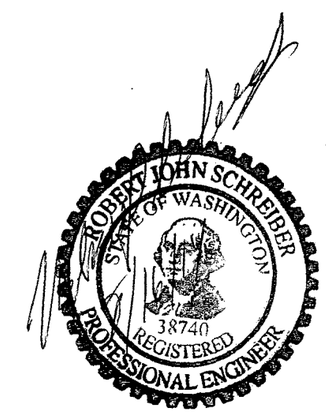

PermaFix®
environmental services
A Nuclear Services and Waste Management Company

REV	DATE	BY	QA	DATE	DESCRIPTION
2	7/10/14	SDN			PERMIT MODIFICATION REQUEST 135
A1	–	–			PER 31001–DCA–00XX
1A	2–22–99	LC			RELEASED FOR BID
A	–	–			RELEASED FOR PROCUREMENT
0	2–14–98	LC			RELEASED FOR CONSTRUCTION

REVISION

DATE	
DRAWN	
CHECKED	
DFTG APVD	
ENGR	
APVD	
OTHER	
QA	
APPVD FOR IMPLEMENTATION BY	
FOR DATE	

MIXED WASTE FACILITY
BUILDING 13
(MWTH) AREA

STRUCTURAL
SECONDARY CONTAINMENT

SCALE: AS SHOWN | SHEET NO. S304
DWG. NO. 31001–S–003 | REV 2

Xref H:\Current Drawings\31001 MW\XREFS\border.dwg

Copy
Review & Recycle

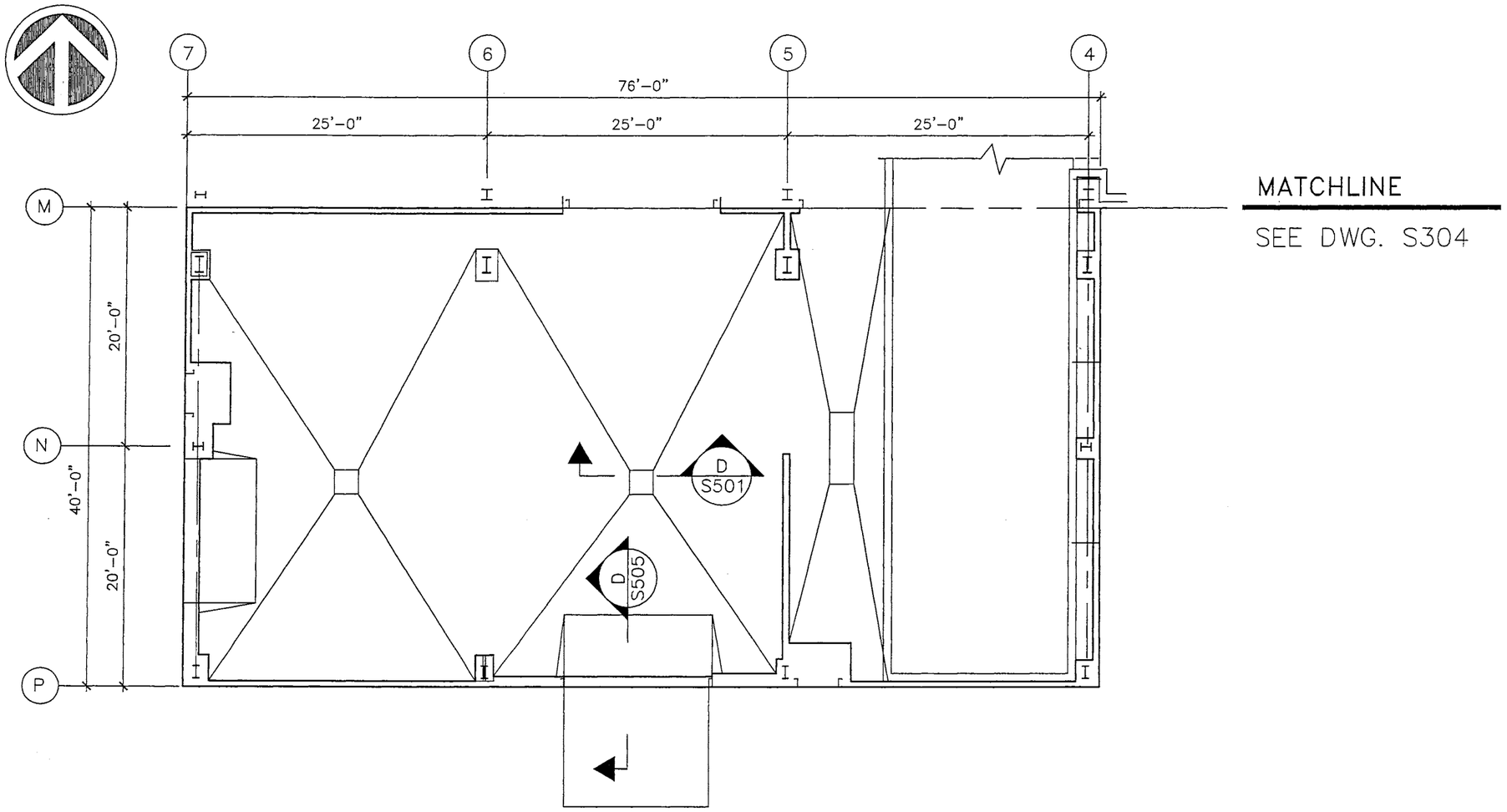

PLAN VIEW
3/32"=1'-0"

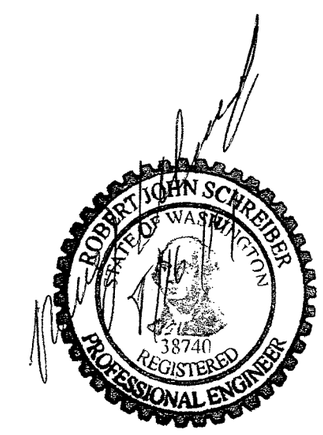

PermaFix®
environmental services
A Nuclear Services and Waste Management Company

REV	DATE	BY	QA	DATE	DESCRIPTION
2	7/22/14	SDN			PERMIT MODIFICATION REQUEST 135
1A	2-22-99				RELEASED FOR BID
0	2-14-98				RELEASED FOR CONSTRUCTION

REVISION

DATE	
DRAWN	
CHECKED	
DFTG APVD	
ENGR	
APVD	
OTHER	
QA	
APPVD FOR IMPLEMENTATION BY	
FOR	DATE

MIXED WASTE FACILITY
BUILDING 13

STRUCTURAL
SECONDARY CONTAINMENT

SCALE: 3/32"=1'-0" | SHEET NO. S305

DWG. NO. 31001-S-003 | REV 2

Copy
Review & Recycle

DRAWING AND CONTENTS REMOVED
FROM PERMIT

REV	DATE	BY	QA	DATE	DESCRIPTION
2	7/23/14				PERMIT MODIFICATION REQUEST 135
1A	2-22-99				RELEASED FOR BID
0	2-14-98				RELEASED FOR CONSTRUCTION

REVISION

PermaFix®
environmental services
A Nuclear Services and Waste Management Company

DATE	
DRAWN	
CHECKED	
DFTG APVD	
ENGR	
APVD	
OTHER	
QA	
APPVD FOR IMPLEMENTATION BY	
FOR	DATE

MIXED WASTE FACILITY
BUILDING 13

STRUCTURAL
PCB CONTAINMENT LOCATION

SCALE: AS SHOWN | SHEET NO. S309

DWG. NO. 31001-S-003 | REV 2

Copy
Review & Recycle

NO.	EQUIPMENT ON PAD/FOUNDATION	TAG NO.	PROPOSED EQUIPMENT FOUNDATION TYPE	DIMENSION L (ft.)	DIMENSION W (ft.)	DIMENSION E (ft.)	APPROXIMATE LOCATION (BETWEEN)	REMARKS
	MIXED WASTE THERMAL (MWTH) BUILDING							
1								
2								
3								
4								
5								
6								
7								
8								
9								
10								
11								
12								
13								
14								
15								
16								
17								
18								
19								
20								
21								
22								
23								
24								
25	AIR COMPRESSOR	GV-13-CMP-1301	B	28'-6"	4'-0"	0'-6"	7,N-P	93"X42"
26	AIR COMPRESSOR	GV-13-CMP-1302	B	"	"	"	7,N-P	93"X42"
27	DESSICANT AIR DRYER	GV-13-DR-1303	B	"	"	"	7,N-P	56"X32"
28	REFRIGERANT AIR DRYER	GV-13-DR-1307	B	"	"	"	7,N-P	
29	COMPRESSED AIR TANK	GV-13-TK-1306	B	"	"	"	7,N-P	
30								
31								
32	NITROGEN TANK	GV-15-TK-1501	B	8	8	0'-6"	3-3.5,N	
33	REVERSE OSMOSIS SYSTEM	GV-17-RO-1703	N/A	–	–	–	6.1,N	
34	REVERSE OSMOSIS STORAGE TANK	GV-17-TK-1707	B				6.1,N	46" DIAMETER
35								
36								
37	PCW HEAT EXCHANGER	GV-19-HX-1913	N/A	–	–	–		
38	PCW COLLECTION TANK	GV-19-TK-1901	B	6'-0"	6'-0"	1'-0"	6,P	
39								
40	EXHAUST UNIT	GV-22-EFU-2263	C	22'-0"	18'-0"	1'-0"	K2&M, 4.1&5.2	SAME AS 40
41	EXHAUST UNIT	GV-22-EFU-2264	C	"	"	"		
42	GAS ANALYZER	–	N/A	–	–	–		
	STABILIZATION (MWNT) BUILDING							
1	EXHAUST UNIT	SB-02-EU-0251	C	22'-10	23'-7"	1'-0"	4,G	(FOOTING FOR 1, 2, 3, 4)
2	EXHAUST UNIT FAN	SB-02-EU-0251	N/A	"	"	"	3.5,G	90"X76" (FOOTING SAME AS 1)
3	EXHAUST UNIT	SB-02-EU-0252	C	"	"	"	4,G	(FOOTING SAME AS 1)
4	EXHAUST UNIT FAN	SB-02-EU-0252	N/A	"	"	"	3.5,G	90"X76" (FOOTING SAME AS 1)
5	DUST COLLECTOR	SB-09-DC-0919	N/A	"	"	"	3,F	44"X36"
6	DUST COLLECTOR	SB-09-DC-0920	N/A	"	"	"	3,F	44"X36"
7	CARBON BED FILTER	GV-09-BH-0924	A	46'-0"	8'-0"	1'-0"	5,F-H	84" DIAMETER (PLATFORM, L SHAPE FOOTING)
8	CARBON BED FILTER	GV-09-BH-0924	A	"	"	"	5,F-H	84" DIAMETER (SAME AS 7, SEE PLAN)
9	CARBON BED FILTER	SB-09-FLT-0922	A	"	"	"	5,F-H	84" DIAMETER (SAME AS 7, SEE PLAN)
10	CARBON BED FILTER	SB-09-FLT-0922	A	"	"	"	5,F-H	84" DIAMETER (SAME AS 7, SEE PLAN)

2

2

2

2

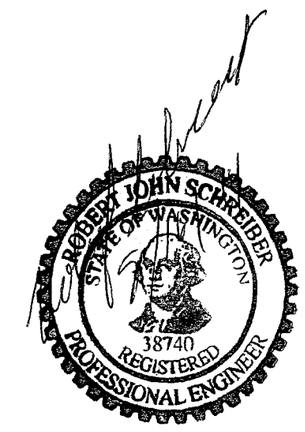

REV	DATE	BY	QA	DATE	DESCRIPTION
2	7/10/14	SDN			PERMIT MODIFICATION REQUEST 135
1A	2/22/99	LC			RELEASED FOR BID
0	2/14/98	LC			RELEASED FOR CONSTRUCTION

REVISION

PermaFix® environmental services
A Nuclear Services and Waste Management Company

DATE
DRAWN
CHECKED
DFTG APVD
ENGR
APVD
OTHER
QA
APPVD FOR IMPLEMENTATION BY
FOR DATE

MIXED WASTE FACILITY
BUILDING 13

MIXED WASTE FACILITY (STB & WSB)
STRUCTURAL
EQUIPMENT FOUNDATION SCHEDULE

SCALE: NONE
SHEET NO. S406
DWG. NO. 31001-S-004
REV 2

Copy
Review & Recycle

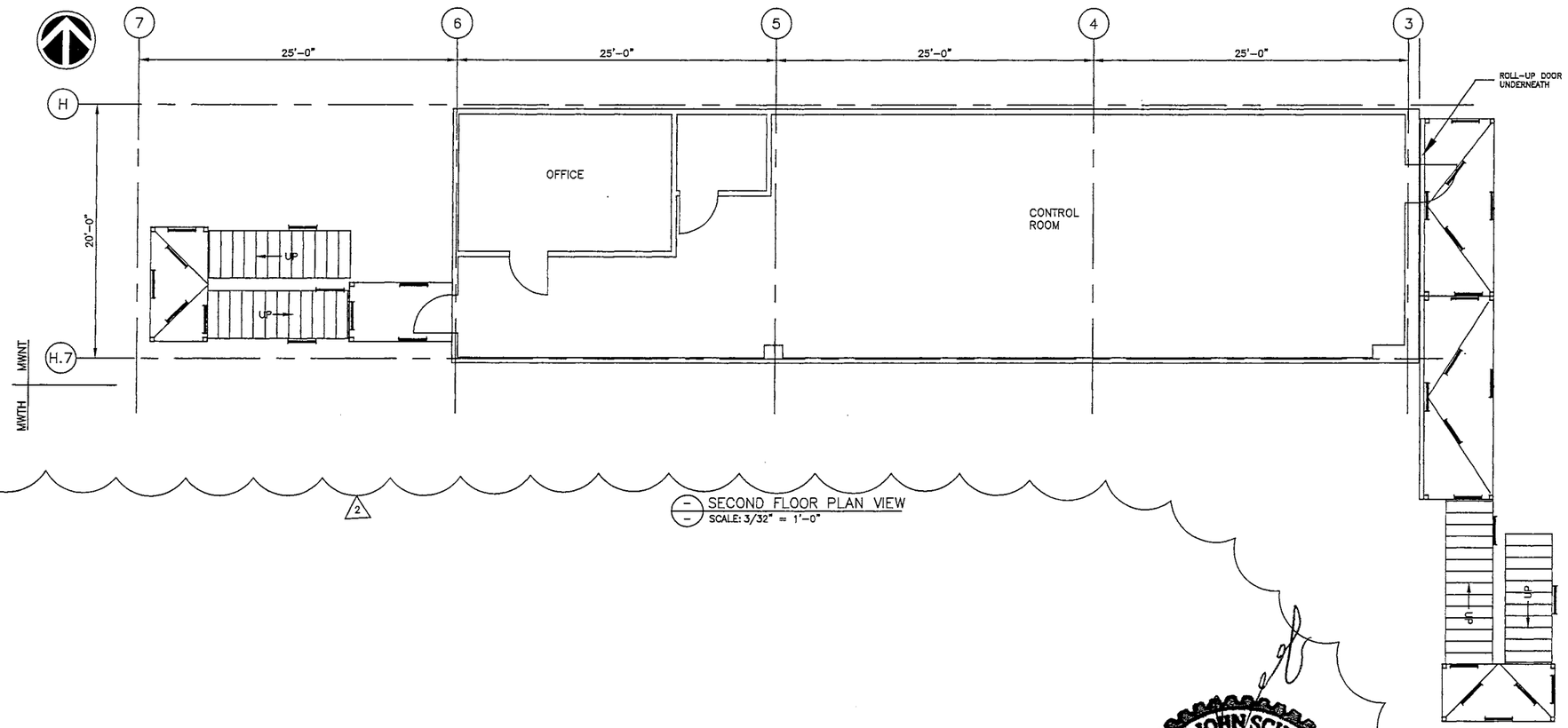

2

SECOND FLOOR PLAN VIEW
SCALE: 3/32" = 1'-0"

ROBERT JOHN SCHREIBER
STATE OF WASHINGTON
21140
REGISTERED
PROFESSIONAL ENGINEER

PermaFix®
environmental services
A Nuclear Services and Waste Management Company

DATE	
DRAWN	
CHECKED	
DFTG APVD	
ENGR	
APVD	
OTHER	
QA	
APPVD FOR IMPLEMENTATION BY	
FOR DATE	

MIXED WASTE FACILITY
STABILIZATION (MWNT)
& (MWTH) BUILDING

STRUCTURAL
CONTROL ROOM
PLAN VIEW

SCALE: AS SHOWN | SHEET NO. S601
DWG. NO. 31001-S-006 | REV 2

REV	DATE	BY	QA	DATE	DESCRIPTION
2	7/11/14	SDN			PERMIT MODIFICATION REQUEST 135
1A					
0	2/14/98	LC			RELEASE FOR CONSTRUCTION

REVISION

Xref H:\Current Drawings\31001 MW\XREFS\border.dwg

Copy
Review & Recycle

THIS DRAWING AND ITS CONTENTS HAVE
BEEN REMOVED FROM THE PERMIT

REV	DATE	BY	QA	DATE	DESCRIPTION
1	7/24/14	SDN			PERMIT RENEWAL APPLICATION 135
0	2/14/98				RELEASE FOR CONSTRUCTION

REVISION

PermaFix®
environmental services
A Nuclear Services and Waste Management Company

DATE	
DRAWN	
CHECKED	
DFTG APVD	
ENGR	
APVD	
OTHER	
QA	
APPVD FOR IMPLEMENTATION BY	
FOR	DATE

MIXED WASTE FACILITY
BUILDING 13

STRUCTURAL FRAMING DETAILS
FRAMING DETAILS

SCALE: AS SHOWN | SHEET NO. S603

DWG. NO. 31001-S-006 | REV 1

Copy
Review & Recycle

DRAWING AND ITS CONTENTS HAVE
BEEN REMOVED FROM THE PERMIT.

REV	DATE	BY	QA	DATE	DESCRIPTION
1	7/24/14				PERMIT MODIFICATION REQUEST 135
0	2/14/98				RELEASE FOR CONSTRUCTION

REVISION

PermaFix®
environmental services
A Nuclear Services and Waste Management Company

DATE	
DRAWN	
CHECKED	
DFTG APVD	
ENGR	
APVD	
OTHER	
QA	
APPVD FOR IMPLEMENTATION BY	
FOR	DATE

MIXED WASTE FACILITY
BUILDING 13

STRUCTURAL
FRAMING DETAILS

SCALE: NONE | SHEET NO. S604

DWG. NO. 31001-S-006 | REV

Copy
Review & Recycle

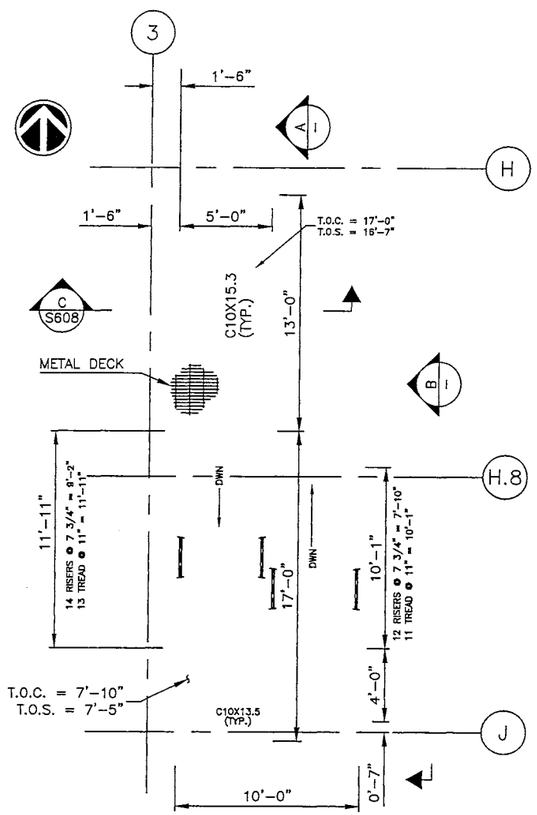

PLAN VIEW
S607 SCALE: 3/16" = 1'-0"

THIS DRAWING IS FOR REFERENCE ONLY.
CONTRACTOR TO PROVIDE STEEL CONSTRUCTION, FABRICATION, CALCULATION DETAILS & VENDOR SHOP DRAWINGS.

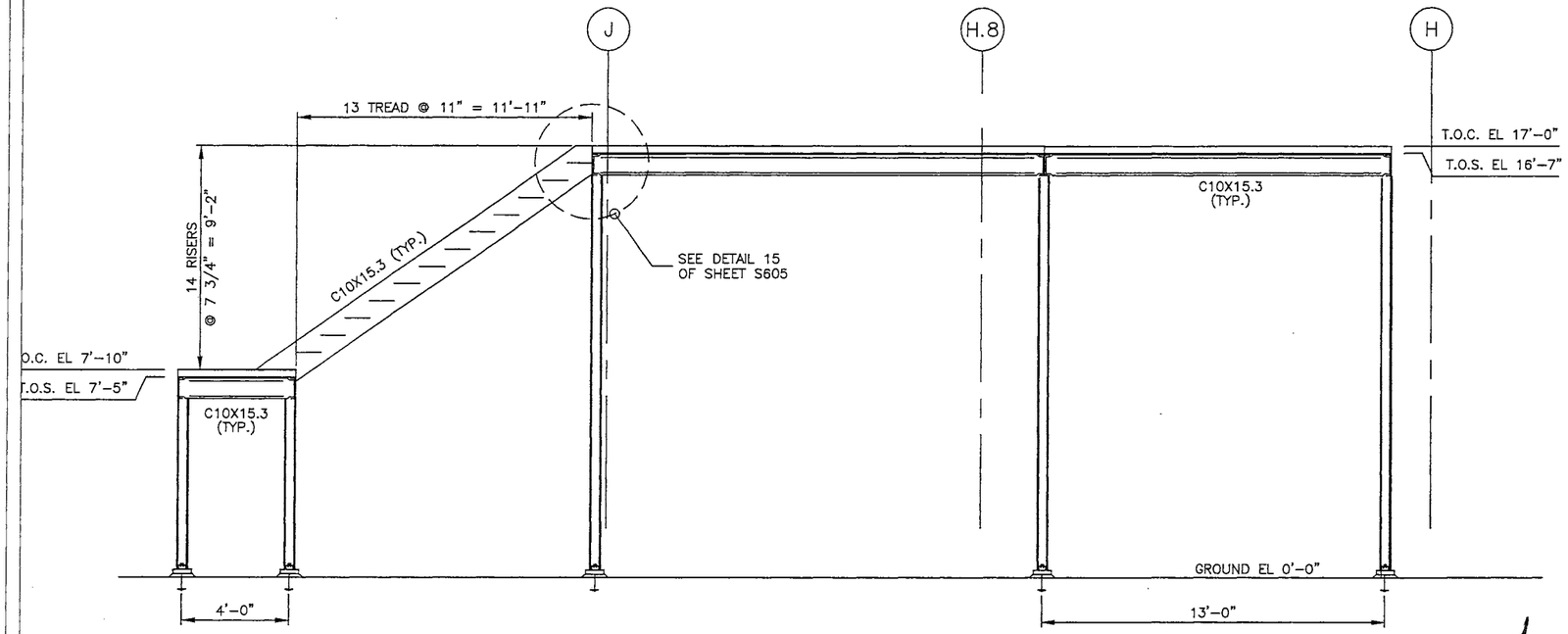

A SECTION
S607 SCALE: 3/16" = 1'-0"

HANDRAIL NOT SHOWN FOR CLARITY

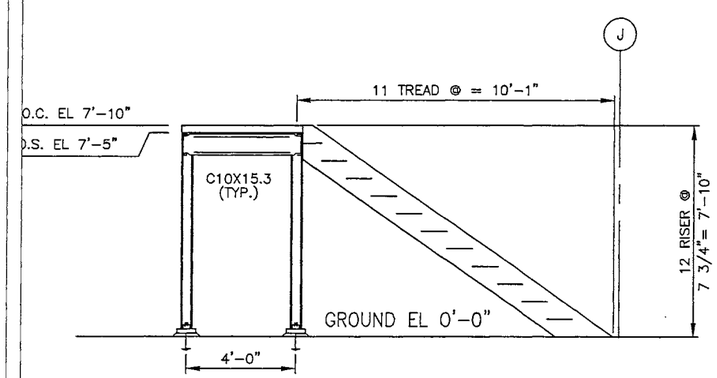

B SECTION
S607 SCALE: 3/16" = 1'-0"

HANDRAIL NOT SHOWN FOR CLARITY

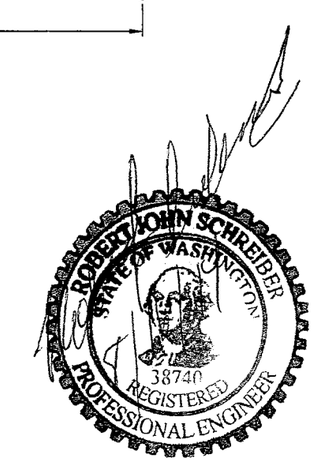

PermaFix®
environmental services
A Nuclear Services and Waste Management Company

REV	DATE	BY	QA	DATE	DESCRIPTION
2	8/13/14	SDN			PERMIT MODIFICATION REQUEST 135
1A	2-22-99	LC			RELEASED FOR BID
0	2-14-98	LC			RELEASED FOR CONSTRUCTION

REVISION

DATE	
DRAWN	
CHECKED	
DFTG APVD	
ENGR	
APVD	
OTHER	
QA	
APPVD FOR IMPLEMENTATION BY FOR DATE	

MIXED WASTE FACILITY
CONTROL ROOM

STRUCTURAL
STAIR DETAIL

SCALE: AS SHOWN | SHEET NO. S607
DWG. NO. 31001-S-006 | REV 2

Copy
Review & Recycle

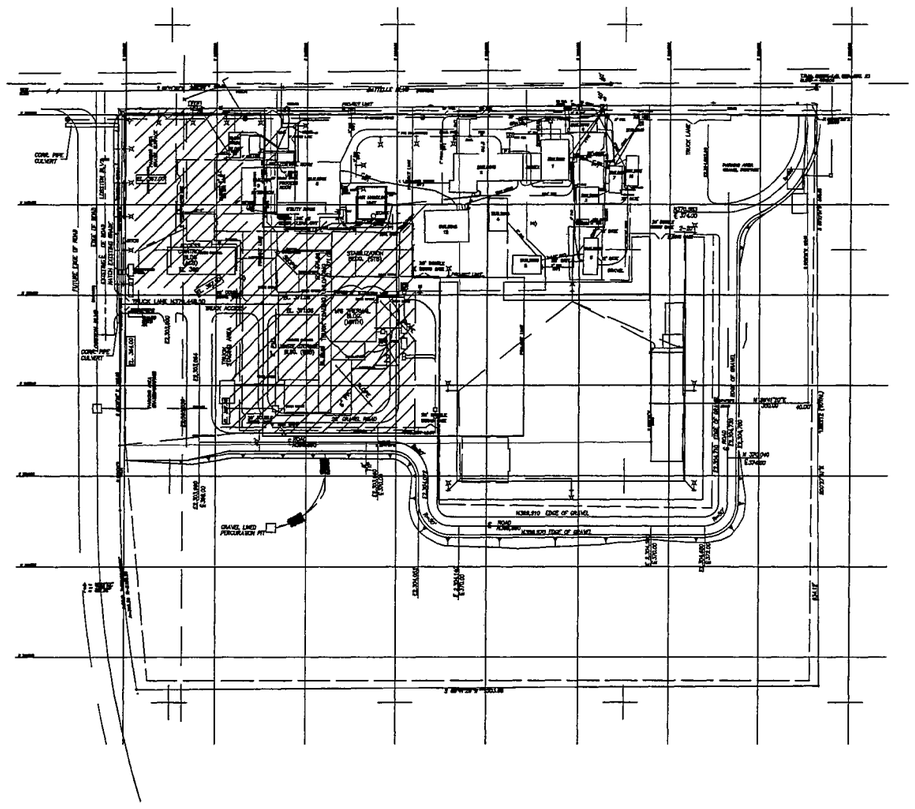

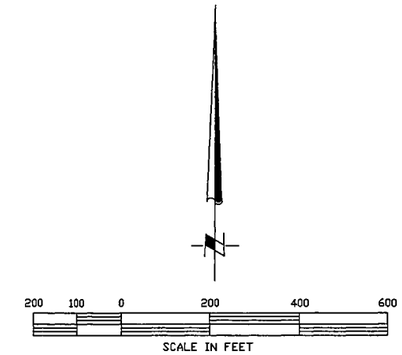

LEGEND

- SEWER MANHOLE
- POWER POLE
- LIGHT POLE
- ELECTRICAL VAULT
- J–BOX
- ELECTRIC BOX
- WATER METER
- FIRE HYDRANT
- WATER VALVE
- PROPERTY LINE
- –X–X– PROPOSED FENCE
- . . . . 1000 FT PERIMETER LINE

NOTES

1. TOPOGRAPHIC SURVEY PROVIDED BY ROGERS SURVEYING, INC., RICHLAND, WA. REFERENCE FILENAME: 10595.DWG, DATED 5–10–95.
2. WATERLINE LOCATION PER AS–BUILT DRAWING DATED 5–2–94.
3. VERTICAL DATUM = NORTH 1/4 CORNER SECTION 22 PER CITY OF RICHLAND.
4. HORIZONTAL DATUM = CITY OF RICHLAND.
5. THIS PROPERTY IS OUTSIDE A 100 AND 500 YEAR FLOOD ZONE PER FLOOD INSURANCE RATE MAP PANEL #535533–0005–E (ZONE C), MARCH 1, 1984. DONE BY THE FEDERAL EMERGENCY MANAGEMENT AGENCY.

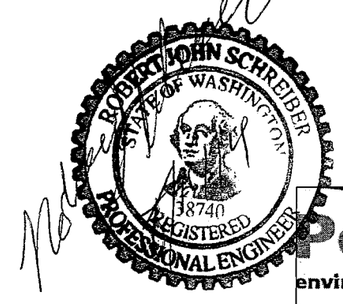

PermaFix®
environmental services
A Nuclear Services and Waste Management Company

REV	DATE	BY	QA	DATE	DESCRIPTION
2	7/24/14	SDN			PERMIT MODIFICATION REQUEST 135
1A	2–26–99				RELEASED FOR PROCUREMENT
0	2–14–98				RELEASED FOR CONSTRUCTION

REVISION

DATE	
DRAWN	
CHECKED	
DFTG APVD	
ENGR	
APVD	
OTHER	
QA	
APP'VD FOR IMPLEMENTATION BY: FOR DATE	

MIXED WASTE FACILITY

CIVIL
TOPOGRAPHY (SITE AREA)

SCALE: AS SHOWN | SHEET NO. C101

DWG. NO. 31001–C–002 | REV 2

Copy
Review & Recycle

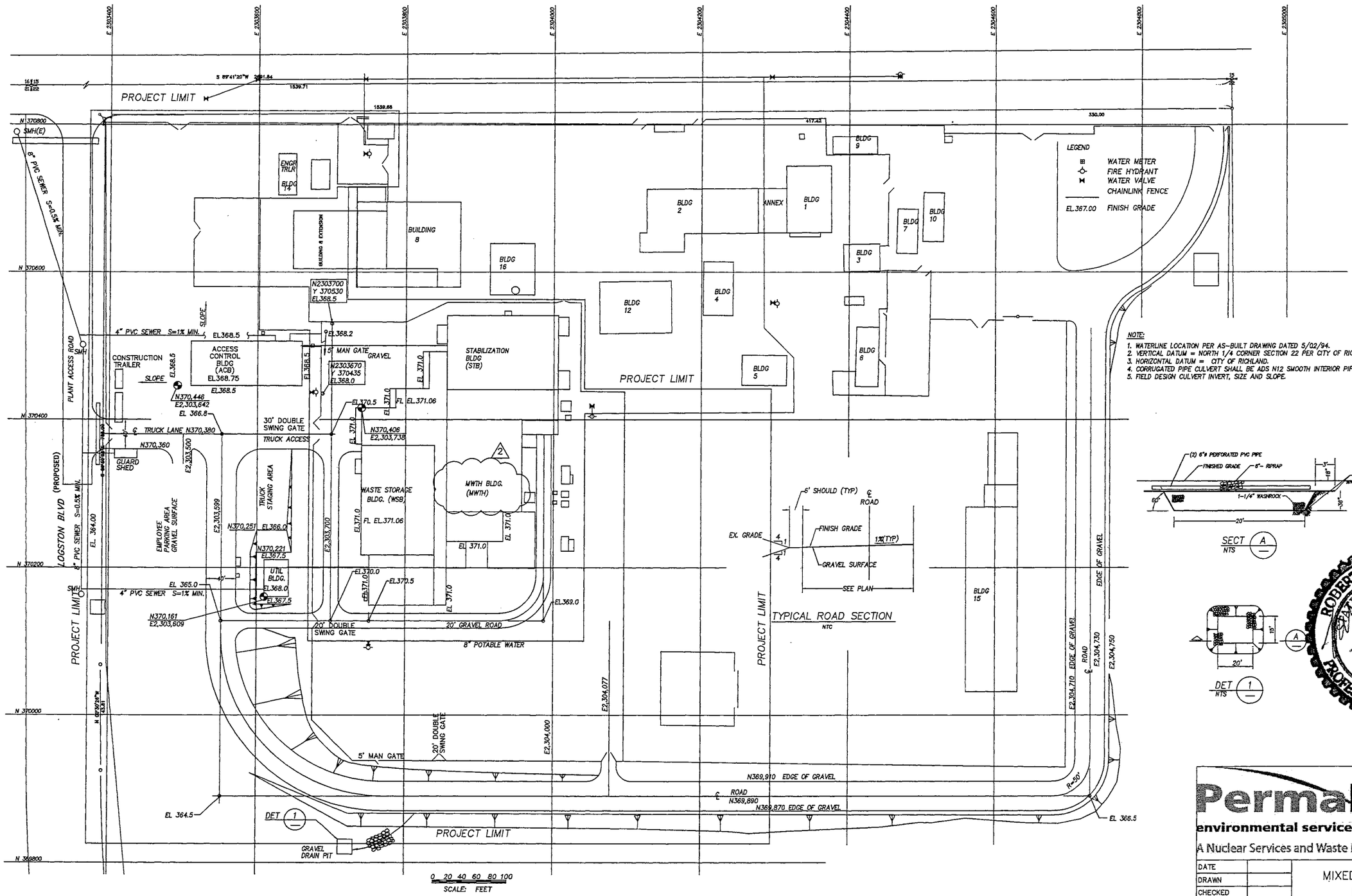

NOTE:
1. WATERLINE LOCATION PER AS-BUILT DRAWING DATED 5/02/94.
2. VERTICAL DATUM = NORTH 1/4 CORNER SECTION 22 PER CITY OF RICHLAND.
3. HORIZONTAL DATUM = CITY OF RICHLAND.
4. CORRUGATED PIPE CULVERT SHALL BE ADS N12 SMOOTH INTERIOR PIPE, OR EQUAL.
5. FIELD DESIGN CULVERT INVERT, SIZE AND SLOPE.

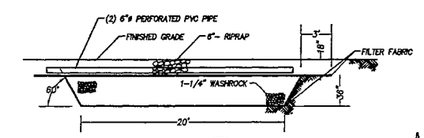

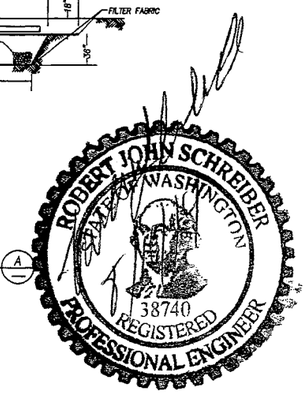

PermaFix®
environmental services
A Nuclear Services and Waste Management Company

REV	DATE	BY	QA	DATE	DESCRIPTION
2	7/23/14	SDN			PERMIT MODIFICATION REQUEST 135
1	08/28/00				AS-BUILT
0	2-14-98				RELEASE FOR CONSTRUCTION

REVISION

DATE	
DRAWN	
CHECKED	
DFTG APVD	
ENGR	
APVD	
OTHER	
QA	
APPVD FOR IMPLEMENTATION BY	
FOR DATE	

MIXED WASTE FACILITY
BUILDING 13

CIVIL
GRADING AND DRAINAGE
PLAN

SCALE: AS SHOWN | SHEET NO. C301

DWG. NO. 31001-C-004 | REV 2

Copy
Review & Recycle

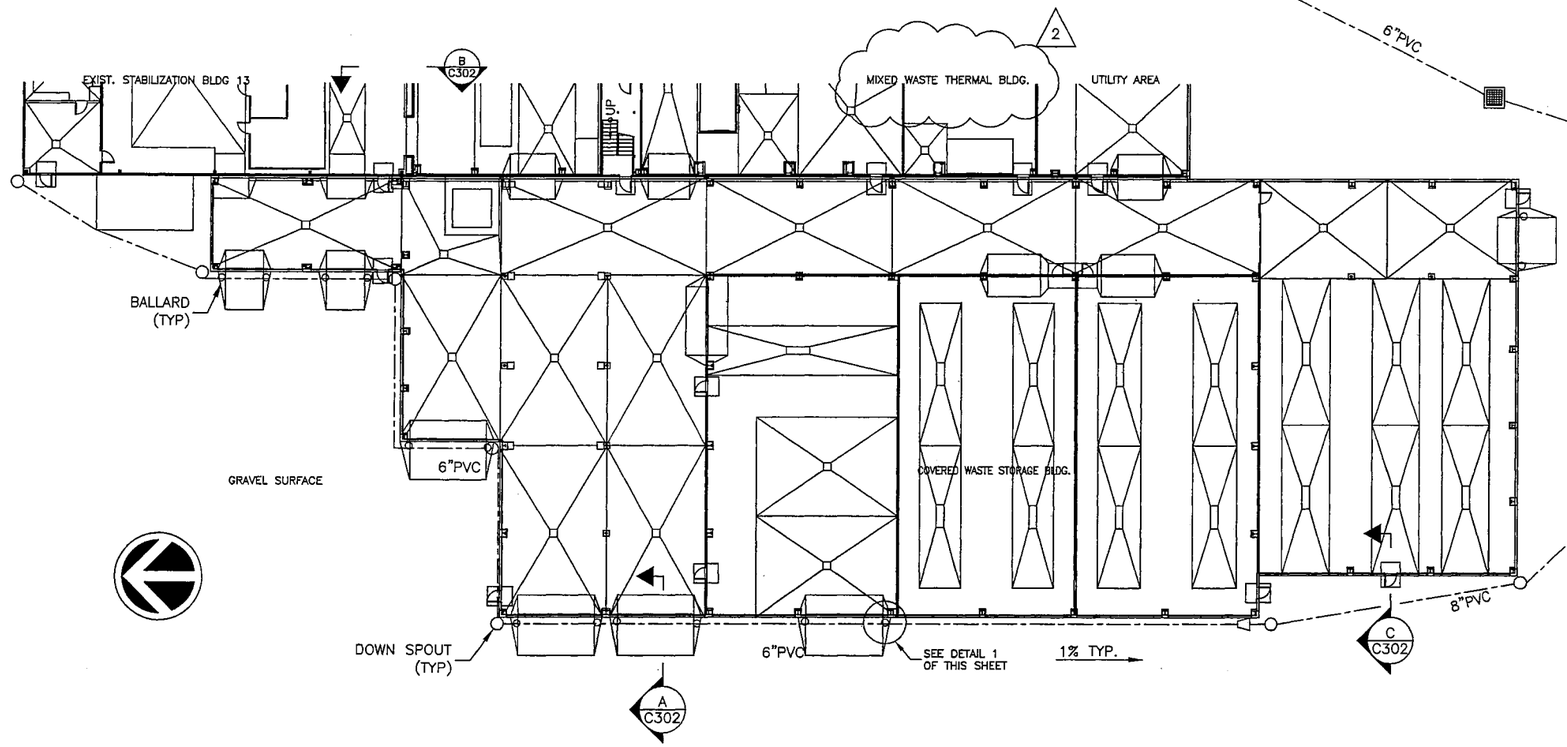

3 C302 DRAINAGE PLAN
SCALE: 1"=40'-0"

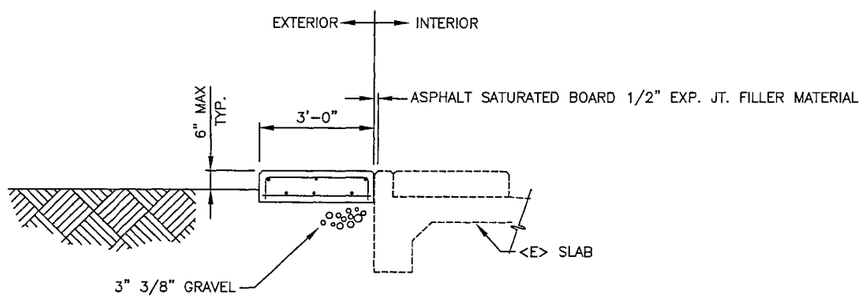

C C302 SECTION AT DOOR
SCALE: 1/4" = 1'-0"

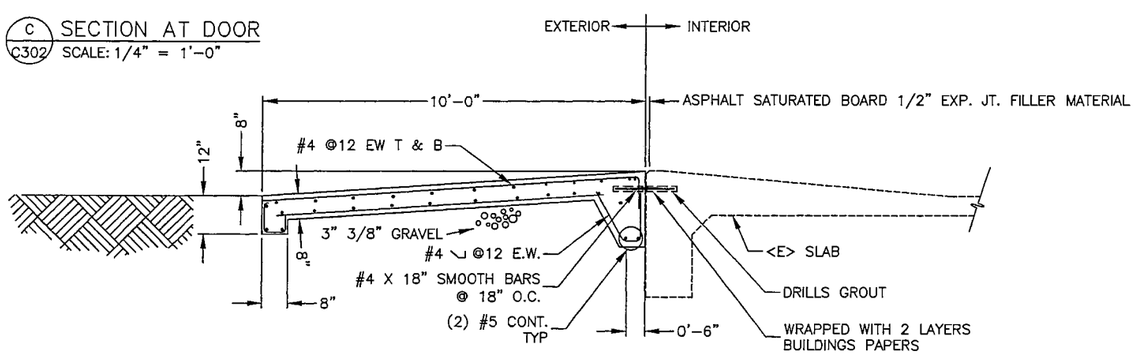

A C302 TYP SECTION IN FRONT OF ROLL-UP DOOR
SCALE: 1/4" = 1'-0"

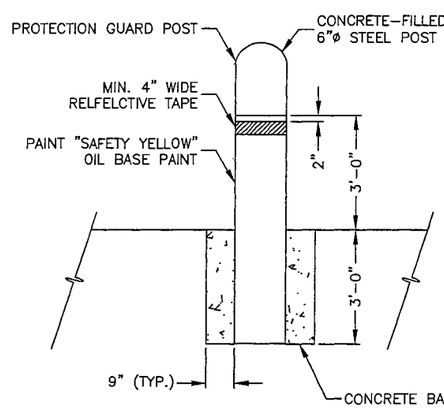

1 C302 DETAIL
SCALE: NONE

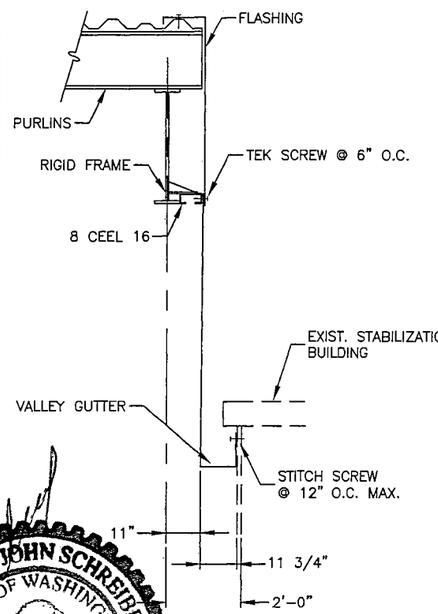

B C302 SECTION
SCALE: 1/4" = 1'-0"

ROBERT JOHN SCHREIBER
STATE OF WASHINGTON
38740
REGISTERED
PROFESSIONAL ENGINEER

PermaFix®
environmental services
A Nuclear Services and Waste Management Company

REV	DATE	BY	QA	DATE	DESCRIPTION
2	7/09/14	SDN			PERMIT MODIFICATION REQUEST 135
1	11-16-99	JAY			REVISED PER 31001-DCA-007
0	2-14-98	LC			RELEASED FOR CONSTRUCTION

REVISION

DATE	
DRAWN	
CHECKED	
DFTG APVD	
ENGR	
APVD	
OTHER	
QA	
APPVD FOR IMPLEMENTATION BY	
FOR	DATE

MIXED WASTE FACILITY
BUILDING 13

DRAINAGE DETAILS

SCALE: AS SHOWN | SHEET NO. C302
DWG. NO. 31001-C-004 | REV 2

Xref H:\Current Drawings\31001 MW\XREFS\border.dwg

Copy
Review & Recycle

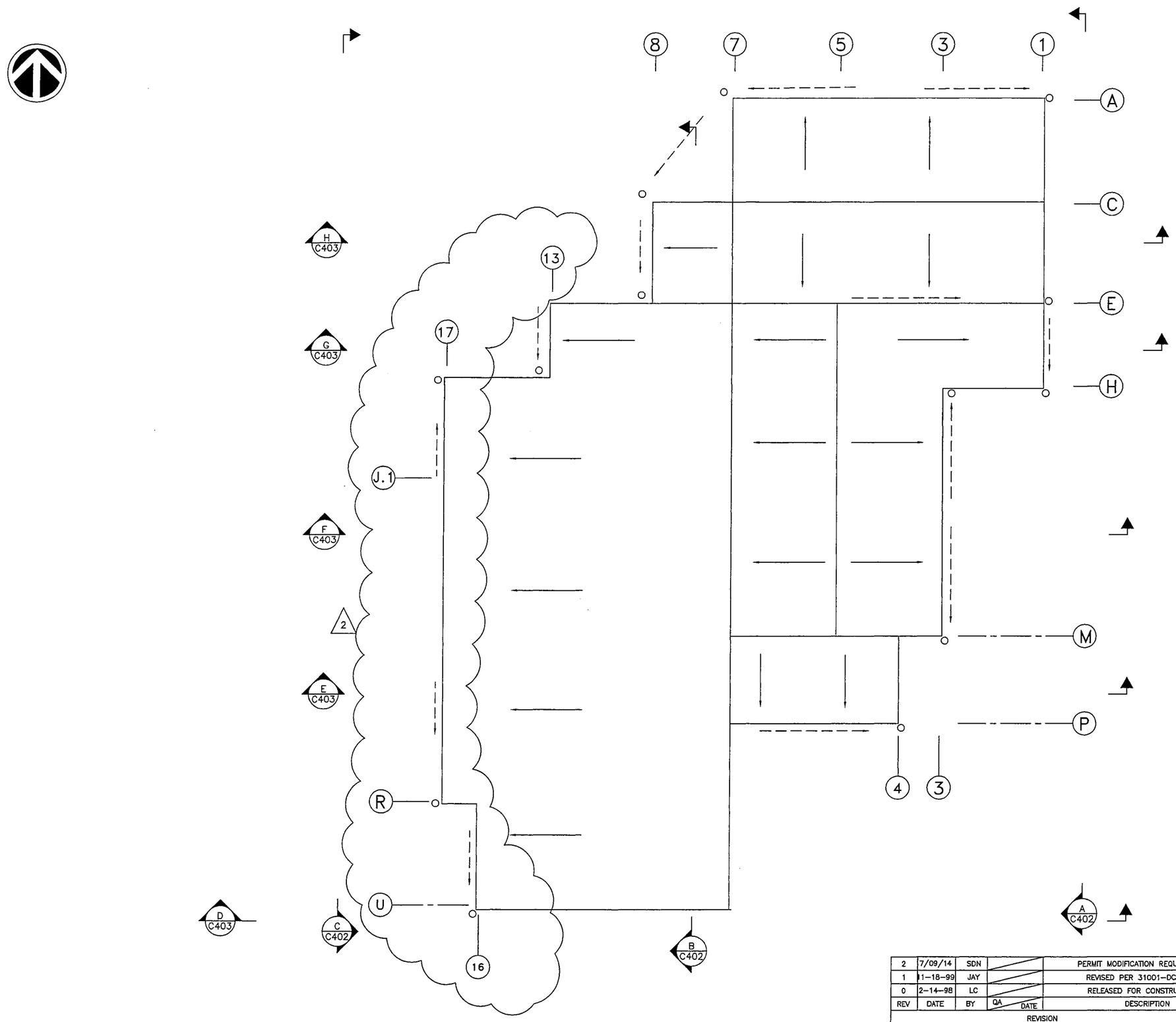

LEGEND:

REPRESENT EAVE HEIGHT (#)
DOWNSPOUTS
DIRECTION OF FLOW ON ROOF
GUTTERS
DIRECTION OF FLOW ON GUTTERS

ROBERT JOHN SCHREIBER
STATE OF WASHINGTON
38740
REGISTERED
PROFESSIONAL ENGINEER

PermaFix®
environmental services
A Nuclear Services and Waste Management Company

REV	DATE	BY	QA	DATE	DESCRIPTION
2	7/09/14	SDN			PERMIT MODIFICATION REQUEST 135
1	11-18-99	JAY			REVISED PER 31001-DCA-007
0	2-14-98	LC			RELEASED FOR CONSTRUCTION

REVISION

DATE	
DRAWN	
CHECKED	
DFTG APVD	
ENGR	
APVD	
OTHER	
QA	
APPVD FOR IMPLEMENTATION BY FOR DATE	

MIXED WASTE FACILITY
BUILDING 13

CIVIL
ROOF DRAINAGE
BUILDING 13

SCALE: AS SHOWN
SHEET NO. C401
DWG. NO. 31001-C-005
REV 2

Copy
Review & Recycle

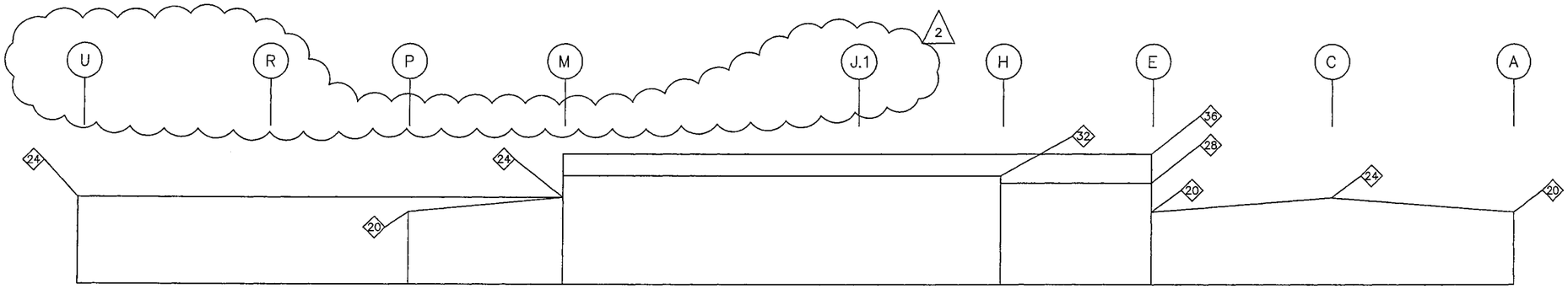

A SECTION
C401 SCALE: NONE

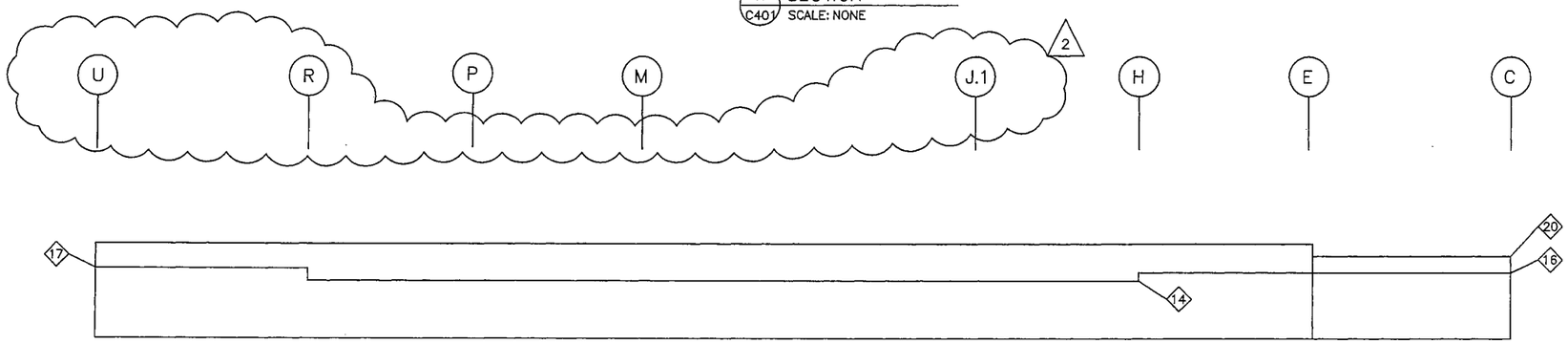

B SECTION
C401 SCALE: NONE

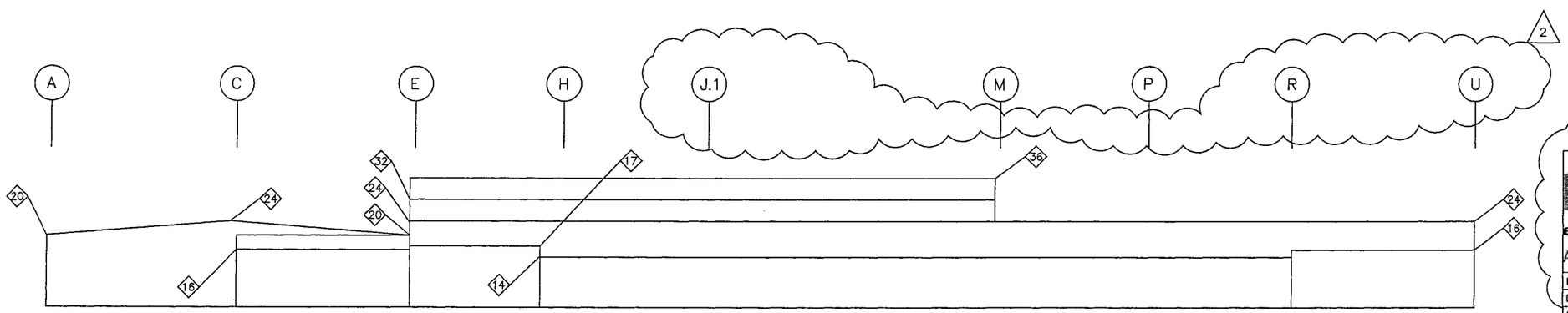

C SECTION
C401 SCALE: NONE

LEGEND:

REPRESENT EAVE HEIGHT
DOWNSPOUTS
DIRECTION OF FLOW ON ROOF
GUTTERS
DIRECTION OF FLOW ON GUTTERS

ROBERT JOHN SCHREIBER
STATE OF WASHINGTON
38740
REGISTERED
PROFESSIONAL ENGINEER

PermaFix®
environmental services
A Nuclear Services and Waste Management Company

REV	DATE	BY	QA	DESCRIPTION
2	7/09/14	SDN		PERMIT MODIFICATION REQUEST 135
1	11-18-99	JAY		REVISED PER 31001-DCA-007
0	2-14-98	LC		RELEASED FOR CONSTRUCTION

REVISION

DATE	
DRAWN	
CHECKED	
DFTG. APVD	
ENGR	
APVD	
OTHER	
QA	
APPVD FOR IMPLEMENTATION BY	
FOR	DATE

MIXED WASTE FACILITY
BUILDING 13

CIVIL
ROOF DRAINAGE
SECTIONS

SCALE: AS SHOWN
SHEET NO. C402
DWG. NO. 31001-C-005
REV 2

Copy
Review & Recycle

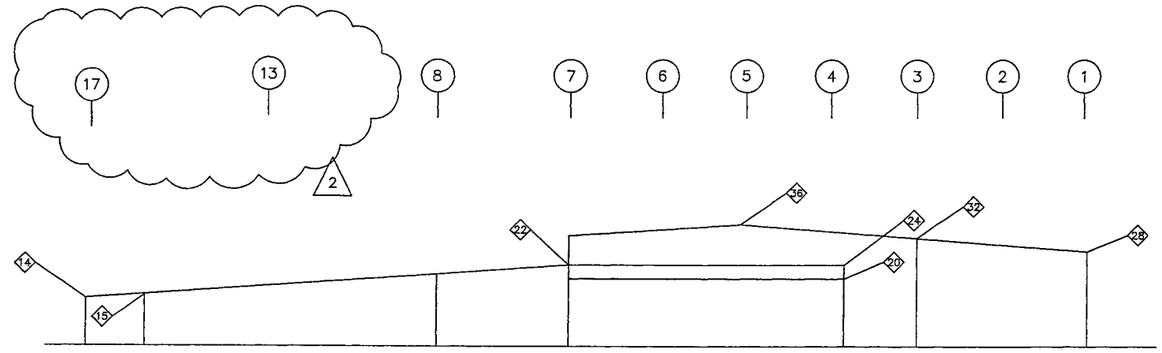

D C401 SECTION
SCALE: 1/32" = 1'-0"

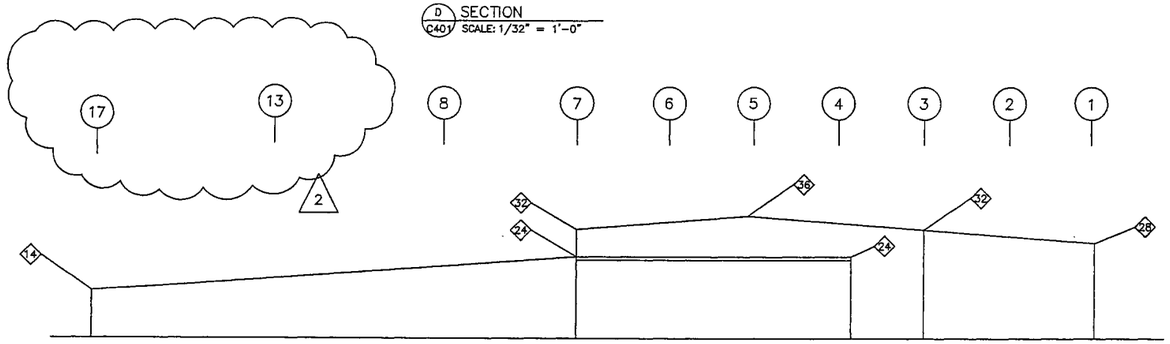

E C401 SECTION
SCALE: 1/32" = 1'-0"

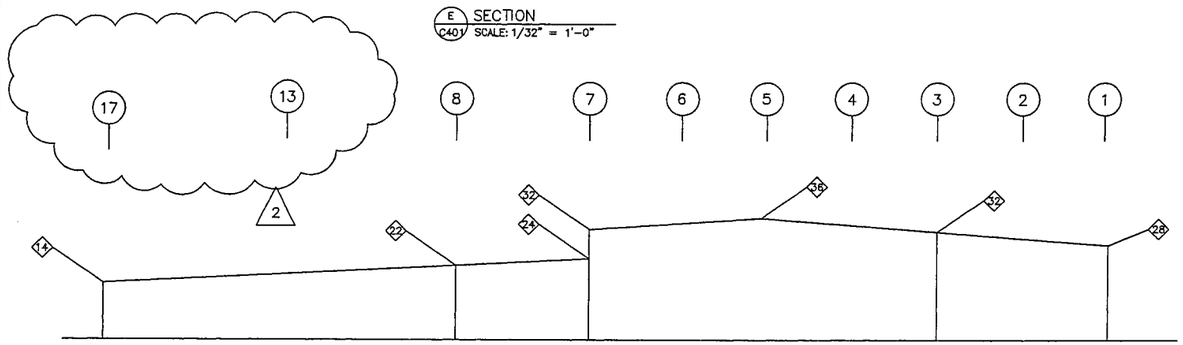

F C401 SECTION
SCALE: 1/32" = 1'-0"

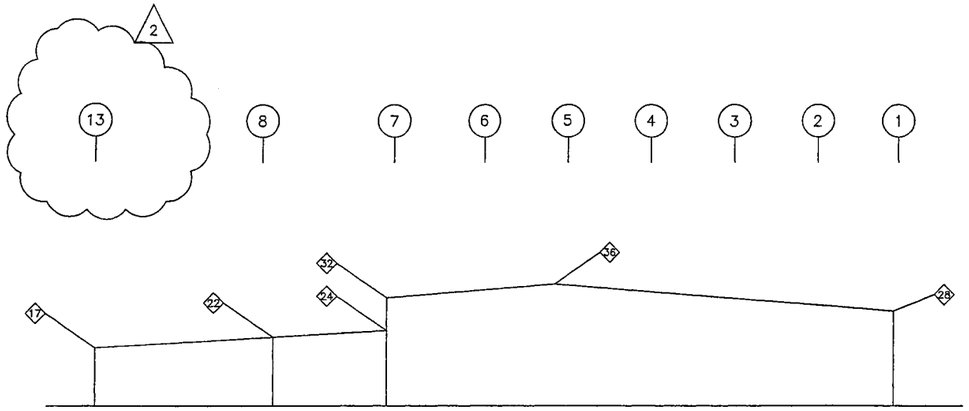

G C403 SECTION
SCALE: 1/32" = 1'-0"

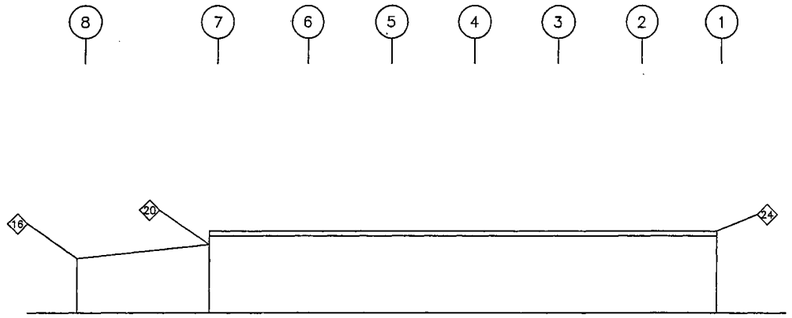

H C403 SECTION
SCALE: 1/32" = 1'-0"

ROBERT JOHN SCHREIBER
STATE OF WASHINGTON
38740
REGISTERED
PROFESSIONAL ENGINEER

LEGEND:

REPRESENT EAVE HEIGHT
DOWNSPOUTS
DIRECTION OF FLOW ON ROOF
GUTTERS
DIRECTION OF FLOW ON GUTTERS

REV	DATE	BY	QA	DATE	DESCRIPTION
2	7/09/14	SDN			PERMIT MODIFICATION REQUEST 135
1	11-18-99	JAY			REVISED PER 31001-DCA-007
0	2-14-98	LC			RELEASED FOR CONSTRUCTION

REVISION

PermaFix®
environmental services
A Nuclear Services and Waste Management Company

DATE	
DRAWN	
CHECKED	
DFTG APVD	
ENGR	
APVD	
OTHER	
QA	
APPVD FOR IMPLEMENTATION BY	
FOR	DATE

MIXED WASTE FACILITY
BUILDING 13

CIVIL
ROOF DRAINAGE
SECTIONS

SCALE: AS SHOWN
SHEET NO. C403
DWG. NO. 31001-C-005
REV 2

Xref H:\Current Drawings\31001 MW\XREFS\bprder.dwg

Copy
Review & Recycle

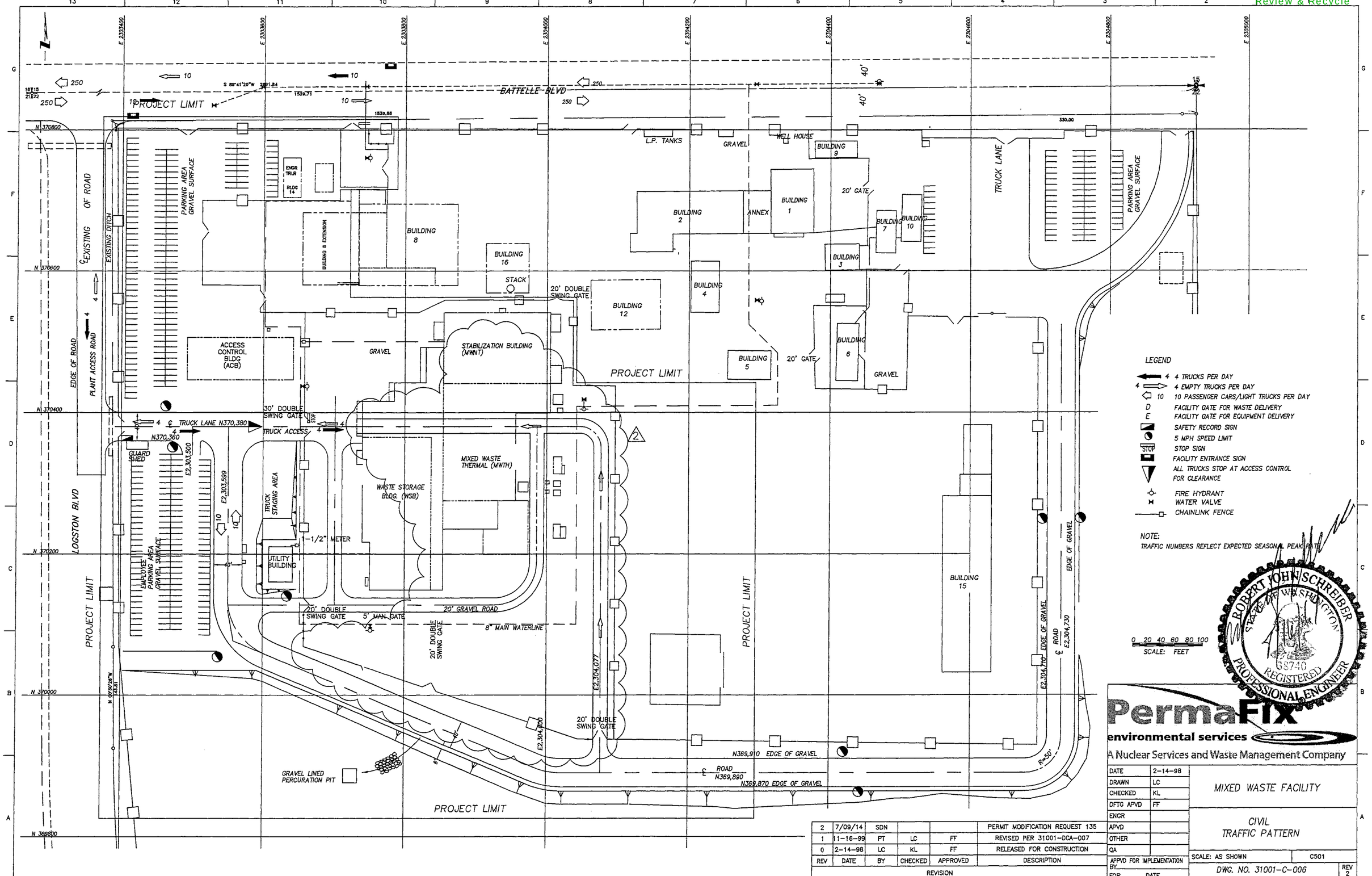

REV	DATE	BY	CHECKED	APPROVED	DESCRIPTION
2	7/09/14	SDN			PERMIT MODIFICATION REQUEST 135
1	11-16-99	PT	LC	FF	REVISED PER 31001-DCA-007
0	2-14-98	LC	KL	FF	RELEASED FOR CONSTRUCTION

REVISION

PermaFix
environmental services
A Nuclear Services and Waste Management Company

DATE	2-14-98
DRAWN	LC
CHECKED	KL
DFTG APVD	FF
ENGR	
APVD	
OTHER	
QA	
APPVD FOR IMPLEMENTATION BY	
FOR DATE	

MIXED WASTE FACILITY

CIVIL
TRAFFIC PATTERN

SCALE: AS SHOWN | C501

DWG. NO. 31001-C-006 | REV 2

Copy
Review & Recycle

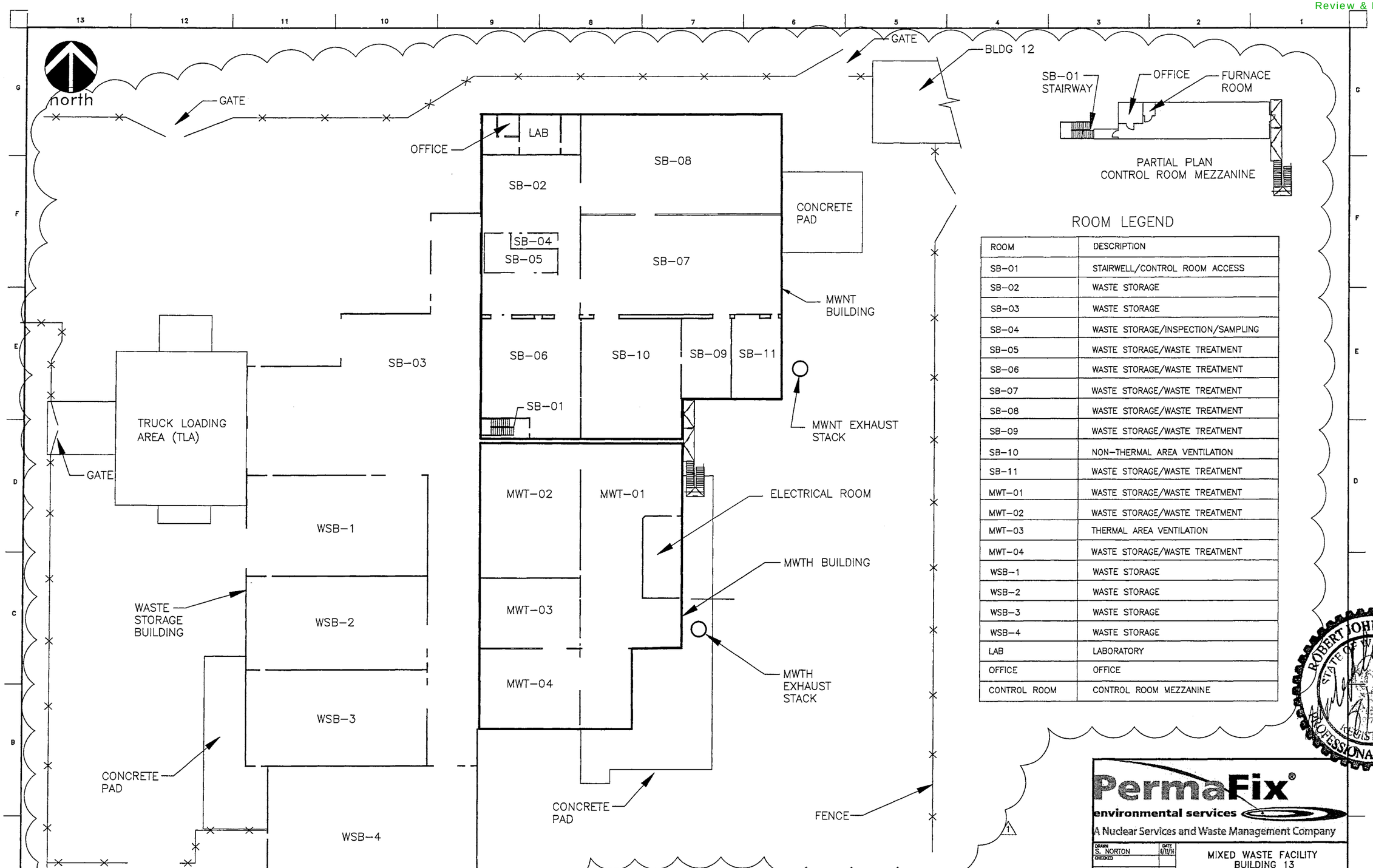

ROOM LEGEND

ROOM	DESCRIPTION
SB-01	STAIRWELL/CONTROL ROOM ACCESS
SB-02	WASTE STORAGE
SB-03	WASTE STORAGE
SB-04	WASTE STORAGE/INSPECTION/SAMPLING
SB-05	WASTE STORAGE/WASTE TREATMENT
SB-06	WASTE STORAGE/WASTE TREATMENT
SB-07	WASTE STORAGE/WASTE TREATMENT
SB-08	WASTE STORAGE/WASTE TREATMENT
SB-09	WASTE STORAGE/WASTE TREATMENT
SB-10	NON-THERMAL AREA VENTILATION
SB-11	WASTE STORAGE/WASTE TREATMENT
MWT-01	WASTE STORAGE/WASTE TREATMENT
MWT-02	WASTE STORAGE/WASTE TREATMENT
MWT-03	THERMAL AREA VENTILATION
MWT-04	WASTE STORAGE/WASTE TREATMENT
WSB-1	WASTE STORAGE
WSB-2	WASTE STORAGE
WSB-3	WASTE STORAGE
WSB-4	WASTE STORAGE
LAB	LABORATORY
OFFICE	OFFICE
CONTROL ROOM	CONTROL ROOM MEZZANINE

ROBERT JOHN SCHREIBER
STATE OF WASHINGTON
REGISTERED
PROFESSIONAL ENGINEER

PermaFix®
environmental services
A Nuclear Services and Waste Management Company

DRAWN S. NORTON	DATE 6/12/14
CHECKED	
DFTG APVD	
ENGR	
APVD	
OTHER	
QA	
APPROVED FOR IMPLEMENTATION BY / FOR / DATE	

MIXED WASTE FACILITY
BUILDING 13

MIXED WASTE FACILITY
ROOM GENERAL ARRANGEMENT

SCALE: NONE
SHEET NO 1 / SHEETS 1
DWG NO 31001-M-100
REV 1

PERMIT FIGURE NUMBER: NONE

RR	MF	QA BY / DATE	ENGR BY / DATE	CHK BY / DATE	SDN 6/14 REV BY / DATE	DESCRIPTION	REV NO
						PERMIT MODIFICATION REQUEST 135	1

REVISIONS

CADCODE 2004 CADFILE 31001-M-100-R1

DRAWING NO	DRAWING TITLE
REFERENCE DRAWINGS	
NEXT HIGHER ASSEMBLY:	

Copy
Review & Recycle

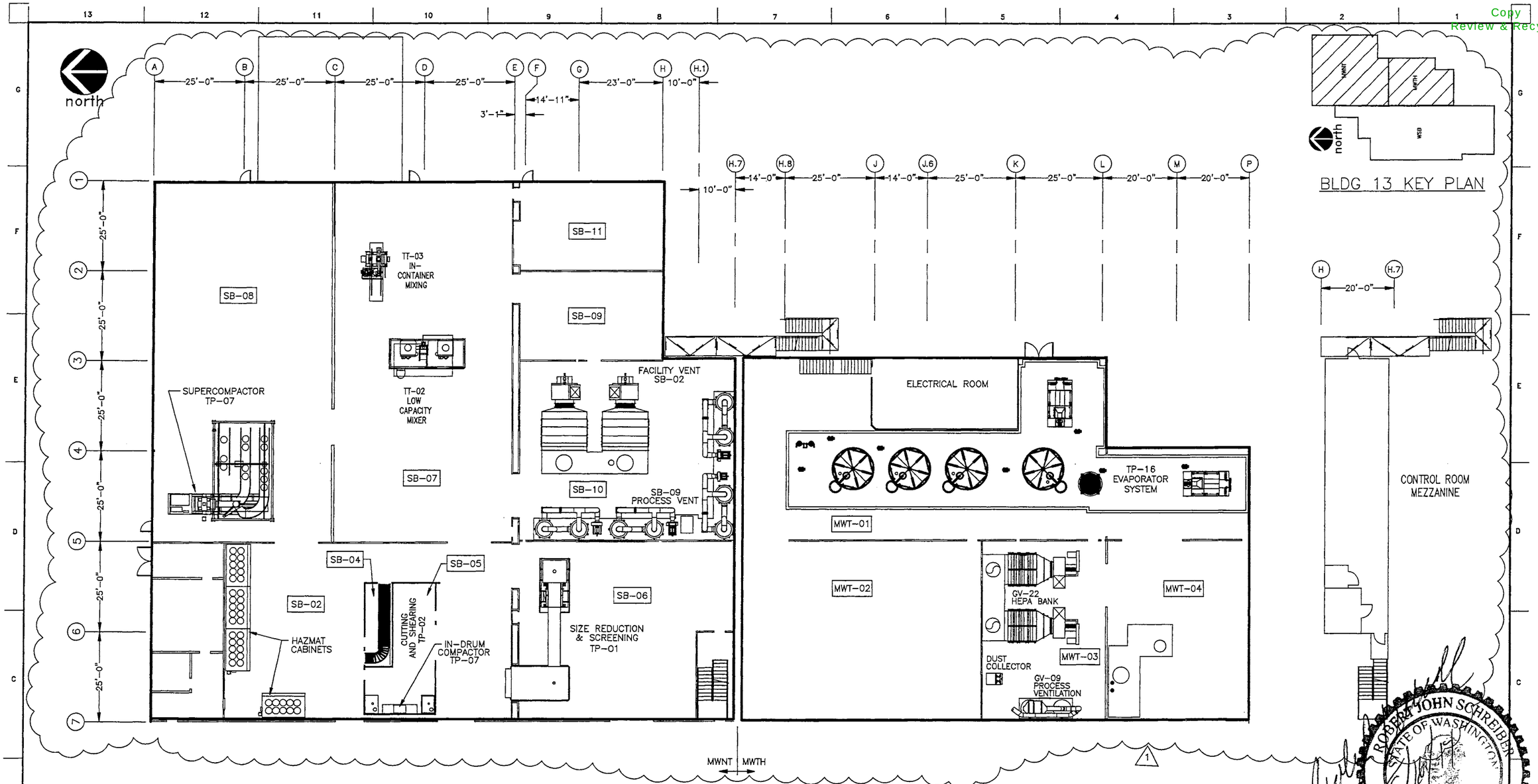

MIXED WASTE NON-THERMAL (MWNT) AND MIXED WASTE THERMAL (MWTH)
EQUIPMENT LAYOUT

ROBERT JOHN SCHREIBER
STATE OF WASHINGTON
REGISTERED
PROFESSIONAL ENGINEER

PermaFix
environmental services
A Nuclear Services and Waste Management Company

						SDN 6/14	PERMIT MODIFICATION REQUEST 135	1
RR	MF	QA BY / DATE	ENGR BY / DATE	CHK BY / DATE	REV BY / DATE		DESCRIPTION	REV NO

REVISIONS

DRAWN	S. NORTON
DATE	6/12/14
CHECKED	
DFTD APVD	
ENGR	
APVD	
OTHER	
QA	
APPROVED FOR IMPLEMENTATION	
BY / FOR / DATE	

MIXED WASTE FACILITY
BUILDING 13

MWNT & MWTH
EQUIPMENT GENERAL
ARRANGEMENT

SCALE	NONE
SHEET NO	2
SHEETS	
DWG NO	31001-M-100
REV	1

DRAWING NO | DRAWING TITLE
REFERENCE DRAWINGS
NEXT HIGHER ASSEMBLY:
CADCODE 2004 | CADFILE

PERMIT FIGURE NUMBER: NONE

Copy
Review & Recycle

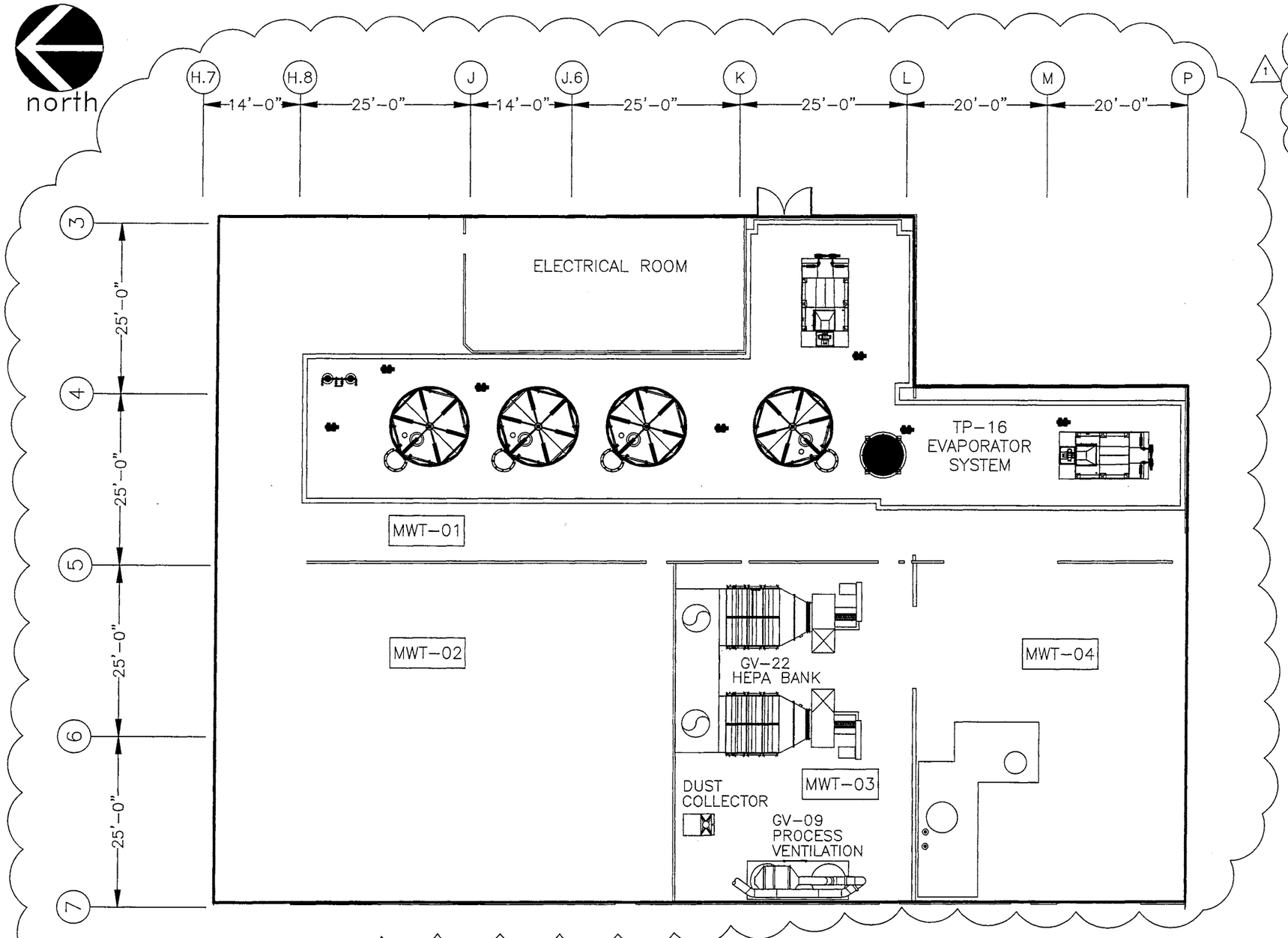

MWTH
EQUIPMENT LAYOUT
SCALE:1/16"=1'-0"

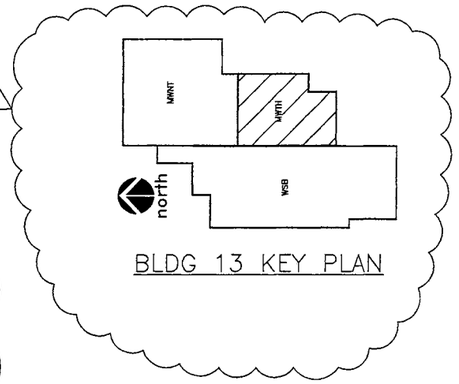

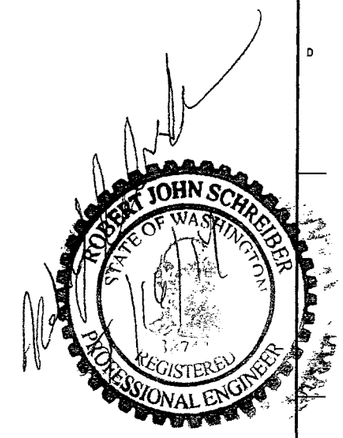

PermaFix®
environmental services
A Nuclear Services and Waste Management Company

RR	MF	QA BY / DATE	ENGR BY / DATE	CHK BY / DATE	REV BY / DATE	SDN 6/14	PERMIT MODIFICATION REQUEST 135	1
							DESCRIPTION	REV NO

REVISIONS

DRAWING NO	DRAWING TITLE
REFERENCE DRAWINGS	
NEXT HIGHER ASSEMBLY:	

CADCODE 2004 CADFILE

DRAWN S. NORTON DATE 6/12/14
CHECKED
DFTG APV'D
ENGR
APV'D
OTHER
QA
APPROVED FOR IMPLEMENTATION
BY
FOR DATE

MIXED WASTE FACILITY
BUILDING 13

MIXED WASTE THERMAL (MWTH)
EQUIPMENT GENERAL
ARRANGEMENT

SCALE AS SHOWN SHEET NO 4 SHEETS
DWG NO 31001-M-100 REV 1

PERMIT FIGURE NUMBER: NONE