2014-LTR-1014

Attachment 5

[Permit Attachment CC]

Waste Analysis Plan

ATTACHMENT CC

Waste Analysis Plan

MIXED WASTE FACILITY
RCRA/TSCA PERMIT

P~~ERMA-~~F~~IX-~~NW-R
RICHLAND, WASHINGTON

Permit Number: WAR 0000 10355

This page left intentionally blank.

TABLE OF CONTENTS

C WASTE ANALYSIS **6**

C-1 CHEMICAL, BIOLOGICAL AND PHYSICAL ANALYSES **6**
C-1a Waste in Piles *6*
C-1b Landfilled Wastes *6*
C-1c Wastes Incinerated and Wastes Used in Performance Tests *6*
C-2 WASTE ANALYSIS PLAN (WAP) **8**
C-2a Detailed Chemical, Physical, and/or Biological Analysis *8*
C-2a(1) Parameters and Rationale 8
C-2a(2) Analytical Methods 9
C-2a(2)(a) Parameters and Methods 9
C-2a(2)(b) Quality Assurance Program 9
C-2b Generator-Supplied Analyses *9*
C-2c Additional Requirements for Wastes Generated Off-site *9*
C-2c(1) Parameters and Rationale to Confirm Identity of Off-site Waste 9
C-2c(2) Analytical Methods to Confirm Identity of Off-site Waste 9
C-2c(3) Representative Sampling of Incoming Off-site Wastes 9
C-2d Methods for Collecting Samples for Detailed and Confirming Analyses *10*
C-2e Frequency of Analyses *10*
C-3 MANIFEST SYSTEM **11**
C-3a Procedures for Receiving Shipments *11*
C-3b Response to Significant Discrepancies *11*
C-3c Provisions for Non-acceptance of Shipment *11*
C-3c(1) Non-acceptance of Undamaged Shipment 11
C-3c(2) Activation of Contingency Plan for Damaged Shipment 12
C-4 TRACKING SYSTEM **13**
C-4a Container Identification *13*
C-4a(1) Locating A Container In Storage Using the Waste Tracking System 13
C-4b Facility Record Keeping *13*
C-4b(1) Land Disposal Restrictions 14

Formatted: Left

Formatted: Indent: Hanging: 0.06"

This page left intentionally blank.

SECTION C - WASTE ANALYSIS

ACRONYM LIST

CHOXD	Chemical Oxidation
CHRED	Chemical Reduction
DEACT	Deactivation
EVP	Evaporator
LDR	Land Disposal Restriction
MACRO	Macro-encapsulation
MWF	Mixed Waste Facility
NEUTR	Neutralization
PCB	Polychlorinated Biphenyl
QAP	Quality Assurance Plan
SP	Sampling Plan
STABL	Stabilization/micro-encapsulation
TSCA	Toxic Substance Control Act
WAP	Waste Analysis Plan

This page left intentionally blank.

C WASTE ANALYSIS

[WAC 173-303-806(4)(a)(ii) and (iii), 300]

C-1 CHEMICAL, BIOLOGICAL AND PHYSICAL ANALYSES

The MWF is a commercial facility and will treat waste received from its customers to meet the applicable land disposal restriction (LDR) treatment standards. Treatment is achieved by one or more of the following processes: stabilization / micro-encapsulation (STABL); neutralization (NEUTR); chemical oxidation (CHOXD); chemical reduction (CHRED); macro-encapsulation (MACRO) (alternative treatment standard for debris); deactivation (DEACT); carbon treatment (CARBN) physical extraction (alternative treatment standard for debris); and ~~gasification/vitrification (equivalent to the specified technology treatment standards CMBST and INCIN)~~evaporation. Description of the different treatment lines is provided in Section 5.0 of the Waste Analysis Plan (Attachment 1).

Wastes to be evaluated for acceptance are those designated under WAC 173-303-081 (discarded chemical products-U and P wastes), WAC 173-303-182 (dangerous waste sources—F and K wastes), WAC 173-303-090 (dangerous waste characteristics—D wastes), or WAC 173-303-100 (dangerous waste criteria-WT and WP wastes). Wastes to be evaluated for acceptance from sources outside the state of Washington will be those wastes designated under federal regulatory provisions (40 CFR Part 261) or the applicable regulatory provisions of the generator's state environmental agency.

Based on the treatment processes described above, the MWF can accept those wastes with the codes identified in Part A Form ~~3~~ of the application. Part A Form ~~3~~ was developed based on the following criteria:

- Acceptable waste~~s~~ codes that have specified technology-based LDR treatment standards identical or equivalent to the facility processes (STABL, NEUTR, CHOXD, CHRED, MACRO, DEACT, CARBN, AMLGM, CMBST and INCIN);
- Acceptable U.S. EPA waste codes that have concentration-based LDR treatment standards with associated constituents amenable to treatment by one or more of the treatment processes available at the MWF; and
- State only dangerous waste amenable to treatment by one or more of the treatment processes available at the MWF.

Formatted: Indent: Left: 0", Bulleted + Level: 1 + Aligned at: 0.25" + Indent at: 0.5"

C-1a Waste in Piles

This section is not applicable; the MWF does not operate a waste pile.

C-1b Landfilled Wastes

This section is not applicable; the MWF does not operate a landfill.

C-1c Wastes Incinerated and Wastes Used in Performance Tests

This section is not applicable; the MWF does not operate an incinerator.~~The decision for thermally treating a waste will be based on the chemical and physical characteristics of the waste and applicable regulatory requirements. For example, wastewater (e.g., < 1% total organic carbon and < 1% suspended solids) carrying a toxicity characteristic for metal will not normally be thermally treated,~~

~~for reason of the dilution prohibition 40 CFR 268.3 and incorporated by reference in WAC 173-303-140(2)(a). Whereas, non-waste water carrying a toxicity characteristic for metal may be thermally treated organics. The deciding factor will be whether thermal treatment is required for management of organics.~~

C-2 WASTE ANALYSIS PLAN (WAP)

Offsite generators are responsible for completely and correctly identifying the dangerous constituents and characteristics of their waste and assigning the appropriate waste codes. If waste identification information provided by the generator is not complete, MWF management can either reject the waste, or assist the generator in the characterization of the waste in accordance with WAC 173-303-070 and established protocols. A waste analysis plan (WAP) has been developed for the MWF. The WAP is included as Attachment 1 and contains several appendices (e.g., SAP, QAPP). The WAP, with its associated appendices, is a stand-alone document.

Waste acceptance criteria and protocols are provided in the WAP, Attachment 1. These protocols include: 1) pre-acceptance procedures used to evaluate the characteristics and profile of waste off-site generators prior to acceptance at the MWF; 2) identification of stabilization treatment formulation; 3) and waste feed restrictions. Waste streams will not be accepted until properly characterized by the generator and/or MWF personnel. In addition to wastes received from offsite generators, waste can be generated onsite by virtue of the operation and maintenance of process equipment, receiving and storage areas generation of treatment residues etc. This waste will be characterized to determine the appropriate on-site treatment.

C-2a Detailed Chemical, Physical, and/or Biological Analysis

Any waste carrying a waste code listed in the Part A Application could be accepted for treatment or storage. Typical waste types may include bulk solids (soil, gravel, granular solids, filter cake, tank heel, container heel, etc.), metallic and non-metallic debris, bulk liquids (organic and inorganic, etc.), bulk metals (sheet metal, pipes, lead, etc.), and heterogeneous solids (personal protective equipment, spill clean up kits, etc.).

Only wastes that can be safely managed at the MWF will be accepted. For example a waste ***must meet the minimum acceptance*** criteria listed below to be considered for acceptance and management at the MWF.

- Wastes carrying waste codes listed in the Part A Application,
- Liquid waste with a flash point greater than 100°F, and
- Liquid waste with a flash point less than 100°F if received in containers with capacities less than or equal to 55 gallons.

And the following are examples of restricted wastes:

- Wastes carrying waste codes *not listed* in the Part A Application.
- Wastes classified as explosive or shock sensitive as defined by WAC 173-303-090(7)(a)(vi)-(viii).
- Wastes classified as dioxin wastes (F020-F023 and F026-F028).

C-2a(1) Parameters and Rationale

Parameters and rational selected to characterize and confirm identity of each waste managed at the MWF are discussed in Section 2.0 of the WAP.

C-2a(2)Analytical Methods

C-2a(2)(a) Parameters and Methods

Sampling and testing methods used to characterize wastes in accordance with Washington State requirements (WAC 173-303-110, Sampling and testing methods) and EPA SW-846 (Test Methods for the Evaluation of Solid Waste, Physical/Chemical Methods). Specific methods for individual parameters are referenced in Table B-1 of the WAP.

The methods required in 40 CFR Part 264 Subparts AA-CC will be used to determine compliance with the air emission standards of those regulations.

C-2a(2)(b) Quality Assurance Program

The QAP (Appendix B to the WAP) describes the quality assurance requirements related to sampling and analytical laboratory work performed in support of the MWF WAP.

C-2b Generator-Supplied Analyses

The WAP details information required from generators for waste acceptance in Section 3, (Pre-Acceptance). When generators do not provide sufficient information to properly manage the waste, MWF management will either not accept the waste for management or collect additional information according to the procedures outlined in Sections 2 and 3 of the WAP.

C-2c Additional Requirements for Wastes Generated Off-site

The WAP details the incoming waste shipment procedure to be used when the MWF accepts waste generated off-site in Section 4 (Waste Receipt). When incoming wastes do not match the identity of the waste specified on the manifest or shipping paper, the waste shipment will be classified as a "non-conformance" shipment. In addition, it will be determined if the discrepancy is a significant discrepancy, "significant" difference in quantity or type shown on the manifest, as defined by WAC 173-303-370(4).

C-2c(1) Parameters and Rationale to Confirm Identity of Off-site Waste

Parameters and rational selected to confirm identify of off-site waste are discussed in Section 2.0 of the WAP.

C-2c(2) Analytical Methods to Confirm Identity of Off-site Waste

Specific methods for individual parameters are referenced in the QAP (Appendix B of the WAP).

C-2c(3) Representative Sampling of Incoming Off-site Wastes

Representative sampling of incoming off-site wastes is detailed in Section A-1 (Sampling Strategy) and Section A-3 (Sampling Procedures) of the SP (Appendix A to the WAP).

C-2d Methods for Collecting Samples for Detailed and Confirming Analyses

The methods and references for collecting detailed and confirming analysis are provided in Section A-3 (Sampling Procedures) of the SP. Representative sampling, maintenance and decontamination of sampling equipment, sample preservation techniques, chain of custody procedures, and sample holding times are detailed in Sections A-1 (Sampling Strategy), A-4 (Sample Preservation, Volumes, and Holding), A-6 (Equipment Decontamination), and A-7 (Sampling Documentation) of the SP.

C-2e Frequency of Analyses

Section 3 in the WAP, Attachment 1, details the frequency at which analyses will be repeated. At a minimum analysis will be repeated, as prescribed by WAC 173-303-300, when one of the following occurs:

- A generator notifies MWF management that the process generating the waste has changed; or
- The results of inspection or analysis indicate that the waste received at the MWF does not match the identity of the waste designated on the accompanying manifest or shipping paper or pre-acceptance documentation, and discussions with the generator indicate that the waste has permanently changed in composition and characteristics.

C-3 MANIFEST SYSTEM

C-3a Procedures for Receiving Shipments

Procedures for receiving incoming shipments of waste are detailed in Section 4 of the WAP, Attachment 1. At a minimum the following procedure is implemented for each waste shipment received at the MWF:

- Manifest or shipping paper is checked against the shipment to determine if there are any significant manifest discrepancies as defined by WAC 173-303-370(4).
- Significant discrepancies, if any, are noted on the manifest or shipping paper.
- The manifest or shipping paper is signed and dated.
- The transporter is given one copy of the signed manifest or shipping paper before leaving the MWF.
- A copy of the manifest or shipping paper is sent to the generator within 30 days.
- A copy of the manifest or shipping paper is retained at the facility for at least three years from date of delivery.

C-3b Response to Significant Discrepancies

Procedures to resolve discrepancies found with receiving incoming shipments of waste are detailed in Section 4 (Waste Receipt) of the WAP. At a minimum, MWF management will discuss and attempt to resolve with the generator any discrepancy between the received waste and that shown on the manifest. If the discrepancy cannot be resolved within 15 days after receiving the waste, MWF management will notify the Department of Ecology in writing of the discrepancy and the attempts to reconcile it, and provide a copy of the manifest at issue.

C-3c Provisions for Non-acceptance of Shipment

C-3c(1) Non-acceptance of Undamaged Shipment

MWF management may reject waste shipments during incoming waste shipment for any of the following reasons:

- The MWF is not capable of properly managing the type(s) of dangerous waste in the shipment
- The generator's paperwork is not in order;
- A manifest discrepancy cannot be resolved to the generator's and MWF management's satisfaction;
- The shipment has arrived in a condition that presents an unreasonable hazard to facility operations; or
- A bulk liquid shipment is incompatible (fails a liquid waste compatibility determination) with wastes stored in the bulk liquid feed tank and no other management method is available.

C-3c(2) Activation of Contingency Plan for Damaged Shipment

Each container and ~~each bulk shipment~~ will be weighed and visually inspected for proper labeling, damage, leaking or open containers, and waste containment. Bulk liquids received in tanker trucks will be tracked using flow meters prior to being unloaded into storage tanks. The tankers will be visually inspected for proper placarding, damage or leaking. MWF management will determine if waste shipments with damaged, leaking, or open containers should be accepted. Should the damaged shipment present a potential hazard to the public health and the environment, the MWF Contingency Plan (Attachment 15) will be put into effect immediately.

C-4 TRACKING SYSTEM

Dangerous waste received or generated at the MWF will be tracked from the point/time of receipt or generation through shipment off-site by assigning a unique identification number to each container of dangerous waste either received from off-site generated on-site. Assigning a unique identification number to each container allows tracking each container or waste shipment as it moves through the facility (e.g., receiving, storage, processing, and shipment off-site).

C-4a Container Identification

Each waste container received at the MWF is assigned a unique identification number. Waste information (e.g., waste profile, management method, and storage location) for each container received, processed, or generated at the MWF is linked to this identification number.

C-4a(1) Locating A Container In Storage Using the Waste Tracking System

Known information about the waste (e.g., generator name, waste name, date received, or management method) are used to locate the waste's manifest. If all that is known is the name of the generator, the generator's identification number can be obtained from the waste files, and the files are then searched to identify wastes received from the generator.

From the information in the operating record one can find the unique identification number of each waste container. By accessing the storage records one can identify the storage location of the container. If the container is present in the storage area or a treatment line it can be located by looking for its unique identification number.

C-4b Facility Record Keeping

A written operating record will be kept at the facility in accordance with WAC 173-303-380. Except where otherwise indicated, t~~T~~he operating record will be maintained until closure of the facility. Information in the facility operating record includes the following:

- A description of and the quantity of each dangerous waste received or generated on-site;
- Manifests of received waste for at least three years from the delivery date;
- Methods and dates of storage, treatment, and/or shipment off-site;
- The location of each waste within the facility;
- Quantity of each waste within the facility;
- The total quantity of each waste received at the facility during a calendar year;
- The total quantity of each waste treated at the facility during a calendar year;
- The total quantity of each treated waste shipped off-site during a calendar year;
- The complete treatment path for each waste accepted for treatment;
- Records and results of waste analyses including mixed waste profile records, analytical data, treatment evaluation results, waste rejection records, and treated waste verification information; and

- LDR notices and certification.

In accordance with WAC 173-303-380(2)(a), each dangerous waste received or is described by its common name and by its dangerous waste number(s) from WAC 173-303-080 through WAC 173-303-104. For wastes containing more than one process waste or waste constituent, the waste description includes all applicable dangerous waste codes and known dangerous waste numbers. Each waste description includes the following:

- The waste's physical nature (i.e., liquid, solid, sludge, or gas);
- The waste's chemical nature (i.e., acid, base, organic);
- The weight, or volume and density, of the dangerous waste in one of the units of measure specified in WAC 173-303-380, Table 1; and
- The date(s) and method(s) of management for each dangerous waste received or managed (stored, treated, recycled, or disposed) shall be recorded, using the handling code(s) specified in WAC 173-303-380, Table 2.

All facility records will be furnished upon request and made available at all reasonable times for inspection by any officer, employee, or representative of the Washington State Department of Ecology. During the course of any unresolved enforcement action regarding the facility, or as requested by Ecology, the retention period for all facility records will be extended. There will be no waste disposal at the facility, so submittal of disposal location records to the relevant authorities upon closure of the facility will not be necessary.

C-4b(1) Land Disposal Restrictions

Waste received at the facility will be subject to a review of the accompanying LDR notification along with the preliminary inspection given to the wastes. Any discrepancies in the LDR notification will result in the shipment being ineligible for acceptance until the generator clarifies the discrepancies.

Wastes resulting from treatment processes at the facility that exceed applicable LDR treatment are treated further to meet LDR treatment standards. LDR notification is supplied with each shipment of waste and will contain the information required under 40 CFR 268.7 and incorporated by reference in WAC 173-303-140 (2)(a). In addition to the LDR notification, any additional relevant information obtained from the generator will~~s~~ also be supplied to the off-site treatment facility.

Waste that are determined to meet treatment standards as specified in 40 CFR 268 and incorporated by reference in WAC 173-303-140 (2)(a) is either returned to the generator (in accordance with the generators instruction to MWF management) or shipped to an approved land disposed facility. An LDR notification and certification, including appropriate analytical records to support the certification will be supplied to the generator and/or receiving land disposal facility.

WASTE ANALYSIS PLAN

Attachment 1

MIXED WASTE FACILITY
RCRA/TSCA PERMIT

RICHLAND, WASHINGTON

TABLE OF CONTENTS

1. INTRODUCTION **4**

1.1 PURPOSE **4**
1.2 WASTE ACCEPTANCE CRITERIA **4**
1.3 RESTRICTED WASTES **4**
1.4 PROCESS LIMITS **4**

2. ANALYTICAL RATIONALE AND PARAMETERS **5**

2.1 PARAMETERS **6**
2.2 ANALYTICAL TEST METHODS **8**
2.3 SAMPLING METHODS **9**

3. PRE-ACCEPTANCE **9**

3.1 PROCEDURAL REQUIREMENTS **9**
3.1.1 Analytical and Written Information *9*
3.1.2 Pre-Acceptance Evaluation *10*
3.1.3 Pre-Acceptance Analysis *11*
3.1.4 Facility Conditions *11*
3.1.5 Alternative Treatment Standards *11*
3.2 GENERIC PROFILES **11**
3.3 DECISION EVALUATION LOGIC **12**
3.4 WASTE PROFILE RE-EVALUATION **13**
3.5 WASTE BROKERAGE **14**

4. WASTE RECEIPT **14**

4.1 REQUIRED LDR FORMS **14**
4.2 RECEIVING PROCEDURES **14**
4.2.1 Manifest/Shipping Paper Review and Vehicle Inspection *15*
4.2.2 Visual Inspection *16*
4.2.3 Verification Frequencies *16*
4.2.4 Exceptions *18*

4.3 INCOMING SHIPMENT DECISION EVALUATION LOGIC **18**

5.0 WASTE PROCESS CONTROL **20**

5.1 TREATMENT LINE 100 (SOLIDS/DEBRIS) **21**
5.1.1 Sampling and Analysis Performed *21*
5.1.2 Treatment Line description *22*
5.2 TREATMENT LINE 200 (LIQUIDS/SLUDGE) **23**
5.2.1 Sampling and Analysis Performed *23*
5.2.2 Treatment Line description *24*
5.3 TREATMENT LINE 300 (METAL/LEAD DEBRIS) **27**
5.3.1 Sampling and Analysis Performed *27*
5.3.2 Treatment Line description *27*
5.4 TREATMENT LINE 400 (HETEROGENEOUS SOLIDS/DEBRIS) **29**
5.4.1 Sampling and Analysis Performed *29*
5.4.2 Treatment Line description *29*
5.5 TREATMENT LINE 500 (ORGANIC LIQUIDS/HAZARDOUS WASTEWATER~~SOLIDS GASVIT~~30
5.5.1 Sampling and Analysis Performed *31*
5.5.2 Treatment Line Description 31

5.6 STORAGE 33

6.0 REQUIRED CERTIFICATIONS AND NOTIFICATIONS 37

TABLES

Table 1	Wastes Restricted from MWF	41
Table 2A	Line 100 - Solids/Debris Process Tolerance Limits	43
Table 2B	Line 200 - Liquid/Sludge Process Parameters	51
Table 2C	Line 300 - Metal/Lead Debris Process Parameters	60
Table 2D	Line 400 - Heterogeneous Solids/Debris Process Tolerance Limits	62
Table 2E	Line 500 - Hazardous Wastewater~~Organic Liquids/Solids (GASVIT)~~ Process Tolerance Limits	64
Table 2F	Line 600 - Container Storage Process Tolerance Limits	66
Table 3	Fingerprint Parameter Tolerance Limits	68
Table 4	Materials and Debris Potentially Contaminated with Regulated PCBs	69
Table 5	Ignitable, Corrosive, and Reactive Waste by Treatment Unit	69
Table 6	Solids/Debris Pre-treatment Analyses	70
Table 7	Solids/Debris In-process Analyses	70
Table 8	Solids/Debris Post-treatment Analyses	71
Table 9	Liquid/Sludge Pre-treatment Analyses	72
Table 10	Liquid/Sludge In-process Analyses	73
Table 11	Liquid/Sludge Post-treatment Analyses	74
Table 12	Metal/Lead Debris Pre-treatment Analyses	75
Table 13	Metal/Lead Debris In-process Analyses	76
Table 14	Metal/Lead Debris Post-treatment Analyses	77
Table 15	Heterogeneous Solids/Debris Pre-treatment Analyses	78
Table 16	Heterogeneous Debris In-process Analyses	78
Table 17	Heterogeneous Solids/Debris Post-treatment Analyses	79
Table 18	Hazardous Wastewater~~Organic Liquids/Solids GASVIT~~ Pre-treatment Analyses	80
Table 19	Hazardous Wastewater~~Organic Liquids/Solids GASVIT~~ In-process Analyses	81
Table 20	Hazardous Wastewater~~Organic Liquids/Solids GASVIT~~ Post-treatment Analyses	83

FIGURES

Figure 1	Pre-acceptance Logic Flow Diagram
Figure 2	Brokerage Logic Flow Diagram
Figure 3	Waste Acceptance Process Logic Flow Diagram
Figure 4	Functional Flow Description - Line 100 Solids/Debris
Figure 5	Functional Flow Description - Line 200 Liquids/Sludge
Figure 6	Functional Flow Description - Line 300 Metals/Lead Debris
Figure 7	Functional Flow Description - Line 400 Heterogeneous Solids/Debris
Figure 8	Functional Flow Description - Line 500 Hazardous Wastewater~~Organic Liquids/Solids (GASVIT)~~

This page left intentionally blank.

1.0 INTRODUCTION

In accordance with the regulatory requirements of Washington State Administrative Code (WAC) 173-303-300, *Waste Analysis*, this Waste Analysis Plan (WAP) has been developed for the Mixed Waste Facility (MWF). A copy of this WAP is available at the facility at all times.

1.1 Purpose

The purpose of this WAP is to provide information necessary for the safe management of dangerous waste, hazardous waste, and Toxic Substances Controlled Act (TSCA) regulated polychlorinated biphenyl (PCBs) waste (all of which is herein referred to as waste) at the MWF. This plan establishes the process and procedures that will be used for waste analysis from pre-acceptance, receiving, storage, treatment and final disposition of received waste or generated waste.

The plan divides the control of waste into the following three activities:

- Pre-acceptance (Section 3),
- Waste receipt (Section 4), and
- Waste process control (Section 5).

Pre-Acceptance identifies the procedures used to evaluate a generator's waste stream prior to accepting the waste stream for treatment. Pre-acceptance evaluations allow facility management to determine whether a generator's waste can be safely managed and properly treated within the bounds of the facility permit, applicable regulatory requirements, and facility treatment capabilities.

Waste receipt identifies the procedures used to accept a waste shipment from a generator. Waste receipt allows facility management to confirm that a generator's waste shipment received at the facility is the same waste that was approved during the pre-acceptance evaluation.

Waste process control identifies the process limitations and parameters of each treatment line. Waste process control allows facility management to identify the waste characteristics necessary to properly manage and treat a generators waste within the bounds of the facility permit and treatment capabilities, and to certify that such treatment has met all applicable treatment standards.

1.2 Waste Acceptance Criteria

Any waste carrying a dangerous waste code listed in the WMF Part A Application could be accepted for treatment or storage. Typical waste types may include bulk solids (soil, gravel, granular solids, filter cake, tank heels, etc.), debris, bulk liquids (organic and inorganic), bulk metals (sheet metal, pipes, lead, etc.), ~~and~~ heterogeneous solids (personal protective equipment, spill cleanup kits, etc.), and hazardous wastewater. Each waste will be treated by one of the five MWF treatment lines discussed in section 5. (Waste Process Control).

1.3 Restricted Wastes

Certain waste will not be treated at the MWF. These wastes are defined as restricted; Table 1 (Wastes Restricted from MWF) identifies these excluded wastes.

In the event the MWF inadvertently receives a restricted waste the waste will be stored in a storage area located for example in WSB room 1 or room 4 area until the waste can be transferred back to the generator or transferred to another facility permitted and equipped to manage the waste.

Only radioactive mixed waste requiring management in accordance with all applicable regulations under the authority of the Atomic Energy Act and the Nuclear Policy Act will be accepted at the MWF.

1.4 Process Limits

Tolerance limits have been developed for each treatment process unit describing the range of wastes that each process unit can treat based on the unit's design. Waste that do not fall within the process tolerance limits for a specific unit will not be approved for processing through the unit unless pre-treatment of the waste at the MWF or generators site brings it within the tolerance of the process. Tolerance limits and their rational for each process unit are provided in Tables 2A - 2F.

2.0 ANALYTICAL RATIONAL AND PARAMETERS

The parameters chosen for screening and detailed analysis of the expected MWF waste streams is described below. The analytical procedures and sampling are discussed in Appendix A, Sampling Plan (SP), and Appendix B, Quality Assurance Plan (QAP). Samples are analyzed to:

- Confirm generator-supplied waste profile information;
- Verify pre-existing waste characterization;
- Determine the applicable management requirements for the waste;
- Comply with the MWF acceptance criteria;
- Define operational parameters for various treatment lines; and
- Confirm the applicable treatment standards are met.

The mixed waste facility management selects the appropriate parameters noted in Section 2.1 to provide sufficient information to safely store and manage received waste according to the requirements for: 1) pre-acceptance (Section 3), 2) incoming waste shipment verification (Section 4), and 3) process control (Section 5). Parameter analyses performed during receipt are not repeated unless there has been an intermediate-processing step that changes the characteristic of the waste in a manner such that facility management deems it necessary to retest the waste to maintain safe and compliant operations.

All incoming waste identification samples are subject to the selected parameter analyses as a first step in verification of the waste. Additional parameters may be used to obtain information required for efficient process control, safe, and compliant operations, or to further evaluate the waste.

This allows a tiered approach to waste identification and parameter selection to adequately identify the waste or to define operational parameters for the various treatment processes.

2.1 Parameters

Parameters include screening procedures or "fingerprints" that are performed to identify the waste and indicate the most appropriate management. Fingerprint parameters include but are not limited to the following:

Physical description identifies waste by describing the general physical properties of the waste (e.g., color, turbidity, physical state).

Ignitability indicates the fire-producing potential of the waste. This test identifies any obvious difference in waste type such as waste flammable solvent substituted for waste mineral acid.

pH Screening indicates the pH of the waste. pH may not apply to certain waste types, for example, organic wastes, or wastes which are not water soluble.

Explosive vapors indicate the presence of explosive vapors that may be present in a waste.

Cyanides Screening identifies if the waste produces hydrogen cyanide upon acidification below pH 2. Cyanide screening does not apply to liquid waste with a pH less than 2. The need for cyanide screening on a solid and semi-solid waste with a pH less than 2 will be determined on a case by case basis.
Sulfide Screening identifies if the waste produces hydrogen sulfide upon acidification below pH 2. Sulfide screening does not apply to liquid waste with a pH less than 2. The need for sulfide screening on a solid and semi-solid waste with a pH less than 2 will be determined on a case by case basis.

Flash Point further characterizes ignitable liquid waste to establish the proper storage mode and conformance with permit conditions.

Mercury Screening determines the presence of mercury in the waste.

Polychlorinated biphenyls (PCB) Screening identifies PCBs in the waste.

Water Compatibility determines if a waste has the potential to generate extreme heat or violent reactions, and produce fumes, dust, gases, or other products when mixed with water.

Specific Gravity or Bulk Density indicates the density of the waste. This information is used to convert weight of liquids to volume (and reverse) as well as to further characterize the waste. It is also a key parameter for identifying changes in a waste.

Table 3, Fingerprint Parameter Tolerance Limits, provides the acceptable variability range for each of the fingerprint parameter identified above. Table 4, Methods for Fingerprint Parameters, of Appendix B, Quality Assurance Plan, identifies the test method for each of the parameters identified above.

Along with fingerprint analyses facility management may choose to evaluate other parameters of the waste to ensure that the waste does not exceed the selected treatment process tolerance limit ~~(for example, total chlorine for the GASVIT™ system)~~. Other parameters include but are not limited to the following:

Liquid Waste Compatibility determines whether liquid wastes which are to be combined together are compatible.

Metals by Atomic Absorption and/or ICP quantifies the concentration of specified metals in a waste to determine treatment requirements.

Paint Filter Test verifies the presence or absence of free liquid in a waste.

pH by Meter provides a more precise measurement of pH and an indication of corrosivity when determining process parameters.

Solids content indicates the percent solids in a waste when determining process parameters.

Moisture content indicates the percent moisture in a waste when determining process parameters.

Total and Amenable Cyanides quantifies the concentration of all unbound and most complex cyanides (total cyanides) and/or cyanide species amenable to alkaline chlorination (amenable cyanides). Results may be used for treatability determinations, to monitor treatment processes, and/or to meet disposal restrictions.

Total Organic Carbon is used to quantify the organic/carbonaceous waste present.

Recipe Development is performed to determine whether the waste is amenable to stabilization, and to determine the ratio of reagent-to-waste and other recipe specifications required for successful stabilization.

PCB analysis by Gas Chromatography/Mass (GC/Ms) is performed when a higher level of precision and accuracy is required to determine the presence and concentration of PCBs in the waste.

Toxicity Characteristic Leaching Procedure (TCLP) determines if a waste is hazardous because it exhibits "toxicity characteristics." The TCLP is also used under 40 CFR 268 to evaluate if treated waste meets the LDR treatment standards.

Results of these parameters provide facility management another level of confidence concerning the proper treatment and storage of incoming wastes.

Additional analyses may be used to further evaluate a waste when one or more of the following conditions are meet:

- If a discrepancy is noted during testing and additional information is required to determine how to manage the waste;
- If additional or more precise information is required to manage the waste safely within the MWF permit conditions;
- If facility management believes that the composition of the waste has changed; or
- Other reasons as determined by facility management.

Tables 1, 2, and 3 of Appendix B, Quality Assurance Plan, identify the test methods and detection limits for the parameters identified above, process parameters, and treatment standards.

2.2 Analytical Test Methods

The test methods used for measuring the selected parameters are chosen from technical methods described in the following publications:

- The most recent promulgated edition of *Test Methods for Evaluating Solid Waste: Physical/Chemical Methods*, SW-846, U.S. Environmental Protection Agency, Office of Solid Waste;
- *Standard Methods for the Examination of Water and Wastewater*, 18th Edition, American Public Health Association (APHA), American Water Works Association, Water Environment Federation;
- *Annual Book of ASTM Standards*, American Society for Testing and Materials (ASTM);
- *Chemical Testing Methods for Designating Dangerous Waste,* Washington State Department of Ecology; Publication No. 97-407; ~~February 1998~~June 2009, and
- Other widely accepted analytical methods, proprietary methods, and non-standard methods. These methods may be needed in special cases to develop operational and safety related information at the discretion of facility management.

- Parameters will be selected that apply to the specific waste. Parameters will not be specified where they are clearly not applicable to the waste (e.g., pH for non-aqueous waste or organic liquids, Total Organic Compound (TOC) for organic liquids). Fingerprint parameters provide a control point to prevent accepting and processing waste that does not meet the permit requirements or treatment tolerances. The MWF will use acceptable variability based upon information in the generators approved waste profile. The variability (i.e., +/- 30%) will be used as a "flag" to determine if a waste discrepancy exists. Limits of acceptable fingerprint parameter variability are provided in Table 3, (Fingerprint Parameter Tolerance Limits).

2.3 SAMPLING METHODS

Specific methods are described in the *Sampling Plan (*Appendix A and Appendix F.)

3.0 PRE-ACCEPTANCE

A series of control procedures have been developed to determine if specific wastes can be accepted for management at the MWF. The pre-acceptance procedures dictate what information must be obtained from the generator (or must be developed by the MWF) to determine if the waste can be accepted for management. At a minimum, the MWF must obtain all of the information required by WAC 173-303-300, and other information necessary to manage a waste stream. Standard or generic waste profiles may be developed for use as part of the pre-acceptance procedures; see section 3.2 for a discussion of generic profiles.

Pre-acceptance is a mechanism for deciding whether to approve a particular type of waste, prior to its acceptance by the facility, based on the following:

- conditions or limitations of existing facility permits and applicable regulations
- treatment capabilities of the facility
- the nature of the waste
- the compatibility of the waste with the proposed treatment process (e.g., treatment equipment, reagents, protective coating, ~~GASVIT™ refractory,~~ containers, etc.)
- the compatibility of the waste with other waste being managed at the facility.

The pre-acceptance procedures may be carried out by the employees at the MWF or at the generator's site and will be performed and completed upon waste receipt (prior to acceptance) of a shipment of waste. Similarly, when a generators waste profile approval is renewed the pre-acceptance procedures may be carried out by the employees at the MWF or at the generator's site and will be performed and completed upon waste receipt (prior to acceptance) of the next shipment the waste.

Pre-acceptance evaluation begins with a technical review of the generator's waste characterization presented on the waste profile sheet and any attached sample analyses and certifications. The applicable sections of the waste profile sheet must be completed to allow a thorough pre-acceptance evaluation of the generator's waste stream. If applicable sections are incomplete, the waste profile sheet is returned to the generator for completion. Alternatively, the MWF employees may complete the waste profile sheet with additional information obtained from the generator. In this case, the waste profile must clearly identify which information was obtained from the generator, and a record must be maintained to document which MWF staff and generator staff were involved, the date(s) the information was exchanged, and any other data which will document and trace the source of the information. The revised waste profile sheet must then be reviewed and certified by the generator. When the waste profile sheet is complete, it is evaluated against waste codes listed in Part A of the Permit, and against restricted wastes and process tolerance limits in Table 1 and 2 to determine if the waste should be accepted or rejected. Figure 1 provides a logic diagram of the pre-acceptance process.

3.1 Procedural Requirements

The following procedures apply to new waste streams that are candidates for delivery to the facility.

3.1.1 Analytical and Written Information

The MWF obtains the following written and analytical information:

- Pertinent chemical and physical data on the waste profile;

- A sample, if necessary. A sample may not be required if (1) the pre-acceptance documentation gives sufficient information to maintain compliance with permit and operational constraints and (2) the submittal of a sample would not materially aid in the treatment decision process. If necessary, the sample may be obtained upon receipt of the initial shipment of the waste prior to acceptance (or re-evaluation of waste profile).

- LDR notification/certification information and/or data as provided in WAC 173-303-140 (40 CFR 268.7), if applicable; and

- When appropriate, other supporting documentation such as Material Safety Data Sheets (MSDS) and product ingredients.

The waste profile sheet, provided as an example in Appendix C "Forms", identifies the minimum informational requirements that generator must supply to properly evaluate the generators' waste stream and approve the waste profile. The generators may be requested to provide additional information, not included on the example waste profile sheet provided in Appendix C, and may change the format of the waste profile sheet without requiring a permit modification.

During pre-acceptance the MWF staff evaluates the generator-supplied written and analytical information to determine if the information is sufficient to safely manage and treat the waste. At a minimum the generator must supply enough information for the waste to be safely managed and treated at the MWF.

3.1.2 Pre-Acceptance Evaluation

After the MWF staff has evaluated the generator-supplied information and determined that the available information is sufficient to complete the pre-acceptance evaluation, the MWF staff will perform the following pre-acceptance activities:

- Identify compatibility characteristics of the waste stream;

- Determine the specific waste storage and treatment methodologies necessary for proper management of the waste;

- Select process control parameters, if any are applicable, for proper storage and treatment of the waste;

- Determine if a pre-shipment sample for recipe development study is needed or if additional analytical information is required to confirm that the waste meets the MWF permit and process limitations are consistent with the generator's characterization;

- Select analytical parameters for receipt control that will be used to confirm the identity and acceptability of each waste shipment; and

- Develop necessary safety guidelines for handling wastes in accordance with OSHA requirements.

3.1.3 Pre-Acceptance Analysis

A waste sample will be analyzed for the selected parameters to provide information to determine if the waste can be managed, and/or if the waste sample matches the waste identified in the accompanying pre-acceptance paperwork. Additional parameters may be selected and evaluated by management. For example, a treatment test may be performed on a sample of a waste stream to identify the proper stabilization to waste ratio required to meet the applicable treatment standards for the waste.

3.1.4 Facility Conditions

After reviewing the pre-acceptance information and any data from waste sample analyses, the MWF staff will determine the acceptability of the waste based on:

- The permit conditions for the MWF;
- The availability of the proper waste management techniques (i.e., treatment and storage); and
- The available storage capacity at the MWF.

3.1.5 Alternative Treatment Standards

Hazardous debris waste streams subject to the alternate treatment standards WAC 173-303-140 (40 CFR 268.48) will be evaluated to determine:

- The geometric shape of the debris;
- The hazardous constituents present on the debris; or
- Whether the debris is contaminated on the outer surfaces, the internal surfaces, or both.

Based on these criteria it will be determined if the debris can be accepted for macro-encapsulation~~,~~ or physical extraction ~~or GASVIT™~~.

3.2 GENERIC PROFILES

Generic profiles may be used for waste streams that are:

- Similar in physical and chemical characteristics; and/or
- Generated by similar industries or processes.

This profile designation is consistent with the EPA approach of assigning a listed waste code to similar process wastes. All the wastes within a generic profile are managed at the MWF using the same treatment process.

A database will be developed for specific generic profiles based on physical and chemical characteristics from waste streams generated from similar industries and/or processes. The MWF staff will review the database and determine whether the individual waste streams are sufficiently similar in physical and chemical characteristics to establish a generic profile. The database developed may replace any requirement for a pre-acceptance sample for an individual waste stream.

The MWF staff will compare generator provided information on a specific waste stream to an established generic profile, and determines if the stream conforms to the profile. Specific candidate waste streams that conform to an approved generic profile will be managed under the existing waste management decision specific to that generic profile. For example, a waste meeting the generic profile for stabilization treatment will be stabilized without performing a separate treatability test.

3.3 Decision Evaluation Logic

Management decides whether to accept or reject the waste. Samples required for wastes being considered for acceptance are subject to the selected parameter analyses. Other parameter analyses could also be required for specific waste treatment lines. Treatment line operation and the associated analyses are described in Section 5 (Waste Process Control).

Management may require additional parameter analyses to screen sample contaminants and/or properties, based on the following:

- Waste profile sheet description of the wastes chemical and physical properties;
- Waste profile sheet description of the process generating the waste;
- Any additional documentation, including information that the waste is subject to LDR of 40 CFR Part 268 or WAC 173-303-140;
- Results of any parameter analyses; or
- Management's experience and judgment.

The pre-acceptance evaluation concludes with documenting whether the waste is accepted and the proposed method of management. Management's technical treatment and storage decisions are based on:

- Management methods available;
- Conditions or limitations of existing permits and regulations;
- Capability to manage the waste in a safe and environmentally sound manner;
- Waste profile sheet description of the process generating the waste;
- Waste profile sheet description of the chemical and physical properties of the waste;
- Any additional documentation, including information that the waste is subject to LDR of 40 CFR Part 268 or WAC 173-303-140, and
- Results of the parameter analyses.

A waste may be rejected during the pre-acceptance process for any of the following reasons:

- Significant discrepancy(ies) between pre-acceptance sample analysis results and analytical information provided by the generator;
- Incomplete or outdated information provided by the waste generator;
- The waste category is specifically excluded from acceptance at the MWF; and
- The waste cannot be safely and/or effectively treated, processed, or stored at the MWF.

3.4 Waste Profile Re-evaluation

In accordance with WAC 173-303-300 [40 CFR 264.13], a waste profile will be re-evaluated if:

- a generator notifies the MWF staff that the process generating the waste has changed, or
- inspection or analysis indicates that the waste received at the MWF does not match the waste identified on the accompanying manifest or shipping paper or pre-acceptance documentation.

When a waste profile is re-evaluated the MWF staff may request the generator to do one of the following:

- Verify that the current waste profile is accurate;
- Supply a new waste profile; and/or
- Submit a sample for parameter analysis.

In addition, each ~~twelve (~~12~~)~~ months a waste profile will be re-evaluated by reviewing the paperwork to verify that the analytical data is accurate, current and sufficient to properly manage the waste as intended. The generator may be asked to review the current waste profile and re-evaluation to confirm the information. Also, the MWF may obtain a sample from the generator or from a shipment of the waste for parameter analyses.

3.5 Waste Brokerage

A generator may use the MWF employees for packaging their waste for transport to the MWF. Once management approves the waste for treatment and storage at the MWF, the MWF employee performs the following activities.

- Supervise the packaging of the generator's waste sent to the MWF for treatment;
- Perform verification sampling of the packaged waste;
- Place a tamper seal on each closed container;
- Record the identification number on each container ready for shipment; and
- Notify facility management of any discrepancies found during verification sampling of the waste.

After packaging, the waste may be shipped to the MWF or remain in storage at the generator's site for future shipping. Both facility management and the generator will agree on the exact timing of the waste shipment. Waste packaged and sampled under the supervision of a MWF employee at a generator's site is not inspected and/or sampled during the acceptance process when the waste is received at the MWF, unless the waste containers have been tampered with (e.g., broken tamper seal). Figure 2 is a logic diagram of process.

If the MWF receives containers that have been tampered with, the container will be opened for visual inspection and sampled to verify waste content. The MWF staff will notify the generator and work with the generator to identify the reason for the tamper seal being broken.

4.0 WASTE RECEIPT

This section describes the incoming waste shipment procedures for receiving waste at the MWF.

Each waste shipment coming to the MWF is inspected, sampled and analyzed as described below before any further activity at the MWF. This serves two purposes:

- It compares the actual waste identity with that described during pre-acceptance and with that listed on the waste manifest, and
- It further ensures the proper disposition of the waste to appropriate on-site treatment and storage.

Waste shipments that have arrived at the facility are in the receiving process until the management decides waste acceptability and storage space availability. See Figure 3 (Waste Acceptance Process Logic Flow Diagram).

4.1 Required LDR Forms

All wastes subject to the ~~Land Disposal Restrictions (~~LDR~~)~~ WAC 173-303-140 [40 CFR Part 268] and that meet the appropriate treatment, or variance, or that meet the appropriate treatment standard or prohibition without treatment, must be accompanied by a form from the generator, certifying that the treated, exempted or variance waste meets the appropriate treatment standards. This form must include the applicable analytical data or reference to such data or documentation to support the certification in accordance with 40 CFR Part 268.

All wastes subject to LDR and require treatment must be accompanied by a form from the generator notifying the MWF of the appropriate treatment standards and all applicable prohibitions in accordance with 40 CFR Part 268.

4.2 Receiving Procedures

Incoming waste shipment identification begins in conjunction with the arrival of the waste at the MWF. The inspection, sampling, and analysis of the incoming waste are performed in accordance with the methods described in this section and Appendix A, Sampling Plan.

Containerized waste will be managed (e.g., separated and segregated) as described in Attachment 2, Container Management Plan. In accordance with Attachment 2, the following time constraints for off-loading and accepting a waste shipment are as follows. The MWF will have 24 hours to off-load waste containers once the initial survey of the vehicle has been completed (i.e., verifying the transportation index, radiation level, etc.) and the shipping papers have been reviewed for completeness.

Once waste is off-loaded from the vehicle, the MWF will comply with the following time line to manage the waste:

Within ~~twenty-four (~~24)-hours of initial receipt of waste shipment (initial survey, check physical count, and manifest off load waste	If manifest discrepancies are found, containers are not off loaded, and shipment is rejected and returned to generator.

containers.)$_a$	
Within seven (7) days of off loading waste containers, start waste verification.$_b$	If waste verification is not started, waste will be moved to a segregated storage are and held until verification has started.$_c$
After start of waste verification, complete verification within ~~thirty (~~30~~)~~ days.$_d$	If waste verification is not completed within ~~thirty (~~30~~)~~ days, waste is moved to the reject storage area.$_e$
If waste verification is not completed within ~~thirty (~~30~~)~~ days due to a discrepancy, the generator must be contacted, and the discrepancy resolved within ~~fifteen (~~15~~)~~ days.$_f$	If a discrepancy is not resolved within ~~fifteen (~~15~~)~~ days, waste is rejected, and within ~~thirty (~~30~~)~~ days (after the ~~fifteen [~~15~~]~~ days have expired), provide agencies with a waste disposition plan for this waste for approval.
Within ~~ninety (~~90~~)~~ days after completion of waste verification, start treatment.$_g$	If treatment is not started within ~~ninety (~~90~~)~~ days from verification, submit a request for extension to the agencies for approval.$_h$
Within ~~three hundred and sixty-five (~~365~~)~~ days after waste receipt or generation, waste will be treated and shipped off site, if necessary, for final disposal.	

(See Figure II- 1 of the Permit for the Storage and Treatment of Mixed Waste and for Storage and Disposal of Mixed-~~Toxic Substances Control Act (~~TSCA~~)~~ Regulated ~~Polychlorinated Biphenyl (~~PCB~~)~~ Wastes for Flow Diagram. Subscript letters link the steps to the flow diagram).

If the discrepancy cannot be resolved, the MWF will either return the container to the generator or transport the container to a facility identified by the generator that is permitted to received and manage the waste. The affected container will remain in the rejected storage area until it is shipped off-site. The MWF will review any acceptance discrepancies to determine if they constitute a significant manifest discrepancy requiring reporting in accordance with WAC 173-303-370 or 40 CFR 761.208 as applicable.

4.2.1 Manifest/Shipping Paper Review and Vehicle Inspection

The following procedure is implemented for each waste shipment received at the MWF.

1. At the gate to the facility, the vehicle is surveyed to verify the reported radiation levels and transportation index.

2. The manifest or shipping paper is checked against the waste shipment to determine if there are any significant manifest discrepancies as defined by WAC 173-303-370(4).

3. If there are no discrepancies, the truck is authorized to enter the MWF site. The rail vehicle will be inside the property boundary fence, but remain outside the RCA fence during loading and unloading.

4. The waste containers are off-loaded from trucks either inside the MWF, on the truck loading area or on the rail loading area, piece counted, and moved to the STB, ~~GVB~~ MWTHB or WSB. Waste containers delivered via rail will be transferred at the rail loading area to a truck to be moved to the MWF or truck loading area, where they will be piece counted, and moved to the STB, ~~GVB~~ MWTHB, or WSB. Hazardous wastewater received by tanker trucks and slated to be processed in TP-16 will be fingerprinted and unloaded into feed storage tanks located in the MWTH building.

5. Significant discrepancies, if any, are noted on the manifest or shipping paper.

6. The manifest or shipping paper is signed and dated.

7. The transporter is given one signed copy of the manifest or shipping paper before leaving the MWF.

8. A copy of the manifest or shipping paper is sent to the generator within 30 days.

9. A copy of the manifest or shipping paper is retained at the facility for at least three years from date of delivery.

4.2.2 Visual Inspection

Each bulk shipment of waste is visually inspected to verify the waste description provided on the approved waste profile sheet and accompanying manifest. Likewise, each container is opened and visually inspected to verify the waste description provided on the approved waste profile sheet and accompanying manifest. Visual inspection facilitates the subjective comparison and verifies the observable presence or absence of unexpected waste forms (i.e., free liquids, restricted waste forms).

If regulated PCBs are found when they are not expected, the MWF staff will contact the generator to determine if the PCBs are TSCA regulated or Washington State regulated. If the PCBs are TSCA regulated then the MWF staff will notify U.S. EPA Region X as required by 40 CFR 761.208. If the PCBs are Washington State regulated, the MWF staff will notify the Washington Department of Ecology as required by WAC 173-303-370. These wastes will be moved and placed in the "container reject" area as soon as such a discrepancy is discovered. The rejected waste will be kept there and management will have 15 days to complete the resolution process. This will include notifying the generator and attempting to resolve the discrepancy. If it becomes evident that the waste cannot be processed at the MWF, arrangements will be made for returning the waste back to the generator or another facility, as authorized by the generator before the 15 day resolution period expires. If the waste discrepancy is successfully resolved, the waste will be formally accepted and it will be moved to the appropriate designated storage areas.

Table 4, Materials and Debris Potentially Contaminated with Regulated PCBs, provides examples of types of materials to look for during visual inspections. These materials have been found to have PCBs present, and include materials used in duct systems and insulation, paint formulations, coatings for ceiling tiles, roofing material, and siding material.

4.2.3 Verification Frequencies

The MWF staff will initially perform verification sampling on 10% (e.g., one container in ten or a fraction of thereafter) of the containers of each waste stream received per generator. If a generator's waste stream fails acceptance then facility management will contact the generator to resolve the acceptance discrepancy and will require that 25% (e.g., one container in four or fraction thereafter) of the containers in the next shipment of the generator's waste stream that failed acceptance at the 10% level be sampled. If the generator's waste fails at the 25% level facility management will contact the generator to resolve the acceptance discrepancy and will require 50% (e.g., one container in two or fraction thereafter) of the containers in the next shipment of the generator's waste stream that failed acceptance at the one in four level to be sampled. If the generator's waste stream fails at the 50% level then facility management will contact the generator to resolve the acceptance discrepancies and will notify the generator that a moratorium will be placed on the non-compliant waste stream until facility

management and the generator have further characterized the waste. Once the non-compliant waste has been further characterized facility management will notify the generator that the waste stream is approved for shipment to the MWF. The MWF will perform verification sampling on 50% of the containers received.

Facility management may reduce the verification frequency of a generator's waste stream if after two consecutive shipments the waste stream passes acceptance. However, the minimum verification frequency will be 10% of the containers of each waste stream received per generator.

Anytime a generator's waste stream fails, the MWF staff will perform sampling on all of the containers for the waste stream for the shipment.

4.2.3.1 Bulk Waste

Bulk solid waste is non-liquid debris and contaminated soil that arrives in: 1) B-25 boxes 2) IBCs, and 3) ISO (20' x 40') containers. Each bulk solid and liquid waste shipment is visually inspected, sampled and analyzed as necessary for the applicable parameters, except as noted in Section 4.2.3 or where large volumes of a single waste character are received from a single source (for example, dump truck, or roll-off bin truck loads from a major site cleanup of contaminated soil).

Dump truck or roll-off bins will be inspected and sampled as follows: 50%~~ percent~~ of the first ten truck loads will be sampled. In addition, every truck load will be visually inspected and any truck load showing visible variations in color, texture or wetness will be subject to sampling. If there is no variation among the sampled truck loads, the sampling regime will be reduced to 20%~~ percent~~ of the truck loads thereafter. If the sampled truck loads do show variation the 50%~~ percent~~ sampling frequency will be re-instituted for the next 10 truck loads. If these do not show variation, then the frequency will return to 20%~~ percent~~ sampling.

Bulk liquid waste that arrives in tanker trucks for evaporation treatment will be visually inspected, sampled, and analyzed as necessary for the applicable parameters prior to unloading them in one of the four storage tanks located in MWTH.

4.2.3.2 Containers

Containers include drums and other small to medium sized receptacles that are designed for transporting materials. If a waste stream includes one or two containers, every container will be sampled. At a minimum, 10% of the containers in each waste stream from each generator will be randomly sampled (see Section 4.2.3). Parameter analyses are selected for waste profile and manifest comparison and to confirm the acceptability of the waste for the identified treatment line. In the event that a waste discrepancy is found in any container of an incoming shipment the MWF will document the waste discrepancy in the operating record and contact the generator to attempt to resolve the discrepancy.

Waste containers will be segregated by compatibility as they are off-loaded from the vehicle and placed in the containerized waste staging area (STB), ~~GVB~~ MWTH, or WSB. Waste containers will continue to be segregated as they are opened for visual inspection and any other required waste acceptance activities.

During container off-loading if a waste container is found to be leaking it will be addressed in accordance with the procedures described in the Contingency Plan. Any waste that was released due to

the leak will be cleaned up in accordance with the spill cleanup procedures listed in the MWF Contingency Plan (Attachment 15, Section 4.5.3 Spills and Releases).

4.2.4 Exceptions

Upon receiving certain waste streams the shipment of the containers are visually inspected and piece count is verified. The sampling and parameter analysis of these wastes listed below is not required unless determined to be necessary by facility management. If inspection results are consistent with the manifest or shipping papers and the pre-acceptance documentation, the waste is accepted.

Exceptions to sampling and analysis requirements include the following wastes:

- Small containers of waste in overpacked containers (lab packs) packaged in accordance with WAC 173-303-161 and not prohibited under LDR specified in WAC 173-303-140;
- "Empty" product containers as defined by WAC 173-303-160;
- Commercial products or chemicals in their original packaging: off-specification outdated, unused or banned. This also includes products voluntarily removed from the market place by a manufacturer or distributor;
- Site generated waste. Waste generated on-site can generally be characterized adequately by knowledge of the generating process or source of the waste; and
- Debris as defined by WAC 173-303-040. These materials will be visually inspected prior to acceptance in order to ensure that the waste meets the definition of debris and do not appear to be contaminated by a restricted hazardous constituent (e.g., debris that is contaminated with TSCA regulated PCBs but not manifested as a TSCA-regulated PCB waste).

These wastes are not sampled because they exhibit unusual or impractical sampling (e.g., lab packs, debris, etc.), and/or are of such a nature that their contents are known in sufficient and reliable detail both chemically and physically that sampling is not needed (e.g., outdated commercial products). Glove boxes and/or specialty enclosures will be utilized to inspect and sample waste that may present a safety concern to facility (e.g., alpha-contaminated waste, highly odorous waste). For the above exceptions, the MWF will complete the following:

- Obtain sufficient information on the chemical and physical characteristics for proper management of the waste;
- Verify that the waste is not a restricted waste listed in Table 1, Wastes restricted from MWF.
- Evaluate the waste to verify that applicable process tolerance limits, as specified in Table 2, Process Tolerance Limits, are met
- Evaluate the waste for compatibility prior to commingling with other wastes; and
- Obtain the LDR notification/certification required by WAC 173-303-140 (40 CFR 268.7), if any of these wastes are subject to LDR.
- Obtain the PCB treatment/dispose certification required by 40 CFR 761.3.

Sampling and parameter analysis of these wastes is not required unless specifically requested by management.

4.3 Incoming Shipment Decision Evaluation Logic

Management accepts or rejects each waste shipment utilizing the following major decision points:

Waste Identification: the effectiveness of the waste identification step is dependent on management experience and judgment and the following components: pre-acceptance, waste manifest review, and waste inspection. Additional factors also may influence the effectiveness of the waste identification process such as: waste sampling, analytical results, and LDR forms.

Additional Analysis (if necessary): Management decides whether additional parameter analyses are required for a particular waste as described in Section 2. Further testing is required if the results indicate discrepancies with respect to pre-acceptance information, or if management has reason to suspect that the waste composition has changed.

Waste Non-conformance: Management must classify the waste shipment as "non-conformance" if it is different in chemical or physical properties from the information on the waste profile, pre-acceptance information, or manifest. In addition, it is classified as a significant discrepancy if it were "significantly" different in quantity or type shown on the manifest as defined by WAC 173-303-370(4).

Four (4) major criteria are used to classify "non-conformance." They are:

- For bulk wastes, variations greater than ten (10) percent in weight;
- For containerized wastes (e.g., drums, boxes) any variation in piece count;
- If inspection or parameter analysis of any waste shipment determines differences in waste type or code, such as waste solvent substituted for waste acid, or toxic constituents not reported on the manifest or shipping paper; or
- If the non-conformance changes the originally approved method of management.

Non-conformance Waste Disposition: Non-conforming waste may be rejected or they may be re-evaluated for possible acceptance. The re-evaluation process determines whether a waste in the form identified by the MWF staff (i.e., not consistent with the waste profile, and/or manifest) can be managed at the MWF and whether or not the generator concurs with the identification. This process prevents the unnecessary movement of waste back and forth between the generator and the MWF, when waste can be managed by the facility. By eliminating this unnecessary movement, the facility is attempting to minimize potential exposure during transportation to human health or the environment. Re-evaluation is based on the following criteria:

- Discussions with or information from the generator;
- Facility conditions for storage and treatment;
- Additional parameter analyses will be performed as deemed appropriate by ~~facility~~ management; and
- Management judgment.

The waste is accepted if evaluation based on the above criteria indicates the waste can be accepted and the generator concurs with the waste identification. Management will discuss and attempt to resolve with the generator any discrepancies between the received waste and the manifest. If the discrepancy cannot be resolved within 15 days after receiving the waste, the MWF staff notifies Ecology, in writing, of the discrepancy and the attempts to reconcile it, and provide a copy of the manifest at issue (WAC 173-303-370 and 40 CFR 761.208).

A waste may be rejected during the incoming waste shipment process for any of the following reasons:

- The generators'/transporter's paperwork is not in order;
- A manifest discrepancy cannot be resolved to the generator's and satisfaction;
- Regulatory requirements (for example, specific permit conditions);
- A bulk liquid shipment is incompatible (fails a liquid waste compatibility determination) with wastes stored in the bulk liquid feed tank and no other management method is available; or
- Adequate segregated space is not available for containerized liquid wastes and special handling cannot be used to correct the deficiency.

Rejected wastes will be moved and placed in the "container reject" area as soon as such a discrepancy is discovered. The rejected waste will be kept there and management will have 15 days to complete the resolution process. This will include notifying the generator and attempting to resolve the discrepancy. If it becomes evident that the waste cannot be processed at the MWF, arrangements will be made for returning the waste back to the generator or another facility, as authorized by the generator before the 15 day resolution period expires. If the waste discrepancy is successfully resolved, the waste will be formally accepted and it will be moved to the appropriate designated storage areas.

The final decision to reject all or part of a waste shipment is made by management. Decisions are made as soon as the MWF staff has collected and considered all of the applicable information listed above. The MWF staff will strive to complete these decisions as early as practicable, but circumstances that prevent can cause delays in obtaining the information necessary to make an informed decision on the acceptability of the waste. Under such circumstances, the MWF staff will take appropriate action to facilitate the decision process. During this time, proper segregated staging locations are determined using available information (e.g., MSDS, waste profile) to provide sufficient information to ensure the waste is staged with compatible wastes.

5.0 WASTE PROCESS CONTROL

Each movement of waste within the mixed waste facility where changes in composition may occur make the waste potentially subject to additional inspection, sampling and analysis to determine the appropriate handling, treatment, and management. Many analyses needed for waste management are performed during incoming waste shipment activities. These procedures are not repeated unless it is known or believed that the waste characteristics have changed during storage or treatment that in the judgment of facility management that additional inspection or analyses are needed.

The proper treatment of a particular waste depends on appropriate sampling and analysis of the waste. In- process sampling and analysis at the MWF is divided into the three following segments.

Pre-treatment analyses confirm that the waste falls within the selected process tolerance limit parameters and allow fine-tuning of the process operational conditions for optimal treatment. These analyses are typically conducted concurrently with receiving analyses.

In-process analyses are performed to control the process and to monitor waste treatment progress.

Post-treatment analyses confirm successful treatment (i.e., the characteristics of the process effluent are such that it can be sent to the next step (e.g., disposal or further treatment) based on permit, regulatory WAC 173-303-140 (40 CFR 268) or process constraints. Waste or treatment residues

generated from treatment of land disposal restricted wastes will be analyzed and evaluated against the applicable treatment standards. Any treatment residue or waste sent off-site for disposal or further treatment will be accompanied by the appropriate certification/notification forms in accordance with WAC 173-303-140 (40 CFR Part 268).

Ignitable, corrosive, and reactive wastes require special management to minimize degradation to treatment equipment or any unexpected reactions during waste treatment.

Ignitable waste with a flashpoint less than 100° F will be ~~either fed to the GASVIT™ system or~~ deactivated in TP-9. Once the waste has been deactivated it will be further treated by carbon filtration and UV oxidation in TP-6 or stabilized in TT-3. It is important to note that this exclusion applies only to waste that has a flashpoint below 100° F. It does not apply to debris or media that is carrying an ignitable waste code (D001) but does not have a flashpoint less than 100° F.

Corrosive waste with a pH less than 2 or a pH greater than 12.5 will only be treated in TP-03, TP-04 or TP-09. After the waste has been deactivated (e.g., pH greater than 2 and less than 12.5) it will be further treated in TP-06 or TT-03.

Reactive waste, solids that is reactive for cyanide and/or sulfide will only be processed in TP-09~~ or GV-01~~. This is to minimize~~d~~ the~~e~~ possibility of the waste to come in contact of liquids or solids that would cause the uncontrolled liberation of hazardous level of cyanide and/or sulfide gases. Similarly, liquids reactive for cyanide and/or sulfide will only be treated in TP-04 and TP-09.

Table 5 identifies which treatment units can receive ignitable, corrosive, and reactive waste.

The following sections describe the various treatment systems used at the MWF for treating waste. Each section identifies the minimum pre-treatment, in-process, and post-treatment analyses required.

5.1 Treatment Line 100 (SOLIDS/DEBRIS)

Treatment line 100 is used to stabilize solids and sludge to meet the applicable treatment technology standard (STABL) or concentration treatment standard. Stabilization is a process where wastes are mixed with the following reagents (or waste reagents) or combinations of reagents: (1) Portland cement; or (2) lime/pozzolans (e.g., fly ash and cement kiln dust); and (3) other reagents (e.g., iron, salts silicates, and clays) to enhance the set/cure time and/or compressive strength, and/or to overall reduce the leachability of the metals or inorganics present in the stabilized waste. Appendix D provides an example of the treatability test procedure and protocol.

Figure 4, provides a functional flow description for treatment line 100.

5.1.1 Sampling and Analysis Performed

Pre-treatment analyses consists of performing the selected analysis(es) identified during pre-acceptance and/or receiving of the waste. In addition, a portion of a pre-treatment sample may be stabilized, then analyzed to demonstrate that the waste can be successfully stabilized to meet the applicable LDR treatment standards and/or to establish the mix ratio of reagent(s) to waste that will be used. An evaluation is performed on the pre-treatment sample, if a previously developed and established mix ratio has not previously been identified and demonstrated for use with this waste. Table 4 provides the minimum pre-treatment analyses for waste to be stabilized.

In-process analyses consists of verifying the size of reduced waste (e.g., waste leaving TP-1) and verifying the moisture percent of dried waste (e.g., waste leaving TP-8). Table 7 provides the minimum in-process analyses for waste to be stabilized.

Post-treatment analyses confirms that the stabilized waste passes the applicable treatment standards (i.e., total concentration) by collecting a representative sample of the stabilized waste and performing the appropriate analyses, as needed. Table 8 identifies the various post-treatment was evaluations associated with treatment line 100.

5.1.2 Treatment Line description

Treatment Line 100. Treatment line 100 will treat waste stream 100 using the following equipment and systems: 1) size-reduction and screening; 2) dryer; 3) low volume solids mixing (stabilization); and, 4) high volume solids mixing. Each of these systems is described hereinafter:

Size Reduction and Screening System (designated as TP-01). This system will have a container dumb/elevator, a transfer conveyor and intake hopper, an integrated shredder and screening device, and a transportable in-process container (TIC) filling station. The system will be designed to reduce the size of the input solid wastes to approximately 3/8-in. Boxes and drums will be placed in the dumper/elevator which will unload the waste contents into the hopper located at the conveyor intake. The conveyor transfers the waste to the shredder intake housing. The shredder will granulate the waste to the desired size. A screen located beneath the shredder ensures that all wastes are granulated to the desired size. The granulated waste will flow to a TIC placed in the filling station under the shredder. When full, the TIC will be transported to one of the two mixing systems (designated as TT-01 and TT-02) for stabilization. All operations conducted by the size reduction and screening system will be confined within air-tight enclosures or ventilation hoods. The vents from the enclosures and hoods will be sent to a dust collection bag-house and then to the stabilization process vent system. This process vent system will be equipped with carbon filters for treatment of fugitive organics generated during size reduction and screening operations.

Dryer System (designated as TP-08). This system will be equipped with an enclosure, a hot air recirculation line, and an exhaust treatment line. The system is designed to accept a B-25 box or six 55-gallon drums. The drying occurs at an average temperature of approximately 250^0 F. The moisture in the waste will be removed in the dryer system by placing a container in the enclosure, removing container cap, and closing the enclosure door. Next, the dryer system hot air recirculation line will be turned on and hot air will be allowed to heat the container and evaporate water contained in the drum. To remove the moisture accumulated in the dryer enclosure, a small side stream from the air recirculation line will be removed by an exhaust fan and passed through an air condenser. Air discharged from the condenser will be discharged to the STB process vent system. This system will treat the dryer exhaust by charcoal filtration and discharge the cleaned exhaust to the building confinement system which further treats the air by HEPA/charcoal filtration technique. As the drying cycle continues, the dryness level of the waste will be measured by detecting the moisture content in the exhaust line. When, the waste in the container reaches the desired dryness, the drying system will be turned-off and the enclosure will be allowed to cool off. Next, the enclosure door will be opened and the containers will be tested if needed, re-capped, and transported to the next designated treatment system.

High-Capacity Mixing system (designated as TT-01). The output solid waste from the size reduction/screening and the dryer systems will be stabilized in the high-capacity mixing system to meet the LDR treatment standards. This stabilization is performed by mixing solid waste with reagents, such

as cement, or fly ash, in either a high-capacity or a low-capacity mixing system. Prior to stabilization, treatability tests will be performed to establish a formulation that ensures the stabilization process will reduce the leachability of toxic and hazardous contaminants in the final product to a level that meets the LDR requirements. After the initial preparation, solid wastes requiring stabilization will be placed in a transportable in-process container (TIC) and weighed. An appropriate amount of reagent, as determined by the pre-established formulation, will be prepared in the bulk reagent system and placed in another TIC. The TIC containing waste will be placed on top of a feeder that discharges the waste into the designated mixer. The TIC containing reagent will be placed on top of another feeder that also discharges the reagent into the designated mixer. When ready, the two feeders will be started to add the waste and the reagent to the mixer. Next, the mixer will be started to run for a set period of time. When mixing cycle is complete, the bottom discharge valve will be opened and the mixture will be discharged into a disposal container placed under the mixer. When a mixing batch or a campaign is complete, the mixer will be cleaned by introducing a pre-determined quantity of abrasive solids (gravel). The abrasive solids will remove material accumulated in the blades or around the mixer housing. When the cleaning cycle is complete, the abrasive solids are discharged on top of the stabilized waste in the disposal container. The mixture in the disposal container is allowed to cure. Next, the waste is checked for compliance with LDR standards and sent to WSB if it passes the inspection. Wastes not meeting the inspection are re-processed by sending it to the size reduction and screening unit.

Low-Capacity Mixing System (designated as TT-02). Both the high capacity and the low-capacity mixing systems use the same basic equipment and processing method for stabilizing solids, with the exception that the size of the mixer used in the low-capacity mixing system is smaller than that used in the high capacity system. The selection of a mixing system is made by the operator based on the overall work-load ate MWF and the quantity of waste to be processed in the given processing campaign or batch.

5.2 Treatment Line 200 (LIQUIDS/SLUDGE)

Treatment line 200 performs the following technology-based waste treatment processes.

Neutralization (NEUTR). A neutralization process pre-treats incoming waste that must be neutralized before stabilization. Neutralization is one of the deactivation (DEACT) technologies for corrosive wastes.

Carbon (CARBN). Absorption of non-metallic organics, argano-mettallics, and/or organic constituents on granulated or powdered carbon.

Chemical oxidation (CHOXD). A chemical oxidation process pre-treats incoming waste requiring chemical oxidation before stabilization.

Chemical reduction (CHRED). A chemical reduction process pre-treat incoming waste requiring chemical reduction before stabilization.

Deactivation (DEACT). Deactivation of water-reactive waste is accomplished by adding a deactivation agent.

Figure 5, provides a functional flow description for treatment line 200.

5.2.1 Sampling and Analysis Performed

Pre-treatment analyses: is the selected analysis(es) identified during pre-acceptance and/or receiving of the waste. Table 9 provides the minimum pre-treatment analyses for waste to be processed in line 200.

In-process analyses: verifies that chemically treated wastes (e.g., waste leaving TP-4), are compatible before consolidation (e.g., waste entering TP-9), and verifies the moisture percent of dried waste (e.g., waste leaving TP-8). In addition, a portion of a consolidated waste and/or chemically treated waste may be sampled, stabilized, and then analyzed to demonstrate that the waste can be stabilized to meet the applicable LDR treatment standards and/or to establish the mix ratio of reagent(s) to waste used. Table 10 provides the minimum in-process analyses for line 200.

Post-treatment analyses confirms that the stabilized waste passes the applicable treatment standards (e.g., total concentration or TCLP) by collecting a representative sample of the stabilized waste and performing the appropriate TCLP analyses, as needed. Table 11 identifies the various post-treatment evaluations associated with treatment line 200.

5.2.2 Treatment Line Description

Treatment Line 200. This line treats stream 200 using the following systems: 1) liquid consolidation; 2) liquid treatment; 3) liquid holding; and, 4) in-container mixing (neutralization/stabilization).

Liquid Consolidation System (designates as TP-09). The liquid consolidation tank will be used for pre-treatment and treatment of liquids received in bottles and small containers, usually less than 5 gallons (i.e., labpacks). Chemical adjustments will be as per dangerous waste standards including NEUTR, CHOXD, CHRED or DEACT. Operations will include (1) receiving containers, (2) opening containers, (3) transferring liquid from small containers to a large container (i.e., consolidation), (4) chemically adjusting the waste, (5) stabilizing small quantity unique wastes; (6) rinsing containers and tools; and, (7) transferring the waste to outgoing TICs. The system will include a laboratory scale hood, a sink and bench scale laboratory tools and instruments. All operations will be conducted inside a hood which will be connected to the STB process vent system. The consolidated waste will be collected in TICs located under the hood. The chemical adjustments will include neutralization, chemical oxidation, chemical reduction or deactivation. Before starting any chemical adjustment in this system, all safety aspects of the operations including compatibility of the chemicals and compatibility with the material of construction of the receiving containers and processing equipment will be thoroughly examined and considered in the procedures. Waste streams that are not compatible will not be mixed but treated individually and stabilized under the hood using bench scale stabilization mixer. When the waste transfer and consolidation is complete, a small amount of rinse water will be added to rinse empty containers, the sink and the associated bench scale tools. The rinsate will be sent to the same container receiving the consolidated waste. Following completion of consolidation and treatment, the waste will be sent to other pretreatment or treatment units. The empty containers will be sent either to the empty container rinse system or to the containerized waste staging area for cleanliness inspection and release for re-use or disposal.

Liquid Treatment System (designated as TP-04). This system has two sets of 1200 gallon tanks with mixers, pumps, strainer/filters, piping, controls, and instrumentation needed to perform the specified filtration and chemical adjustments. The latter function, chemical adjustment, will be as per dangerous waste standards WAC 173-303-140 (40 CFR 268.40) including NEUTR, CHOXD, CHRED or DEACT. The system will receive liquid waste for treatment by neutralization, oxidization, reduction or deactivation. Other major operations conducted in treatment tank system will include receiving

incoming liquid waste, filtering the incoming or treated wastes, transferring the treated waste to a TIC for transport to other tank systems, and tank rinsing. Liquid waste will include shipped liquid waste and waste received from other treatment systems. One of the tanks serves to hold the in coming waste while the other provides the required treatment. Treated liquids from this tank system are pumped to TICs which will be sent either to the liquid holding system (TP-6) or to one of the stabilization systems (TT-1, TT-2 and TT-3). Solids bearing aqueous waste not having a listed waste codes may be sent to the dryer system (TP-8). The dryer will concentrate the waste to a level that will reduce the volume of the final stabilized waste. In this case the condensate from the dryer will be collected and sent to the holding tank system (TP-6) for polishing and re-use. After treatment, the tanks are rinsed. The rinsate is either mixed with the original waste in the tank or placed in a separate TIC to be processed in a batch.

Holding Tank System (designated at TP-6). The system consists of two tanks with mixers and discharge pumps including piping and valve manifolds, a granular activated carbon adsorber, an ion exchange unit, and an ultra-violet light ray (UV) oxidation unit. The carbon filtration in this system will be according to dangerous waste treatment standard CARBN while UV oxidation will be according to standard CHOXD. Operations conducted in this tank will include: (1) transferring incoming waste to the tank; (2) treating the waste by a combination of ion-exchange, carbon adsorption or UV oxidation; (3) transferring the treated waste to an outgoing TIC; (4) rinsing the tank system; and (5) discharging spent media out of the treatment units. Transfer of wastes from TICs to the tank will be performed under a negative vacuum pressure. The vent from the TIC and the tank will be collected and treated by the STB process vent system. A candidate waste stream for treatment by this tank is metal bearing wastewater streams with less than 1% organic as specified in WAC 173-303-140 (40 CFR 268.3). Other candidate input waste streams are condensate from the dryer system or high purity rinse water from onsite equipment flushing operations. The holding tank system is designed to treat high purity characteristics wastes requiring treatment for removal of dissolved metals or organic compounds (e.g., hydrocarbons, alcohol, ketones, volatile organic compounds, and/or aromatics). The removal level will be such that the treated liquid waste will meet the LDR concentration limits. Hence, after treatment the liquid wastes will be re-used as rinsing water or as an additive for the stabilization process. Treatment of a liquid stream bearing listed waste code/s will complicate the re-sue and recycling options. Therefore, treatment of listed wastes by this system will be minimized to the extents possible. Any listed wastes treated by this system which is not suitable for re-use will be stabilized in the in-container stabilization system. The three treatment units (carbon filters, ion-exchange and UV oxidation) will be installed such that they can be used individually or in series for treating a given waste stream. Waste streams containing low concentrations of dissolved organics will be treated by using either carbon adsorption or UV oxidation (or both) trains. Waste streams containing low concentrations of dissolved metals will be treated by the ion exchange unit. If both organics and dissolved metals are present in a liquid waste stream, organics will be removed first, followed by dissolved metals removal step. Treating waste will begin by transferring incoming waste from an incoming TIC to one of the two holding tanks. Procedure used for this transfer operation will be the same as that described for the treatment tank system (TP-4) above. When all of the waste is transferred to the tank, the tank discharge valve manifolds will be secured such that liquid will flow from the input waste tank through the pumps and the desired treatment unit and into the second holding tank. When ready the tank mixer and discharge pump will be turned on. Liquid waste flows from the first holding tank to the selected treatment unit/s and back to the second holding tank. The process is repeated until the dissolved organic and metal concentration levels, as periodically measured by sampling and analysis, will meet the LDR concentration requirements. Then, the treatment system in turned off and the treated liquid will be kept in the holding tank until needed for re-use in rinsing or stabilization. When the treated water must be transferred to other system for re-use, the tank contents will be discharged to a TIC using the same procedure described for the treatment tanks system (TP-4), above. At the end of each waste treatment batch, rinse water will be used to flush the previous wastes out of the tanks, equipment and piping. The rinse water will be

collected in a TIC and sent to the in-container mixing system for stabilization. To remove the spent media (carbon, ion exchange resins), an empty TIC container (suitable for use in-container stabilization ~~or feed to the GASVIT™ system~~) will be placed under the treatment unit discharge port. Next, the treatment unit discharge port valve manifold will be secured to drain the spent media into the TIC. If needed, the carbon, ion- exchange and UV oxidation units will be rinsed with water and the rinsate will be discharged to another TIC. The filled TIC containing spent media will be sent for final treatment ~~either~~ to the in-container stabilization system (TT-3) ~~or the GASVIT™~~ system. The filled TIC containing rinse water will be sent for stabilization to the in-container mixing system (TT-3).

In-Container Mixing System (designated as TT-3). This system will be used to provide stabilization processes (dangerous waste treatment standard, NEUTR and STABL) by mixing liquid, slurry, and solid wastes in a container that serves both as the mixing vessel and the final disposal container. Operations conducted by this system will include: (1) receive containerized waste from pretreatment tank systems, (2) receive stabilization reagents from the reagent storage tank system, (3) mix waste with reagents, (4) cap stabilized waste containers, and (5) transport filled containers to the containerized waste staging area for certification and shipping. The in-container stabilization system will use a mixer blade mounted on a vertical telescoping shaft. A drum loading flange will be provided to seal the container during stabilization and mixing operations. Vent from the container will be connected to the STB process vent system. Mixing is accomplished inside a mixing enclosure mounted to a steel frame. The system will be designed to mix waste with reagents either in 55-gallon drums or larger cylindrical containers. Batches of incoming solid, slurry or liquid waste, will be pre-treated in the container accordance with requirements established by the treatability tests. The mixing will be accomplished by placing the waste container under the mixing station, clamping down the containers, lowering the mixing blade and loading flange to mate and seal with the top of the container, feeding the desired reagent mixture to the container while the mixer is turned on and allowing the mixing to continue until the desired cycle mixing is complete. Next the mixer will be stopped and raised out of the container and the container will be capped and set aside for curing. Since an in-container concept is used, only the mixer blade will require rinsing. The mixer blade is cleaned by placing an empty drum in the mixing station, lowering the loading flange, clamping the container, turning on the mixer, and spraying water on the impeller. After cleaning is complete, the mixer is turned off, the clamps are released, the loading flange is raised, and the drum containing rinse water is removed from the mixing station. The drum containing rinsate is filled with waste and stabilized in the next waste stabilization campaign.

The Extraction System (designated as TP-10): The function of the extraction system TP-10 is to decant/separate liquids from solid wastes and also perform the treatment activities of solvent extraction, chemical oxidation, chemical reduction, deactivation, precipitation or washing/rinsing. Operations conducted by this system include: receiving containerized waste, receiving various reagents, separating liquids from the solid waste via decanting/pumping, washing the solids with appropriate solutions, grouting the washed solids, closing the waste containers and transporting the filled containers to a waste storage area. For washing operations, this system is used to decant/pump out liquids followed by washing and rinsing of solids and decanting/pumping out of the solutions. The treated or washed solids are placed into containers which are grouted (or undergo further treatment), capped and transported a containerized waste storage or inspected for shipment off-site. The extraction system uses two electric mixer units mounted on to mobile steel frames equipped with pumps, instrumentation, and controls. . After a waste containing a mixture of solids and liquids is received in the mixer, decanting is accomplished by tilting the extraction unit to a position angled from the vertical. A screen may be secured to the mixer opening to allow the liquids to drain into a container while the solids are retained inside the mixer.

Batches of incoming solid/liquid TSCA-regulated PCB waste (DU chips or metal turnings, for example), are treated by washing the solids in the two extraction mixers. Before washing, liquids will be decanted off of the solids and tested for PCB content, containerized and shipped off-site for disposal as appropriate. Following washing and the decanting off of the first washing solution, stored on-site until the solids are transferred to the second extraction mixer for the second washing step. [One mixer is dedicated for the first wash or high concentrations of PCBs. The second mixer is dedicated for the second wash, or low concentrations of PCBs.] The wash liquids are tested for PCB content and either recycled within the system for use again or containerized and shipped off-site for appropriate disposal. During the washing/rinsing activities when the mixer is agitating the solid/liquid mixture, a lid is closed over the opening of the mixer, preventing emissions.

If the treated waste is a pyrophoric material, the material may be covered in mineral oil before further treatment. The mineral oil will later be removed and retained for further use as practicable and the treated waste may be further treated. If grouting of the wastes is going to occur, the solids will be transferred to a final disposal container already containing grout on the bottom. A grout mixture will then be poured over the solids. After allowing the grout in the container to be cured, the container is capped and transported to a waste container storage area for inspection for shipment off-site. TP-10 may be used to process TSCA-regulated wastes. Non-TSCA-regulated PCB wastes and non-PCB wastes can also undergo treatment in these two extraction mixers. If TSCA-regulated wastes are treated in the mixers, they will be cleaned by either triple rinsing or double wash/rinse procedure prior to processing non-TSCA wastes.

Evaporation System (designated as TP-16): This system will be used to reduce the volume of liquid hazardous waste and to consolidate hazardous constituents (e.g. metals) into residues for additional treatment at the MWF or for disposal off-site. Operations conducted by this system include unoading incoming liquid hazardous wastewater from tanker trucks or containers unto one of the four storage tanks; feeding the liquid into the evaporators; and collecting the residues in the brine tank. The evaporation system (ie. Five tanks, two evaporators, and ancillary equipment) will be locaed in the MWTH building. No corrosive (D002) or TSCA-regulated PCB wastes will be accepted for evaporation treatment. Furthermore, VOCs will be restricted to no more than 10% by weight.

5.3 Treatment Line 300 (METAL/LEAD DEBRIS)

Treatment line 300 is used to process metal debris and bulk lead. Figure 6 provides a functional flow description for treatment line 300.

5.3.1 Sampling and Analysis Performed

Pre-treatment analyses performs the selected analysis(es) identified during pre-acceptance and/or receiving of the waste. Table 12 provides the minimum pre-treatment analyses for line 300.

In-process analyses verifies the size of reduced debris (e.g., debris leaving TP-2). Table 13 provides the minimum in-process analyses for line 300.

Post-treatment analyses confirms that the treated debris passes the applicable treatment standards (e.g., visual inspection). Table 14 identifies the various post-treatment was evaluations associated with treatment line 300.

5.3.2 Treatment Line Description

Treatment Line 300. This line treats waste streams 301 through 355 using the following systems: 1) cutting and sheering, 2) physical extraction, 3) polymer mixing (macro-encapsulation/stabilization); and, 4) container rinse.

Cutting and Shearing System (designated as TP-02). The cutting and shearing system will have work benches, tables, an electric saw, a shear cutter and hand tools such as pneumatic, air or electric operated grinders, drills, hammers, chisels, and cutting torches. All operations will be conducted under a portable hood which will be provided for this system. The function of cutting and shearing system will be to reduce large waste objects to a size suitable for further processing in other pre-treatment and treatment systems. Objects that may require shearing include metal, wood, plastic and construction debris such as discarded tanks piping, and paneling. Containers of cemented wastes that do not pass the required LDR standards will also be brought to this room, their container metal skin will be cut and removed, and the cemented waste will be sent to the size reduction and screening system (TP-01) for re-shredding. Waste requiring size reduction will be brought to the cutting and shearing area in TICs or in their original containers. They will be manually removed from the incoming containers and placed in an appropriate size reduction tool table. The size reduction operation will be performed inside enclosures or under vent hoods. The vent lines will be connected to the stabilization process vent system. The size reduced waste will be placed in a TIC which will be transported to and appropriate pre-treatment and treatment system.

Mercury amalgamation (AMLGM) is another treatment process being performed inside of TP-02 or by using a glovebox with the glovebox connected to the process ventilation connection inside of TP-02. It includes a bench-top catch pan, a tumbler, small containers for mixing and various amalgamation and stabilization reagents. Waste contaminated with >260 ppm total elemental mercury is stored in the WSB or SB-02 cabinets and then brought to this unit for amalgamation of the elemental mercury. The waste is mixed with an amalgamating reagent and then with supplemental amalgamation and/or stabilization reagents. The amalgamated mercury is then analyzed by TCLP to verify that it meets universal treatment standards (UTS) prior to shipment offsite for disposal. The treated waste is then stored in the WSB until compliance with TS is confirmed and shipment to a disposal facility can be arranged.

Physical Extraction System (designated as TT-05). This system will be provided to treat bulk metal and non-metal solids by physical extraction method which is a treatment standard accepted by EPA for wastes classified a "debris." The physical extraction system will consist of a decontamination enclosure, a work table, a turntable/trolley assembly, abrasive media blasting pump and piping, recirculation and filtration unit and the related accessories. The physical extraction process will remove surface contamination. The extraction process will be conducted inside the booth and the booth vent will be connected to the STB process vent system. The system will primarily use CO_2 pellet (dry-ice) abrasive blasting media but other media such as silica or alumina beads will be used depending on the nature of contamination. Treated waste will be placed in containers and sent to the containerized waste staging area for final inspection and certification. Abrasive media and contaminants together with rinse spray water will be collected in a sump in the booth. The rinse water will be recycled through a media filter. The solids and water will be separated. Water will be returned to the spray system. Filtered solids will be collected in a TIC. When full, the TIC will be sent to the in-container mixing tank system (TT-3) for treatment. Excess liquid produced by the extraction process operation is transferred to the in-container stabilization system (TT-3).

Polymer Mixing System (designated as TT-04). The polymer mixing system is used in two modes, stabilization and macro-encapsulation. In the stabilization mode, the system is used to stabilize (dangerous waste treatment standard, STABL) wastes, including nitrated salts, that cannot be stabilized

by pozzolanic or grout type stabilization. In the macro-encapsulation mode, the system will be used for macroencapsulation (dangerous waste treatment standard, MA~~R~~CRO) of bulk lead waste stream. The system will consist of a polymer feeder, a waste feeder, a bulk material blender, an extruder, a filing station enclosure, a container turntable and associated equipment. Operations performed by this system for a stabilization mode will include: (1) receive size-reduced waste from pre-treatment tanks; (2) receive reagents and polymer from the reagent storage system; (3) mix reagents, polymer, and waste in a blender; (4) feed the blend to the plastic extruder to produce a stabilized waste form; (5) discharge waste into a disposal container; and, (6) when the container is full, stop the extruder, allow the container to cool down, cap the container and send it to the containerized waste staging area for final inspection and certification. Typical operations involving a macro-encapsulation mode will include: (1) receive bulk lead material in a container and place it on top of the turntable in the enclosed filling station under the extruder; (2) receive a plastic pellet container and place it on the pellet feeder; (3) feed the pellets to the extruder and allow molten plastic to flow into the container and cover the bulk lead surface while the cart is rotating; (4) when the lead is macro-encapsulated, stop the extruder, allow the container to cool down, cap the container and sent it to the containerized waste staging area for final inspection and certification. Vent form the filling station will be connected to the STB process vent system.

Container Rinse System (designated as TT-06). The container rinse system will be provided to clean and triple rinse empty containers to comply with WAC 173-303-160 and 40 CFR 761.79 for container re-use. A waste container is empty when no more than one inch of waste remains at the bottom of the container, or the volume of waste remaining is equal to or less than three percent of the container's total capacity. For containers that held acutely toxic waste, as defined by WAC 173-303-040, toxic EHW as defined by WAC 173-303-100, will require triple rinsing. Note: PCB empty containers will not be cleaned by this system. ~~It will be rinsed at the GVB and the rinsate will be fed to the GASVIT™ liquid feeder.~~ Non-reusable drums will also be cleaned in this area and discarded. The system will consist of a large container rinse enclosure and a drum wash enclosure. The insides, and if needed, the outside of containers will be cleaned as necessary to meet the regulatory definition for a clean container. The system is designed to wash drums, intermediate bulk containers (IBC) containers and B-25 boxes. The drum and container washing units will be equipped with a high-pressure hot-water spray system, vacuum operated siphon, and a sump. The rinse operations will be contained inside an atmosphere-controlled enclosure. The contents of the waste water sumps will be pumped into a TIC and transported to the liquid waste treatment system for treatment.

5.4 Treatment Line 400 (HETEROGENEOUS SOLIDS/DEBRIS)

Treatment line 400 is used for heterogeneous debris. Figure 7 provides a functional flow description for treatment line 400.

5.4.1 Sampling and Analysis Performed

Pre-treatment analyses performs the selected analysis(es) identified during pre-acceptance and/or receiving of the waste. Table 15 provides the minimum pre-treatment analyses for line 400.

In-process analyses: Table 16 provides the minimum in-process analyses for line 400.

Post-treatment analyses confirms that the treated debris passes the applicable treatment standards (e.g., visual inspection). Table 17 provides the minimum in-process analyses for line 400.

5.4.2 Treatment Line Description

Treatment Line 400. This line treats stream 400 using the following systems: 1) sorting; and, 2) compaction.

Sorting System (designated as TP-03). The sorting system will have a container dump mechanism, a feed conveyor and a sorting table. The waste handling area of the system will be covered either by an enclosure or a hood assembly. Vents from the hood will be sent to a dust collection baghouse and then to the stabilization process vent system for treatment. The sorting system will segregate heterogeneous and debris wastes into several sub-stream categories so that they can receive an appropriate pre-treatment or treatment step. Boxes and drums of wastes requiring segregation will be delivered to the system dumping mechanism by a forklift truck or a cart. The dumping mechanism will unload the containers and feed the waste into the feed conveyor. At the feed conveyor a visual inspection will be conducted and large objects and other items not requiring detailed sorting will be removed and placed in an appropriate TIC. Next, the feed conveyor will transfer the remaining objects to the sorting table. In a typical operation at the sorting table, the operators will manually remove the objects from the sorting table and place them into five sorting TICs according to the following categories: (1) debris waste requiring super-compaction and immobilization in the compaction system (TP-7); (2) bulk lead requiring macro-encapsulation in the polymer mixing system (TT-4); and (3) metal debris requiring surface decontamination in the physical extraction system (TT-5).~~; and, (5) waste requiring GASVIT™ treatment in GVB~~. Other non-routine waste types that may be sorted, if found during the sorting operations, are: (1) wastes requiring stabilization in one of the stabilization systems (TT-1, TT-2, TT-3, or TT-4); (2) waste not compatible with any of the MWF treatment systems and that will require repackaging for return to the generator. Sorted waste will be placed in plastic bags inside the TICs adjacent to the turntable. When full, each plastic bag will be closed and tied. ~~Waste streams requiring GASVIT™ may be placed inside cardboard canisters suitable for processing by the GASVIT™ system batch feeders.~~ The TIC containing bags of waste will be transported to the designated pre-treatment and treatment system by ~~either~~ a hand-operated forklift, power-assisted forklift, or manual cart.

Aerosol Can Puncturing Device (designated as TP-15)

As required by the WAP, all incoming waste shipments are required to undergo visual inspection. Table 1 of the WAP lists all wastes that PFNW-R is restricted to accept. One of these restricted wastes is, "Containers containing pressurized gases…" The reason why these containers are restricted is because PFNW-R did not have an adequate method of treating this waste. Aerosol cans are not expected to fall in to this category; therefore PFNW-R can accept and treat these types of waste. The aerosol can puncturing unit will be capable of treating aerosol cans up to three (3) inches in diameter.

Formatted: Line spacing: single

Compaction System (designated as TP-7) The system will include an in-drum compaction, a super-compaction, and a grouting tank/pump assembly. The main function of the system is to provide dangerous waste macro-encapsulation treatment standard for treatment of waste classified as "debris" in accordance with WAC 173-303-040. Transfer of wastes from open TICs to the in-drum compactor will be performed under a hooded area. The vent from the hood, the in-drum compactor and the super-compactor will be collected and treated by the STB process vent system. Operating steps to accomplish this function will be as per the following description. Debris wastes will be brought to the compaction area in a TIC. Drums containing debris that has already been compacted by the generator will be brought to the compaction area by a fork-lift truck. Debris will be removed from the TIC and placed in a 55-gallon drum placed under the in-drum compactor. The in-drum compactor will be turned on to compress the debris. The in-drum filling-compression cycle will be repeated several times until the drum is full. The filled drum will be capped and transported to the super-compaction area. When sufficient numbers of compacted drums are in hand, the super-compactor will be started. The drums will be placed in the super-compactor chamber one-by-one. The super-compactor will squeeze each

drum until the drum contents approach nearly their absolute density. Next, the squeezed drum (referred to as pucks) will be taken out of the super-compactor and placed inside an over-pack container (drum or a box). When the over-pack container is filled with sufficient number of pucks, a grout mixture will be prepared and poured into the over-pack container until the void spaces are filled. After allowing the grout in over-pack container to be cured, the container will be capped and sent to a containerized waste staging area (TS-1) for final inspection and certification.

5.5 Treatment Line 500 (~~ORGANIC LIQUIDS/SOLIDS GASVIT™~~HAZARDOUS WASTEWATER)

This system is a thermal treatment system that ~~provides equivalent treatment to the CMBST and INCIN technology-based treatment standards~~uses evaporators to reduce the water content of hazardous wastewater for subsequent treatment on-site in TT-02, TT-03, or disposed of off-site. Figure 8 provides a functional flow description for treatment line 500.

5.5.1 Sampling and Analysis Performed

Pre-treatment analyses performs the selected analysis(es) identified during pre-acceptance and/or receiving of the waste. Table ~~16~~ 18 provides the minimum pre-treatment analyses for line 500.

In-process analyses ~~collects samples during waste treatment to verify that permit conditions are met. Specific sampling locations and permit process parameters will be identified and established during the demonstration test. Table 19 provides the minimum in-process analyses for line 500.~~for hazardous wastewater evaporation process is not necessary for Treatment Line 500 as the evaporators are equipped with a PLC and operator interface panel. The panel displays operational information and alarms.

Post-treatment analyses ~~confirms that the~~ quantifies the amount of dangerous waste constituents in the treatment residues (i.e.~~g., glass, and scrubber water~~evaporator residue). ~~pass the applicable treatment standards by collecting a representative sample of each treatment residue and performing the appropriate TCLP analyses.~~The amount determined by this analyses is used to determine the amounts of reagents used in the treatment recipe in TT-02 or TT-03. Based on waste codes, thermal treatment residuals will be analyzed for Underlying Hazardous Constituents identified in 40 CFR 268.48, Universal Treatment Standards. Table ~~20~~ 19 provides the minimum post-treatment analyses for line 500.

5.5.2 Treatment Line Description

Treatment Line 500. This line treats stream 500 using the ~~following systems: 1) feed preparation, 2) waste feed, 3) GASVIT™, and 4) secondary waste treatment~~evaporation system (TP-16).

The EVAPORATION SYSTEM (designated as TP-16): This system will be used to reduce the volume of the hazardous wastewaters and to consolidate hazardous constituents (e.g. metals) into residues for additional treatment at the MWF or for disposal off-site. Operations conducted by this system include unloading the incoming hazardous wastewaters from tanker trucks into one of the four storage tanks; feeding the wastewaters into the evaporators; and collecting the residues in one brine tank. The evaporation system (i.e. five (5) tanks, two (2) evaporators, and ancillary equipment) will be located in the MWTH building. No TSCA-regulated PCB wastes will be accepted for evaporation treatment. Containerized hazardous wastewaters will also be fed directly into the evaporator system. ~~**Feed Prep System (designated as GV-01).** This system has a hooded inspection station, a box sorting enclosure, a sorting table, and a shredder. The system receives waste containers including PCBs wastes, from outside of the GVB and prepares them for feeding into the GASVIT™ process~~

Formatted: Font: Not Bold

~~chamber. Another function of the waste is receiving and staging of PCB waste containers. First, waste containers are brought and placed under the inspection station where their cap is removed to allow visual inspection and sampling operations. After inspection, the containers are capped. Solid waste containers are sent either back to WSB for storage or to one of the two sorting units. Liquid waste containers are sent either back to WSB for storage or to the liquid feed unit. Liquid preparation operations encompassing liquid absorption and/or consolidation will be performed at the liquid feed unit HAZMAT enclosure. At the sorting units, solids wastes will be removed from the containers and fed to the sorting devices where solids requiring GASVIT™ treatment will be segregated from other wastes and placed either into: 1) a plastic container; 2) a cardboard canister; or, 3) sent to the shredder for size reduction. Any waste requiring shredding will be placed on a conveyor that feeds the waste into the shredder housing. The shredder reduces the waste size and discharges it into a plastic bag. The packaged plastic bags and canisters will be stored in the surge storage area for subsequent feed into the GASVIT™ process chamber. Solid wastes requiring macro-encapsulation or physical extraction will be segregated during sorting operations, placed inside TICs, and transported to an appropriate treatment line in STB.~~

~~Empty PCB containers will be decontaminated by taking them into the liquid feed system HAZMAT enclosure and rinsing them with an appropriate rinsing solution as required by 40 CFR 761.79. Empty containers which held dangerous waste will be sent to the empty container rinse system (see treatment line 300) for final cleaning and disposition as required by WAC 173-303-160.~~

~~**Feed System (designated as GV-02).** Feed subsystem introduces feed-stock and additives into the process chamber at a pre-determined feed rate. The following four different types of feeder are used: 1) a feed tank/pump assembly is used to feed liquid/sludge wastes; 2) a continuous screw feeder equipped with an airlock hopper assembly is used to introduce bagged solids; 3) a redundant set of batch feeder mechanisms are used to feed pre-packaged waste canisters; and, 4) glass former additives are metered into the continuous solids feeder by a gravimetric feeder which introduces the material into the continuous feeder and then into the process chamber. Bagged solids prepared in the feed preparation system will be placed in a feed conveyor that leads to the continuous feeder. This feeder introduces the material to the GASVIT™ process chamber at a controlled rate. Wastes packaged in canister cardboard will be fed to the process chamber via one of the two batch feeder units. Liquid waste is fist transferred from the incoming containers into a feed tank. This is performed by mounting a portable pump on the container and pumping the liquids from the container to the tank. For safety purposes, all liquid feed transfer operations are conducted inside a HAZMAT enclosure equipped with dedicated secondary containment and confinement systems. All incoming PCB contaminated liquid waste containers will be opened, inspected and transferred for GASVIT™ treatment in the HAZMAT enclosure.~~

~~**Process Chamber Subsystem (designated as GV-03).** The process chamber subsystem is the heart of the GASVIT™ system, where feed materials will be processed producing synthesis gas byproduct and a vitrified ceramic/glass and a metal product. Two sources of energy will be utilized to process the feed: a DC (direct current) arc plasma zone, and the AC (alternating current) joule-heated source. The DC arc plasma will be created by applying a DC potential across the three 6-in. diameter graphite arcing electrodes with a single electrode at one polarity and the other two electrodes at the opposite polarity. A stable plasma arc will then form between the molten bath and arcing electrodes. The second source of energy to the process chamber will be supplied directly to the molten glass via three graphite joule-heating electrodes submerged in the melt. A three-phase AC potential will be placed across the joule-heating electrodes which will result in current flow through the glass. The molten glass will act as a resistor such that power is supplied~~

~~directly to the molten glass. Organic constituents which are subjected to the DC plasma arc and joule heating will be pyrolized producing CO, H_2, HCl, and H_2S. Inorganic constituents will decompose, oxidize and dissolve into the molten glass phase. Any metals that may settle out of the molten glass phase will be removed as metal form.~~

~~**Product Handling Subsystem (designated as GV-04).** GASVIT™ system product handling subsystem will consist of a bottom freeze valve and an overflow drain valve attached to the process chamber. These two discharge points will be used to remove molten product out of the chamber. The molten product will be poured into disposal containers and allowed to cool to a solid form. The containers will be sent to the containerized waste staging system (TS-1) for final inspection and certification. After certification, the containers will be sent to WSB for storage.~~

~~**Syngas Processing (designated as GV-05, 06 and 07).** The syngas processing subsystems will employ three process stages to remove metal vapor and acid gas impurities in the syngas and convert the purified syngas to a stable form (i.e., water and carbon dioxide). The first processing stage will be a high temperature filter. When used, this filter will take out solid particulate leaving the process chamber. The second stage will consist of a scrubbing train, a mist eliminator, primary HEPA filter banks and induced draft fans. This train will remove acid gases, metal vapors and particulate and will discharge the gas into the third stage syngas processing subsystem. The treated syngas will meet the dangerous waste and TSCA standards for destruction at the second stage process unit discharge point. Hence, the gas entering the third stage will be nearly clean. The third stage will have a converter unit and will oxidize the syngas into a stable form of water and carbon dioxide. The exhaust from the converter will be discharged into the GVB confinement system (ventilation) equipped with HEPA/charcoal filtration units. GVB confinement system exhaust will be monitored for radiation before it is released to the atmosphere.~~

~~**Syngas Sampling Subsystem (designated as GV-08).** This subsystem will extract a continuous stream of syngas which will be analyzed for CO and CO_2. Signals from the continuous sampler will be used to control the rate of reducing gas addition with respect to the feed rate of organic material.~~

~~**Main Process Control Subsystem (designated as GV-10).** This subsystem ensures compliance with the dangerous waste/TSCA operating limits imposed on feed rate control and automatic waste feed cut-off (AWFCO) requirements. Centralized computer controls and PLC along with local instruments will be provided to implement the controls.~~

~~**Secondary Waste Treatment Subsystem (designated as GV-11).** Scrubber secondary waste is collected in a tank and processed through an evaporator unit. The distillate from the evaporator is recycled back to the scrubber for reuse. The concentrates from the evaporator are filled into a drum and sent to the stabilization building where it is stabilized and sent to burial sites for disposal.~~

~~**Caustic Addition (designated as GV-12).** This subsystem includes a bulk storage tank which receives concentrated bulk caustic from incoming tank truck or bulk containers. Bulk caustic is pumped to a day tank where it is diluted and fed to the scrubber units.~~

5.6 STORAGE

Containerized Waste Staging Area (STB Rooms 2 and 4). The containerized waste staging area in STB will have two rooms and will be equipped with storage racks, a vent hooded inspection

station, bar-code sensors and a computer terminal connected to the plant inventory and record management computer system. Containerized dangerous waste will be off-loaded in the yard by a fork-lift ~~truck~~ and sent to the STB containerized waste staging room where they will be inspected for acceptance. Containers will be opened either under the vent hood or will be taken to the inspection room (room 4). Inspections will involve maintaining negative ventilation in the hooded area or in the room, removing the container cap, conducting a visual inspection and, if necessary, obtaining a sample from the waste. If the containers are formally accepted after inspection, they will be capped and transported by a fork-lift ~~truck~~ to WSB for storage. If additional time is required before a container is formally accepted, it will be capped and taken to an area in TS-1 or in WSB where it will be delineated by a chain with a sign indicating "segregated container" storage area. When the waste container is formally accepted, the chain will be removed, or the container will be transported to other areas of WSB. If acceptance process exceeds more than 30 calendar days after the start of container verification, the container will be moved to the "container reject" cabinets. When a container is scheduled for treatment, the fork lift truck will transport it from WSB either directly to the designated treatment system or to STB containerized waste staging area for pre-sorting and transfer operations. Transfer operations will be accomplished under the hood or in ~~r~~Room 4, inspection room. Transfer operations may include removing the waste over-pack material and transferring waste objects from containers into TICs, or removing large objects from a container and placing them in a TIC. When a transfer operation is complete, TICs containing wastes will capped and be sent to the designated treatment system. All treated wastes will be packaged and brought back to STB containerized waste staging area (room 2) for final inspection and certification. When final inspection and certification is completed, the fork lift will transport the treated waste containers back to WSB.

Bulk Waste Staging Area (STB Room 3). The bulk waste staging area in STB will have one room that is maintained under negative pressure by the process vent system. The bar-code sensors and the computer terminal located in the containerized waste staging area will be shared by bulk waste staging area during inspections involving access to the plant inventory and record management computer system. Bulk solid dangerous waste containers (ISO container), boxes and ICBs will be handled in this room. Containers will be off-loaded in the yard by a fork-lift truck and sent to STB where it will be inspected for acceptance in the bulk waste staging area. In a typical operation, boxes and IBC containers will be taken inside the room. ISO containers (20 and 40-ft) will be placed outside the ~~r~~Room 3 truck entrance gate and a flexible boot seal will be mounted around the ISO container access door and the room 3 access roll-up door. Before opening the 40-ft ISO container door, all other ~~r~~Room 3 access doors will be closed to allow establishing a negative ventilation pressure in the work area. Inspections of containers will involve maintaining negative ventilation in the area, opening container, doors or caps, conducting a visual inspection and, if necessary, obtaining a sample from the waste. If the bulk containers is formally accepted after inspection, its door will be closed and transported by a fork-lift truck to WSB for storage. If additional time is required before a container is formally accepted, the area where the container is stored will be delineated by a chain with a sign indicating "segregated container" storage area. When the waste container is formally accepted, the chain will be removed. If acceptance process exceeds more than 30 calendar days after the formal receipt, the container will be moved to WBS and will be placed in an area delineated by a chain (or rope) with a sign indicating "container reject". Area. Also, any container that is rejected at any time during the operations, it will be kept in a chained area designated as "container reject" in the WSB. When a container is scheduled for treatment, the fork-lift ~~truck~~ will transport it from WSB to the bulk staging room for pre-sorting and transfer operations. Transfer operations will include removing waste objects from the container and transferring them to a TIC. As with the inspection operations, the transfer operations will be conducted when a negative air pressure is established in the work areas. When a transfer

operation is complete, TICs containing wastes will be sent to the designated treatment system.

~~**Solids Staging Area (GVB Room 3).** Solid wastes contaminated with PCBs will be staged in the staging area located in GVB room 1. After staging, PCB contaminated solids will be repackaged into bags and cardboard canisters. The repackaged bags and canisters will be placed in the surge storage area designated as GVB room 3. GVB room 1 has a hooded inspection station, bar-code sensors and a computer terminal connected to the plant inventory and record management computer system. The hooded station will be maintained under negative pressure by the GVB process vent system. PCB containerized solid waste will be off-loaded by a fork-lift and brought to GVB for inspection and confirmation prior to formal acceptance. Containers with PCB contaminated solid waste will be placed under the inspection hood in GVB and their cap will be removed to perform a visual inspection and related activities, such as sampling. If the containers are formally accepted after inspection, they will be capped and transported by a fork-lift truck to WSB for storage. If additional time is required before a container is formally accepted, it will be taken to an area in WSB delineated by a chain with a sign indicating "PCB segregated container" storage area. When a PCB waste container is formally accepted, the chain will be removed, or the container will be transported to other areas of WSB designated for PCB waste storage. If acceptance process takes more than 30 calendar days after the formal receipt, then the PCB container will be moved to the "PCB container reject" cabinets in WSB room 4.~~

~~**HAZMAT Enclosure (GVB Room 4).** Dangerous waste and/or PCB contaminated liquids waste containers requiring GASVIT™ treatment will be staged in the HAZMAT enclosure, designated as GVB room 4, in GVB. The enclosure will have a hooded inspection station, bar-code sensors and a computer terminal connected to the plant inventory and record management computer system. The hooded station in the HAZMAT enclosure will be maintained under negative pressure by the GVB process vent system. Liquid waste containers will be off-loaded by a forklift and brought to HAZMAT enclosure for inspection and confirmation prior to formal acceptance. Containers will be placed under the inspection hood, and their cap will be removed to perform a visual inspection. Other inspection activities, such as sampling, will also be performed, as necessary. If the containers are formally accepted after inspection, they will be capped and transported by a forklift to WSB for storage. If additional time is required before a container is formally accepted, it will be taken to an area in WSB delineated by a chain with a sign indicating "PCB segregated container" storage area. When a PCB waste container is formally accepted, the chain will be removed, or the container will be transported to other areas of WSB designated for PCB waste storage. If acceptance process takes more than 30 calendar days after the formal receipt, then the PCB container will be moved to the "PCB container reject" cabinets in WSB.~~

Waste Storage Building (WSB). WSB will store both dangerous waste and PCB contaminated waste containers. It will have four rooms, cabinets and racks designed to store various sizes of small containers, drums, B-25 boxes, ICBs (totes), and ISO containers (sea-vans). Incoming dangerous waste containers will be stored in ~~the r~~Room 1, raw waste storage area, in north side of the building. Incoming dangerous waste containers with reactive, corrosive, or ignitable hazards classifications will be stored in specially designed cabinets and racks placed under a covered storage pad, room 4, which is contiguous to WSB. PCB contaminated wastes will also be stored in specially designed cabinets and racks placed in the covered storage pad. The cabinets will be equipped with proper OSHA safety equipment, secondary containment, and NFPA approved fire protection systems. The center portion of WSB will have two identical rooms (~~r~~Rooms 2 & 3) and will be used for storage of drums and boxes containing treated solid wastes. Material handling will primarily be accomplished by fork-lift ~~trucks~~. Storage racks and cabinets used for storage of reactive, ignitable and corrosive wastes will be equipped with proper OSHA safety equipment,

secondary containment, and ~~National Fire Protection Agency (~~NFPA~~)~~ approved fire protection systems. Other waste types will be either stored on the WSB floor areas or will be placed in racks. Ancillary equipment and structures provided for WSB will include, material handling and racks system (designated as WS-1); ventilation & heating system (designated as WS-2); electrical system (designated as WS-3); secondary containment system (designated as WS-4); storage pad foundation (designated as WS-5); and, covered building foundation and structure (designated as WS-6).

In Process Surge Storage. In addition to the staging and storage units described above, small quantities of in-process will be stored wastes in their original containers or TICs near the pre-treatment or treatment units for a short period of time (usually less than 7 days).

Rejected Container Storage Provisions. The MWF will include the following three different areas for storage of rejected containers. Containers will be kept in the reject areas until the resolution process is complete and the containers are either formally accepted or rejected and loaded into vehicles for off-site shipments.

Container Reject Storage in STB Room 2. Any containerized dangerous waste in drums, B25 boxes or IBCs that is rejected during waste inspection, pre-treatment and treatment operations will be taken to the "container reject" cabinets located in the STB room 2. Rejected containers stored in this area will include those having a corrosive, reactive or ignitable hazard classification. Storage cabinets used for storage of corrosive, reactive, ignitable and corrosive wastes will be equipped with proper OSHA safety equipment, secondary containment, and NFPA approved fire protection systems.

Container Reject Storage in WSB. Any waste container (drum, IBC, B-25 box or ISO) that is not corrosion, ignitable, or reactive and which is rejected during waste inspection, pre-treatment and treatment operations may be taken to WSB room 1. A chain marked with "container reject" will be installed around the rejected bulk container.

PCB Container Reject Storage in WSB room 4. Any PCB waste container that is rejected during waste inspection, pre-treatment and treatment operations will be taken to the designated PCB container reject storage cabinet in WSB room 4.

6.0 REQUIRED CERTIFICATIONS AND NOTIFICATIONS

MWF provides the following notifications and certifications for treated waste:

Treated Waste Forms	Notification, Certification and Recordkeeping Requirements
LDR waste and treatment residue	Notice includes: EPA hazardous waste number; Constituents of concern for certain wastes; Treatability group; Subcategory; Manifest number; Waste analysis data (when available);. Certification in accordance with §268.7(b)(I), (ii), or (iii) stating that the waste or treatment residue has been treated in compliance with the applicable treatment standards and prohibitions.
Debris excluded from the definition of hazardous waste under §261.3(f).	Notices include: Name and address of facility receiving debris; EPA hazardous waste number and description of hazardous debris as initially generated; Technology used to treat the debris (Table 1 of §268.45).
Debris is treated using one of the extraction technologies in Table 1 of §268.45 and is thus excluded from the definition of hazardous waste under §261.3(f)(1)	Recordkeeping in accordance with §268.7(d)(3)(I) and (iii). Certification for each shipment of compliance with applicable treatment standards in accordance with §268.7(d)(3)(iii).

This page left intentionally blank.

Treated waste	Notification, certification and Recordkeeping Requirements
Waste and treatment residue from TSCA regulated waste (PCBs)	Notice includes: The identity of the disposal facility, by name, address, and EPA ID number; The identity of the PCB waste affected by the Certification of Disposal including reference to manifest number for shipment; A statement certifying the fact of disposal of the identified PCB waste, including the date(s) of disposal, and identifying the disposal process used; and A certification as defined by §761.3
Waste or treatment residue which no longer exhibits hazardous characteristics under §268.9(d)	Notice includes: Name and address of facility receiving the waste; EPA hazardous waste number and description of hazardous debris as initially generated; Treatability group; Subcategory; UHCs; certification accordance with §268.7(b)(5).

This page left intentionally blank.

Table 1

Waste Restricted from MWF[1]

Restricted Waste	Rational
Forbidden explosives as defined by §173.51, or Class A explosives as defined by §173.53. or Class B explosives as defined by §173.88 (WAC 173-303-090(7)(a)(viii)).	No treatment capability for forbidden, Class A or B explosives.
Waste carrying a waste code not listed in the Part A Application	Regulatory Restriction
Waste classified as explosive or shock sensitive as defined by WAC 173-303-090 (7)(a)*vi)-(viii)	No management capability for these waste types.
Waste classified as dioxin waste (F020-F023 and F026-F028)	Regulatory Restriction
Containers holding a containerized gas at pressures greater that 25 psi[2 and 3], or larger than 18"[2].	No treatment capability for containers of containerized gas above 25 psi[2 and 3], or larger than 18".
Waste that would cause the MFW to exceed the possession requirements listed in the MWF radioactive material license. (RML #WN-I0508-1)	MWF cannot exceed the possession limits stipulated in the MWF radioactive materials license.
Liquid waste received in greater than 55-gallon containers with a flash point less-than 100 °F	No storage capability for these waste types

[1]If it is determined that a waste listed on this table is received, the waste may be stored separately in the waste storage building until arrangements are completed to return the waste to the generator or to forward the waste to a facility authorized and capable to receive the waste.
[2]These values are established from the manufacture specifications of the containerized gas treatment equipment.
[3] Based upon the State of Washington's Focus on Aerosol Can Management guidance document (Doc. No. 07-04-005, dated April 2007, revised 11/2007), Ecology does not regulate empty aerosol cans as dangerous waste. This document provides two options for managing cans with dangerous waste contents: puncture and drain on-site or send to a permitted TSDF. the practice of puncturing aerosol cans as a form of mixed waste treatment is allowed.

This page left intentionally blank.

Table 2A

Line 100 – Solids/Debris

Process Tolerance Limits

Process Unit	Limits	Rationale
Size Reduction and Screening (TP-01)	No metal debris, plastic films/sheets, cables, ropes, reinforced concrete[1].	Potential for system to jam.
	No waste that is incompatible with equipment.	Safety and to prevent degradation of equipment.
	No waste with a pH≤2 or a pH≥12.5.	Regulatory restriction and to prevent degradation of equipment. (WAC 173-303-140)
	No waste with a flash point less than 100° F.	Safety.
	No waste that contains TSCA regulated PCBs or waste designated as WPCB as defined by WAC 173-303-9904.	Regulatory requirement. (WAC 173-303-071(3)(k))
	No waste that is not amenable for conveyance into the size reduction and screening units.	Treatment performance.
	No waste with greater than 10 percent total organic carbon if waste is to be stabilized.	Safety and regulatory requirement. (WAC 173-303-140)
	No ignitable (D001), corrosive (D002), or reactive (D003) waste.	Safety
	No high mercury waste (i.e. ≥ 260 ppm Hg)	Regulatory requirement (WAC 173-303-40 [§268.40])

This page left intentionally blank.

Table 2A

Line 100 – Solids/Debris

Process Tolerance Limits

Process Unit	Limits	Rationale
Dryer (TP-08)	No waste that contains TSCA regulated PCBs or waste designated as WPCB as defined by WAC 173-303-9904.	Regulatory requirement. (WAC 173-303-071(3)(k))
	No waste with a flash point less than 100° F.	Safety.
	No ignitable (D001), corrosive (D002), or reactive (D003) waste	Safety.
	No high mercury waste (i.e., ≥ 260 ppm Hg)	Regulatory requirement (WAC 173-303-140 [40 CFR 268.40])

This page left intentionally blank.

Table 2A

Line 100 – Solids/Debris

Process Tolerance Limits

Process Unit	Limits	Rationale
High Capacity Mixing (TT-01)	No waste with greater than 10 percent total organic carbon if waste is to be stabilized.	Safety and regulatory requirement. (WAC 173-303-140)
	No waste with a pH≤2 or a pH≥12.5	Regulatory restriction and to prevent degradation of equipment.(WAC 173-303-140)
	No waste with a flash point less than 100° F.	Safety.
	No waste that is incompatible with feeding and mixing equipment and reagents.	Safety and to prevent acid attack on equipment.
	No waste that is not able to meet applicable land disposal requirements after stabilization using the prescribed stabilization recipe.	Process control and regulatory requirement. (WAC 173-303-140)
	No ignitable (D001), corrosive (D002), or reactive (D003) waste	Safety.
	No high mercury waste (i.e., ≥ 260 ppm Hg)	Regulatory requirement (WAC 173-303-140 [§268.40])

This page left intentionally blank.

Table 2A

Line 100 – Solids/Debris

Process Tolerance Limits

Process Unit	Limits	Rationale
Low Capacity Solids Mixing (TT-02)	No waste with greater than 10 percent total organic carbon if waste is to be stabilized.	Safety and regulatory requirement. (WAC 173-303-140)
	No waste with a pH≤2 or a pH≥12.5.	Regulatory restriction and to prevent degradation of equipment. (WAC 173-303-140)
	No waste with a flash point less than 100° F.	Safety.
	No waste incompatible with feeding and mixing equipment and reagents.	Safety and to prevent acid attack on equipment.
	No waste that is not able to meet applicable land disposal requirements after stabilization using the prescribed stabilization recipe.	Process control and regulatory requirement. (WAC 173-303-140)
	No waste that is not able to meet applicable land disposal requirements after stabilization using the prescribed stabilization recipe.	Process control and regulatory requirement. (WAC 173-303-140)
	No ignitable (D001), corrosive (D002) or reactive (D003) waste	Safety
	No high mercury waste (i.e. ≥ 260 ppm Hg)	Regulatory requirement (WAC 173-303-140 [§ 268.40]
[1]Determined by visual inspection.		

This page left intentionally blank.

Table 2B
Line 200 – Liquid/Sludge
Process Parameters

Process Unit	Limits	Rationale
Liquid Treatment (TP-04)	No waste that is incompatible with other wastes to be consolidated and process equipment.	Safety
	No waste that is not amenable to pumping.	Potential for system to become clogged
	No waste with a flash point less than 100° F.	Safety
	No waste that is not amenable to the prescribed treatment (i.e., does not pass treatability test).	Safety and treatment performance.
	No waste with a pH≤2 or a pH≥12.5.	Prevent degradation of equipment.
	No ignitable (D001) or corrosive (D002) waste.	Safety.
	No high mercury waste (i.e., ≥ 260 ppm Hg)	Regulatory requirement (WAC 173-303-140 [40 CFR 168.40])

This page left intentionally blank.

Table 2B
Line 200 – Liquid/Sludge
Process Parameters

Process Unit	Limits	Rationale
Liquid Holding (TP-06)	No waste that is incompatible with other wastes in holding tank, equipment and be pumpable.	Safety and equipment operability.
	No waste with a flash point less than 100° F.	Safety
	No high mercury waste (i.e., ≥ 260 ppm Hg)	Regulatory requirement (WAC 173-303-140 [§168.40])
	No waste with a pH≤2 or a pH≥12.5.	Prevent degradation of equipment.
	No ignitable (D001), corrosive (D002) or reactive (D003) waste.	Safety
	No waste with greater than 10% by weight VOCs in liquids	Safety

This page left intentionally blank.

Table 2B
Line 200 – Liquid/Sludge
Process Parameters

Process Unit	Limits	Rationale
Liquid Consolidation (TP-09)	Waste must be compatible with other wastes to be consolidated, equipment and be pumpable.	Safety and equipment operability.
	Waste with a flash point less than 100° F.	Safety
	No waste with a pH≤2 or a pH≥12.5.	Prevent degradation of equipment.
	No high mercury waste (i.e., ≥ 260 ppm Hg)	Regulatory requirement (WAC 173-303-140 [§168.40])

This page left intentionally blank.

Table 2B
Line 200 – Liquid/Sludge
Process Parameters

Process Unit	Limits	Rationale
In-Container Mixing (TT-03)	No waste that is not compatible with mixing equipment.	Safety and treatment performance.
	No wastes with a flash point less than 100° F.	Safety.
	No high mercury waste (i.e., ≥ 260 ppm Hg)	Regulatory requirement (WAC 173-303-140 [§168.40])
	No waste that is not amenable to the prescribed treatment (e.g. does not pass treatability test).	Safety and treatment performance.
	No waste that is not able to meet applicable land disposal requirements after stabilization using the prescribed stabilization recipe.	Regulatory restriction (WAC 173-303-140)
	No high-TOC ignitable wastes.	Safety
	No air/water reactive wastes.	Safety

This page left intentionally blank.

Table 2B
Line 200 – Liquid/Sludge
Process Parameters

Process Unit	Limits	Rationale
Extraction Mixers (TP-10)	No waste with a pH≤2 or a pH≥12.5.	Regulatory restriction and to prevent degradation of equipment. (WAC 173-303-140)
	No waste with a flash point less than 100° F.	Safety.
	No waste incompatible with feeding and mixing equipment and reagents.	Safety and to prevent acid attack on equipment.
	No waste that is not able to meet applicable land disposal requirements after stabilization using the prescribed stabilization recipe.	Process control and regulatory requirement. (WAC 173-303-140)
	No high mercury waste (i.e. ≥ 260 ppm Hg)	Regulatory requirement (WAC 173-303-140 [§268.40]

Table 2C
Line 300 – Metal/Lead Debris
Process Parameters

Process Unit	Limits	Rationale
Cutting and Shearing (TP-02)	No containerized gas.	Safety.
	No pyrophoric metals.	Safety.
	No free volatile organic liquids.	Safety.
	No ignitable (D001), corrosive (D002) or reactive (D003) waste.	Safety.
Polymer Mixing (TT-04)	No waste that is incompatible with equipment and reagents.	Safety and treatment performance.
	No waste with greater than 10% organic/carbonaceous constituents.	Regulatory restriction (WAC 173-303-140)
	No ignitable (D001), corrosive (D002) or reactive (D003) waste.	Safety.
	No high mercury waste (e.g. > 260 ppm Hg)	Regulatory requirement (WAC 173-303-140 [§168.40])
Physical Extraction (TT-05)	No non-debris waste.	Regulatory restriction (WAC 173-303-040)
	No waste greater than 24" in any one dimension	Safety and treatment performance.
	No water reactive residues.	Safety.

This page intentionally left blank.

Table 2D
Line 400 – Heterogeneous Solids/Debris
Process Tolerance Limits

Process Unit	Limits	Rationale
Sorting (TP-03)	No bulk or containerized liquids.	Safety.
	No ignitable (D001), corrosive (D002) or reactive (D003) waste.	Safety.
Compaction/Super Compaction (TP-07)	No unpunctuated containerized gas containers.	Safety.
	No reactive debris exhibiting the characteristics of reactivity for cyanide. (≥ 250 ppm cyanide)	Regulatory requirement. (WAC 173-303-140 [§268.45(d)(3)])
	No bulk or containerized liquids.	Safety.
	No waste larger than 24 inches in any dimension.	Size limitation of compaction container.
	No ignitable (D001), corrosive (D002) or reactive (D003) waste.	Safety.
	No high mercury waste (i.e. ≥260 ppm Hg)	Regulatory requirement (WAC 173-303-140 [§168.40])
Aerosol Can Puncturing Device (TP-15)	Maximum process rate shall not exceed two (2) cans per minute.	Ensures adequate drain time.

This page intentionally left blank.

Table 2E
Line 500 – ~~Organic Liquids/Solids (GASVIT)~~Hazardous Wastewater/Sludge
Process Tolerance Limits

Process Unit	Limits	Rationale
~~Glove Box Sort (GV-01)~~Evaporation System (TP-16)	No ~~pieces of debris larger than 24 inches in any one dimension~~TSCA-regulated PCBs.	~~Safety and equipment performance~~Waste minimization.
	No ~~bulk~~ liquids with a pH ≤ 2 or a pH ≥ 12.5.	Safety and equipment performance.
	No ~~containerized liquids~~reactive waste.	Safety.
~~Table Sort (GV-02)~~	No ~~pieces of debris larger than 24 inches in any one dimension~~waste with a flash point < 100°F.	Safety and equipment performance.
	No ~~bulk~~ liquids with ≥10% by weight VOCs.	Safety.
	~~No containerized liquids.~~	~~Safety.~~
~~Liquid Tank (GV-02-1)~~	~~No waste that is not compatible with other wastes to be consolidated and with equipment.~~	~~Safety~~
	~~Waste must be amenable to pumping~~	~~Potential for system to become clogged~~
~~Liquid Feed System (GV-02-1)~~	~~No waste that will exceed the total chlorine feed rate.~~	~~Regulatory requirement.~~
	~~No waste that will exceed the total metal feed rate.~~	~~Regulatory requirement.~~
	~~No waste that will exceed the PCB feed rate.~~	~~Regulatory requirement~~
	~~Waste must be amenable to pumping.~~	~~Potential for system to become clogged~~
	~~No waste that will exceed the total mercury feed rate.~~	~~Regulatory requirement~~
~~Continuous Feed System (GV-02-2)~~	~~Only bagged waste is to be feed.~~	~~Safety and equipment performance.~~
	~~No waste that will exceed the total chlorine feed rate.~~	~~Regulatory requirement~~
	~~No waste that will exceed the total metal feed rate.~~	~~Regulatory requirement~~
	~~No waste that will exceed the total mercury feed rate.~~	~~Regulatory requirement~~
~~Batch Feed System (GV-02-3)~~	~~Only containerized waste is to be feed.~~	~~Safety and equipment performance.~~
	~~No waste that will exceed the total chlorine feed rate.~~	~~Regulatory requirement~~

	~~No waste that will exceed the total metal feed rate.~~	~~Regulatory requirement~~

~~Table 2E~~
~~Line 500 – Organic Liquids/Solids (GASVIT)~~
~~Process Tolerance Limits (cont.)~~

~~Process Unit~~	~~Limits~~	~~Rationale~~
~~Batch Feed System (GV-02-3)~~	~~No waste that will exceed the total mercury feed rate.~~	~~Regulatory requirement~~
~~Secondary Waste Treatment System (GV-11) Tanks~~	~~No ignitable (D001) or reactive (D003) waste.~~	~~Safety.~~
~~Secondary Waste Treatment System (GV-11) Evaporator~~	~~No ignitable (D001) or reactive (D003) waste.~~	~~Safety.~~
	~~Aqueous PCB residues <3 ppb~~	~~Regulatory requirement~~
	~~3.0 ≤pH ≤ 11~~	~~Equipment specification~~
	~~Solid PCB residues <2ppm~~	~~Regulatory requirement~~

~~[1]The permitted feed rate limits for metal and chlorine.~~

Table 2F
Waste Storage
Process Tolerance Limits

Waste Type	Limits	Rationale
Bulk Waste	No waste that is incompatible with other wastes in storage area and with storage equipment.	Safety and waste to waste compatibility.
	Waste must not have a flash point below 100° F.	Safety.
Containerized Waste	No waste that is not compatible with other wastes in storage area and with storage equipment.	Safety and waste to waste compatibility.
	No waste that is not compatible with container material.	Safety and to prevent deterioration of container.
	No liquids with a flash point less than 100° F unless packaged in a lab pack, ≤55- gallon container, or as an incidental liquid from containerized solids[1].	Safety.
Reactive, Corrosive, and Flammable Waste	No waste that is not compatible with other wastes in storage area.	Safety and waste to waste compatibility.
Treated Waste	No unrelated waste.	Prevent contaminating treated waste.

[1]Incidential liquids are liquids that collect inside a container as a result of container heating and cooling or agitation (e.g., interstitial liquids that collect at the bottom or top of a container during transportation.)

This page left intentionally blank.

Table 3
Fingerprint Parameter Tolerance Limits

Parameter	**Variability Limit**
Visual Inspection/Physical Description	Gross variation in color, physical appearance, consistency to profile, and free liquids.
pH	+/- 1 unit unless a wider range is specified on the waste profile sheet.
Cyanides	+/- 20% of the range provided on the approved waste profile.
Sulfides	+/- 20% of the range provided on the approved waste profile.
Flash point	+/- 30% of the range provided on the approved waste profile.
Explosive vapors (Lower Explosive Levels [LEL])	+/-50% of the range provided on the approved waste profile for concentrations greater than 20%.
	+/-100% of the range provided on the approved waste profile for concentrations between 1% and 20%.
	+/-200% of the range provided on the approved waste profile for concentrations less than 1%.
Specific gravity/density	+/-10% of the range provided on the approved waste profile.
PCBs	+/- 50% of the range provided on the approved waste profile.
Mercury	+/- 50% of the range provided on the approved waste profile.
Ignitability	Must be consistent with range specified on the approved waste profile sheet.
Water Compatibility	Must be consistent with what is reported on the approved waste profile sheet.
For each metal	**No waste will exceed total feed rate for each metal**

Note: The above limits are guidelines to set an acceptable range. However, the acceptable range cannot include a restricted waste or clearly fall outside of the process tolerance limits for any process unit where the waste will be treated. Variability limits for parameters not listed will be based on permit limitations, waste restrictions, process tolerance limits, or waste specific considerations

Table 4

Materials and Debris Potentially Contaminated with Regulated PCBs

Construction Materials	**Electrical Equipment/Materials**	**Hydraulic Equipment/Materials**
Insulation	Fluorescent light ballast	Hydraulic Oil
Ceiling tiles	Cables	Pumps
Roofing materials	Electrical tape	Gaskets
Siding material	Capacitors	Hoses
Paint	Commercial/industrial appliances	Valves
Coatings for roofing and siding	Motors	Compressor bearings
Impregnated asphalt	Rubber insulators	

Table 5
Ignitable, Corrosive, and Reactive Waste by Treatment Unit

	Liquids			**Solids**		
STB	Corrosive	Ignitable	Reactive	Corrosive	Ignitable	Reactive
TP-4	N	N	A	N	N	N
TP-9	A	A	A	A	A	A
TP-15	N	A	N	N	N	N
~~GV-01 Box~~	~~A~~	~~A~~	~~A~~	~~A~~	~~A~~	~~A~~
~~GV-02-01~~	~~N~~	~~A~~	~~A~~	~~N~~	~~N~~	~~N~~
~~GV-02-02~~TP-16	N	N	N	N/A	N/A	N/A
~~GV-02-03~~	~~N~~	~~N~~	~~N~~	~~A~~	~~A~~	~~A~~
~~GV-03~~	~~N~~	~~A~~	~~A~~	~~A~~	~~A~~	~~A~~

Stream No.	Table 6. Solids/Debris Pre-treatment Analyses
	Sample Description
100	Moisture percent, size, compatibility with stabilization reagent and equipment.
101	Verify that there is less than 10% organic vapor.
102	Visual inspection to verify that waste does not contain metal debris, plastic films/sheets, cables, ropes, or reinforced concrete.
103	Verify that the waste is compatible with stabilization reagent.
104-110	RESERVED

Stream No.	Table 7. Solids/Debris In-process Analyses
	Sample Description
111	Verify waste meet moisture requirements.
112	Verify waste meet size requirements.
113	Verify waste meet size requirements.
114	Verify that liquids are compatible with liquids in holding tank.
115	Visual inspection to verify containers are empty.
116	Verify that waste meets the size and moisture requirements for polymer stabilization.
117	Verify that waste meets the size and moisture requirements for polymer stabilization.
118	Visual inspection to verify containers are empty.
118-150	RESERVED

Table 8. Solids/Debris Post-treatment Analyses			
Waste Type	**STABILIZED WASTE STREAM 151**	**Yes**	**No**
Listed waste with technology treatment standard	LDR Check		X
	Stay in Subtitle C	X	
Listed waste with concentration treatment standard	LDR Check	X	
	Stay in Subtitle C	X	
Characteristic waste with technology treatment standard	LDR Check		X
	Stay in Subtitle C		X
Characteristic waste with concentration treatment standard	LDR Check	X	
	Stay in Subtitle C		X
Universal treatment standard	UTS Check	X	
	Stay in Subtitle C		X
WA state only waste	LDR Check	X	
	Stay in Subtitle C	X	

Stream No.	Table 9. Liquid/Sludge Pre-treatment
	Sample Description
200	Verify waste passed treatability test.
201	Verify wastes to be consolidated are compatible.
202	Verify waste passed treatability test.
203	Verify waste contains less than 20% volatile flammable liquids.
204	Verify waste passed treatability test.
205-210	RESERVED

Stream No.	Table 10. Liquid/Sludge In-process
	Sample Description
211	Visual inspection to verify containers are empty.
212	Verify that liquids are compatible with stabilization reagent.
213	None.
214	Visual inspection to verify containers are empty.
215	Verify that liquids are compatible with stabilization reagent.
216	None.
217	Visual inspection to verify containers are empty.
218	Verify that liquids are compatible with stabilization reagent.
219	Verify that liquids are compatible with liquids in holding tank.
220	Verify that liquids are compatible with stabilization reagent.
221	Verify that spent resins are compatible with stabilization reagent.
222	Verify that spent carbon is compatible with stabilization reagent.
~~223~~	~~Verify that GASVIT™ feed rates are not exceeded.~~
~~224~~	~~Verify that GASVIT™ feed rates are not exceeded.~~
~~225~~	~~Verify that GASVIT™ feed rates are not exceeded.~~
226	Verify that spent filter element/sludge is compatible with stabilization reagent.
227	Visual inspection to verify containers are empty.
228	Visual inspection to verify containers are empty.
229-250	RESERVED

Table 11. Liquid/Sludge
Post-treatment Analyses

Waste Type	Stream 251	Yes	No
Listed waste with technology treatment standard	LDR Check		X
	Stay in Subtitle C	X	
Listed waste with concentration treatment standard	LDR Check	X	
	Stay in Subtitle C	X	
Characteristic waste with technology treatment standard	LDR Check		X
	Stay in Subtitle C		X
Characteristic waste with concentration treatment standard	LDR Check	X	
	Stay in Subtitle C		X
Universal treatment standard	UTS Check	X	
	Stay in Subtitle C		X
WA state only waste	LDR Check	X	
	Stay in Subtitle C	X	

Stream No.	Table 12. Metal/Lead Debris Pre-treatment Analyses
	Sample Description
300	Visual inspection to verify debris is metal/lead.
301	Visual inspection to verify debris is metal/lead.
302	Visual inspection to verify debris is metal/lead.
303	Visual inspection to verify debris meets the size requirements of the physical extraction system.
304	Visual inspection to verify that debris is lead.
302-310	RESERVED

Stream No.	Table 13. Metal/Lead Debris In-process Analyses
	Sample Description
311	Visual inspection to verify containers are empty.
312	None.
313	None.
314	Visual inspection to verify containers are empty.
315	Verify waste meets size requirement for stabilization.
316	Verify spent blasting media slurry and cartridge meet the moisture requirements for stabilization and are compatible with the stabilization reagent.
~~317~~	~~Verify that spent blasting media slurry and cartridge do not exceed GASVIT™ feed restrictions.~~
318	Verify that rinse and cleaning residues meet the moisture requirements for stabilization and are compatible with the stabilization reagent.
~~319~~	~~Verify that rinse and cleaning residues do not exceed GASVIT™ feed restrictions.~~
320	Verify that size-reduced metal meets the size requirements for macro-encapsulation.
321	Visual inspection to verify containers are empty.
322-350	RESERVED

Table 14. Metal/Lead Debris
Post-treatment Analyses

Waste Type	Debris Stream 351			Polymer Stabilized Stream 352			Macro Lead	
		Yes	No		Yes	No	Yes	No
Listed waste with technology treatment standard	LDR Check	X		LDR Check				X
	Stay in Subtitle C		X	Stay in Subtitle C	X		X	
Listed waste with concentration treatment standard	LDR Check	X		LDR Check				X
	Stay in Subtitle C		X	Stay in Subtitle C	X		X	
Characteristic waste with technology treatment standard	LDR Check	X		LDR Check				X
	Stay in Subtitle C		X	Stay in Subtitle C	X			X
Characteristic waste with concentration treatment standard	LDR Check	X		LDR Check				X
	Stay in Subtitle C		X	Stay in Subtitle C	X			X
Universal treatment standard	UTS Check			UTS Check				X
	Stay in Subtitle C			Stay in Subtitle C	X			X
WA State Only waste	LDR Check	X		LDR Check	X			X
	Stay in Subtitle C		X	Stay in Subtitle C	X			X

Stream No.	Table 15. Heterogeneous Solids/Debris Pre-Treatment Analyses
	Sample Description
400	Visual inspection to verify waste is debris.
401	Visual inspection to verify waste is debris.
402	Visual inspection to verify waste is debris.
403	Visual inspection to verify waste is debris.
404-410	RESERVED

Stream No.	Table 16. Heterogeneous Debris In-process Analyses
	Sample Description
411	Visual inspection to verify containers are empty.
412	None.
413	Visual inspection to verify containers are empty.
414	Visual inspection to verify sorted material is bulk lead.
415	Visual inspection to verify sorted material is bulk metal.
~~416~~	~~Verify that canistered waste does not exceed GASVIT feed restrictions.~~
~~417~~	~~Verify that bagged waste does not exceed GASVIT feed restrictions.~~
418	Verify that liquids are compatible with other liquids prior to consolidation.
419-450	RESERVED

Table 17. Heterogeneous Solids/Debris Post-treatment Analyses			
Waste Type	**Immobilized Debris Stream 451**		
Listed waste with technology treatment standard		Yes	No
	LDR Check		X
	Stay in Subtitle C	X	
Listed waste with concentration treatment standard			
	LDR Check		X
	Stay in Subtitle C	X	
Characteristic waste with technology treatment standard			
	LDR Check		X
	Stay in Subtitle C	X	
Characteristic waste with concentration treatment standard			
	LDR Check		X
	Stay in Subtitle C	X	
Universal treatment standard			
	UTS Check		X
	Stay in Subtitle C	X	
WA State Only waste			
	LDR Check	X	
	Stay in Subtitle C	X	

Stream No.	Table 18. ~~Organic Liquids/Solids GASVIT~~Hazardous Wastewater Pre-treatment Analyses
	Sample description
500	Verify that waste does not exceed ~~GASVIT™~~Evaporator feed restrictions.
501 &	Verify that waste ~~doe~~is not a TSCA-regulated PCB waste ~~exceed GASVIT™ feed restrictions~~.
502	Verify that pH of waste ~~doe~~is ~~not exceed GASVIT™ feed restrictions~~between 2.0 and 12.5.
~~503~~	Verify that waste ~~doe~~is not ~~exceed GASVIT™ feed restrictions~~ a reactive waste.
~~504~~	Verify that ~~waste does not exceed GASVIT™ feed restrictions~~the flashpoint is >100°F.
~~505~~	Verify that wastes ~~are compatible before consolidating and that the GASVIT™ feed restrictions are~~does-not ~~exceeded~~contain VOCs ≥10% by weight.
~~506~~	~~Verify that wastes are compatible before consolidating and that the GASVIT™ feed restrictions are not exceeded.~~
~~507-510~~	~~RESERVED~~

~~Stream No.~~	~~Table 19. Organic Liquids/Solids GASVIT In-process Analyses~~
	~~Sample description~~
~~511~~	~~Verify that GASVIT™ feed rates are not exceeded.~~
~~512~~	~~None.~~
~~513~~	~~None.~~
~~514~~	~~Verify that GASVIT™ feed rates are not exceeded.~~
~~515~~	~~Verify that GASVIT™ feed rates are not exceeded.~~
~~516~~	~~Verify that GASVIT™ feed rates are not exceeded.~~
~~517~~	~~Box sorted metals requiring physical extraction.~~
~~518~~	~~Verify that GASVIT™ feed rates are not exceeded.~~
~~519~~	~~Verify that GASVIT™ feed rates are not exceeded.~~
~~520~~	~~None.~~
~~521~~	~~None.~~
~~522~~	~~Verify that GASVIT™ feed rates are not exceeded.~~
~~523~~	~~Verify that GASVIT™ feed rates are not exceeded.~~
~~524~~	~~Verify that GASVIT™ feed rates are not exceeded.~~
~~525~~	~~Verify that GASVIT™ feed rates are not exceeded.~~
~~526~~	~~Verify that GASVIT™ feed rates are not exceeded.~~
~~527~~	~~Verify treatment residues to confirm PCB Treatment~~
~~528~~	~~Verify treatment residues to confirm PCB Treatment~~
~~529~~	~~Visual inspection to verify containers are empty.~~
~~530~~	~~Visual inspection to verify containers are empty.~~
~~531~~	~~Visual inspection to verify containers are empty.~~
~~532~~	~~None.~~
~~533~~	~~Visual inspection to verify containers are empty.~~
~~534~~	~~Visual inspection to verify containers are empty.~~
~~535~~	~~Visual inspection to verify containers are empty.~~
~~536~~	~~Verify that GASVIT™ feed rates are not exceeded.~~
~~537-550~~	~~RESERVED~~

The page left intentionally blank.

Table ~~20~~19. ~~Organic Liquids/Solids GASVIT~~Hazardous Wastewater Post-treatment Analyses			
Waste Type	~~GASVIT™ Glass~~ Evaporator Residues **Line 503/50~~451/552~~**		
Listed waste with technology treatment standard		Yes	No
	LDR Check	X	
	Stay in Subtitle C	X	
Listed waste with concentration treatment standard		Yes	No
	LDR Check	X	
	Stay in Subtitle C	X	
Characteristic waste with technology treatment standard		Yes	No
	LDR Check	X	
	Stay in Subtitle C		X
Characteristic waste with concentration treatment standard		Yes	No
	LDR Check	X	
	Stay in Subtitle C		X
Universal treatment standard		Yes	No
	UTS Check	X	
	Stay in Subtitle C		X
~~PCBs in treatment residues 2ppm Solids 3 ppb aqueous~~		~~Yes~~	~~No~~
	~~LDR/PCB Check~~	~~X~~	
	~~Stay in Subtitle C~~	~~X~~	
WA state only waste		Yes	No
	LDR Check	X	
	Stay in Subtitle C		X

Note: Evaporator residues which stay in Subtitle C will be further processed on-site or disposed off-site.

This page left intentionally blank.

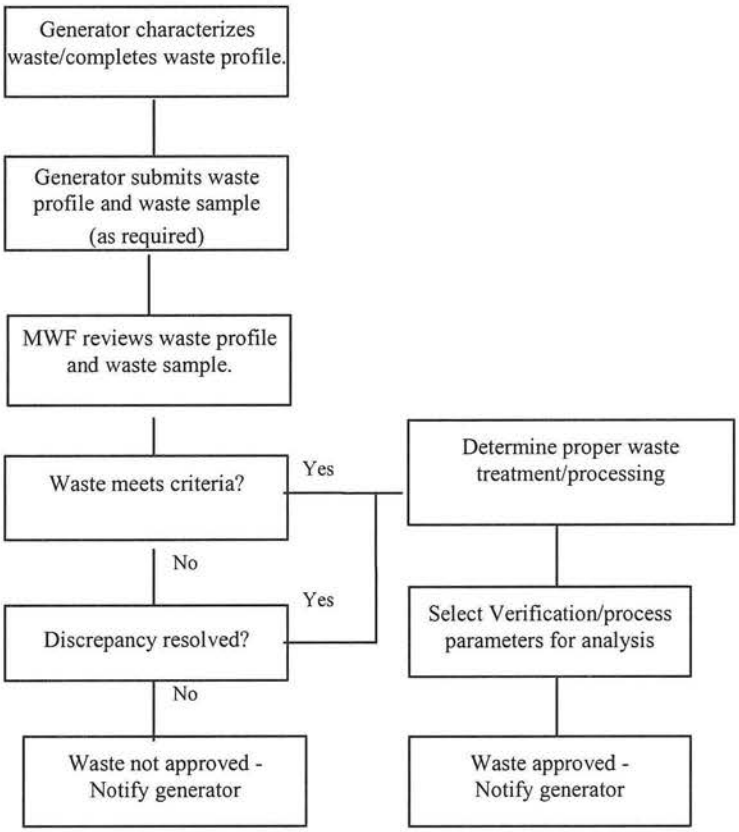

Figure 1.0. Pre-Acceptance Process Logic Flow Diagram.

This page left intentionally blank.

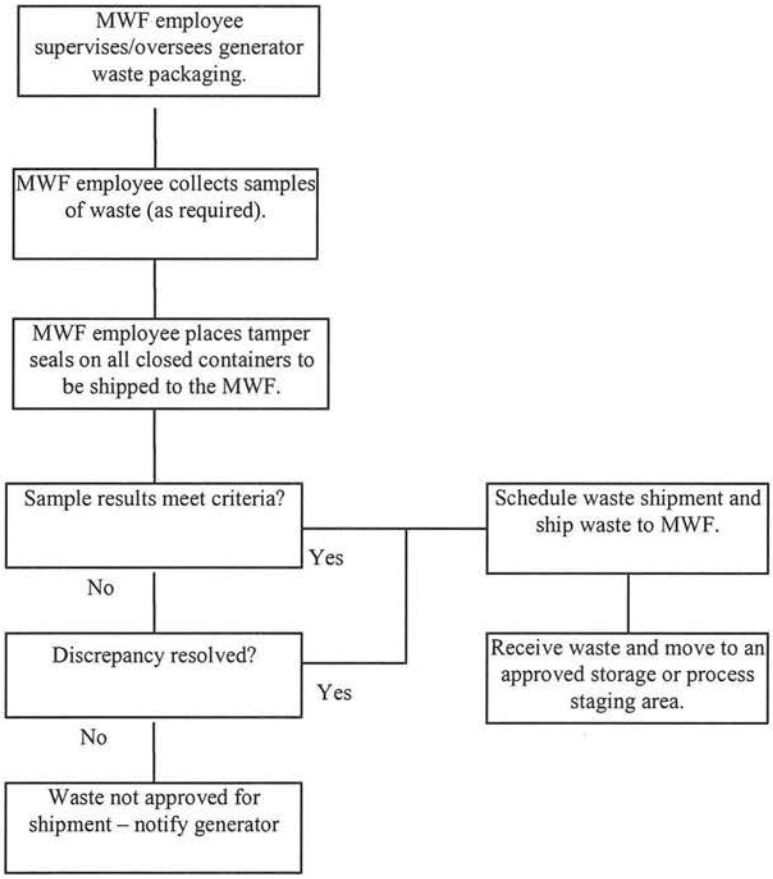

Figure 2: Brokerage Logic Flow Diagram

This page left intentionally blank.

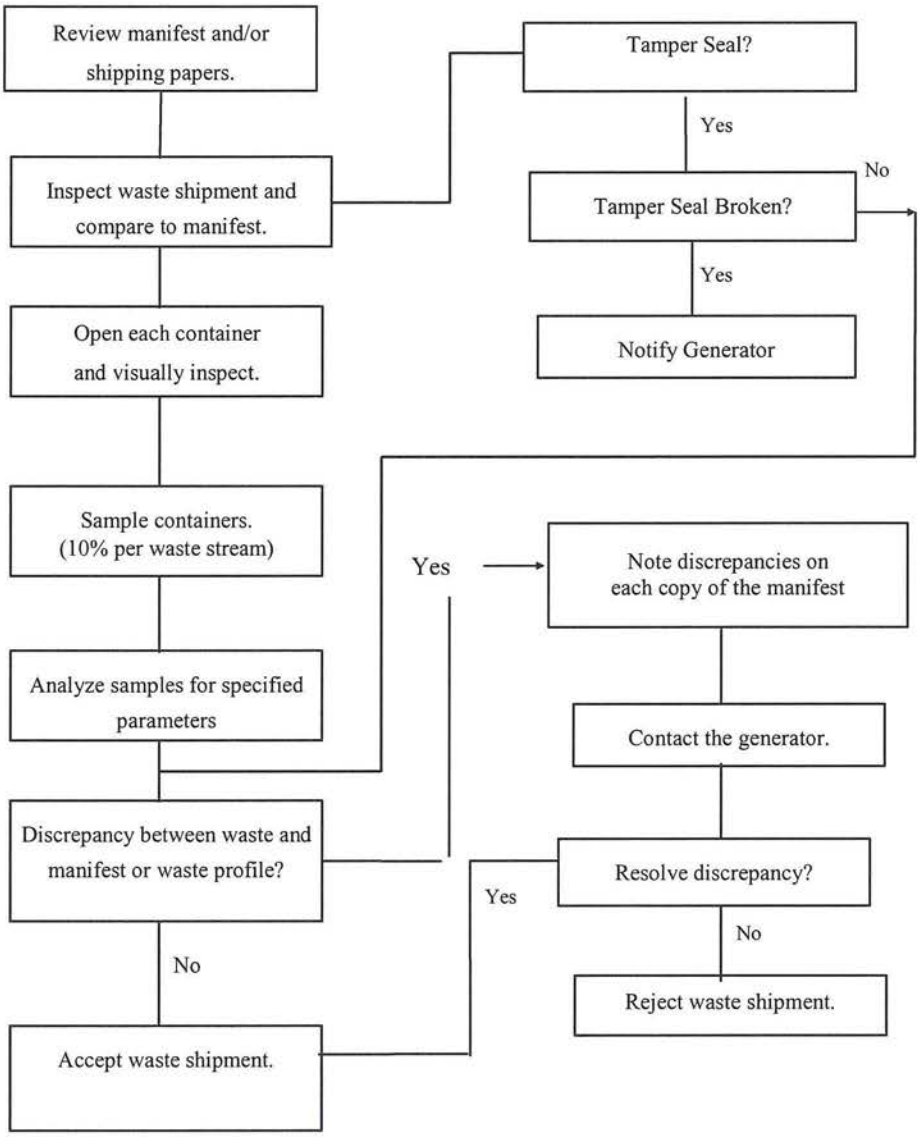

Figure 3.0. Waste Acceptance Process Logic Flow Diagram

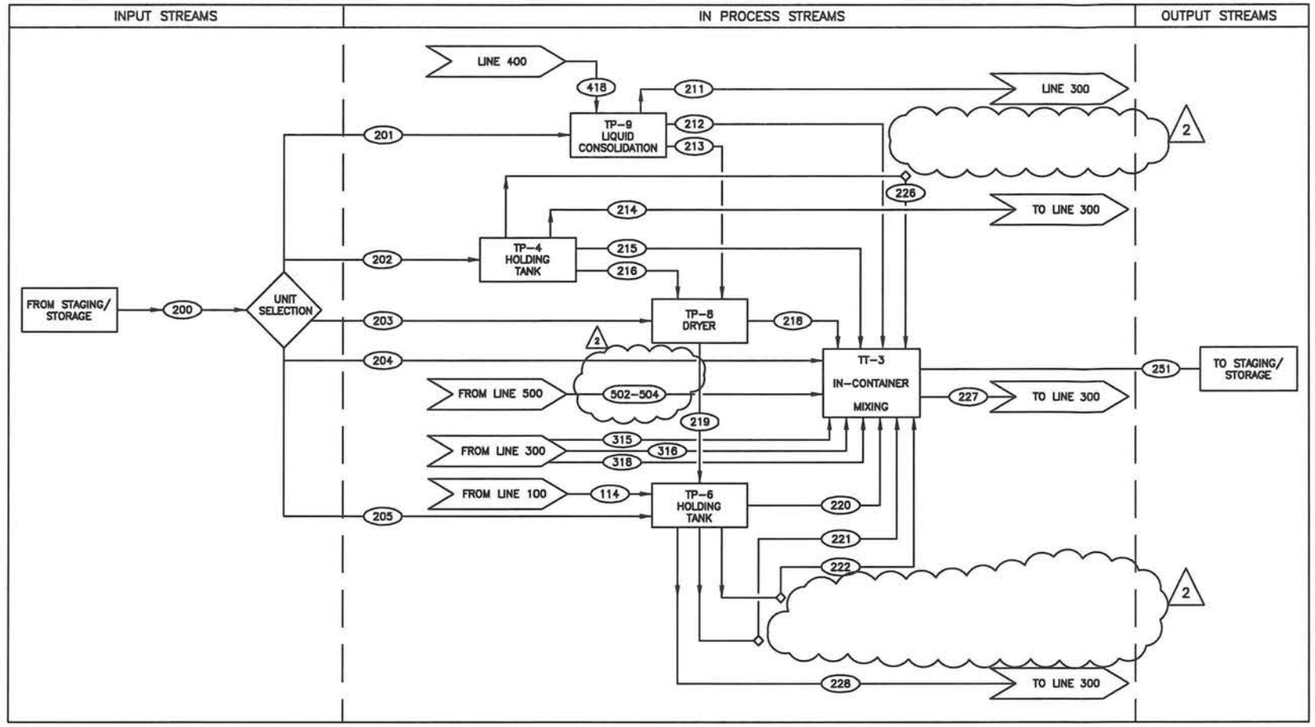

STREAM NO.	STREAM DESCRIPTION	STREAM RESTRICTIONS
	LINE 200 INPUT STREAMS	
200	Liquids and/or sludge with less than 5% suspended solids requiring chemical treatment prior to stabilization.	No TSCA regulated PCBs or waste designated as W001 as defined by WAC 173-303-9904.
201	Liquid waste shipped to the facility in small containers (<5 gal) that must be consolidated, chemically treated and/or stabilized. If the facility receives several small containers that are chemically compatible, they will be consolidated into a single drum. If the liquid waste is in such a small quantity that consolidation is not required (see stream 201E), it will be chemically treated and stabilized in a container inside the consolidation enclosure. Stream designations for waste requiring chemical treatment before stabilization are 201A, B, C & D.	Same as Line 200.
201A	Liquid waste (<5 gal) requiring consolidation, neutralization (NEUTR) before stabilization (STABL).	Same as Line 200.
201B	Liquid waste (<5 gal) requiring consolidation, chemical oxidation (CHOXD) before stabilization (STABL).	Same as Line 200.
201C	Liquid waste (<5 gal) requiring consolidation, chemical reduction (CHRED) before stabilization (STABL).	Same as Line 200.
201D	Liquid waste (<5 gal) requiring consolidation, deactivation (DEACT) before stabilization (STABL).	Same as Line 200.
201E	Liquid waste (<5 gal) requiring consolidation, treatment and/or stabilization in a small container inside the consolidation enclosure.	Same as Line 200.
202	Bulk liquid waste (>5 gal) requiring chemical treatment neutralization (NEUTR, CHOXD, CHRED,DEACT) before stabilization (STABL).	No TSCA regulated PCBs or waste designated as W001 as defined by WAC 173-303-9904. No High-Toc waste. No air/water reactive waste.
202A	Bulk liquid waste requiring neutralization (NEUTR) before stabilization (STABL).	Same as Line 202.
202B	Bulk liquid waste requiring chemical oxidation (CHOXD) before stabilization (STABL).	Same as Line 202.
202C	Bulk liquid waste requiring chemical reduction (CHRED) before stabilization (STABL).	Same as Line 202.
202D	Bulk liquid waste requiring deactivation (DEACT) before stabilization (STABL).	Same as Line 202.
203	liquid waste requiring concentration before stabilization.	No TSCA regulated PCBs or waste designated as W001 as defined by WAC 173-303-9904. No ignitable (D001) or corrosive (D002), or reactive (D003) wastes.
204	Liquid waste containers (>5 gal) requiring in-container neutralization and/or stabilization.	No TSCA regulated PCBs or waste designated as W001 as defined by WAC 173-303-9904. No High-Toc waste. No air/water reactive waste. No waste with >10% VOC.
205	Waste requiring uv, ix, or carbon filtration.	Same as Line 203.
206-210	RESERVED	

* 1 - "EMPTY" AS DEFINED BY WAC 173-303-160

STREAM NO.	STREAM DESCRIPTION	STREAM RESTRICTIONS
	LINE 200 INPUT STREAMS	
211*	Empty[1] containers requiring cleaning or triple rinse.	No TSCA regulated PCBs or waste designated as W001 as defined by WAC 173-303-9904.
212	Consolidated and chemically treated liquids requiring stabilization.	Carries the same waste code(s) designated to the input stream.
213	Consolidated and chemically treated liquids requiring concentration.	Carries the same waste code(s) designated to the input stream.
214*	Empty[1] containers requiring cleaning or triple rinse.	Carries the same waste code(s) designated to the input stream.
215	Chemically treated bulk liquids requiring stabilization.	Carries the same waste code(s) designated to the input stream.
216	Chemically treated bulk liquids requiring concentration.	Carries the same waste code(s) designated to the input stream.
217	RESERVED	
218	Concentrated waste requiring stabilization.	Same as Line 203.

STREAM NO.	STREAM DESCRIPTION	STREAM RESTRICTIONS
219	Distillate liquids generated from concentrating the incoming liquid waste.	Carries the same waste code(s) designated to the input stream.
220	Treated liquids requiring stabilization.	No TSCA regulated PCBs or waste designated as W001 as defined by WAC 173-303-9904.
221	Spent IX resins requiring stabilization.	Carries the same waste code(s) designated to the input stream.
222	Spent carbon requiring stabilization.	Carries the same waste code(s) designated to the input stream.
226	Spent filter element/sludge requiring stabilization.	Carries the same waste code(s) designated to the input stream.
227*	Empty[1] containers requiring cleaning or triple rinse.	Carries the same waste code(s) designated to the input stream.
228*	Empty[1] containers requiring cleaning or triple rinse.	Carries the same waste code(s) designated to the input stream.
229-250	RESERVED	
	LINE 200 INPUT STREAMS	
251	Waste stabilization with cementaceous reagent which complies with LDR requirements either via the treatment technology standard (STABL) or the appropriate concentration treatment standards.	For final and waste codes designations refer to streams 251A and 251B below.
251A	Stabilized Toxic Characteristic Waste.	With LDR treatment certification, this stream exits subtitle C and can be disposed at a LLW disposal facility.
251B	Stabilized Listed Waste.	With LDR treatment certification, this stream can be disposed at a subtitle C mixed waste disposal facility.

REV	DATE	BY	QA	DATE	DESCRIPTION
2	8/25/14	SDR			PERMIT MODIFICATION REQUEST 135
1	10/5/00	JA			REVISED PER DCA 31001-DCA-023
0	2/16/98	JM			ISSUE FOR TSCA/RCRA PERMIT APPLICATION

REVISION

Copy Review & Recycle

PermaFix® environmental services
A Nuclear Services and Waste Management Company

DATE	
DRAWN	
CHECKED	
DFTG APVD	
ENGR	
APVD	
OTHER	
QA	
APPVD FOR IMPLEMENTATION BY	
FOR	DATE

MIXED WASTE FACILITY
BUILDING 13

FUNCTIONAL FLOW DESCRIPTION-LINE 200 LIQUIDS/SLUDGE

SCALE: NONE | SHEET NO. 4

DWG. NO. ATT. CC FIGURE 5 | REV 2

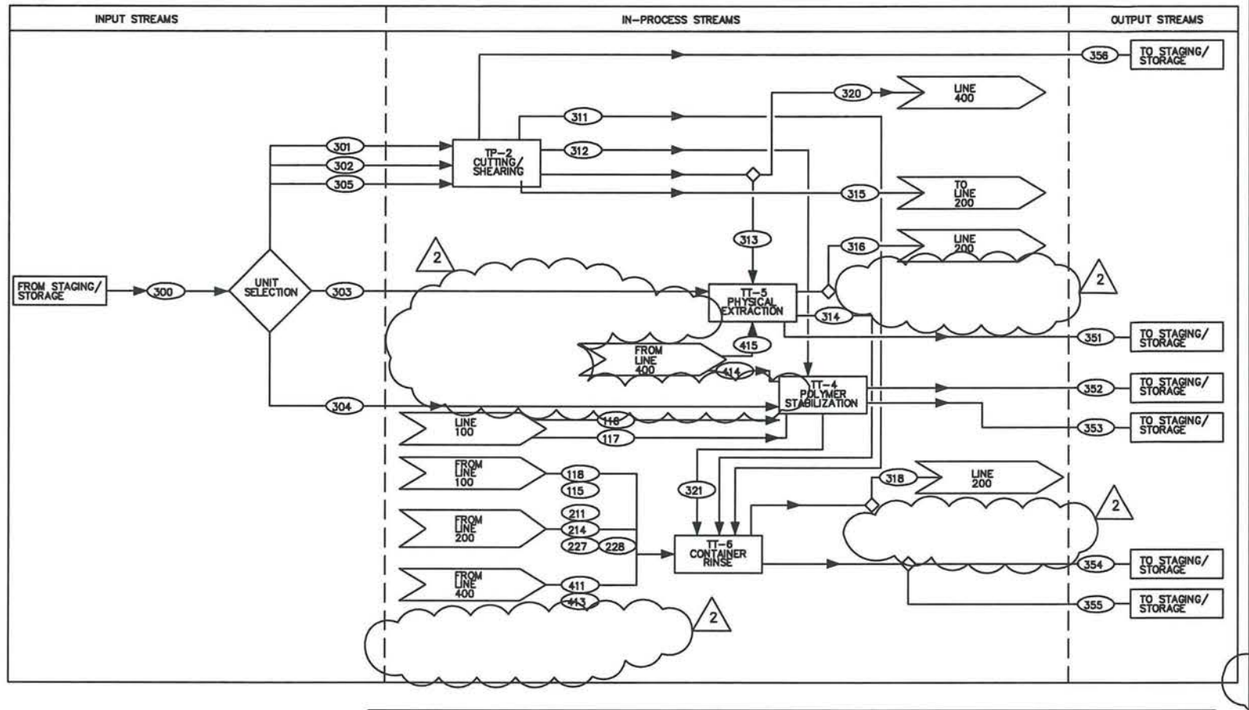

STREAM NO.	STREAM DESCRIPTION	STREAM RESTRICTIONS
	LINE 300 INPUT STREAMS	
300*	Bulk lead requiring macro-encapsulation (MACRO) and metal debris[1] requiring physical extraction.	No TSCA regulated PCBs or waste desginated as W001 as defined by WAC 173-303-9904. No ignitable (D001), corrosive (D002), or reactive (D003) waste.
301	Metals requiring size reduction prior to physical extraction or macro-encapsulation.	Same as Line 300.
302	Lead requiring size reduction prior to macro-encapsulation.	Same as Line 300.
303*	Metal classified as "debris"[1] requiring physical extraction.	Same as line 300.
304	Bulk lead requiring macro-encapsulation.	Same as line 300.
305	Waste containing elemental Hg requiring amalgamation.	Same as line 300.
306-310	RESERVED	
	LINE 300 IN-PROCESS STREAMS	
311*	Empty[2] containers requiring cleaning or triple rinse.	Carries the same waste code(s) designated to the input waste stream.
312	Size reduced lead requiring immobilization.	Carries the same waste code(s) designated to the input waste stream.
313	Size reduced metals requiring physical extraction.	Carries the same waste code(s) designated to the input waste stream.
314*	Empty[2] container requiring cleaning or triple rinse.	Carries the same waste code(s) designated to the input waste stream.
315	Metal & lead shavings requiring stabilization.	Carries the same waste code(s) designated to the input waste stream.
316	Spent blasting media slurry and cartridge filters requiring stabilization.	Carries the same waste code(s) designated to the input waste stream.
318*	Empty[2] container rinse/cleaning residues requiring stabilization.	Carries the same waste code(s) designated to the input waste stream.
320	Size reduced metal not suitable for physical extraction.	Carries the same waste code(s) designated to the input waste stream.
321*	Empty[2] container requiring cleaning or triple rinse.	Carries the same waste code(s) designated to the input waste stream.
322-350	RESERVED	
	LINE 300 OUTPUT STREAMS	
351*	Debris[1] waste treated to meet LDR standards using physical extraction method.	For final disposition and waste codes designations refer to streams 351 A and B.
351A*	Debris[1] that displayed Toxic Characteristics and was treated using physical extraction.	With an LDR treatment certification, this stream exits subtitle C and can be disposed at an LLW disposal facility
351B*	Debris[1] that carried a listed waste code and was treated using physical extraction.	With an LDR treatment certification, this stream exits subtitle C and can be disposed at an LLW disposal facility

* 1 - "Debris" as defined by WAC 173-303-040
2 - "Empty" as defined bt WAC 173-303-160

STREAM NO.	STREAM DESCRIPTION	STREAM RESTRICTIONS
	LINE 300 OUTPUT STREAMS	
352	Waste stabilization with polymer reagent which complies with LDR requirements either via the treatment technology standard (STABL) or the appropriate concentration treatment standards.	For final disposition and waste codes designations refer to streams 352 A and B.
352A	Stabilized Toxic Characteristic waste.	With an LDR treatment certification, this stream exits subtitle C and can be disposed at an LLW disposal facility
352B	Stabilized listed wastes.	With an LDR treatment certification, this stream can be disposed at a subtitle C mixed waste disposal facility.
353	Bulk lead macro-encapsulated to meet required treatment technology (MACRO).	With an LDR treatment certification, this stream can be disposed at a subtitle C mixed waste disposal facility.
354	Intact and reusable containers cleaned, or triple rinsed to meet clean container criteria.	With a cleaning certification, this container exits subtitle C control and can be reused, disposed at a LLW disposal facility, or free released through the LLW treatment facility.
355	Damaged and non-reusable containers cleaned, or triple rinsed to meet clean container criteria.	With a cleaning certification, this container exits subtitle C control and can be reused, disposed at a LLW disposal facility, or free released through the LLW treatment facility.
356	Amalgamated Hg waste	With an LDR treatment certification, this stream exits subtitle C and can be disposed at an LLW disposal facility

REV	DATE	BY	QA	DATE	DESCRIPTION
2	8/25/14				PERMIT MODIFICATION REQUEST 135
1	3/27/01				REVISED PER DCA 31001-DCA-0035
0	2/16/98				ISSUE FOR EPA PERMIT APPLICATION

REVISION

Review & Reference Copy

PermaFix® environmental services
A Nuclear Services and Waste Management Company

DATE	
DRAWN	
CHECKED	
DFTG APVD	
ENGR	
APVD	
OTHER	
QA	
APPVD FOR IMPLEMENTATION BY	
FOR	DATE

MIXED WASTE FACILITY
BUILDING 13

FUNCTIONAL FLOW DESCRIPTION-LINE 300 METAL/LEAD DEBRIS

SCALE: NONE | SHEET NO. 5

DWG. NO. ATT. CC FIGURE 6 | REV 2

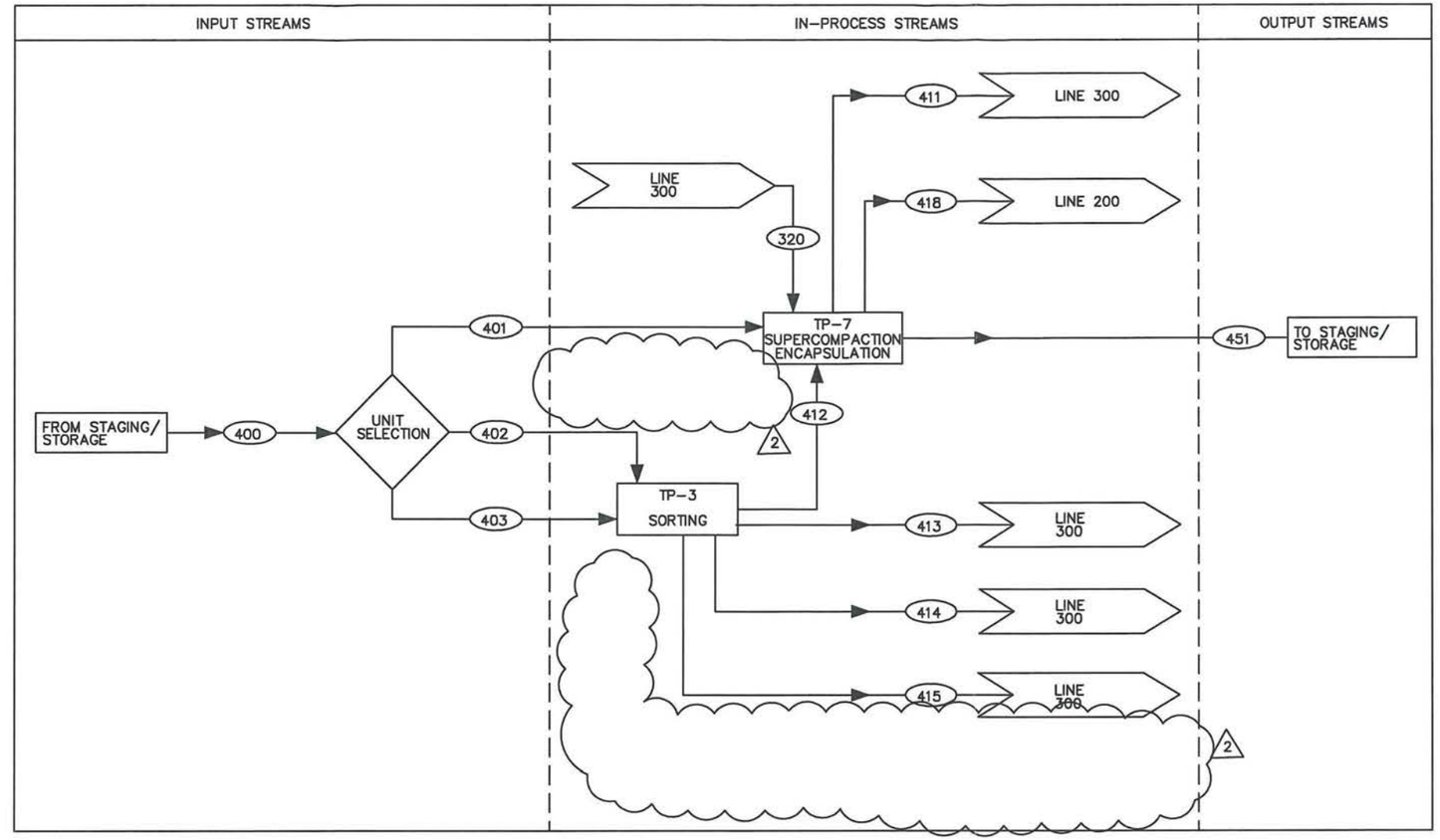

STREAM NO.	STREAM DESCRIPTION	STREAM RESTRICTIONS
	LINE 400 INPUT STREAMS	
400*	Heterogeneous solids requiring sorting and debris [1] requiring sorting and/or immobilization.	No TSCA regulated PCBs or waste desginated as W001 as defined by WAC 173-303-9904. No ignitable (D001), corrosive (D002), or reactive (D003) waste.
401*	Debris[1] not requiring sorting.	Same as Line 400.
402	Hetrogeneous waste requiring sorting.	Same as Line 400.
403*	Debris[1] requiring sorting.	Same as line 400.
404-410	RESERVED	
	LINE 400 IN-PROCESS STREAMS	
411*	Empty[2] container requiring cleaning or triple rinse.	Carries the same waste code(s) designated to the input waste stream.
412*	Sorted debris[1] requiring compaction and immobilization.	Carries the same waste code(s) designated to the input waste stream.
413*	Empty[2] containers requiring cleaning or triple rinse.	Carries the same waste code(s) designated to the input waste stream.
414	Sorted bulk lead requiring macro-encapsulation.	Carries the same waste code(s) designated to the input waste stream.
415	Sorted metals requiring physical extraction.	Carries the same waste code(s) designated to the input waste stream.
418	Collected liquids from compaction operations.	Carries the same waste code(s) designated to the input waste stream.
419-450	RESERVED	
	LINE 400 OUTPUT STREAMS	
451*	Debris[1] treated to meet LDR standards using immobilization.	For final disposition and waste codes designations refer to streams 451A and 451B below
451A*	Debris[1] that displayed Toxic Characteristics and was treated using immobilization.	With an LDR treatment certification, this stream can be disposed at a subtitle C mixed waste disposal facility.
451B*	Debris[1] that carried a listed waste code(s) and was treated using immobilization.	With an LDR treatment certification, this stream can be disposed at a subtitle C mixed waste disposal facility.

2

* 1 - "Debris" as defined by WAC 173-303-040
2 - "Empty" as defined by WAC 173-303-160

REV	DATE	BY	QA	DATE	DESCRIPTION
2	8/25/14				PERMIT MODIFICATION REQUEST 135
0	2/16/98				ISSUE FOR TSCA/RCRA PERMIT APPLICATION

REVISION

Copy Review & Recycle

PermaFix® environmental services
A Nuclear Services and Waste Management Company

DATE	
DRAWN	
CHECKED	
DFTG APVD	
ENGR	
APVD	
OTHER	
QA	
APPVD FOR IMPLEMENTATION BY FOR DATE	

MIXED WASTE FACILITY
BUILDING 13

FUNCTIONAL FLOW DESCRIPTION-LINE 400
HETEROGENEOUS SOLIDS/DEBRIS

SCALE: NONE | SHEET NO. 6
DWG. NO. ATT. CC FIGURE 7 | REV 2

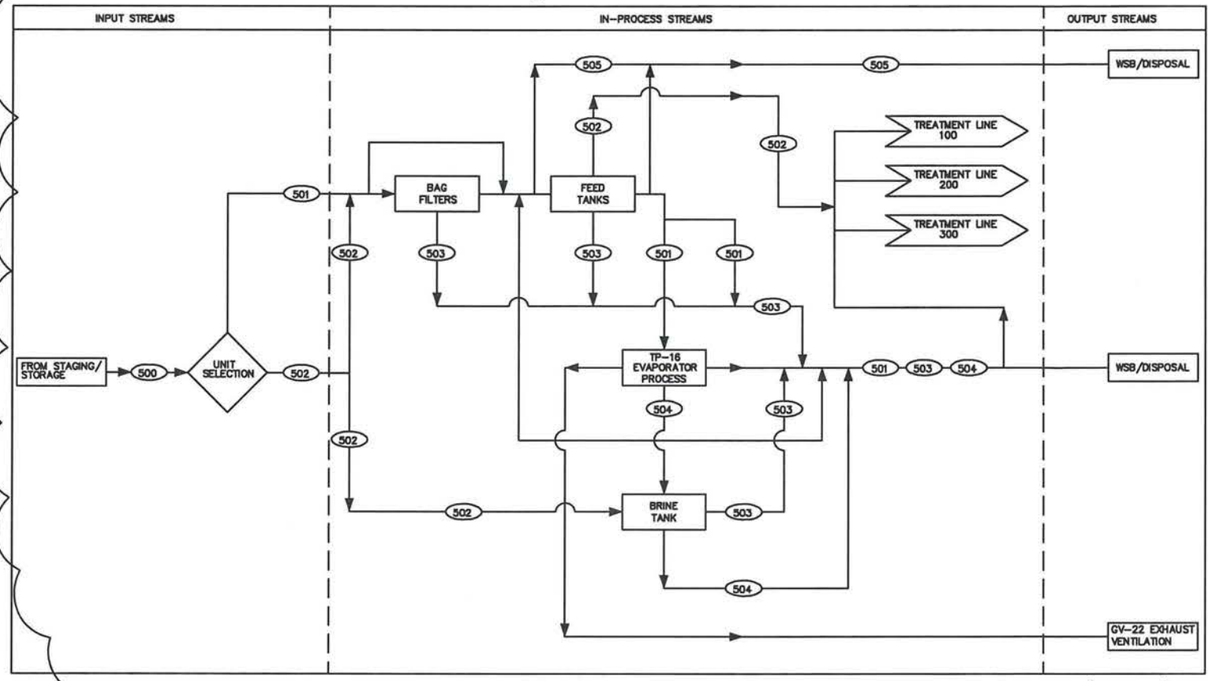

STREAM NO.	STREAM DESCRIPTION	STREAM RESTRICTIONS
LINE 500 INPUT STREAMS		
500	Waste streams requiring evaporation prior to treatment.	No Ignitable, Corrosive, or Reactive waste. No TSCA-Regulated PCB's. No High-TOC waste. No waste >10% VOC.
501	Inorganic liquids or sludges potentially contaminated with organics from tankers or containers to be volume reduced.	Same as Treatment Line-500.
502	Inorganic liquids or sludges potentially contaminated with organics to be added to either a feed tank, or other container, or to the brine tank prior to neutralization, solidification, or stabilization.	Same as Treatment Line-500.
LINE 500 IN-PROCESS STREAMS		
503	Sludges/Solids filtered or settled out of 501 to be stablized, solidified, or disposed.	Carries same waste codes designated to the input streams. Same restrictions as Treatement Line-500.
504	Brine and residue from evaporation process.	Same as Treatment Line-500
LINE 500 OUTPUT STREAMS		
505	RCRA empty containers.	None

*1-"Empty" as defined by WAC 173-303-160 and 40 CFR 761.79

1

EDWARD CONSULTING ENGINEERS, INC.
20565 SW T.V. HWY #355 ALOHA, OREGON 97006
(503) 642-1999, FAX 649-6139

DRAWING NO | DRAWING TITLE
REFERENCE DRAWINGS
NEXT HIGHER ASSEMBLY:

					SGN 7/13/14	REV. 4 OF THE WASTE ANALYSIS PLAN	1
			JM	PEB	2/18/98	ISSUE FOR TSCA/RCRA PERMIT APPLICATION	0
RR	MF	QA BY / DATE	ENGR BY / DATE	CHK BY / DATE	REV BY / DATE	DESCRIPTION	REV NO

REVISIONS
CADCODE ACADR13 CADFILE 97211

PermaFix® environmental services
A Nuclear Services and Waste Management Company

DRWN MKB DATE 11/20/9
CHECKED
DFTG APVD
ENGR JM
APVD
OTHER
QA
APPROVED FOR IMPLEMENTATION
BY
FOR DATE

MIXED WASTE FACILITY
STABILIZATION BLDG.

FUNCTIONAL FLOW DESCRIPTION-LINE 500 ORGANIC LIQUIDS/SOLIDS (~~GASVF~~)

SCALE NONE
DWG NO FIGURE-8
SHEET NO 7 SHEETS 7 REV 1

PERMIT FIGURE NUMBER: NONE

Recycle Copy