PERMIT ATTACHMENT FF

Emergency Preparedness and Prevention – Following Sections of the Permit Application:

Section 2.0	Facility Description
Section 4.0	Bulk Vitrification Test and Demonstration Facility
Section 5.0	Operations Plan
Appendix B	Process Flow Diagrams
Appendix F	ICV® Container Refractory Information

Permit Number: WA 7890008967

The following listed documents are hereby incorporated, in their entirety, by reference into this Permit. Some of the documents are excerpts from the Permittees' DBVS Facility Research, Development, and Demonstration Dangerous Waste Permit Application dated May 10, 2004 (document #04-TED-036); hereafter called the Permit Application. Ecology has, as deemed necessary, modified specific language in the attachments. These modifications are described in the permit conditions (Parts I through V), and thereby supersede the language of the attachment. These incorporated attachments are enforceable conditions of this Permit, as modified by the specific permit conditions.

This page intentionally left blank.

Section 2.0
Facility Description

This page intentionally left blank.

CONTENTS

2.0 FACILITY DESCRIPTION 2-1
2.1 FACILITY SITING 2-1
2.2 PHYSICAL PLANT 2-1
2.2.1 Bulk Vitrification System Components 2-1
2.2.2 Support Systems 2-2
2.3 WASTE CHARACTERISTICS, RETRIEVAL/STORAGE, AND TRANSFER 2-2
2.3.1 Waste Characteristics 2-2
2.3.2 Waste Retrieval and Storage 2-3
2.3.3 Waste Transfer 2-4
2.4 TREATED WASTE PACKAGING 2-4
2.5 NON-REGULATED MATERIALS/SYSTEMS 2-4
2.5.1 Potable Water 2-4
2.5.2 Raw Materials, Process Additives, and Consumables 2-5
2.5.3 Electric Power System 2-5
2.6 SECONDARY WASTES 2-5
2.7 IGNITABLE, REACTIVE, AND/OR INCOMPATIBLE MATERIALS 2-6
2.8 OCCUPATIONAL SAFETY AND HEALTH 2-6

FIGURES

Figure 2-1. Planned Site Location of the Test and Demonstration Facility 2-7
Figure 2-2. Test and Demonstration Facility Site and Equipment Layout - Page 1 2-8
Figure 2-3. Test and Demonstration Facility Site and Equipment Layout - Page 2 2-9
Figure 2-4. Waste Retrieval System for Phase 1 and Phase 2 2-10

TABLES

Table 2-1. Waste Receipt Tank Capacity 2-3

This page intentionally left blank.

2.0 FACILITY DESCRIPTION

2.1 FACILITY SITING

The planned site location for the Test and Demonstration Facility is shown in Figure 2-1. The site is located immediately west of the 241-S Tank Farm in the 200 West Area of the Hanford Site. The wastes planned for treatment are currently stored in Tank 241-S-109; a 2,839,050-L (750,000-gal) SST located in the 200 West Area. The waste from Tank 241-S-109 will be transferred to a waste staging tank and/or waste receipt tank(s) at the planned Test and Demonstration Facility location after pretreatment.

The site is west of the existing 241-S Tank Farm fence in an already disturbed area and will support process and ancillary equipment for the DBVS. The proposed location allows close access to existing electrical and raw water utilities, telephone, and Hanford local area network services. Surface materials consist of soft sand and soil that are free from surface contamination. The site is sufficiently level to provide for equipment placement with minimum grading or excavation. Cooper Avenue, running north-south on the west side of the 241-S Tank Farm, provides ingress and egress to the area.

2.2 PHYSICAL PLANT

The Test and Demonstration Facility (Figures 2-2 and 2-3) will make use of existing infrastructure to the maximum extent possible. Because of the unit-specific installation, operational, and closure needs of the DBVS, some infrastructure elements may be modified, augmented, or added. Potential infrastructure elements include:

- Utilities (water, electric power, sewer, steam)
- Communications (telephone and computer)
- Roadways
- Radioactive material containment
- Hazardous material containment
- Secondary waste storage/transfer systems
- Treated waste storage/transfer systems.

Facility security provisions and signage will comply with applicable portions of WAC 173-303-310.

2.2.1 Bulk Vitrification System Components

The DBVS consists of trailer-mounted and skid-mounted equipment suitable for field installation, operation, and removal at the completion of the project. The system includes the major components, systems, and areas listed below, which are described in detail in Section 4.0.

The general arrangement of the following components for Phase 1 and for Phase 2 (Figures 2-2 and 2-3) includes:

- Waste retrieval system
- Waste staging tank and pumps
- Waste receipt tanks and pumps
- Process additive storage/handling
- Waste feed preparation (mixer/dryer)
- Vitrification container preparation system
- In-container vitrification (ICV®) system
- Electrical equipment
- Offgas treatment system
- Control and data acquisition system
- ILAW storage
- Secondary waste storage and handling (containers or tanks).

2.2.2 Support Systems

Support systems are systems that are required to operate the DBVS, but are not directly involved with the process. The support systems consist of:

- Control station
- Personnel contamination control and survey station
- Personnel rest areas (e.g., lunch room and restrooms)
- Change room
- Safety showers and eye wash stations
- Backup generator.

2.3 WASTE CHARACTERISTICS, RETRIEVAL/STORAGE, AND TRANSFER

2.3.1 Waste Characteristics

The waste in Tank 241-S-109 is stratified. In the bottom of the tank is a layer of sludge. On top of the sludge is a mixed saltcake solid and liquid layer and the top layer is drained saltcake. The salt cake waste is the source waste material for the Test and Demonstration Facility. Some characterization of the waste in Tank 241-S-109 was previously conducted. Characterization results represent the Best Basis Inventory (BBI) for the liquid and saltcake fraction of the tank waste. A detailed discussion of the waste characteristics is located in Section 6.2.

2.3.2 Waste Retrieval and Storage

The retrieval detail for Tank 241-S-109 is presented in RPP-18812, *Tank S-109 Partial Retrieval Functions and Requirements*, and has been submitted to Ecology for approval of the retrieval process.

There will be a difference in the retrieval of waste from Tank 241-S-109 and its transfer to the DBVS between Phases 1 and 2 of the program. During Phase 1, waste from Tank S-109 will be routed through a solids/liquid hydroclone separator and sensing instruments to a staging tank that will hold 3,780 L (1,000 gal) of material (Figure 2-4). The sensing instruments will provide process control or waste characterization information. Staging tank discharge will be pumped to either a DBVS waste receipt tank or, if not suitable for processing in the DBVS, to the DST system.

During Phase 2 the waste will be transferred directly to the waste receipt tanks. The transfer route will go through the solids/liquid hydroclone separator and sensing instrumentation, but bypass the 3,780 L (1,000 gal) waste staging tank (Figure 2-4).

The Test and Demonstration Facility will accept tank waste into waste receipt tanks with capacities shown in Table 2-1.

Table 2-1. Waste Receipt Tank Capacity

Phase	Number of Tanks	Capacity	Total Capacity
1	1	3,780 L (1,000 gal)	3,780 L (1,000 gal)
2	4	68,140 L (18,000 gal)	272,160 L (72,000 gal)

All waste storage tanks and containers including the waste staging tank and waste receipt tanks will be properly and legibly marked in accordance with the requirements of WAC 173-303-395(6). Containers will be managed in accordance with the requirements of WAC 173-303-630. All waste tank systems will comply with the design, installation, and operating requirements of WAC 173-303-640, as applicable. Tank system materials of construction will be selected with appropriate consideration for the corrosion potential of the materials stored and process conditions.

Secondary containment will be provided for all tanks in the form of double-walled tankage or containment structures with sumps. Containment provisions will be designed and constructed for compliance with WAC 173-303-640(4).

During Phase 1, the waste staging tank and waste receipt tank will be double shell tanks or placed in containment structures with sumps (Figures 2-2 and 2-3). For Phase 2, the waste staging tank will be bypassed but will either remain in its structure or be removed and decontaminated in compliance with the Test and Demonstration Facility closure plan (Section 11.0).

2.3.3 Waste Transfer

Waste transfer will be in the form of waterborne salt solution. Waste left in a waste receipt tank at the end of a campaign may be transferred to another tank and mixed with incoming waste for processing. A waste transfer line water flush may be made after each batch transfer of waste feed, as needed. Waste transfer will occur only after verification that all systems are ready for the transfer/receipt of waste. The vitrification station will be located beneath the dried waste hoppers for gravity feed of waste to the container. The mixer/dryer, vitrification, cooldown, and topoff/survey stations will be provided with radiation shielding and spill containment curbs.

Secondary containment will be provided for liquid waste transfer operations in the form of hose-in-hose or pipe-in-pipe transfer lines. Dried waste transfer from the mixer/dryer to the hopper will have secondary containment. Dried waste transfer from the hopper to the container will be conducted inside a removable hood sealed to the container top. Cleanup of spills within the hood will be performed using a containment system.

2.4 TREATED WASTE PACKAGING

Containers of treated waste resulting from the bulk vitrification process will be placed in a dedicated temporary storage area at the Test and Demonstration Facility site (Figure 2-2) during the RD&D permit duration. By generating immobilized treated waste directly in the container, the treatment container also serves as the final disposal container. The storage area will be designed to hold all containers of treated waste generated during the project. The storage area will meet the provisions of WAC 173-303-630(7)(c)(i) and (ii) which are applicable for storage areas that store containers holding only wastes that do not contain free liquids (i.e., the bulk vitrification waste containers):

(i) The storage area is sloped or otherwise designed and operated to drain and remove liquid resulting from precipitation; or

(ii) The containers are elevated or are otherwise protected from contact with accumulated liquids.

All containers, handling procedures, and handling equipment will meet the waste acceptance criteria of the accepting disposal facility. Final disposal of treated waste will be at a permitted Hanford Site facility.

2.5 NON-REGULATED MATERIALS/SYSTEMS

Information provided in the following sections is general in nature and represents the minimum considerations for handling of non-regulated materials. Management of specific materials related to DBVS operation is discussed in Section 4.0.

2.5.1 Potable Water

Water for process use will be transported by tanker truck to the Test and Demonstration Facility. The water source will provide settled river water or potable water. Backflow prevention will be provided to prevent the backflow of potable water to the tanker truck by utilizing an air gap as

the backflow mechanism, or other approved backflow prevention device, as applicable. Backflow prevention devices will be Washington State-certified models accessible for inspection by a water purveyor in a non-radiological zone.

Administrative and engineering controls (e.g., scheduled inspections, containment pads and curbs) will be in place to avoid spillage of water (which could potentially result in the mobilization of contaminants in the vadose zone).

2.5.2 Raw Materials, Process Additives, and Consumables

Raw materials, process additives, and other consumable materials will be stored in tanks, containers, or bulk storage in the Test and Demonstration Facility (Figure 2-2). Storage and delivery systems will be designed to accommodate the ingress and egress of trucks delivering raw materials and consumables. This accommodation may be composed of docks or stockpiles that allow for ease of loading/off-loading of the materials and consumables. Soil storage may be provided by a hopper truck with pneumatic conveying of soil to the DBVS during both phases. For Phase 2, a soil stockpile may be used in lieu of the hopper truck due to the higher usage rate of soil. Refractory sand will be stored in a stockpile for both phases. Other process additives will be stored in containers. The design and location of the loading/off-loading areas will be compatible with existing Hanford Site roadways and/or other roadways added for the planned Test and Demonstration Facility.

2.5.3 Electric Power System

Under normal operating conditions, all electric power for the Test and Demonstration Facility will be obtained from the Hanford Site grid through a local transformer. A backup generator will be located at the site to provide power in the event grid power is lost. The backup generator will have about a 1,200-kilowatt total load rating. The generator will be diesel-powered. A 37,850-L (10,000-gal) diesel fuel storage tank will be provided for the generator drive motor.

The backup generator is capable of powering the Test and Demonstration Facility systems with 480 volt loads on a continuous basis. However, it will be intended only for use in continuous operation of the offgas treatment system, system pumps, the control system, and other electrically-operated equipment needed for a controlled system shutdown in the event of a power outage and achieving full system shutdown until power from the Hanford Site grid can be restored.

2.6 SECONDARY WASTES

A variety of secondary wastes may be generated during the planned project. This section covers general requirements for management of expected secondary wastes. Details are provided in Section 4.0.

Secondary waste streams such as liquid effluent will be disposed of in the Liquid Effluent Retention Facility, the Effluent Treatment Facility (ETF), or the 200 Area Treated Effluent Disposal Facility, as appropriate. Disposition of solid waste streams will be managed in accordance with HNF-EP-0063, *Hanford Site Solid Waste Acceptance Criteria*, and the waste acceptance criteria of the receiving facility, as necessary. Disposition of secondary liquid

effluent waste streams will be managed in accordance with HNF-3172, *Liquid Waste Processing Facilities Waste Acceptance Criteria*, and the acceptance criteria of the receiving facility, as necessary.

Dedicated tanks will be provided for onsite liquid waste storage pending sampling and transfer to a treatment facility. It is anticipated that up to ten 68,140L (18,000 gal) tanks may be used. The actual capacity and number of tanks will be determined during the DBVS project. Tank systems will comply with the applicable portions of WAC 173-303-640.

Storage tank capacity requirements are based on the following assumptions:

- Dryer condensate = 3.40 gpm x 60 min/hr x 7.9 hr/dryer batch x 8 dryer batches ≈ 12,900 gal
- Quench blowdown = 2.39 gpm x 60 min/hr x 168 hr/ICV batch ≈ 24,100 gal
- Tri-Mer Scrubber blowdown[1] = 4.29 gpm x 60 min/hr x 200 hr/ICV batch ≈ 51,500 gal
- Total flow to ETF per ICV container ≈ 88,500 gal per container.

Offgas treatment system equipment designs will comply with the applicable requirements of WAC 173-400, 173-401, 173-460, WAC 246-247, and ASME AG-1, *Code on Nuclear Air and Gas Treatment*. The design of the gaseous and particulate effluent monitoring system will comply with ANSI/HPS N13.1, *Sampling and Monitoring Releases of Airborne Radioactive Substances from the Stacks and Ducts of Nuclear Facilities.* The process equipment will interface with systems that transport secondary waste to appropriate locations.

2.7 IGNITABLE, REACTIVE, AND/OR INCOMPATIBLE MATERIALS

In the course of the RD&D project, it is unlikely that tank waste batches will be received that are incompatible with other materials present in the facility, especially process additives. DOE has identified flammable/toxic gases as a potential waste incompatibility. Incompatibilities will be addressed in DOE safety documentation to comply with WAC 173-303-395. Process knowledge, process history, pertinent literature on waste chemistry and tank history and waste analysis will be used to address the Dangerous Waste Codes D001 (Ignitability), D002 (Corrosivity), and D003 (Reactivity) for the waste before transfer to the Test and Demonstration Facility. Verification sampling to document the absence of characteristic codes will be performed on the first batch of retrieved waste as part of the WRS prior to transfer to the DBVS waste receipt tank.

2.8 OCCUPATIONAL SAFETY AND HEALTH

All buildings, structures, and equipment utilized in the planned project will incorporate design features that comply with applicable subparts of Occupational Safety and Health Administration (OSHA) Regulation 29 CFR 1910, "Occupational Safety and Health Standards."

[1] Only if used as a backup to the SCR.

This page intentionally left blank.

Figure 2-1. Planned Site Location of the Test and Demonstration Facility

OFFICIAL USE ONLY -- IMAGE REDACTED

Figure 2-2. Test and Demonstration Facility Site and Equipment Layout - Page 1

OFFICIAL USE ONLY -- IMAGE REDACTED

Figure 2-3. Test and Demonstration Facility Site and Equipment Layout - Page 2

OFFICIAL USE ONLY -- IMAGE REDACTED

Figure 2-4. Waste Retrieval System for Phase 1 and Phase 2

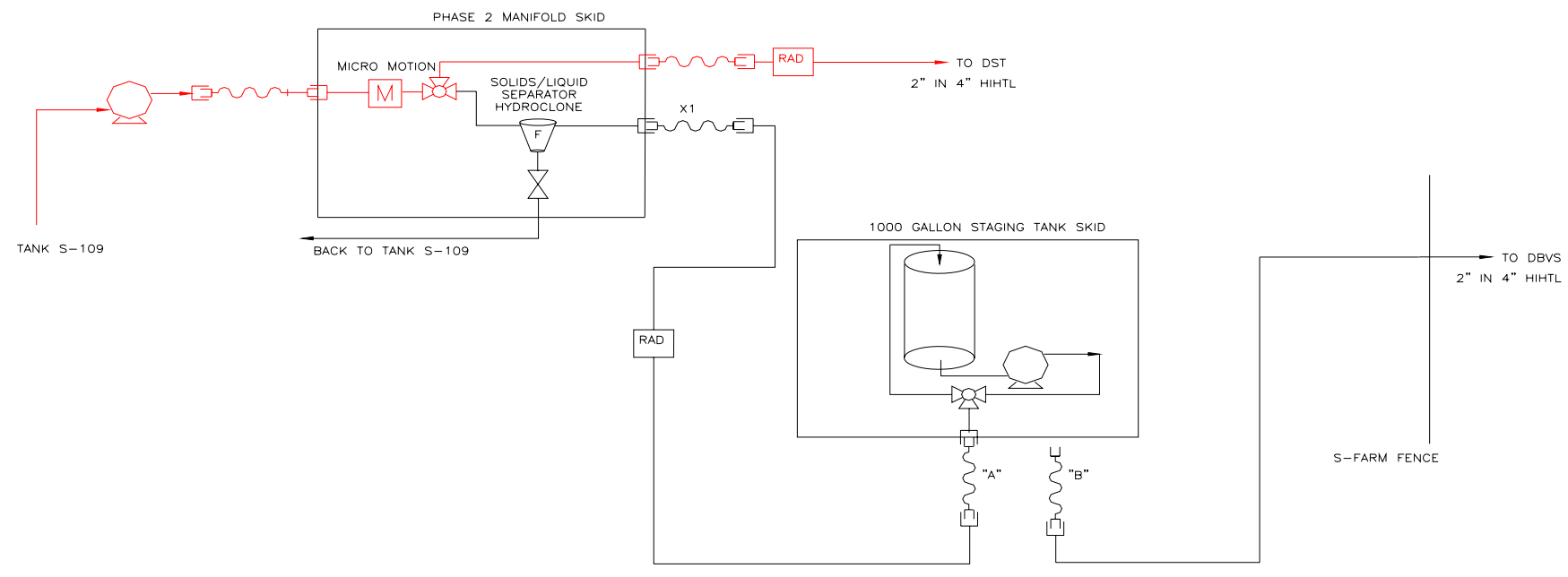

Phase 1 Waste Retrieval System

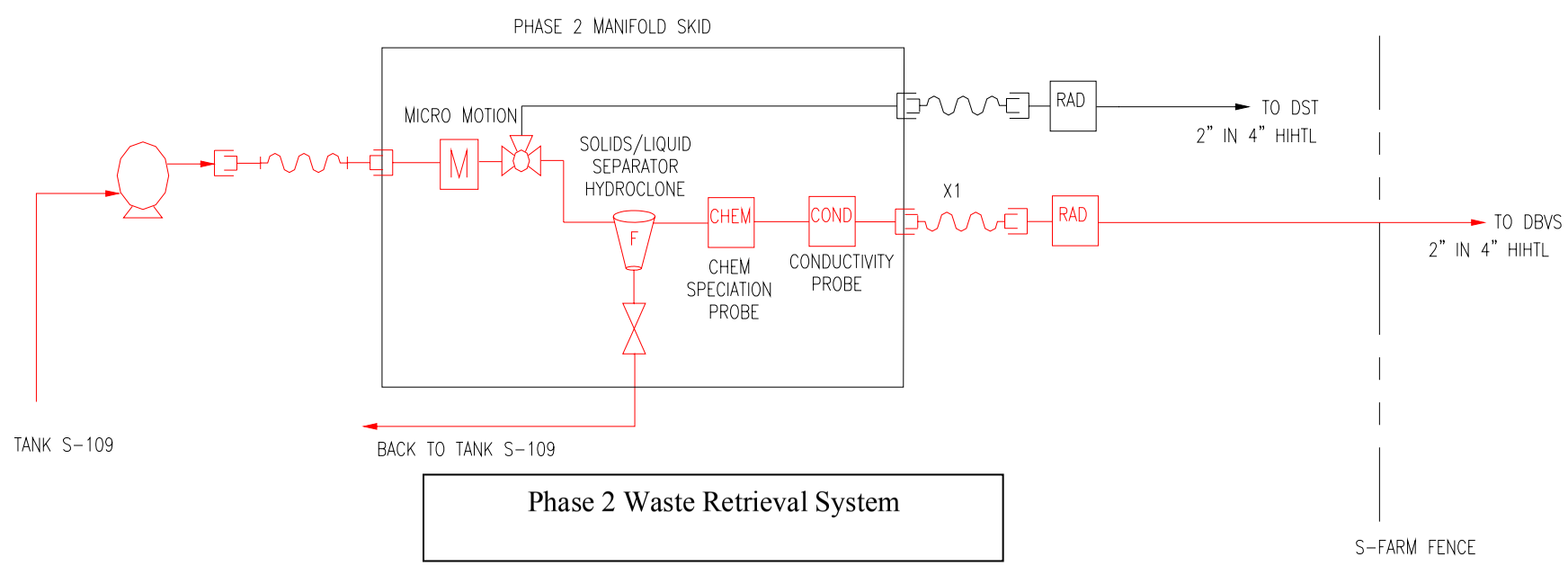

Phase 2 Waste Retrieval System

Section 4.0
Bulk Vitrification Test and Demonstration Facility

This page intentionally left blank.

CONTENTS

4.0 BULK VITRIFICATION TEST AND DEMONSTRATION FACILITY 4-1
4.1 TECHNOLOGY-SPECIFIC GOALS AND OBJECTIVES 4-1
4.2 PROCESS AND EQUIPMENT DESCRIPTION 4-1
4.2.1 System Capacity 4-2
4.2.2 Waste Retrieval System 4-2
4.2.3 Waste Receipt and Storage 4-4
4.2.4 Process Additives 4-5
4.2.5 Dry Material Handling 4-5
4.2.6 Liquid Material Handling 4-6
4.2.7 Gaseous Material Handling 4-6
4.2.8 Waste Feed Preparation 4-7
4.2.9 Vitrification Container Preparation 4-7
4.2.10 In-Container Vitrification 4-8
4.2.11 Post-Vitrification Activities 4-8
4.2.12 Offgas Treatment Requirements 4-9
4.2.13 Process Additive Emissions Control 4-10
4.2.14 Mixer/Dryer Offgas Emissions Control 4-10
4.2.15 Phase 1 Main Offgas Treatment System 4-11
4.2.16 Phase 2 Main Offgas Treatment System 4-12
4.2.17 Control and Data Acquisition System 4-13
4.3 SECONDARY WASTE STREAMS 4-13
4.3.1 General 4-13
4.3.2 Liquid Effluent Secondary Waste Streams 4-13
4.3.3 Solid/Semisolid Secondary Waste Streams 4-14

TABLES

Table 4-1. Process Additives Information 4-6
Table 4-2. Offgas Treatment Component Efficiencies 4-10
Table 4-3. Pollutant Removal Efficiencies 4-11
Table 4-4. Scrubber Blowdown Contaminants 4-12
Table 4-5. Liquid Secondary Wastes 4-14
Table 4-6. Solid/Semisolid Secondary Wastes 4-15

This page intentionally left blank.

4.0 BULK VITRIFICATION TEST AND DEMONSTRATION FACILITY

The DBVS treatment equipment will be installed and operated under two phases as described in Section 1.7.1. The scope and conduct of the phased operation is described in detail in Section 5.0. Unless otherwise stated, the configuration and operation described are consistent with Phase 2 activities.

4.1 TECHNOLOGY-SPECIFIC GOALS AND OBJECTIVES

The primary purpose of testing the DBVS is to fully demonstrate the bulk vitrification process on Hanford tank waste while meeting the project objectives listed in Section 1.5 and assuring protection of human health and the environment. In terms of technology-specific assessment goals and objectives, the DBVS must also demonstrate its ability to perform effectively while:

- Preventing the release of contaminants into the environment during processing
- Preventing exposure of plant operating personnel to hazardous process streams
- Minimizing the production of secondary waste streams.

4.2 PROCESS AND EQUIPMENT DESCRIPTION

The primary technology to be used for the DBVS is an ICV® process. Process flow diagrams for both phases of the RD&D project are provided in Appendix B. Process operation is essentially the same for both phases.

The salt solution is retrieved from Tank 241-S-109, subjected to pretreatment as required (Section 1.7.3), and transferred to the waste receipt tank(s). The waste is mixed with glass formers in a mixer/dryer unit and dried prior to being transferred to the ICV® containers (Section 4.2.8). Transfer of the dried waste mixture is accomplished through ports in the container lid.

The ICV® container is prepared before the waste mixture is transferred to the container. Preparation of the ICV® container includes lining the container with refractory materials that will be selected based on successful testing/operation at the range of process temperatures expected. Refractory material will include cast material and sand as noted in Appendix F. The electrodes are then mounted on the container lid. The lid is lowered onto the container with a refractory gasket sealing the lid to the container, bolted in place, and the offgas ductwork is connected. Once the ICV® container is prepared, the waste mixture is added from the mixer/dryer in batches.

The waste mixture is vitrified by resistive heating caused by electrical resistance of soil and waste. The heating cycle lasts for approximately 130 hours.[1] Vitrification emissions are routed to an offgas treatment system (Section 4.2.12).

After completion of the vitrification process (Section 4.2.11), fill material (e.g., sand) will be added to fill the void container volume and provide a sufficient fill fraction (>90% by volume)

[1] Total container processing time, including waste mixing/drying, container fill, connection hookup, etc., is approximately 168 hours or one operating week.

for container landfill disposal. The vitrified waste will undergo cooling, sampling, and external decontamination as required. Final cooling may occur at designated cooling stations along the process line or at an interim storage location on the Test and Demonstration Facility site. Core samples may be removed through ports in the container for analysis and testing. Test results will be used to support waste form qualification, risk assessment, and performance assessment. A composite core sample (e.g., vitrified material, sand, and refractory material) will be evaluated for compliance with LDR, as noted in Section 6.0.

4.2.1 System Capacity

The feed rate to the mixer/dryer may be varied as one of the parameters being evaluated through this demonstration project. During Phase 1, up to three test runs will be performed to conduct systems verification and initial waste treatment using approximately 1,135 L (300 gal) of tank waste per container. The amount of waste introduced into each container will be varied during Phase 2 in order to investigate the effect of waste loading on processing time, electric power usage, etc. Over the entire series of test campaigns in Phase 2, the average waste material volume used per test will be approximately 58,080 L (15,345 gal) of a 5 M salt solution. However, individual campaigns may be conducted using up to 76,540 L (20,220 gal) of a 5 M salt solution in a container load.

4.2.2 Waste Retrieval System

As noted in Section 2.3.2, the WRS will provide waste feed from Tank 241-S-109 to the DBVS in two distinct phases. During Phase 1, a limited quantity of waste is planned to be provided to the DBVS. During this phase, the quantity of waste will be limited within the facility such that the facility will be classified as below a Hazard Category-3 radiological facility as defined in DOE-STD-1027-92, *Hazard Categorization and Accident Analysis Techniques for Compliance with DOE Order 5480.23, Nuclear Safety Analysis Reports*. During Phase 2, the quantity of waste to the facility will be increased such that the facility will be classified as a Hazard Category-2 facility. The qualitative definition of a Hazard Category-2 facility is that the hazard analysis shows the potential for only significant localized consequences.

During Phase 1, waste transfer will occur through a Waste Staging Tank Skid, which will include the following safety features:

- Leak detection - The skid will perform a secondary containment role. If there are any leaks in the staging tank, piping, fittings, etc, within this skid, the skid will contain the leak. A leak detection sensor located on the floor of the skid will detect the leak and activate an alarm system. Any material leaked into the skid will be routed back to either Tank 241-S-109 or to the DST system.
- Waste staging tank ventilation - The waste staging tank and the containment structure will be “passively vented“ to atmosphere through high-efficiency particulate air (HEPA) filter(s).
- Tank overflow protection - A tank overflow detector will be provided, with remote indication that the tank level has been exceeded. An overflow line will also be provided to direct the overflowing waste to the floor of the skid. As mentioned above, if this

"faulted condition" occurs, the leak detection system will identify the situation and waste transfer operations can be stopped.

- Sampling port - A sampling port will be provided on the top of the waste staging tank to allow waste samples to be withdrawn from the tank for analysis.
- "Bad batch disposal"- If the waste staging tank's contents are found not to be within the acceptable specification for acceptance to the DBVS, the waste batch will be sent to the DST system. The waste retrieval pump can be valved to send out-of-specification waste back into the transfer line to Tank 241-S-109, and via the 3-way valve in the pump pit, to the SY Farm Waste Retrieval Receiver Tank.

4.2.2.1 Phase 1 Activities. During Phase 1, waste from Tank 241-S-109 will be sent to a double-wall staging tank that will hold 3,780 L (1,000 gal) of waste. A retrieval pump will be used to remove waste from Tank 241-S-109 and transfer it to the staging tank. It is anticipated that the waste transfer pump will be a jet pumping system similar to the ones used for saltwell pumping on the Hanford Site and that the transfer rate will be between 19 L/min and 28 L/min (5 - 10 gpm). The pump, solids/liquid separator, and the sensing systems noted in the following paragraphs will be located in a pump pit containment structure adjacent to Tank 241-S-109.

The pump suction will be screened to prevent entrainment of solid particles in the pump inlet stream. The pump discharge will be routed through a solids/liquid hydroclone separator capable of reducing the waste stream solids content to 3% or less. Hydroclone separator devices use a tangential inflow to a vertical cylindrical vessel creating a spiral flow path for the liquid, using centrifugal forces to remove solid particles from the flow stream and move them outwards to the vessel walls. The dispersed particles move downward under gravity into a cone-shaped collection chamber, while the purified liquid moves upward to the center of the unit to a top mounted outlet. The unit is usually equipped with an airlock on the collection chamber to maintain pressure drop across the unit without drawing in ambient air. This filtration system will have the capability to be flushed back to Tank 241-S-109 and/or be replaced, if the differential pressure across it exceeds the allowable value.

From the solids/liquid hydroclone separator, the filtered waste will be monitored by sensing instruments to provide process control over waste transfer or waste characteristic information. Waste transfer process control will be based on the results of waste sampling and analysis. The proposed instruments to be included in this system are:

- A flow meter capable of indicating the specific gravity and flow rate of the waste.
- A chemical speciation probe.[1] This is an experimental device being developed by Pacific Northwest National Laboratory that will utilize Raman technology to provide scientific information on the chemical speciation of the waste.
- A conductivity probe. This device will provide information on the waste conductivity. The conductivity probe is planned to be a process control device.
- An optional gamma radiation monitor.

[1] Due to the experimental nature of this probe, it will not be used for regulatory compliance purposes.

A three-way valve will direct waste to either the waste staging tank or, if the waste does not meet the waste acceptance criteria noted in Section 6.0, to the DST system for storage and eventual disposal. The waste transfer piping from pump pit to either of these locations will be through a hose-in-hose-transfer line (HIHTL) and will be equipped with an optional on-line radiation monitoring system which will continuously measure the quantity of Cs-137 being transferred through the HIHTL.

Initial waste retrieval during Phase 1 will direct waste to the DST system. CH2M HILL Process Engineering personnel will monitor the transfer data, while waste is being sent to the SY tank farm and determine when to route the waste stream to the waste staging tank. When the waste characteristics are deemed acceptable for processing, the three-way valve in the pump pit will be positioned to send waste to the waste staging tank.

The waste staging tank will have only one inlet/outlet combination. While transferring waste from Tank 241-S-109 to the waste staging tank, the tank will be connected to Tank 241-S-109 via a HIHTL. With this design, the system is physically disconnected from the DBVS facility when the waste staging tank is being filled with waste. Once the waste staging tank is filled the waste batch is characterized. When it has been verified that the waste meets the DBVS waste acceptance criteria the HIHTL connecting the waste staging tank and Tank 241-S-109 will be disconnected. The HIHTL from the DBVS facility will then be connected to the same connector on the waste staging tank. The contents of the waste staging tank will then be pumped to the DBVS receiver tank, via this HIHTL that will exit the farm, go under Cooper Avenue, and mate up with a receiver skid at the DBVS facility.

If analysis of tank contents determines that the waste batch is not acceptable for processing, it will be routed to the DST system.

4.2.2.2 Phase 2 Activities. During Phase 2, the "segmentation" concept from Phase 1 will no longer be required since the DBVS Facility will be a Hazard Category-2 facility. Waste transfer rates will be increased to an anticipated 76 L/min (20 gpm). The waste tank can, and will be, directly connected to the DBVS facility. The transfer route from Tank 241-S-109 to DBVS will bypass the waste staging tank skid. The solids/liquid separator and the sensing instrumentation will be retained but the solids/liquid separator capacity will be increased to accommodate the increased waste flow rate.

4.2.3 Waste Receipt and Storage

The WRS transfers waste into waste receipt tank(s) for process feed, storage, and sampling. The waste received will be stored in tanks as noted in Table 2-1. Tank capacities are based on anticipated waste processing rates described in Sections 1.7.5 and 4.2.1. All waste storage tanks will be double-wall construction with HIHTL and leak detection provisions. Waste tanks will be vented through the offgas treatment system (Sections 4.2.15 and 4.2.16).

A single 3,780-L (1,000-gal) waste receipt tank will be used during Phase 1 because the total amount of waste treated in the initial campaigns will be minimal. The use of a small tank will limit the amount of waste stored during Phase 1 to an amount below Hazard Category-3 requirements.

At the completion of Phase 1, the 3,780-L (1,000-gal) storage tank may be retained and used for storage of process additives such as simulated waste materials (simulants) or spiking agents during Phase 2 if allowed after flushing and inspection to clean debris standards. Additional waste receipt tanks (Section 2.3.2 and Table 2-1) will be installed for Phase 2. The additional tanks will be installed so that one or more tanks can be used to provide waste feed for treatment while the other tanks are being filled and sampled as described in Section 6.0. In order to ensure that a consistent feed rate of waste material is delivered to the treatment system, each waste receipt tank is sized so that its contents are sufficient to supply more than the anticipated waste demand rate to the DBVS.

4.2.4 Process Additives

The DBVS will use soil, waste simulants, glass additives, offgas treatment chemicals, and other materials as process additives. Table 4-1 contains a summary of these materials, their storage methods, and uses. Soil will be used to form the matrix for the vitrification process and to add an additional layer of clean material on the vitrified mass in the container. Waste simulants will be used for running system verification tests prior to treatment of actual SST waste during Phase 1 and as “filler” to attain the required process material volume (waste plus simulant) for a given test campaign during testing in both phases. Waste simulants could include spiking agents for specific process performance testing purposes. The majority, estimated at seventy-five percent (75%) of simulants will be used in Phase 1. A 68,140-L (18,000-gal) double-wall tank will be used for simulant storage during this phase. This tank may be retained onsite for use as one of the waste storage tanks for Phase 2 operations or may be removed from the site at the completion of Phase 1. Process additives will be kept in dedicated storage areas segregated from regulated waste storage to minimize the possibility of contamination. Residual simulant material not used in Phase 2 will be analyzed for dangerous waste characteristics and, if designated as dangerous waste, will be managed in accordance with standard Hanford Site procedures.

Graphite will be placed in the vitrification container to help initiate the soil/waste melting process. Boron and zirconium will be used in small quantities (approximately 2,100 kg (4,630 lbs) and 3,000 kg (6,615 lbs) per container load, respectively) to optimize glass performance. Sand will be used as an insulator.

4.2.5 Dry Material Handling

Dry materials will be stored and either conveyed or transferred in bulk from various process staging areas to equipment within the DBVS. Depending on the material characteristics and the amounts used, the additives may be stored in tanks, containers, or in bulk (stockpiles) compliant with applicable regulatory requirements.

During Phase 1, the amount of soil required for the vitrification matrix will be limited. The soil will be stored in an onsite hopper for pneumatic conveying to the treatment system. A similar arrangement may be provided for Phase 2, or, depending on the soil usage rate, a stockpile may be maintained. The loading point for soil into the treatment system will be equipped with parallel storage silos and a baghouse air pollution control system. For stockpiles, engineering controls for dust suppression will be implemented.

Table 4-1. Process Additives Information

Additive	Form	Storage Method	Use	Point of Introduction
Soil	Solid	Hopper (Phase 1) Hopper stockpile (Phase 2)	Vitrification matrix, container topoff	Dryer
Sand	Solid	Stockpile	Insulating material	ICV container
Waste simulants	Solid/slurry	Tank	Waste material substitute; "spiking agents"	Waste receipt tank, dryer
Graphite	Solid	Containers	Vitrification aid	ICV container
Boron	Solid	Containers	Glass performance aid	Dryer
Zirconium	Solid	Containers	Glass performance aid	Dryer
Water	Liquid	Tank	Air pollution control	Quench unit, venturi scrubber, Tri-Mer scrubber
Ammonia	Gas	Pressurized tanker	Air pollution control	Selective catalytic reduction
Sulfuric acid	Liquid	Containers	Air pollution control	Tri-Mer scrubber
Sodium chlorate	Liquid	Containers	Air pollution control	Tri-Mer scrubber
Sodium sulfide	Liquid	Containers	Air pollution control	Tri-Mer scrubber
Sodium hydroxide	Liquid	Containers	Air pollution control	Tri-Mer scrubber

4.2.6 Liquid Material Handling

Liquid materials other than waste feed will be used during DBVS operations. These include water and scrubbing chemicals. Water will be provided directly from tanker trucks. Other liquid material used will either be stored in portable tanks or in containers (e.g., carboys, drums) depending on the material handling requirements and/or the quantity used. Materials stored in portable tanks will be replenished either by removal and replacement of the tank or refilling from a tanker. Liquid chemical storage areas will be provided with suitable spill containment provisions.

4.2.7 Gaseous Material Handling

As an integral part of a best available control technology program, ammonia will be used as an air pollution control aid for removal of oxides of nitrogen (NO_x). The gas will be supplied from

a pressurized liquid ammonia tanker truck. Ammonia will be vaporized and injected into the offgas stream to ensure proper mixing and efficient NO_x scrubbing.

4.2.8 Waste Feed Preparation

Before the vitrification process begins, the waste material will be mixed with additives and dried to remove moisture in a batch-mode rotary mixer/dryer. The unit will be indirect-heated by steam from a diesel-fired onsite boiler. The boiler is a closed-loop system. Waste material will be pumped from waste receipt storage tanks. Appropriate additives will be conveyed or transferred to the unit. The dry material transfer systems will be equipped with weigh stations to control the amount of material being added to the dryer.

The mixer/dryer fill capacity for waste salt solution and process additives is 10,000 L (2,645 gal) at a nominal fill fraction of 45 to 50% (48.4% is the measured fraction from testing). The nominal drying cycle time is eight hours but may be as short as six hours for relatively dry incoming waste. During the mixing/drying cycle, the unit will be maintained under vacuum to promote the release of moisture from the material being processed at a reduced temperature. The moisture content of the material will be monitored by a load cell on the unit (noting the weight of moisture removed) and a moisture sensor in the exhaust duct. Discharge of dried material to the waste container will be vacuum transferred to feed hoppers and then gravity fed through an enclosed chute with shutoff valves. The amount of waste transferred will be determined from mixer/dryer load cell readings.

Mixer/dryer offgases will be treated to remove moisture before being routed to the main offgas treatment system for additional emission control.

4.2.9 Vitrification Container Preparation

The typical waste container for the vitrification process is expected to be a steel box approximately 3.0 m (10 ft) high, 2.4 m (8 ft) wide, and 7.3 m (24 ft) long. Containers will comply with the waste acceptance criteria for the receiving TSD unit (a permitted Hanford Site facility). Prior to waste distribution, the container will be lined with insulating board, sand, and a layer of castable refractory. The castable refractory (Appendix F) will face the waste material. A layer of melt-initiating graphite and soil will be placed over the castable refractory in the bottom of the container. The container will contain a port(s) for sampling the vitrified waste to obtain samples for analyses listed in Section 6.0.

A steel lid with attached electrodes will be sealed onto the container prior to waste deposition using bolted flanges and a refractory gasket. The lid contains several ports for waste material addition, electrode connections, venting, sampling, and introduction of post-vitrification materials. All connections will be mechanically sealed to the container lid. In addition, waste transfer connections will be equipped with shutoff valves to prevent spillage of material as the chute is attached to and removed from the port. To minimize potential contamination to workers and the environment, the connection points will be equipped with secondary containment and spilled material recovery equipment during material transfer, melting, and cooldown. Containment will consist of a ancillary waste transfer enclosure (AWTE) that seals to the container lid before waste is added to the container. The AWTE provides containment while the

waste and soil addition connections are made and during the melt process. The operator is able to access the waste and soil addition connections through glove ports in the AWTE. Once the melt is complete and the container is cool enough to add clean soil on the top, the AWTE will be removed to allow the container to move to the temporary storage area. The waste container filling/vitrification station will be equipped with shielding, as required.

4.2.10 In-Container Vitrification

The waste mixture, including simulants and glass formers, from the mixer/dryer will be placed into the vitrification container through ports in the sealed container lid. Electric power will be applied to the electrodes, vitrifying the container contents via resistive heating to produce ILAW. The ILAW is the final RCRA waste form for disposal. Ambient air, filtered through a HEPA filter, is injected to assist in establishing and maintaining airflow through the container to the offgas treatment system, cool the vitrification offgases, and provide thermal protection for HEPA filters in the offgas treatment system. Vitrification offgases are vented under induced draft to the offgas treatment system. During the vitrification process, the depth of material will typically decrease due to consolidation in melting.

Both “bottom-up” and “top-down” melting may be conducted during testing to determine the most effective method of waste treatment. The current plans focus on the bottom-up melt procedure; however, there may be a need to perform top-down melting at some time during the testing process. Top-down melting is conducted by applying power to the electrodes only after all waste materials and process additives have been placed in the container. Bottom-up melting begins melting with a shallow layer of material in the container and continues as more material is added until the desired depth of melt is obtained.

4.2.11 Post-Vitrification Activities

After vitrification has been completed, the container connection to the offgas treatment system will be maintained. Clean fill materials will be added to fill cavities around the electrodes and cover the top of the vitrified mass to minimize headspace in the container, creating a container that is at least 90% full.

Sampling of the vitrified waste, radiation surveying, and external decontamination (container wipedown, vacuuming of dust, etc.), as necessary, can be conducted any time after initial cooling has been completed. Sampling of the melt will be conducted by a coring process through a port in the side of the container. The method of sealing the sampling port during and after sampling has not been finalized. However, the port will be sealed in such a manner that the container remains in compliance with the RD&D Permit and the permitted storage/disposal facility waste acceptance criteria. Sampling protocol and methodology is addressed in Section 6.0. The data obtained will be used for waste form qualification, risk assessment, and performance assessment.

Temporary storage for up to 50 treated waste containers will be located at the north end of the Test and Demonstration Facility (Figure 2-2). At the completion of RD&D activities, the containers will be transported to the IDF or to another permitted Hanford Site storage/disposal facility.

4.2.12 Offgas Treatment Requirements

Emissions may consist of either fugitive (i.e., bulk process additive loading and transfer) or point (i.e., stack) sources. Hazardous or radioactive emissions will not be released through fugitive sources, as those sources will be limited to nonhazardous and nonradioactive materials. Emission calculations for all sources will utilize appropriate emission factors, source classification codes, or other information. Fugitive emissions, which will consist only of nonhazardous materials such as dust from process additive transfers, will be addressed in the *New Source Review Notification of Construction for the Supplemental Treatment Test and Demonstration Facility (*Schepens 2004*).*

Point sources may emit both nonradioactive and radioactive emissions. These sources will be equipped with a continuous emissions monitoring system (CEMS) that will monitor and record emissions of radionuclides (beta and gamma detectors) and those criteria pollutants (e.g., particulate matter, carbon monoxide [CO], NO_x, and oxides of sulfur [SO_x]) for which regulatory monitoring requirements exist and are included in the final emission source permit(s)). The CEMS will be designed, installed, and operated in compliance with applicable portions of 40 CFR 60, Appendix B. The design of the gaseous and particulate effluent monitoring system will comply with ANSI/HPS N13.1, *Guide to Sampling Airborne Radioactive Materials in Nuclear Facilities.* The CEMS data will be acquired in real time, but will be available for review in the form of periodically generated reports. Offgas treatment for DBVS operations will address the following issues:

- Particulate and gaseous emissions from waste receipt and storage
- Particulate emissions from process additive receipt, storage, and transfer (not including fugitive emissions from stockpiles)
- Particulate and gaseous emissions from mixer/dryer (dedicated partial system)
- Particulate and gaseous emissions from waste container filling and vitrification
- Particulate emissions from waste container topoff after vitrification.

All offgas treatment system connections to treatment equipment and the waste container tops will be sealed and the offgas ducting maintained under induced draft to prevent escape of pollutants.

With the exception of process additive management emissions, all emissions will be routed to an offgas treatment system prior to discharge to the atmosphere. Nominal efficiencies and the major pollutant controlled by the various offgas treatment system components used are provided in Table 4-2. Table 4-3 contains calculated removal efficiencies for major pollutants. Removal efficiencies were calculated using the Table 4-2 component efficiencies and the offgas treatment system arrangement in Appendix B. Appendix B contains additional information on the offgas treatment system components and efficiencies.

Table 4-2. Offgas Treatment Component Efficiencies

Component	Nominal Control Efficiency					
	Water/ Water Vapor	Organic Compounds	HCl	NO_x	SO_x	Particulate[1]
Baghouse	—	—	—	—	—	99%
Condenser	95 – 98%	50%	<10%	<10%	<10%	—
Mist Eliminator	10 – 25%	—	—	—	—	—
Sintered Metal Filter	—	—	—	—	—	99.5%
HEPA Filter	—	—	—	—	—	99.95%
Quench System	10 – 25%	10%	10%	10%	10%	10%
Packed Tower Scrubber (optional)[2]	—	90%	93%	93%	93%	<50%
Venturi Scrubber	—	25%	25%	25%	25%	95%
Selective Catalytic Reduction Unit(s)	—	—	—	99%[3]	—	——
Carbon Filter	—	95 – 99%	25%	25%	25%	—

[1] Particulate removal efficiencies are for ten-micron (10 μ) particle diameters and up. Removal efficiencies are based on AP-42 (EPA 1995), Appendix B.1, reference texts and process knowledge

[2] Efficiency range varies with pollutant adsorbed

[3] The selective catalytic reduction design goal is 99% efficiency

4.2.13 Process Additive Emissions Control

Particulate emissions from offloading and transfer of process additives will be controlled by dedicated baghouse and vent systems. A covered hopper with a sealed pneumatic conveying system will be used to transfer soil to the mixer/dryer soil holding tank or silos. Particulate matter collected at the baghouses is returned to the appropriate additive storage area for reuse.

4.2.14 Mixer/Dryer Offgas Emissions Control

The mixer/dryer emissions will be partially treated for moisture removal using a glycol-cooled condenser and mist eliminator prior to being routed to the main offgas treatment system. The partially treated offgases from this system will then be routed to the main offgas treatment system downstream of the chemical/venturi scrubber. Water condensed in the condenser and removed in the mist eliminator will be routed to a storage tank for sampling and subsequent treatment or disposal. Estimated rates and volumes of liquid secondary wastes generated from offgas emissions control system operations are provided in Section 2.6.

Table 4-3. Pollutant Removal Efficiencies[1]

Pollutant	Nominal Control Efficiency
Moisture	96%
Organic Compounds	98%
HCl	55%
NO_x	99.95%
SO_x	<50%
Particulate Matter	>99.9999%

[1] Based on arrangement of offgas treatment system components in Appendix B process flow diagrams

4.2.15 Phase 1 Main Offgas Treatment System

The Phase 1 offgas treatment system will consist of two stages of sintered metal particulate filters, a glycol-cooled condenser, a quench section, one of two redundant atomizing chemical scrubber/venturi scrubber, mist eliminator system, additional stages of HEPA filtration and up to two independent NO_x treatment devises.

Offgas from the melting process first passes through two stages of sintered metal particulate filtration. The purpose of the filters is to minimize radioactive contamination of downstream components to facilitate maintenance and operations. Dust collected from the sintered metal filters is recycled to the mixer/dryer. Dust from the final batch will be incorporated into the mixer/dryer where a final container using clean fill material will be processed to flush the system, and sent to the IDF or another permitted disposal facility. HEPA filters later in the system backup the sintered metal filters ensuring the particulate emissions are minimized.

After the sintered melt filters, the offgas passes through one of two redundant quenchers that cools the gas prior to introduction into the atomizing chemical scrubber/venturi scrubber. Either quencher can quench 100% of the offgas stream. In addition to quenching the offgas, the quencher augments the ability of the system to remove particulate matter and gaseous pollutants. Although this augmentation is not credited, it provides additional redundancy or capability to the offgas system.

Following the quencher, offgas is introduced into one of two redundant atomizing chemical venturi scrubbers. The atomizing chemical venturi scrubbers will be installed in parallel, with one in service and the other on standby. Either of the two atomizing chemical venturi scrubbers can scrub 100% of the offgas stream. Dilute sodium hydroxide will be injected in the atomizing scrubber section to reduce hydrogen chloride and other acid gas emissions. In addition to scrubbing hydrogen chloride and other acid gas emissions from the offgas, the scrubber augments the ability of the system to remove particles and NO_x. This augmentation is not credited but occurs nonetheless and provides additional redundancy or capability to the offgas system.

Following the atomizing chemical venturi scrubber, offgases will pass through an additional condenser and one of two redundant mist eliminators, with drainage from those units routed to the scrubber recycle tanks. Condensed liquids are drained into the scrubber recycle tank. An offgas heater, parallel HEPA filters, and a carbon filter for radioactive iodine removal will follow the mist eliminator.

NO_x treatment will be accomplished by a selective catalytic reduction (SCR) unit with a Tri-Mer packed tower scrubber as a back-up system. The packed tower unit consists of a quench unit and five towers in series that sequentially convert oxides of nitrogen to molecular nitrogen (N_2) by reduction reactions with chemical reagents (H_2SO_4, $NaClO_2$, NaS, and NaOH). Offgases will be discharged through a HEPA polishing filter, redundant exhaust blowers in parallel, and the system stack.

Reagents for the packed tower scrubber will be selected based on chemical species anticipated to be present in the offgases. Blowdown from the scrubber recycle tank will be sampled and routed to the ETF or other permitted Hanford Site facility for treatment and disposal.

Venturi scrubber blowdown contaminant types and their weight fractions/concentrations are provided in Table 4-4. If in service, the Tri-Mer packed tower will be used for only a portion of the vitrification cycle. Packed tower scrubber blowdown, also in the form of a continuous bleed stream, will be 16 L/min (4.29 gpm) and will produce approximately 194,950 L (51,500 gal) over the processing of a single waste container. Packed tower scrubber blowdown will consist of a sodium salt solution containing sulfates, sulfuric acid, sodium chlorite, sodium sulfide, sodium sulfite, sodium hydroxide, nitrates, and nitric acid. Carbon filters will be modular units rather than refillable contactors. Upon reaching saturation, the units will be removed, sampled, and disposed.

Table 4-4. Scrubber Blowdown Contaminants

Contaminant	Concentration
Sodium Hydroxide (NaOH)	2 % by weight
Sodium Nitrate ($NaNO_3$)	13 % by weight
Sodium Carbonate (Na_2CO_3)	2.5 % by weight
Sodium Sulfite (Na_2SO_3)	0.5 % by weight
Sodium Chloride (NaCl)	0.02% by weight
Sodium Fluoride (NaF)	4 ppm by volume
Cs-137	Trace

4.2.16 Phase 2 Main Offgas Treatment System

It is not expected that any enhancements of the offgas treatment system will be required between the end of Phase 1 and the beginning of Phase 2. However, if the Phase 1 offgas treatment system performance does not meet expectations, modifications to the system will be made. The packed tower scrubber may be used to allow the option of routing of exhaust gases either through

the SCR(s) or the tower scrubber to determine the effect on both scrubbing efficiency and scrubber blowdown rates.

4.2.17 Control and Data Acquisition System

The DBVS control system and the associated data acquisition systems will be located in a trailer as shown in Figure 2-2. Some operating parameters may be monitored and operating steps may be performed manually as opposed to remotely. Personnel safety and ALARA considerations will require that many of the operations directly related to the process (mixer-dryer, melt station) be monitored and performed remotely. Other operations such as operation of the utilities, secondary waste, SCR, etc, will have key parameters monitored remotely while other monitoring and operating steps are manual. Both RD&D experiment data (process operating conditions) and offgas emissions data will be acquired.

4.3 SECONDARY WASTE STREAMS

4.3.1 General

All Test and Demonstration Facility secondary waste streams (i.e., any output stream other than the treated DBVS waste) will be managed in accordance with the *Hanford Site Liquid Waste Acceptance Criteria* (HNF-3172) or *Hanford Site Solid Waste Acceptance Criteria* (HNF-EP-0063) and the receiving TSD unit waste acceptance criteria for the treatment and/or disposal path for each stream. A waste minimization program for secondary wastes will be implemented. Shipments of waste to offsite treatment or disposal facilities are not anticipated. However, should they occur, these shipments will be conducted in compliance with WAC 173-303-280(1).

Nonradioactive nonhazardous waste streams include air pollution control equipment dusts from process additive transfer, used baghouse filters, empty process additive containers, and damaged/failed equipment. These waste materials will be managed as general solid waste per *Hanford Environmental Protection Requirements* (HNF-RD-15332).

4.3.2 Liquid Effluent Secondary Waste Streams

The Test and Demonstration Facility will produce the liquid secondary wastes noted in Table 4-5. The secondary waste stream will be sampled and analyzed prior to being routed to the ETF or other facility for treatment. Sampling and analysis will be performed in accordance with the waste acceptance criteria of the receiving disposal facility. Secondary wastes will be collected either continuously or at scheduled intervals and stored at the Test and Demonstration Facility in 68,140-L (18,000-gal) double-wall tanks. Up to 10 liquid effluent storage tanks may be onsite at the Test and Demonstration Facility at a given time, depending on the rate of waste generation and the duration of sampling and analysis. Sampling and analysis procedures are noted in Section 6.0. When a tank is filled, its contents will be sampled and the waste will be transported to the ETF. If required, wastes will be filtered prior to shipment to ETF. If the waste does not meet ETF waste acceptance criteria, it will be sent to a DST or other approved Hanford Site storage facilities.

Tank construction will meet the requirements of WAC 173-303-640 and will be equipped with freeze protection consistent with Performance Category-2 (ambient temperature of 34°C [30°F]).

Table 4-5. Liquid Secondary Wastes

Waste	Source	Frequency of Generation	Pollutants
Washdown Water	Equipment Cleaning, Spill Remediation	Recurring (Equipment Cleaning) Infrequent (Spill Remediation)	Particulate Matter, Radionuclides, Caustic (high pH) Solution
Boiler Blowdown	Boiler Maintenance	Infrequent	Particulate Matter, Boiler Antifouling Agents, Surfactants
Mixer/Dryer Condenser, Mist Eliminator Drainage	Mixer/Dryer Offgas Condenser, Mist Eliminator Operation	Recurring (Scheduled Holding Tank Discharge)	Particulate Matter, Radionuclides
Scrubber System Blowdown or Bleed	Main Offgas Treatment System Operation	Recurring (Scheduled Scrubber Holding Tank Blowdown) Continuous (Scrubber Holding Tank Bleed)	Particulate Matter, Radionuclides, Caustic (high pH) Solution, Dissolved Inorganic Gases, Dissolved Acid Gases, Organic Compounds

4.3.3 Solid/Semisolid Secondary Waste Streams

The Test and Demonstration Facility will produce the solid, semisolid, or sludge secondary wastes noted in Table 4-6. Unless otherwise stated, these wastes will be collected on a scheduled basis and disposed in permitted facilities. Wastes that will routinely be returned to process use, such as spilled nonhazardous process additives, are not included in this list.

Table 4-6. Solid/Semisolid Secondary Wastes

Waste	Source	Frequency of Generation	Pollutants
Spent Carbon Filters	Main Offgas Treatment System	Scheduled or Upon Detection of Pollutant Breakthrough	Particulate Matter, Radionuclides, Organic Compounds
Spent HEPA Filters	Mixer/Dryer Offgas Treatment System, Main Offgas Treatment System, ICV® Purge Air Inlet	Scheduled	Particulate Matter, Radionuclides, Organic Compounds
Spent SCR Catalyst	Main Offgas Treatment System	Scheduled or Upon Detection of Catalyst Fouling/Poisoning	Particulate Matter, Radionuclides, Organic Compounds
Scrubber Tank Sludge	Main Offgas Treatment System	Scheduled or Upon Detection of Excessive Buildup	Inorganic Solids, Water Containing High or Low pH Inorganic Compounds, Radionuclides, Caustic (high pH) Solution, Organic Compounds
Used Personal Protective Equipment	Equipment Cleanup, Maintenance, and Operation	Recurring	Particulate Matter, Radionuclides
Failed/Damaged Equipment	Equipment Cleanup, Maintenance, and Operation	Recurring	Particulate Matter, Radionuclides

This page intentionally left blank.

Section 5.0
Operations Plan

This page intentionally left blank.

CONTENTS

5.0 OPERATIONS PLAN 5-1
5.1 OPERATIONS OVERVIEW 5-1
5.1.1 General 5-1
5.1.2 Operating Parameters 5-1
5.2 TEST PLAN 5-2
5.3 OPERATOR PREPARATION 5-3
5.4 DATA ACQUISITION 5-3
5.5 CAMPAIGN DURATION 5-3
5.6 SYSTEM OPTIMIZATION 5-3
5.7 NORMAL OPERATIONS 5-4
5.8 UPSET CONDITIONS 5-4
5.9 EMERGENCY CONDITIONS 5-5
5.10 EMISSION SAMPLING 5-5
5.11 REPORTING 5-5
5.12 EQUIPMENT OPERATING CONSIDERATIONS 5-5

FIGURES

Figure 5-1. Test Parameter Relationships 5-6

This page intentionally left blank.

5.0 OPERATIONS PLAN

Operation of the DBVS during the RD&D project will be conducted in two phases. During the first phase, up to three container loads of waste will be processed. During the second phase, approximately 47 to 49 container loads will be processed. The total number of containers processed for both phases is expected to be approximately 50. This section presents the general operating plan for both phases.

A campaign is defined as the receipt, processing, and vitrification of waste in a single container. A campaign may contain more than one vitrification cycle (i.e., a half-full container is vitrified under a set of parameters and another vitrification cycle is conducted in the remaining half of the container after cool-down to determine the effect on glass characteristics of multiple vitrification cycles). Another potential cause of a less than full container would be problems with the mixer/dryer or other equipment while the melt is in process. In this case, once the equipment problems were resolved, the melt could be resumed and the box filled to normal levels with waste. Each campaign will be conducted in accordance with a test plan.

5.1 OPERATIONS OVERVIEW

5.1.1 General

This section describes the parameters under which a campaign will be conducted. The previous testing programs (AMEC 2003) were performed at various scales using simulants to develop baseline operating envelopes for treatment of waste materials and to more closely define the range of acceptable system performance. It is anticipated that the processing conditions developed as a result of the RD&D project will be used as baseline conditions for full-scale system design and operation.

5.1.2 Operating Parameters

During each campaign, waste material will be treated under a fixed set or range of process conditions to determine the optimum set of vitrification parameters that will produce acceptable treated waste while protecting human health and the environment. Three types of test parameters have been identified:

- Waste characteristics – Characteristics of the waste material that are likely to be encountered during DBVS waste treatment and that may influence processing results.
- Process parameters – Process settings or methods that can be adjusted to optimize quality of the treated waste or to investigate specific aspects of process performance.
- Process additives – Variations in the composition or characteristics of process additives and their effect on the vitrification process.

Figure 5-1 is a graphical representation of the types of parameters and their overall relationships. The dark portion of the diagram represents the zone where test points will initially be selected. The values selected for each parameter type will be those that will produce acceptable treated waste. It is possible that the optimum processing conditions will fall outside the initial range of parameter values selected.

Boundary ("operating envelope") values for optimized operating parameters will be determined in the initial portion of Phase 2 and additional campaigns will be conducted within that phase until optimized conditions have been determined.

The initial test parameter values (or settings) will be selected prior to conducting a campaign based on engineering-scale test results and anticipated full-scale operating scenarios. As the RD&D project progresses, the results of previously conducted campaigns will be used to select new values and to establish process envelopes and control parameters. A draft test matrix and objectives are included in Appendix A. The final test matrix will be developed jointly between Ecology, ORP, and CH2M HILL. This matrix will be developed to support supplemental waste treatment technology decisions required by the HFFACO (specifically, Milestones M-62-08 and M-62-11) and to support waste form qualification. At this time, the range of parameter values and their relationships have not been finalized.

Changes to process conditions during a campaign producing a specific treated waste will only be made to keep the process equipment running consistently. Adjustment of these parameters will be controlled in such a way that significant changes will not result in system upsets or result in conditions that cannot be reproduced in full-scale processing.

Accurate determination of the effect of a given parameter change is critical to the testing project in terms of system design, process optimization, and expansion of the potential system operating envelope. Therefore, only a single parameter will be changed at a time within a campaign unless the relationship between multiple parameters requires that more than one variable be changed (e.g., treating material with high moisture content may require adjustment not only to feed additives but also to the treatment rate).

5.2 TEST PLAN

Conducting a campaign requires documentation of activities and procedures to be performed, therefore, a test plan will be prepared for each campaign. Test plans will include the following:

- Objective(s) of campaign
- Timing, duration, and schedule of campaign
- Description of feed materials and additives
- Pre-test preparations
- Baseline process parameters
- Range of parameter adjustments
- Operating procedures
- Management of treated waste
- Type, quantity, and sequence of data acquisition
- Reporting requirements
- Health and safety/contingency planning.

Testing of the bulk vitrification technology will incorporate a series of process variables that can be varied over a predetermined range; with the goal of optimizing both treated waste quality and process operations. In addition to the various technology-specific parameters, the characteristics of the waste material and glass formers are also varied during the testing project. A range of physical, chemical, and radioactive properties may be expected in the actual waste feed material. The test plan will accommodate the expected range of these characteristics by including them as testing variables.

5.3 OPERATOR PREPARATION

All RD&D activities will be conducted in compliance with applicable site activity constraints, health and safety considerations, and site-wide policies. A complete understanding of the scope and procedures involved in a campaign will be provided to all operating personnel before treatment of materials is begun. CH2M HILL and the DBVS vendor have the responsibility for providing this understanding through a formal classroom and field training program. The test plan provides the basis for this preparation, which has two major components: equipment operation and site operating constraints. The process operations portion of the preparation will be both technology-specific and project goal-specific.

5.4 DATA ACQUISITION

Collection of accurate and relevant data during a campaign is necessary to determine that satisfactory material processing and treated waste generation has occurred. The subsequent correlation of this data will determine the suitability of a given set of operating conditions. Data acquisition frequency will vary, depending on the relationship between the parameter altered and the data type. The sampling type and frequency are presented in Section 6.0, Waste Analysis Plan.

Data acquisition requirements must assure that all personnel are aware of the level of observation and data acquisition accuracy expected during the campaign. Data acquired will be used for assessing system performance, treatment results, waste form performance, and LDR compliance.

5.5 CAMPAIGN DURATION

Actual duration may vary greatly based on the amount of material placed in the waste container and the vitrification process parameters. A detailed determination of the total number of campaigns to be conducted, and the duration of those sessions cannot be made at this time. The anticipated number of campaigns is approximately 50 conducted over 365 operating days, which may require more than one calendar year to complete (OSWER Guidance Manual).

5.6 SYSTEM OPTIMIZATION

Given the steady-state nature of the DBVS process and the batch size(s) of treated waste produced during a single campaign, it is not likely that significant process adjustments will need to be made during the course of a campaign. Instead, the system will be controlled to match the stated test parameter values for the campaign as closely as possible.

Therefore, process optimization for this technology for each campaign will be limited to step changes in material composition, process settings, and operational changes made once testing using the initial set of test parameters (Section 5.1.2) has been completed. Changes made between campaigns during the initial portion of Phase 2 will be based, where applicable, on the testing results from the preceding campaign(s), operating data, operator observations, a predetermined amount of change to one or more parameters, and/or other criteria described in the test plan.

Those test conditions and parameter values that indicate a trend toward optimization will be used as baseline conditions for additional campaigns with the goal of defining one or more acceptable operating scenarios during Phase 2. In this context, "acceptable" means a cost-effective reproducible set of operating conditions that results in treated waste that meets the waste acceptance criteria of the IDF or other permitted Hanford Site disposal facility.

In addition, data will be collected on the performance of the main offgas system for both phases to optimize the production system configuration and to minimize emissions of both gaseous pollutants and radionuclides.

5.7 NORMAL OPERATIONS

Normal operations include waste feed and process additive preparation, feed staging, startup, process operations, and system shutdown. These are the routine conditions for the processing equipment and address basic system performance and operational, quality assurance, safety, and data acquisition activities.

The sequence and conduct of these activities will be noted in the test plan prepared for each campaign and will serve as the baseline conditions for conducting testing under the RD&D project. The system manufacturers' operations and maintenance documentation will serve as the primary guidance for operating the system, while the individual test plan for a given campaign and the Waste Analysis Plan (Section 6.0) will serve as the guidance documents for production and analysis of treated waste products.

5.8 UPSET CONDITIONS

Upset conditions consist of deviations from normal conditions that can occur, even though operational impairment may not occur. An example of an upset condition is loss of vacuum in the mixer/dryer. Upset conditions can occur due to equipment malfunction, loss of process control, or inability of the processing system to maintain steady-state operating conditions. The control system will contain monitoring sensors, control logic, and alarm points consistent with the types and ranges of upset conditions that may occur. The duties of operating personnel include visual observation of process equipment and parameters in order to detect and, if feasible, correct trends in conditions that may precede annunciation of an upset condition by the control system.

Recovery from upset conditions will be initially attempted by adjustment of process conditions using either manual or automatic changes in control system settings. If this effort is not

successful, a normal shutdown of the process system will be conducted followed by performance of system adjustment and/or maintenance.

5.9 EMERGENCY CONDITIONS

Emergency conditions are postulated from safety analyses and are discussed in more detail in the Contingency Plan (Section 10.0 and Appendix C). Examples of emergency conditions would be loss of system electrical power, failure of a critical mechanical or powered component, or unstable process conditions. The intent of the safety analyses is to identify these low-probability accidents during conceptual and preliminary design. Plant conditions resulting from such conditions will preclude further operation until repairs or adjustments are made. System and structural designs will address design-based accidents. Recovery from any such incidents will require specific plans to return the plant to normal operational conditions. Appendix E contains operational parameters, measurement methods, limit values, and response actions.

5.10 EMISSION SAMPLING

CEMS calibration, testing, and operation will be conducted in compliance with EPA Regulation 40 CFR 60, Appendix B, applicable WAC test methods, and the *New Source Review Notification of Construction for the Supplemental Treatment Test and Demonstration Facility* (Schepens 2004). Stack testing will be conducted in compliance with EPA regulation 40 CFR 60, Appendix A, applicable sections of SW-846, and applicable WAC test methods.

5.11 REPORTING

At the completion of the campaign and subsequent data analysis, a summary report will be prepared addressing the conduct of the campaign, operational data acquired, and emissions and treated waste analysis results. It is anticipated that the testing results can be applicable to additional campaign(s) and/or the transition to full-scale operation of a bulk vitrification facility. Potentially applicable aspects of system design, operation, and data acquisition will be discussed in the report and presented along with recommendations for implementation. Test reports will be made available for Ecology review and use at the Test and Demonstration Facility.

At the completion of Phase 1, a report on test conduct, findings, and conclusions will be prepared. The various campaign reports will be incorporated into a comprehensive report for Phases 1 and 2 (Section 9.0) to be submitted at the completion of the RD&D project or on date(s) noted in the RD&D Permit.

5.12 EQUIPMENT OPERATING CONSIDERATIONS

Safe and consistent equipment operation is essential to achieving the RD&D project objectives. Accordingly, prior to final treatment equipment design and installation for the DBVS, conditions that may result in unscheduled equipment shutdowns, out-of-bounds process operation, or incomplete/ineffective waste treatment will be identified. Equipment and control system designs will ensure that safe shutdown and recovery can be conducted should upset or emergency conditions occur.

Figure 5-1. Test Parameter Relationships

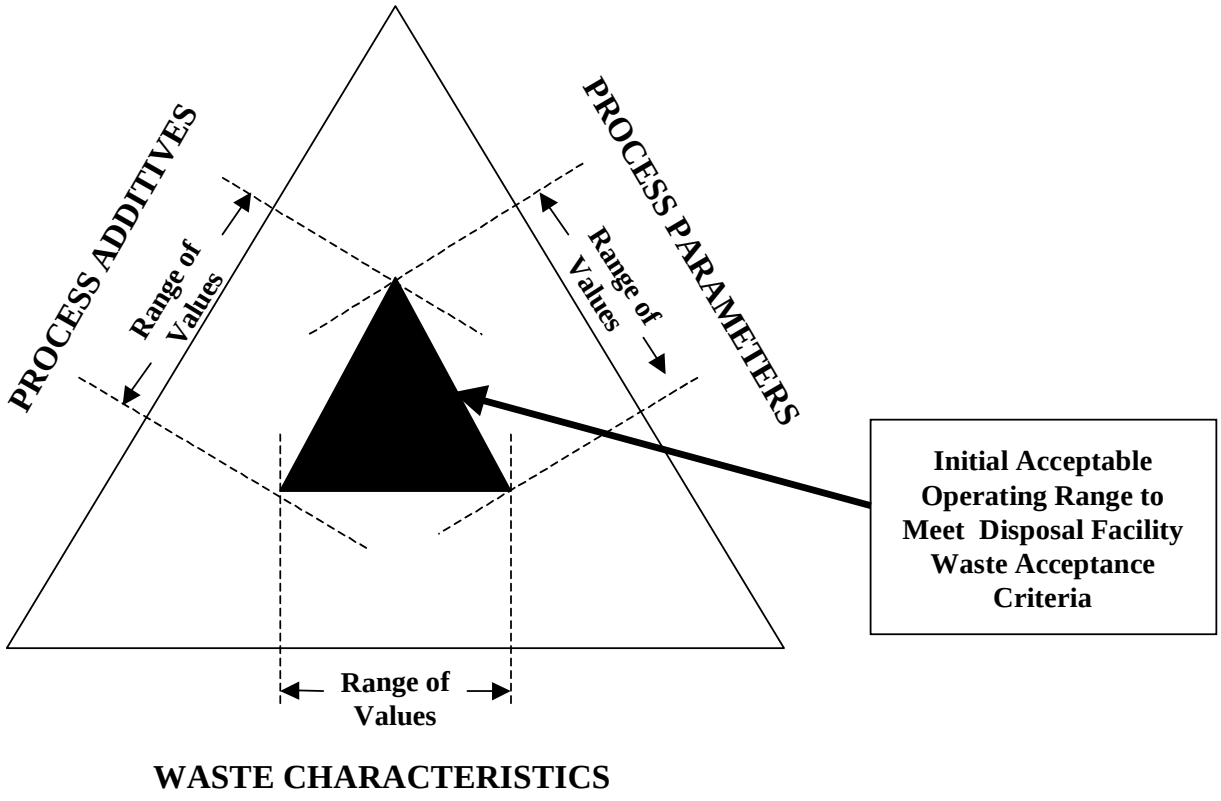

Appendix B
Process Flow Diagrams

This page intentionally left blank.

APPENDIX B

PROCESS FLOW DIAGRAMS

FIGURES

Figure B-1. Phase 1 Process Flow Diagram - Page 1 ..... B-1
Figure B-2. Phase 1 Process Flow Diagram - Page 2 ..... B-2
Figure B-3. Phase 1 Process Flow Diagram - Page 3 ..... B-3
Figure B-4. Phase 2 Process Flow Diagram - Page 1 ..... B-4
Figure B-5. Phase 2 Process Flow Diagram - Page 2 ..... B-4
Figure B-6. Phase 2 Process Flow Diagram - Page 3 ..... B-6
Figure B-7. Phase 1 WRS Flow Diagram B-7
Figure B-8. Phase 2 WRS Flow Diagram B-8

Figure B-1. Phase 1 Process Flow Diagram - Page 1

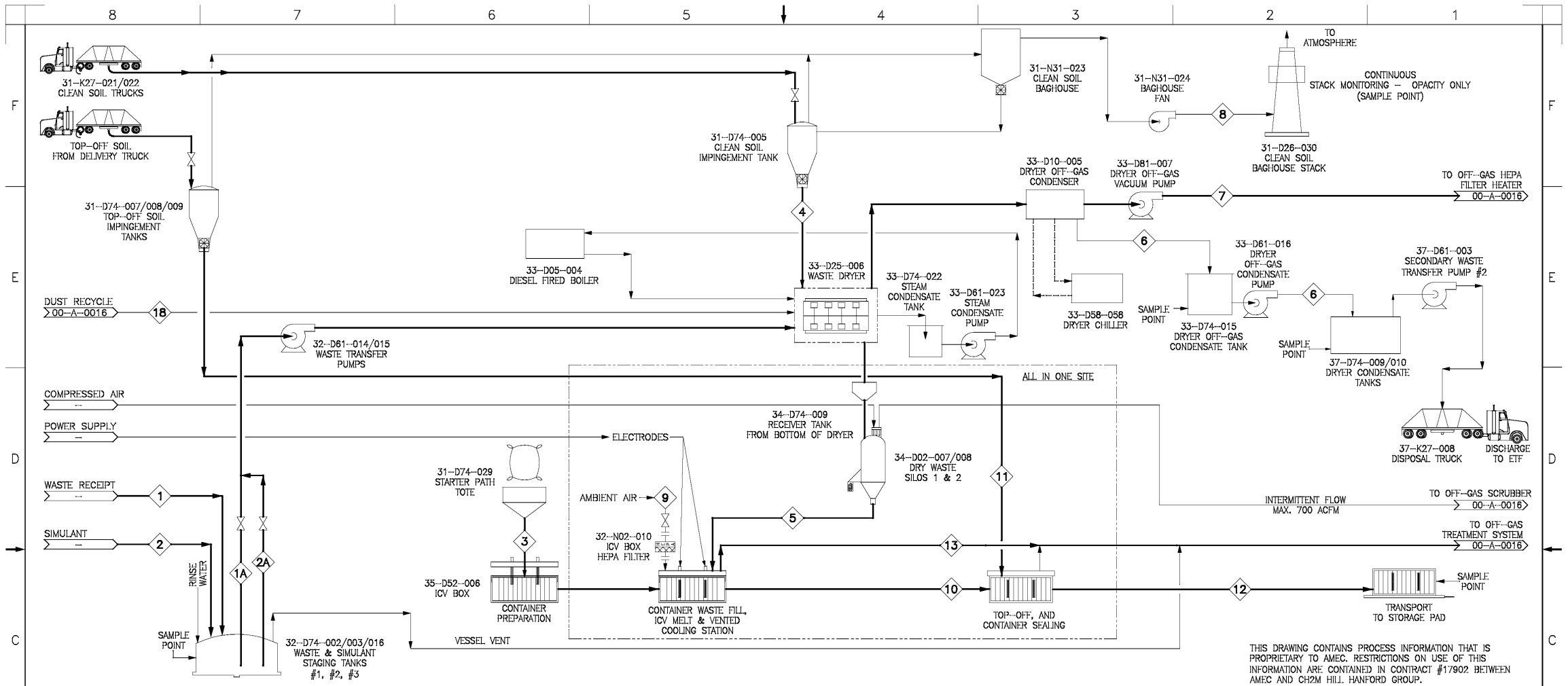

STREAM No.		1	2	1A	2A	3	4	5	6	7	8	9	10	11	12	13	18
STREAM NAME	UNITS	WASTE RECEIPT	SIMULANT	WASTE FLOW	SIMULANT FLOW	STARTER PATHS	SOIL	ICV FEED	DRYER CONDENSATE	DRYER AIR	OFF GAS AIR	ICV AIR	HOT ICV PRODUCT	TOP UP SOIL	COOLED ICV PRODUCT	ICV OFF GAS	DUST RECYCLE
PHASE		LIQUID	LIQUID	LIQUID	LIQUID	SOLID	SOLID	SOLID	LIQUID	GAS	GAS	GAS	SOLID	SOLID	SOLID	GAS	SOLID
CONTINUOUS MASS FLOWRATE	kg/hr	24.3	295.4	24.3	295.4	7.46	192.2	287.2	226.9	78.7	164.7	172.6	217.2	50	217.2	249.9	2.27
CONT. VOL. FLOW RATE (LIQ/GAS)	GPM/ACFM	0.08	1.01	0.08	1.01	0.89	21.85	0	1.07	47.8	100	86	0	0	0	303	
BATCH VOLUME	USG/ACF	125	1521	125	1521				1607	72003	150751	1037551	0	0	0	3652404	
BATCH MASS	Kg	610	7428	610	7428	1500	4731	7128	5670	1977	4139	34693	43655	10050	43655	50232	456
BATCH TRANSFER TIME	Hr	0.03	0.34	0.03	0.34	0.5	0.25	1	8	8	5	139	201	4	201	139	139
BATCH VOLUME FLOW	USGPM/ACFM	75	75	75	75				3.3	150.0	503	124	0	0	0	438	
BATCH MASS FLOW	kg/hr	219/2	219/2	219/2	219/2	3000	18924	7128	709	247	828	250	217.2	2513	217.2	361	3.28
DESIGN FACTOR	DIMENSIONLESS	1	1	1	1	1	1	1	1.1	1	1	1	1	1	1	1	1
DESIGN VOLUME FLOW	USGPM/ACFM	75	75	75	75				4	150	503	124	NA	NA	NA	438	
DESIGN MASS FLOW	kg/hr	21972	21972	21972	21972	3000	18924	7128	709	247	828	250	217.2	2513	217.2	361	3.28
SpG		1.29	1.29	1.29	1.29	2.24	2.34	2.08	0.93	0.001	0.001	0.001	2.65	2.6	2.76	0	2.54
SpG (BULK SOLIDS ONLY)						1.5	1.5	1.5					2.65	1.5	2.76		1.5
GAS PRESSURE	In. WG	n/a	n/a	n/a	n/a	n/a	n/a	n/a	n/a	--67	2	0	n/a	n/a	n/a	--1	n/a
TEMPERATURE	oC	28	28	28	28	25	25	28	60	58	25	25	1300	25	50	469	300
H2O LIQUID	kg/hr	16.2	197.2	16.2	197.2	0.37	19.2	5.7	226.9	0	0	0	0	0	0	0	0
H2O Gas	kg/hr									0	0	0				6.15	
FEED Na	kg/hr	2.2	26.3	2.2	26.3	0.07	3.7	32.5	0	0	0	0	32.2	0	32.2	0.3	0.3
SO2 GAS	ppmV									0	0	0				1134	
NOx GAS	ppmV									0	0	0				137799	
HCl GAS	ppmV									0	0	0				110	
137Cs	Ci/hr	1.16E--01	0.00E+00	1.16E--01	0.00E+00	0.00E+00	0.00E+00	1.16E--01	0.00E+00	0.00E+00	0.00E+00	0.00E+00	1.15E--01	0.00E+00	1.15E--01	1.17E--03	1.17E--03
99Tc	Ci/hr	8.89E--04	0.00E+00	8.89E--04	0.00E+00	0.00E+00	0.00E+00	9.34E--04	0.00E+00	0.00E+00	0.00E+00	0.00E+00	8.86E--04	0.00E+00	8.86E--04	4.69E--05	4.68E--05
TRU	Ci/hr	6.83E--05	0.00E+00	6.83E--05	0.00E+00	0.00E+00	0.00E+00	6.82E--05	0.00E+00	0.00E+00	0.00E+00	0.00E+00	6.81E--05	0.00E+00	6.81E--05	6.84E--09	6.84E--09
129I	Ci/hr	1.71E--06	0.00E+00	1.71E--06	0.00E+00	0.00E+00	0.00E+00	1.55E--06	1.55E--06	0.00E+00	0.00E+00	0.00E+00	1.55E--07	0.00E+00	1.55E--07	1.40E--06	1.40E--06

THIS DRAWING CONTAINS PROCESS INFORMATION THAT IS PROPRIETARY TO AMEC. RESTRICTIONS ON USE OF THIS INFORMATION ARE CONTAINED IN CONTRACT #17902 BETWEEN AMEC AND CH2M HILL HANFORD GROUP.

GENERAL NOTES:

1. DRAWINGS 0015, 0016 AND 0017 REPLACE 0011 AND 0012.
2. SINGLE TRAIN FACILITY THROUGHPUT: PROCESS FEED IS MODELLED BASED ON A DESIGN FEED OF 1.09 GPM (INCLUDING 1000 GAL OF WASTE). A TOTAL OPERATING EFFICIENCY OF 70% SHOULD BE APPLIED TO ACHIEVE A 0.76 GPM PRODUCTION RATE WITH A 20.0 WT% Na2O GLASS LOADING IN THE GLASS PRODUCT.
3. VALVES ARE ONLY SHOWN TO INDICATE PROCESS INTENT.
4. FEED DATA BASED ON SECTIONS 3.1.2.1.1.1 AND 3.1.2.1.1.2 IN RPP--17403 REV 0.
5. RADIONUCLIDE CONTENT WAS BASED ON TABLE 3--3 IN SECTION 3.1.2.1.1.3 OF RPP--17403 REV 0.
6. NO EQUIPMENT FOR SOIL ADDITIVES IS INCLUDED.

Rev.	REVISION DESCRIPTION	Date	By	Ch'd	Approved	Eng Mgr	Proj Mgr
A	FINAL ISSUE	28 APR 04	SB	LSG	KN	TH	

In making requests for transmittal of data by any electronic media, the Company receiving such data agrees that AMEC Americas Limited cannot be held responsible for users of the data outside of or beyond the scope of our original agreement. Also, because data stored in electronic media or transmitted by electronic means can deteriorate undetected or be modified without the consultant's knowledge, the Company receiving data agrees that AMEC Americas Limited cannot be held liable for the compatibility, completeness or correctness of the data.

NAME	DATE	COMPANY
DRAWN BY		
DESIGNED BY		
REVIEWED BY		
DISCIPLINE / AREA LEAD		
ENGINEERING MANAGER		
PROJECT MANAGER		
DESIGN AUTHORITY		

AMEC DRAWING NO: F--143643--00--A--0015 REV: A

U.S. DEPARTMENT OF ENERGY
Office of River Protection

amec

PARTIAL DBVS
FEED PREPARATION & MELT
PROCESS FLOW DIAGRAM

SIZE: F | SCALE: NTS

DRAWING TRACEABILITY LIST: DWG NO | TITLE | REFERENCES: REF NUMBER | TITLE | NEXT USED ON

REVISIONS: REV | DESCRIPTION | REV BY | REV DATE | CHECKED BY | TCN NO | COMPANY

Figure B-2. Phase 1 Process Flow Diagram - Page 2

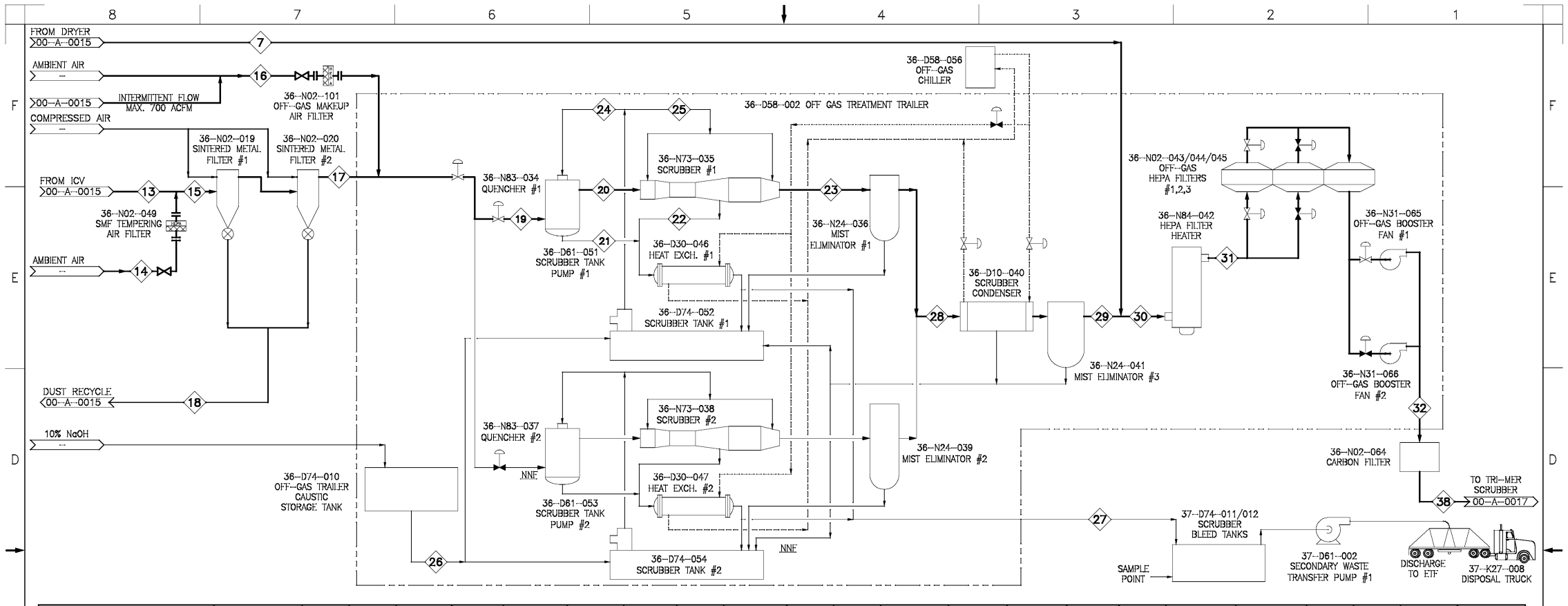

STREAM No.		7	13	14	15	16	17	18	19	20	21	22	23	24	25	26	27	28	29	30	31	32	38
STREAM NAME	UNITS	DRYER AIR	ICV OFF GAS	COOLING ICV AIR	SM FILTER INLET	SCRUBBER AIR DILUTION	FILTERED OFF GAS	DUST RECYCLE	QUENCH FEED	QUENCHER DISCHARGE	QUENCH RETURN	SCRUB RETURN	SCRUB DISCHARGE	QUENCH SOLUTION	SCRUB SOLUTION	CAUSTIC MAKE--UP	SCRUB RETURN BLEED	CONDENSER FEED	CONDENSER DISCHARGE	HEATER FEED	HEPA FEED	C--FILTER INLET	C--FILTER DISCHARGE
PHASE		GAS	GAS	GAS	GAS	GAS	GAS	SOLID	GAS	GAS	LIQUID	LIQUID	GAS	LIQUID	LIQUID	LIQUID	LIQUID	GAS	GAS	GAS	GAS	GAS	GAS
CONTINUOUS MASS FLOWRATE	kg/hr	78.7	250	173	422	3611.3	420.05	2.3	4031	4094	2423	4972	4093	2486	4971	559	497	4093	4093	4340	4340	4340	4340
CONT. VOL. FLOW RATE (LIQ/GAS)	GPM/ACFM	48	303	86	399	1800	399	0.004	2226	2064	19	9.2	2086	10	20	2.26	2	2086	2086	2231	2564	2564	2564
BATCH VOLUME	USG/ACF	72003	3652404	1037551	4816587	21708004	4816587	47	26847136	24890858	229411	111519	25156546	120547	241094	27243	24109	25156546	25156546	26903141	30922524	30922524	30922524
BATCH MASS	Kg	1977	50232	34693	84884	725871	84430	456	810301	822830	487073	999340	822693	499602	999203	112321	99921	822693	822693	872356	872356	872356	872356
BATCH TRANSFER TIME	Hr	8	139	139	139	139	139	139	139	139	139	139	139	139	139	139	139	139	139	139	139	139	139
BATCH VOLUME FLOW	USGPM/ACFM	150	438	124	578	2603	578	0.01	3219	2985	27.5	13.4	3016	14.5	28.9	3.3	2.9	3016	3016	3226	3708	3708	3708
BATCH MASS FLOW	kg/hr	247	361	250	611	5222	607	3.3	5830	5920	3504	7189	5919	3594	7189	808	719	5919	5919	6276	6276	6276	6276
DESIGN FACTOR	DIMENSIONLESS	1	1	1	1	1	1	1	1	1	1	1	1	1	1	1	1	1	1	1	1	1	1
DESIGN VOLUME FLOW	USGPM/ACFM	150	438	124	578	2603	578	0.01	3219	2985	27.5	13.4	3016	14.45	28.9	3.3	2.9	3016	3016	3226	3708	3708	3708
DESIGN MASS FLOW	kg/hr	247	361	250	611	5222	607	3.3	5830	5920	3504	7189	5919	3594	7189	808	719	5919	5919	6276	6276	6276	6276
SpG		0.001	0.0005	0.001	0.001	0.001	0.001	2.54	0.001	0.001	1.1	1.1	0.001	1.1	1.1	1.1	1.1	0.001	0.001	0.001	0.001	0.001	0.00
SpG (BULK SOLIDS ONLY)								1.5															
GAS PRESSURE	in. WG	--67	--1	0	--1	0	--9	n/a	--9	--10	n/a	n/a	--60	n/a	n/a	n/a	n/a	--62	--67	--67	--69	--70	--4
TEMPERATURE	oC	58	469	25	300	25	300	300	58	25	24	26	27	25	25	25	25	27	27	28	75	75	75
H2O LIQUID	kg/hr	0	0	0	0	0	0	0	0	1.2	1984	4114	1.2	2065	4129	503	409.9	1.2	1.2	0	0	0	0
H2O Gas	kg/hr	0	6.1	0	6.2	0	6.2	0	4.8	84.7	0	0	109.3	0	0	0	0	109	109	112	112	0	112
FEED Na	kg/hr	0	0.3	0	0.3	0	0	0.3	0	0	0	0	0	0	0	0	0	0	0	0	0	0	0
SO2 GAS	ppmV	0	1134	0	666	0	667	0	69	20	0	0	2	0	0	0	0	2	2	2	2	2	2
NOx GAS	ppmV	0	137299	0	80592	0	80791	0	8352	7314	0	0	5838	0	0	0	0	5838	5838	5838	5510	5510	5510
HCl GAS	ppmV	0	110	0	64	0	65	0	7	2.0	0	0	0.2	0	0	0	0	0.2	0.2	0.2	0.2	0.2	0.2
137Cs	Ci/hr	0	1.2E--03	0.0E+00	1.2E--03	0.0E+00	3.5E--07	1.2E--03	3.5E--07	3.5E--08	1.9E--06	3.2E--06	3.5E--09	1.6E--06	3.2E--06	0.0E+00	3.5E--07	3.5E--09	3.5E--09	3.6E--09	3.6E--09	3.7E--11	3.7E--11
99Tc	Ci/hr	0	4.7E--05	0.0E+00	4.7E--05	0.0E+00	1.4E--08	4.7E--05	1.4E--08	1.4E--09	7.7E--08	1.3E--07	1.4E--10	6.4E--08	1.3E--07	0.0E+00	1.4E--08	1.4E--10	1.4E--10	1.5E--10	1.5E--10	1.5E--12	1.5E--12
TRU	Ci/hr	0	6.8E--09	0.0E+00	6.8E--09	0.0E+00	2.1E--12	6.8E--09	2.0E--12	2.0E--13	1.1E--11	1.9E--11	2.0E--14	9.4E--12	1.9E--11	0.0E+00	2.0E--12	2.0E--14	2.0E--14	2.1E--14	2.1E--14	2.1E--16	2.1E--16
129I	Ci/hr	0	1.4E--06	0.0E+00	1.4E--06	0.0E+00	4.2E--10	1.4E--06	4.2E--10	4.2E--11	2.3E--09	3.9E--09	4.2E--12	1.9E--09	3.8E--09	0.0E+00	4.1E--10	4.2E--12	4.2E--12	4.4E--12	4.4E--12	4.4E--12	4.4E--14

GENERAL NOTES

1. DRAWINGS 0015, 0016 AND 0017 REPLACE 0011 AND 0012.
2. VALVES ARE SHOWN TO INDICATE PROCESS INTENT.
3. NNF -- NORMALLY NO FLOW

THIS DRAWING CONTAINS PROCESS INFORMATION THAT IS PROPRIETARY TO AMEC. RESTRICTIONS ON USE OF THIS INFORMATION ARE CONTAINED IN CONTRACT #17902 BETWEEN AMEC AND CH2M HILL HANFORD GROUP.

DRAWING TRACEABILITY LIST

DWG NO	TITLE	REF NUMBER	TITLE
--		--	

REFERENCES

NEXT USED ON

REVISIONS

REV	DESCRIPTION	DATE	CHECKED BY	ISSUED
--				

In making requests for transmittal of data by any electronic media, the Company receiving such data agrees that AMEC Americas Limited cannot be held responsible for users of the data outside of or beyond the scope of our original agreement. Also, because data stored in electronic media or transmitted by electronic means can deteriorate undetected or be modified without the consultant's knowledge, the Company receiving data agrees that AMEC Americas Limited cannot be held liable for the compatibility, completeness or correctness of the data.

Rev.	REVISION DESCRIPTION	Date	By	Chk'd	Appd	Appd by
A	FINAL ISSUE	28 APR 04	SB	LSG	KN	TH

AMEC SERVICE NO. F--143643--00--A--0016 REV A

U.S. DEPARTMENT OF ENERGY
Office of River Protection

amec

PARTIAL DBVS
TRAILER OFF--GAS TREATMENT
PROCESS FLOW DIAGRAM

SCALE NTS

Figure B-3. Phase 1 Process Flow Diagram - Page 3

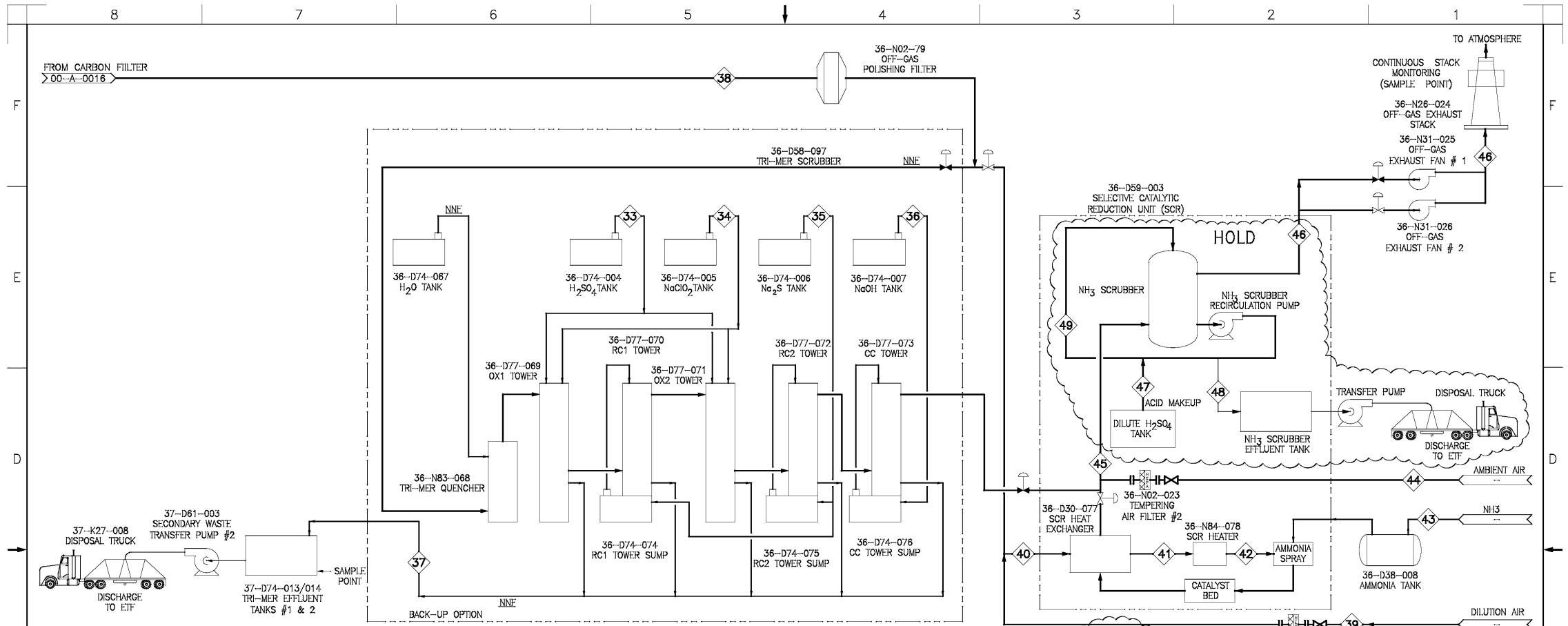

ALTERNATE -- NORMALLY NO FLOW

STREAM No.		33	34	35	36	37	38	39	40	41	42	43	44	45	46	47	48	49
STREAM NAME	UNITS	DILUTE SULFURIC ACID	DILUTE NaClO2	DILUTE Na2S	DILUTE NaOH	RETURN SOLUTION	C--FILTER DISCHARGE	DILUTION AIR	SCR FEED	PART HEATED SCR FEED	HEATED SCR FEED	AMMONIA FEED	SCR AMBIENT AIR	STACK DISCHARGE	SCRUBBED OFF--GAS	DILUTE ACID MAKE--UP	NH3 SCRUB BLEED	NH3 SCRUB SOLUTION
PHASE		LIQUID	LIQUID	LIQUID	LIQUID	LIQUID	GAS	GAS	GAS	GAS	GAS	GAS	GAS	GAS	GAS	GAS	GAS	GAS
CONTINUOUS MASS FLOWRATE	kg/hr						4340	3671	7844	7844	7844	10.0	0	7854	8389	566	34	59717
CONT. VOL. FLOW RATE (LIQ/GAS)	GPM/ACFM						2564	1830	4219	5200	7571	8	0	6561	4655	2.5	0.15	263
BATCH VOLUME	USG/ACF						30922524	22069802	50877048	62711460	91301428	101931	0	79125377	56143948	30163	1811	3171923
BATCH MASS	Kg						872356	737969	1576558	1576558	1576558	2014	0	1578572	1686111	113824	6846	12003125
BATCH TRANSFER TIME	Hr	70	70	70	70	70	139	139	139	139	139	139	139	139	139	139	139	139
BATCH VOLUME FLOW	USGPM/ACFM						3708	2648	6100	7519	10947	12	0	9487	6732	3.6	0	380
BATCH MASS FLOW	kg/hr						6276	5309	11342	11342	11342	14.5	0	11357	12130	819	49	86353
DESIGN FACTOR	DIMENSIONLESS						1	1	1	1	1	1.1	1	1	1	1	1	1
DESIGN VOLUME	USGPM/ACFM						3708	2846	6100	7519	10947	13	0	9487	6732	3.6	0.22	380
DESIGN MASS	kg/hr						6276	5309	11342	11342	11342	16	0	11357	12130	819	49	86353
SpG		1.04	0.99	1.09	1.10	1.00	0.00	0.00	0.00	0.00	0.00	0.00	0.00	0.00	0.00	1.00	1.00	1.00
SpG (BULK SOLIDS ONLY)																		
GAS PRESSURE	in. WG	n/a	n/a	n/a	n/a	n/a	--4	0	--4	--10	--12	n/a	0	--24	2	n/a	n/a	n/a
TEMPERATURE	oC	25	25	25	25	25	75	25	53	120	300	25	25	222	49	25	49	49
H2O LIQUID	kg/hr						0	0	0	0	0	0	0	0	0	563.5	33.3	58350
H2O Gas	kg/hr						112	0	145	145	145	0	0	160.2	648.4	0	0	0
FEED Na	kg/hr						0	0	0	0	0	0	0	0	0	0	0	0
SO2 GAS	ppmV						2	0	1.1	1.1	1.1	0	0	1.1	0.95	0	0	0
NOx GAS	ppmV						5510	0	3063	3063	3063	0	0	82.2	74.3	0	0	0
HCl GAS	ppmV						0.2	0	0.1	0.1	0.1	0	0	0.1	0.09	0	0	0
137Cs	Ci/hr	0.0E+00	0.0E+00	0.0E+00	0.0E+00	0.0E+00	3.7E--11	0.0E+00	3.5E--11	3.5E--11	3.5E--11	0.0E+00	0.0E+00	3.5E--11	3.5E--11	0.0E+00	0.0E+00	0.0E+00
99Tc	Ci/hr	0.0E+00	0.0E+00	0.0E+00	0.0E+00	0.0E+00	1.5E--12	0.0E+00	1.4E--12	1.4E--12	1.4E--12	0.0E+00	0.0E+00	1.4E--12	1.4E--12	0.0E+00	0.0E+00	0.0E+00
TRU	Ci/hr	0.0E+00	0.0E+00	0.0E+00	0.0E+00	0.0E+00	2.1E--16	0.0E+00	2.0E--16	2.0E--16	2.0E--16	0.0E+00	0.0E+00	2.0E--16	2.0E--16	0.0E+00	0.0E+00	0.0E+00
129I	Ci/hr	0.0E+00	0.0E+00	0.0E+00	0.0E+00	0.0E+00	4.4E--14	0.0E+00	4.2E--14	4.2E--14	4.2E--14	0.0E+00	0.0E+00	4.2E--14	4.2E--14	0.0E+00	0.0E+00	0.0E+00

NOTES:

1. DRAWINGS 0015, 0016 AND 0017 REPLACE 0011 AND 0012.
2. NOx EMISSION AT STREAM 46 WILL BE LESS THAN 1.5lbs/hr.
3. VALVES ARE SHOWN TO INDICATE PROCESS INTENT
4. NNF -- NORMALLY NO FLOW

THIS DRAWING CONTAINS PROCESS INFORMATION THAT IS PROPRIETARY TO AMEC. RESTRICTIONS ON USE OF THIS INFORMATION ARE CONTAINED IN CONTRACT #17902 BETWEEN AMEC AND CH2M HILL HANFORD GROUP.

Rev.	REVISION DESCRIPTION	Date	By	Chk'd	Appr'd	Appr'd
A	FINAL ISSUE	28 APR 04	SB	LSG	KN	TH

DRAWING TRACEABILITY LIST

DWG NO	TITLE	REF NUMBER	TITLE
--		--	

REFERENCES

NEXT USED ON

REVISIONS

In making requests for information of data by any electronic media, the Company receiving such data agrees that AMEC Americas Limited cannot be held responsible for users of the data outside of or beyond the scope of our original agreement. Also, because data stored in electronic media or transmitted by electronic means can deteriorate undetected or be modified without the consultant's knowledge, the Company receiving data agrees that AMEC Americas Limited cannot be held liable for the compatibility, completeness or correctness of the data.

AMEC DWG/DB NO: F-143643-00-A-0017 REV: A

U.S. DEPARTMENT OF ENERGY
Office of River Protection

amec

PARTIAL DBVS
TRI-MER AND SCR
PROCESS FLOW DIAGRAM

SIZE: F SCALE: NTS

Figure B-4. Phase 2 Process Flow Diagram - Page 1

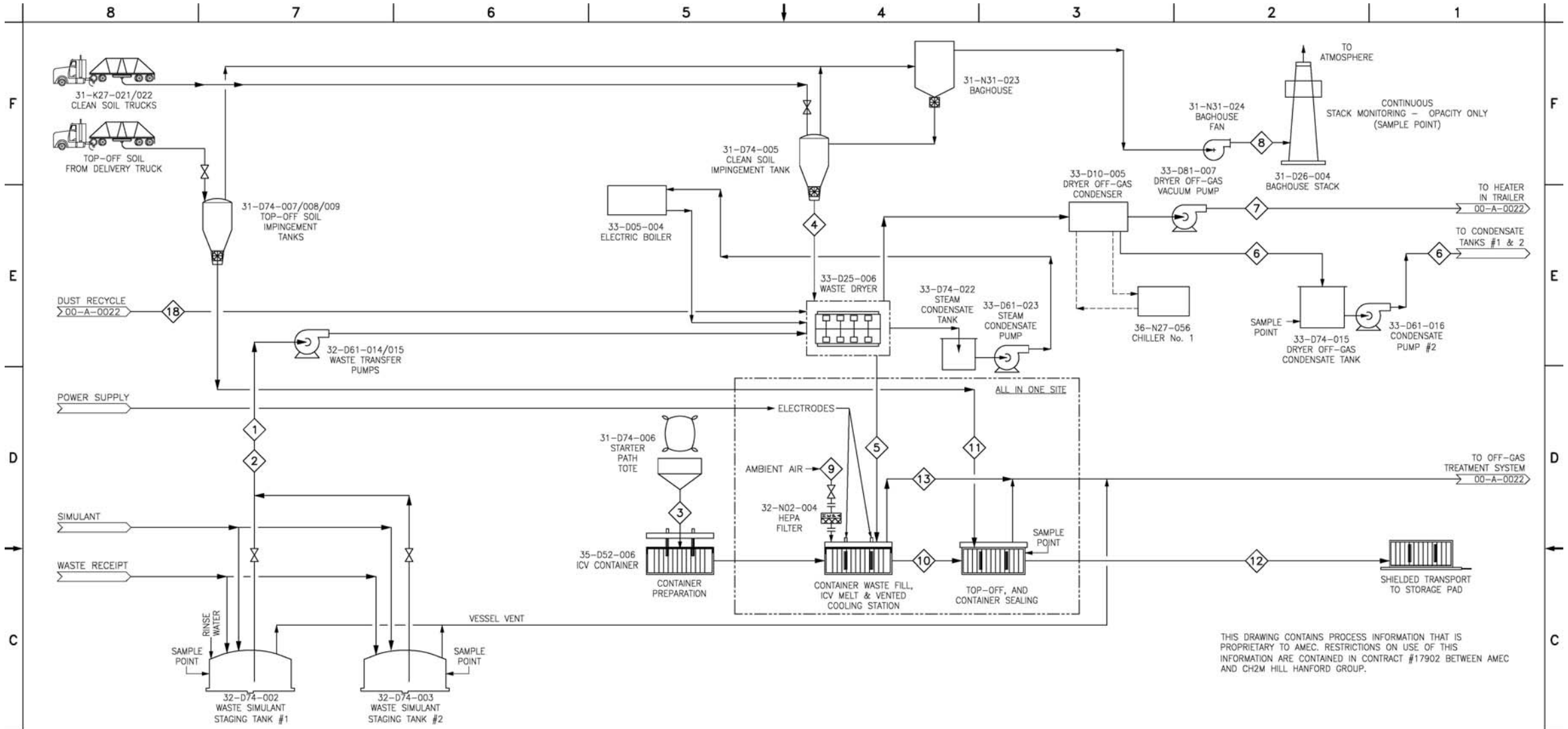

THIS DRAWING CONTAINS PROCESS INFORMATION THAT IS PROPRIETARY TO AMEC. RESTRICTIONS ON USE OF THIS INFORMATION ARE CONTAINED IN CONTRACT #17902 BETWEEN AMEC AND CH2M HILL HANFORD GROUP.

STREAM No.		1	2	3	4	5	6	7	8	9	10	11	12	13	18
STREAM NAME	UNITS	WASTE RECEIPT	SPIKING FLOW	STARTER PATHS	SOIL	ICV FEED	DRYER CONDENSATE	DRYER AIR	OFF GAS AIR	ICV AIR	HOT ICV PRODUCT	TOP UP SOIL	COOLED ICV PRODUCT	ICV OFF GAS	DUST RECYCLE
FLOW TYPE,(Batch or Continuous,Transfer units)		B(GPM)	B(GPM)	B (kg/min)	B (m3/min)	B (kg/hr)	Cont.	Cont.	Cont.	Cont.	Batch (Container/ Week)	Batch(kg/hr)	Batch (Container/ Week)	Cont.	Cont.
PHASE		LIQUID	LIQUID	SOLID	SOLID	SOLID	LIQUID	GAS	GAS	GAS	SOLID	SOLID	SOLID	GAS	SOLID
DESIGN MASS FLOWRATE	kg/hr	319.7	0.0	16.5	188	284	226.6	247	824	181	218	110	218	264	2
CONTINUOUS VOLUMETRIC FLOW RATE (LIQ/GAS)	GPM/ACFM	1.09	0.00	0	0	0	1.07	150	500	90	0.00	0.00	0.00	316.7	0.00
BATCH TRANSFER RATE	as shown	75	75	100	1	7275					0.84	Variable	0.84		
CYCLE TIME	hr	Variable	Variable	Variable	7.9	7.9					201	1	201		
SpG		1.29	0.997	2.24	2.34	2.07	0.93	0.001	0.001	0.001	2.64	2.6	2.76	0.0005	2.5
GAS PRESSURE	in. WG	n/a	n/a	n/a	n/a	n/a	n/a	-67	2	0	n/a	n/a	n/a	-1	n/a
TEMPERATURE	°C	28	25	25	25	27.99	90	90	90	25	1300	25	50	469	300
H2O Liquid	kg/hr	213.4	0.0	0.8	18.8	5.7	226.6	0	0	0	0	0	0	0	0.0
H2O Gas	kg/hr	0	0	0	0	0	0	0	0	0	0	0	0	6.5	0.0
Na	kg/hr	28.5	0.00	0.16	3.70	32.50	0	0	0	0	32.3	0	32.3	0.3	0.3
SO2 GAS	ppm	0	0	0	0	0	0	0	0	0	0	0	0	1085	0.00
NOx GAS	ppm	0	0	0	0	0	0	0	0	0	0	0	0	131400	0.00
HCl GAS	ppm	0	0	0	0	0	0	0	0	0	0	0	0	105	0.00
137Cs	Ci/hr	1.5E+00	0	0	0	1.5E+00	0	0	0	0	1.5E+00	0	1.5E+00	1.5E-02	1.5E-02
99Tc	Ci/hr	1.2E-02	0	0	0	1.2E-02	0	0	0	0	1.2E-02	0	1.2E-02	6.2E-04	6.2E-04
TRU	Ci/hr	9.0E-04	0	0	0	9.0E-04	0	0	0	0	9.0E-04	0	9.0E-04	9.0E-08	9.0E-08
129I	Ci/hr	2.3E-05	0	0	0	2.0E-05	2.0E-05	0	0	0	2.0E-06	0	2.0E-06	1.8E-05	1.8E-05

GENERAL NOTES:

1. SINGLE TRAIN FACILITY THROUGHPUT: PROCESS FEED IS MODELLED BASED ON A DESIGN FEED OF 1.09 GPM. A TOTAL OPERATING EFFICIENCY OF 70% SHOULD BE APPLIED TO ACHIEVE A 0.76 GPM PRODUCTION RATE WITH A 20.0 WT% Na2O GLASS LOADING IN THE GLASS PRODUCT.
2. VALVES ARE ONLY SHOWN TO INDICATE PROCESS INTENT.
3. FEED DATA BASED ON SECTIONS 3.1.2.1.1.1 AND 3.1.2.1.1.2 IN RPP-17403 REV 0.
4. RADIONUCLIDE CONTENT WAS BASED ON TABLE 3-3 IN SECTION 3.1.2.1.1.3 OF RPP-17403 REV 0.
5. NO EQUIPMENT FOR SOIL ADDITIVES IS INCLUDED.

Rev.	REVISION DESCRIPTION	Date	By	Ch'k'd	Approved Design Lead	Proj. Mgr.
A	ISSUED FOR CLIENT COMMENT	10 MAR 04	SLC		KN	TH

AMEC DRAWING NO F-143643-00-A-0021 REV A

U.S. DEPARTMENT OF ENERGY
Office of River Protection

amec

FULL DBVS
FEED PREPARATION & MELT
PROCESS FLOW DIAGRAM

SIZE F | BLDG NO | MODEL NO | DWG NO | REV
SCALE NTS | SHEET | OF

DRAWING TRACEABILITY LIST: DWG NO | TITLE
REFERENCES: REF NUMBER | TITLE
NEXT USED ON

REVISIONS: REV NO | DESCRIPTION | REV DATE | REV BY | CHECKED BY | CHECK COMPANY

In making requests for transmittal of data by any electronic media, the Company receiving such data agrees that AMEC Americas Limited cannot be held responsible for users of the data outside of or beyond the scope of our original agreement. Also, because data stored in electronic media or transmitted by electronic means can deteriorate undetected or be modified without the consultant's knowledge, the Company receiving data agrees that AMEC Americas Limited cannot be held liable for the compatibility, completeness or correctness of the data.

Figure B-5. Phase 2 Process Flow Diagram - Page 2

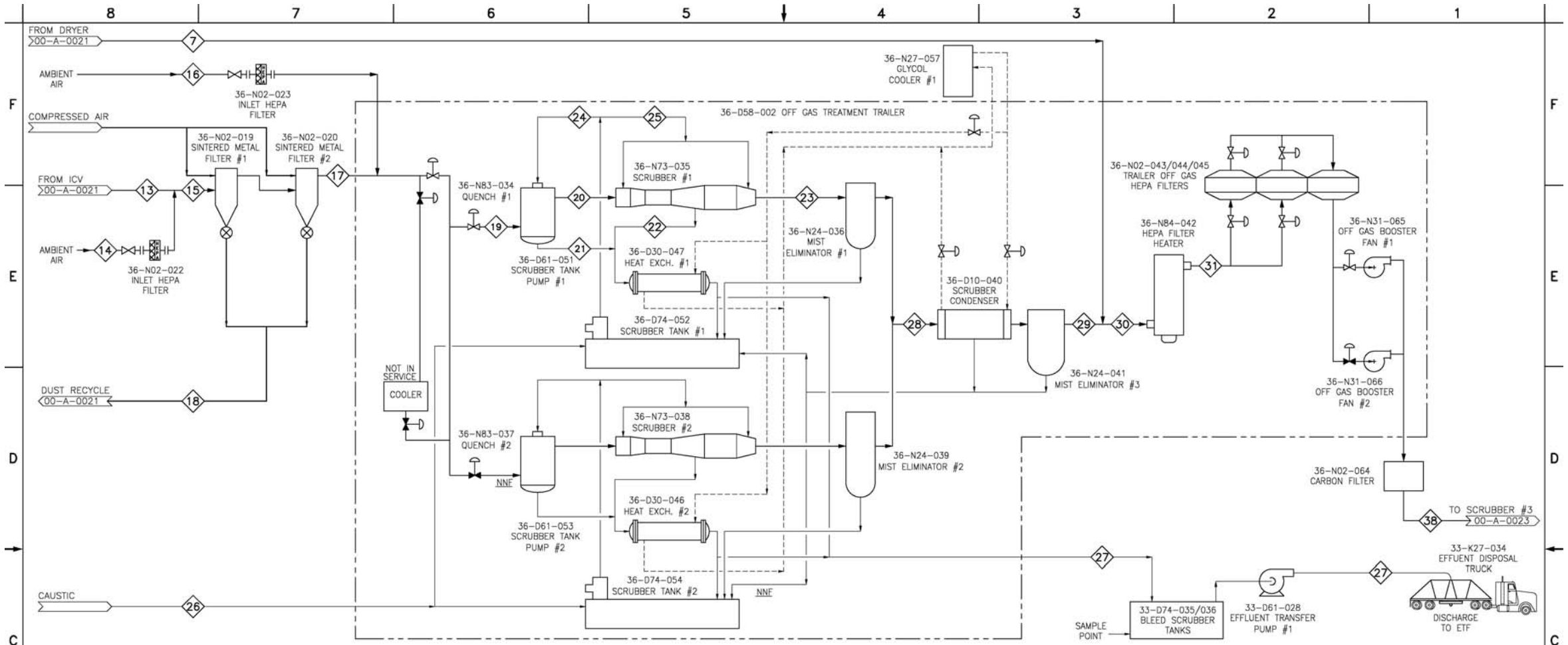

STREAM No.		7	13	14	15	16	17	18	19	20	21	22	23	24	25	26	27	28	29	30	31	38
STREAM NAME	UNITS	DRYER AIR	ICV OFF GAS	COOLING ICV AIR	ICV OFF GAS	SCRUBBER AIR DILUTION	FILTERED OFF GAS	DUST RECYCLE	QUENCH FEED	QUENCH DISCHARGE	QUENCH RETURN	SCRUB RETURN	SCRUB DISCHARGE	QUENCH SOLUTION	SCRUB SOLUTION	CAUSTIC MAKE-UP	SCRUB RETURN BLEED	CONDENSER FEED	CONDENSER DISCHARGE	HEATER FEED	HEPA FEED	C-FILTER DISCHARGE
FLOW TYPE,(Batch or Continuous,Transfer units)		Cont.	Cont.	Cont.	Cont.	Cont.	Cont.	Cont.	Cont.	Cont.	Cont.	Cont.	Cont.	Cont.	Cont.	Cont.	Cont.	Cont.	Cont.	Cont.	Cont.	Cont.
PHASE		GAS	GAS	GAS	GAS	GAS	GAS	SOLID	GAS	GAS	LIQUID	LIQUID	GAS	LIQUID	LIQUID	LIQUID	LIQUID	GAS	GAS	GAS	GAS	GAS
DESIGN MASS FLOWRATE	kg/hr	247	264	181	445	4815	442	2	5258	5341	2430	5012	5356	2513	5027	601	503	5356	5356	5603	5603	5603
CONTINUOUS VOLUMETRIC FLOW RATE (LIQ/GAS)	GPM/ACFM	150	317	90	419	2400	419	0	2804	2700	19	9	2755	10	20	2.43	2.00	2755	2755	2898	3318	3318
BATCH TRANSFER RATE	as shown																					
CYCLE TIME	hr																					
SpG		0.001	0.0005	0.0012	0.001	0.001	0.001	2.54	1.10	1.10	1.10	1.10	1.10	1.11	1.11	1.09	1.11	0.001	0.001	0.001	0.0010	0
GAS PRESSURE	in. WG	−67	−1.0	0.0	−1.0	0.0	−9.0	n/a	−9.0	−10.0	n/a	n/a	−60.0	n/a	n/a	n/a	n/a	−62.0	−67.0	−67.0	−70.0	−4
TEMPERATURE	°C	90	469	25	300	25	300	300	52	24	23	26	27	26	26	40	25	27	27	30	75	75
H2O Liquid	kg/hr	0	0	0	0	0	0	0	0	1.6	1989	4147	1.61	2088	4175	541	415	1.61	1.61	0	0	0
H2O Gas	kg/hr	0	6.5	0.0	6.5	0.0	6.5	0.0	6.3	110.6	0.0	0.0	143.0	0.0	0.0	0.0	0.0	143.0	143.0	144.5	144.5	145
Na	kg/hr	0	0.3	0.0	0.3	0.0	0.0	0.3	0.0	0.0	0.0	0.0	0.0	0.0	0.0	0.0	0.0	0.0	0.0	0.0	0.0	0
SO2 GAS	ppm	0	1085	0	636	0	637	0	53	15	0	0	2	0	0	0	0	2	2	1	1	1
NOx GAS	ppm	0	131400	0	76948	0	77130	0	6406	5602	0	0	4451	0	0	0	0	4451	4451	4258	4258	4257
HCl GAS	ppm	0	105.15	0	61.58	0	61.72	0	5.13	1.49	0	0	0.15	0	0	0	0	0.15	0.15	0.14	0.14	0
137Cs	Ci/hr	0	1.5E−02	0.0E+00	1.5E−02	0.0E+00	4.6E−06	1.5E−02	4.6E−06	4.6E−07	2.5E−05	4.2E−05	4.6E−08	2.1E−05	4.2E−05	0.0E+00	4.6E−06	4.6E−08	4.6E−08	4.6E−08	4.6E−08	4.6E−10
99Tc	Ci/hr	0	6.2E−04	0.0E+00	6.2E−04	0.0E+00	1.8E−07	6.2E−04	1.8E−07	1.8E−08	1.0E−06	1.7E−06	1.9E−09	8.4E−07	1.7E−06	0.0E+00	1.8E−07	1.9E−09	1.9E−09	1.9E−09	1.9E−09	1.8E−11
TRU	Ci/hr	0	9.0E−08	0.0E+00	9.0E−08	0.0E+00	2.7E−11	9.0E−08	2.9E−11	2.7E−12	1.5E−10	2.5E−10	2.7E−13	1.2E−10	2.46E−10	0.0E+00	2.7E−11	2.7E−13	2.7E−13	2.7E−13	2.7E−13	2.7E−15
129I	Ci/hr	0	1.8E−05	0.0E+00	1.8E−05	0.0E+00	5.5E−09	1.8E−05	5.5E−09	5.5E−10	3.0E−08	5.1E−08	5.5E−11	2.5E−08	5.0E−08	0.0E+00	5.5E−09	5.5E−11	5.5E−11	5.5E−11	5.5E−11	5.5E−13

THIS DRAWING CONTAINS PROCESS INFORMATION THAT IS PROPRIETARY TO AMEC. RESTRICTIONS ON USE OF THIS INFORMATION ARE CONTAINED IN CONTRACT #17902 BETWEEN AMEC AND CH2M HILL HANFORD GROUP.

GENERAL NOTES

1. VALVES ARE SHOWN TO INDICATE PROCESS INTENT.
2. NNF – NORMALLY NO FLOW

DRAWING TRACEABILITY LIST: DWG NO | TITLE
REFERENCES: REF NUMBER | TITLE
NEXT USED ON

REVISIONS: REV NO | DESCRIPTION | REV BY DATE | REV BY | CHECKED BY | ENGR | COMPANY

In making requests for transmittal of data by any electronic media, the Company receiving such data agrees that AMEC Americas Limited cannot be held responsible for users of the data outside of or beyond the scope of our original agreement. Also, because data stored in electronic media or transmitted by electronic means can deteriorate undetected or be modified without the consultant's knowledge, the Company receiving data agrees that AMEC Americas Limited cannot be held liable for the compatibility, completeness or correctness of the data.

Rev.	REVISION DESCRIPTION	Date	By	Ch'k'd	Approved Design Lead	Approved Proj. Mgr.
A	ISSUED FOR CLIENT COMMENT	10 MAR 04	SLC		KN	TH

AMEC DRAWING NO: F-143643-00-A-0022 REV: A

U.S. DEPARTMENT OF ENERGY
Office of River Protection

amec

FULL DBVS
TRAILER OFF GAS TREATMENT
PROCESS FLOW DIAGRAM

SIZE F | BLDG NO | PROJ. NO | DWG NO | REV
SCALE NTS | SHEET | OF

Figure B-6. Phase 2 Process Flow Diagram - Page 3

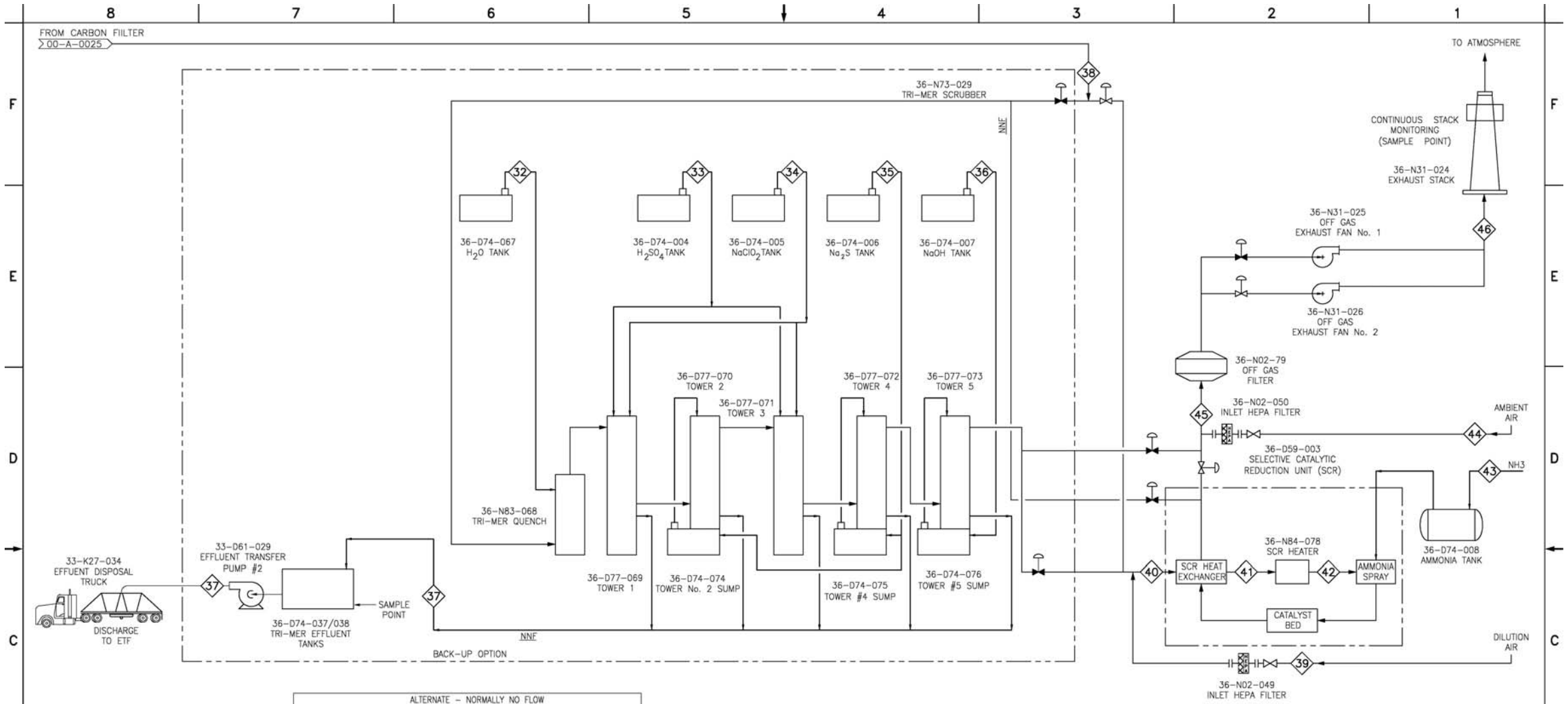

		ALTERNATE – NORMALLY NO FLOW														
STREAM No.		32	33	34	35	36	37	38	39	40	41	42	43	44	45	46
STREAM NAME	UNITS	TRI-MER QUENCH	DILUTE SULFURIC ACID	DILUTE NaClO2	DILUTE Na2S	DILUTE NaOH	RETURN SOLUTION	C-FILTER DISCHARGE	DILUTION AIR	SCR FEED	PART HEATED SCR FEED	HEATED SCR FEED	AMMONIA FEED	SCR AMBIENT AIR	STACK DISCHARGE	STACK DISCHARGE
FLOW TYPE,(Batch or Continuous,Transfer units)		Cont.	Cont.	Cont.	Cont.	Cont.	Cont.	Cont.	Cont.	Cont.	Cont.	Cont.	Cont.	Cont.	Cont.	Cont.
PHASE		LIQUID	LIQUID	LIQUID	LIQUID	LIQUID	LIQUID	GAS	GAS	GAS	GAS	GAS	GAS	GAS	GAS	GAS
DESIGN MASS FLOWS	kg	0	54,818	98,673	31,520	21,562	208,126	1,126,123	443,589	1,569,712	1,569,712	1,569,712	1,871	0	1,571,830	1,571,830
CONTINUOUS VOLUMETRIC FLOWS (LIQ/GAS)	USG/CF	0	13,705	25,216	7,675	4,934	51,529	40,012,540	13,265,987	53,273,274	62,676,820	91,256,780	94,762	0	81,199,485	81,199,485
BATCH TRANSFER RATE	as shown															
CYCLE TIME	hr															
SpG		0.997	1.04	1.07	1.09	1.1	1.07	0.001	0.001	0.001	0.001	0.001	0.001	0.001	0.001	0.001
GAS PRESSURE	in. WG	n/a	n/a	n/a	n/a	n/a	n/a	-4	0	-4	-10	-12	n/a	0	-24	2
TEMPERATURE	°C	25	25	25	25	25	25	75	25	62	120	300	25	25	236	236
H20 Liquid	kg	0	0	0	0	0	0	0	0	0	0	0	0	0	0	0
H20 Gas	kg	0	0	0	0	0	0	29,054	–	29,040	29,040	29,040	0	0	32,066	32,066
Na	kg	0	0	0	0	0	0	0	0	0	0	0	0	0	0	0
SO2 GAS	ppm	0	0	0	0	0	0	1.47	0	1.06	1.06	1.06	0	0	1.05	1.05
NOx GAS	ppm	0	0	0	0	0	0	4,257	0	3,068	3,068	3,068	0	0	82	82
HCl GAS	ppm	0	0	0	0	0	0	0.14	0	0.1	0.1	0.1	0	0	0.1	0.1
137Cs	Ci	0	0	0	0	0	0	9.3E-08	0	9.3E-08	9.3E-08	9.3E-08	0	0	9.3E-08	9.3E-08
99Tc	Ci	0	0	0	0	0	0	3.7E-09	0	3.7E-09	3.7E-09	3.7E-09	0	0	3.7E-09	3.7E-09
TRU	Ci	0	0	0	0	0	0	5.4E-13	0	5.4E-13	5.4E-13	5.4E-13	0	0	5.4E-13	5.4E-13
129I	Ci	0	0	0	0	0	0	1.1E-10	0	1.1E-10	1.1E-10	1.1E-10	0	0	1.1E-10	1.1E-10

NOTES:

1. NOx EMISSION AT STREAM 46 WILL BE LESS THAN 1.5lbs/hr.
2. VALVES ARE SHOWN TO INDICATE PROCESS INTENT
3. NNF – NORMALLY NO FLOW

THIS DRAWING CONTAINS PROCESS INFORMATION THAT IS PROPRIETARY TO AMEC. RESTRICTIONS ON USE OF THIS INFORMATION ARE CONTAINED IN CONTRACT #17902 BETWEEN AMEC AND CH2M HILL HANFORD GROUP.

DRAWING TRACEABILITY LIST: DWG NO | TITLE
REFERENCES: REF NUMBER | TITLE
NEXT USED ON

REVISIONS: NTS | REV NO | DESCRIPTION | REV BY DATE | REV BY | CHECKED BY | ENGR COMPANY

In making requests for transmittal of data by any electronic media, the Company receiving such data agrees that AMEC Americas Limited cannot be held responsible for users of the data outside of or beyond the scope of our original agreement. Also, because data stored in electronic media or transmitted by electronic means can deteriorate undetected or be modified without the consultant's knowledge, the Company receiving data agrees that AMEC Americas Limited cannot be held liable for the compatibility, completeness or correctness of the data.

Rev.	REVISION DESCRIPTION	Date	By	Ch'k'd	Approved Date	Approved By
A	ISSUED FOR CLIENT COMMENT	10 MAR 04	SLC		KN	TH

AMEC DRAWING NO: F-143643-00-A-0026 REV: A

U.S. DEPARTMENT OF ENERGY
Office of River Protection

amec

FULL DBVS
TRI-MER AND SCR
SINGLE BLOCK DIAGRAM

SIZE: F | BLDG NO | BLOCK NO | DWG NO | REV
SCALE: NTS | SHEET | OF

Figure B-7. Phase 1 WRS Flow Diagram

NOMINAL STREAM CONDITIONS

STREAM NUMBER	1	2	3	4	5	6	7	8	9	10
STREAM NAME	TOTAL WATER ADDITION	BACK FLUSH WATER	TRANSFER DILUTION WATER	TRANSFER LINE FLUSH TO SY-102	BRINE TO SY-102 1ST BATCH	BRINE TO STAGING TANK	DILLUTION WATER TO STAGING TANK	BRINE TO SY-102 2ND BATCH	BRINE TO SY-102 TOTAL	BRINE TO DVBS TOTAL
OPERATING PRESSURE (PSIG)	80-100	80-100	80-100	80-100	10	5	80-100	10	–	–
TEMPERATURE (°F)	–	110-120	70-90	70-90	70-90	70-90	70-90	70-90	–	–
SPECIFIC GRAVITY (H_2O= 1.0)	1.0	1.0	1.0	1.0	1.35	1.35	1.0	1.35	–	–
FLOW RATE (GPM)	–	20	1-2	20	3-4	3-4	1-2	3-4	–	–
VOLUME (GAL)	5023	3000	1003.5	734	2000	714	286	1300	3300	1000
MASS (LB)	41846	24990	8359	6114	16660	5948	2382	10829	27489	8330

SYMBOL LEGEND:

STREAM SOURCE/DESTINATION (THIS PAGE ONLY)

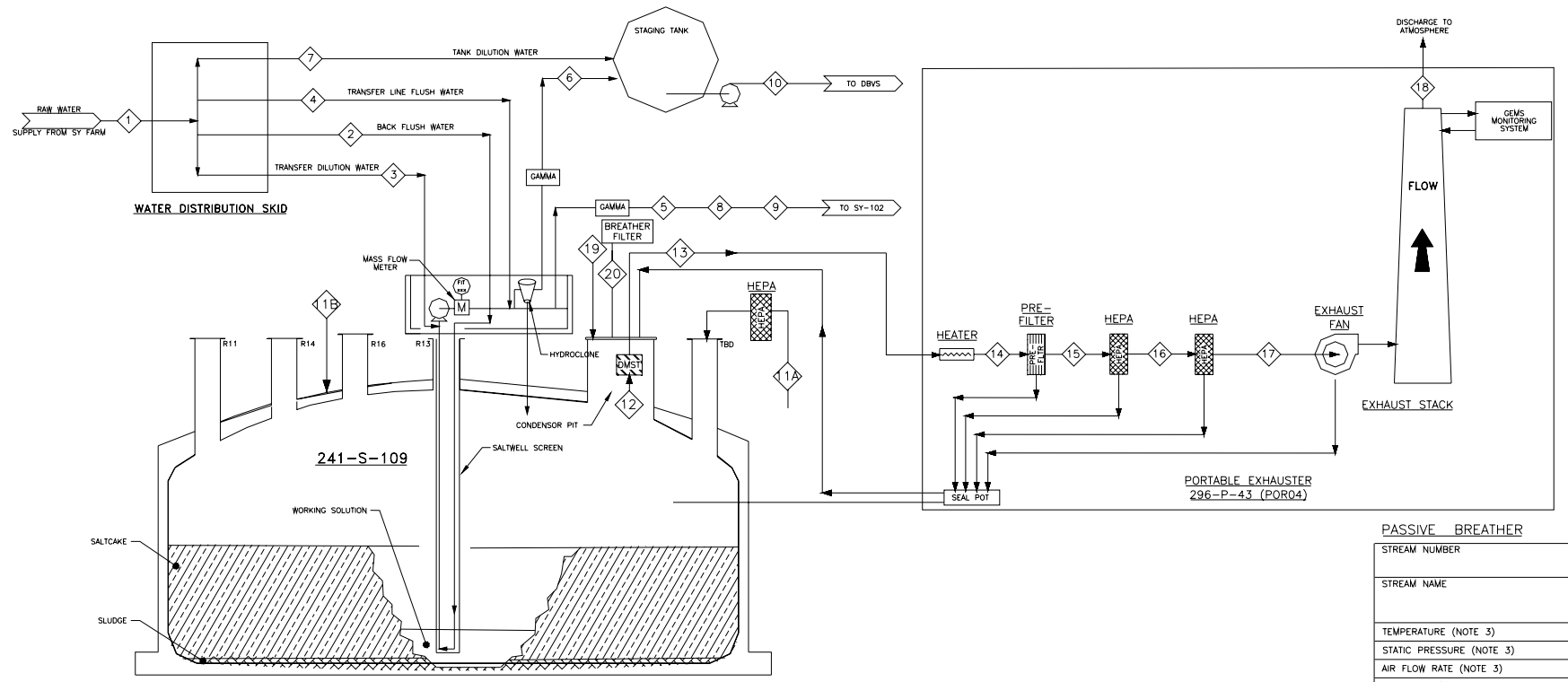

PASSIVE BREATHER

STREAM NUMBER		19	20
STREAM NAME		AMBIENT IN LEAKAGE	BREATHER RATE
TEMPERATURE (NOTE 3)	(DEGREE F)	-25 TO 115	-25 TO 115
STATIC PRESSURE (NOTE 3)	(IN W.G.)	0	0
AIR FLOW RATE (NOTE 3)	(SCFM)	0 - 4	0 - 4
RELATIVE HUMIDITY (NOTE 3)	(PERCENT)	30	30 - 100
SPECIFIC HUMIDITY (NOTE 3)	(IBW/IBA)	0.0001 - 0.078	0.0001 - 0.078
HYDROGEN CONCENTRATION	(% LFL)	0	30000 - 38000
VOC CONCENTRATION	(PPM)	0	340 - 400
AMMONIA CONCENTRATION	(PPM)	0	3100 - 3700
CONDENSABLES	(GPM)	–	–

NORMAL OPERATING CONDITIONS
CLEAN FILTERS FOR EXHAUSTER

STREAM NUMBER		11A	11B	12	13	14	15	16	17	18	19
STREAM NAME		AMBIENT INLET FLOW	AMBIENT INFILTRATION	AIR LEAVING TANK	AIR LEAVING DEMISTER	AIR LEAVING HEATER	AIR LEAVING PRE-FILTER	AIR LEAVING 1ST HEPA	AIR LEAVING 2ND HEPA	STACK EXHAUST	RAW WATER
TEMPERATURE (NOTE 3)	(DEGREE F)	70	70	81	81	101	101	101	101	101	45-55
STATIC PRESSURE (NOTE 3)	(IN W.G.)	0	0	-3.0	-4.0	-4.3	-4.5	-5.5	-8.5	0	–
AIR FLOW RATE (NOTE 3)	(SCFM)	250	250	500	500	500	500	500	500	500	–
RELATIVE HUMIDITY (NOTE 3)	(PERCENT)	30	30	100	100	54	54	54	54	54	–
SPECIFIC HUMIDITY (NOTE 3)	(IBW/IBA)	0.0047	0.0047	0.0232	0.0232	0.0232	0.0232	0.0232	0.0232	0.0232	–
HYDROGEN CONCENTRATION	(PPM)	0	0	4300	4300	4300	4300	4300	4300	4300	–
VOC CONCENTRATION	(PPM)	0	0	440	440	440	440	440	440	440	–
AMMONIA CONCENTRATION	(PPM)	0	0	48	48	48	48	48	48	48	–
CONDENSABLES	(GPM)	–	–	–	–	–	–	–	–	–	–

NOTES:

1. RAW WATER SUPPLY PRESSURE IS 80 - 100 PSI
2. PASSIVE BREATHER FILTER FLOW RATE BASED ON RPP-5926, REV. 2 APPENDIX D NORMAL RATE.
3. VENTILATION PERAMETERS BASED ON CALCULATION TBD. TEMPERATURES ARE MAXIMUM.
4. VALUES IN EXHAUSTER TABLES ARE FROM S-112. VALUES FOR S-109 WILL BE DETERMINED.

ESSENTIAL DRAWING

DWG NO	TITLE
DRAWING TRACEABILITY LIST	

REF NUMBER	TITLE
REFERENCES	
NEXT USED ON	END ITEM

REV NO	REV DATE	DESCRIPTION	ENGR	ENGR COMPANY
REVISIONS				

NAME / DATE / COMPANY
DRAWN BY
DESIGN AUTHORITY

PROJECT: S-109 ACCELERATED WASTE RETRIEVAL SYSTEM

U.S. DEPARTMENT OF ENERGY
Office of River Protection

PHASE ONE PROCESS FLOW DIAGRAM

SIZE F | BLDG NO 241S | PROC NO 7004 | DWG NO BK NORTON | REV A
SCALE NONE | EST XXXXXX | SHEET 2 OF 4
PLOTID

Figure B-8. Phase 2 WRS Flow Diagram

NOMINAL STREAM CONDITIONS

STREAM NUMBER	1	2	3	4	5	6	7	8	9	10	11	12
STREAM NAME	TOTAL WATER ADDITION 46 BATCHES	WATER ADDITION TO S-109 1ST BATCH	TRANSFER DILUTION WATER 1ST BATCH TO SY-102	BRINE ADDITION TO SY-102 1ST BATCH	TRANSFER DILUTION WATER 1ST BATCH TO DBVS	BRINE ADDITION TO DBVS 1ST BATCH	WATER ADDITION TO S_109 TOTAL	TRANSFER DILUTION WATER TOTAL	TRANSFER LINE FLUSH TO SY-102	TRANSFER LINE FLUSH TO DBVS	ADDITION TO SY-102 TOTAL	TOTAL TRANSFER TO DBVS
OPERATING PRESSURE (PSIG)	–	80–100	80–100	10	80–100	10	80–100	80–100	80–100	80–100	10	10
TEMPERATURE (°F)	–	110–120	70–90	70–90	70–90	70–90	110–120	70–90	70–90	70–90	70–90	70–90
SPECIFIC GRAVITY (H_2O= 1.0)	1.0	1.0	1.0	1.35	1.0	1.25	1.0	1.0	1.0	1.0	1.35	1.25
FLOW RATE (GPM)	–	20	2–3	8–10	2–3	8–10	–	–	20	20	–	–
VOLUME (GAL)	677946	7500	187.5	750	7031	14063	345000	332062.5	734	147	35234	647022
MASS (LB)	5647267	62475	1562	6248	58570	117141	2873850	2766081	6114	1223	293499	5389692

SYMBOL LEGEND: (THIS PAGE ONLY)

STREAM SOURCE/DESTINATION

The Phase 2 volume going to the DST is a partial amount.

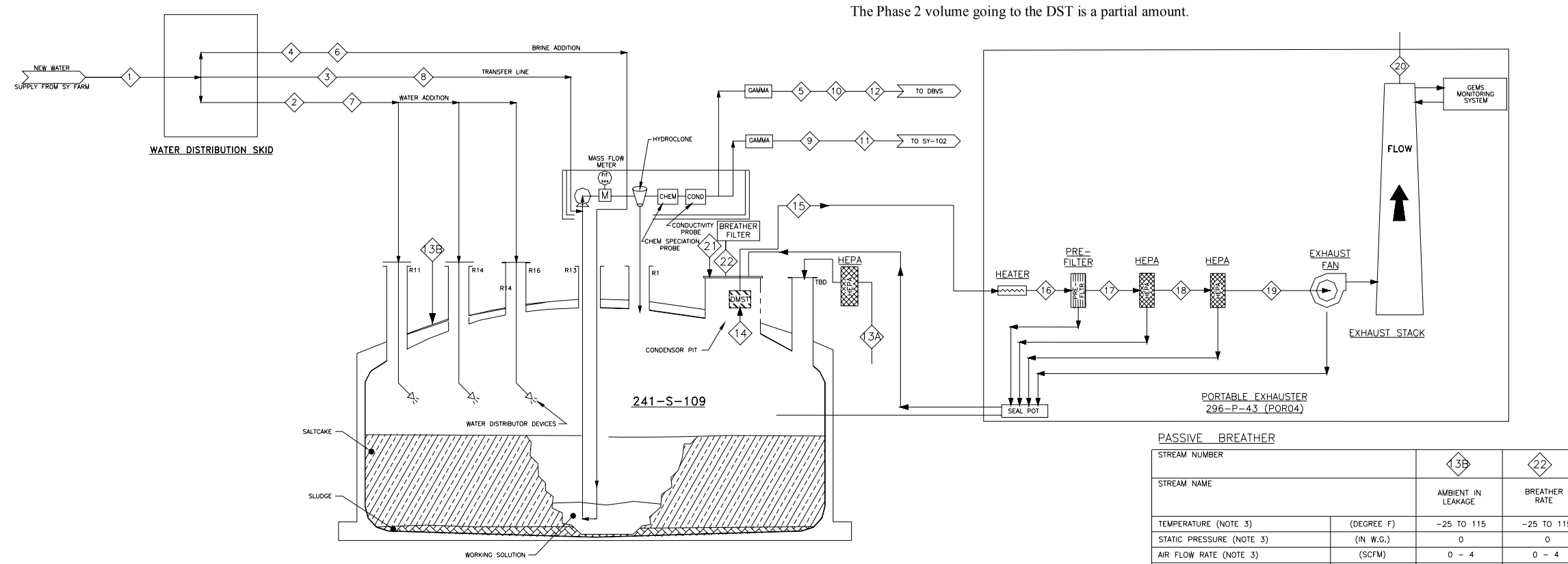

PASSIVE BREATHER

STREAM NUMBER		13B	22
STREAM NAME		AMBIENT IN LEAKAGE	BREATHER RATE
TEMPERATURE (NOTE 3)	(DEGREE F)	–25 TO 115	–25 TO 115
STATIC PRESSURE (NOTE 3)	(IN W.G.)	0	0
AIR FLOW RATE (NOTE 3)	(SCFM)	0 – 4	0 – 4
RELATIVE HUMIDITY (NOTE 3)	(PERCENT)	30	30 – 100
SPECIFIC HUMIDITY (NOTE 3)	(IBW/IBA)	0.0001 – 0.078	0.0001 – 0.078
HYDROGEN CONCENTRATION	(% LFL)	0	30000 – 38000
VOC CONCENTRATION	(PPM)	0	340 – 400
AMMONIA CONCENTRATION	(PPM)	0	3100 – 3700
CONDENSABLES	(GPM)	–	–

NORMAL OPERATING CONDITIONS
CLEAN FILTERS FOR EXHAUSTER

STREAM NUMBER		13A	13B	14	15	16	17	18	19	20	21
STREAM NAME		AMBIENT INLET FLOW	AMBIENT INFILTRATION	AIR LEAVING TANK	AIR LEAVING DEMISTER	AIR LEAVING HEATER	AIR LEAVING PRE-FILTER	AIR LEAVING 1ST HEPA	AIR LEAVING 2ND HEPA	STACK EXHAUST	RAW WATER
TEMPERATURE (NOTE 3)	(DEGREE F)	70	70	81	81	101	101	101	101	101	45–55
STATIC PRESSURE (NOTE 3)	(IN W.G.)	0	0	–3.0	–4.0	–4.3	–4.5	–5.5	–8.5	0	–
AIR FLOW RATE (NOTE 3)	(SCFM)	250	250	500	500	500	500	500	500	500	–
RELATIVE HUMIDITY (NOTE 3)	(PERCENT)	30	30	100	100	54	54	54	54	54	–
SPECIFIC HUMIDITY (NOTE 3)	(IBW/IBA)	0.0047	0.0047	0.0232	0.0232	0.0232	0.0232	0.0232	0.0232	0.0232	–
HYDROGEN CONCENTRATION	(PPM)	0	0	4300	4300	4300	4300	4300	4300	4300	–
VOC CONCENTRATION	(PPM)	0	0	440	440	440	440	440	440	440	–
AMMONIA CONCENTRATION	(PPM)	0	0	48	48	48	48	48	48	48	–
CONDENSABLES	(GPM)	–	–	–	–	–	–	–	–	–	–

NOTES:

1. RAW WATER SUPPLY PRESSURE IS 80 – 100 PSI
2. PASSIVE BREATHER FILTER FLOW RATE BASED ON RPP-5926, REV. 2 APPENDIX D NORMAL RATE.
3. VENTILATION PERAMETERS BASED ON CALCULATION TBD. TEMPERATURES ARE MAXIMUM.
4. VALUES IN EXHAUSTER TABLES ARE FROM S-112. VALUES FOR S-109 WILL BE DETERMINED.

ESSENTIAL DRAWING

PROJECT: S-109 ACCELERATED WASTE RETRIEVAL SYSTEM
U.S. DEPARTMENT OF ENERGY
Office of River Protection
PHASE TWO PROCESS FLOW DIAGRAM
BK NORTON

DWG NO | TITLE
DRAWING TRACEABILITY LIST
REF NUMBER | TITLE
REFERENCES
NEXT USED ON END ITEM
REVISIONS

Appendix F
ICV® Container Refractory Information

This page intentionally left blank.

APPENDIX F

ICV® CONTAINER REFRACTORY INFORMATION

This page intentionally left blank.

Information to be provided. As discussed with the Washington State Department of Ecology on April 22, 2004, provision of this information will be required as a permit condition.

This page intentionally left blank.