SECTION 12

DRAWINGS

MIXED WASTE FACILITY
RCRA/TSCA PERMIT APPLICATION

PERMA-FIX NORTHWEST RICHLAND, INC.

RICHLAND, WASHINGTON

Drawing Number	Drawing Description	
DWG-SITE-CIVIL-001	Sheet 1 of 1	Facility Layout
DWG-SITE-CIVIL-003	Sheet 1 of 2	Site Topography
DWG-SITE-CIVIL-003	Sheet 2 of 2	Site Topography Survey Notes
DWG-SITE-CIVIL-004	Sheet 1 of 1	Evacuation Routes and Assembly Areas
DWG-SITE-CIVIL-005	Sheet 1 of 1	Building 17 Spill Kit Location
DWG-MW-CIVIL-001	Sheet 1 of 1	Traffic Plan
DWG-MW-CIVIL-002	Sheet 1 of 1	Roof Drainage
DWG-MW-STRUC-001	Sheet 1 of 2	Building 13 Floor Slopes and Curbs
DWG-MW-STRUC-001	Sheet 2 of 2	Building 13 Floor Slopes and Curbs Details
DWG-MW-GA-001	Sheet 1 of 1	Building 13 General Arrangement
DWG-STB-GA-FAC-001A	Sheet 1 of 1	Non-Thermal Area General Arrangement
DWG-MW-GA-003	Sheet 1 of 1	Building 13 Annunciation Equipment
DWG-MW-GA-004	Sheet 1 of 1	Building 13 Emergency Response Equipment
DWG-MW-GA-007	Sheet 1 of 2	Room WSB-4 Hazmat Cabinets and Typical Layout
DWG-MW-GA-007	Sheet 2 of 2	Room Hazmat Cabinets Details
DWG-MW-GA-008	Sheet 1 of 1	Storage Rooms WSB-1, WSB-2, WSB-3 Typical Layout
DWG-MW-GA-009	Sheet 1 of 1	TP-07 In-Drum Compactor
DWG-MW-GA-010	Sheet 1 of 1	Rooms WSB-4, SB-03 Typical Layout
DWG-GVB-GA-FAC-001	Sheet 1 of 1	Thermal Area, General Arrangement
DWG-STB-GA-SB02-002	Sheet 1 of 1	Room SB-02 HAZMAT Cabinet Location and Detail
DWG-STB-GA-TP01-001	Sheet 1 of 3	TP-01 Size Reduction and Screening Top View
DWG-STB-GA-TP01-001	Sheet 2 of 3	TP-01 Size Reduction and Screening Side View
DWG-STB-GA-TP01-001	Sheet 3 of 3	TP-01 Size Reduction and Screening Details
DWG-STB-GA-TP07-001	Sheet 1 of 4	TP-07 Supercompactor
DWG-TP10-001	Sheet 1 of 1	TP-10 Extraction Mixer
DWG-STB-GA-TT01-001	Sheet 1 of 3	TT-01 High Capacity Mixing Top View
DWG-STB-GA-TT01-001	Sheet 2 of 3	TT-01 High Capacity Mixing Front View
DWG-STB-GA-TT01-001	Sheet 3 of 3	TT-01 High Capacity Mixing Side View
DWG-STB-GA-TT02-001	Sheet 1 of 3	TT-02 Low Capacity Mixing Top View
DWG-STB-GA-TT02-001	Sheet 2 of 3	TT-02 Low Capacity Mixing Front View
DWG-STB-GA-TT02-001	Sheet 3 of 3	TT-02 Low Capacity Mixing Side View
DWG-STB-GA-TT03-001	Sheet 1 of 2	TT-03 In-Container Mixing Top View
DWG-STB-GA-TT03-001	Sheet 2 of 2	TT-03 In-Container Mixing Front and Side Views
DWG-TT03-002	Sheet 1 of 1	TT-03 Drum Roller
DWG-STB-GA-TT05-001	Sheet 1 of 2	TT-05 Physical Extraction
DWG-STB-GA-TT05-001	Sheet 2 of 2	TT-05 Physical Extraction
DWG-STB-GA-TT09-001	Sheet 1 of 1	TT-09 Mercury Amalgamation - Bulk
DWG-STB-GA-TT10-001	Sheet 1 of 3	TT-10 Debris Washing
DWG-STB-GA-TT10-001	Sheet 2 of 3	TT-10 Debris Washing
DWG-STB-GA-TT10-001	Sheet 3 of 3	TT-10 Debris Washing
100707-M-100	Sheet 1 of 1	Rail Loading Area Pad
100707-S-100	Sheet 1 of 1	Rail Loading Area Pad Construction Details
100707-M-101	Sheet 1 of 1	Truck Loading Area Pad
100707-S-101	Sheet 1 of 1	Truck Loading Area Pad Construction Details
MWT-RTD-PID-001a	Sheet 1 to 7	Thermal Desorber P&ID Systems
32004-PID-200	Sheet 1 of 1	Thermal Desorber P&ID
32004-PID-201	Sheet 1 of 1	Thermal Desorber Condenser P&ID
32004-PID-300	Sheet 1 of 1	Thermal Desorber Organic Tank P&ID
P&ID Identification Letters		ISA Instrumentation Symbols and Identification Excerpt

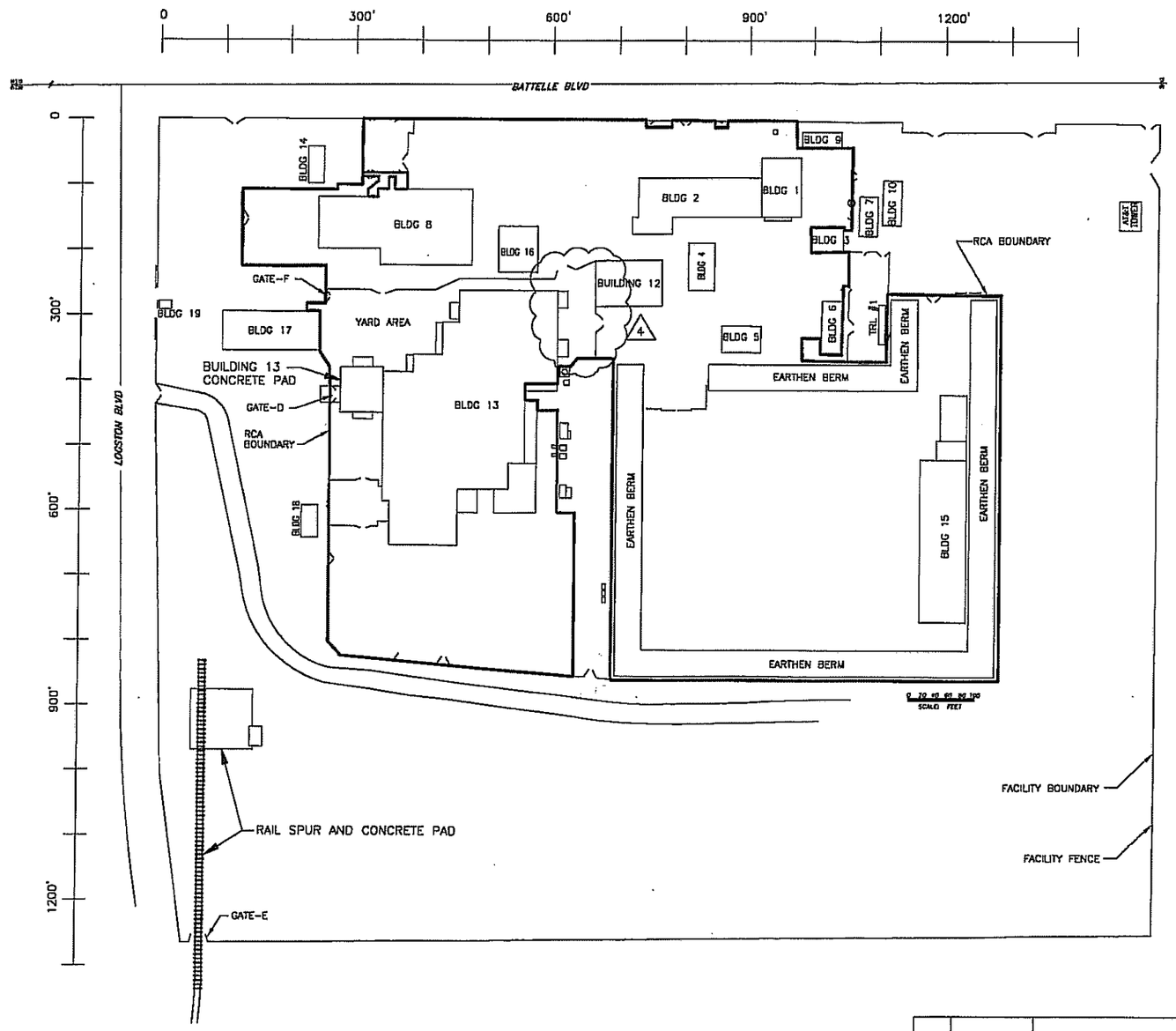

north

BUILDING LEGEND

BLDG 1	LOW LEVEL NON THERMAL (LLNT)
BLDG 2	LOW LEVEL NON THERMAL (LLNT)
BLDG 3	WAREHOUSE AND MACHINE SHOP
BLDG 4	RAD STORAGE
BLDG 5	MAINTENANCE SHOP
BLDG 6	CLEAN RELEASE
BLDG 7	OFFICE
BLDG 8	LOW LEVEL THERMAL (LLT)
BLDG 9	OFFICE
BLDG 10	OFFICE
BLDG 12	RAD STORAGE
BLDG 13	MIXED WASTE (MW)
BLDG 14	OFFICE
BLDG 15	RAD STORAGE
BLDG 16	LOW LEVEL THERMAL (LLTH)
BLDG 17	ADMINISTRATION
BLDG 18	AIR AND NITROGEN COMPRESSORS
TRL #1	WHOLE BODY COUNTER
BLDG 19	GUARD SHACK
RCA	RADIOLOGICAL CONTROL AREA

PROFESSIONAL ENGINEERING CERTIFICATION

I certify under penalty of law that this document and all attachments were prepared under my direction or supervision in accordance with a system designed to assure that qualified personnel properly gather and evaluate the information submitted. Based upon my inquiry of the person or persons who manage the system, or those persons directly responsible for gathering the information, the information submitted is, to the best of my knowledge and belief, true, accurate, and complete. I am aware that there are significant penalties for submitting false information, including the possibility of fine and imprisonment for knowing violations.

REV	DATE	DESCRIPTION	REFERENCES
4	02-22-11	REVISED FENCELINE BY BUILDING #12	
3	02-21-11	ADDED RAIL SPUR AND CONCRETE PAD AND GATE "E". ADDED BUILDING 13 YARD PAD. REVISED FENCELINE FROM BUILDING 17 TO GATE "D".	
2	11-08-10	ADDED GATE DESIGNATION 'D' & 'F' AND REVISED FENCELINE @ GATE 'F' REMOVED BLDG 11 & TRLR #2	
1	01/06/09	PERMIT RENEWAL	
0	10/24/08	INITIAL AS-BUILT	60001-C-001 REV 0

PermaFix Northwest Richland, Inc

PERMAFIX NORTHWEST RICHLAND, INC.
2025 BATTELLE BLVD.
RICHLAND, WA

DATE	
DRAWN	S.NORTON
ENGR	
QA	

PERMAFIX NORTHWEST SITE
FACILITY LAYOUT

SCALE: AS SHOWN | SHT: 1 OF 1

PERMAFIX-DWG-SITE-CIVIL-001 | REV 4

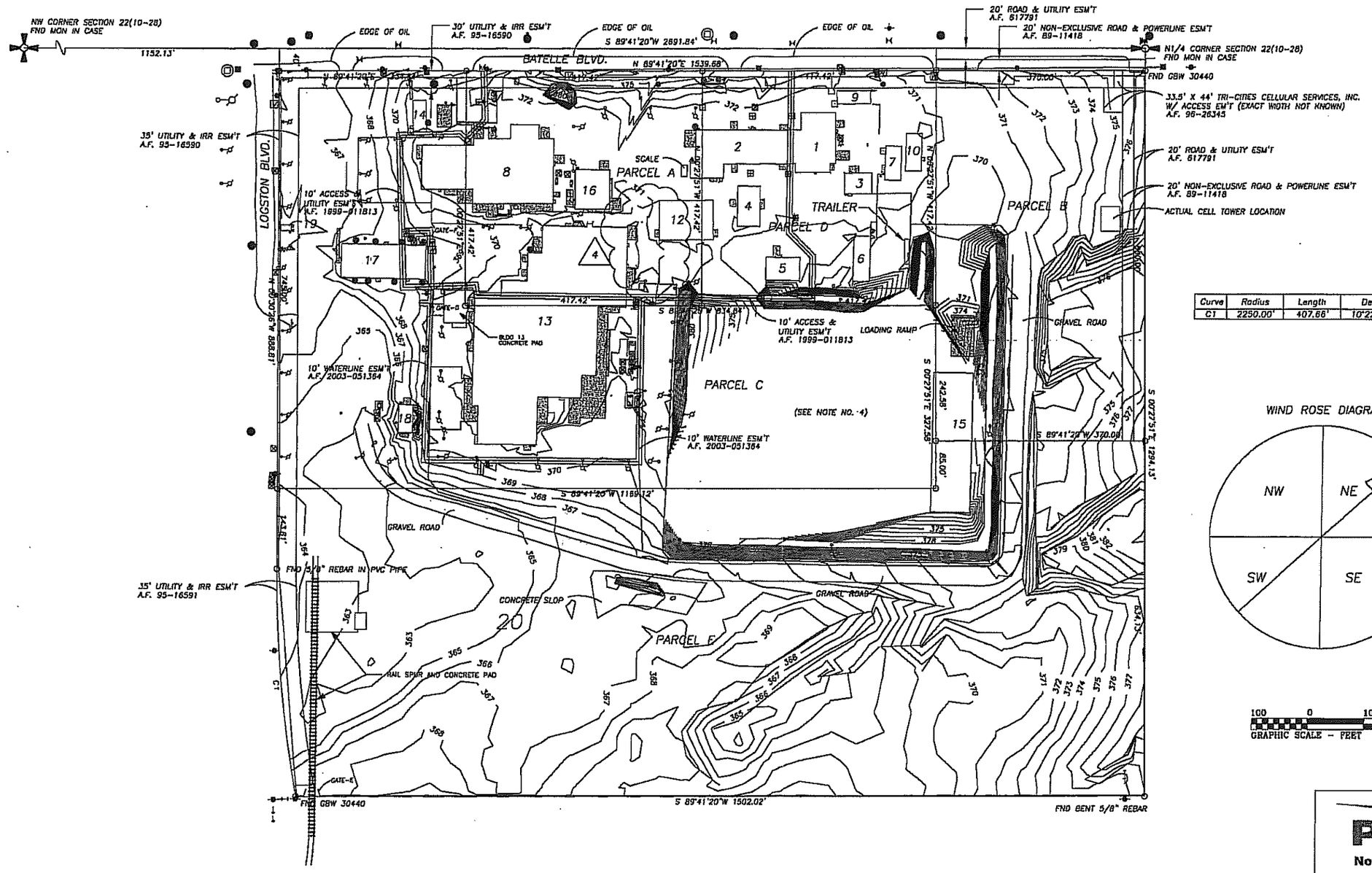

Curve	Radius	Length	Delta	Chord	Chord Bear.
C1	2250.00'	407.66'	10°22'51"	407.10'	N 05°40'38" W

WIND ROSE DIAGRAM

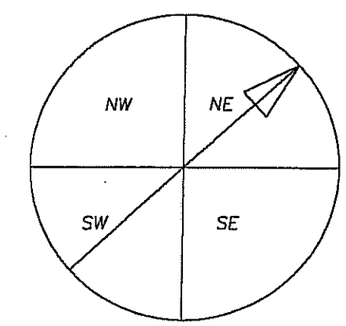

100 0 100 200 300
GRAPHIC SCALE - FEET

PROFESSIONAL ENGINEERING CERTIFICATION
I certify under penalty of law that this document and all attachments were prepared under my direction or supervision in accordance with a system designed to assure that qualified personnel properly gather and evaluate the information submitted. Based upon my inquiry of the person or persons who manage the system, or those persons directly responsible for gathering the information, the information submitted is, to the best of my knowledge and belief, true, accurate, and complete. I am aware that there are significant penalties for submitting false information, including the possibility of fine and imprisonment for knowing violations.

REV	DATE	DESCRIPTION	REFERENCES
4	02-22-11	REVISED FENCELINE BY BUILDING 12.	
3	02-21-11	ADDED RAIL SPUR AND CONCRETE PAD. ADDED GATE "E" IN SOUTH FENCELINE ON RAIL SPUR. ADDED BUILDING 13 YARD PAD. REVISED FENCELINE FROM BUILDING 17 TO GATE "D".	
2	11-08-10	ADDED GATE DESIGNATION 'D' & 'F' AND REVISED FENCELINE @ GATE 'F' REMOVED BLDG 11 & TRLR #2	
1	01/07/09	PERMIT RENEWAL	ALTA/ACSM LAND TITLE SURVEY WORLEY SURVEYING SERVICE, INC. 6/04/07
0	01/07/09	INITIAL AS-BUILT	

PermaFix
Northwest Richland, Inc

PERMAFIX NORTHWEST RICHLAND, INC.
2025 BATTELLE BLVD.
RICHLAND, WA

(AS-BUILT)

PERMAFIX NORTHWEST RICHLAND
SITE TOPOGRAPHY

DRAWN S.NORTON
ENGR
QA

SCALE: AS SHOWN SHT: 1 OF 2

PERMAFIX-DWG-SITE-CIVIL-003 REV 4

ALTA/ACSM LAND TITLE SURVEY

PORTION OF THE NW1/4 SECTION 22, T. 10 N., R 28 E, W.M.
RICHLAND, BENTON COUNTY, WASHINGTON

DESCRIPTION

PARCEL A — PARCEL ID: 1-2208-200-0006-000

THAT PORTION OF THE NORTHWEST QUARTER OF SECTION 22, TOWNSHIP 10 NORTH, RANGE 28 EAST, W.M., RECORDS OF BENTON COUNTY, WASHINGTON DESCRIBED AS FOLLOWS:

BEGINNING AT THE NORTH QUARTER CORNER OF SAID SECTION 22; THENCE SOUTH 89°41'20" WEST 787.42 FEET ALONG THE NORTH LINE OF SAID SECTION 22; THENCE SOUTH 00°27'51" EAST 40.00 FEET, PARALLEL TO THE EAST LINE OF SAID NORTHWEST QUARTER AND THE TRU POINT OF BEGINNING; THENCE CONTINUING SOUTH 00°27'51" EAST, 417.42 FEET; THENCE SOUTH 89°41'20" WEST, 417.42 FEET, TO A POINT 40 FEET SOUTH OF THE NORTH LINE OF SAID SECTION 22; THENCE NORTH 89°41'20" EAST, 417.42 FEET TO THE TRUE POINT OF BEGINNING.

4.00 ACRES, MORE OR LESS

PARCEL B — PARCEL ID: 1-2208-200-0001-000

THE EAST 370 FEET OF THE NORTH 700 FEET AS MEASURED ALONG THE NORTH AND EAST LINESOF THE NORTHEAST QUARTER OF THE NORTHWEST QUARTER OF SECTION 22, TOWNSHIP 10 NORTH, RANGE 28 EAST, W.M., RECORDS OF BENTON COUNTY, WASHINGTON.

5.61 ACRES, MORE OR LESS

PARCEL C — PARCEL ID: 1-2208-200-0009-000

THAT PORTION OF THE NORTHWEST QUARTER OF SECTION 22, TOWNSHIP 10 NORTH, RANGE 28 EAST, W.M., RECORDS OF BENTON COUNTY, WASHINGTON DESCRIBED AS FOLLOWS:

BEGINNING AT THE NORTH QUARTER CORNER OF SAID SECTION 22; THENCE SOUTH 89°41'20" WEST, 1539.71 FEET ALONG THE NORTH LINE OF SAID SECTION 22; THENCE SOUTH 00°30'26" EAST, 40.00 FEET TO THE TRUE POINT OF BEGINNING; THENCE CONTINUING SOUTH 00°30'26" EAST, 745.00 FEET; THENCE NORTH 89°41'20" EAST 1169.12 FEET; THENCE NORTH 00°27'51" WEST, 327.58 FEET TO THE SOUTHEAST CORNER OF A RECORD OF SURVEY, RECORDED IN VOLUME 1 OF SURVEYS, PAGE 1192, RECORDS OF BENTON COUNTY, WASHINGTON; THENCE SOUTH 89°41'20" WEST, 834.84 FEET ALONG THE SOUTH LINE OF SAID RECORD SURVEY 1192 TO THE SOUTHWEST CORNER OF RECORD OF SURVEY, RECORDED IN VOLUME 1 OF SURVEYS, PAGE 1277, RECORDS OF BENTON COUNTY, WASHINGTON; THENCE NORTH 00°27'51" WEST ALONG THE WEST LINE OF SAID RECORD OF SURVEY NO. 1277; THENCE SOUTH 89°41'20" WEST, 334.84 FEET TO THE POINT OF BEGINNING

12.00 ACRES, MORE OR LESS

PARCEL D — PARCEL ID: 1-2208-200-0004-000

THAT PORTION OF THE NORTHWEST QUARTER OF SECTION 22, TOWNSHIP 10 NORTH, RANGE 28 EAST, W.M., RECORDS OF BENTON COUNTY, WASHINGTON DESCRIBED AS FOLLOWS:

BEGINNING AT THE NORTH QUARTER CORNER OF SAID SECTION 22, THENCE ALONG THE NORTH LINE OF SAID SECTION 22, SOUTH 89°41'20" WEST, 370.00 FEET; THENCE SOUTH 00°27'46" EAST, PARALLEL TO THE EAST LINE OF SAID NORTHWEST QUARTER, 40.00 FEET TO THE TRUE POINT OF BEGINNING; THENCE CONTINUING SOUTH 00°27'46" EAST, 417.42 FEET; THENCE SOUTH 89°41'20" WEST, 417.42 FEET; THENCE SOUTH 89°41'20" WEST, 417.42 FEET; THENCE NORTH 00°27'46" WEST 417.42 FEET, TO A POINT 40.00 FEET SOUTH OF THE NORTH LINE OF SECTION 22; THENCE NORTH 89°41'20" EAST, 417.42 FEET TO THE TRUE POINT OF BEGINNING.

4.00 ACRES, MORE OR LESS

PARCEL E — PARCEL ID: 1-2208-200-0011-000

A PARCEL OF LAND SITUATED IN THE NORTHWEST QUARTER OF SECTION 22, TOWNSHIP 10 NORTH, RANGE 28 EAST, W.M., RECORDS OF BENTON COUNTY, WASHINGTON, DESCIBED AS FOLLOWS:

BEGINNING AT THE NORTHEAST CORNER OF SAID NORTHWEST QUARTER; THENCE SOUTH 89°41'20" WEST ALONG THE NORTH LINE OF SAID NORTHWEST QUARTER A DISTANCE OF 1539.71 FEET; THENCE SOUTH 00°30'26" EAST A DISTANCE OF 785.00 FEET TO THE TRUE POINT OF BEGINNING AND BEING THE SOUTHWEST CORNER OF A PARCEL RECORDED UNDER AUDITOR'S FILE NO. 91-24454; THENCE NORTH 89°41'20" EAST ALONG THE SOUTH LINE OF SAID AUDITOR'S FILE NO. 91-24454 A DISTANCE OF 1169.12 FEET TO THE SOUTHEAST CORNER OF SAID AUDITOR'S FILE NO. 91-24454; THENCE NORTH 00°27'51" WEST A DISTANCE OF 85.00 FEET TO THE SOUTHWEST CORNER OF A PARCEL RECORDED UNDER AUDITOR'S FILE NO. 617791; THENCE NORTH 89°41'20" EAST ALONG THE SOUTH SAID AUDITOR'S FILE NO. 617791 A DISTANCE OF 370.00 FEET TO THE EAST LINE OF SAID NORTHWEST QUARTER; THENCE SOUTH 00°27'51" EAST ALONG THE EAST LINE OF SAID NORTHWEST QUARTER A DISTANCE OF 634.12 FEET; THENCE SOUTH 89°41'20" WEST A DISTANCE OF 1502.02 FEET TO A POINT ON CURVE; THENCE ALONG A CURVE TO THE RIGHT HAVING A CENTRAL ANGLE OF 10°22'51", A RADIUS OF 2250.00 FEET AND A CHORD BEARING OF NORTH05°40'38" WEST AND A CHORD DISTANCE OF 407.10 FEET TO A POINT OF TANGENT; THENCE NORTH 00°30'26" WEST A DISTANCE OF 143.81 FEET TO THE TRUE POINT OF BEGINNING.

20.01 ACRES, MORE OR LESS

LEGEND

- BOLLARD
- PROPANE TANK
- HANDICAP PARKING
- ELEC PANEL
- POWER POLE
- GUY WIRE
- YARD LIGHT
- LIGHT POLE
- ELECTRICAL JBOX
- ELECTRICAL METER
- ELECTRICAL TRANSFORMER
- ELECTRICAL VAULT
- WATER MANHOLE
- STORM DRAIN MANHOLE
- CATCH BASIN
- SANITARY SEWER MANHOLE
- GAS SHUTOFF
- CLEAN OUT
- GAS REGULATOR
- SPRINKLER HEAD
- AC UNIT
- WATER SPIGOT
- GENERATOR
- WATER VALVE
- WATER METER
- WATER SERVICE
- NATURAL GAS TANK
- IRRIGATION CONTROL VALVE
- IRRIGATION VALVE BOX
- FIRE HYDRANT
- FIRE DEPT SPRINKLER CONNECTION
- GAS METER
- GAS CONNECT
- GAS VALVE
- TELEPHONE JBOX
- TELEPHONE MANHOLE
- CABLE TV JBOX
- TELEPHONE VAULT
- MAIL BOX
- SWITCH STAND
- SIGN
- —OH— OVERHEAD POWER LINE
- —P— UNDER GROUND POWER LINE
- —D— STORM DRAIN LINE
- —S— SANITARY SEWER LINE
- —W— WATER LINE
- —T— UNDERGROUND TELEPHONE LINE
- —CTV— UNDERGROUND CABLE TV LINE
- —G— UNDERGROUND NATURAL GAS LINE
- —IRR— UNDERGROUND IRRIGATION LINE
- —X— FENCE
- CONCRETE

NOTES

1. BENTON-FRANKLIN TITLE COMPANY, TITLE REPORT DATED MAY 2, 2007, ORDER NO. 88614 SPECIAL EXCEPTIONS:
   - 1-7, 13, 17, 18, & 21-23 ARE NOT PLOTTABLE EXCEPTIONS.
   - 8 HAS NO EFFECT ON THIS PROPERTY AS DESCRIBED HEREON.
   - 9-12, & 14-16, EXIST AS SHOWN ON FACE OF THIS MAP.
   - 24; ENCROACHMENTS OR QUESTIONS OF LOCATION, BOUNDARY AND AREA AND PUBLIC OR PRIVATE EASEMENTS---EXIST AS SHOWN ON THE FACE OF THIS MAP. THE REMAINING LANGUAGE IN THIS EXCEPTION IS NOT A PLOTTABLE EXCEPTION.
3. ACCORDING TO THE FEDERAL EMERGENCY MANAGEMENT AGENCY'S FLOOD INSURANCE RATE MAP COMMUNITY PANEL NO. 5355330005E THIS PROPERTY IS LOCATED WITHIN FLOOD ZONE "C" (AREAS OF MINIMAL FLOOD HAZARDS)
4. THE AREA LOCATED IN THE CENTER OF PROPERTY, WHERE NO TOPOGRAPHIC DATA WAS OBTAINED, WAS DEEMED TO EXCEED RADIOACTIVE LEVELS CONSIDERED SAFE TO SURVEY PERSONNEL.
5. VERTICAL ELEVATION BENCHMARK: N1/4 CORNER SECTION 22(10-28) 376.08'

SURVEYOR'S CERTIFICATE

TO PERMAFIX NORTHWEST, INC., THE CITY OF RICHLAND., AND BENTON-FRANKLIN TITLE COMPANY:

THIS IS TO CERTIFY THAT THIS MAP IS MADE IN ACCORDANCE WITH THE "2005 MINIMUM STANDARD DETAIL REQUIREMENTS FOR ALTA/ACSM LAND TITLE SURVEYS," JOINTLY ESTABLISHED AND ADOPTED BY AMERICAN LAND TITLE ASSOCIATION ("ALTA") AND NATIONAL SOCIETY OF PROFESSIONAL SURVEYORS ("NSPS", A MEMBER ORGANIZATION OF THE AMERICAN CONGRESS ON SURVEYING AND MAPPING [ACSM]), AND DOES NOT INCLUDE ITEMS OF TABLE A THEREOF. PURSUANT TO THE ACCURACY STANDARDS AS ADOPTED BY ALTA AND NSPS AND IN EFFECT ON THE DATE OF THIS CERTIFICATION, UNDERSIGNED FURTHER CERTIFIES THAT IN MY PROFESSIONAL OPINION, AS A LAND SURVEYOR REGISTERED IN THE STATE OF WASHINGTON, THE RELATIVE POSITIONAL ACCURACY OF THIS SURVEY DOES NOT EXCEED THAT WHICH IS SPECIFIED THEREIN.

PROFESSIONAL ENGINEERING CERTIFICATION

I certify under penalty of law that this document and all attachments were prepared under my direction or supervision in accordance with a system designed to assure that qualified personnel properly gather and evaluate the information submitted. Based upon my inquiry of the person or persons who manage the system, or those persons directly responsible for gathering the information, the information submitted is, to the best of my knowledge and belief, true, accurate, and complete. I am aware that there are significant penalties for submitting false information, including the possibility of fine and imprisonment for knowing violations.

REV	DATE	DESCRIPTION	REFERENCES
1	01/07/09	PERMIT RENEWAL	
			ALTA/ACSM LAND TITLE SURVEY, WORLEY SURVEYING SERVICE, INC.
0	10/24/08	INITIAL AS-BUILT	6/04/07

PermaFix® Northwest, Inc.

PERMAFIX NORTHWEST RICHLAND, INC.
2025 BATTELLE BLVD.
RICHLAND, WA

(AS-BUILT)

PERMAFIX NORTHWEST SITE TOPOGRAPHY

DRAWN: S.NORTON
ENGR:
QA:

SCALE: NONE | SHT: 2 OF 2

PERMAFIX-DWG-SITE-CIVIL-003 | REV 1

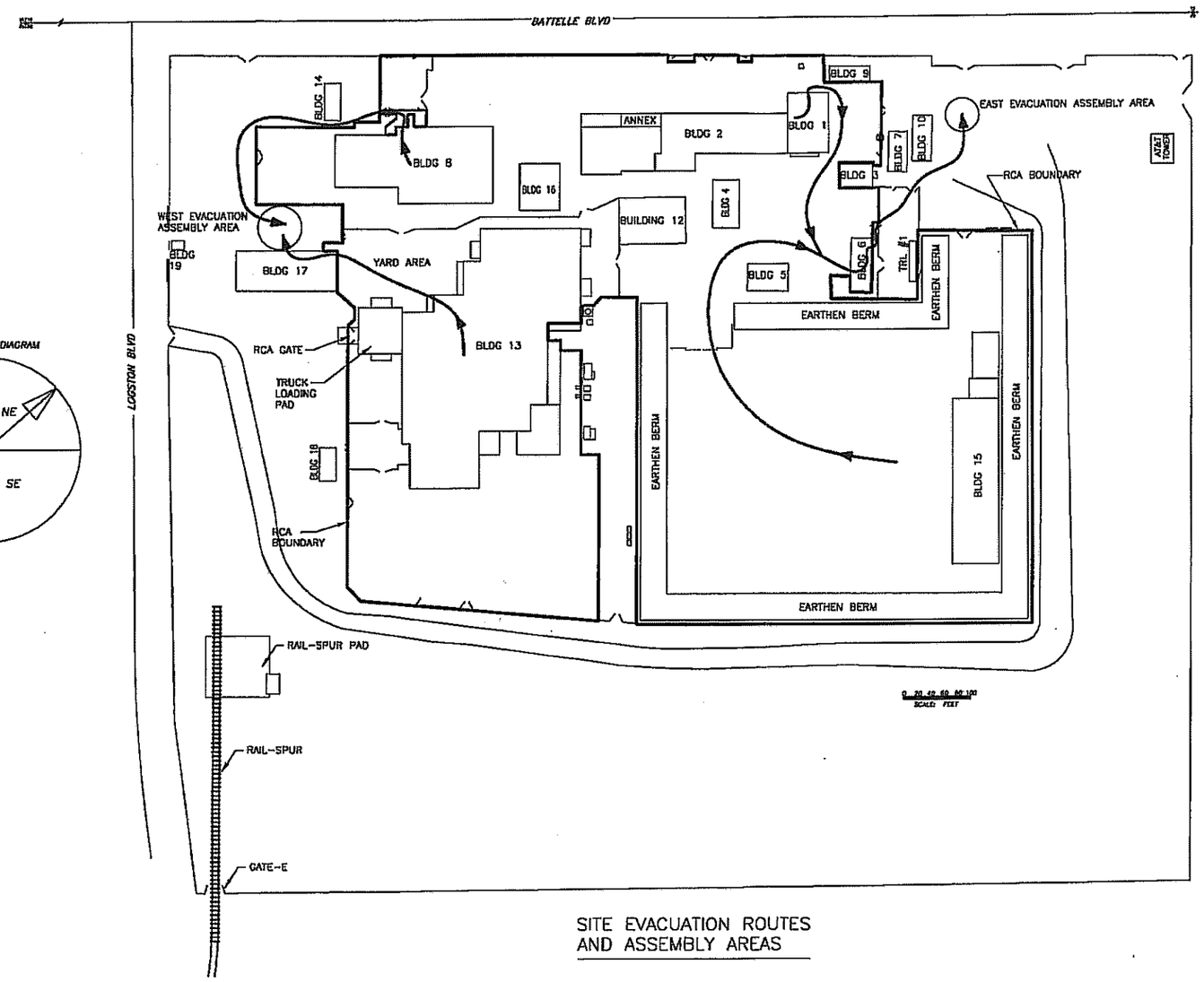

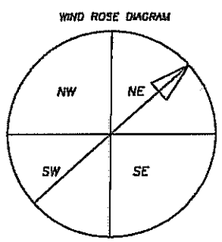

north

BUILDING LEGEND

BLDG 1	LOW LEVEL NON THERMAL	(LLNT)
BLDG 2	LOW LEVEL NON THERMAL	(LLNT)
BLDG 3	WAREHOUSE AND MACHINE SHOP	
BLDG 4	RAD STORAGE	
BLDG 5	MAINTENANCE SHOP	
BLDG 6	CLEAN RELEASE	
BLDG 7	OFFICE	
BLDG 8	LOW LEVEL THERMAL	(LLT)
BLDG 9	OFFICE	
BLDG 10	OFFICE	
BLDG 12	RAD STORAGE	
BLDG 13	MIXED WASTE (MW)	
BLDG 14	OFFICE	
BLDG 15	RAD STORAGE	
BLDG 16	LOW LEVEL THERMAL	(LLTH)
BLDG 17	ADMINISTRATION	
BLDG 18	AIR AND NITROGEN COMPRESSORS	
TRL #1	WHOLE BODY COUNTER	
BLDG 19	GUARD SHACK	
RCA	RADIOLOGICAL CONTROL AREA	
ANNEX	LOW LEVEL NON THERMAL	(LLNT)

SITE EVACUATION ROUTES AND ASSEMBLY AREAS

PROFESSIONAL ENGINEERING CERTIFICATION

I certify under penalty of law that this document and all attachments were prepared under my direction or supervision in accordance with a system designed to assure that qualified personnel properly gather and evaluate the information submitted. Based upon my inquiry of the person or persons who manage the system, or those persons directly responsible for gathering the information, the information submitted is, to the best of my knowledge and belief, true, accurate, and complete. I am aware that there are significant penalties for submitting false information, including the possibility of fine and imprisonment for knowing violations.

REV	DATE	DESCRIPTION	REFERENCES
1	04-11-11	ADDED RAIL-SPUR AND PAD, BLDG. 13 LOADING PAD.	
		REVISED FENCELINE @ BLDG 12 & 17.	
		REMOVED TRLR#2 AND BLDG. 11. ADDED ANNEX.	
0	03/09/09	PERMIT RENEWAL	ALTA/ACSM LAND TITLE SURVEY
			WORLEY SURVEYING SERVICE, INC.
			6/04/07
			60001-C-001 REV 0

PermaFix Northwest Richland, Inc

PERMAFIX NORTHWEST RICHLAND, INC.
2025 BATTELLE BLVD.
RICHLAND, WA

(AS-BUILT)

PERMAFIX NORTHWEST SITE EVACUATION ROUTES AND ASSEMBLY AREAS

DRAWN	S.NORTON
ENGR	
QA	

SCALE: AS SHOWN | SHT: 1 OF 1

PERMAFIX-DWG-SITE-CIVIL-004 | REV 1

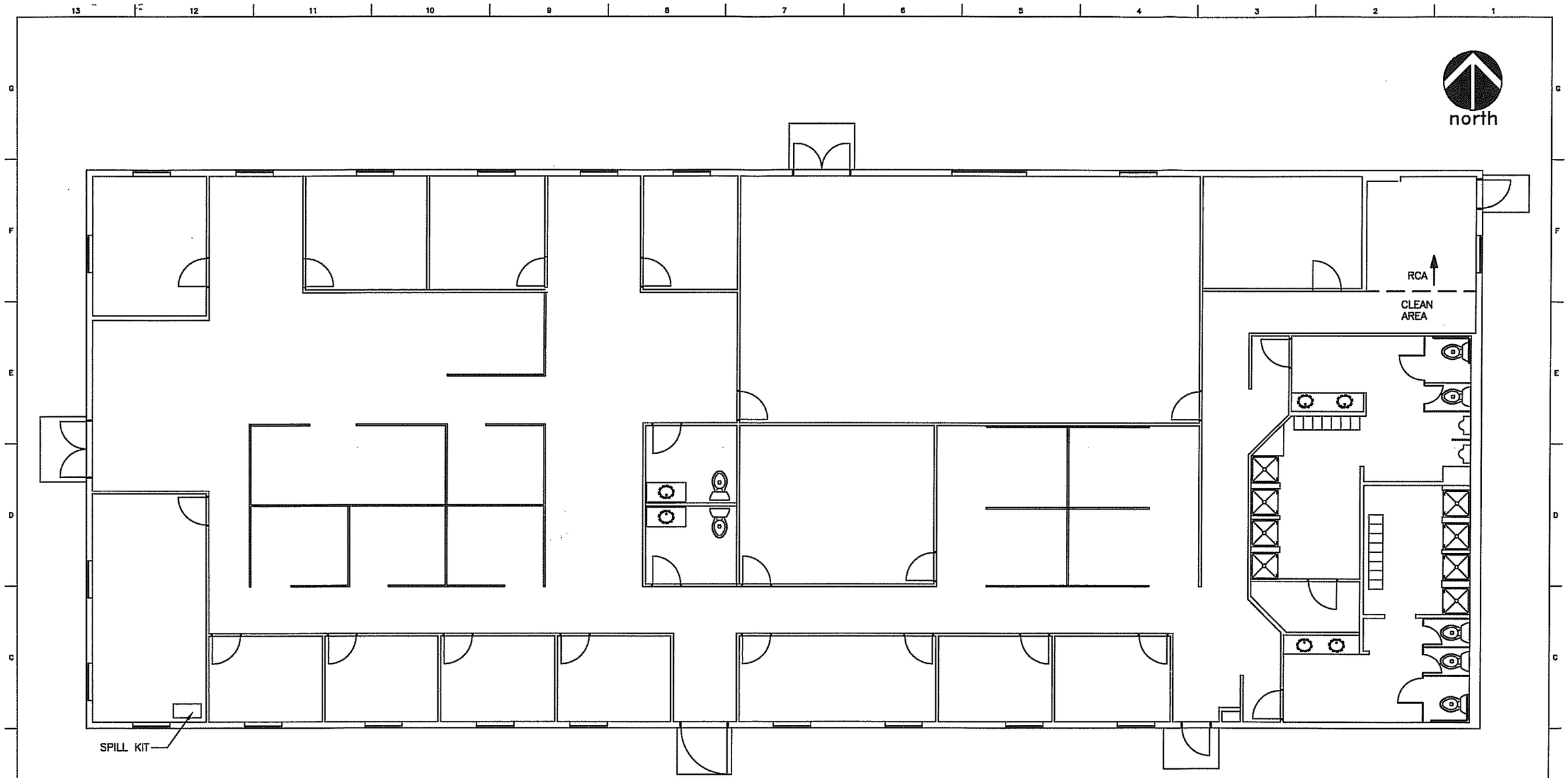

PLAN VIEW
SCALE: 3/32"=1'-0"

PROFESSIONAL ENGINEERING CERTIFICATION
I certify under penalty of law that this document and all attachments were prepared under my direction or supervision in accordance with a system designed to assure that qualified personnel properly gather and evaluate the information submitted. Based upon my inquiry of the person or persons who manage the system, or those persons directly responsible for gathering the information, the information submitted is, to the best of my knowledge and belief, true, accurate, and complete. I am aware that there are significant penalties for submitting false information, including the possibility of fine and imprisonment for knowing violations.

REV	DATE	DESCRIPTION	REFERENCES
1	04/2011	PERMIT RENEWAL	
0	03/10/09	PERMIT RENEWAL	

PermaFix Northwest Richland, Inc

PERMAFIX NORTHWEST RICHLAND, INC.
2025 BATTELLE BLVD.
RICHLAND, WA

(AS-BUILT)

DRAWN: S.NORTON
ENGR:
QA:

BLDG 17

SPILL KIT LOCATION

SCALE: AS SHOWN
SHT: 1 OF 1

PERMAFIX-DWG-SITE-CIVIL-005
REV 1

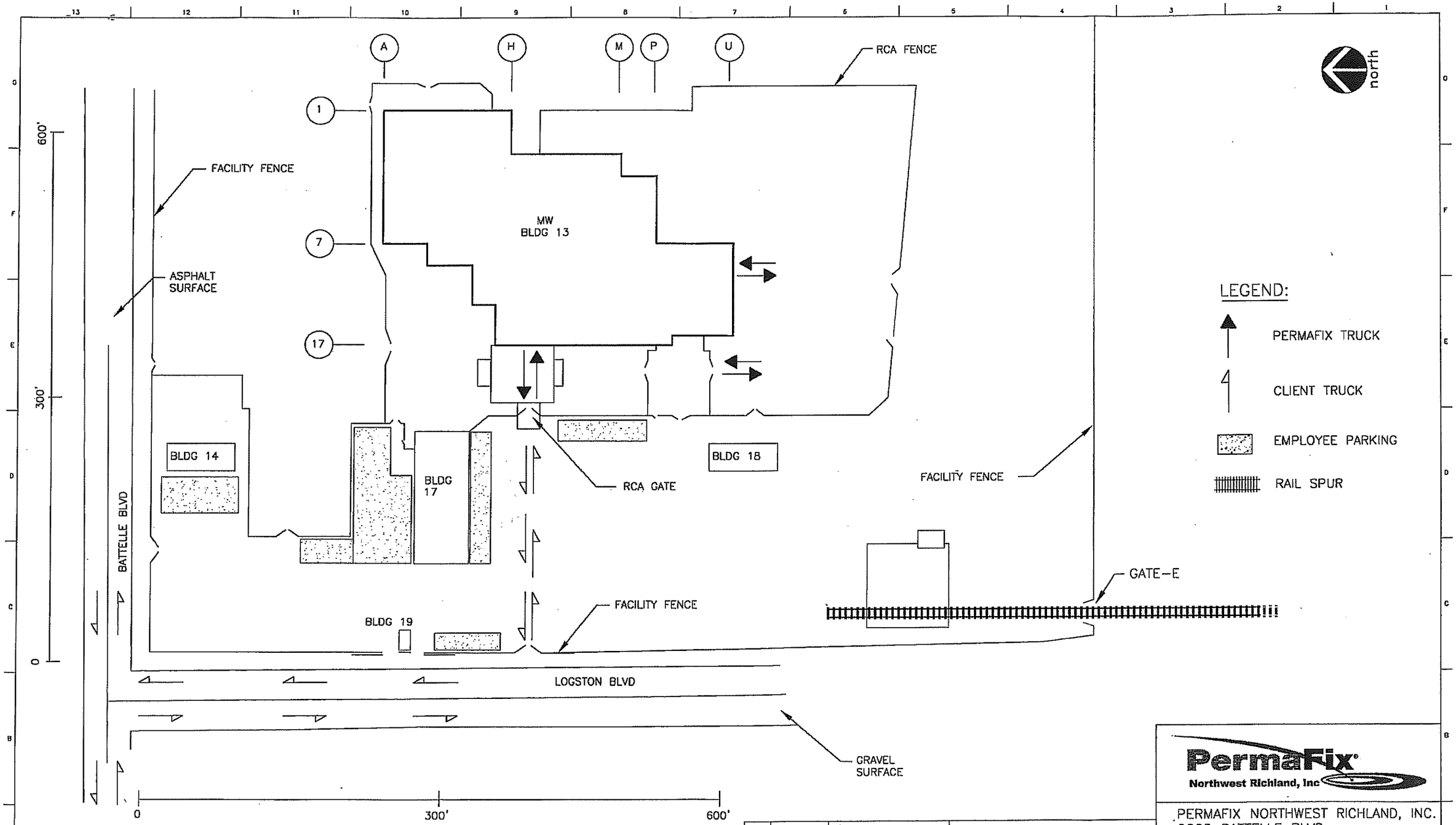

PROFESSIONAL ENGINEERING CERTIFICATION

I certify under penalty of law that this document and all attachments were prepared under my direction or supervision in accordance with a system designed to assure that qualified personnel properly gather and evaluate the information submitted. Based upon my inquiry of the person or persons who manage the system, or those persons directly responsible for gathering the information, the information submitted is, to the best of my knowledge and belief, true, accurate, and complete. I am aware that there are significant penalties for submitting false information, including the possibility of fine and imprisonment for knowing violations.

REV	DATE	DESCRIPTION	REFERENCES
2	04-08-11	REVISED FENCELINE BY BLDG 17. ADDED BLDG.13 LOADING PAD AND RAIL-SPUR AND CONC. PAD	
1	01/07/09	PERMIT RENEWAL	XREF FLOOR DWG
0	10/24/08	INITIAL AS-BUILT	UNDERGROUND DWG

DATE	
DRAWN	S.NORTON
ENGR	
QA	

PermaFix Northwest Richland, Inc

PERMAFIX NORTHWEST RICHLAND, INC.
2025 BATTELLE BLVD.
RICHLAND, WA

BLDG 13
MIXED WASTE FACILITY
TRAFFIC PLAN

SCALE: NONE SHT: 1 OF 1

PERMAFIX-DWG-MW-CIVIL-001 REV 2

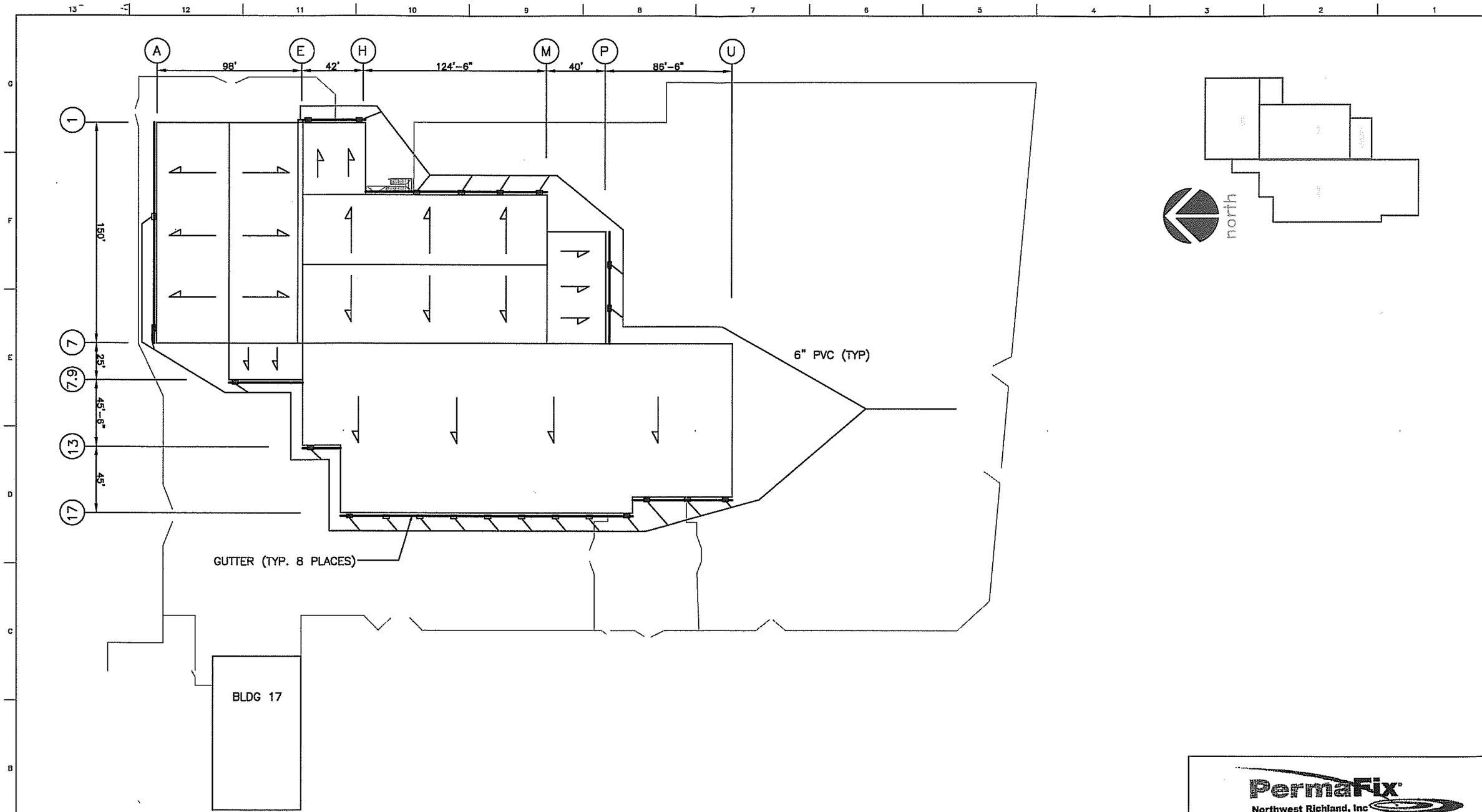

PROFESSIONAL ENGINEERING CERTIFICATION

I certify under penalty of law that this document and all attachments were prepared under my direction or supervision in accordance with a system designed to assure that qualified personnel properly gather and evaluate the information submitted. Based upon my inquiry of the person or persons who manage the system, or those persons directly responsible for gathering the information, the information submitted is, to the best of my knowledge and belief, true, accurate, and complete. I am aware that there are significant penalties for submitting false information, including the possibility of fine and imprisonment for knowing violations.

REV	DATE	DESCRIPTION	REFERENCES
1	01/07/09	PERMIT RENEWAL	
0	11/12/08	INITIAL AS-BUILT	UNDERGROUND DWG

PermaFix Northwest Richland, Inc

PERMAFIX NORTHWEST RICHLAND, INC.
2025 BATTELLE BLVD.
RICHLAND, WA

(AS-BUILT)

BLDG 13
MIXED WASTE FACILITY
ROOF DRAINAGE

DRAWN: S.NORTON
ENGR:
QA:

SCALE: NONE | SHT: 1 OF 1

PERMAFIX-DWG-MW-CIVIL-002 | REV 1

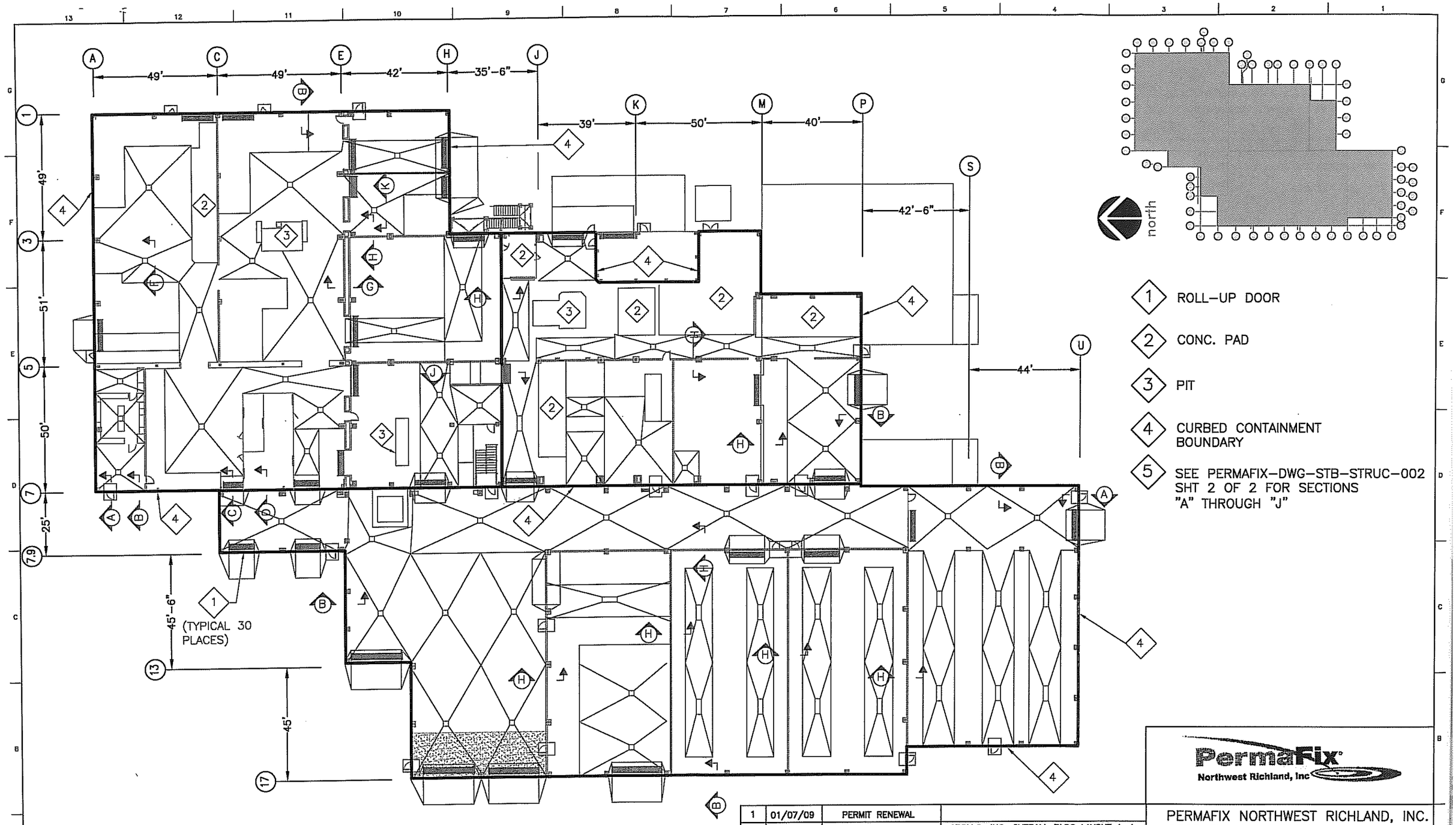

PROFESSIONAL ENGINEERING CERTIFICATION
I certify under penalty of law that this document and all attachments were prepared under my direction or supervision in accordance with a system designed to assure that qualified personnel properly gather and evaluate the information submitted. Based upon my inquiry of the person or persons who manage the system, or those persons directly responsible for gathering the information, the information submitted is, to the best of my knowledge and belief, true, accurate, and complete. I am aware that there are significant penalties for submitting false information, including the possibility of fine and imprisonment for knowing violations.

REV	DATE	DESCRIPTION	REFERENCES
1	01/07/09	PERMIT RENEWAL	
			APOLLO, INC. OVERALL BLDG LAYOUT A-4
			31001-S-002-S503
			31001-S-002-S502
			31001-S-002-S501
			31001-S-002-S310
			31001-S-002-S303
			31001-S-002-S302
0	10/24/08	INITIAL AS-BUILT	31001-MW-MECH-FLOOR

PermaFix Northwest Richland, Inc

PERMAFIX NORTHWEST RICHLAND, INC.
2025 BATTELLE BLVD.
RICHLAND, WA

(AS-BUILT)

BLDG 13
SECONDARY CONTAINMENT
FLOOR SLOPES AND CURBS

DRAWN S.NORTON
ENGR
QA

SCALE: NONE SHT: 1 OF 2

PERMAFIX-DWG-MW-STRUC-001 REV 1

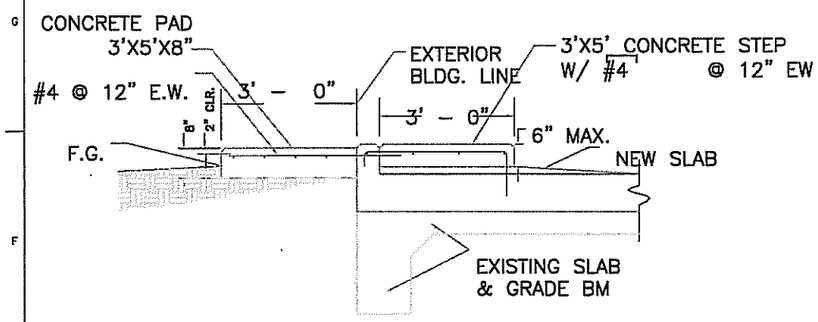

SECTION A SHT 1

TYPICAL SECTION FOR ALL DOOR OPENING IN EXISTING BLDGS

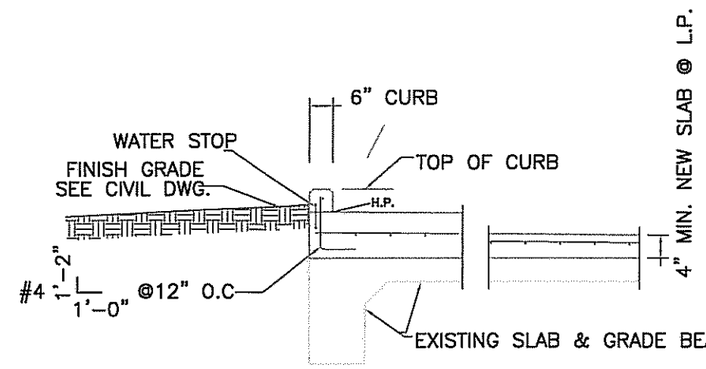

SECTION B SHT 1

(SECTION @ EXISTING EXTERIOR WALL)

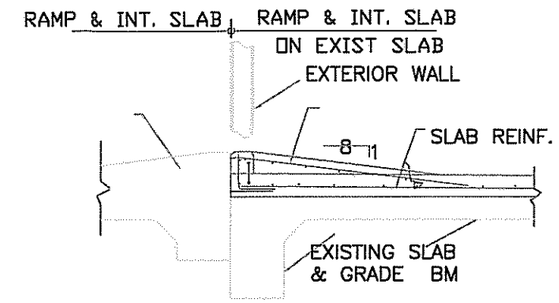

SECTION C SHT 1

TYPICAL RAMP SECTION
@ EXTERIOR DOOR OPENING

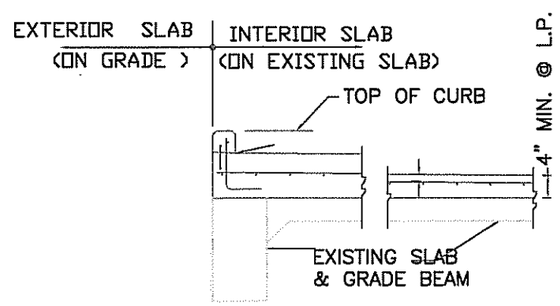

SECTION D SHT 1

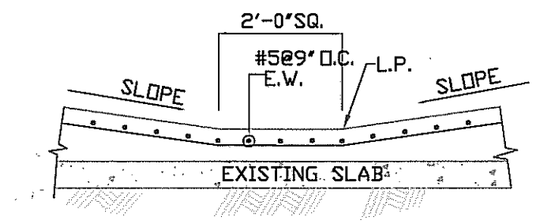

SECTION F SHT 1

TYPICAL FOR ALL LOW POINT
OF SECONDARY CONTAINMENT

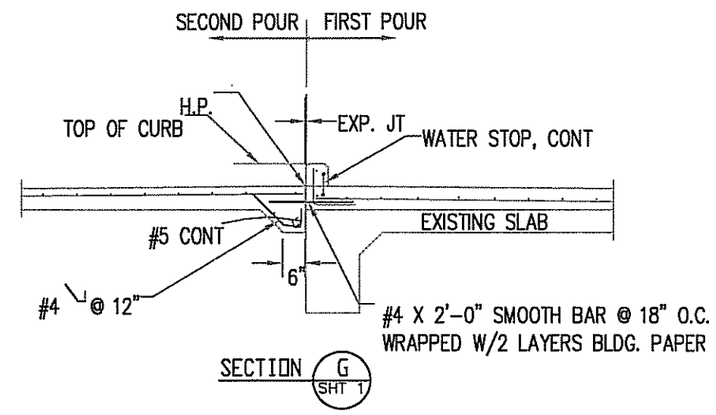

SECTION G SHT 1

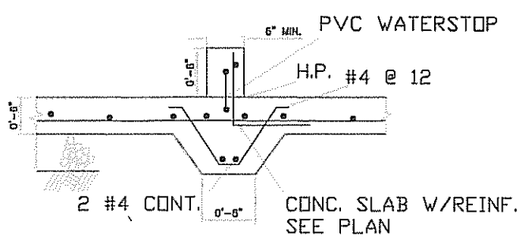

SECTION H SHT 1

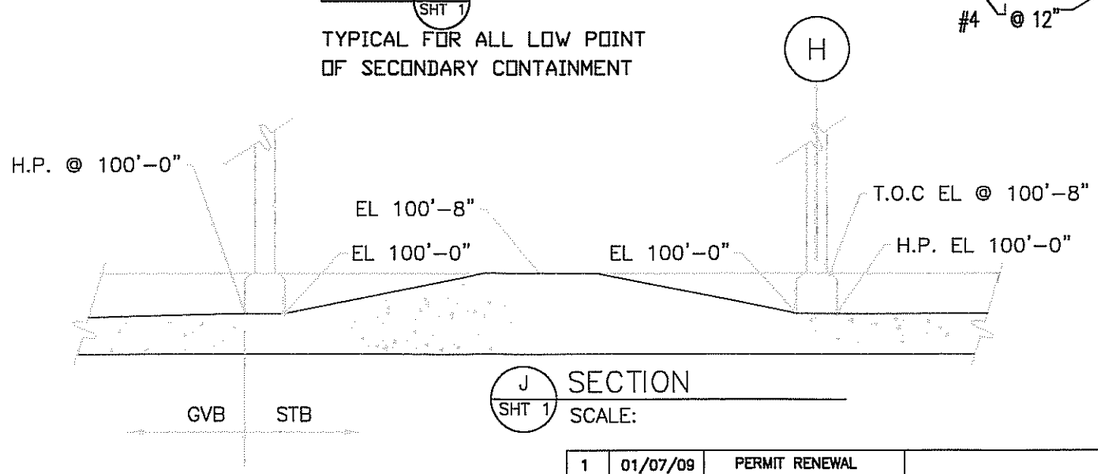

J SHT 1 SECTION

SCALE:

PROFESSIONAL ENGINEERING CERTIFICATION

I certify under penalty of law that this document and all attachments were prepared under my direction or supervision in accordance with a system designed to assure that qualified personnel properly gather and evaluate the information submitted. Based upon my inquiry of the person or persons who manage the system, or those persons directly responsible for gathering the information, the information submitted is, to the best of my knowledge and belief, true, accurate, and complete. I am aware that there are significant penalties for submitting false information, including the possibility of fine and imprisonment for knowing violations.

REV	DATE	DESCRIPTION	REFERENCES
1	01/07/09	PERMIT RENEWAL	
			APOLLO, INC. OVERALL BLDG LAYOUT A-4
			31001-S-002-S503
			31001-S-002-S502
			31001-S-002-S501
			31001-S-002-S310
			31001-S-002-S303
			31001-S-002-S302
0	10/24/08	INITIAL AS-BUILT	31001-MW-MECH-FLOOR

PermaFix Northwest Richland, Inc

PERMAFIX NORTHWEST RICHLAND, INC.
2025 BATTELLE BLVD.
RICHLAND, WA

(AS-BUILT)

BLDG 13
SECONDARY CONTAINMENT
FLOOR SLOPES AND CURBS

DRAWN S.NORTON
ENGR
QA

SCALE: NONE SHT: 2 OF 2

PERMAFIX-DWG-MW-STRUC-001 REV 1

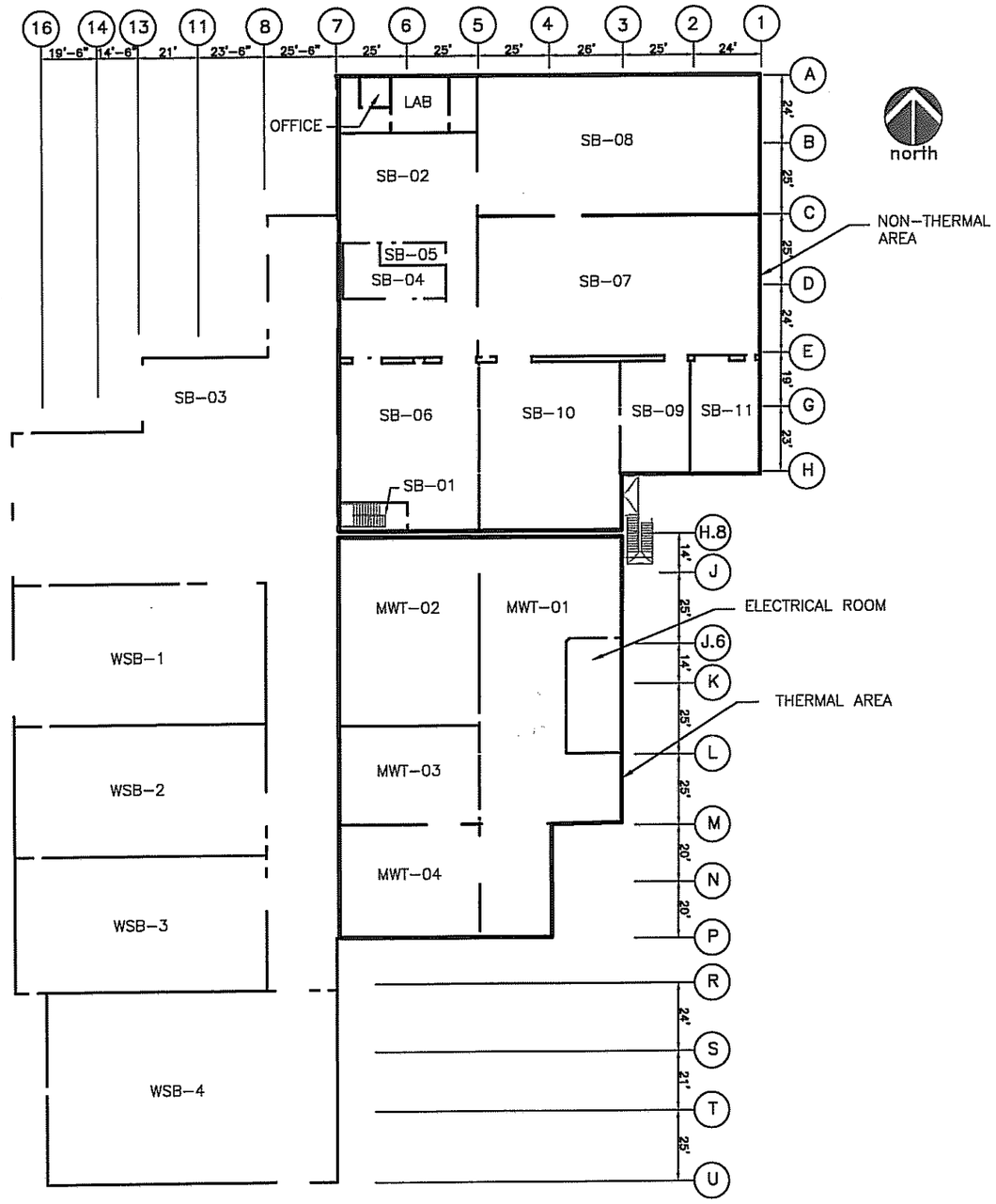

ROOM LEGEND

ROOM	DESCRIPTION
SB-01	STAIRWELL/CONTROL ROOM ACCESS
SB-02	WASTE STORAGE
SB-03	WASTE STORAGE/WASTE TREATMENT
SB-04	WASTE STORAGE
SB-05	WASTE STORAGE/WASTE TREATMENT
SB-06	WASTE STORAGE/WASTE TREATMENT
SB-07	WASTE STORAGE/WASTE TREATMENT
SB-08	WASTE STORAGE/WASTE TREATMENT
SB-09	WASTE STORAGE/WASTE TREATMENT
SB-10	NON-THERMAL AREA VENTILATION
SB-11	WASTE STORAGE/WASTE TREATMENT
MWT-01	WASTE STORAGE/WASTE TREATMENT
MWT-02	WASTE STORAGE/WASTE TREATMENT
MWT-03	THERMAL AREA VENTILATION
MWT-04	WASTE STORAGE/WASTE TREATMENT
WSB-1	WASTE STORAGE
WSB-2	WASTE STORAGE
WSB-3	WASTE STORAGE
WSB-4	WASTE STORAGE
LAB	LABORATORY
OFFICE	OFFICE

PROFESSIONAL ENGINEERING CERTIFICATION

I certify under penalty of law that this document and all attachments were prepared under my direction or supervision in accordance with a system designed to assure that qualified personnel properly gather and evaluate the information submitted. Based upon my inquiry of the person or persons who manage the system, or those persons directly responsible for gathering the information, the information submitted is, to the best of my knowledge and belief, true, accurate, and complete. I am aware that there are significant penalties for submitting false information, including the possibility of fine and imprisonment for knowing violations.

REV	DATE	DESCRIPTION	REFERENCES
1	01/07/09	PERMIT RENEWAL	
0	10/24/08	INITIAL AS-BUILT	31001MW-MECH-100-0

DRAWN	S.NORTON
ENGR	
QA	

PermaFix Northwest Richland, Inc

PERMAFIX NORTHWEST RICHLAND, INC.
2025 BATTELLE BLVD.
RICHLAND, WA

(AS-BUILT)

MIXED WASTE FACILITY
ROOM GENERAL ARRANGEMENT
BLDG 13

SCALE: NONE | SHT: 1 OF 1

PERMAFIX-DWG-MW-GA-001 | REV 1

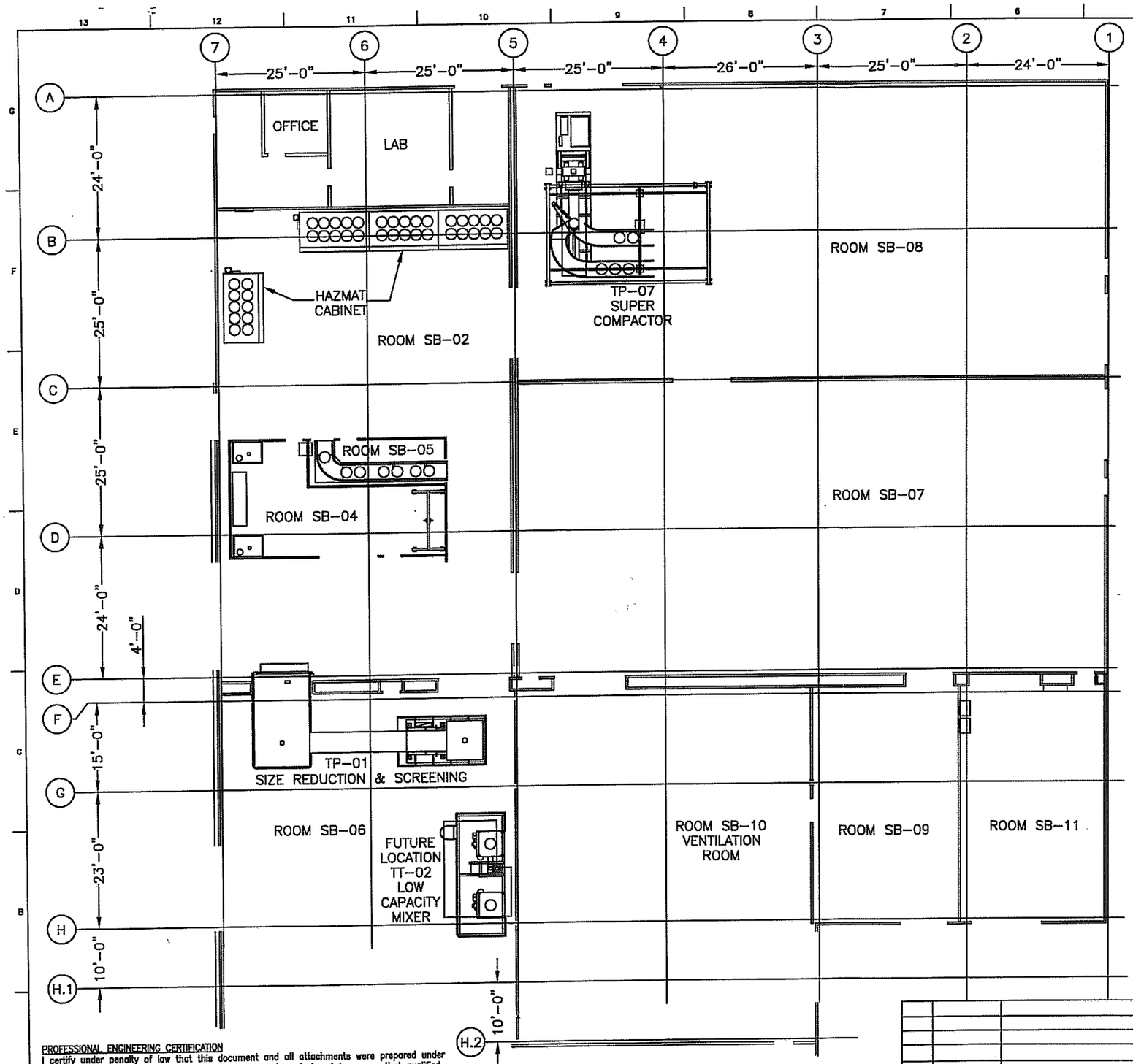

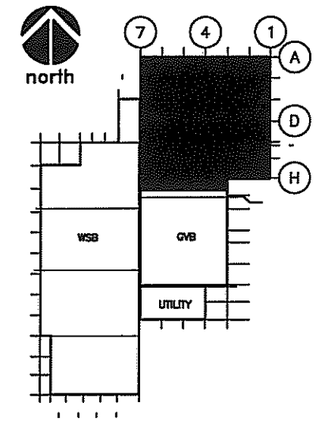

PROFESSIONAL ENGINEERING CERTIFICATION
I certify under penalty of law that this document and all attachments were prepared under my direction or supervision in accordance with a system designed to assure that qualified personnel properly gather and evaluate the information submitted. Based upon my inquiry of the person or persons who manage the system, or those persons directly responsible for gathering the information, the information submitted is, to the best of my knowledge and belief, true, accurate, and complete. I am aware that there are significant penalties for submitting false information, including the possibility of fine and imprisonment for knowing violations.

REV	DATE	DESCRIPTION	REFERENCES
1	01/06/09	PERMIT RENEWAL	31001-M-100 3B
0	10/24/08	INITIAL AS-BUILT	31001-M-100 3A

PermaFix Northwest Richland, Inc

PERMAFIX NORTHWEST RICHLAND, INC.
2025 BATTELLE BLVD.
RICHLAND, WA

(AS-BUILT)

NON-THERMAL AREA
FACILITY EQUIPMENT
GENERAL ARRANGEMENT

DRAWN: S.NORTON
ENGR:
QA:

SCALE: NONE SHT: 1 OF 1
PERMAFIX-DWG-STB-GA-FAC-001A REV 1

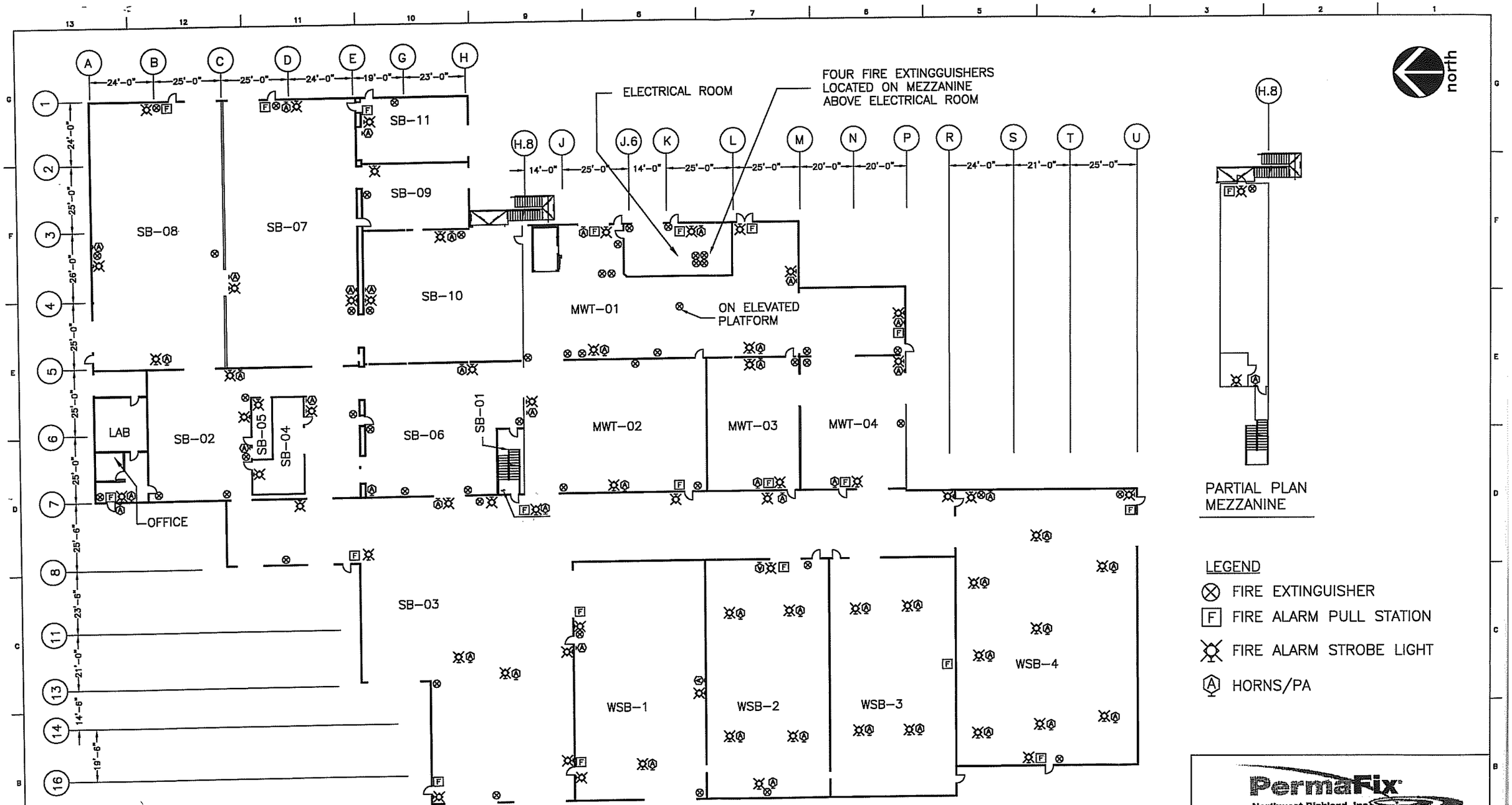

PROFESSIONAL ENGINEERING CERTIFICATION

I certify under penalty of law that this document and all attachments were prepared under my direction or supervision in accordance with a system designed to assure that qualified personnel properly gather and evaluate the information submitted. Based upon my inquiry of the person or persons who manage the system, or those persons directly responsible for gathering the information, the information submitted is, to the best of my knowledge and belief, true, accurate, and complete. I am aware that there are significant penalties for submitting false information, including the possibility of fine and imprisonment for knowing violations.

REV	DATE	DESCRIPTION	REFERENCES
0	01/26/09	PERMIT RENEWAL	SK-GS-03 SHT 1 OF 2 REV. 0
			31001MW-MECH-100-0

PermaFix Northwest Richland, Inc

PERMAFIX NORTHWEST RICHLAND, INC.
2025 BATTELLE BLVD.
RICHLAND, WA

(AS-BUILT)

MIXED WASTE FACILITY
ANNUNCIATION EQUIPMENT
BLDG 13

DRAWN: S.NORTON
ENGR:
QA:

SCALE: NONE | SHT: 1 OF 1

PERMAFIX-DWG-MW-GA-003 | REV 0

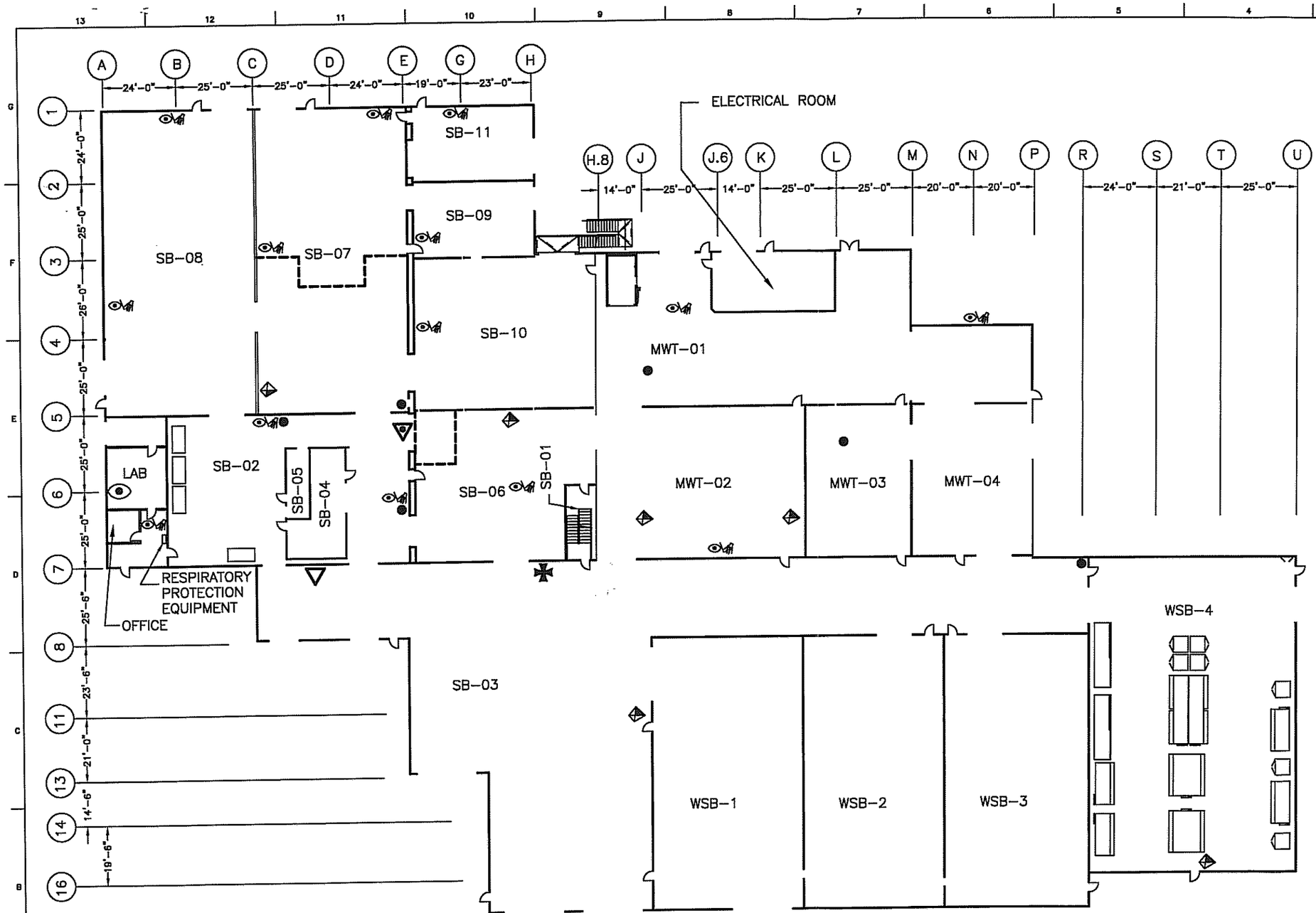

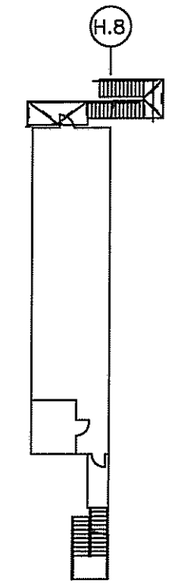

PARTIAL PLAN
MEZZANINE

LEGEND

- SPILL CONTROL KIT
- FIRST AID KIT
- DECON SOLUTION
- DECON TOWELS IN CABINET
- EYE WASH STATION
- EYE WASH STATION/SAFETY SHOWER
- FLOORDRY CONTAINER (EMERG. USE ONLY)
- CONTAMINATED AREA BOUNDARY
- HAZMAT STORAGE CABINETS

PROFESSIONAL ENGINEERING CERTIFICATION

I certify under penalty of law that this document and all attachments were prepared under my direction or supervision in accordance with a system designed to assure that qualified personnel properly gather and evaluate the information submitted. Based upon my inquiry of the person or persons who manage the system, or those persons directly responsible for gathering the information, the information submitted is, to the best of my knowledge and belief, true, accurate, and complete. I am aware that there are significant penalties for submitting false information, including the possibility of fine and imprisonment for knowing violations.

REV	DATE	DESCRIPTION	REFERENCES
0	01/26/09	PERMIT RENEWAL	SK-GS-04 REV. 0 31001MW-MECH-100-0

PermaFix Northwest Richland, Inc

PERMAFIX NORTHWEST RICHLAND, INC.
2025 BATTELLE BLVD.
RICHLAND, WA

(AS-BUILT)

MIXED WASTE FACILITY
EMERGENCY RESPONSE
BLDG 13

DRAWN	S.NORTON
ENGR	
QA	

SCALE: NONE | SHT: 1 OF 1

PERMAFIX-DWG-MW-GA-004 | REV 0

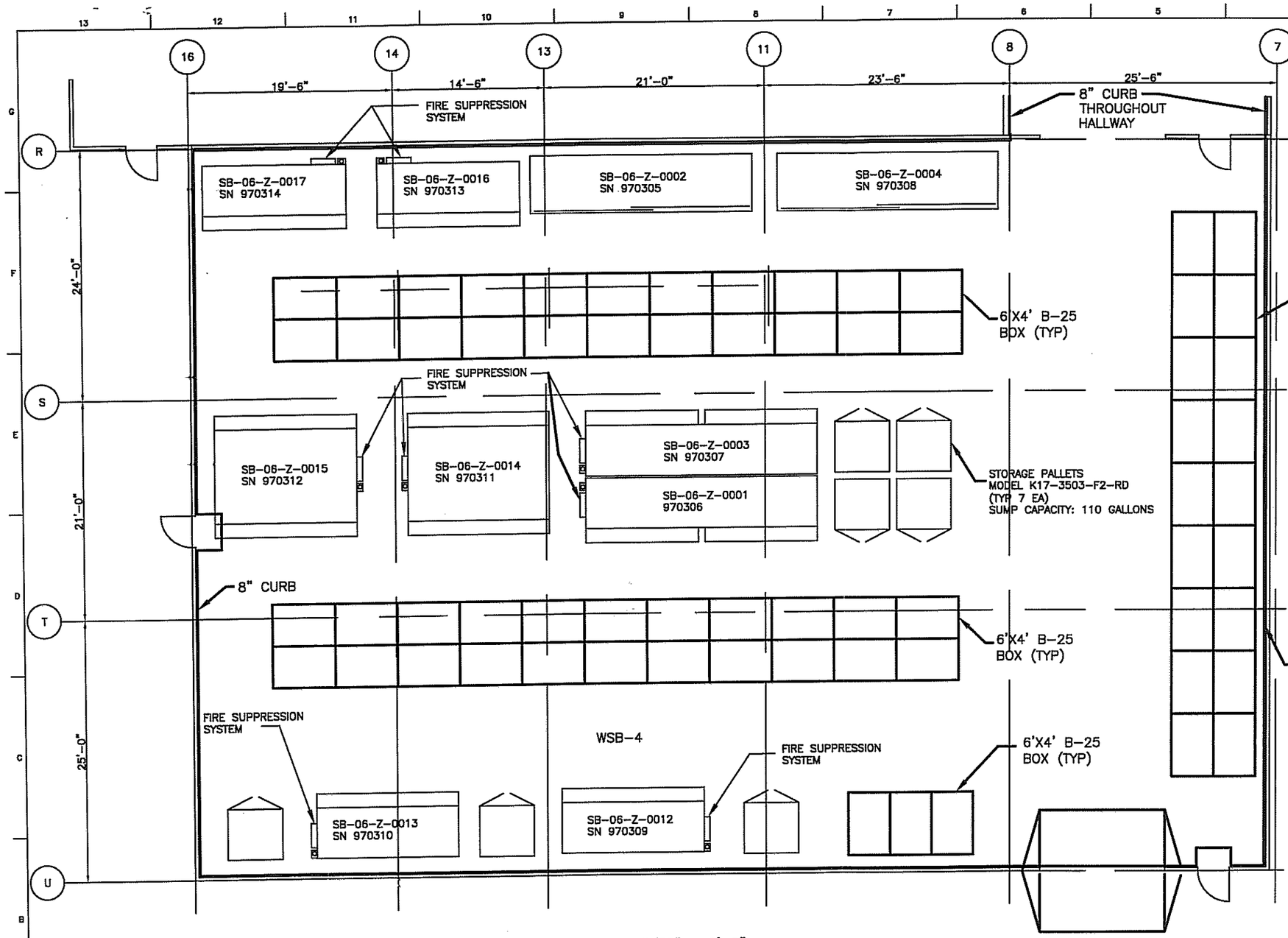

SCALE: 3/32" = 1'-0"

TYPICAL CONTAINER LAYOUT

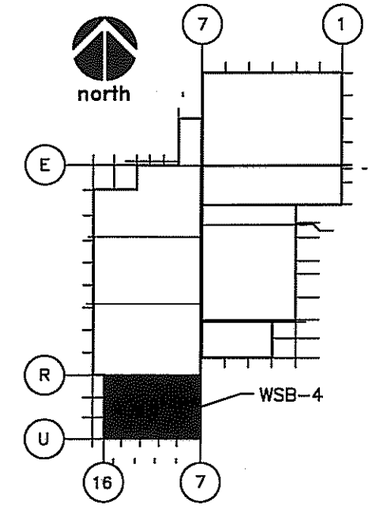

NOTES:

1) MODEL L16-3145-F2-RD-MOD: SN SB-06-Z-0002, SN SB-06-Z-0004
DIMENSIONS: 21'-2" X 5'-6" X 12'-0" TALL. MANUALLY OPERATED SLIDING DOORS. SUMP CAPACITY: 332 GALLONS.

2) BASE MODEL L16-3145-MOD-DC-RD-F2-GM: SN SB-06-Z-0001, SN SB-06-Z-0003
DIMENSIONS: 22"-3" X 4'-10"" X 11'-6" TALL. TWO EA. 1 1/2 HR FIRE RATED ROLL-UP DOORS ON ONE SIDE. SUMP CAPACITY: 332 GALLONS.

3) MODEL L36-3105-MOD-DC-RD-F2-GM: SN SB-06-Z-0012, SN SB-06-Z-0013
DIMENSIONS: 13'-8" X 4'-10 X 12'-0" TALL. 1 1/2 HOUR FIRE RATED ROLL-UP DOOR. SUMP CAPACITY: 390 GALLONS.

4) MODEL L39-3125-MOD-DC-RD-F2-GM: SN SB-06-Z-0014, SN SB-06-Z-0015
DIMENSIONS: 13'-8" X 9'-0" X 12'-0" TALL. 1 1/2 HOUR FIRE RATED ROLL-UP DOOR ON EACH LONG SIDE. SUMP CAPACITY: SUMP IS MODIFIED TO HOLD 725 GALLONS.

5) MODEL L36-3105-MOD-DC-RD-F2-GM: SN SB-06-Z-0016, SN SB-06-Z-0017
DIMENSIONS: 13'-8" X 9'-0" X 12'-0" TALL. 1 1/2 HOUR FIRE RATED ROLL-UP DOOR. SUMP CAPACITY: 725 GALLONS.

6) BASE MODEL K17-3503-F2-RD: ENCLOSED PALLET,
DIMENSIONS: 5'-0" X 4'-8" X 7'-5" TALL. 1 1/2 HOUR FIRE RATED HINGED DOORS ON ONE SIDE.

7) SEE SHEET 2 OF 2 FOR CONTAINER DRAWINGS.

8) CABINETS MAY BE REPLACED WITH EQUIVALENT AS NECESSARY.

PROFESSIONAL ENGINEERING CERTIFICATION
I certify under penalty of law that this document and all attachments were prepared under my direction or supervision in accordance with a system designed to assure that qualified personnel properly gather and evaluate the information submitted. Based upon my inquiry of the person or persons who manage the system, or those persons directly responsible for gathering the information, the information submitted is, to the best of my knowledge and belief, true, accurate, and complete. I am aware that there are significant penalties for submitting false information, including the possibility of fine and imprisonment for knowing violations.

REV	DATE	DESCRIPTION	REFERENCES
			PERMAFIX-DWG-MW-GA-001 REV 1
0	01/22/09	PERMIT RENEWAL	31001-EA-201 REV 0

PermaFix® Northwest Richland, Inc

PERMAFIX NORTHWEST RICHLAND, INC.
2025 BATTELLE BLVD.
RICHLAND, WA

(AS-BUILT)

ROOM WSB-4
HAZMAT CONTAINERS
TYPICAL WASTE STORAGE, BLDG 13

DRAWN	S.NORTON	
ENGR		SCALE: AS SHOWN — SHT: 1 OF 2
QA		PERMAFIX-DWG-MW-GA-007 — REV 0

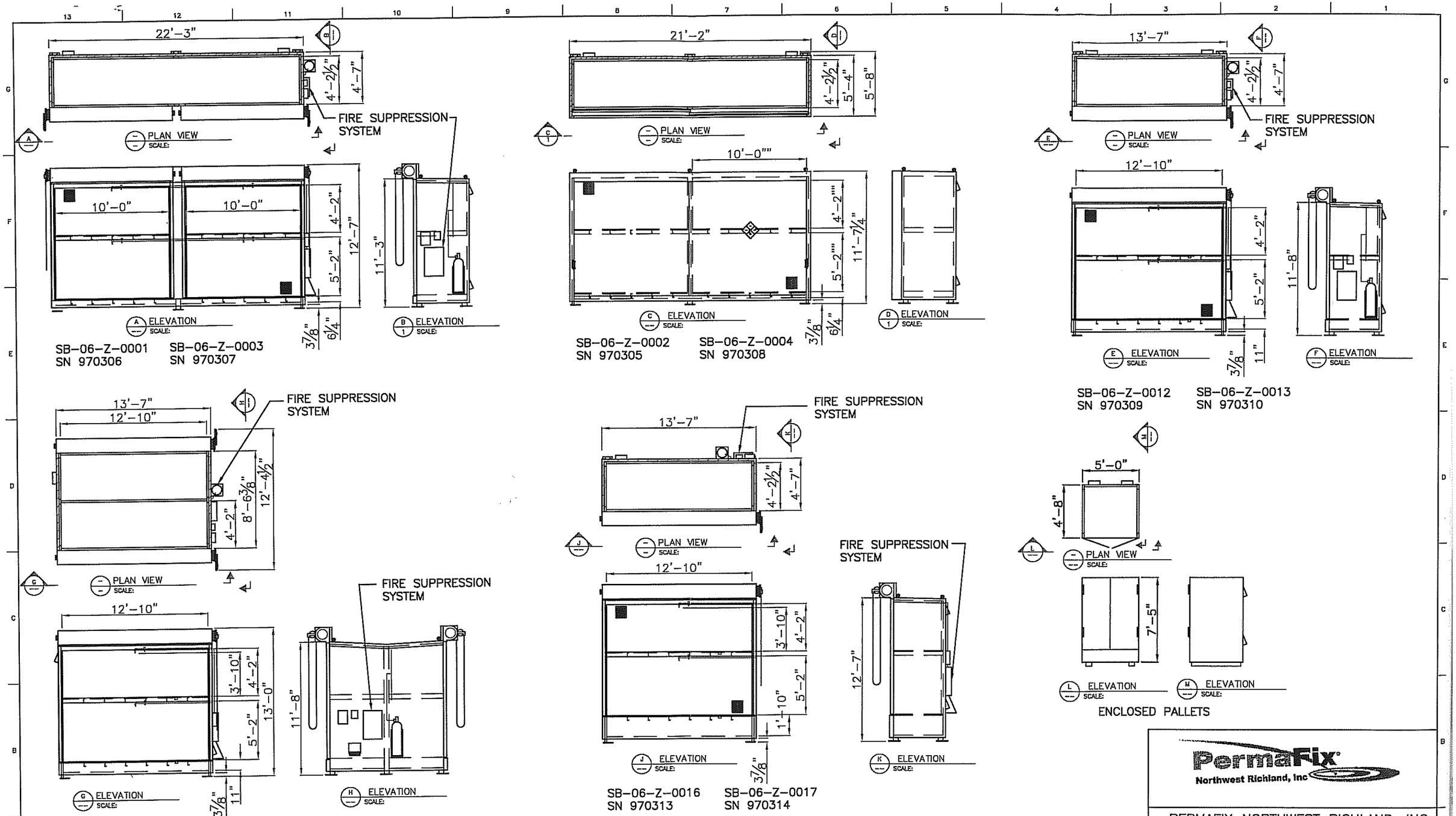

SCALE: 1/8"=1'-0"

PROFESSIONAL ENGINEERING CERTIFICATION

I certify under penalty of law that this document and all attachments were prepared under my direction or supervision in accordance with a system designed to assure that qualified personnel properly gather and evaluate the information submitted. Based upon my inquiry of the person or persons who manage the system, or those persons directly responsible for gathering the information, the information submitted is, to the best of my knowledge and belief, true, accurate, and complete. I am aware that there are significant penalties for submitting false information, including the possibility of fine and imprisonment for knowing violations.

REV	DATE	DESCRIPTION	REFERENCES
			P & D DWG. WS06-Z-016 REV. 1
			P & D DWG. WS06-Z-014 REV. 0
			P & D DWG. WS06-Z-012 REV. 1
			P & D DWG. WS06-Z-002 REV. 1
			P & D DWG. WS06-Z-001 REV. 1
0	01/22/09	PERMIT RENEWAL	PERMAFIX-DWG-MW-GA-001 REV 1

PermaFix Northwest Richland, Inc

PERMAFIX NORTHWEST RICHLAND, INC.
2025 BATTELLE BLVD.
RICHLAND, WA

(AS-BUILT)

ROOM WSB-4
HAZMAT CONTAINERS
TYPICAL, WASTE STORAGE, BLDG 13

DRAWN: S.NORTON
ENGR:
QA:

SCALE: AS SHOWN | SHT: 2 OF 2

PERMAFIX-DWG-MW-GA-007 | REV 0

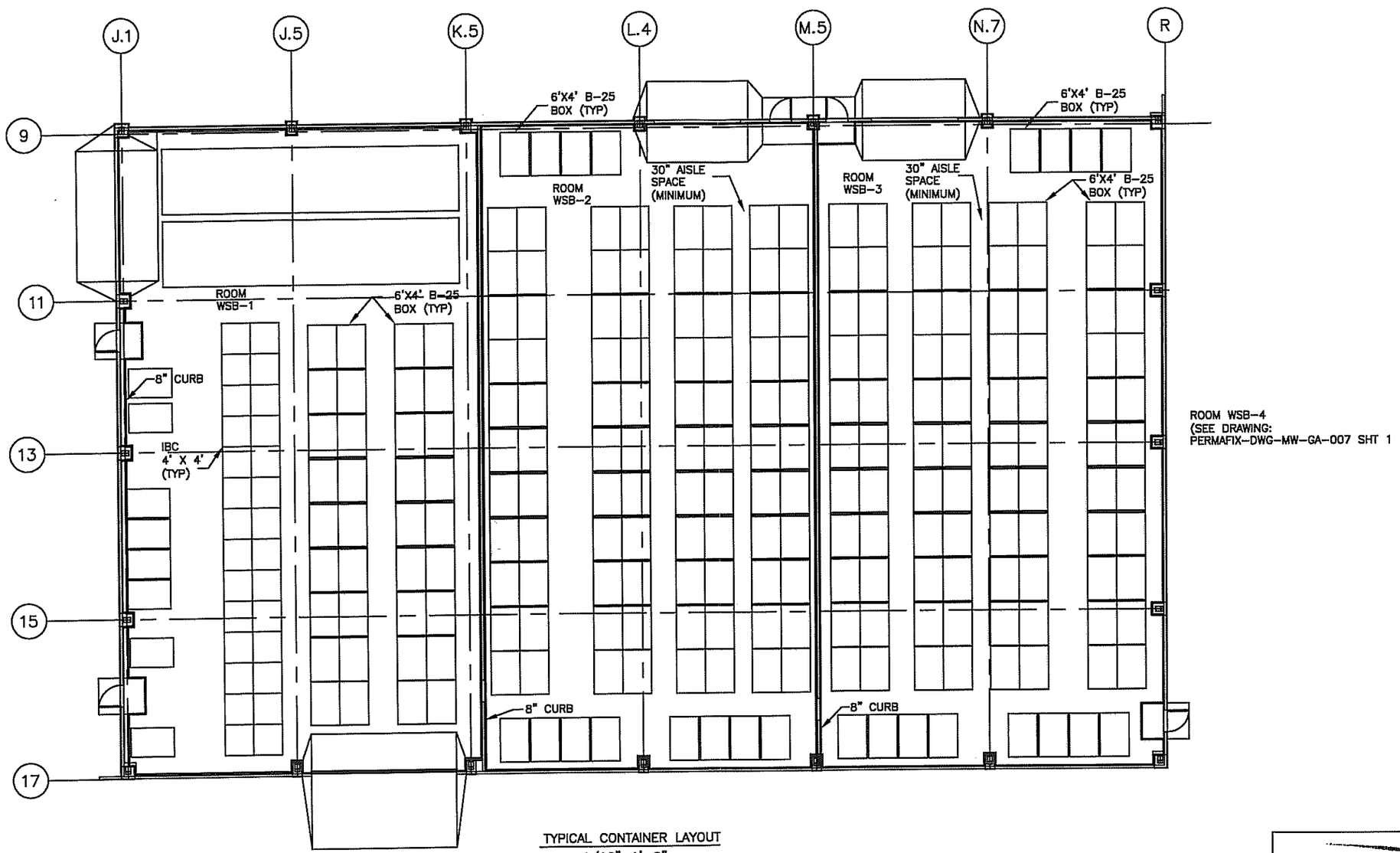

TYPICAL CONTAINER LAYOUT
1/16"=1'-0"

PROFESSIONAL ENGINEERING CERTIFICATION
I certify under penalty of law that this document and all attachments were prepared under my direction or supervision in accordance with a system designed to assure that qualified personnel properly gather and evaluate the information submitted. Based upon my inquiry of the person or persons who manage the system, or those persons directly responsible for gathering the information, the information submitted is, to the best of my knowledge and belief, true, accurate, and complete. I am aware that there are significant penalties for submitting false information, including the possibility of fine and imprisonment for knowing violations.

REV	DATE	DESCRIPTION	REFERENCES
0	02/25/09	PERMIT RENEWAL	DRWG 31001-M-100 SHT M005

PermaFix Northwest Richland, Inc

PERMAFIX NORTHWEST RICHLAND, INC.
2025 BATTELLE BLVD.
RICHLAND, WA

(AS-BUILT)

MIXED WASTE FACILITY
TYPICAL LAYOUT OF ROOMS
WSB-1,WSB-2,WSB-3

DRAWN	S.NORTON
ENGR	
QA	

SCALE: AS SHOWN | SHT: 1 OF 1

PERMAFIX-DWG-MW-GA-008 | REV 0

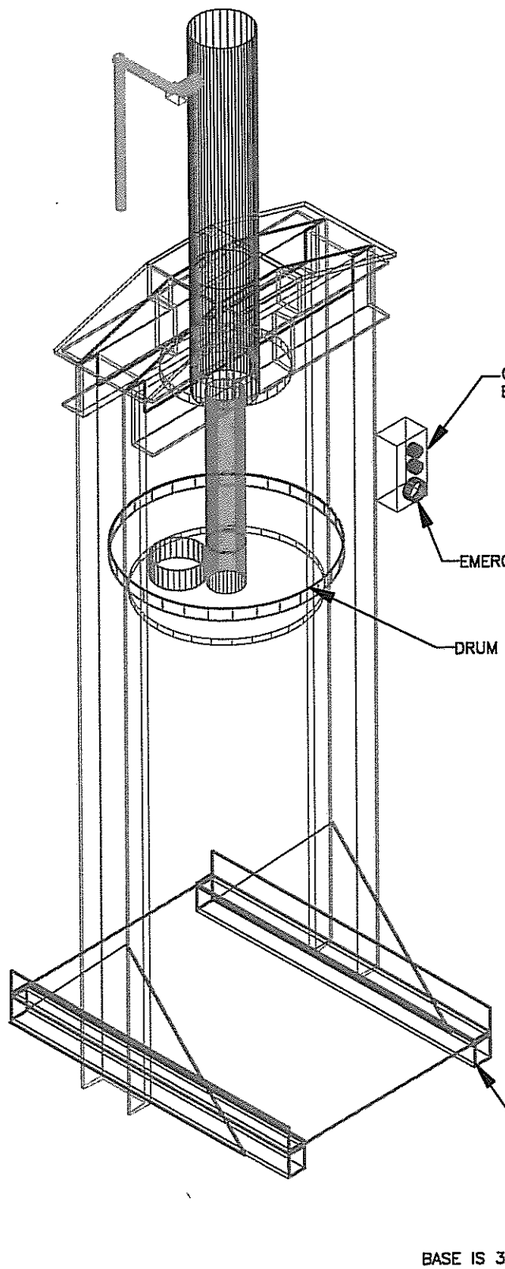

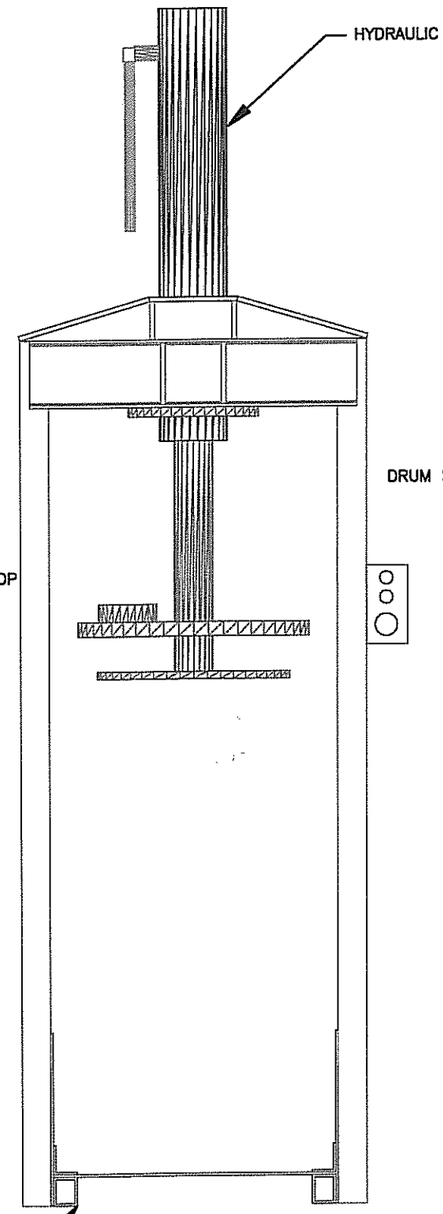

FRONT VIEW

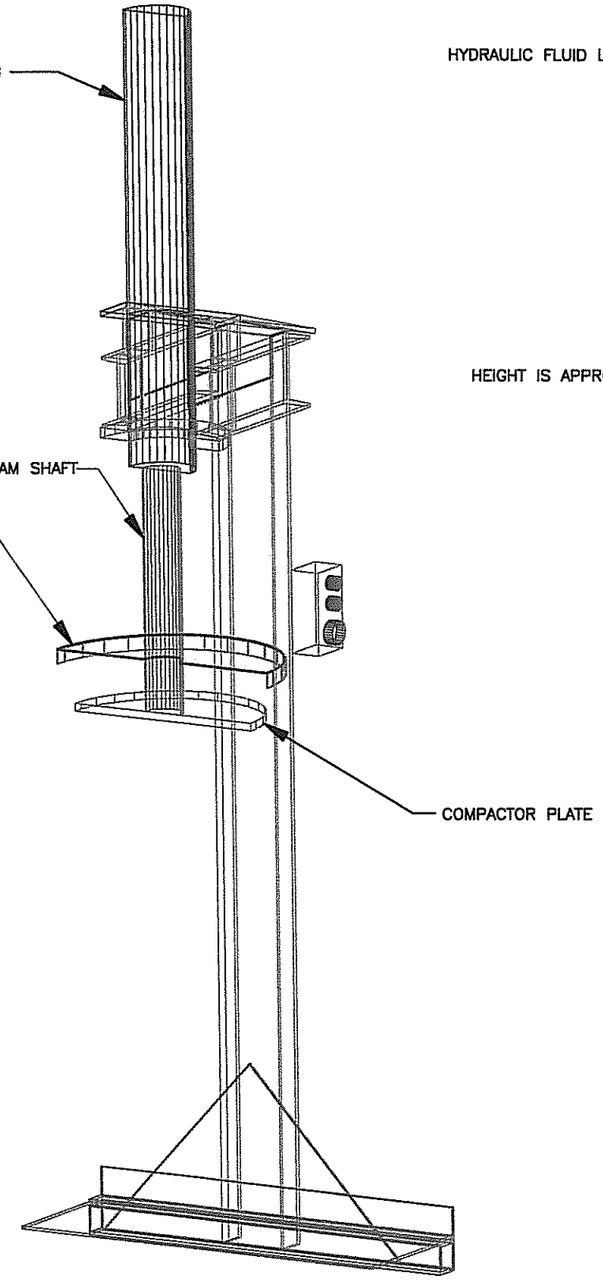

SECTIONED VIEW

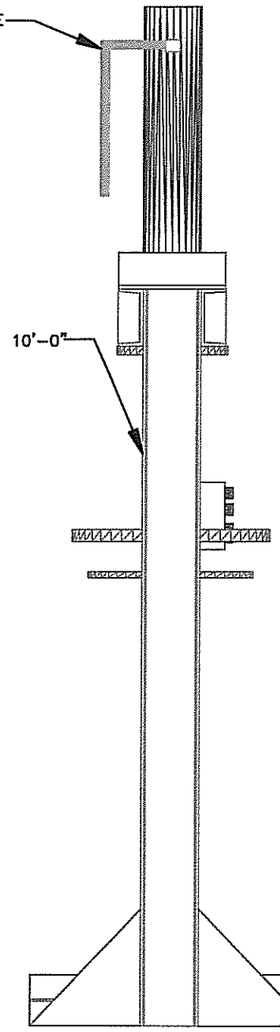

SIDE VIEW

PROFESSIONAL ENGINEERING CERTIFICATION

I certify under penalty of law that this document and all attachments were prepared under my direction or supervision in accordance with a system designed to assure that qualified personnel properly gather and evaluate the information submitted. Based upon my inquiry of the person or persons who manage the system, or those persons directly responsible for gathering the information, the information submitted is, to the best of my knowledge and belief, true, accurate, and complete. I am aware that there are significant penalties for submitting false information, including the possibility of fine and imprisonment for knowing violations.

REV	DATE	DESCRIPTION	REFERENCES
0	02/26/09	PERMIT RENEWAL	

PermaFix Northwest Richland, Inc

PERMAFIX NORTHWEST RICHLAND, INC.
2025 BATTELLE BLVD.
RICHLAND, WA

(AS-BUILT)

MIXED WASTE
IN-BARREL COMPACTOR
BLDG 13

DRAWN	S.NORTON
ENGR	
QA	

SCALE: NONE | SHT: 1 OF 1

PERMAFIX-DWG-MW-GA-009 | REV 0

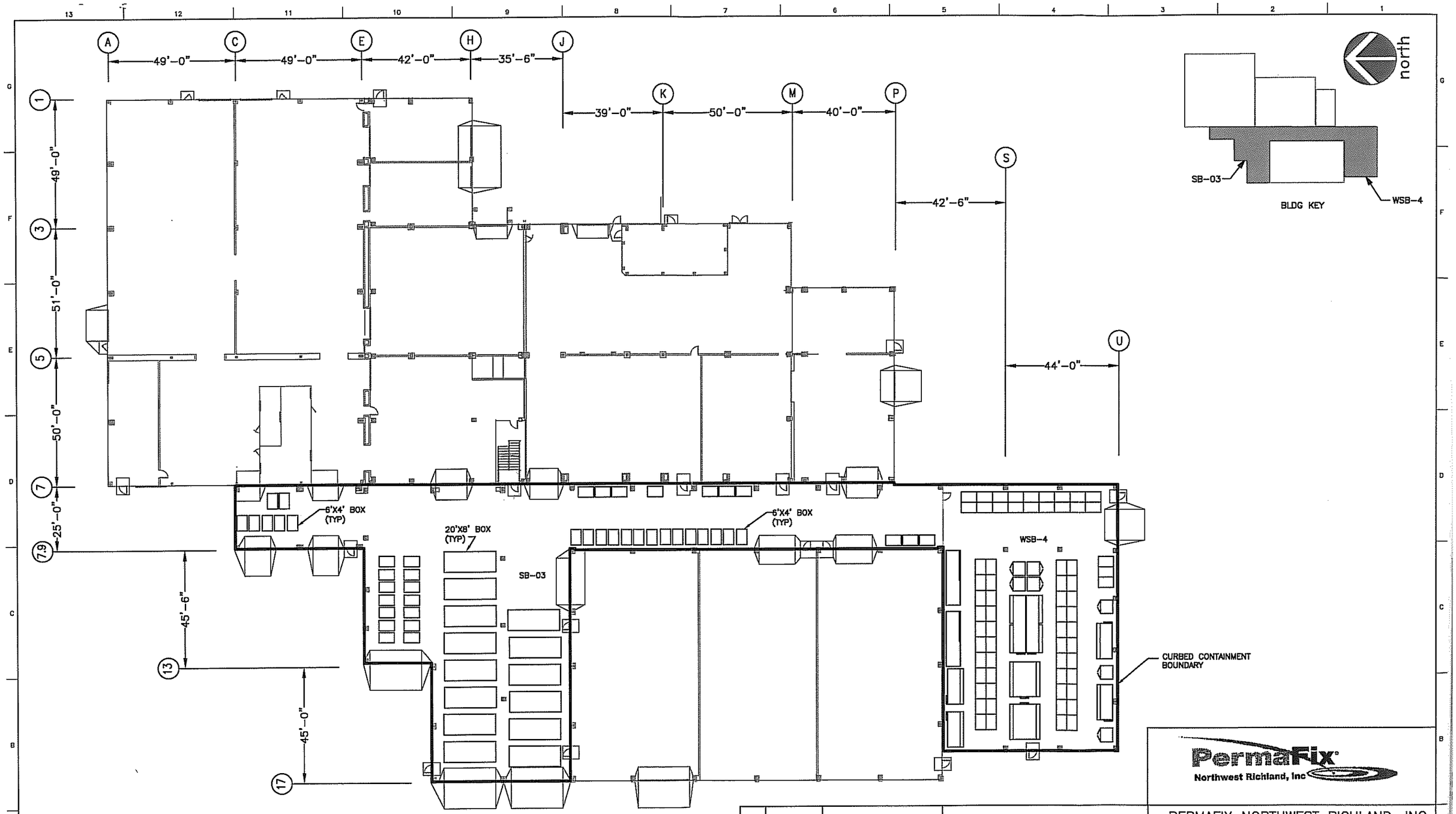

TYPICAL CONTAINER LAYOUT

PROFESSIONAL ENGINEERING CERTIFICATION
I certify under penalty of law that this document and all attachments were prepared under my direction or supervision in accordance with a system designed to assure that qualified personnel properly gather and evaluate the information submitted. Based upon my inquiry of the person or persons who manage the system, or those persons directly responsible for gathering the information, the information submitted is, to the best of my knowledge and belief, true, accurate, and complete. I am aware that there are significant penalties for submitting false information, including the possibility of fine and imprisonment for knowing violations.

REV	DATE	DESCRIPTION	REFERENCES
0	03/23/09	PERMIT RENEWAL	31001-MW-MECH-FLOOR

PermaFix Northwest Richland, Inc

PERMAFIX NORTHWEST RICHLAND, INC.
2025 BATTELLE BLVD.
RICHLAND, WA

(AS-BUILT)

MIXED WASTE
TYPICAL WASTE STORAGE
SB-03 TO WSB-4

DRAWN: S.NORTON
ENGR:
QA:

SCALE: NONE | SHT: 1 OF 1

PERMAFIX-DWG-MW-GA-010 | REV 0

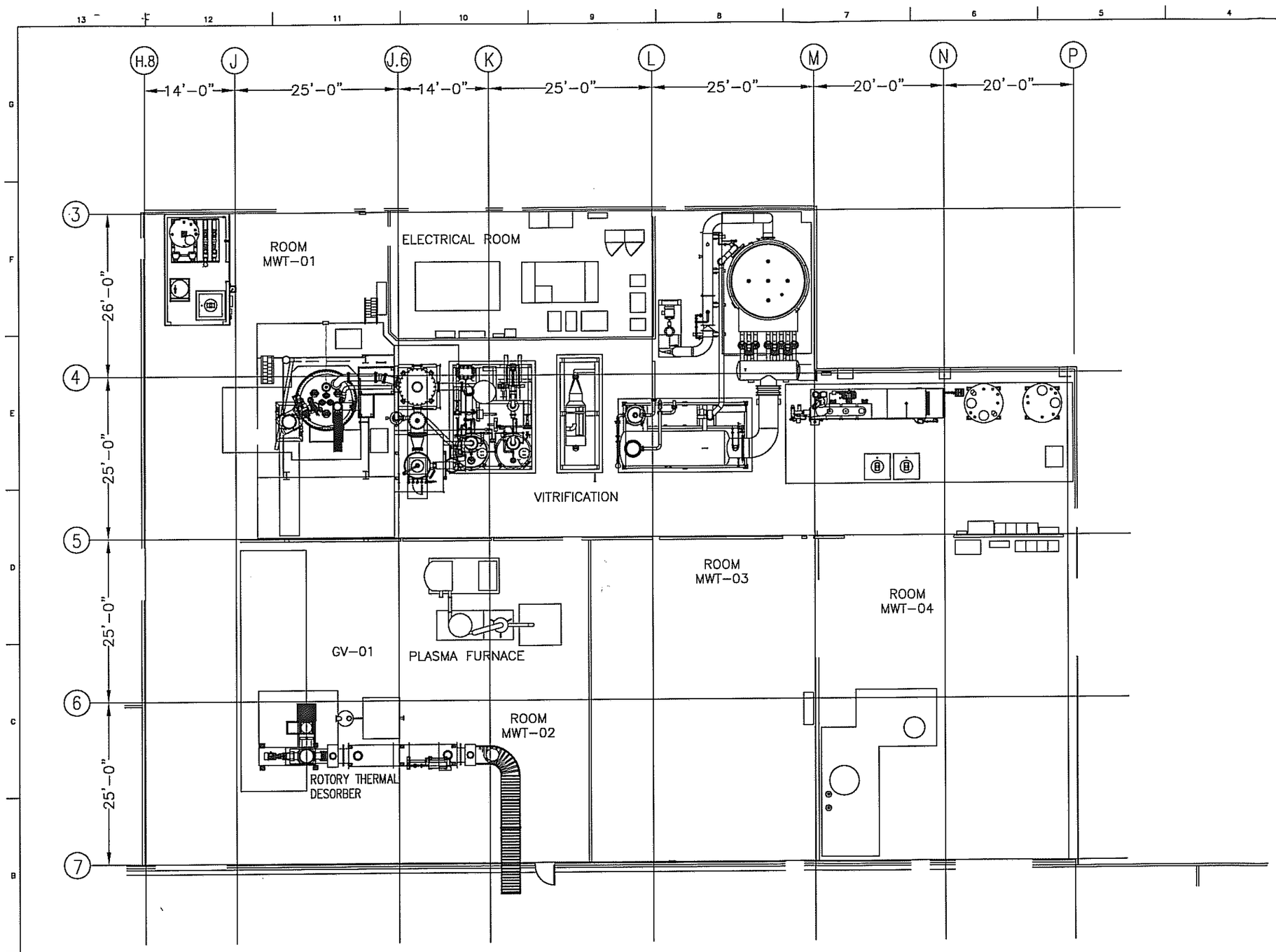

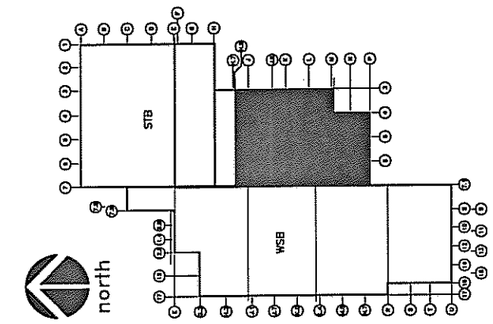

PROFESSIONAL ENGINEERING CERTIFICATION

I certify under penalty of law that this document and all attachments were prepared under my direction or supervision in accordance with a system designed to assure that qualified personnel properly gather and evaluate the information submitted. Based upon my inquiry of the person or persons who manage the system, or those persons directly responsible for gathering the information, the information submitted is, to the best of my knowledge and belief, true, accurate, and complete. I am aware that there are significant penalties for submitting false information, including the possibility of fine and imprisonment for knowing violations.

REV	DATE	DESCRIPTION	REFERENCES
1	01/07/09	PERMIT RENEWAL	
			31001-HV-152-SHT 4 REV 0
0	10/24/08	INITIAL AS-BUILT	31001-HV-152-SHT 3 REV 1

PermaFix® Northwest, Inc.

PERMAFIX NORTHWEST RICHLAND, INC.
2025 BATTELLE BLVD.
RICHLAND, WA

(AS-BUILT)

THERMAL AREA
FACILITY EQUIPMENT
GENERAL ARRANGEMENT

DRAWN: S.NORTON
ENGR:
QA:

SCALE: NONE | SHT: 1 OF 1

PERMAFIX-DWG-GVB-GA-FAC-001 | REV 1

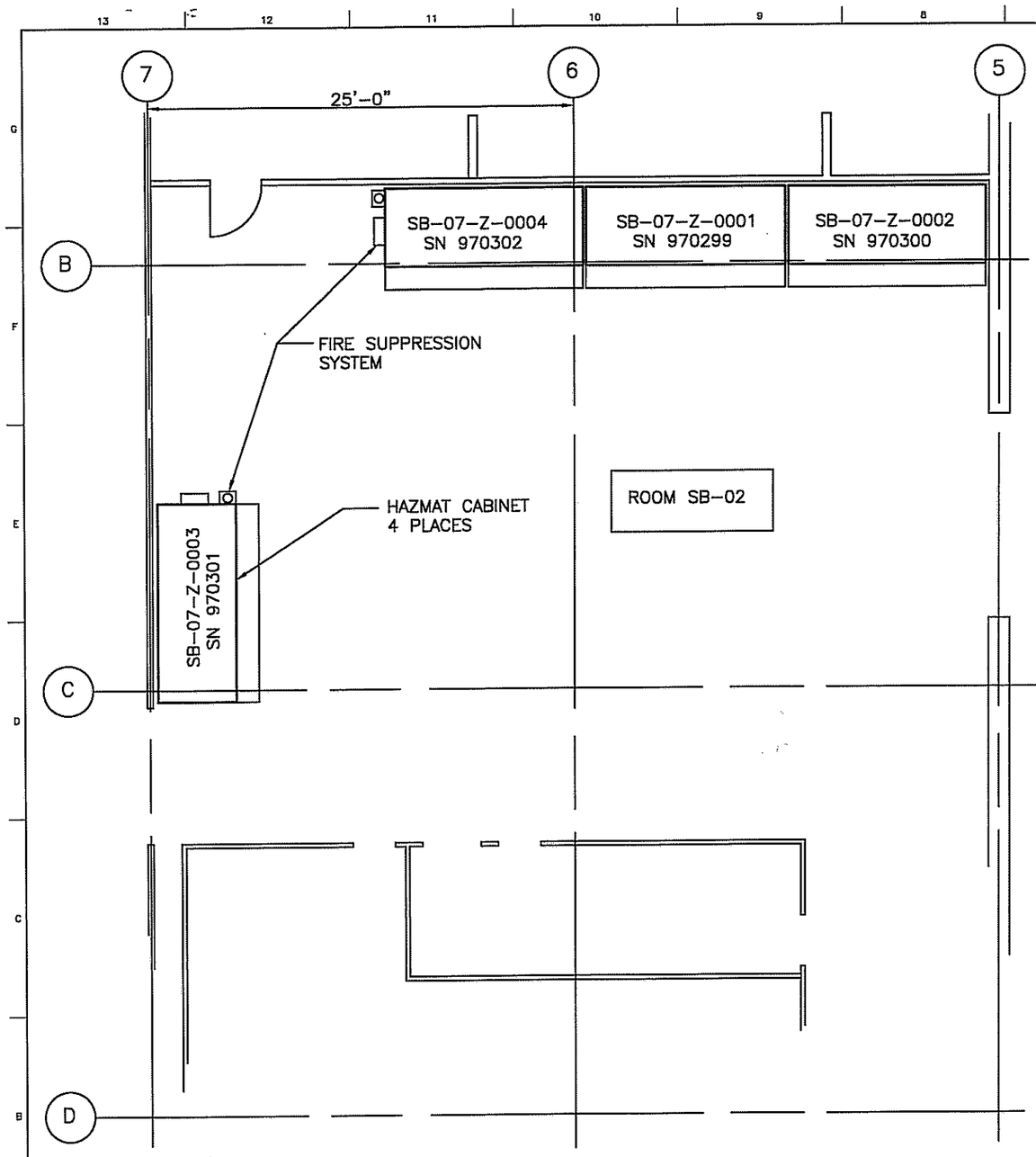

SCALE: 1/8" = 1'-0"

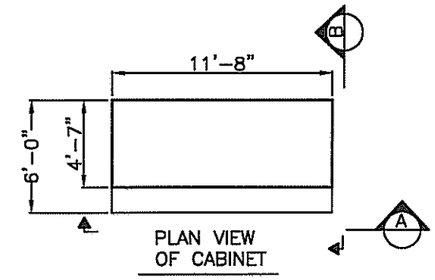

PLAN VIEW
OF CABINET

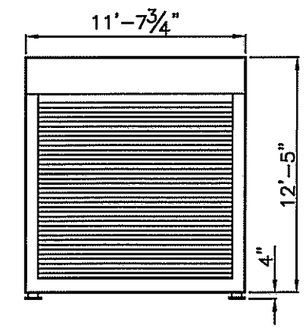

ELEVATION A

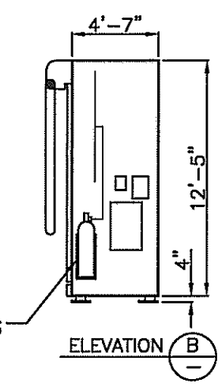

FIRE SUPPRESSION
SYSTEM ON CABINETS
SB-07-Z-0004 AND
SB-07-Z-0003

ELEVATION B

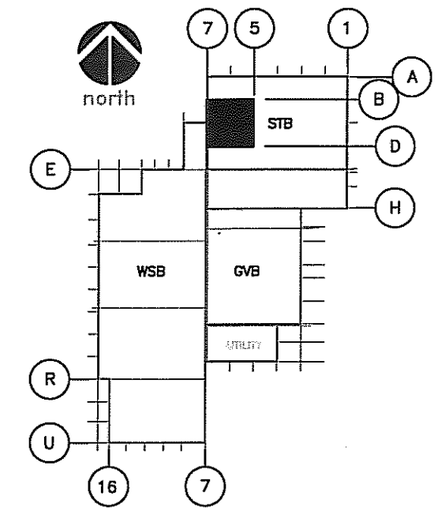

NOTES:

MANUFACTURED BY P & D SOLUTIONS CORPORATION. BASE MODEL L16-3107-F2-RD.
CONSTRUCTION: FULLY WELDED 11 GAUGE TUBULAR AND ANGLE FRAME COMPONENTS.
LOAD LEVELS: STORAGE---350 PSF, ROOF---40 PSF, WIND---30 PSF, SEISMIC--ZONE 2B.
SUMP CAPACITY: SUMP VOLUME (250 GALLON) EXCEEDS 100% OF THE LARGEST TANK OR 10% OF ALL WASTES STORED, WHICH EVER IS GREATER, AS REQUIRED BY EPA.

STORAGE PLATFORM: GALVANIZED STEEL GRATING.
FINISH: INTERIOR WALLS AND SUMP ARE TREATED WITH A CORROSION RESISTANT EPOXY.
VENTILATION: PASSIVE VENTILATION PROVIDED WITH 1 1/2 HOUR UL LISTED FIRE DAMPERS.
ACCESS: UNIT INCLUDES CHAIN OPERATED ROLLUP FIRE DOORS WHICH ARE LOCKABLE. DOORS ARE 1 1/2 HR FIRE RATED, UL LISTED AND INCLUDE NECESSARY AUTOMATIC CLOSING FOR INDOOR STORAGE.
GROUNDING: CONNECTED TO BUILDING GROUND VIA #6 COPPER WIRE AND GROUNDING CONNECTOR LOCATED ON EXTERIOR CORNER OF CABINET.
FIRE RATING: 2 HOUR RATING PER UL APPROVED DESIGN FOR WALLS, ROOF, AND SUMP. CONSTRUCTION PER UNIFORM FIRE CODE AND UL DESIGNS.

FIRE SUPPRESSION: PROVIDED ON UNITS SB-07-Z-003 AND SB-07-Z-004. THE SUPPRESSION SYSTEM IS FM APPROVED, UL LISTED, ANSUL IND-X DRY CHEMICAL FIRE SUPPRESSION SYSTEM. NOZZLES HAVE FUSIBLE LINK RATED AT 212 DEG.F. AUDIBLE ELECTRIC (110V) ALARM BELL, MANUAL PULL STATION. MANUAL PULL STATION, DRY CHEMICAL TANK, AND ALARM BELL ARE MOUNTED ON THE OUTSIDE OF THE CABINET.
ELECTRICAL COMPONENTS: ALL INTERIOR ELECTRICAL FITTINGS ARE NEMA 7 RATED FOR CLASS 1, DIV. 1, GROUP C AND D ENVIRONMENT. EXTERIOR ELECTRICAL BOXES, HOUSINGS, AND CONTROLS ARE NEMA 4 RATED. EXTERIOR CONDUITS AND FITTINGS ARE WEATHER TIGHT.
CONTROLS: GAS DETECTION MONITOR "ENMET CORPORATION, MODEL ISA-M" AND AUDIBLE ALARM PROVIDED FOR IGNITABLE (FLAMMABLE) AND REACTIVE STORAGE CABINETS.
COLOR: BLUE.
COATING. EXTERIOR IS COATED WITH A UV RESISTANT ACRYLIC ENAMEL.
EXPLOSION RELIEF: NOT REQUIRED.
TEMPERATURE CONTROL: NOT REQUIRED.
INSULATION: NOT REQUIRED.

PROFESSIONAL ENGINEERING CERTIFICATION
I certify under penalty of law that this document and all attachments were prepared under my direction or supervision in accordance with a system designed to assure that qualified personnel properly gather and evaluate the information submitted. Based upon my inquiry of the person or persons who manage the system, or those persons directly responsible for gathering the information, the information submitted is, to the best of my knowledge and belief, true, accurate, and complete. I am aware that there are significant penalties for submitting false information, including the possibility of fine and imprisonment for knowing violations.

REV	DATE	DESCRIPTION	REFERENCES
0	01/21/09	PERMIT RENEWAL	P & D DWG SB07Z0001-2
			FIELD WALKDOWN
			31001-M-100 3A

PermaFix
Northwest Richland, Inc

PERMAFIX NORTHWEST RICHLAND, INC.
2025 BATTELLE BLVD.
RICHLAND, WA

(AS-BUILT)

STABILIZATION
HAZMAT CONTAINERS
ROOM SB-02

DRAWN	S.NORTON
ENGR	
QA	

SCALE: AS SHOWN | SHT: 1 OF 1

PERMAFIX-DWG-STB-GA-SB02-002 | REV 0

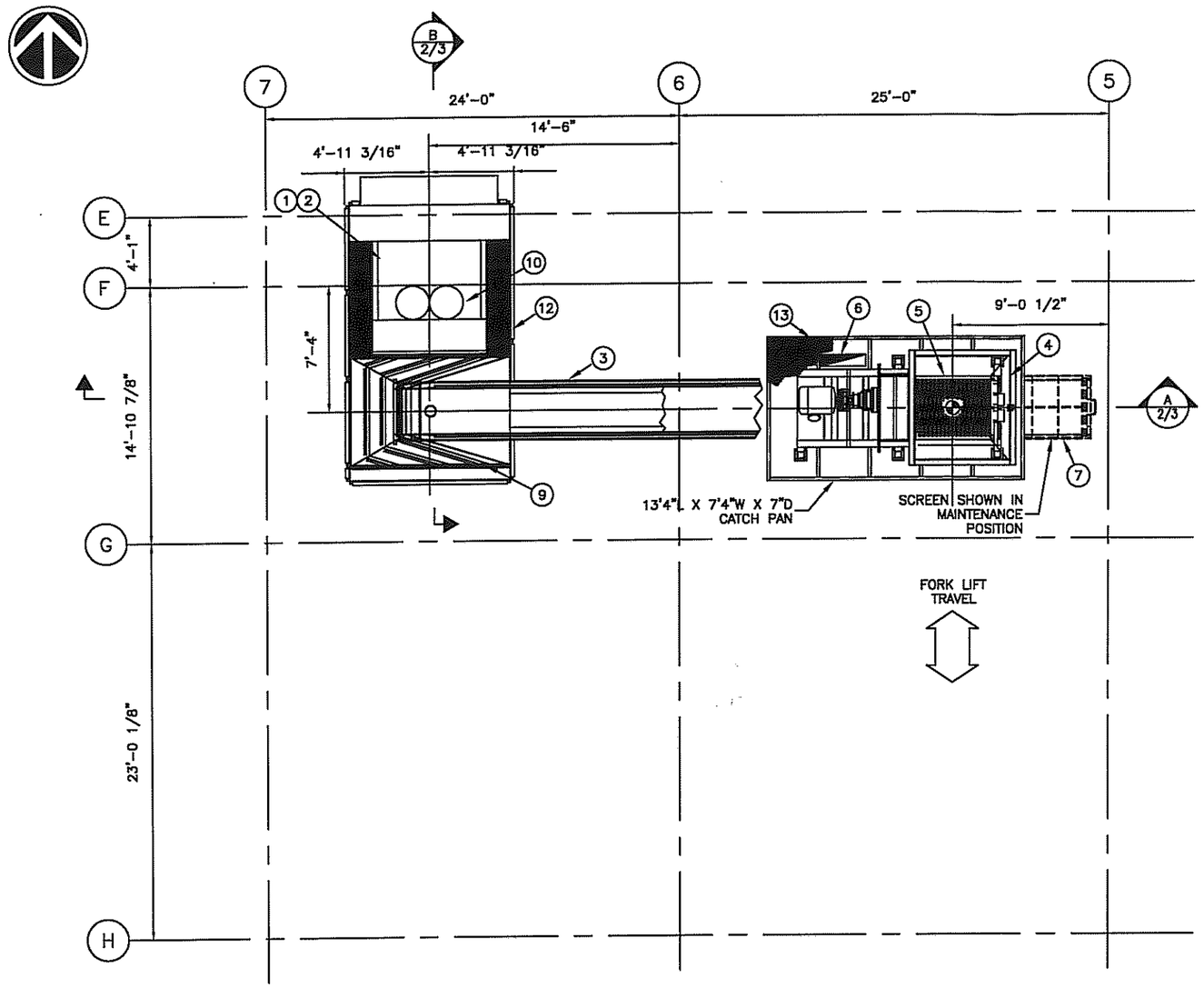

PLAN
SCALE: 1/8" = 1'-0"

BILL OF MATERIALS

NO.	QTY.	NAME	TAG#	SPEC.
1	1	DRUM DUMPER	E-0101	31001-SP-TP01
2	1	BIN DUMPER	E-0102	31001-SP-TP01
3	1	ENCLOSED METERING CONVEYOR	CV-0103	31001-SP-TP01
4	1	DUST TIGHT ENCLOSURE	–	31001-SP-TP01
5	1	SHREDDING SCREENING UNIT	SHR-0105	31001-SP-TP01
6	1	CONTROL PANEL	–	31001-SP-TP01
7	1	SHREDDER INERTING SYSTEM	–	31001-SP-TP01
8	1	FIRE EXTINGUISHER	–	31001-SP-TP01
9	1	BIN HOPPER	–	31001-SP-TP01
10	1	B-25 CONTAINER	–	–
11	1	IBC CONTAINER	–	–
12	1	CATCH PAN	–	31001-SP-TP01
13	1	CATCH PAN (SEE DETAIL SHEET 3)	–	31001-SP-TP01

NOTES:

1. FIELD TO PROVIDE _____" NITROGEN CONNECTION FOR NITROGEN INERTING SYSTEM (SEE SSI SHOP DRAWINGS)

PROFESSIONAL ENGINEERING CERTIFICATION

I certify under penalty of law that this document and all attachments were prepared under my direction or supervision in accordance with a system designed to assure that qualified personnel properly gather and evaluate the information submitted. Based upon my inquiry of the person or persons who manage the system, or those persons directly responsible for gathering the information, the information submitted is, to the best of my knowledge and belief, true, accurate, and complete. I am aware that there are significant penalties for submitting false information, including the possibility of fine and imprisonment for knowing violations.

REV	DATE	DESCRIPTION	REFERENCES
0	03/25/09	PERMIT RENEWAL	31001-EA-101-1 REV. 0

PermaFix Northwest Richland, Inc

PERMAFIX NORTHWEST RICHLAND, INC.
2025 BATTELLE BLVD.
RICHLAND, WA

DRAWN: S.NORTON
ENGR:
QA:

STABILIZATION
SIZE REDUCTION AND SCREENING
GENERAL ARRANGEMENT TP-01

SCALE: AS SHOWN | SHT: 1 OF 3

PERMAFIX-DWG-STB-GA-TP01-001 | REV 0

NOTES:

1. EQUIPMENT SHOWN HERE SUPPLIED AS AN ASSEMBLED UNIT BY SSI SHEARING SYSTEMS Inc.

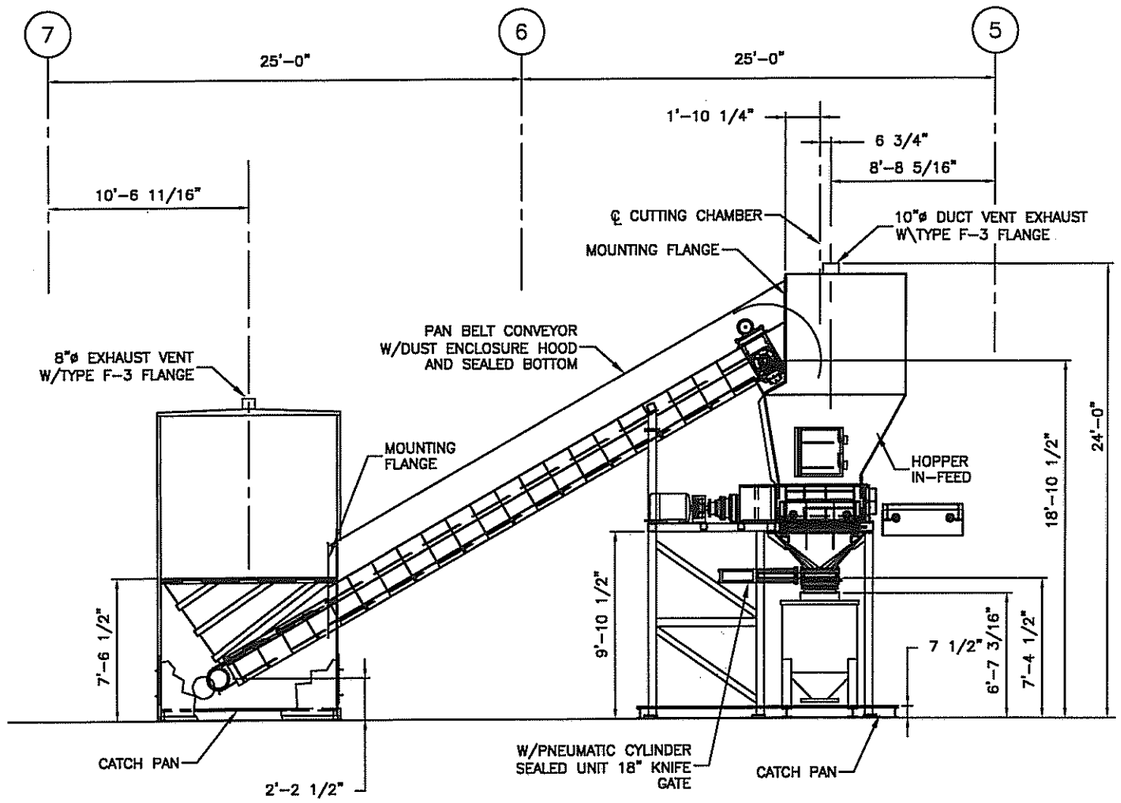

A 1/3 SECTION
SCALE: 1/8" = 1'-0"

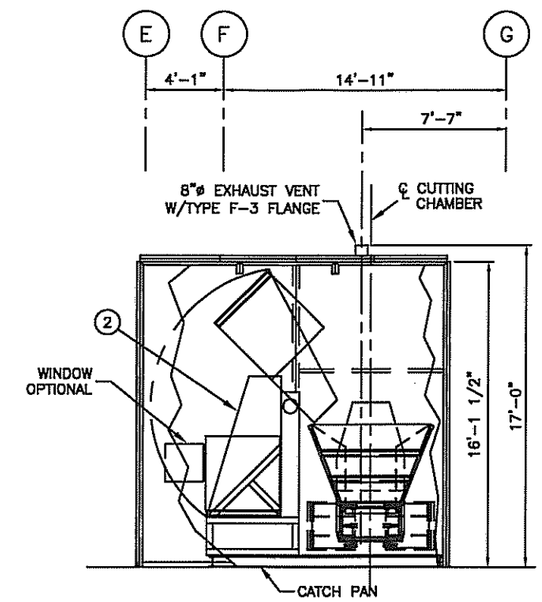

B 1/3 SECTION
SCALE: 1/8" = 1'-0"

PROFESSIONAL ENGINEERING CERTIFICATION

I certify under penalty of law that this document and all attachments were prepared under my direction or supervision in accordance with a system designed to assure that qualified personnel properly gather and evaluate the information submitted. Based upon my inquiry of the person or persons who manage the system, or those persons directly responsible for gathering the information, the information submitted is, to the best of my knowledge and belief, true, accurate, and complete. I am aware that there are significant penalties for submitting false information, including the possibility of fine and imprisonment for knowing violations.

REV	DATE	DESCRIPTION	REFERENCES
0	03/25/09	PERMIT RENEWAL	31001-EA-101-2 REV. 0

PermaFix Northwest Richland, Inc

PERMAFIX NORTHWEST RICHLAND, INC.
2025 BATTELLE BLVD.
RICHLAND, WA

STABILIZATION
SIZE REDUCTION AND SCREENING
GENERAL ARRANGEMENT TP-01

DRAWN	S.NORTON
ENGR	
QA	

SCALE: AS SHOWN | SHT: 2 OF 3

PERMAFIX-DWG-STB-GA-TP01-001 | REV 0

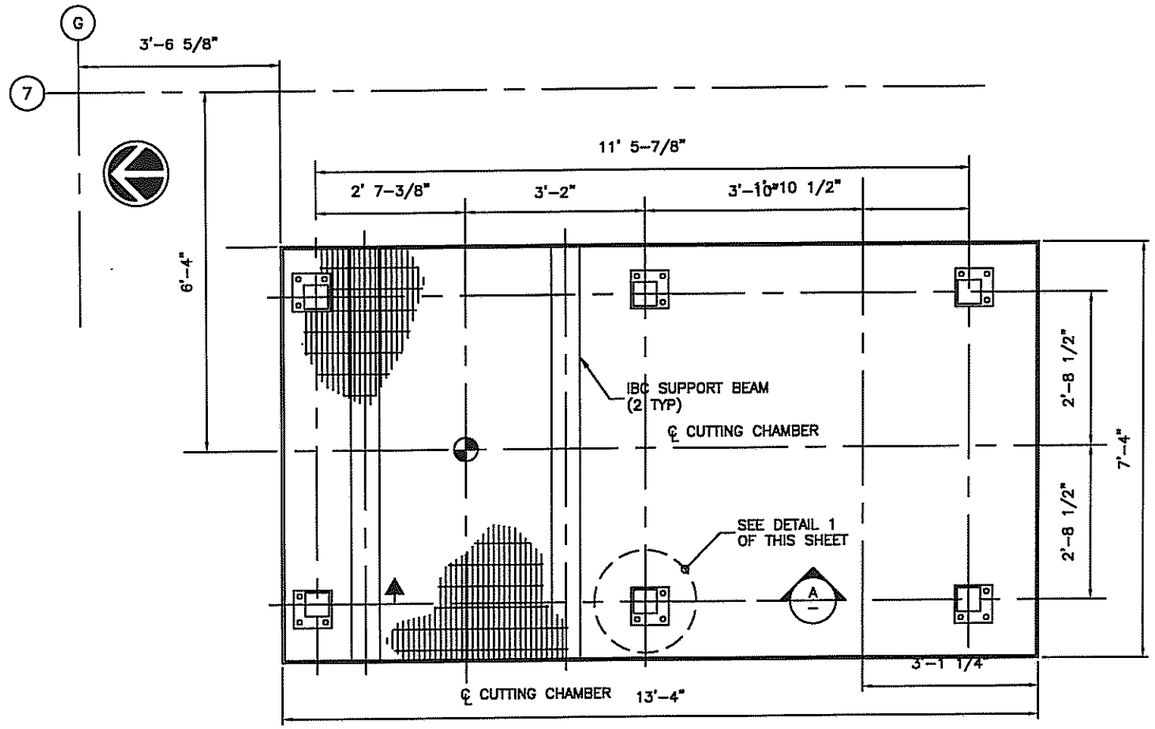

CATCH PAN & BASE PLATE SETTING PLAN
SCALE: 3/8" = 1'-0"

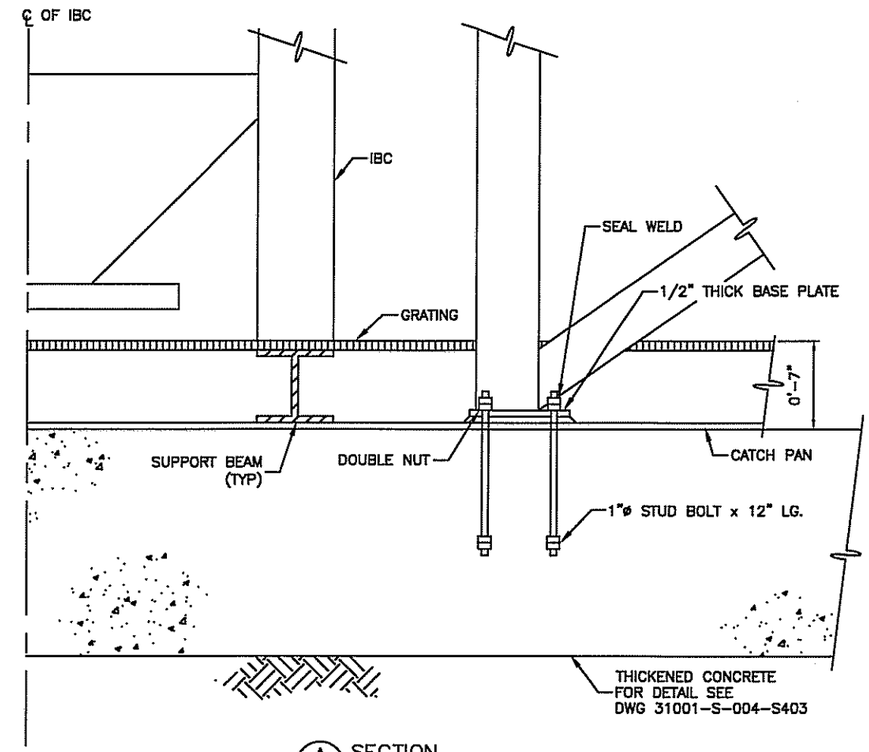

A
–
SECTION
SCALE: 1" = 1'-0"

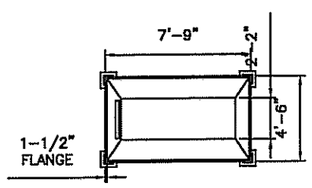

PLAN VIEW

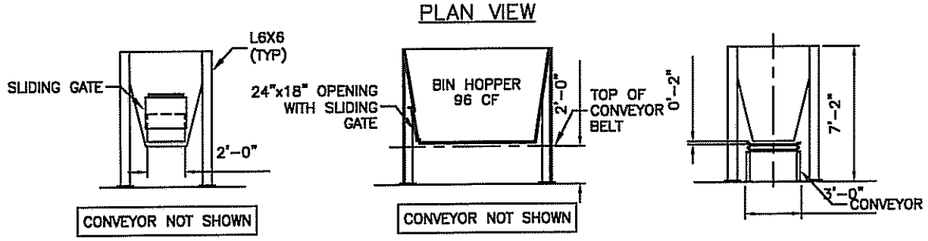

LEFT VIEW FRONT VIEW RIGHT VIEW

2/3 DETAIL: -BIN HOPPER
SCALE: 1/8" = 1'-0"

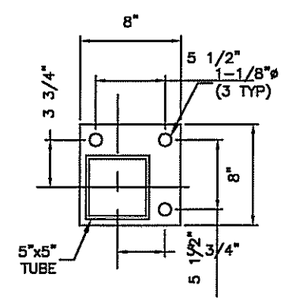

1
3/3
DETAIL
SCALE: 1" = 1'-0"

PROFESSIONAL ENGINEERING CERTIFICATION
I certify under penalty of law that this document and all attachments were prepared under my direction or supervision in accordance with a system designed to assure that qualified personnel properly gather and evaluate the information submitted. Based upon my inquiry of the person or persons who manage the system, or those persons directly responsible for gathering the information, the information submitted is, to the best of my knowledge and belief, true, accurate, and complete. I am aware that there are significant penalties for submitting false information, including the possibility of fine and imprisonment for knowing violations.

REV	DATE	DESCRIPTION	REFERENCES
0	03/25/09	PERMIT RENEWAL	31001-EA-101-3 REV. 0

DRAWN	S.NORTON
ENGR	
QA	

PermaFix
Northwest Richland, Inc

PERMAFIX NORTHWEST RICHLAND, INC.
2025 BATTELLE BLVD.
RICHLAND, WA

STABILIZATION
SIZE REDUCTION AND SCREENING
GENERAL ARRANGEMENT TP-01

SCALE: AS SHOWN | SHT: 3 OF 3

PERMAFIX-DWG-STB-GA-TP01-001 | REV 0

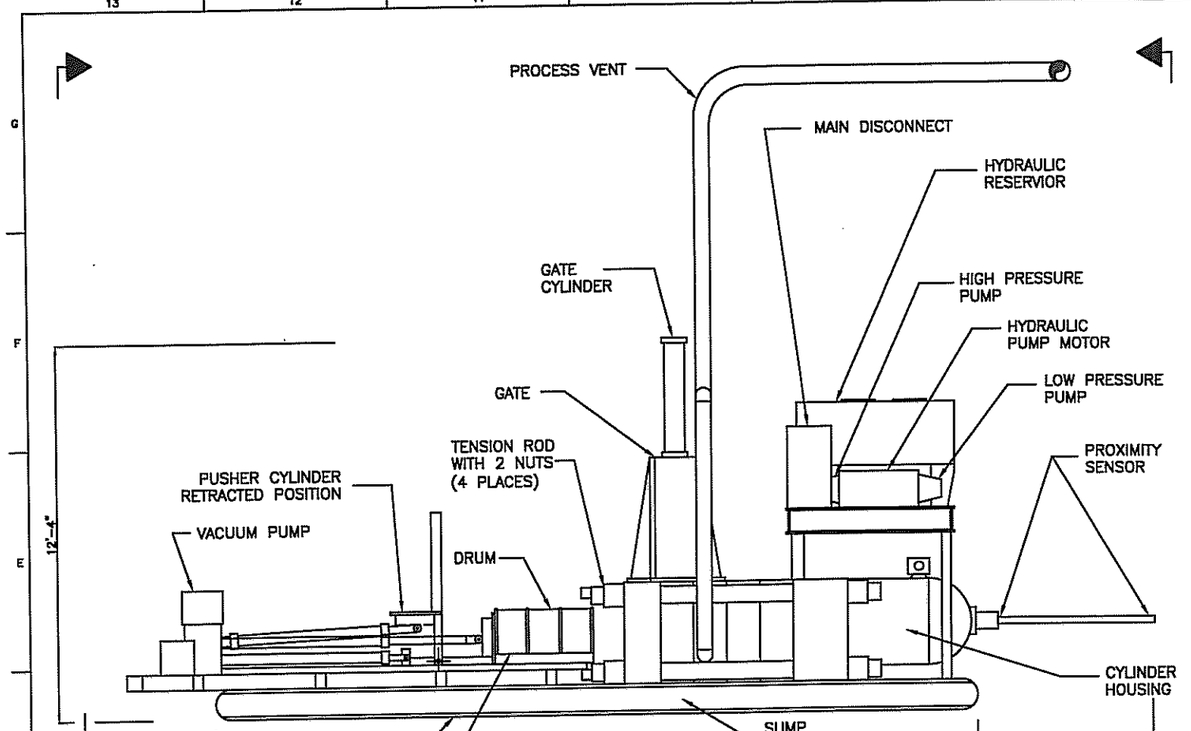

SIDE VIEW

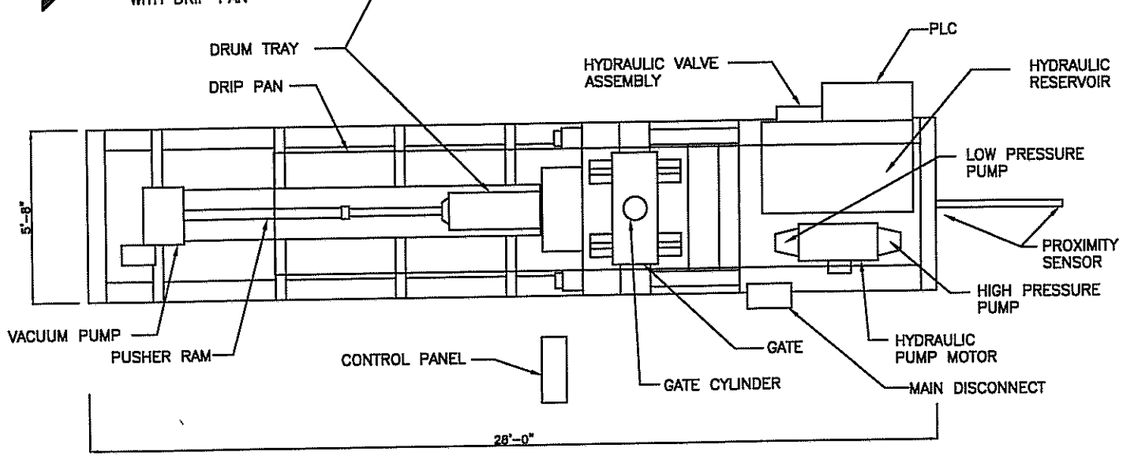

PLAN VIEW

NOTES:

SYSTEM START-UP:
(NOTE: THIS SYSTEM IS TYPICALLY LEFT ON)

(1. Make sure the screen on the control panel is not dark. (SEE SHEET 2 "CONTROL PANEL" SCREEN DETAIL)

(2. If screen is dark, pull out the E-Stop button. If screen does not lite up after pulling the E-Stop button, have outside support check to make sure electrical breakers are on for the "control power" and "main power" for the supercompactor.

(3. If control panel is lit up and showing a display, then turn the system switch from "Off" to "On", starting the hydraulic unit.

(4. Before starting the "AUTO" cycle, push the "MONITOR" button on the control panel to see if all systems are in their retracted positions. If not in their retracted positions, refer to "MANUAL CONTROL" below, notes #2 and #3.
(Note: When the press is retracted, both the "EXTEND" and "RETRACT" buttons will be dark.)

(5. With everything retracted, push the "RESET" button on the control panel, then push the "MAIN" button on the control panel, this will have everything ready to start the "AUTO" cycle.

AUTO CYCLE

(1. To start the AUTO cycle, push the "AUTO" button once, button light will turn green indicating "AUTO" cycle is in progress.
If for any reason you need to pause the "AUTO" cycle, push the "AUTO" button again, the green light will start blinking on and off, indicating the "AUTO" cycle has been paused.
To restart the "AUTO" cycle, push the "AUTO" button again and the light will turn solid green.

DURING THE AUTO CYCLE:
Loader ram will push a drum onto the loading tray, then the loading tray will lower down to insert drum into the chamber by means of the pusher and tray moving forward. After the drum is in the chamber, the tray and pusher will back out. The gate will close and the press will start the compaction cycle. After reaching 4000 psi the press will back up, relieving pressure on the gate so that the gate can open. The tray will move forward to allow the press to push the puck onto the tray, then the pusher will extend to attach the vacuum cup to the puck, pulling the puck onto the tray.
The tray and the pusher will retract to the home position allowing the unloader to unload the puck and return home.
After the unloader is in the home position the press will retract home, the "AUTO" button will go dark, indicating the cycle is complete.

MANUAL CONTROL

(1. After turning on the system, push the "MANUAL SCREEN" button to get into the manual mode.

(2. Push the "MANUAL-ON" button to activate the manual system. "MANUAL ACTIVE" will appear on the screen.

(3. Select a component from the MANUAL SCREEN you want to operate. To move the component, push either the "EXTEND" or "RETRACT" button.
(NOTE: The only component not using the EXTEND or RETRACT button is the vacuum.
The vacuum will come on by highlighting the "VACUUM" button.)

ALARMS:
"LOW OIL LEVEL"
On a low oil level condition in the hydraulic reservior, the system will shut down and display a "Low Oil Level". Oil must be added to the reservior for the system to run again.
"HIGH OIL TEMP 135 DEG F."
This message will display when oil temperature rises above 135 Deg. F. Adjust water flow to heat exchanger, to maintain 120 Deg. F. reservior temperature.
"HIGH OIL TEMP SHUTDOWN"
Above 150 Deg. F. the system will shut down. It cannot be restarted until the reservior temperature drops below 150 Deg. F.

CALL UP KEYS:
"TEMP" This key calls up reservior oil temperature. After 3 seconds the previous display returns.
"PRESSURE" This key calls up press force in tons.

PROGRAMMABLE VARIABLES:
"MAX PRESSURE" Crush force is adjustable up to 1500 tons.
1.) Push "MAX PRESSURE"
2.) Push "CLR"
3.) Enter a value of 4,000 or less. 4,000 psi corresponds to 1500 tons.
4.) Push "ENT"
5.) Let display time-out, revealing previous display.

INTERLOCKS:
1.) Gate will not close unless the "drum tray" is fully retracted.
2.) Gate will not open until press is decompressed.
3.) Will not start to press unless gate is fully closed.
4.) Press will not retract unless press is decompressed first.
(CAUTION: In manual over-ride it is possible to close the gate on the extended ram.)

PROFESSIONAL ENGINEERING CERTIFICATION
I certify under penalty of law that this document and all attachments were prepared under my direction or supervision in accordance with a system designed to assure that qualified personnel properly gather and evaluate the information submitted. Based upon my inquiry of the person or persons who manage the system, or those persons directly responsible for gathering the information, the information submitted is, to the best of my knowledge and belief, true, accurate, and complete. I am aware that there are significant penalties for submitting false information, including the possibility of fine and imprisonment for knowing violations.

REV	DATE	DESCRIPTION	REFERENCES
1	02/25/09	PERMIT RENEWAL	
0	12/15/08	INITIAL AS-BUILT	31001-EA-101 SHT 1 & 2

PermaFix Northwest Richland, Inc

PERMAFIX NORTHWEST RICHLAND, INC.
2025 BATTELLE BLVD.
RICHLAND, WA

(AS-BUILT)

STABILIZATION
SUPERCOMPACTOR EQUIPMENT
GENERAL ARRANGEMENT

DRAWN: S.NORTON
ENGR:
QA:
SCALE: AS SHOWN
SHT: 1 OF 4
PERMAFIX-DWG-STB-GA-TP07-001
REV 1

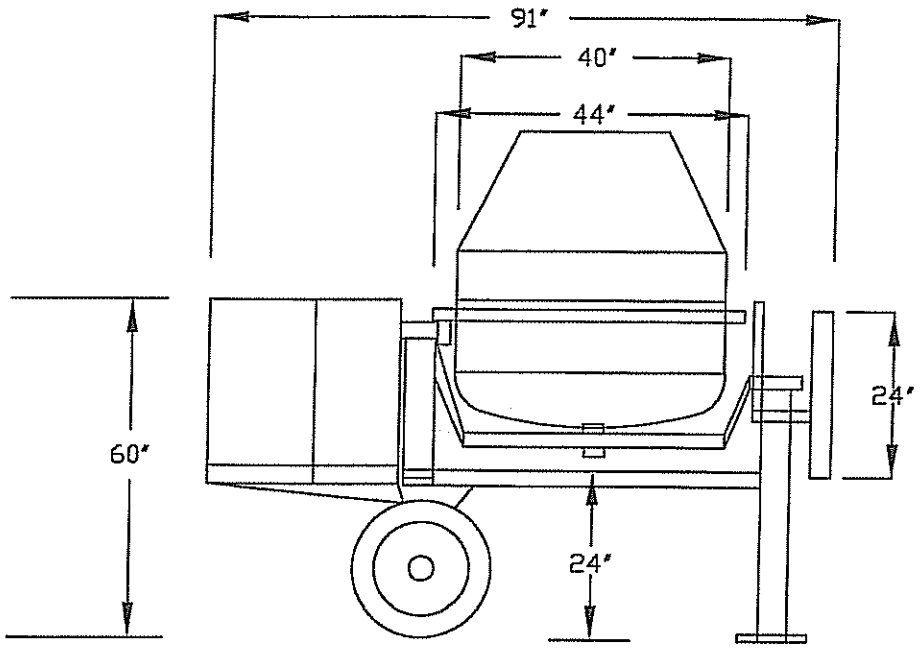

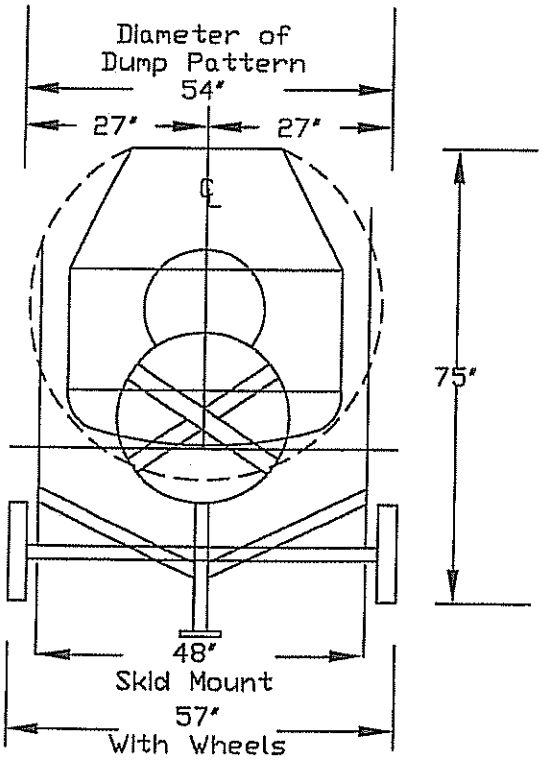

TP-10 EXTRACTION MIXER
PERMA-FIX NORTHWEST RICHLAND, INC.

APPROX. SCALE: NONE

SCHREIBER & YONLEY ASSOCIATES
ENVIRONMENTAL ENGINEERS

CHECKED BY:	DRAWN BY:	DATE DRAWN:	PROJECT #:	DRAWING NO.:
LMF	BAH	03-23-09	PFINW070116-2	DWG-TP10-001

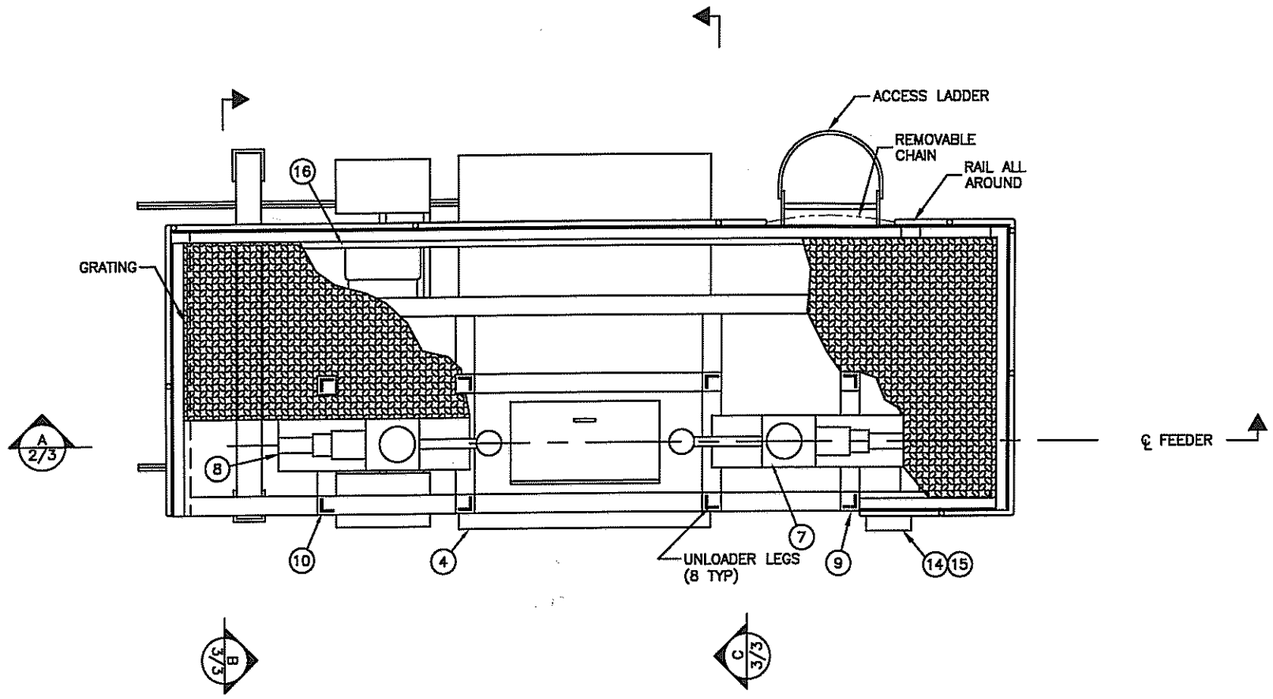

PLAN – PLATFORM LEVEL
SCALE:1/4"=1'-0"

BILL OF MATERIALS		
NO.	QTY.	NAME
1	1	DISPOSAL CONTAINER
2	1	LOADING FLANGE
3	1	DISCHARGE DUST COVER
4	1	MIXER
5	1	LOAD CELL BLOCK
6	–	–
7	1	REAGENT SCREW FEEDER
8	1	WASTE SCREW FEEDER
9	1	REAGENT UNLOADER STAND
10	1	WASTE UNLOADER STAND
11	2	6" BOOT
12	1	12" BOOT
13	1	18"x18" SQUARE BOOT
14	1	CONTROL PANEL
15	1	MOTOR START/STOP PANEL
16	1	PLATFORM

NOTES
1. ALL CONNECTIONS TO THE MIXER TO BE FLEXIBLE TO ISOLATE THE UNIT FOR WEIGHING BY LOAD CELL SYSTEM.

PROFESSIONAL ENGINEERING CERTIFICATION
I certify under penalty of law that this document and all attachments were prepared under my direction or supervision in accordance with a system designed to assure that qualified personnel properly gather and evaluate the information submitted. Based upon my inquiry of the person or persons who manage the system, or those persons directly responsible for gathering the information, the information submitted is, to the best of my knowledge and belief, true, accurate, and complete. I am aware that there are significant penalties for submitting false information, including the possibility of fine and imprisonment for knowing violations.

REV	DATE	DESCRIPTION	REFERENCES
0	03/25/09	PERMIT RENEWAL	31001–EA–110–1 REV. A

PermaFix Northwest Richland, Inc

PERMAFIX NORTHWEST RICHLAND, INC.
2025 BATTELLE BLVD.
RICHLAND, WA

STABILIZATION
HIGH CAPACITY MIXING
GENERAL ARRANGEMENT TT–01

DRAWN S.NORTON
ENGR
QA
SCALE: AS SHOWN SHT: 1 OF 3
PERMAFIX–DWG–STB–GA–TT01–001 REV 0

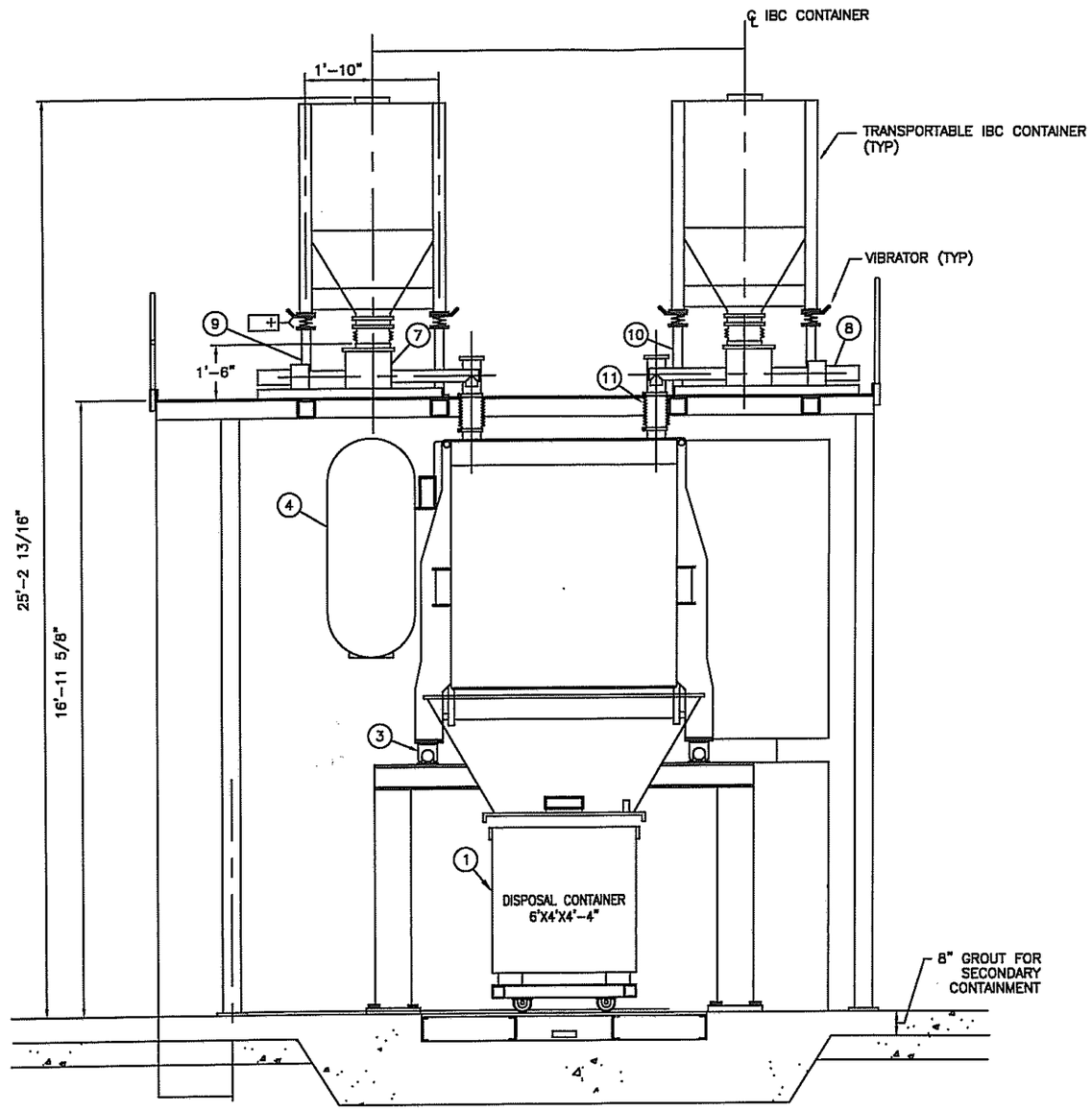

A 1/3 SECTION
SCALE: 1/4" = 1'-0"

PROFESSIONAL ENGINEERING CERTIFICATION
I certify under penalty of law that this document and all attachments were prepared under my direction or supervision in accordance with a system designed to assure that qualified personnel properly gather and evaluate the information submitted. Based upon my inquiry of the person or persons who manage the system, or those persons directly responsible for gathering the information, the information submitted is, to the best of my knowledge and belief, true, accurate, and complete. I am aware that there are significant penalties for submitting false information, including the possibility of fine and imprisonment for knowing violations.

REV	DATE	DESCRIPTION	REFERENCES
0	03/25/09	PERMIT RENEWAL	31001-EA-110-2 REV. A

PermaFix Northwest Richland, Inc

PERMAFIX NORTHWEST RICHLAND, INC.
2025 BATTELLE BLVD.
RICHLAND, WA

STABILIZATION
HIGH CAPACITY MIXING
GENERAL ARRANGEMENT TT-01

DRAWN S.NORTON
ENGR
QA

SCALE: AS SHOWN SHT: 2 OF 3
PERMAFIX-DWG-STB-GA-TT01-001 REV 0

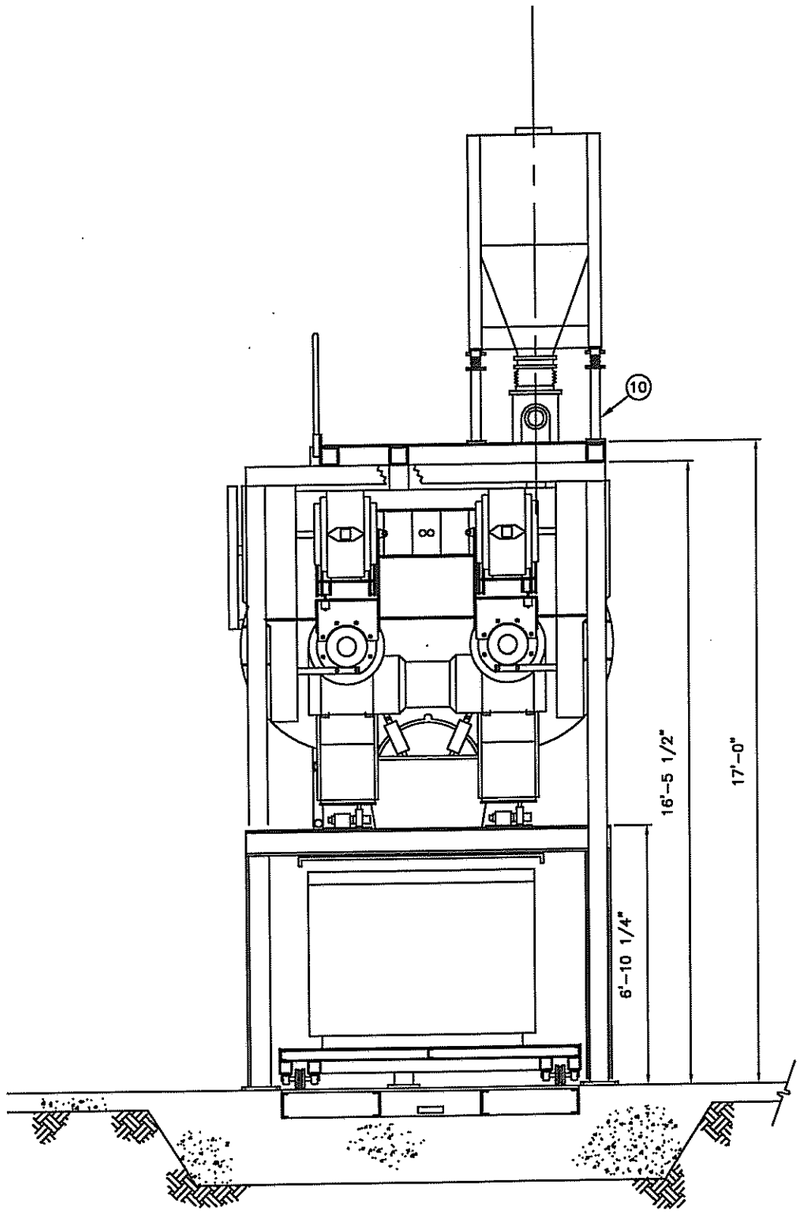

B 1/3 SECTION
SCALE: 1/4" = 1'-0"

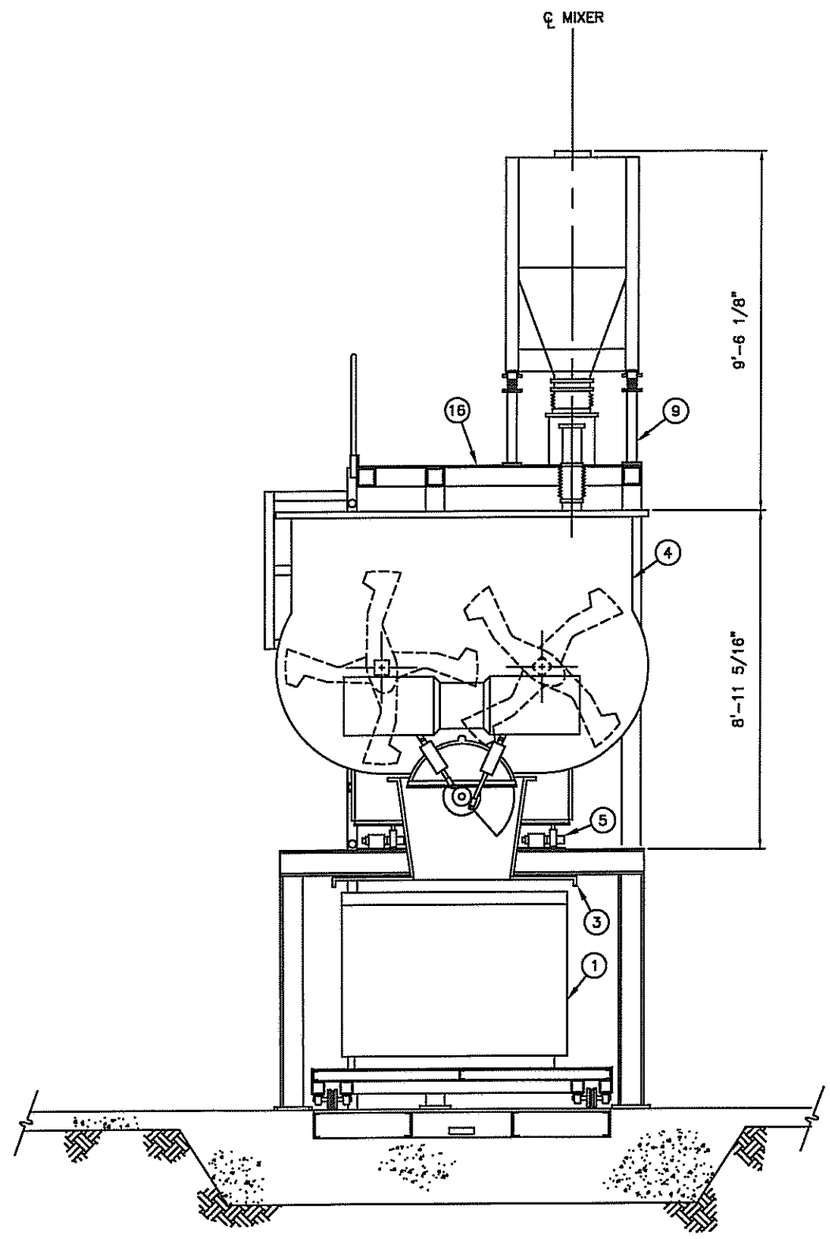

C 1/3 SECTION
SCALE: 1/4" = 1'-0"

PROFESSIONAL ENGINEERING CERTIFICATION
I certify under penalty of law that this document and all attachments were prepared under my direction or supervision in accordance with a system designed to assure that qualified personnel properly gather and evaluate the information submitted. Based upon my inquiry of the person or persons who manage the system, or those persons directly responsible for gathering the information, the information submitted is, to the best of my knowledge and belief, true, accurate, and complete. I am aware that there are significant penalties for submitting false information, including the possibility of fine and imprisonment for knowing violations.

REV	DATE	DESCRIPTION	REFERENCES
0	03/25/09	PERMIT RENEWAL	31001-EA-110-3 REV. A

PermaFix
Northwest Richland, Inc

PERMAFIX NORTHWEST RICHLAND, INC.
2025 BATTELLE BLVD.
RICHLAND, WA

STABILIZATION
HIGH CAPACITY MIXING
GENERAL ARRANGEMENT TT-01

DRAWN	S.NORTON
ENGR	
QA	

SCALE: AS SHOWN | SHT: 3 OF 3

PERMAFIX-DWG-STB-GA-TT01-001 | REV 0

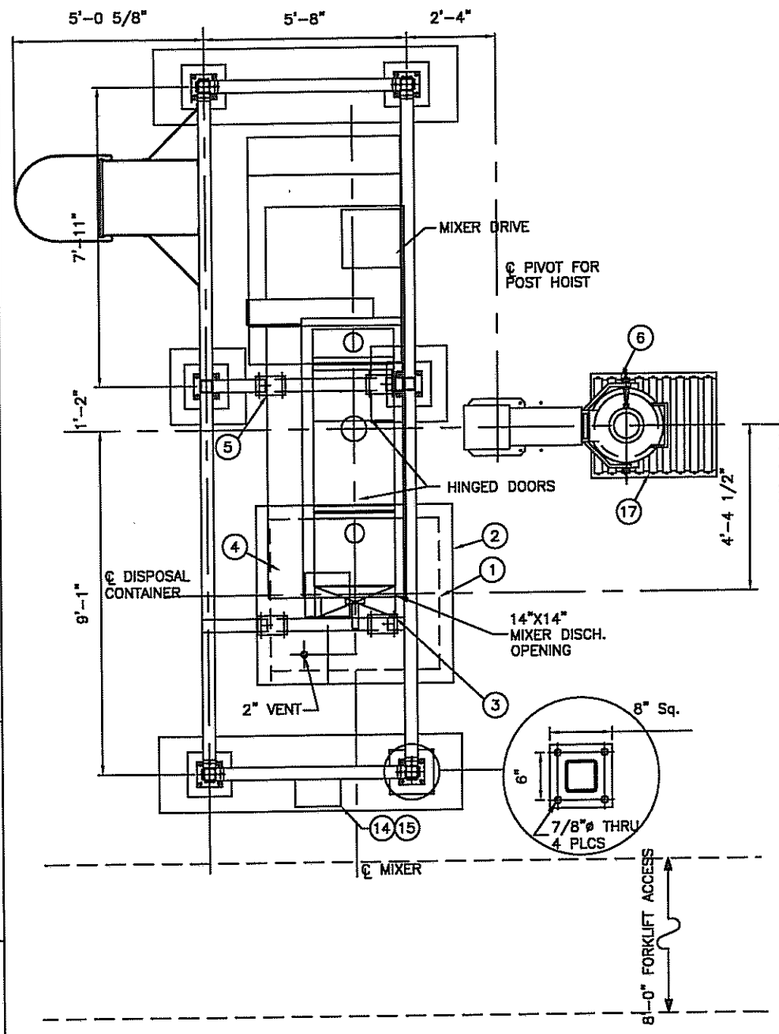

PLAN – BELOW MIXER
SCALE: 1/4" = 1'-0"

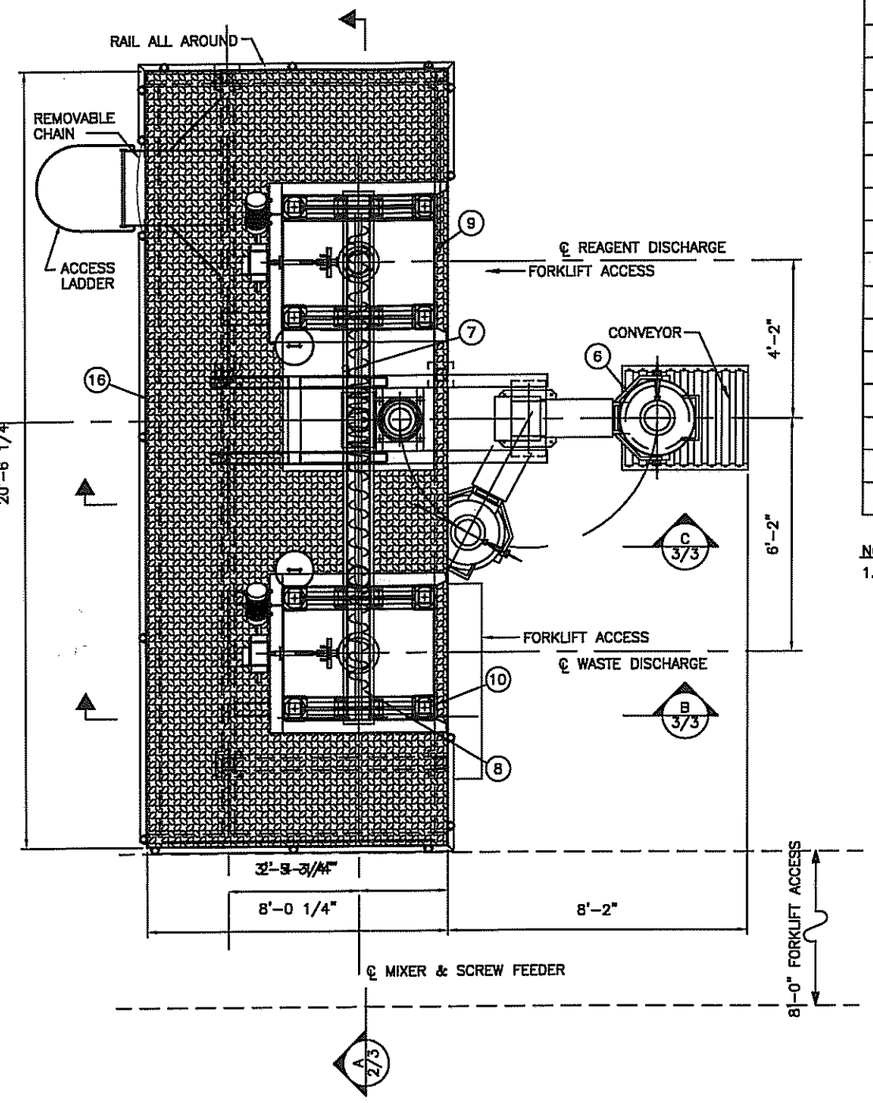

PLAN – PLATFORM LEVEL
SCALE: 1/4" = 1'-0"

BILL OF MATERIALS

NO.	QTY.	NAME	TAG#	SPEC.
1	1	DISPOSAL CONTAINER	C-0205	31001-SP-TT02
2	1	LOADING FLANGE	–	31001-SP-TT02
3	1	DISCHARGE DUST COVER	–	31001-SP-TT02
4	1	MIXER	MX-0204	31001-SP-TT02
5	1	LOAD CELL BLOCK	–	31001-SP-TT02
6	1	DRUM UNLOADER	–	31001-SP-TT02
7	1	REAGENT SCREW FEEDER	F-0206	31001-SP-TT02
8	1	WASTE SCREW FEEDER	F-0203	31001-SP-TT02
9	1	REAGENT UNLOADER STAND	–	31001-SP-TT02
10	1	WASTE UNLOADER STAND	–	31001-SP-TT02
11	2	6" BOOT	–	31001-SP-TT02
12	1	12" BOOT	–	31001-SP-TT02
13	1	14"x14" SQUARE BOOT	–	31001-SP-TT02
14	1	CONTROL PANEL	–	31001-SP-TT02
15	1	MOTOR START/STOP PANEL	–	31001-SP-TT02
16	1	PLATFORM	–	31001-SP-TT02
17	1	LOADING CONVEYOR	–	31001-SP-TT02

NOTES
1. ALL CONNECTIONS TO THE MIXER TO BE FLEXIBLE TO ISOLATE THE UNIT FOR WEIGHING BY LOAD CELL SYSTEM.

PROFESSIONAL ENGINEERING CERTIFICATION
I certify under penalty of law that this document and all attachments were prepared under my direction or supervision in accordance with a system designed to assure that qualified personnel properly gather and evaluate the information submitted. Based upon my inquiry of the person or persons who manage the system, or those persons directly responsible for gathering the information, the information submitted is, to the best of my knowledge and belief, true, accurate, and complete. I am aware that there are significant penalties for submitting false information, including the possibility of fine and imprisonment for knowing violations.

REV	DATE	DESCRIPTION	REFERENCES
0	03/25/09	PERMIT RENEWAL	31001-EA-111-1 REV. 0

PermaFix Northwest Richland, Inc

PERMAFIX NORTHWEST RICHLAND, INC.
2025 BATTELLE BLVD.
RICHLAND, WA

STABILIZATION
LOW CAPACITY MIXING
GENERAL ARRANGEMENT TT-02

DRAWN S.NORTON
ENGR
QA
SCALE: AS SHOWN
SHT: 1 OF 3
PERMAFIX-DWG-STB-GA-TT02-001
REV 0

NOTES
1. SEE SHEET 1 FOR BILL OF MATERIALS
2. EQUIPMENT SHOWN HERE WILL BE SUPPLIED AS ASSEMBLED UNIT BY TOTE SYSTEMS–SEE SPECIFICATION 31001–SP–TT02

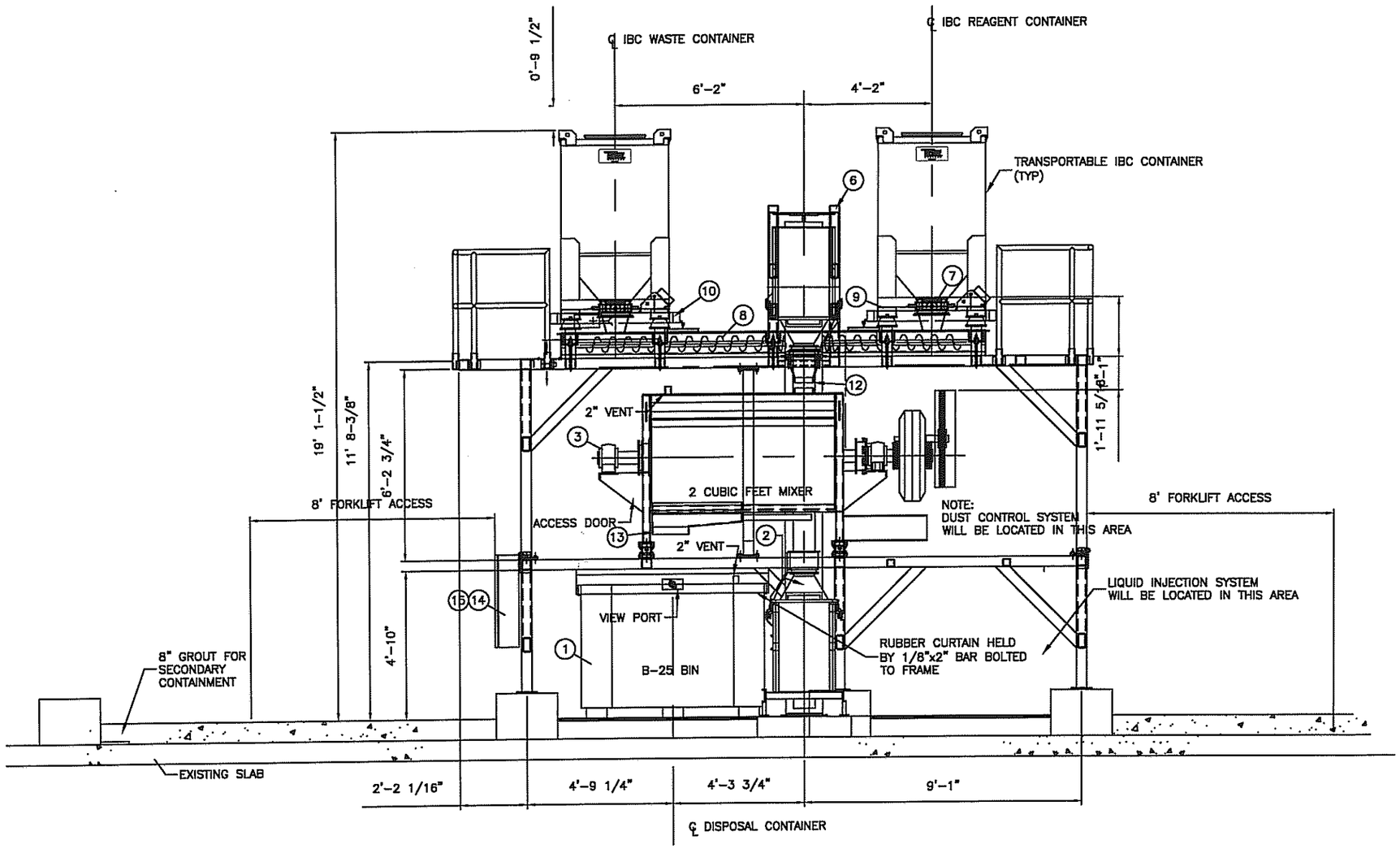

A 1/3 SECTION
SCALE: 1/4" = 1'–0"

PROFESSIONAL ENGINEERING CERTIFICATION
I certify under penalty of law that this document and all attachments were prepared under my direction or supervision in accordance with a system designed to assure that qualified personnel properly gather and evaluate the information submitted. Based upon my inquiry of the person or persons who manage the system, or those persons directly responsible for gathering the information, the information submitted is, to the best of my knowledge and belief, true, accurate, and complete. I am aware that there are significant penalties for submitting false information, including the possibility of fine and imprisonment for knowing violations.

REV	DATE	DESCRIPTION	REFERENCES
0	03/25/09	PERMIT RENEWAL	31001–EA–111–2 REV. 0

PermaFix Northwest Richland, Inc

PERMAFIX NORTHWEST RICHLAND, INC.
2025 BATTELLE BLVD.
RICHLAND, WA

STABILIZATION
LOW CAPACITY MIXING
GENERAL ARRANGEMENT TT–02

DRAWN S.NORTON
ENGR
QA

SCALE: AS SHOWN | SHT: 2 OF 3

PERMAFIX–DWG–STB–GA–TT02–001 | REV 0

NOTES

SEE SHEET 1 FOR BILL OF MATERIALS

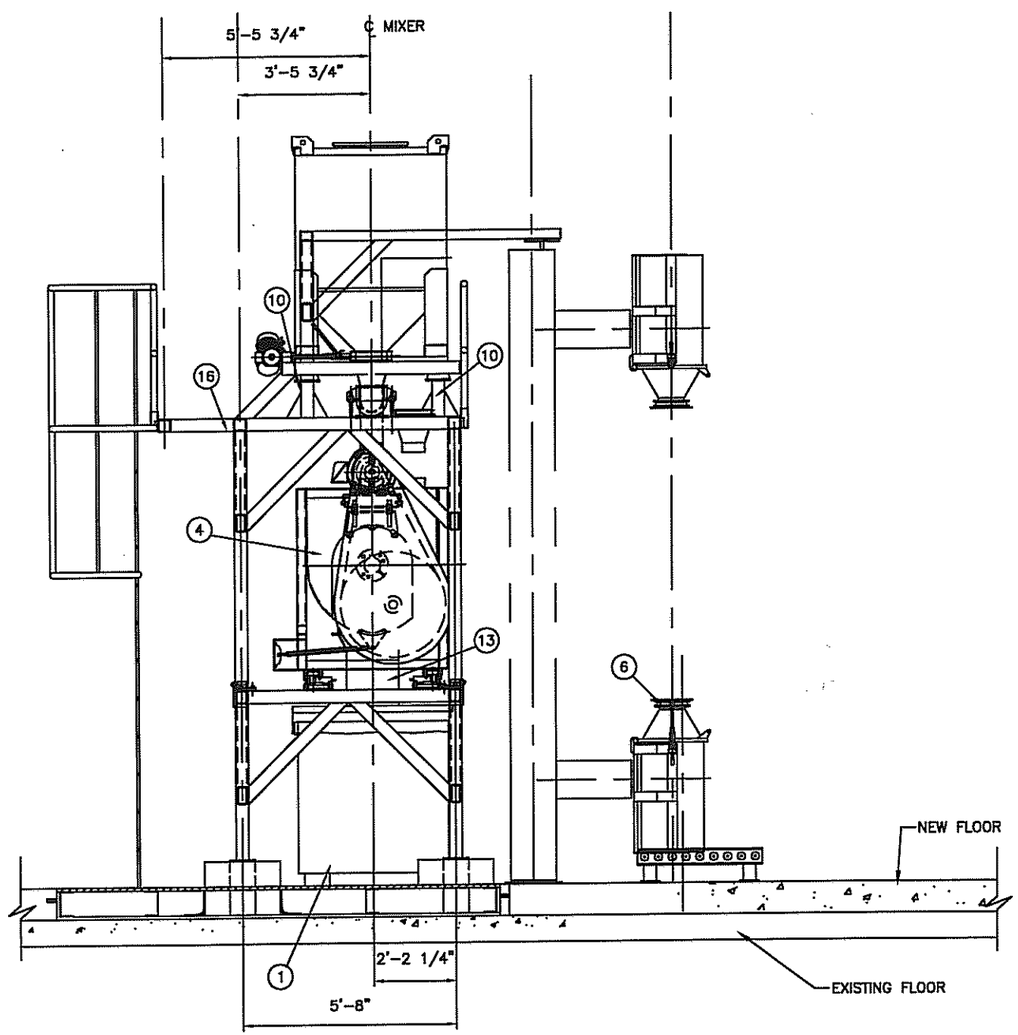

B 1/3 SECTION
SCALE: 1/4" = 1'-0"

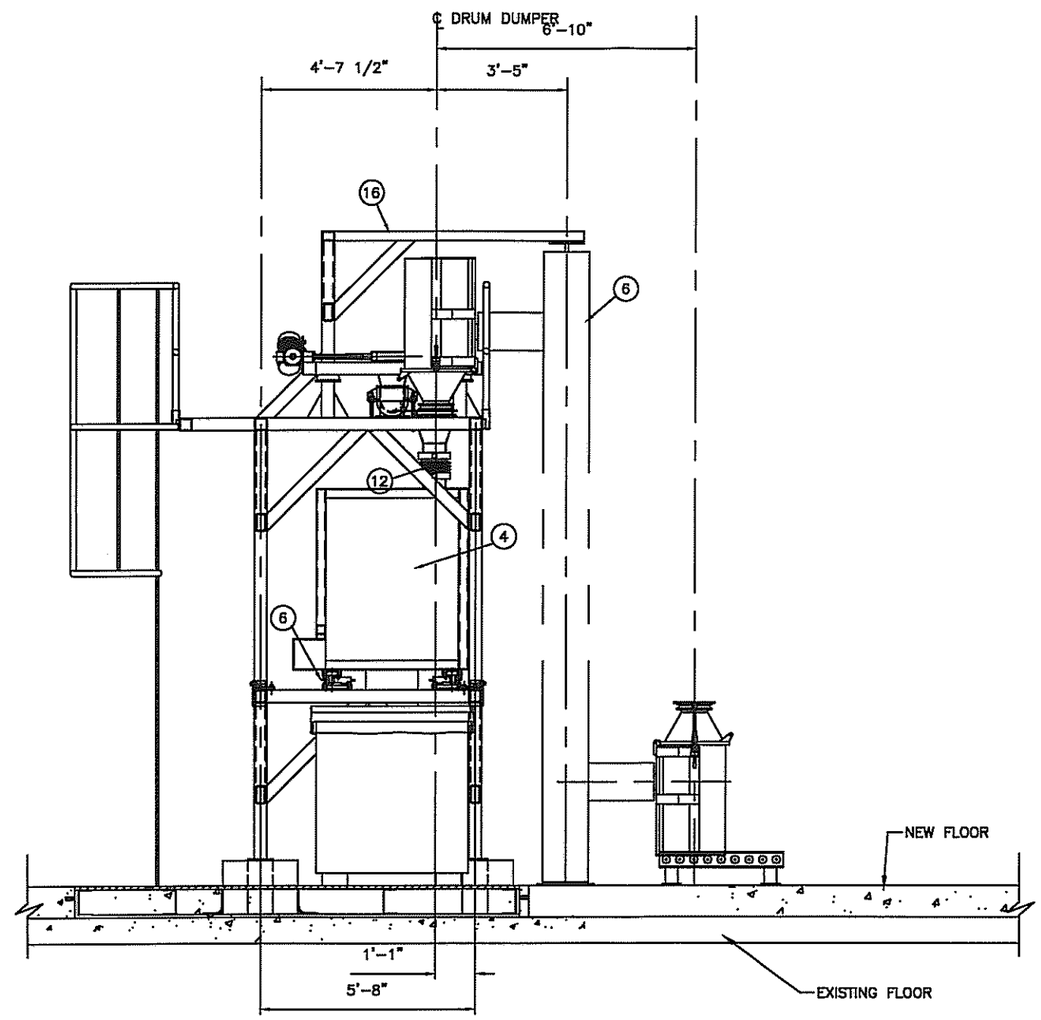

C 1/3 SECTION
SCALE: 1/4" = 1'-0"

PROFESSIONAL ENGINEERING CERTIFICATION

I certify under penalty of law that this document and all attachments were prepared under my direction or supervision in accordance with a system designed to assure that qualified personnel properly gather and evaluate the information submitted. Based upon my inquiry of the person or persons who manage the system, or those persons directly responsible for gathering the information, the information submitted is, to the best of my knowledge and belief, true, accurate, and complete. I am aware that there are significant penalties for submitting false information, including the possibility of fine and imprisonment for knowing violations.

REV	DATE	DESCRIPTION	REFERENCES
0	03/25/09	PERMIT RENEWAL	31001-EA-111-3 REV. 0

PermaFix
Northwest Richland, Inc

PERMAFIX NORTHWEST RICHLAND, INC.
2025 BATTELLE BLVD.
RICHLAND, WA

STABILIZATION
LOW CAPACITY MIXING
GENERAL ARRANGEMENT TT-02

DRAWN	S.NORTON
ENGR	
QA	

SCALE: AS SHOWN | SHT: 3 OF 3

PERMAFIX-DWG-STB-GA-TT02-001 | REV 0

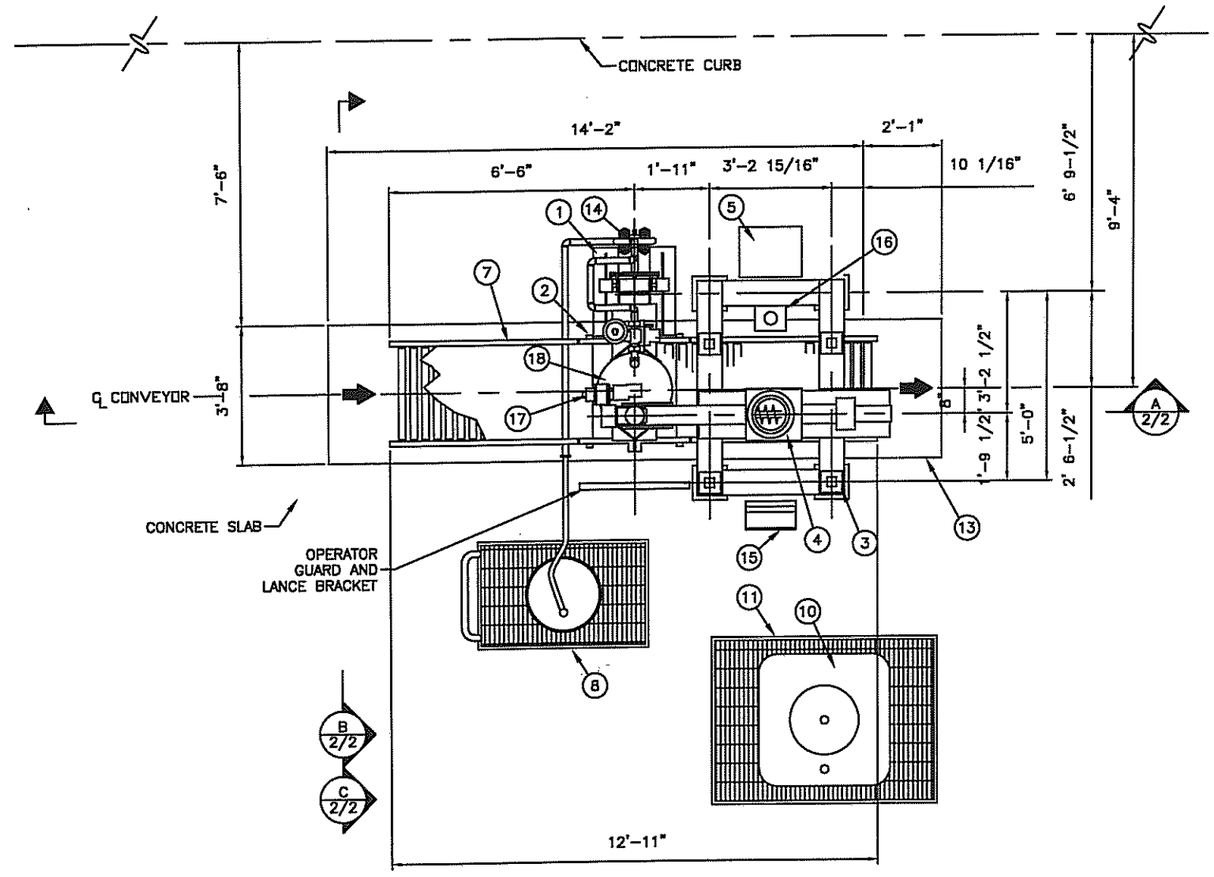

PLAN VIEW
SCALE: 1/4" = 1'-0"

BILL OF MATERIALS				
NO.	QTY.	NAME	TAG#	SPEC.
1	1	FILLING ASSEMBLY	–	31001–SP–TT03
2	1	WEIGH BRIDGE	–	31001–SP–TT03
3	1	REAGENT UNLOADER	–	31001–SP–TT03
4	1	REAGENT SCREW FEEDER	F–1306	31001–SP–TT03
5	1	CONTROL PANEL (PNEUMATIC)	–	31001–SP–TT03
6	1	GRAVITY OUT CONVEYOR	–	31001–SP–TT03
7	1	GRAVITY IN CONVEYOR	–	31001–SP–TT03
8	1	SECONDARY CONTAINMENT CART	–	31001–SP–TT03
9	1	REAGENT IBC	Z–1309	31001–SP–TT03
10	1	LIQUID IBC	–	31001–SP–TT03
11	1	LIQUID IBC SPILL CONTAINMENT	–	31001–SP–TT03
12	1	UNLOADER SUPPORT	–	31001–SP–TT03
13	1	CATCH PAN (19.8 CU FT)	–	31001–SP–TT03
14	1	AIR PUMP	PMP–1308	31001–SP–TT03
15	1	WEIGHT METER	–	31001–SP–TT03
16	1	HYDRAULIC PUMP	–	31001–SP–TT03
17	1	MIXER	MX–1301	31001–SP–TT03
18	1	DISPOSAL CONTAINER	C–1302	31001–SP–TT03
19	1	FUME HOOD	–	31001–SP–TT03

PROFESSIONAL ENGINEERING CERTIFICATION
I certify under penalty of law that this document and all attachments were prepared under my direction or supervision in accordance with a system designed to assure that qualified personnel properly gather and evaluate the information submitted. Based upon my inquiry of the person or persons who manage the system, or those persons directly responsible for gathering the information, the information submitted is, to the best of my knowledge and belief, true, accurate, and complete. I am aware that there are significant penalties for submitting false information, including the possibility of fine and imprisonment for knowing violations.

REV	DATE	DESCRIPTION	REFERENCES
0	03/26/09	PERMIT RENEWAL	31001–EA–112–1 REV. 0

PermaFix Northwest Richland, Inc

PERMAFIX NORTHWEST RICHLAND, INC.
2025 BATTELLE BLVD.
RICHLAND, WA

STABILIZATION
IN CONTAINER MIXING
GENERAL ARRANGEMENT TT–03

DRAWN: S.NORTON
ENGR:
QA:
SCALE: AS SHOWN
SHT: 1 OF 2
PERMAFIX–DWG–STB–GA–TT03–001
REV 0

NOTES

1. SEE SHEET 1 FOR BILL OF MATERIALS
2. EQUIPMENT SHOWN HERE WILL BE SUPPLIED AS ASSEMBLED UNIT BY VELCON. SEE SPECIFICATION 31001-SP-TT03.
3. REAGENT IBC Z-1309 CONTAINER WILL BE SUPPLIED BY TOTE SYSTEM.

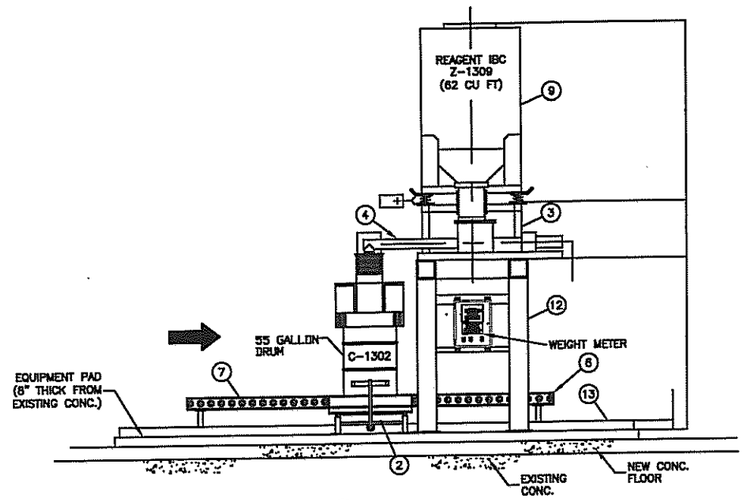

A 1/2 SECTION
SCALE: 3/16" = 1'-0"

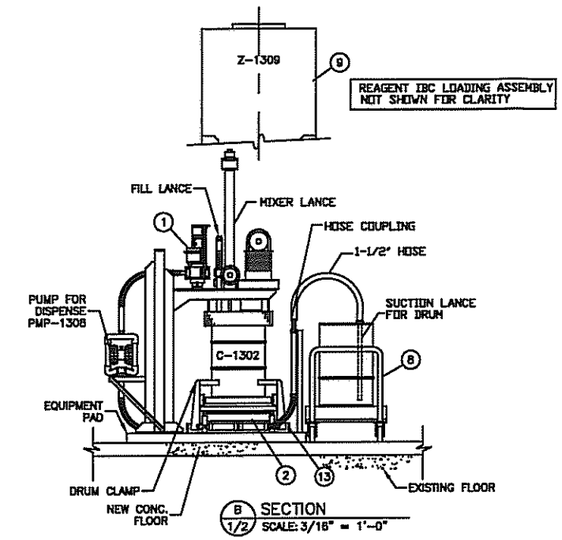

B 1/2 SECTION
SCALE: 3/16" = 1'-0"

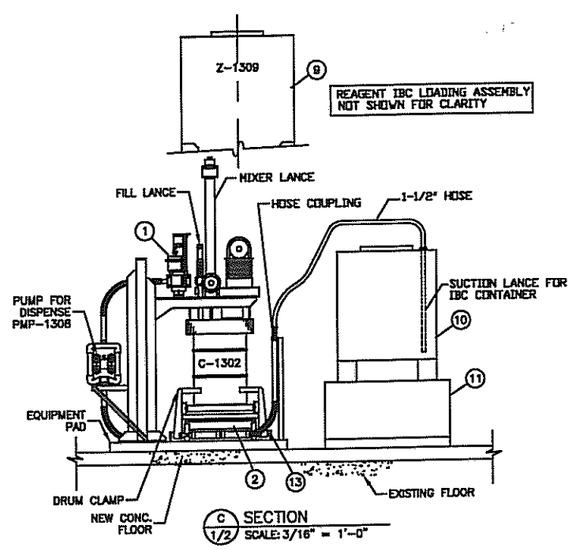

C 1/2 SECTION
SCALE: 3/16" = 1'-0"

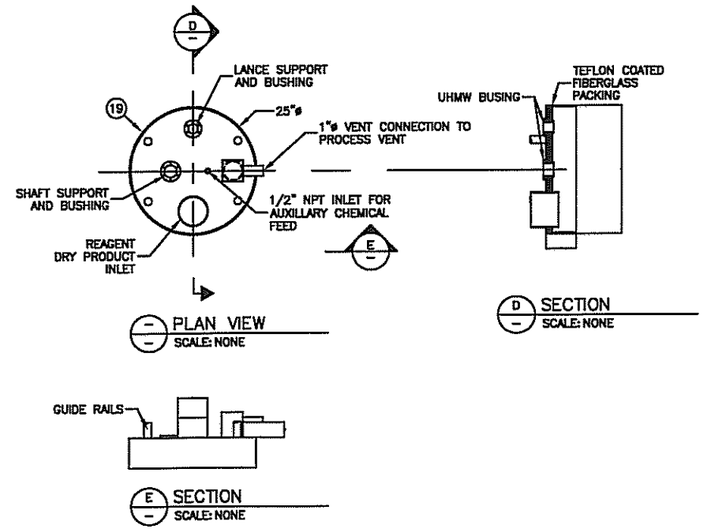

FUME HOOD LAYOUT
SCALE: NONE

PROFESSIONAL ENGINEERING CERTIFICATION

I certify under penalty of law that this document and all attachments were prepared under my direction or supervision in accordance with a system designed to assure that qualified personnel properly gather and evaluate the information submitted. Based upon my inquiry of the person or persons who manage the system, or those persons directly responsible for gathering the information, the information submitted is, to the best of my knowledge and belief, true, accurate, and complete. I am aware that there are significant penalties for submitting false information, including the possibility of fine and imprisonment for knowing violations.

REV	DATE	DESCRIPTION	REFERENCES
0	03/26/09	PERMIT RENEWAL	31001-EA-112-2 REV. 0

PermaFix
Northwest Richland, Inc

PERMAFIX NORTHWEST RICHLAND, INC.
2025 BATTELLE BLVD.
RICHLAND, WA

STABILIZATION
IN CONTAINER MIXING
GENERAL ARRANGEMENT TT-03

DRAWN	S.NORTON
ENGR	
QA	

SCALE: AS SHOWN | SHT: 2 OF 2

PERMAFIX-DWG-STB-GA-TT03-001 | REV 0

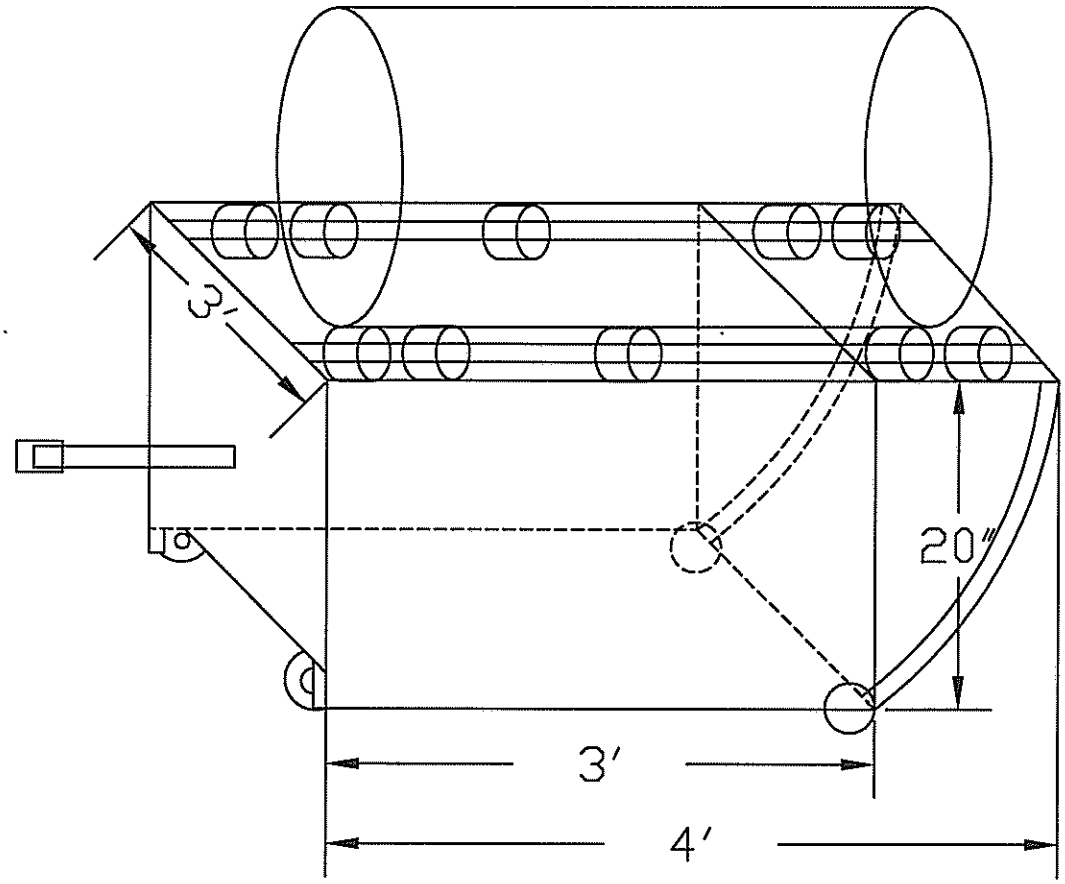

NOTE: DIMENSIONS ARE APPROXIMATE

TT-03 DRUM ROLLER
PERMA-FIX NORTHWEST RICHLAND, INC.

APPROX. SCALE: NONE

SCHREIBER & YONLEY ASSOCIATES
ENVIRONMENTAL ENGINEERS

CHECKED BY:	DRAWN BY:	DATE DRAWN:	PROJECT #:	DRAWING NO.:
LMF	BAH	03-26-09	PFINW070116-2	DWG-TT03-002

BILL OF MATERIALS				
NO.	QTY.	NAME	TAG#	SPEC.
1	1	ABRASIVE BLAST BOOTH	TT-05-ABB-0503	11600
2	1	ABRASIVE WASH PUMP	TT-05-PMP-0505	11600
3	1	LIQUID DRIP PAN	2-0506	11500
4	1	ABRASIVE RINSE PUMP	PMP-0507	11600
5	1	FILTER	FLT-0508	11600
6	1	MIST ELIMINATOR	HPE-5	–
7	1	FROZEN CO2 PELLETS	Z-0513	11600
8	1	AIR FILTER	FLT-0514	–
9	1	CO2 JET PUMP	PMP-0515	15100

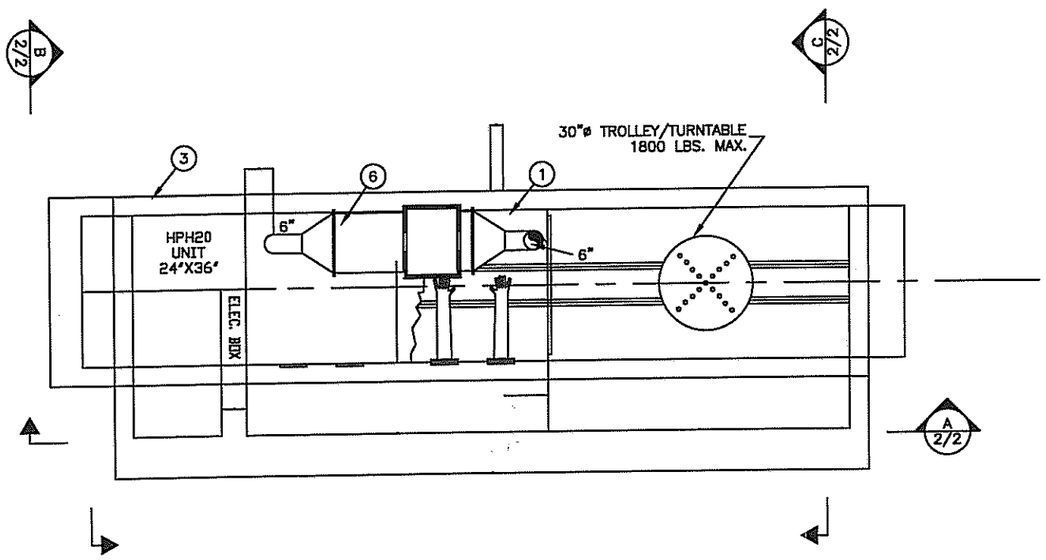

PLAN – PHYSICAL EXTRACTION SYSTEM
SCALE: 1/4" = 1'-0"

PROFESSIONAL ENGINEERING CERTIFICATION
I certify under penalty of law that this document and all attachments were prepared under my direction or supervision in accordance with a system designed to assure that qualified personnel properly gather and evaluate the information submitted. Based upon my inquiry of the person or persons who manage the system, or those persons directly responsible for gathering the information, the information submitted is, to the best of my knowledge and belief, true, accurate, and complete. I am aware that there are significant penalties for submitting false information, including the possibility of fine and imprisonment for knowing violations.

REV	DATE	DESCRIPTION	REFERENCES
0	03/26/09	PERMIT RENEWAL	31001-EA-114-1 REV. A

PermaFix
Northwest Richland, Inc

PERMAFIX NORTHWEST RICHLAND, INC.
2025 BATTELLE BLVD.
RICHLAND, WA

STABILIZATION
PHYSICAL EXTRACTION SYSTEM
GENERAL ARRANGEMENT TT-05

DRAWN S.NORTON
ENGR
QA

SCALE: AS SHOWN SHT: 1 OF 2
PERMAFIX-DWG-STB-GA-TT05-001 REV 0

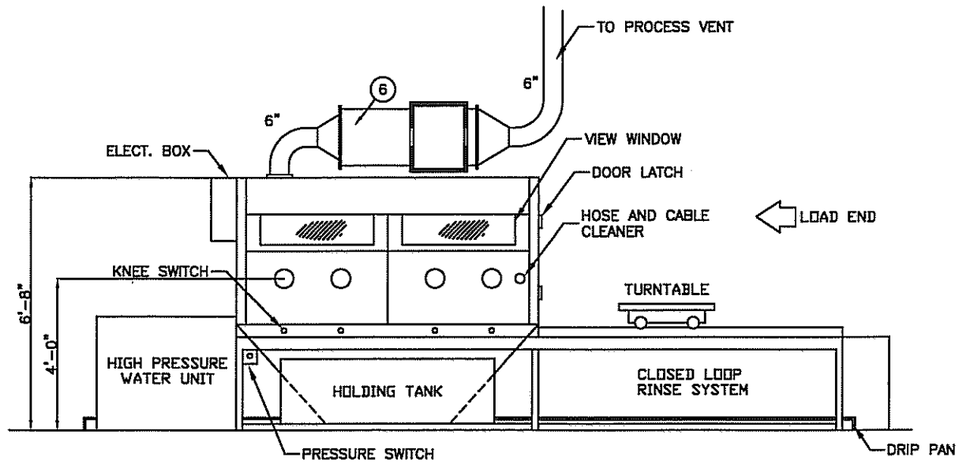

A 1/2 SECTION
SCALE: 1/4" = 1'-0"

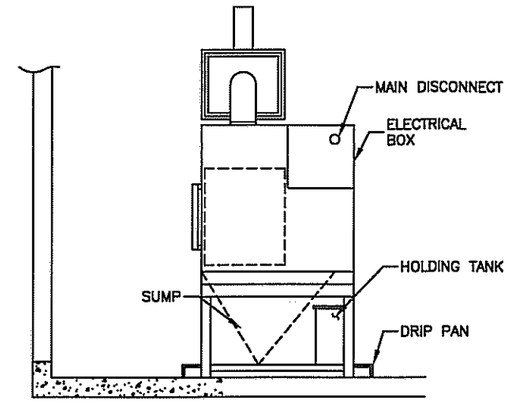

B 1/2 SECTION
SCALE: 1/4" = 1'-0"

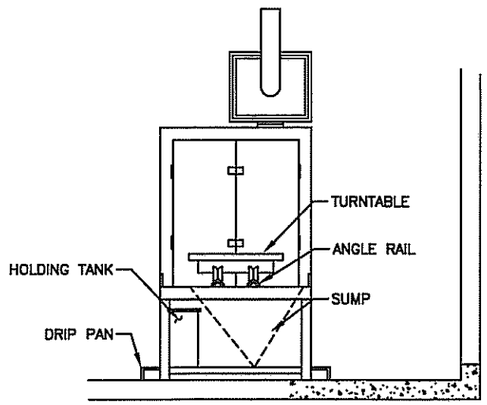

C 1/2 SECTION
SCALE: 1/4" = 1'-0"

PROFESSIONAL ENGINEERING CERTIFICATION
I certify under penalty of law that this document and all attachments were prepared under my direction or supervision in accordance with a system designed to assure that qualified personnel properly gather and evaluate the information submitted. Based upon my inquiry of the person or persons who manage the system, or those persons directly responsible for gathering the information, the information submitted is, to the best of my knowledge and belief, true, accurate, and complete. I am aware that there are significant penalties for submitting false information, including the possibility of fine and imprisonment for knowing violations.

REV	DATE	DESCRIPTION	REFERENCES
0	03/26/09	PERMIT RENEWAL	31001-EA-114-2 REV. A

PermaFix
Northwest Richland, Inc

PERMAFIX NORTHWEST RICHLAND, INC.
2025 BATTELLE BLVD.
RICHLAND, WA

STABILIZATION
PHYSICAL EXTRACTION SYSTEM
GENERAL ARRANGEMENT TT-05

DRAWN S.NORTON
ENGR
QA

SCALE: AS SHOWN | SHT: 2 OF 2

PERMAFIX-DWG-STB-GA-TT05-001 | REV 0

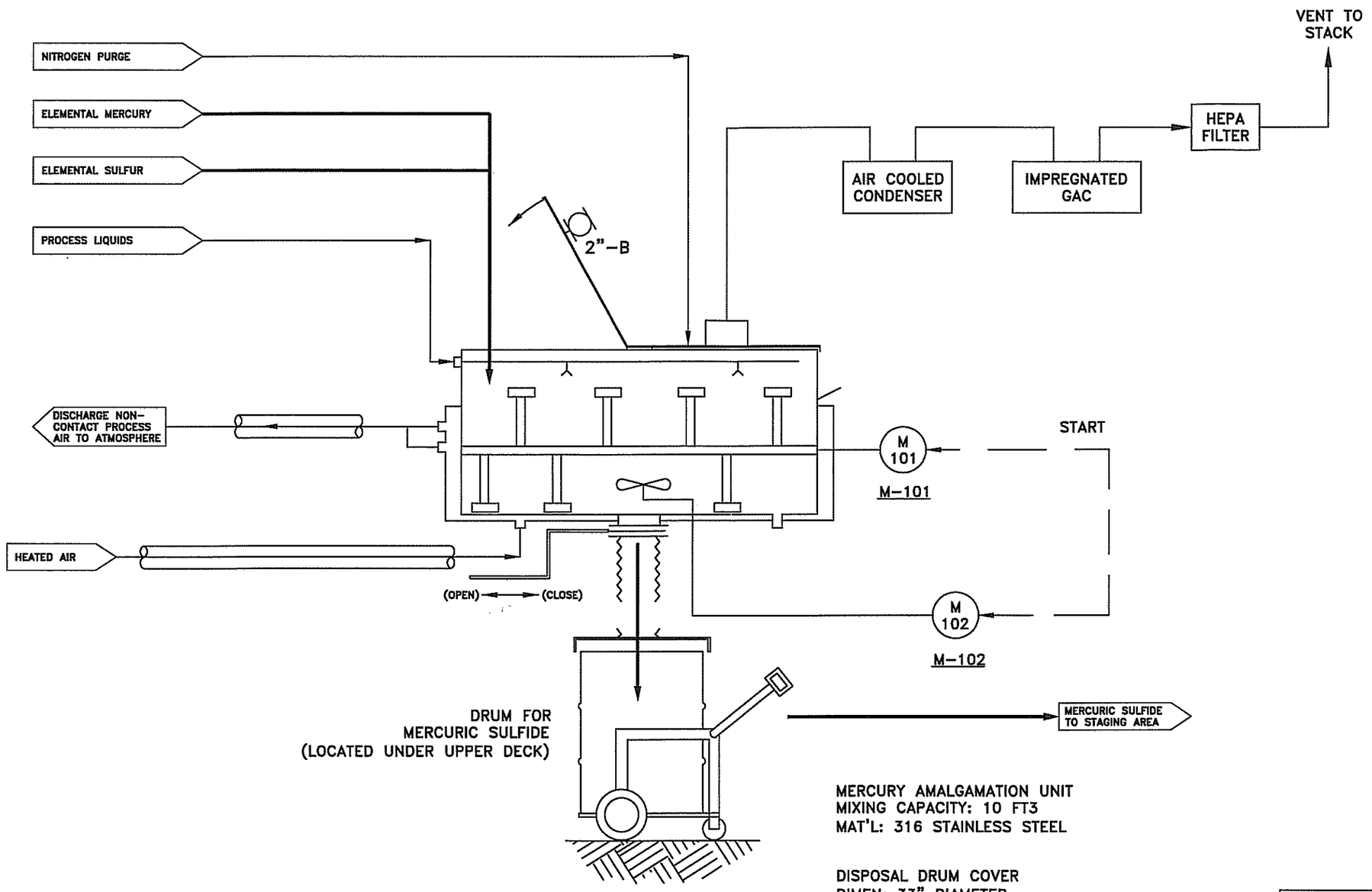

MERCURY AMALGAMATION UNIT
MIXING CAPACITY: 10 FT3
MAT'L: 316 STAINLESS STEEL

DISPOSAL DRUM COVER
DIMEN: 33" DIAMETER
MAT'L: 1/8" CARBON STEEL

ELECTRIC MOTORS:
M–101 MIXER MOTOR, 5 HP 480VAC, 3Ø
M–102 CHOPPER MOTOR, 10 HP, 480VAC, 3Ø

PROFESSIONAL ENGINEERING CERTIFICATION
I certify under penalty of law that this document and all attachments were prepared under my direction or supervision in accordance with a system designed to assure that qualified personnel properly gather and evaluate the information submitted. Based upon my inquiry of the person or persons who manage the system, or those persons directly responsible for gathering the information, the information submitted is, to the best of my knowledge and belief, true, accurate, and complete. I am aware that there are significant penalties for submitting false information, including the possibility of fine and imprisonment for knowing violations.

REV	DATE	DESCRIPTION	REFERENCES
0	03/26/09	PERMIT RENEWAL	M&EC DRAWING K–1010–PID–001

PermaFix Northwest Richland, Inc

PERMAFIX NORTHWEST RICHLAND, INC.
2025 BATTELLE BLVD.
RICHLAND, WA

STABILIZATION
MERCURY AMALGAMATION–BULK
GENERAL ARRANGEMENT TT–09

DRAWN: S.NORTON
ENGR:
QA:
SCALE: AS SHOWN
SHT: 1 OF 1
PERMAFIX–DWG–STB–GA–TT09–001
REV 0

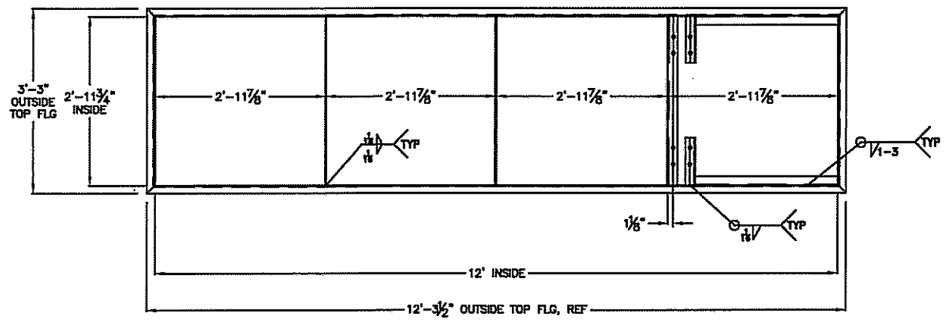

DEBRIS WASH SYSTEM PLAN VIEW

NOTES:

1. DETAILING, FABRICATION AND ERECTION OF STRUCTURAL STEEL TO CONFORM TO THE REQUIREMENTS OF THE AISC "SPECIFICATION FOR STRUCTURAL STEEL BUILDINGS", LATEST EDITION.
2. STRUCTURAL STEEL COMPONENTS WILL CONFORM TO:
   A. STRUCTURAL SHAPES - ASTM A276, TYPE 304
   B. PLATE OR HOT ROLLED FLAT BAR - ASTM A240, TYPE 304
   C. PIPE - ASTM A312, TYPE 304
3. WELDING TO CONFORM TO THE CURRENT SPECIFICATIONS OF THE AMERICAN WELDING SOCIETY, AND WILL COMPLY WITH ALL
   LOCAL LAWS AND ORDINANCES. WELDING ELECTRODES TO BE:
   A. TIG WELDING USE:
      1. 308L STAINLESS STEEL FOR 300 SERIES SS
      2. 312 STAINLESS STEEL FOR JOINING DISSIMILAR METALS (E.G., SS TO CS)
   B. ARC WELDING USE:
      1. E308L STAINLESS STEEL FOR 300 SERIES SS
      2. E309L STAINLESS STEEL FOR JOINING DISSIMILAR METALS
4. UNLESS OTHERWISE NOTED, MINIMUM FILLET WELD SIZE WILL BE 1/8" AND WELDS TO BE CONTINUOUS.
5. ALL WELDING TO BE BY AN AWS CERTIFIED WELDER WITH A CURRENT CERTIFICATE, WHICH WILL BE SUBMITTED FOR RECORD
   UPON REQUEST.
6. FABRICATION SHALL BE ADEQUATELY SHORED AND BRACED UNTIL ALL CONNECTIONS ARE COMPLETE.
7. ALL INTERIOR WELDS TO BE GROUND SMOOTH TO REDUCE PITS AND CREVICES TO TRAP CONTAMINANTS.

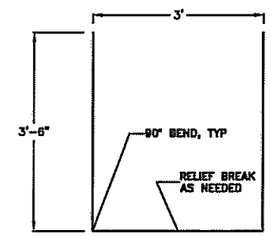

ITEM #1
QTY - 2

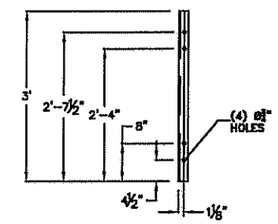

ITEM #6
QTY - 1

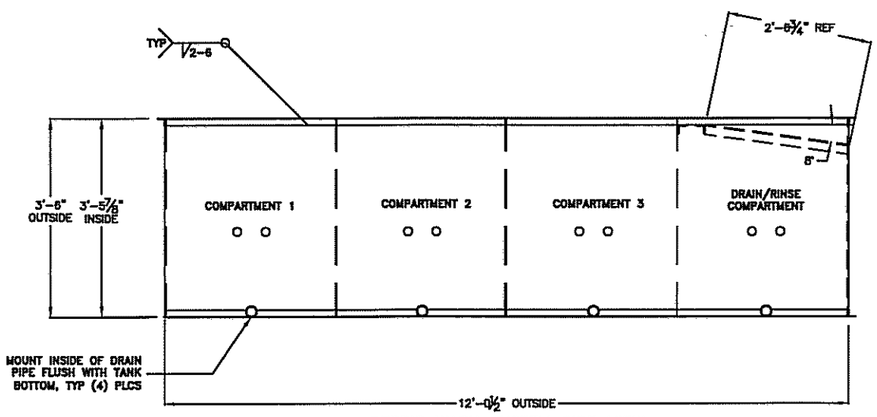

DEBRIS WASH SYSTEM SIDE VIEW

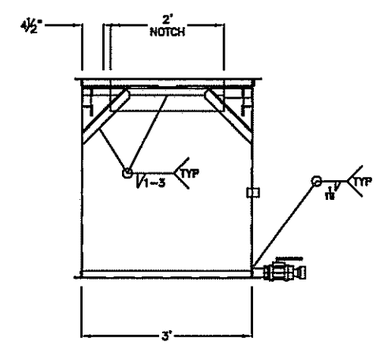

DEBRIS WASH SYSTEM END VIEW

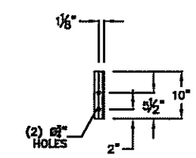

ITEM #7
QTY - 2

PROFESSIONAL ENGINEERING CERTIFICATION

I certify under penalty of law that this document and all attachments were prepared under my direction or supervision in accordance with a system designed to assure that qualified personnel properly gather and evaluate the information submitted. Based upon my inquiry of the person or persons who manage the system, or those persons directly responsible for gathering the information, the information submitted is, to the best of my knowledge and belief, true, accurate, and complete. I am aware that there are significant penalties for submitting false information, including the possibility of fine and imprisonment for knowing violations.

REV	DATE	DESCRIPTION	REFERENCES
0	03/26/09	PERMIT RENEWAL	M&EC DRAWING 2504-102

PermaFix® Northwest Richland, Inc

PERMAFIX NORTHWEST RICHLAND, INC.
2025 BATTELLE BLVD.
RICHLAND, WA

DRAWN	S.NORTON
ENGR	
QA	

STABILIZATION
DEBRIS WASHING
GENERAL ARRANGEMENT TT-10

SCALE: AS SHOWN | SHT: 1 OF 3

PERMAFIX-DWG-STB-GA-TT10-001 | REV 0

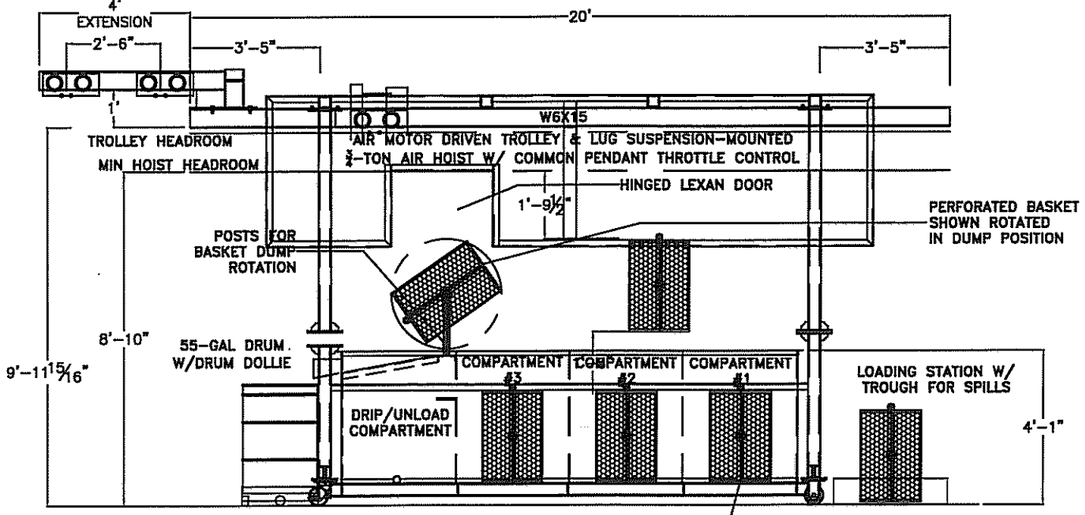

ELEVATION VIEW (A)
DEBRIS WASH ARRANGEMENT

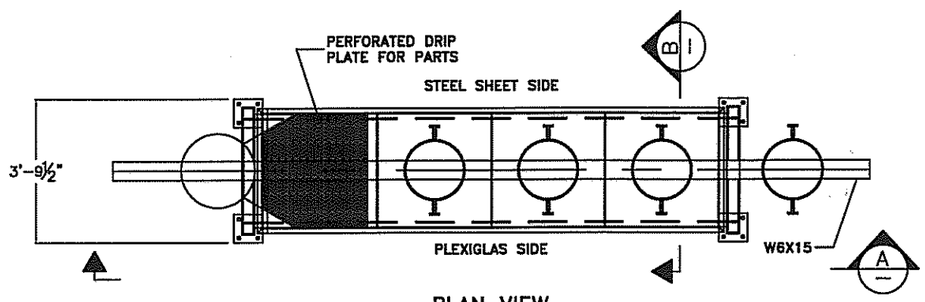

PLAN VIEW
DEBRIS WASH ARRANGEMENT

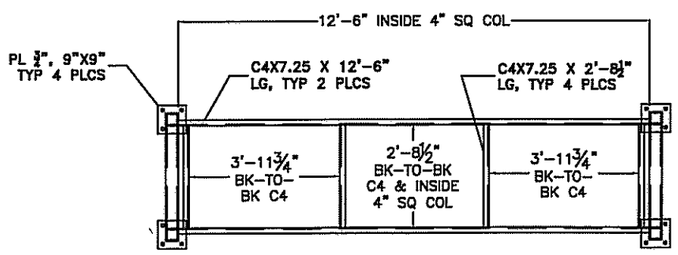

PLAN VIEW
SUPPORT FRAME

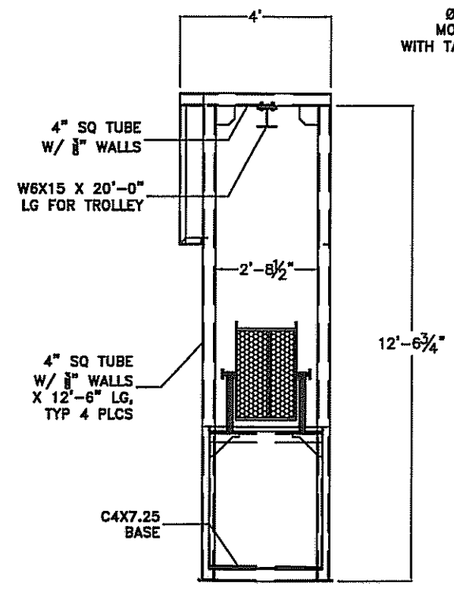

SECTION (B)

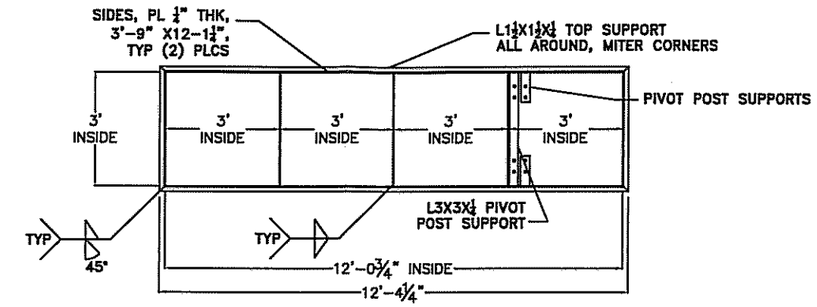

PLAN VIEW

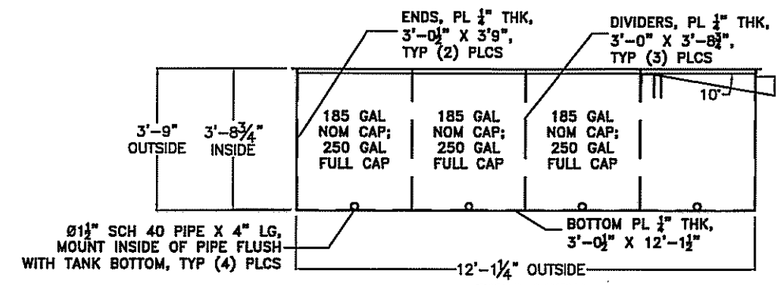

SIDE VIEW

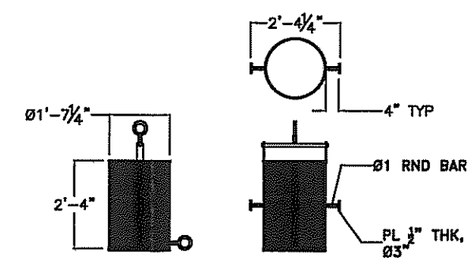

DEBRIS BASKET
W/TRUNNIONS

PROFESSIONAL ENGINEERING CERTIFICATION
I certify under penalty of law that this document and all attachments were prepared under my direction or supervision in accordance with a system designed to assure that qualified personnel properly gather and evaluate the information submitted. Based upon my inquiry of the person or persons who manage the system, or those persons directly responsible for gathering the information, the information submitted is, to the best of my knowledge and belief, true, accurate, and complete. I am aware that there are significant penalties for submitting false information, including the possibility of fine and imprisonment for knowing violations.

REV	DATE	DESCRIPTION	REFERENCES
0	03/26/09	PERMIT RENEWAL	M&EC DRAWING 2504-101R2F

PermaFix Northwest Richland, Inc

PERMAFIX NORTHWEST RICHLAND, INC.
2025 BATTELLE BLVD.
RICHLAND, WA

DRAWN	S.NORTON
ENGR	
QA	

STABILIZATION
DEBRIS WASHING
GENERAL ARRANGEMENT TT-10

SCALE: AS SHOWN | SHT: 2 OF 3

PERMAFIX-DWG-STB-GA-TT10-001 | REV 0

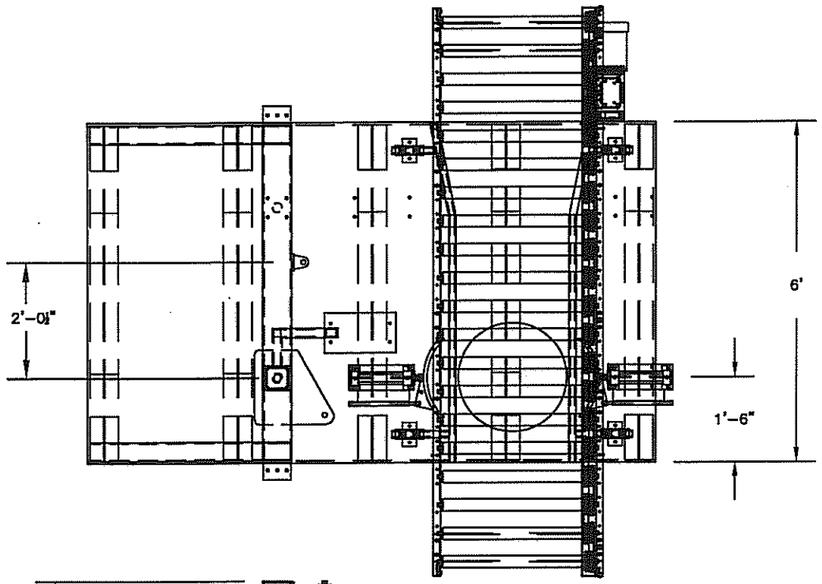

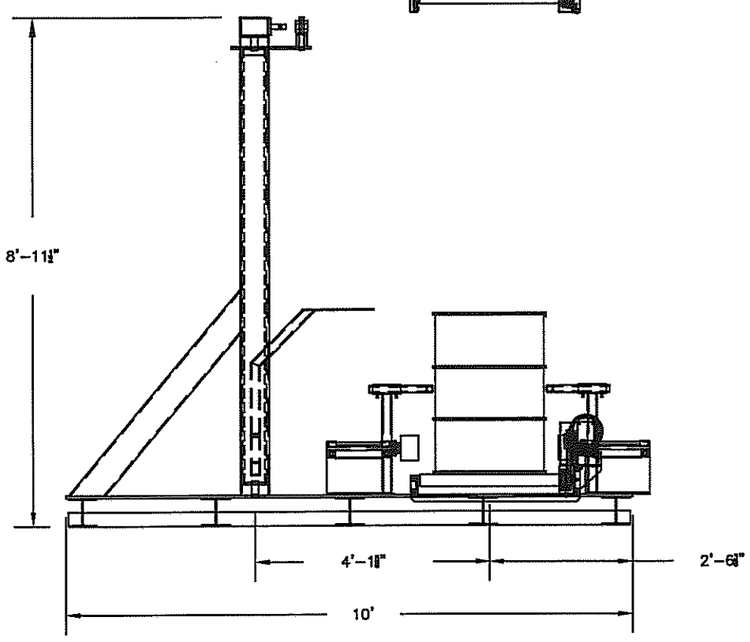

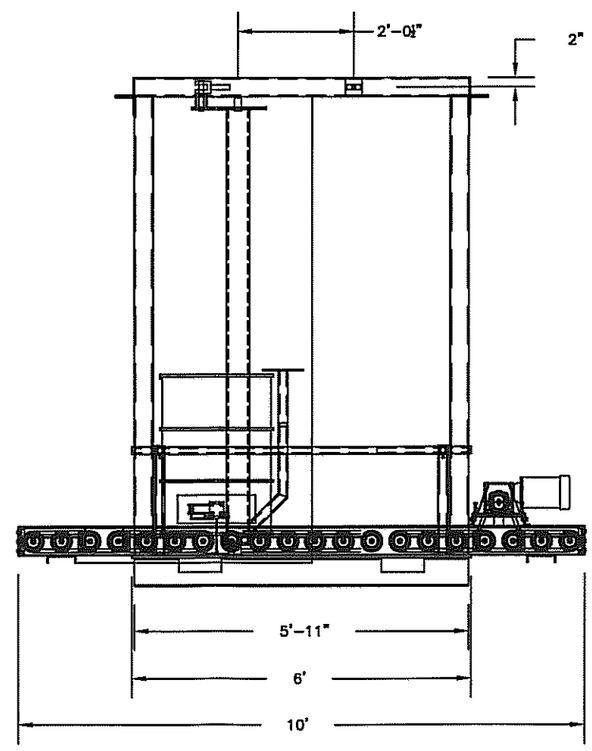

Lift Cylinder
Bailey Chief TC 3000 psi
3-1/2" Bore
1-1/2" Rod
Port Size SAE 8
36 Stroke
Bailey # 214-388
Retracted 46-1/4"
Extended 82-1/4"

Pivot & In/Out Cylinder
Bailey Chief TC 3000 psi
2" Bore
1-1/8" Rod
Port Size SAE 8
12 Stroke
Bailey # 214-305
Retracted 22-1/4"
Extended 34-1/4"

PROFESSIONAL ENGINEERING CERTIFICATION
I certify under penalty of law that this document and all attachments were prepared under my direction or supervision in accordance with a system designed to assure that qualified personnel properly gather and evaluate the information submitted. Based upon my inquiry of the person or persons who manage the system, or those persons directly responsible for gathering the information, the information submitted is, to the best of my knowledge and belief, true, accurate, and complete. I am aware that there are significant penalties for submitting false information, including the possibility of fine and imprisonment for knowing violations.

REV	DATE	DESCRIPTION	REFERENCES
0	03/26/09	PERMIT RENEWAL	M&EC DRAWING 2502-199

PermaFix Northwest Richland, Inc

PERMAFIX NORTHWEST RICHLAND, INC.
2025 BATTELLE BLVD.
RICHLAND, WA

STABILIZATION
DEBRIS WASHING
GENERAL ARRANGEMENT TT-10

DRAWN S.NORTON
ENGR
QA

SCALE: AS SHOWN | SHT: 3 OF 3

PERMAFIX-DWG-STB-GA-TT10-001 | REV 0

Dwg version 11/30/10

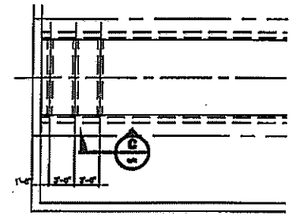

DETAIL 1
DRAINAGE ARRANGEMENT

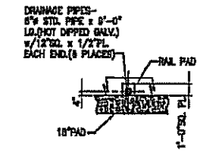

SECTION C

CONTAINMENT CALCULATIONS

CONTAINMENT REQUIRED = 12,000 gal

25-YEAR, 24-HOUR RAIN FALL EVENT: 2in

CONTAINMENT PRECIPITATION: 90ft X 90ft X 2in = 1,350 cu.ft
or 10,099 gal

RAIL TIE SUPPORT VOLUME: (9ft X 90ft X 7in) X 16 SUPs. = 472.5 cu.ft
or 3,535 gal

FORK-LIFT TIRE VOLUME PER TIRE : 3ft X 1.5ft X 6in = 2.25 cu.ft
or 13.5 cu.ft for 8 tires = 101 gal

TRUCK TIRE VOLUME PER TIRE : 3.5ft X 1.5ft X 6in = 2.4 cu.ft
or 43.2 cu.ft for 18 tires = 776 gal

RAMP INSIDE CONTAINMENT AREA VOLUME = 1/2 X (4in X 6ft X 30ft) = 25 cu.ft
or 187 gal

TOTAL CONTAINMENT REQ.: (10,099 + 3,535 + 101 + 187 + 12,000 + 776) gal
= 26,698 gal

CONTAINMENT VOLUME AVAILABLE: CONTAINMENT AREA A + CONTAINMENT AREA B
=(1/2 X (6in X 90ft X 90ft)) + (2in x 90ft x 90 ft)
=2700 cu.ft + 1,350 cu.ft
=4050 cu.ft or 30,298 gal

CONTAINMENT CHECK: 30,298 gal > 26,698 gal (CONTAINMENT ADEQUATE)

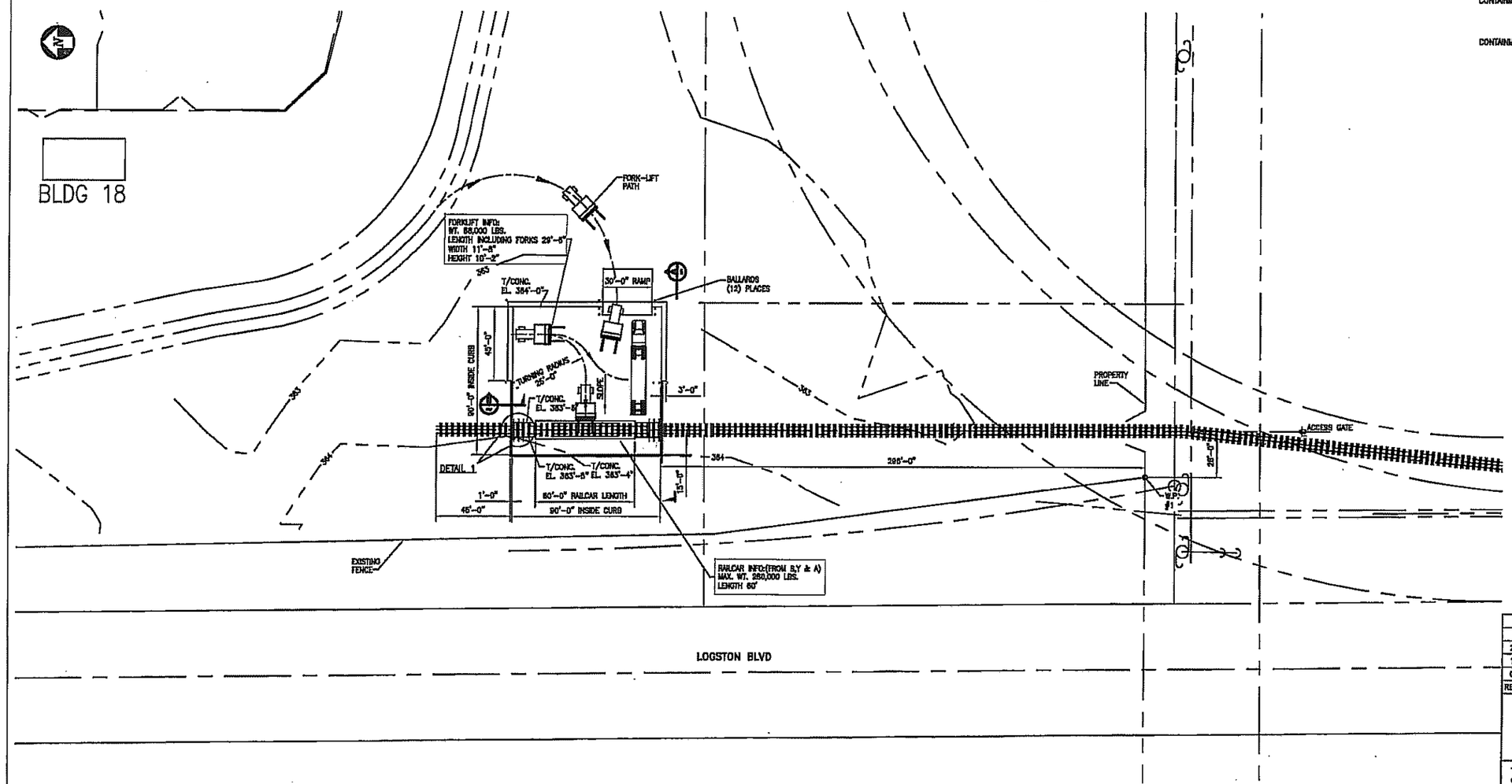

RAILCAR CONTAINMENT PAD PLAN

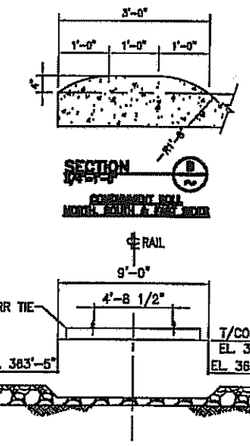

SUGGESTED RAIL ATTACHMENT

ISSUED FOR CONSTRUCTION
DATE: 35ep10 BY: BOUYAUGH

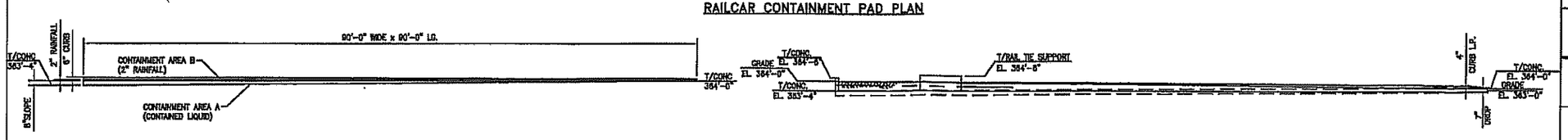

CONTAINMENT AREAS

SECTION A

REV.	DATE	DESCRIPTION	BY	CHKD.	APPR.
2	29NOV10	SEE REVISION CLOUDS	PJJ	TEB	TEB
1	30SEP10	REVISED ELEVATION	PJJ	TEB	TEB
0	35EP10	ISSUED FOR CONSTRUCTION	PJJ	TEB	TEB

PENTA
PENTA Engineering Co. LLC
10123 Corporate Square Drive, St. Louis, MO 63132-2905
www.penta.net; Phone: 314-878-0123; Fax: 314-878-0120

This drawing and the information contained herein is submitted confidentially and is the property of Penta Engineering Co. LLC. It may not be duplicated, disclosed, or utilized without written consent from Penta Engineering Co. LLC.

SCHREIBER YONLEY & ASSOC.
ELLISVILLE, MO

PERMA-FIX NORTHWEST FACILITY
RICHLAND, WA

RAILCAR CONTAINMENT PAD
GENERAL ARRANGEMENT & DETAILS

DESIGNED: SPENCER	DATE: 14JUL10	PENTA DRAWING NUMBER	REV.
DRAWN: JONES	DATE: 14JUL10	100707-M-100	2
CHECKED:	DATE:	CLIENT DRAWING NUMBER	
APPROVED:	SCALE: 1/32"=1'-0"		

C:\DOCUMENTS AND SETTINGS\STEVE.CONVERY\LOCAL SETTINGS\TEMPORARY INTERNET FILES\OLKB5\100707-M-100 REV 2SVG.DWG 11/30/2010 7:30:22 AM PDT\PJJ

DWG ~~[illegible]~~ 11/30/10

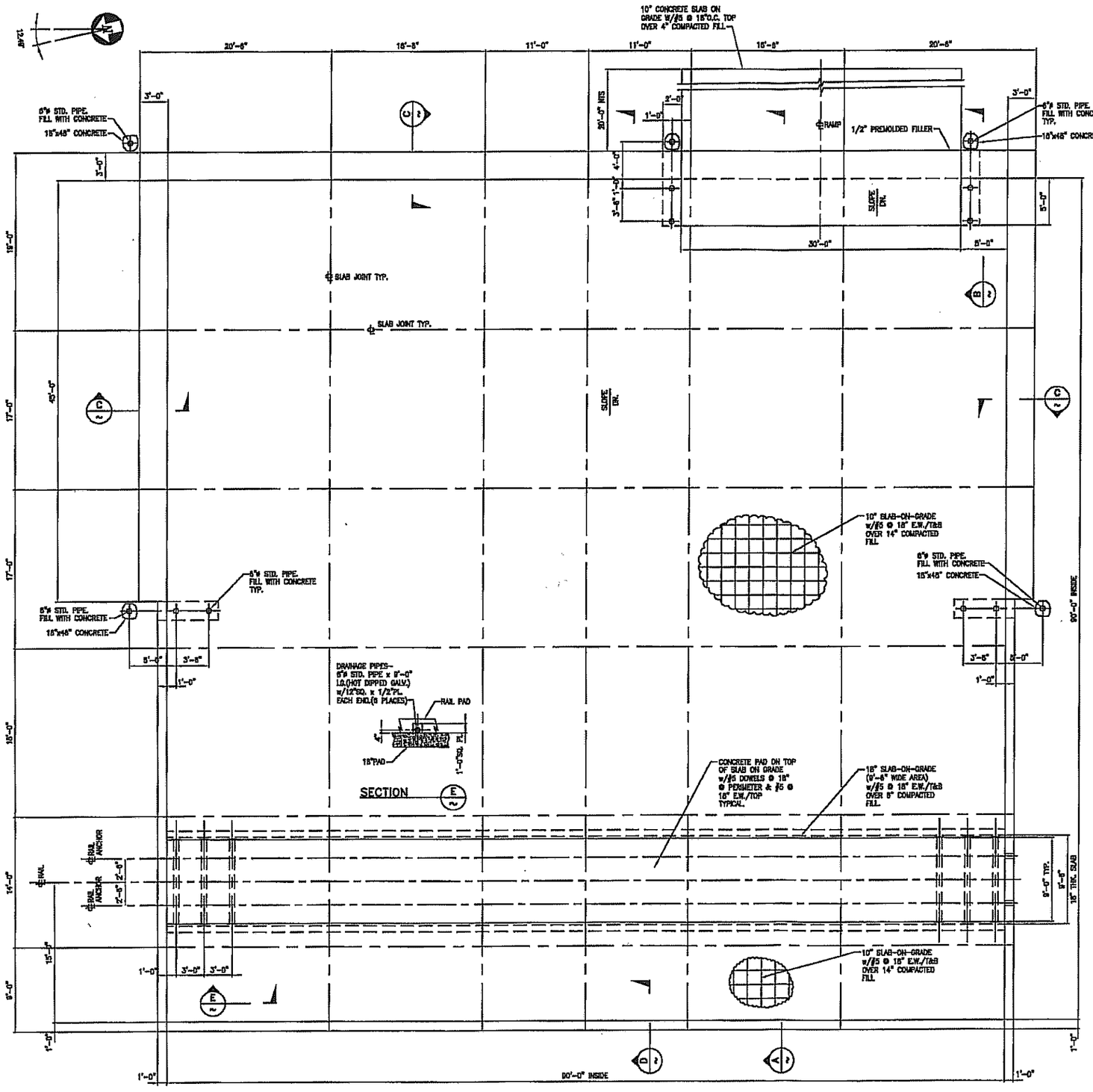

PLAN – RAILCAR CONTAINMENT PAD

NOTES:
1) CONCRETE SHALL HAVE AIR ENTRAINED f'c=4000 psi @ 28 DAYS.
2) REINFORCING SHALL BE ASTM A516, GRADE 60 REINFORCING.
3) CONCRETE COVER SHALL BE 3" AT THE BOTTOM OF SLAB AND 2" AT THE TOP OF SLAB.
4) CONCRETE FINISH SHALL BE BROOM FINISH.
5) CONCRETE SHALL BE PAINTED WITH AN EPOXY COATING, NSP SPECIALTY PRODUCTS, NSP_100 CONCRETE SEALER OR APPROVED EQUAL. CONCRETE CURING METHOD SHALL COMPATIBLE WITH EPOXY SPECIFICATIONS.
6) WATERSTOPS SHALL BE PLACED IN ALL CONSTRUCTION JOINTS. WATERSTOPS SHALL BE ASTM A570, BY GREENSTREAK, INSTALLED IN ACCORDANCE WITH MANUFACTURES SPECIFICATIONS OR EQUAL.
7) CONCRETE CONTROL JOINTS SHALL BE CUT OR PLACED PRIOR TO CONCRETE SHRINKAGE CRACK FORMATION. (LESS THAN 12 HOURS AFTER PLACING CONCRETE)
8) FROST DEPTH 24"
9) SOIL HAS 5ksf BEARING AT -2 FEET DEEP

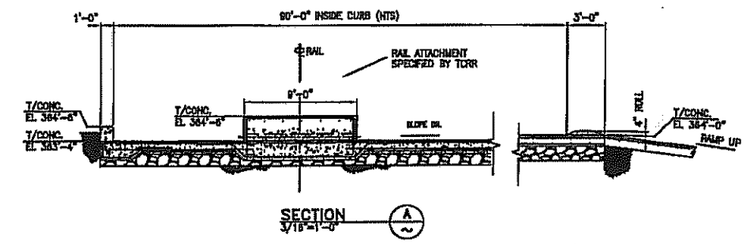

SECTION A 3/16"=1'-0"

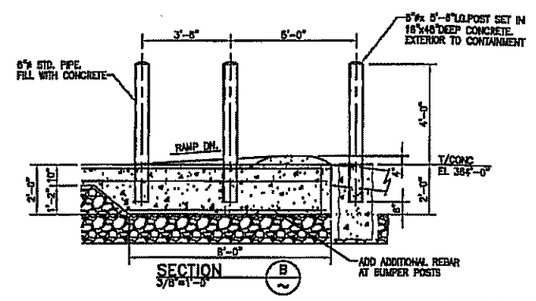

SECTION B 3/8"=1'-0"

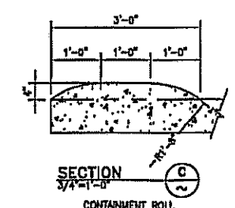

SECTION C 3/4"=1'-0"

CONTAINMENT ROLL NORTH, SOUTH & EAST SIDES

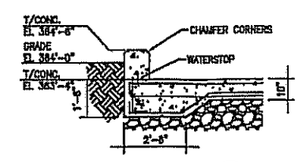

SECTION D 3/8"=1'-0"

ISSUED FOR CONSTRUCTION
DATE: 8Sep10 BY:

REV.	DATE	DESCRIPTION	BY	CHKD.	APPR.
2	29NOV10	SEE REVISION CLOUDS	PJJ		PAV
1	30SEP10	REVISED ELEVATION	PJJ		PAV
0	8SEP10	ISSUED FOR CONSTRUCTION	PJJ		PAV

PENTA
PENTA Engineering Co. LLC
10123 Corporate Square Drive, St. Louis, MO 63132-2905
www.penta.net: Phone: 314-878-0123; Fax: 314-878-0120

This drawing and the information contained herein is submitted confidentially and is the property of Penta Engineering Co. LLC. It may not be duplicated, disclosed, or utilized without written consent from Penta Engineering Co. LLC.

SCHREIBER YONLEY & ASSOC.
ELLISVILLE, MO

PERMA-FIX NORTHWEST FACILITY
RICHLAND, WA

RAILCAR CONTAINMENT PAD
GENERAL ARRANGEMENT & DETAILS

DESIGNED:	HAS	DATE:	22JUL10	PENTA DRAWING NUMBER	REV.
DRAWN:	JONES	DATE:	22JUL10	100707-S-100	2
CHECKED:		DATE:		CLIENT DRAWING NUMBER	
APPROVED:		SCALE: 1/32"=1'-0"			

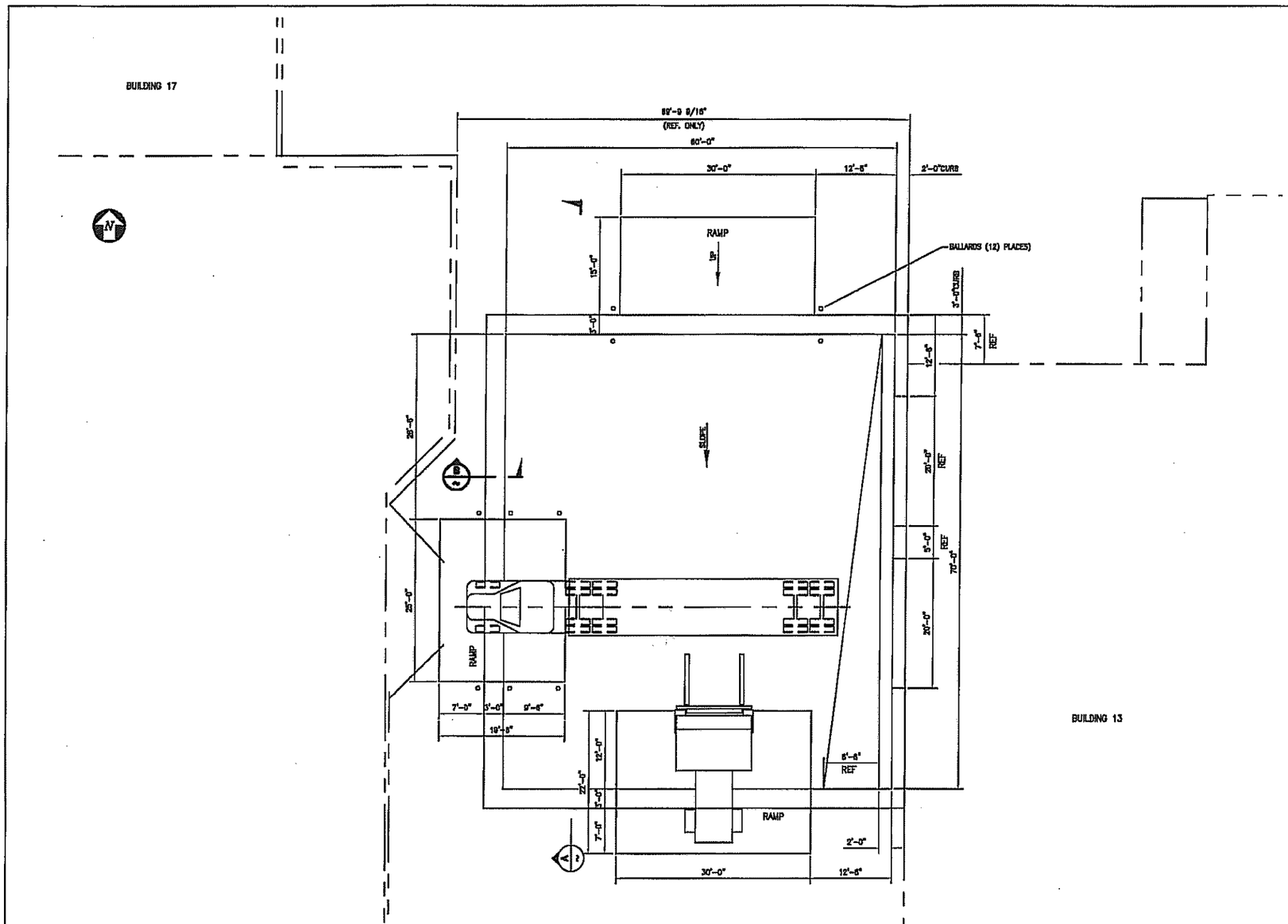

YARD CONTAINMENT PAD PLAN

CONTAINMENT CALCULATIONS

CONTAINMENT REQUIRED = 6,000 gal

25-YEAR, 24-HOUR RAIN FALL EVENT: 2in

CONTAINMENT PRECIPITATION: 60ft X 70ft X 2in = 700 cu.ft
or 5,237 gal

FORK-LIFT TIRE VOLUME PER TIRE : 3ft X 1.5ft X 6in = 2.25 cu.ft
or 13.5 cu.ft for 6 tires = 101 gal

TRUCK TIRE VOLUME PER TIRE : 3.5ft X 1.5ft X 6in = 2.4 cu.ft
or 43.2 cu.ft for 18 tires = 776 gal

NORTH RAMP INSIDE CONTAINMENT AREA VOLUME = 1/2 X (4in X 9.5ft X 30ft) = 47.5 cu.ft
or 355 gal

WEST RAMP INSIDE CONTAINMENT AREA VOLUME = 1/2 X (4in X 9.5ft X 25ft) = 39.6 cu.ft
or 297 gal

SOUTH RAMP INSIDE CONTAINMENT AREA VOLUME = 1/2 X (6in X 12ft X 30ft) = 90 cu.ft
or 674 gal

SLOPE TO BUILDING VOLUME = 1/2 [1/2 X (8.5ft X 0.5ft) X 70ft] = 74.4 cu.ft
or 577 gal

TOTAL CONTAINMENT REQ.: (5,237 + 101 + 776 + 6,000 + 355 + 297 + 674 + 577) gal
= 13,997 gal

CONTAINMENT VOLUME AVAILABLE: CONTAINMENT AREA A + CONTAINMENT AREA B
=(1/2 X (6in X 70ft X 60ft)) + (3in x 60ft x 60 ft)
=1,050 cu.ft + 1050 cu.ft
=2100 cu.ft or 15,710 gal

CONTAINMENT CHECK: 15,710gal > 13,997 gal (CONTAINMENT ADEQUATE)

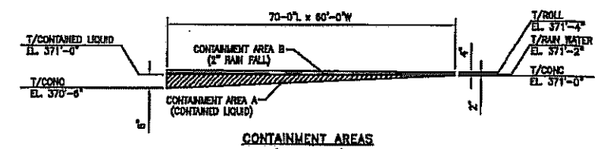

CONTAINMENT AREAS
(NOT TO SCALE)

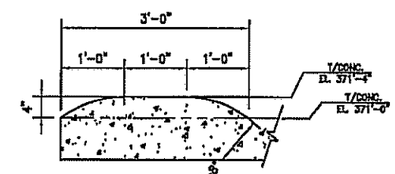

SECTION B
3/4"=1'-0"
CONTAINMENT ROLL
NORTH, SOUTH & EAST SIDES

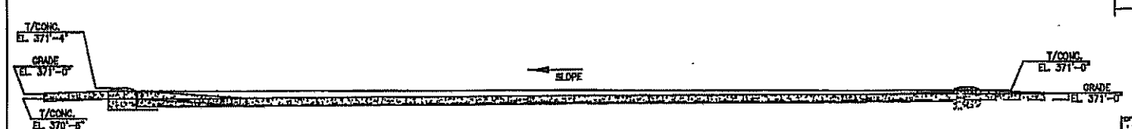

SECTION A
1/8"=1'-0"

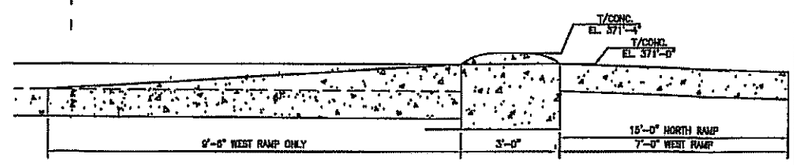

NORTH & WEST RAMP DETAILS

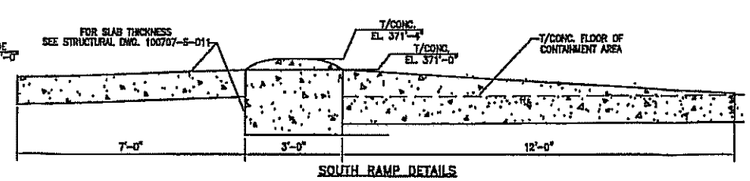

SOUTH RAMP DETAILS

REV.	DATE	DESCRIPTION	BY	CHKD.	APPR.
1	04MAR11	AS BUILT	WHG		
0	03SEP10	ISSUED FOR CONSTRUCTION	PAJ	TEB	TEB

PENTA
PENTA Engineering Co. LLC
10123 Corporate Square Drive, St. Louis, MO 63132-2905
www.penta.net; Phone: 314-878-0123; Fax: 314-878-0120

This drawing and the information contained herein is submitted confidentially and is the property of Penta Engineering Co. LLC. It may not be duplicated, disclosed, or utilized without written consent from Penta Engineering Co. LLC.

YARD PAD
GENERAL ARRANGEMENT

DESIGNED: JONES	DATE: 21JUL10	PENTA DRAWING NUMBER	REV.
DRAWN: JONES	DATE: 30JUL10	100707-M-101	1
CHECKED:	DATE:	CLIENT DRAWING NUMBER	
APPROVED:	SCALE: 1/8"=1'-0"		

C:\DOCUMENTS AND SETTINGS\ROCKER\LOCAL SETTINGS\TEMPORARY INTERNET FILES\OLK1A\100707-M-101 REV1.DWG 3/8/2011 10:48:23 AM WHGMER

Xref T:\PENTAProjects\PENTA US\PECL\Schreiber Yoniev\20100707\04. MEC\00. HELP\SYA Client Logo.dwg

NOTES:
1) CONCRETE SHALL HAVE AIR ENTRAINED f'c=4000 psi @ 28 DAYS.
2) REINFORCING SHALL BE ASTM A516, GRADE 60 REINFORCING.
3) CONCRETE COVER SHALL BE 3" AT THE BOTTOM OF SLAB AND 2" AT THE TOP OF SLAB.
4) CONCRETE FINISH SHALL BE BROOM FINISH.
5) CONCRETE SHALL BE PAINTED WITH AN EPOXY COATING, NSP SPECIALTY PRODUCTS, NSP_100 CONCRETE SEALER OR APPROVED EQUAL. CONCRETE CURING METHOD SHALL COMPATIBLE WITH EPOXY SPECIFICATIONS.
6) WATERSTOPS SHALL BE PLACED IN ALL CONSTRUCTION JOINTS. WATERSTOPS SHALL BE ASTM A370, BY GREENSTREAK, INSTALLED IN ACCORDANCE WITH MANUFACTURES SPECIFICATIONS OR EQUAL.
7) CONCRETE CONTROL JOINTS SHALL BE CUT OR PLACED PRIOR TO CONCRETE SHRINKAGE CRACK FORMATION. (LESS THAN 12 HOURS AFTER PLACING CONCRETE)
8) FROST DEPTH 24"
9) SOIL HAS 5ksi BEARING AT -2 FEET DEEP

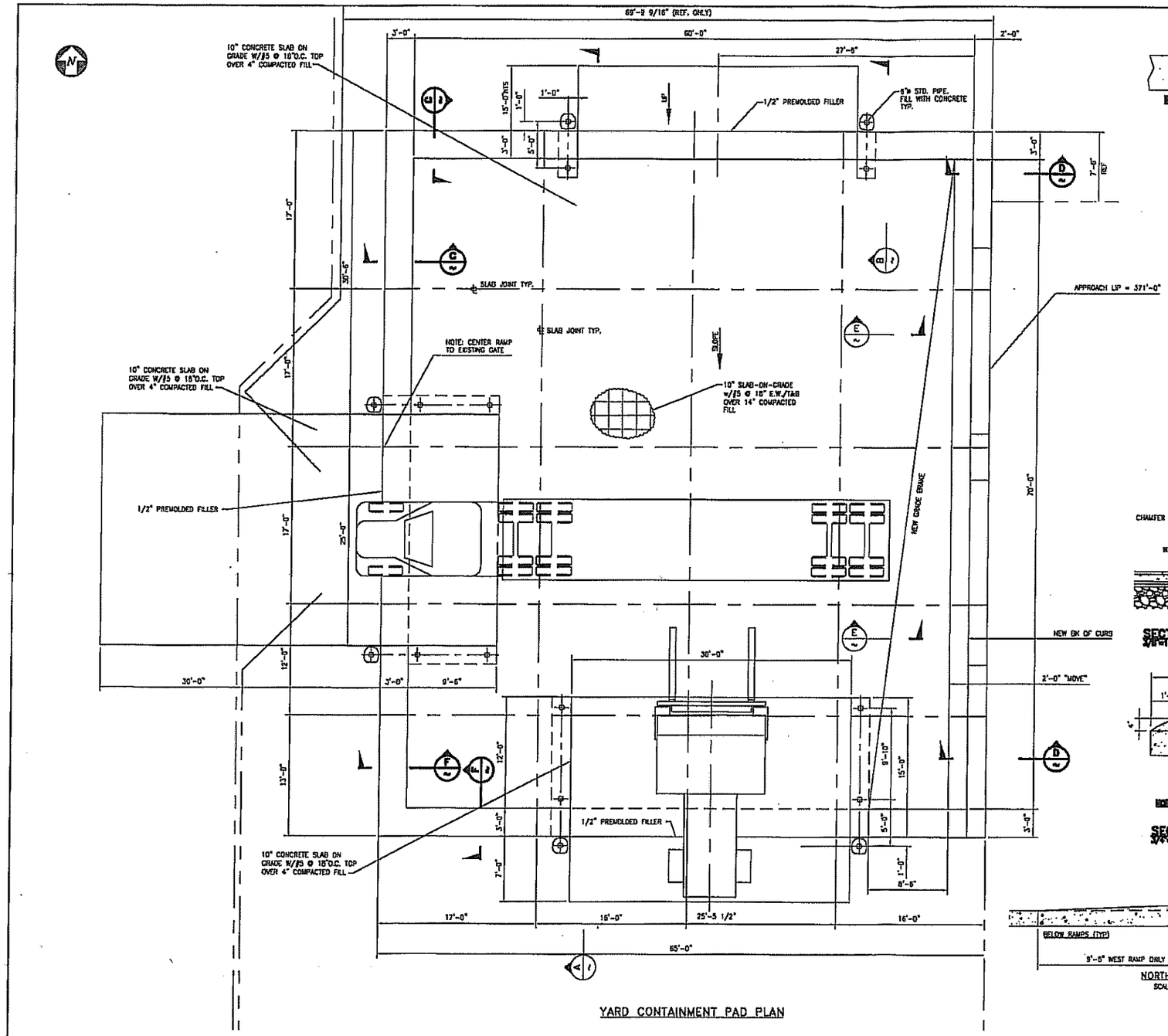

YARD CONTAINMENT PAD PLAN

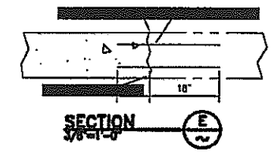

SECTION E

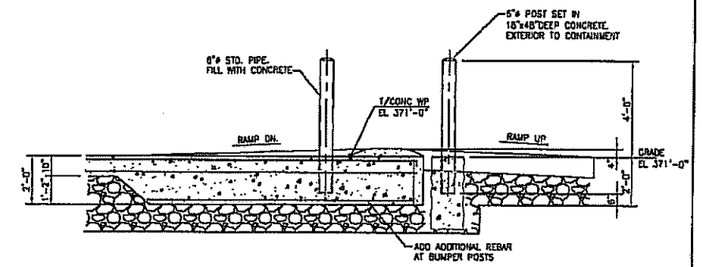

SECTION B

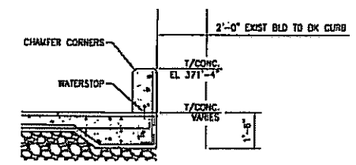

SECTION D

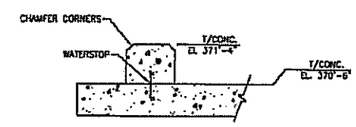

SECTION F

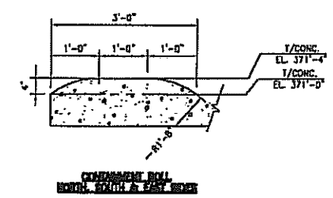

CONTAINMENT ROLL
NORTH, SOUTH & EAST SIDES

SECTION C

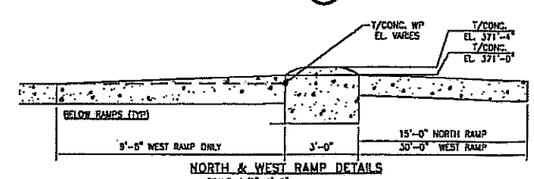

NORTH & WEST RAMP DETAILS
SCALE: 1/2"=1'-0"

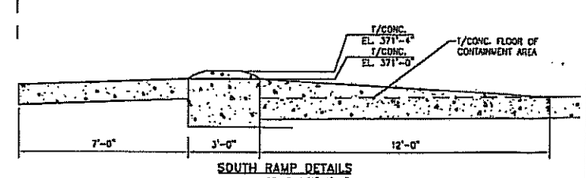

SOUTH RAMP DETAILS
SCALE: 1/2"=1'-0"

SECTION A

REV.	DATE	DESCRIPTION	BY	CHKD.	APPR.
2	8MAR11	AS BUILT	WHO		
1	28NOV10	SEE REVISION CLOUDS	FJJ		PAW
0	3SEP10	ISSUED FOR CONSTRUCTION	FJJ		PAW

PENTA
PENTA Engineering Co. LLC
10123 Corporate Square Drive, St. Louis, MO 63132-2905
www.penta.net; Phone: 314-678-0123; Fax: 314-678-0120

This drawing and the information contained herein is submitted confidentially and is the property of Penta Engineering Co. LLC. It may not be duplicated, disclosed, or utilized without written consent from Penta Engineering Co. LLC.

YARD PAD

GENERAL ARRANGEMENT & DETAILS

DESIGNED: JONES	DATE: 26JUL10	PENTA DRAWING NUMBER	REV.
DRAWN: JONES	DATE: 26JUL10	100707-S-101	2
CHECKED:	DATE:	CLIENT DRAWING NUMBER	
APPROVED:	SCALE: 3/16"=1'-0"		

Y:\AUTOCAD PROJECT FILES\2010 PROJECTS\2010-05 BYRN RAIL SPUR & YARD PAD\YARD STONE COVER\2004 VERSIONS\100707-S-101 REVLDWG 3/9/2011 1:44:32 PM WOLOVER

Xref T:\PENTAProjects\PENTA US\PECL\Schreiber Yanley\20100707\04. MEC\00. HELP\SYA Client Logo.dwg

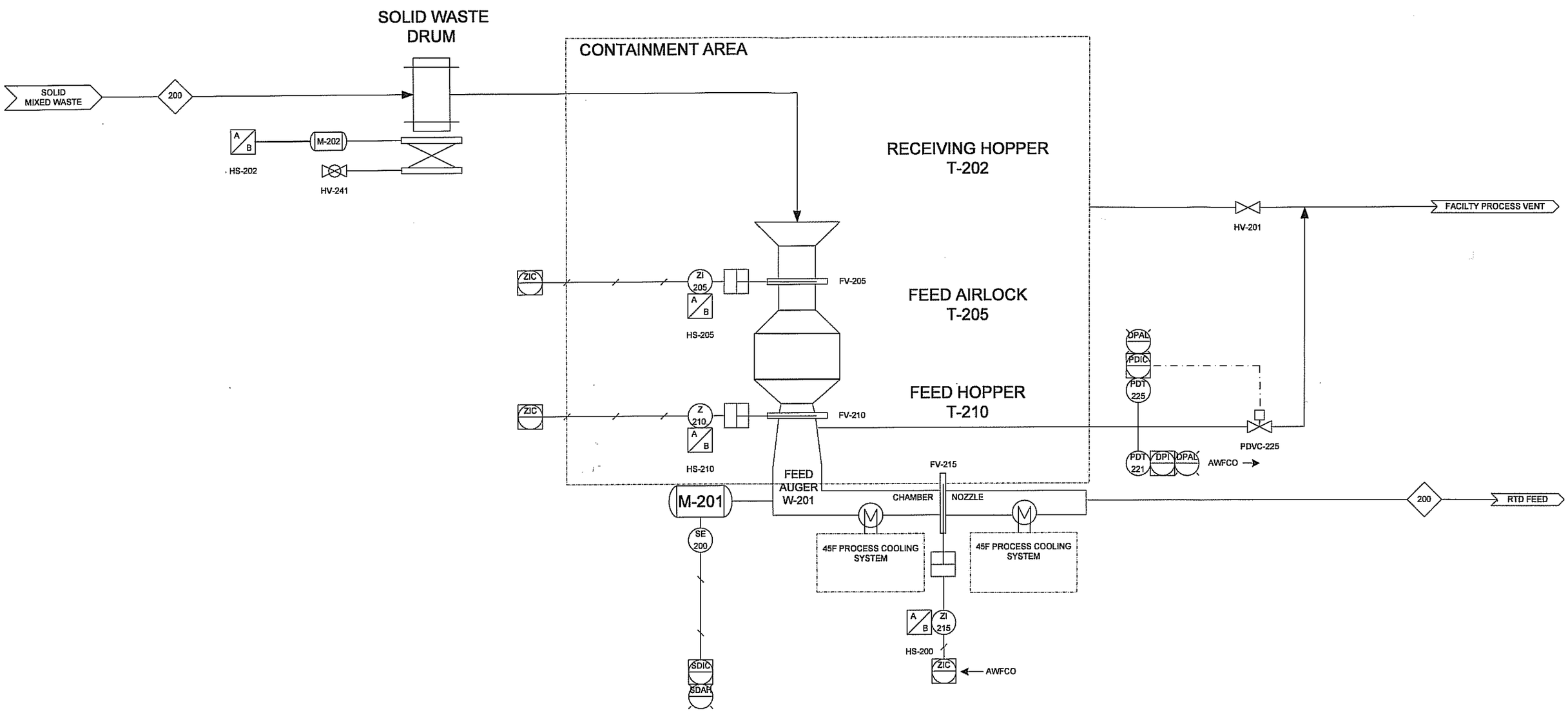

PermaFix® Northwest, Inc.

Title

RTD
FEED SYSEM
P&ID

Rev.	Description	By	Ops. Chk	Eng. App.	Date
0	PERMIT RENEWAL	SAC			

Revision History

Dwg. No.	Pages	Rev.
PERMA-FIX-MWT-RTD-PID-001a	1 OF 7	0

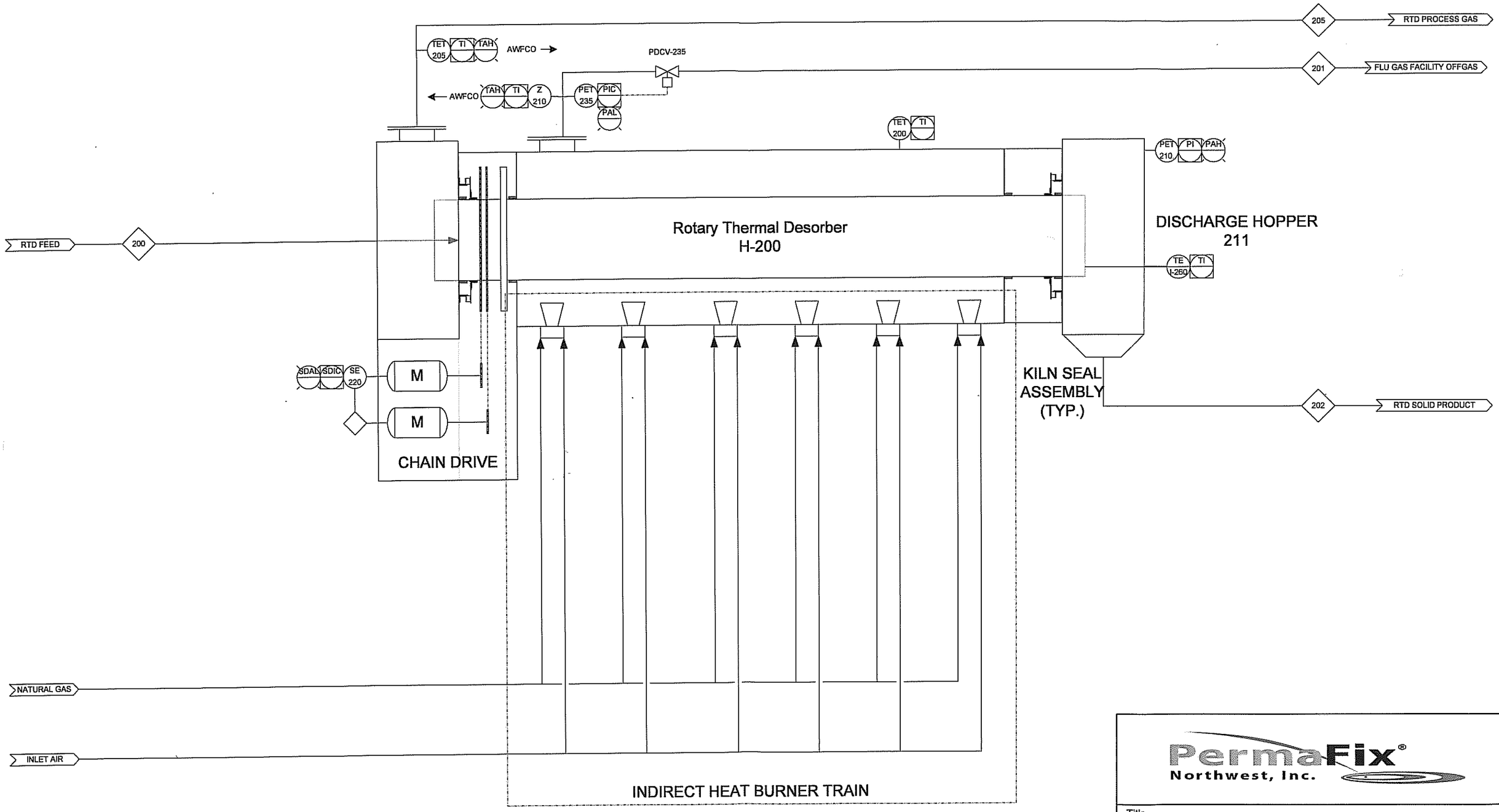

PermaFix® Northwest, Inc.

Title

RTD
KILN SYSTEM
P&ID

Rev.	Description	By	Ops. Chk	Eng. App.	Date
0	PERMIT RENEWAL	SAC			

Revision History

Dwg. No.	Pages	Rev.
PERMA-FIX-MWT-RTD-PID-001a	2 OF 7	0

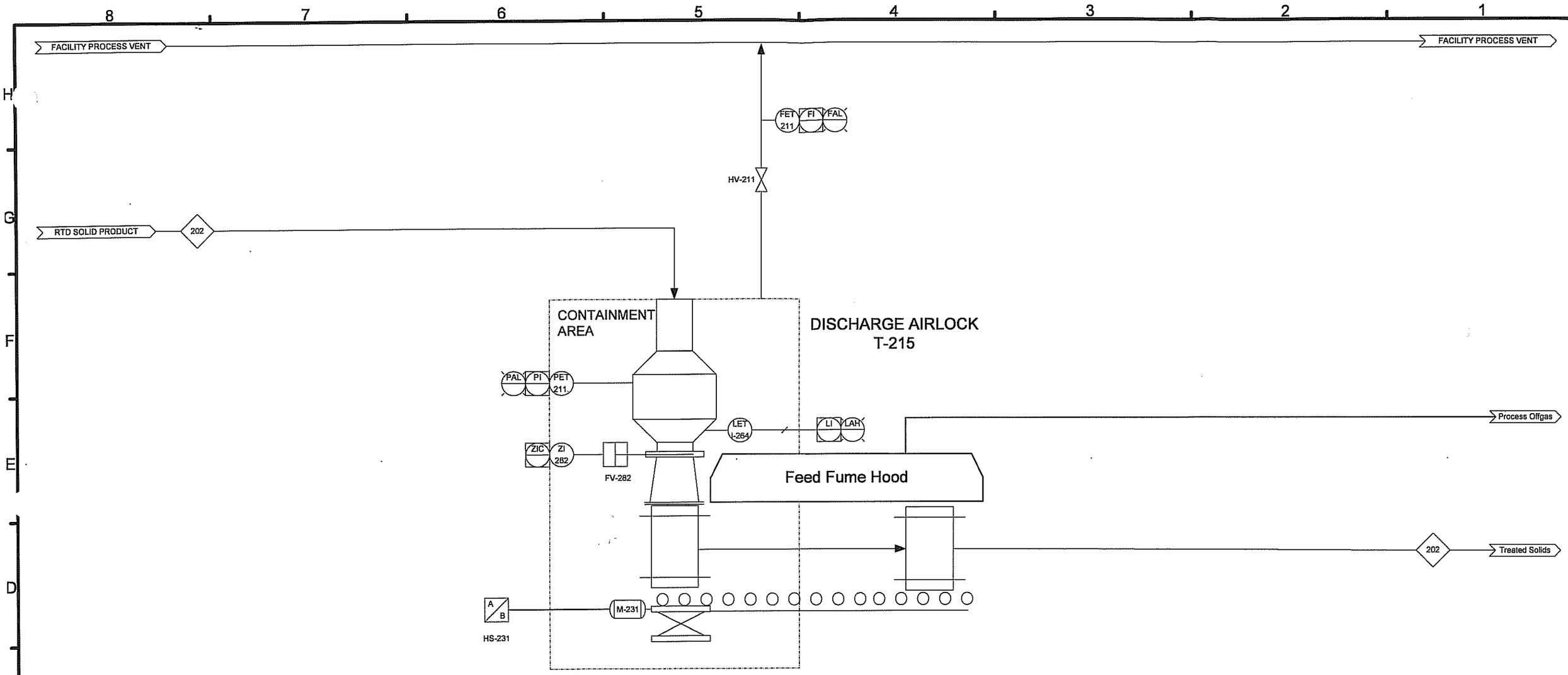

PermaFix® Northwest, Inc.

Title

RTD
DISCHARGE SYSTEM
P&ID

Rev.	Description	By	Ops. Chk	Eng. App.	Date
0	PERMIT RENEWAL	SAC			

Revision History

Dwg. No.	Pages	Rev.
PERMA-FIX-MWT-RTD-PID-001a	3 OF 7	0

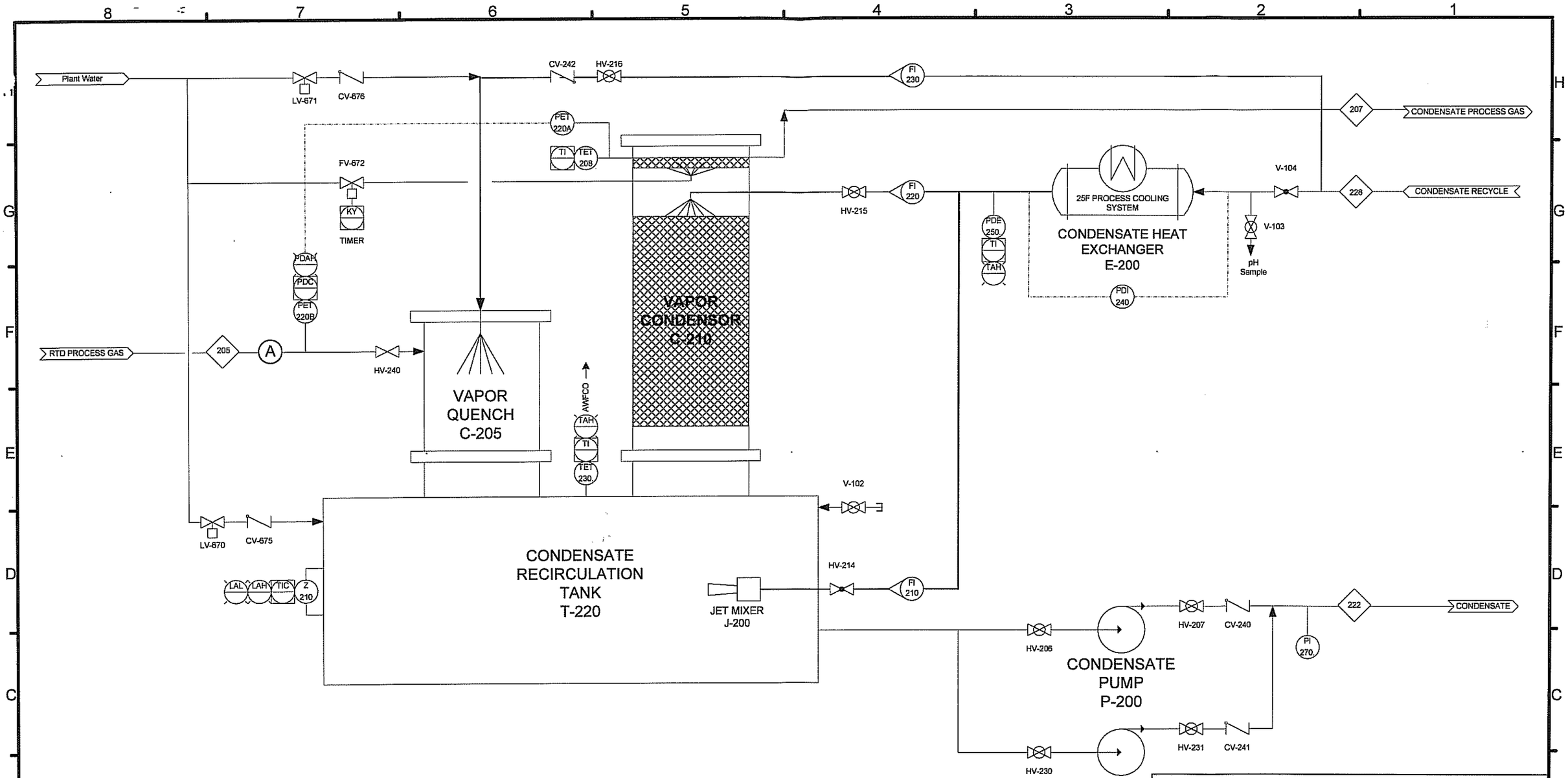

PermaFix® Northwest, Inc.

Title
RTD
PRIMARY OFFGAS QUENCH SYSEM
P&ID

Rev.	Description	By	Ops. Chk	Eng. App.	Date
0	PERMIT RENEWAL	SAC			

Revision History

Dwg. No.	Pages	Rev.
PERMA-FIX-MWT-RTD-PID-001a	4 OF 7	0

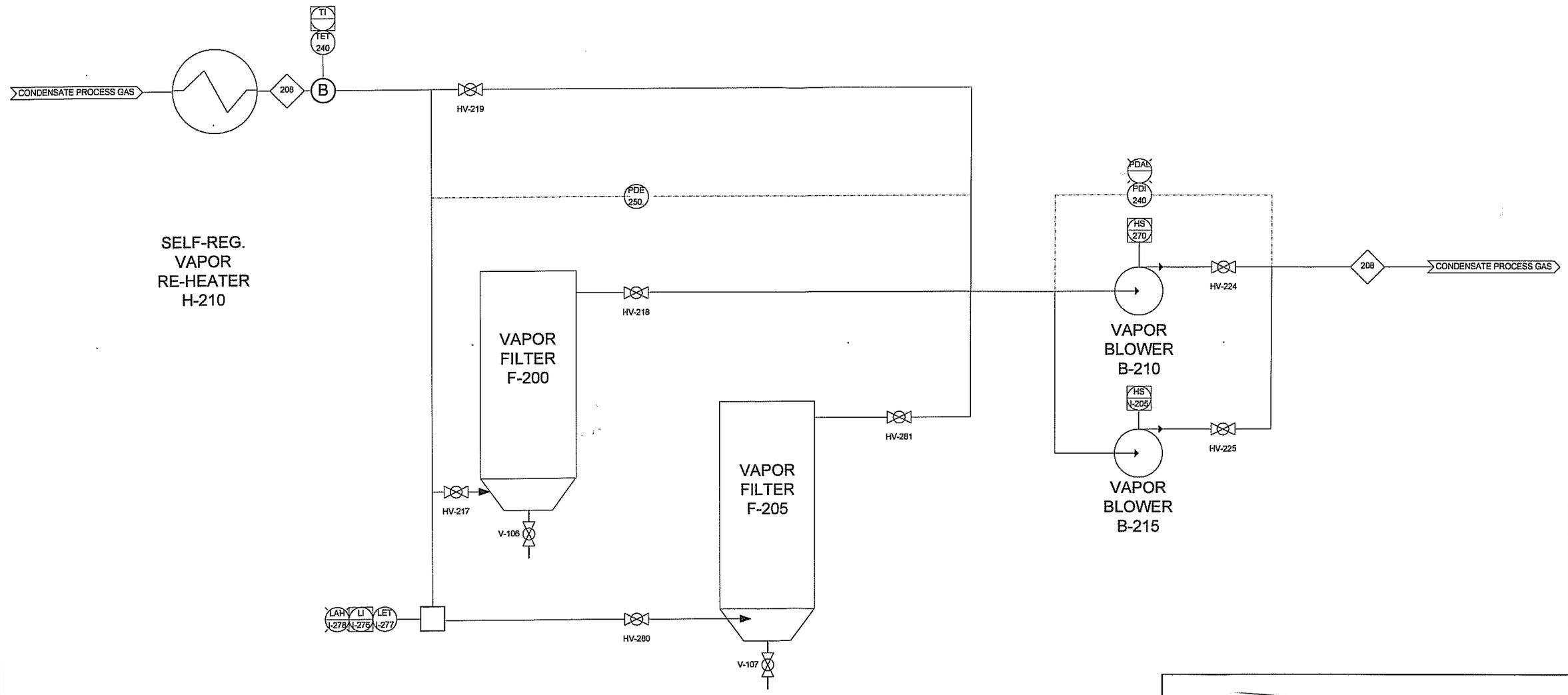

PermaFix® Northwest, Inc.

Title

RTD
PRIMARY OFFGAS FILTER SYSTEM

Rev.	Description	By	Ops. Chk	Eng. App.	Date
0	PERMIT RENEWAL	SAC			

Revision History

Dwg. No.	Pages	Rev.
PERMA-FIX-MWT-RTD-PID-001a	5 OF 7	0

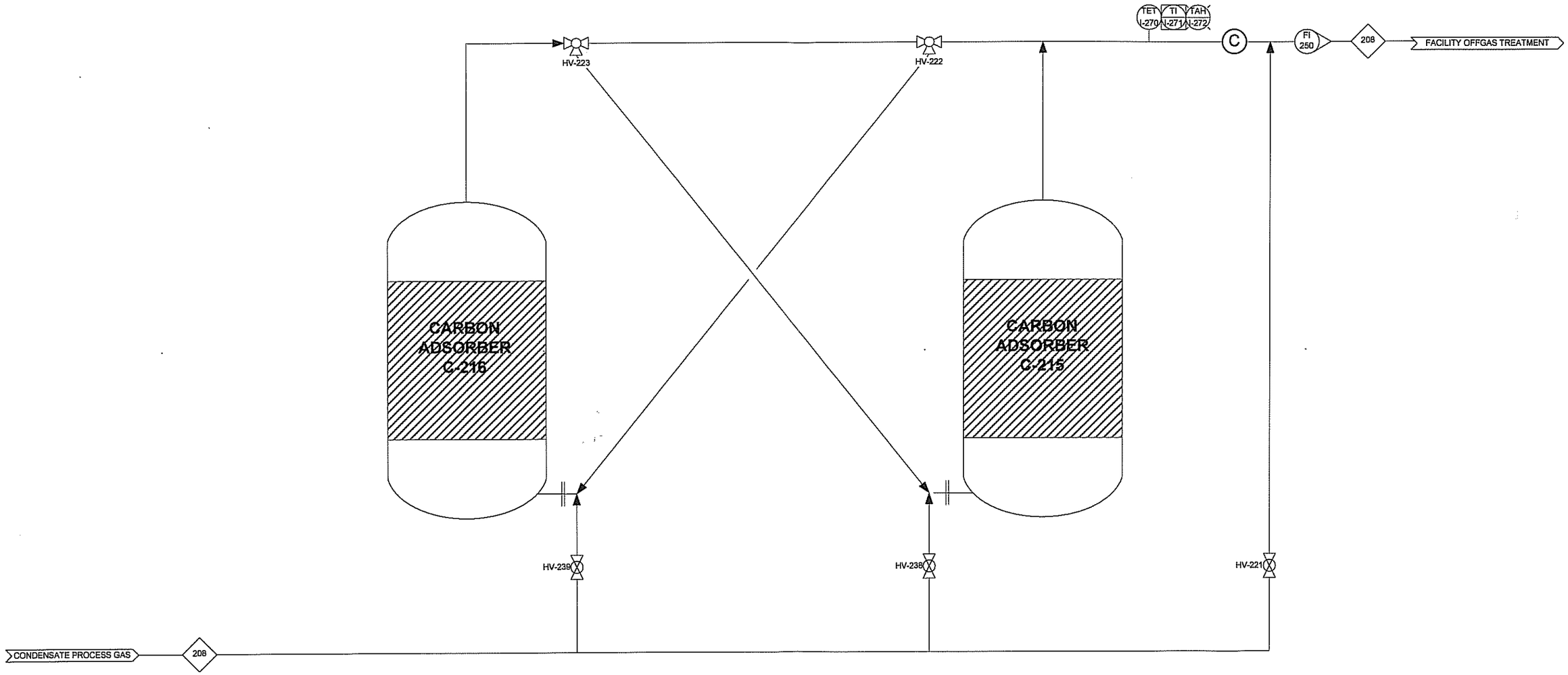

PermaFix® Northwest, Inc.

Title

RTD
PRIMARY OFFGAS GAC SYSTEM
P&ID

Rev.	Description	By	Ops. Chk	Eng. App.	Date
0	PERMIT RENEWAL	SAC			

Revision History

Dwg. No.	Pages	Rev.
PERMA-FIX-MWT-RTD-PID-001a	6 OF 7	0

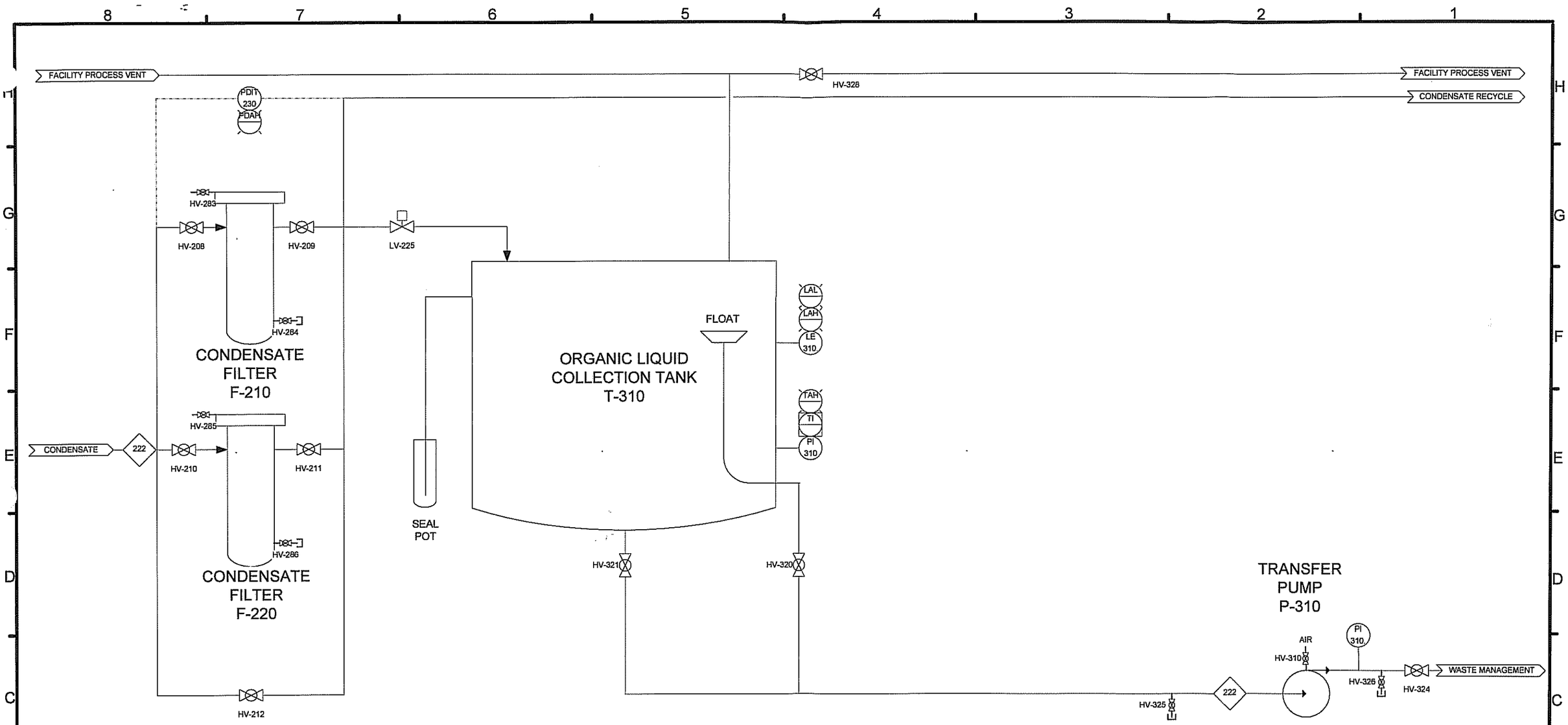

PermaFix® Northwest, Inc.

Title

RTD
SECONDARY WASTE CONDENSATE SYSTEM
P&ID

Dwg. No.	Pages	Rev.
PERMA-FIX-MWT-RTD-PID-001a	7 OF 7	0

Revision History

Rev.	Description	By	Ops. Chk	Eng. App.	Date
1	PERMIT RENEWAL REV 1		LMF		4/2011
0	PERMIT RENEWAL	SAC			

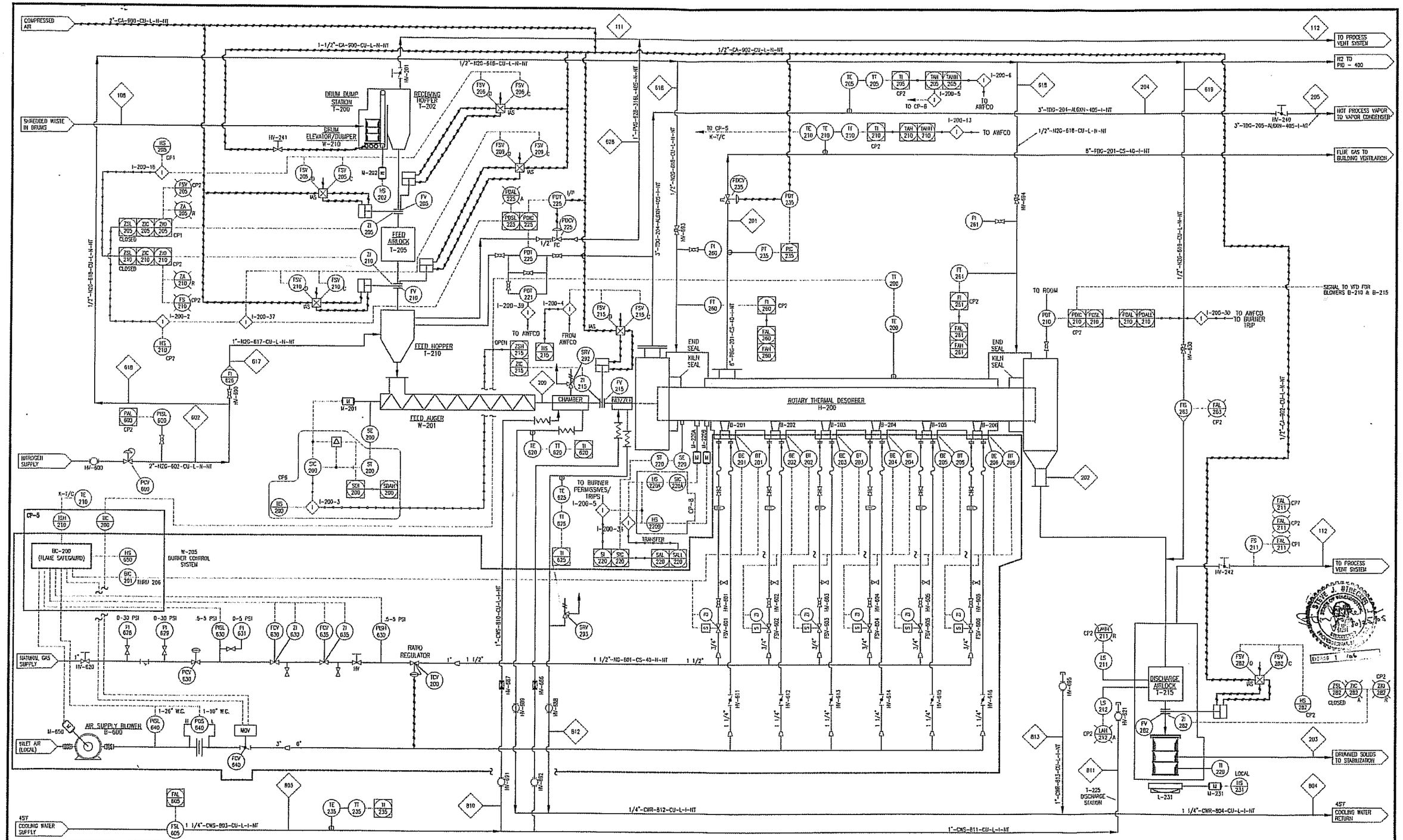

NO.	BY	DATE	CHK	REVISIONS
4	ZJF	10/24/05		AS-BUILT
3	ZJF	2/19/05	SJS	MODER AND NUVOTEC CHANGES
2	RSL	12/30/04	SJS	MODER AND NUVOTEC CHANGES
1	SJS	12/09/04	SJS	MODER AND NUVOTEC CHANGES FOR INSTRUMENT
0	RAL	11/19/04	RAK	INITIAL DRAWING RELEASE

Rev. 5 for NOD Response April 2011
For Compliance Only
Equipment subject to Subpart BB
idicated by red box

DRAWING NO.

REFERENCE DRAWINGS

DEPT/REVISION	0
PROCESS	X
PIPING	X
ELECTRICAL	X
STRUCTURAL	
PROJECT ENG.	X
QA	X
CLIENT	X
SHOP	

THIS DRAWING AND THE INFORMATION REVEALED BY IT ARE THE PROPERTY OF MERLIN ENGINEERING, INC. UNAUTHORIZED USE OR DISTRIBUTION OF THIS DRAWING OR THE INFORMATION REVEALED BY IT IS EXPRESSLY FORBIDDEN.

TOLERANCE UNLESS SPECIFIED:

FRACTIONS	DECIMALS	ANGLES
± 1/16	X.XX ±0.01 X.XXX ±0.005	± 1/2°

EQUINOX, Ltd.
Santa Fe, New Mexico 87505

MERLIN Engineering, Inc.
Boulder, Colorado 80302

CLIENT PROJECT NO. --

MERLIN PROJECT NO. TCC-PEC

DRAWN BY: R. A. LOESCH DATE: 8/5/2004
ENGINEERING: J. S. VAVRUSKA DATE: 8/1/2004
CHECKED BY: R. A. KOEHBO DATE: 8/10/2004

NUVOTEC USA
Richland, Washington 99350 505-943-5319

PEcoS MLLW PROJECT
THERMAL DESORBER SOLIDS TREATMENT
-PIPING AND INSTRUMENT DIAGRAM, AREA 200-

SCALE: NONE
MERLIN DRAWING NO. 32004-PID-200
SHEET 1 of 1
REV. 4

Job No. 4760.0

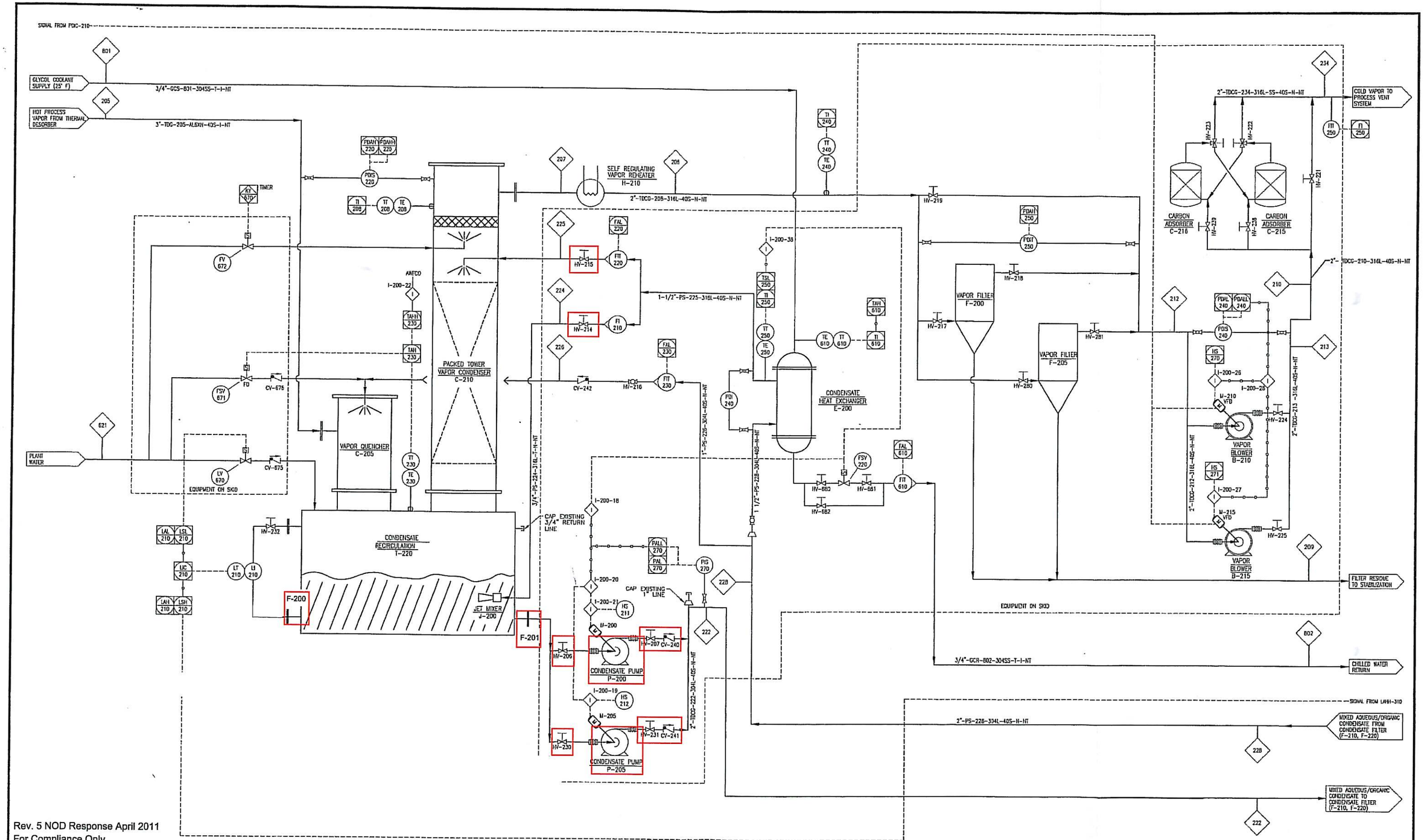

Rev. 5 NOD Response April 2011
For Compliance Only
Equipment subject to Subpart BB indicated by red box

NO.	BY	DATE	CHK	REVISIONS
4	ZJF	10/24/05		AS-BUILT
3	ZJF	2/16/05	SJS	MERIN AND NUVOTEC CHANGES
2	RSL	12/30/04	SJS	MERIN AND NUVOTEC CHANGES
1	SJS	12/10/04	SJS	REVISED STREAM FLAGS
0	RAL	11/23/04	RAK	INITIAL DRAWING RELEASE

DRAWING NO. | REFERENCE DRAWINGS

DEPT/REVISION	0	1
PROCESS	X	X
PIPING	X	X
ELECTRICAL	X	X
STRUCTURAL	X	X
PROJECT ENG.	X	X
QA	X	X
CLIENT	X	X
SHOP	X	X

THIS DRAWING AND THE INFORMATION REVEALED BY IT ARE THE PROPERTY OF MERLIN ENGINEERING, INC. UNAUTHORIZED USE OR DISTRIBUTION OF THIS DRAWING OR THE INFORMATION REVEALED BY IT IS EXPRESSLY FORBIDDEN.

TOLERANCE UNLESS SPECIFIED:

FRACTIONS	DECIMALS	ANGLES
± 1/16	X.XX ±0.01 X.XXX ±0.005	± 1/2°

EQUINOX, Ltd.
Santa Fe, New Mexico 87505

MERLIN Engineering, Inc.
Boulder, Colorado 80302

CLIENT PROJECT NO. –
MERLIN PROJECT NO. TCC-PEC

DRAWN BY: R. A. LOESCH DATE: 8/5/2004
ENGINEERING: J. S. VAVRUSKA DATE: 8/1/2004
CHECKED BY: R. A. KOENIG DATE: 8/10/2004

NUVOTEC USA
Richland, Washington 99350 505-943-5319

PFcoS MLLW PROJECT
THERMAL DESORBER CONDENSER/VAPOR SYSTEM
-PIPING AND INSTRUMENT DIAGRAM, AREA 200-

SCALE: NONE | MERLIN DRAWING NO. 32004-PID-201 | SHEET 1 OF 1 | REV. 4

Job No. 4760.0

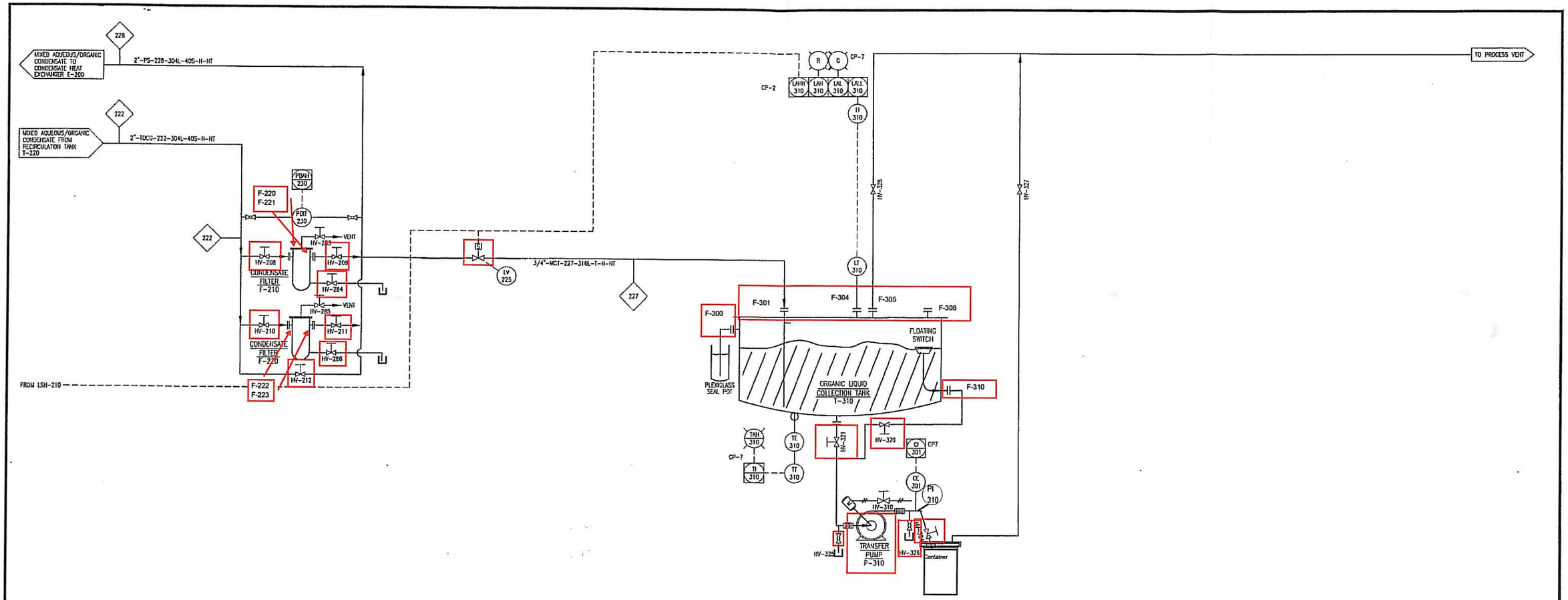

Rev. 5 NOD Response April 2011
For Compliance Only
Equipment subject to Subpart BB
indicated by red box

NO.	BY	DATE	CHK	REVISIONS
4	ZJF	10/24/05		AS-BUILT
3	ZJF	2/18/05	SJS	MEIER AND NUVOTEC CHANGES
2	RSL	12/30/04	SJS	MEIER AND NUVOTEC CHANGES
1	SJS	12/10/04	SJS	REVISED STREAM FLAGS
0	RAL	11/24/04	RAK	INITIAL DRAWING RELEASE

DRAWING NO. | REFERENCE DRAWINGS

DEPT/REVISION	0
PROCESS	X
PIPING	X
ELECTRICAL	X
STRUCTURAL	
PROJECT ENG.	X
QA	X
CLIENT	X
SHOP	

THIS DRAWING AND THE INFORMATION REVEALED BY IT ARE THE PROPERTY OF MERLIN ENGINEERING, INC. UNAUTHORIZED USE OR DISTRIBUTION OF THIS DRAWING OR THE INFORMATION REVEALED BY IT IS EXPRESSLY FORBIDDEN.

TOLERANCE UNLESS SPECIFIED:

FRACTIONS	DECIMALS	ANGLES
± 1/16	X.XX ±0.01 X.XXX ±0.005	± 1/2°

EQUINOX, Ltd.
Santa Fe, New Mexico 87505

MERLIN Engineering, Inc.
Boulder, Colorado 80302

CLIENT PROJECT NO. --
MERLIN PROJECT NO. TCC-PEC

DRAWN BY: R. A. LOESCH DATE: 9/26/2004
ENGINEERING: J. S. VAVRUSKA DATE: 9/15/2004
CHECKED BY: R. A. KOENIG DATE: 9/26/2004

NUVOTEC USA
Richland, Washington 99350 505-943-5319

PEcoS MLLW PROJECT
LIQUID WASTE PRE-TREATMENT
-PIPING AND INSTRUMENT DIAGRAM, AREA 300-

SCALE: NONE | MERLIN DRAWING NO. 32004-PID-300 | SHEET OF | REV. 4

Job No. 4760.0

The following are Identification Letters and their usage from ISA Standard S5.1, "Instrumentation Symbols and Identification," Revision 4.

Table B-1: Identification letters

First letter (4)			Succeeding letters (3)		
Measured or initiating variable		**Modifier**	**Readout or passive function**	**Output function**	**Modifier**
A	Analysis (5, 19)		Alarm		
B	Burner, Combustion		User's Choice (1)	User's Choice (1)	User's Choice (1)
C	User's Choice (1)			Control (13)	
D	User's Choice (1)	Differential (4)			
E	Voltage		Sensor (Primary Element)		
F	Flow Rate	Ratio (Fraction) (4)			
G	User's Choice (1)		Glass, Viewing Device (9)		
H	Hand				High (7, 15, 16)
I	Current (Electrical)		Indicate (10)		
J	Power	Scan (7)			
K	Time, Time Schedule	Time Rate of Change (4, 21)		Control Station (22)	
L	Level		Light (11)		Low (7, 15, 16)
M	User's Choice (1)	Momentary (4)			Middle, Intermediate (7, 15)
N	User's Choice (1)		User's Choice (1)	User's Choice (1)	User's Choice (1)
O	User's Choice (1)		Orifice, Restriction		
P	Pressure, Vacuum		Point (Test) Connection		
Q	Quantity	Integrate, Totalize (4)			
R	Radiation		Record (17)		
S	Speed, Frequency	Safety (8)		Switch (13)	
T	Temperature			Transmit (18)	
U	Multivariable (6)		Multifunction (12)	Multifunction (12)	Multifunction (12)
V	Vibration, Mechanical Analysis			Valve, Damper, Louver (13)	
W	Weight, Force		Well		
X	Unclassified (2)	X Axis	Unclassified (2)	Unclassified (2)	Unclassified (2)
Y	Event, State or Presence (20)	Y Axis		Relay, Compute, Convert (13, 14, 18)	
Z	Position Dimension	Z Axis		Driver, Actuator, Unclassified Final Control Element	

Notes for Table B-1:

NOTE 1: A "USER'S CHOICE" letter is intended to cover unlisted meanings that will be used repetitively in a particular project. If used, the letter may have one meaning as a first letter and another meaning as a succeeding letter. The meanings need to be defined only once in a legend, or otherwise, for that project. For example, the letter 'N' may be defined as "MODULUS OF ELASTICITY" as a first letter and "OSCILLOSCOPE" as a succeeding letter.

NOTE 2: The unclassified letter 'X' is intended to cover unlisted meanings that will be used only once or to a limited extent. If used, the letter may have any number of meanings as a first letter and any number of meanings as a succeeding letter. Except for its use with distinctive symbols, it is expected that the meanings will be defined outside a tagging bubble on a flow diagram. For example, XR-2 may be a stress recorder and XX-4 may be a stress oscilloscope.

NOTE 3: The grammatical form of the succeeding letter meanings may be modified as required. For example, "indicate" may be applied as "indicator" or "indicating," "transmit" as "transmitter" or "transmitting," etc.

NOTE 4: Any first letter, if used in combination with modifying letters 'D' (differential), 'F' (ratio), 'M' (momentary), 'K'(time rate of change), 'Q' (integrate or totalize), or any combination of these is intended to represent a new and separate measured variable, and the combination is treated as a first-letter entity. Thus, instruments 'TDI' and 'TI' indicate two different variables, namely, differential temperature and temperature. Modifying letters are used when applicable.

NOTE 5: First letter 'A,' "Analysis," covers all analyses not described by a "USER'S CHOICE" letter. It is expected that the type of analysis will be defined outside a tagging bubble.

NOTE 6: Use of first letter 'U' for "Multivariable" in lieu of a combination of first letters is optional. It is recommended that nonspecific designators such as 'U' be used sparingly.

NOTE 7: The use of modifying terms "high," "low," "middle" or "intermediate," and "scan" is optional.

NOTE 8: The term "safety" applies to emergency protective primary elements and emergency protective final control elements only. Thus, a self-actuated valve that prevents operation of a fluid system at a higher than desired pressure by bleeding fluid from the system is a backpressure-type PCV, even if the valve is not intended to be used normally. However, this valve is designated as a PSV if it is intended to protect against emergency conditions, i.e., conditions that are hazardous to personnel and/or equipment and that are not expected to arise normally.

The designation 'PSV' applies to all valves intended to protect against emergency pressure conditions regardless of whether the valve construction and mode of operation place them in the category of the safety valve, relief valve, or safety relief valve. A rupture disc is designated 'PSE.'

NOTE 9: The passive function 'G' applies to instruments or devices that provide an uncalibrated view such as sight glasses and television monitors.

NOTE 10: "Indicate" normally applies to the readout, analog or digital, of an actual measurement. In the case of a manual loader, it may be used for the dial or setting indication, i.e., for the value of the initiating variable.

NOTE 11: A pilot light that is part of an instrument loop should be designated by a first letter followed by the succeeding letter 'L.' For example, a pilot light that indicates an expired time period should be tagged 'KQL.' If it is desired to tag a pilot light that is not part of an instrument loop, the light is designated in the same way. For example, a running light for an electric motor may be tagged 'EL,' assuming voltage to be the appropriate measured variable, or 'YL,' assuming the operating status is being monitored. The unclassified variable 'X' should be used only for applications that are limited in extent. 'XL' should not be used for motor running lights as these are commonly numerous. It is permissible to use the "USER'S CHOICE" letters 'M,' 'N,' or 'O' for a motor running light when the meaning is previously defined. If 'M' is used, it must be clear that the letter does not stand for the word "Motor," but for a monitored state.

NOTE 12: Use of a succeeding letter 'U' for "Multifunction" instead of a combination of other functional letters is optional. This nonspecific variable designator should be used sparingly.

NOTE 13: A device that connects, disconnects, or transfers one or more circuits may be either a switch, a relay, an ON-OFF controller, or a control valve, depending on the application.

If the device manipulates a fluid process stream and is not a hand-actuated ON-OFF block valve, it is designated as a control valve. It is incorrect to use the succeeding letters 'CV' for anything other than a self-actuated control valve. For all applications, other than fluid process streams, the device is designated as follows:

A *switch*, if it is actuated by hand.

A switch or an ON-OFF controller, if it is automatic and is the first such device in a loop. The term "Switch" is generally used if the device is used for alarm, pilot light, selection, interlock, or safety. The term "Controller" is generally used if the device is used for normal operating control.

A relay, if it is automatic and is not the first such device in a loop, i.e., it is actuated by a switch or an ON-OFF controller.

NOTE 14: It is expected that the functions associated with the use of succeeding letter 'Y' will be defined outside a bubble on a diagram when further definition is considered necessary. This definition need not be made when the function is self-evident, as for a solenoid valve in a fluid signal line.

NOTE 15: The modifying terms "high," "low," and "middle" or "intermediate" correspond to values of the measured variable, not of the signal, unless otherwise noted. For example, a high-level alarm derived from a reverse-acting level transmitter signal shall be an 'LAH,' even though the alarm is actuated when the signal falls to a low value. The terms may be used in combinations as appropriate (see Section 6.9A ISA-S5.1).

NOTE 16: The terms "high" and "low," when applied to positions of valves and other open-close devices, are defined as follows: "high" denotes that the valve is in or approaching the fully open position, and "low" denotes it is in or approaching the fully closed position.

NOTE 17: The word "record" applies to any form of permanent storage of information that permits retrieval by any means.

NOTE 18: For use of the term "transmitter" versus "converter," see the definitions in Section 3, ISA-S5.1.

NOTE 19: First letter 'V,' "Vibration or Mechanical Analysis," is intended to perform the duties in machinery monitoring that the letter 'A' performs in more general analyses. Except for vibration, it is expected that the variable of interest will be defined outside the tagging bubble.

NOTE 20: First letter 'Y' is intended for use when control or monitoring responses are event-driven as opposed to time- or time-schedule-driven. 'Y,' in this position, can also signify presence or state.

NOTE 21: Modifying letter 'K,' in combination with a first letter, such as 'L,' 'T,' or 'W,' signifies a time rate of change of the measured or initiating variable. 'WKIC,' for instance, may represent a rate-of-weight-loss controller.

NOTE 22: Succeeding letter 'K' is a user's option for designating a *control station*, while the succeeding letter 'C' is used for describing automatic or manual *controllers*. See Definitions, ISA S5.1.