SECTION 4

PROCESS INFORMATION

Attachment 4-4
Tank Certifications

MIXED WASTE FACILITY
RCRA/TSCA PERMIT APPLICATION

PERMA-FIX NORTHWEST RICHLAND, INC.

RICHLAND, WASHINGTON

RESOURCE CONSERVATION AND RECOVERY ACT
40 CFR PART 264, SUBPART J
NEW TANK CERTIFICATION
TANK NO. 310

Prepared For

PERMA-FIX NORTHWEST RICHLAND, INC.
2025 BATTELLE BLVD.
RICHLAND, WASHINGTON 99352

APRIL 2011

Prepared By:

SCHREIBER, YONLEY & ASSOCIATES
16252 WESTWOODS BUSINESS PARK DRIVE
ELLISVILLE, MISSOURI 63021

Project No. 070116

SCHREIBER & YONLEY ASSOCIATES
ENVIRONMENTAL ENGINEERS

16252 Westwoods Business Park Drive • Ellisville, MO 63021 • (636) 256-7200
www.perma-fix.com/sya

TABLE OF CONTENTS

PROFSSIONAL ENGINEERING CERTIFICATION ii

1.0 INTRODUCTION 1

2.0 SCOPE 1

3.0 REGULATORY REFERENCE 1

4.0 DESIGN REVIEW (40 CFR 264.192(A)) 2
- 4.1 Design Standards (40 CFR 264.192(a)(1)) 2
- 4.2 Hazardous Waste Characteristics (40 CFR 265.192(a)(2)) 2
- 4.3 Soil and Water Contact (40 CFR 264.192(a)(3)) 4
- 4.4 Vehicular Traffic Issues (40 CFR 265.192(a)(4)) 4
- 4.5 Design Considerations (40 CFR 265.192(a)(5)) 4
  - 4.5.1 Tank Foundation Design (40 CFR 265.192(a)(5)(i)) 4
  - 4.5.2 Tank Anchoring Systems (40 CFR 265.192(a)(5)(ii)) 5
  - 4.5.3 Frost Heave Calculations (40 CFR 265.192(a)(5)(iii)) 5

5.0 INSTALLATION REVIEW (40 CFR 265.192(B)) 5

6.0 UNDERGROUND TANK BACKFILLING PROVISIONS (40 CFR 265.192(C)) 6

7.0 TANK TIGHTNESS TESTING (40 CFR 265.192(D)) 6

8.0 ANCILLARY EQUIPMENT PROTECTION (40 CFR 265.192(E)) 6

9.0 TANK SYSTEM CORROSION PROTECTION (40 CFR 265.192(F)) 6

APPENDICES

APPENDIX A	FACILITY MAPS
APPENDIX B	TANK SYSTEM DRAWING
APPENDIX C	REGULATORY REFERENCES
APPENDIX D	TANK DESIGN DRAWINGS AND SPECIFICATIONS
APPENDIX E	MIXED WASTE CONSTITUENT DATA
APPENDIX F	INSPECTION FORMS
APPENDIX G	PHOTO LOG
APPENDIX H	PREVIOUS CONCRETE FOUNDATION ASSESSMENT AND CERTIFICATION

PROFESSIONAL ENGINEERING CERTIFICATION

Based on the information provided and documented in this report and in accordance with the provisions of 40 CFR 264.192, I certify that the new tank system as described herein, referred to as the Thermal Desorber Organic Liquid Collection Tank System is adequately designed and that the tank system has sufficient structural strength to manage the materials to be stored and processed in it.

I also certify that, based on the information provided, the materials of construction are compatible with the wastes to be stored and processed in the system and that adequate corrosion protection has been specified and applied to the tank systems. I further certify that the installation of the tank system as described herein has been inspected for the presence of defects as noted in 40 CFR 264.192 and has been deemed acceptable to be placed into service as described herein.

I certify under penalty of law that this document and all attachments were prepared under my direction and supervision according to a system designed to assure that qualified personnel properly gathered and evaluated the information submitted. Based on my inquiry of the person or persons who manage the system, or those persons directly responsible for gathering the information, the information submitted is, to the best of my knowledge and belief, true, accurate, and complete. I am aware that there are significant penalties for submitting false information, including the possibility of fine and imprisonment for knowing violations.

5/2/2011

Robert J. Schreiber, Jr., P.E., P.E.
Washington Registration No. 38740

ROBERT J. SCHREIBER
STATE OF WASHINGTON
38740
REGISTERED
PROFESSIONAL ENGINEER

EXPIRES 11/19/11

1.0 INTRODUCTION

Perma-Fix Northwest Richland, Inc (PFNW) owns and operates a mixed waste management facility located in Richland, Washington. Appendix A contains maps of the facility location. This facility manages various types of mixed waste materials (radioactive and hazardous wastes) through numerous processes as described in the hazardous waste facility permit. One of these processes involves the tank system associated with the waste thermal desorber system. In short, the thermal desorber system utilizes natural gas burners to heat up the desorber chamber where certain volatile compounds are separated from solids. The solids are later removed from the process, allowed to cool, and then managed for disposal at another facility. After the volatiles are released from the solids, they are collected, condensed, and transferred to a tank and managed for disposal at another facility. To support this thermal desorber system, the tank system has been designed to collect the desorbed volatile compounds. The new tank unit included in the Thermal Desorber Tank System is designated as:

- Tank No. T-310, Organic Liquid Collection Tank, a 1,000-gallon storage tank.

In addition to the tank unit, ancillary equipment such as process piping, vent piping, pumps, and monitoring equipment have been designed and installed. A schematic of the Organic Liquid Collection Tank System is included in Appendix B.

Since this new tank system is to manage material classified as hazardous wastes, as defined in 40 CFR Part 261, Identification and Listing of Hazardous Waste, a certification of the tank system must be performed under the requirements of the Resource Conservation and Recovery Act (RCRA). The Richland facility is a permitted treatment, storage, and disposal facility (TSDF), as defined in 40 CFR Part 264; therefore, the tank certification requirements are located in Subpart J, Tank System, of this part. The identified tank system is a new unit, and the applicable certification is found in 40 CFR 264.192.

2.0 SCOPE

PFNW has retained Schreiber, Yonley & Associates (SYA) to complete a RCRA new tank system certification for the new Thermal Desorber Tank System described above. This assessment and certification does not extend to any other units in place or proposed at the facility. The tank assessment and certification is completed in accordance with the provisions of 40 CFR 264.192 only.

3.0 REGULATORY REFERENCE

This tank system certification is based on the permitted facility regulations in place at the time of construction and as found in 40 CFR 264.192. A copy of the applicable text is included in Appendix C. Specifically, the assessment includes:

- a description and review of the design criteria used for the new tank system;
- a review of the hazardous waste characteristics in reference to the tank system's materials of construction;

- an assessment of any corrosion potential for the tank system due to contact with soil or water;
- a review of vehicular traffic patterns that could damage any of the tank system components; and,
- an assessment of other design considerations specifically included in the regulation.

The installation review assesses the following criteria:

- Visually inspect the new system in accordance with the installation provisions;
- Provide for and/or review the tank tightness records;
- Inspect the new ancillary equipment associated with the tank; and,
- Review the corrosion protection needed for the system.

4.0 DESIGN REVIEW (40 CFR 264.192(a))

The following sections provide the detail of the various tank assessment and certification areas reviewed.

4.1 Design Standards (40 CFR 264.192(a)(1))

The tank was designed in accordance with the Underwriters Laboratories (UL) Standard 142, Steel Aboveground Tanks for Flammable and Combustible Liquids. The tank is not required to be code stamped. The tank will operate at atmospheric pressure. The venting requirements of these tanks are in accordance with the UL-142 requirements and were rechecked using the American Petroleum Institute (API) Standard 2000, Venting Atmospheric and Low Pressure Storage Tanks. A 2" open pipe to a liquid seal pot provides adequate overflow protection during tank operation. The tank was shop fabricated of ASTM A167-91 304 stainless steel on all wetted surfaces with a corrosion allowance of 1/16." The tank has a nominal capacity of 1,000 gallons and has a dished top head and a flanged and dished bottom head. The tank is supported by four (4) equally spaced legs. Tank design drawings and specifications are included in Appendix D.

The ancillary piping systems were designed in accordance with the specifications of the American Society of Mechanical Engineers (ASME) Code B31.3, Process Piping. All nozzles and attaching piping is 304 stainless steel. Piping design is in accordance with ANSI Standard B31.3. Flanges on the tank are rated at 150# according to ANSI B16.5.

4.2 Hazardous Waste Characteristics (40 CFR 265.192(a)(2))

The mixed waste thermal desorber feed material is a mixture of water, inorganic salts, metal solids and sludges, organic solids and sludges, and flammable/combustible organic compounds. These materials are primarily taken from various Department of Defense and Department of Energy waste removal projects. A typical component profile for the mixed waste is included in Appendix E of this certification. These materials will be processed through the Thermal Desorber, and the lighter liquids/organics desorbed from the materials will be condensed and collected in the Organic Liquid Collection Tank.

The desorbed liquids that are desorbed and collected in Tank 310 will consist of mostly water and some organics. The following list of typical organic compounds was reviewed to determine the expected corrosion rate. In accordance with data found in Table 23-2, the Corrosion Data Survey, Metals Section, 6th Edition, provided by the National Association of Corrosion Engineers (NACE), the material of construction for the tanks and ancillary equipment (304 stainless steel) is found to be compatible with the constituents found in the hazardous waste stream. For all significant materials at the expected maximum temperature range of the tank, the expected corrosion rate was found to be <0.05 inch per year for one compound, <0.02 for four compounds, but <0.002 for most constituents. NACE also noted the expected corrosion rate for water and elemental mercury is also <0.002 inch per year.

Constituent	NACE Corrosion Rate (in/yr)
Alcohols	
Butanol	<0.002
Isopropanol	<0.002
Ethanol	<0.002
N-Propyl Alcohol	<0.002
Aldehydes	
Formaldehyde	<0.002
Acetaldehyde	<0.002
Benzaldehyde	<0.002
Metaldehyde	<0.002
Straight Chain Alkanes	
Hexane	<0.002
Heptane	<0.002
Pentane	<0.020
Isododecane	<0.020
Amines	
Methylamine	<0.020
Trimethyl Amine	<0.002
Tributyl Amine	<0.002
Isoproyl Amine	<0.002
Aeromatics	
Toluene	<0.002
Benzene	<0.002
Xylene	<0.002
Phenol	<0.020
Chlorinated Solvent	
Tricholorethanes	<0.002
Carbon Tetrachloride	<0.020

Constituent	NACE Corrosion Rate (in/yr)
Ethylene Dichloride	<0.050
Dichloropropene	<0.002
Ethers	
Dimethyl Ether	<0.020
Diethyl Ether	<0.002
Ethylene Oxide	<0.002
1,4-Dioxane	<0.002
Ketone	
Methyl Ethyl Ketone	<0.002
Cyclohexanone	<0.020
Acetone	<0.002
Diisobutyl Ketone	<0.002

In addition, thickness testing of the tank shell will be performed before the tank is to be put into service and repeated annually to confirm that the specified corrosion allowance is maintained, along with a determination of the remaining life expectancy.

4.3 Soil and Water Contact (40 CFR 264.192(a)(3))

The new tank and the ancillary equipment are designed and constructed within a concrete containment structure that eliminates any contact with the soil. As detailed in the RCRA Part B permit, this tank system is housed within Building 13. Therefore, in accordance with 40 CFR 264.193(c)(4), no contact with accumulated water is expected that will accelerate the tank corrosion rate.

4.4 Vehicular Traffic Issues (40 CFR 265.192(a)(4))

No portion of the new tank system is located underground. SYA has reviewed the tank system design layout to determine whether current traffic patterns could pose a danger to any portion of the new tank systems. SYA has determined that no portion of the system can be damaged by vehicular traffic patterns.

4.5 Design Considerations (40 CFR 265.192(a)(5))

The following are additional design considerations that were reviewed in order to complete the RCRA tank system certification.

4.5.1 Tank Foundation Design (40 CFR 265.192(a)(5)(i))

The design for the tank system is based on the nominal 1,000 gallon capacity and a conservative liquid specific gravity of 1.5. The weight of the material is 12,525 pounds, and the weight of the tank is 1,514 pounds. The total weight of the filled

tank is 14,039 pounds. The tank support is four legs, each on a plate with a dimension of 8" x 8". Therefore for the straight compressive strength calculation, the loaded tank exerts 54.8 lb/in^2 on the concrete floor. The tank foundation design calculations are included in Appendix H of this report and show that the floor system within Building 13 is adequately designed for the tank unit.

4.5.2 Tank Anchoring Systems (40 CFR 265.192(a)(5)(ii))

The facility is not located in an area listed in 40 CFR §264, Appendix VI for seismic activity. Therefore, the system is not in a seismic zone subject to §264.18(a). No tank anchoring system is needed or designed since the tank will not be constructed/installed where tank floatation and/or dislodgement would occur. The tank will be installed within an existing building and above the top of the containment walls.

4.5.3 Frost Heave Calculations (40 CFR 265.192(a)(5)(iii))

No frost heave calculations are included herein since the tank system is to be installed within a process building.

5.0 INSTALLATION REVIEW (40 CFR 265.192(b))

SYA completed a visual review of the tank system on April 5, 2011, as specified in the regulation. As guidance, SYA utilized inspection records and procedures in API Standards 653 to complete the review of the tank system. The completed inspection forms are included in Appendix F. A photographic log of the tank system and its components are included in Appendix G.

SYA completed the inspection and found the following issues:

Tank 310

Item	Issue Description
Grounding	Grounding cable and rod for tank needs to be installed.
Emergency Relief Vent	Proper emergency relief venting is needed for the tank.

Piping System and Ancillary Equipment

Item	Issue Description
Sample Port	The sample port consisted of a single valve and should be either double valves or valved and capped.
Grounding	Grounding from the piping system through the tank and into the grid should be installed.

These conditions must be remedied before the tank system is placed into service.

6.0 UNDERGROUND TANK BACKFILLING PROVISIONS (40 CFR 265.192(c))

No underground components are included in the tank system being reviewed and certified by this report.

7.0 TANK TIGHTNESS TESTING (40 CFR 265.192(d))

The tank and pipe tightness testing will be completed prior to the tank system being placed in service.

8.0 ANCILLARY EQUIPMENT PROTECTION (40 CFR 265.192(e))

As detailed in the tank system inspection records located in Appendix F, the ancillary equipment was found to be adequately supported and protected from damage. In addition, the piping systems are designed and anchored to minimize system vibration and thermal expansion/contraction. The piping systems were inspected in accordance with the provisions of API 570 Piping Inspection Code: Inspection, Repairing, Alteration, and Rerating of In-service Piping Systems.

9.0 TANK SYSTEM CORROSION PROTECTION (40 CFR 265.192(f))

As stated in Section 4.3, the tank system is in a process building and is supported by legs. The exterior of the tank does not have contact with soil, precipitation, or accumulated liquids. The tank is constructed of stainless steel.

APPENDIX A

FACILITY MAPS

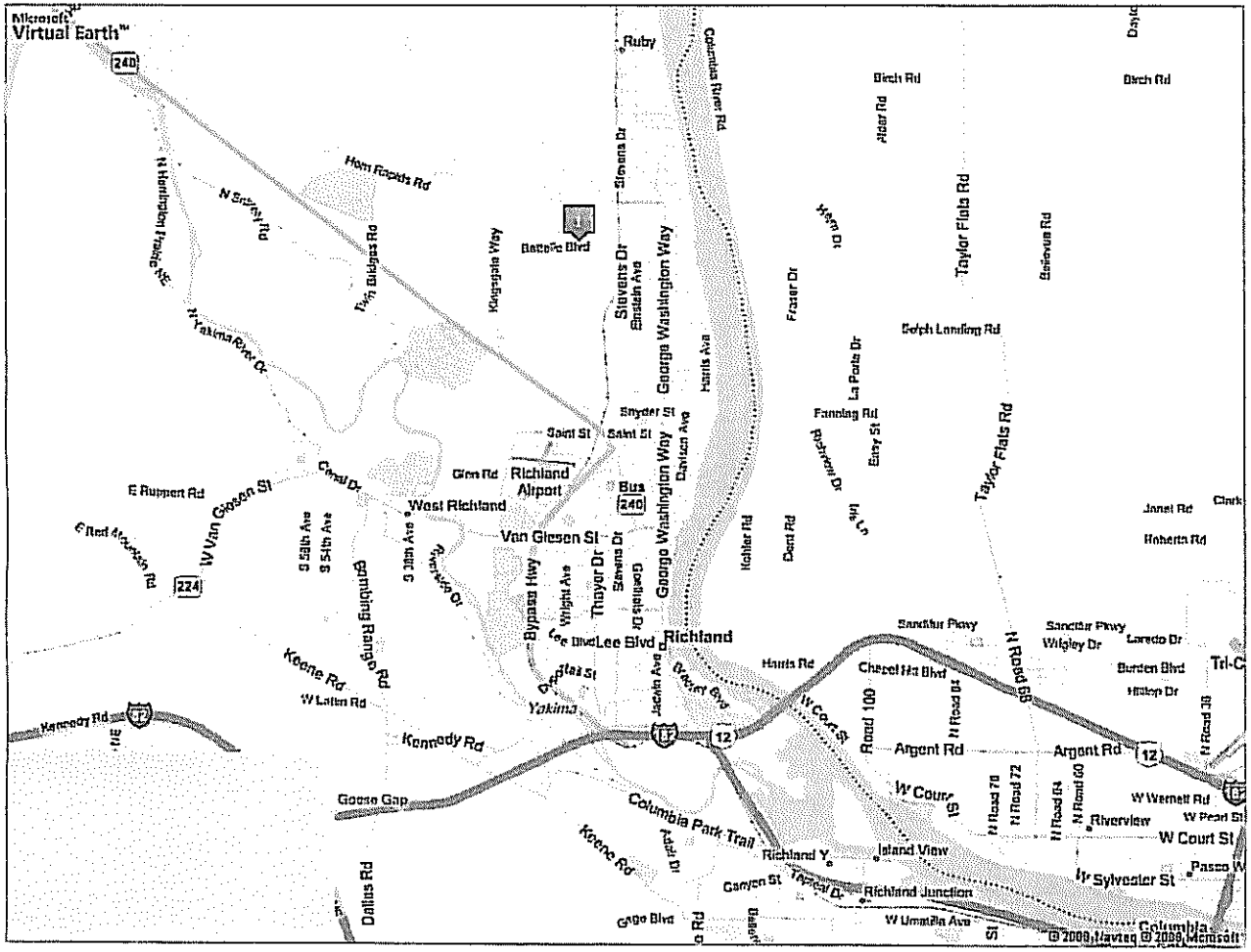
Microsoft Virtual Earth™
240
Ruby
Columbia River Rd
Birch Rd
Birch Rd
Alder Rd
Hem Rapids Rd
N Sniley Rd
Twin Bridges Rd
Kingsgate Way
Battelle Blvd
Stevens Dr
Einstein Ave
George Washington Way
Harris Ave
Taylor Flats Rd
Bellevue Rd
Fraser Dr
Hem Dr
Ralph Landing Rd
La Porte Dr
Fanning Rd
Easy St
Taylor Flats Rd
Snyder St
Saint St
Saint St
Glen Rd
Richland Airport
Bus 240
West Richland
Van Giesen St
Canal Dr
E Ruppert Rd
W Van Giesen St
224
S 58th Ave
S 54th Ave
S 38th Ave
Bombing Range Rd
Riverside Dr
Bypass Hwy
Wright Ave
Thayer Dr
Stevens Dr
George Washington Way
Davison Ave
Kohler Rd
Dent Rd
Janet Rd
Roberta Rd
Sandtur Pkwy
Sandtur Pkwy
Wrigley Dr
Laredo Dr
Burden Blvd
Hilltop Dr
Lee Blvd
Lee Blvd
Richland
Harris Rd
Chapel Hill Blvd
N Road 68
Keene Rd
W Lafon Rd
Yakima
Jadwin Ave
Bradley Blvd
W Court St
Road 100
N Road 84
Argent Rd
Argent Rd
12
Kennedy Rd
Kennedy Rd
Goose Gap
Columbia Park Trail
Keene Rd
Richland Y
Island View
W Court St
N Road 78
N Road 72
N Road 64
N Road 60
Riverview
W Wernett Rd
W Pearl St
W Court St
W Sylvester St
Pasco W
Canyon St
Richland Junction
W Umatilla Ave
Columbia
Dallas Rd
Gage Blvd
© 2008 Navteq © 2008 Microsoft

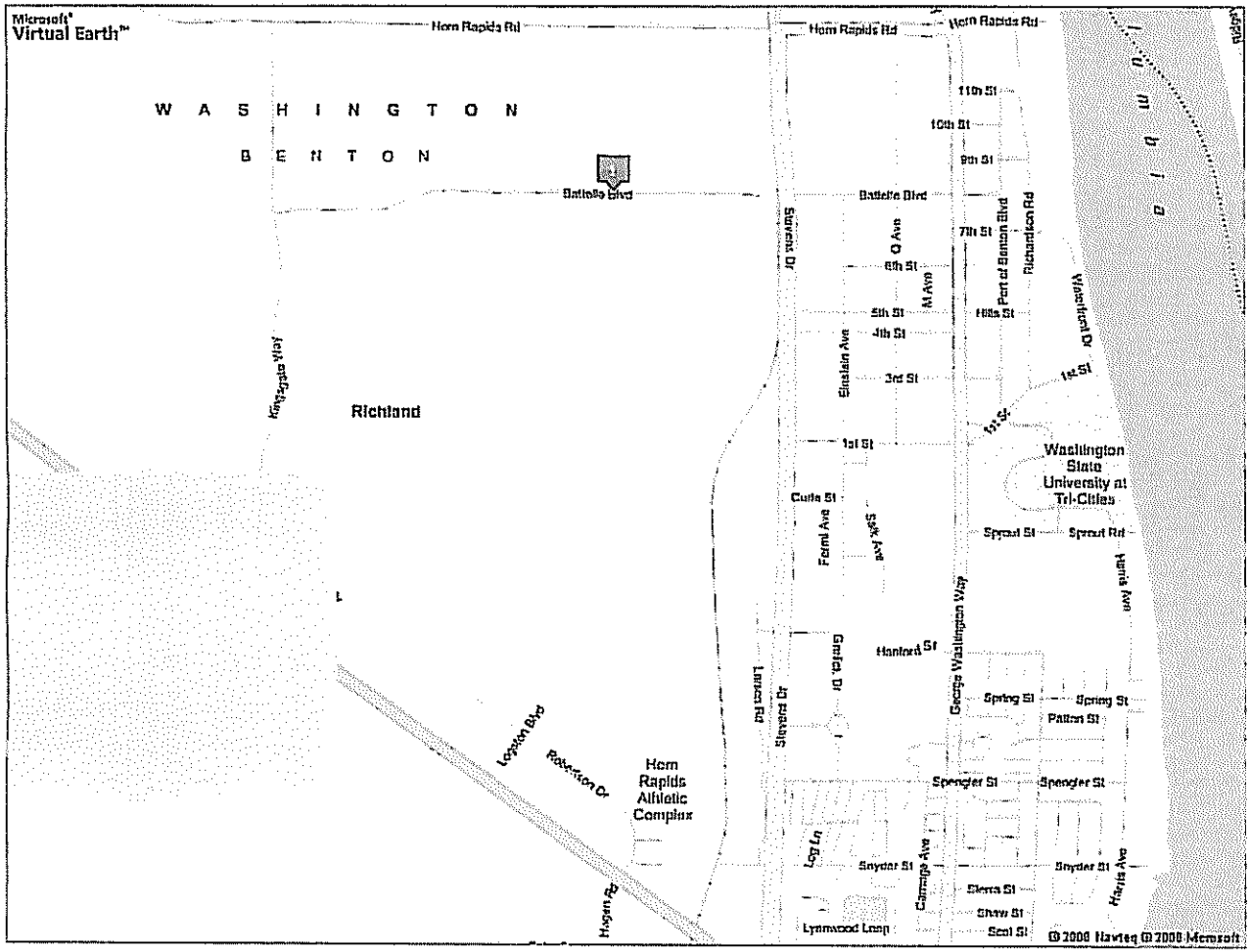
Microsoft Virtual Earth
Horn Rapids Rd
WASHINGTON
BENTON
Battelle Blvd
Richland
Kingsgate Way
Logston Blvd
Robertson Dr
Hagen Rd
Horn Rapids Athletic Complex
Stevens Dr
Q Ave
M Ave
Einstein Ave
Fermi Ave
Salk Ave
Curie St
Gretel Dr
Lawson Rd
Log Ln
Lynnwood Loop
Carnage Ave
George Washington Way
Port of Benton Blvd
Richardson Rd
Waterfront Dr
Harris Ave
Hanford St
Spring St
Patton St
Spengler St
Snyder St
Sierra St
Shaw St
Scot St
Sprout St
Sprout Rd
Washington State University at Tri-Cities
11th St
10th St
9th St
7th St
6th St
5th St
4th St
3rd St
1st St
Hills St
Columbia
© 2000 Navteq © 2000 Microsoft

APPENDIX B

TANK SYSTEM DRAWING

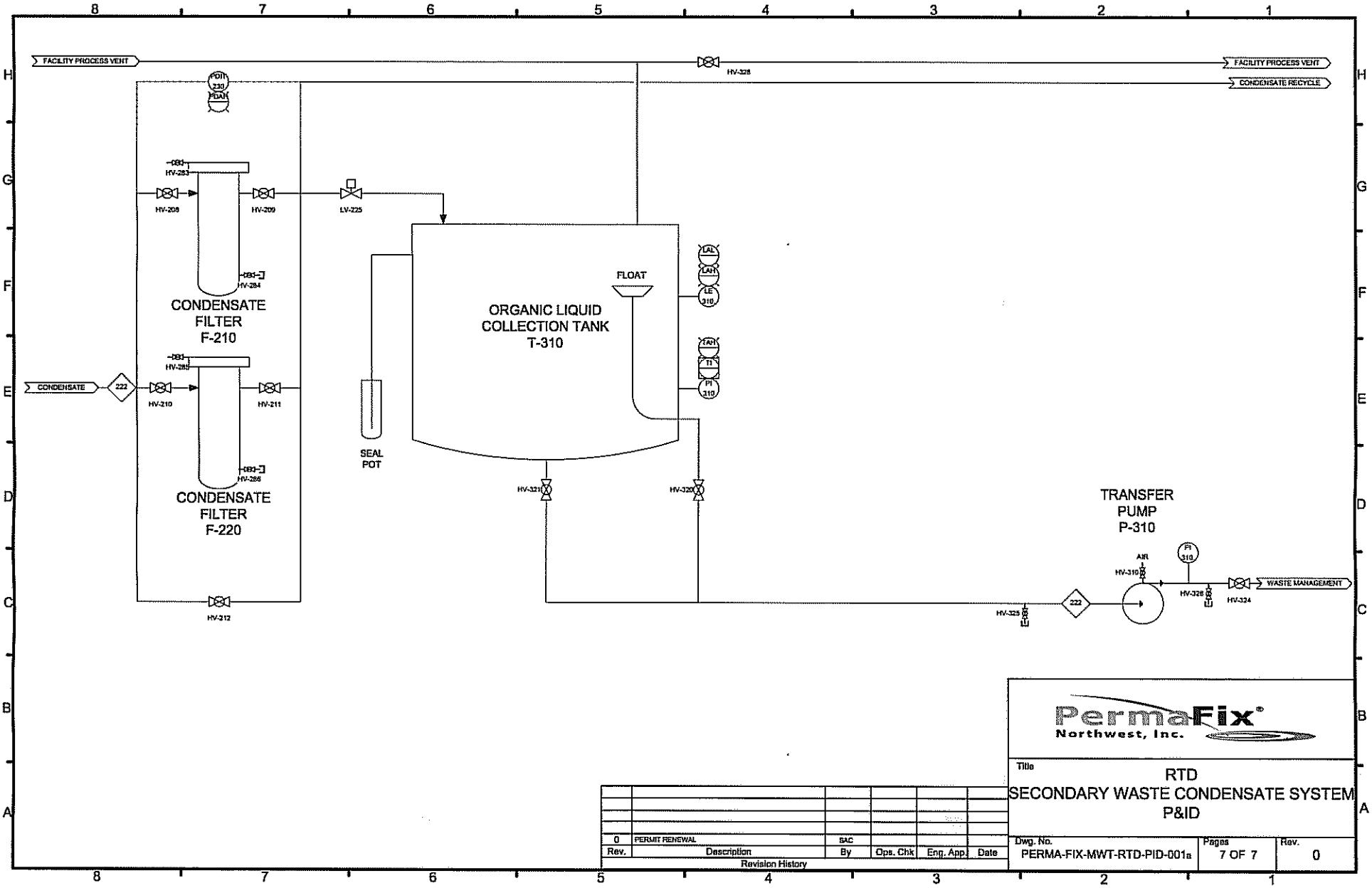

PermaFix® Northwest, Inc.

Title
RTD
SECONDARY WASTE CONDENSATE SYSTEM
P&ID

Rev.	Description	By	Ops. Chk	Eng. App.	Date
0	PERMIT RENEWAL	SAC			

Revision History

Dwg. No.	Pages	Rev.
PERMA-FIX-MWT-RTD-PID-001a	7 OF 7	0

APPENDIX C

REGULATORY REFERENCES

40 CFR Part 264, Section192 - Design and installation of new tank systems or components

§264.192 Design and installation of new tank systems or components

(a) Owners or operators of new tank systems or components must obtain and submit to the Regional Administrator, at time of submittal of part B information, a written assessment, reviewed and certified by a qualified Professional Engineer, in accordance with §270.11(d) of this chapter, attesting that the tank system has sufficient structural integrity and is acceptable for the storing and treating of hazardous waste. The assessment must show that the foundation, structural support, seams, connections, and pressure controls (if applicable) are adequately designed and that the tank system has sufficient structural strength, compatibility with the waste(s) to be stored or treated, and corrosion protection to ensure that it will not collapse, rupture, or fail. This assessment, which will be used by the Regional Administrator to review and approve or disapprove the acceptability of the tank system design, must include, at a minimum, the following information:

(1) Design standard(s) according to which tank(s) and/or the ancillary equipment are constructed;

(2) Hazardous characteristics of the waste(s) to be handled;

(3) For new tank systems or components in which the external shell of a metal tank or any external metal component of the tank system will be in contact with the soil or with water, a determination by a corrosion expert of:

(i) Factors affecting the potential for corrosion, including but not limited to:

(A) Soil moisture content;

(B) Soil pH;

(C) Soil sulfides level;

(D) Soil resistivity;

(E) Structure to soil potential;

(F) Influence of nearby underground metal structures (e.g., piping);

(G) Existence of stray electric current;

(H) Existing corrosion-protection measures (e.g., coating, cathodic protection), and

(ii) The type and degree of external corrosion protection that are needed to ensure the integrity of the tank system during the use of the tank system or component, consisting of one or more of the following:

(A) Corrosion-resistant materials of construction such as special alloys, fiberglass reinforced plastic, etc.;

(B) Corrosion-resistant coating (such as epoxy, fiberglass, etc.) with cathodic protection (e.g., impressed current or sacrificial anodes); and

(C) Electrical isolation devices such as insulating joints, flanges, etc.

[Note: The practices described in the National Association of Corrosion Engineers (NACE) standard, "Recommended Practice (RP-02-85)-Control of External Corrosion on Metallic Buried, Partially Buried, or Submerged Liquid Storage Systems," and the American Petroleum Institute (API) Publication 1632, "Cathodic Protection of Underground Petroleum Storage Tanks and Piping Systems," may be used, where applicable, as guidelines in providing corrosion protection for tank systems.]

(4) For underground tank system components that are likely to be adversely affected by vehicular traffic, a determination of design or operational measures that will protect the tank system against potential damage; and

(5) Design considerations to ensure that:

(i) Tank foundations will maintain the load of a full tank;

(ii) Tank systems will be anchored to prevent flotation or dislodgment where the tank system is placed in a saturated zone, or is located within a seismic fault zone subject to the standards of §264.18(a); and

(iii) Tank systems will withstand the effects of frost heave.

(b) The owner or operator of a new tank system must ensure that proper handling procedures are adhered to in order to prevent damage to the system during installation. Prior to covering, enclosing, or placing a new tank system or component in use, an independent, qualified, installation inspector or a qualified Professional Engineer, either of whom is trained and experienced in the proper installation of tanks systems or components, must inspect the system for the presence of any of the following items:

(1) Weld breaks;

(2) Punctures;

(3) Scrapes of protective coatings;

(4) Cracks;

(5) Corrosion;

(6) Other structural damage or inadequate construction/installation.

All discrepancies must be remedied before the tank system is covered, enclosed, or placed in use.

(c) New tank systems or components that are placed underground and that are backfilled must be provided with a backfill material that is a noncorrosive, porous, homogeneous substance and that is installed so that the backfill is placed completely around the tank and compacted to ensure that the tank and piping are fully and uniformly supported.

(d) All new tanks and ancillary equipment must be tested for tightness prior to being covered, enclosed, or placed in use. If a tank system is found not to be tight, all repairs necessary to remedy the leak(s) in the system must be performed prior to the tank system being covered, enclosed, or placed into use.

(e) Ancillary equipment must be supported and protected against physical damage and excessive stress due to settlement, vibration, expansion, or contraction.

[Note: The piping system installation procedures described in American Petroleum Institute (API) Publication 1615 (November 1979), "Installation of Underground Petroleum Storage Systems," or ANSI Standard B31.3, "Petroleum Refinery Piping," and ANSI Standard B31.4 "Liquid Petroleum Transportation Piping System," may be used, where applicable, as guidelines for proper installation of piping systems.]

(f) The owner or operator must provide the type and degree of corrosion protection recommended by an independent corrosion expert, based on the information provided under paragraph (a)(3) of this section, or other corrosion protection if the Regional Administrator believes other corrosion protection is necessary to ensure the integrity of the tank system during use of the tank system. The installation of a corrosion protection system that is field fabricated must be supervised by an independent corrosion expert to ensure proper installation.

(g) The owner or operator must obtain and keep on file at the facility written statements by those persons required to certify the design of the tank system and supervise the installation of the tank system in accordance with the requirements of paragraphs (b) through (f) of this section, that attest that the tank system was properly designed and installed and that repairs, pursuant to paragraphs (b) and (d) of this section, were performed. These written statements must also include the certification statement as required in §270.11(d) of this chapter.

[51 FR 25472, July 14, 1986; 51 FR 29430, Aug. 15, 1986, as amended at 71 FR 16905, Apr. 4, 2006]

APPENDIX D

TANK DESIGN DRAWINGS AND SPECIFICATIONS

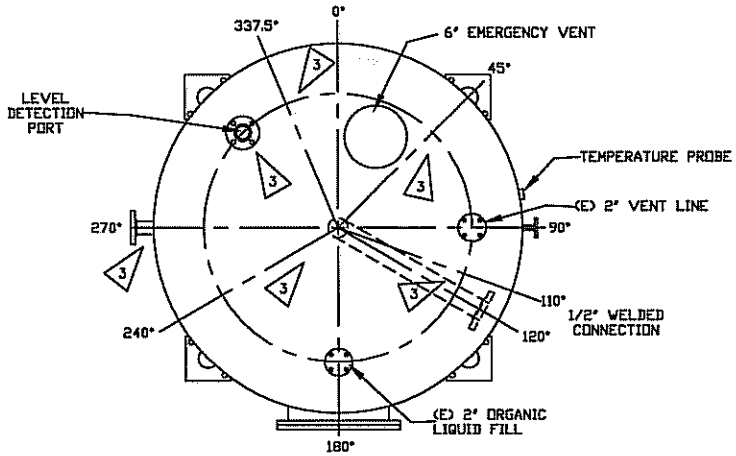

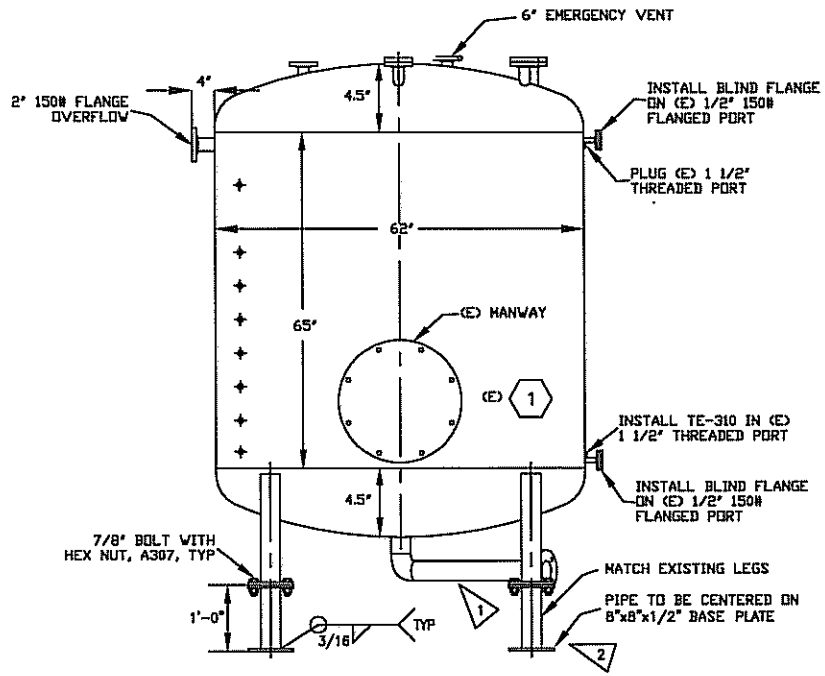

Based On Dwg. No. 32004-M-041 by Meier Enterprises, Inc. Dated 12/20/04

1. REMOVE EXISTING PIPING BACK TO AND INCLUDING TEE. PROVIDE AND INSTALL NEW 90° ELBOW AND PIPE EXTENSION WITH 150# FLANGE AS SHOWN. MATERIAL SHALL BE 3" NOMINAL SCHED 10 PIPE, 304 SS.

2. PROVIDE 12" EXTENSION ON LEGS. EXTENSION SHALL BE 3" NOMINAL SCHED 10 PIPE, 304 SS. PROVIDE WITH 1/2", 304 SS PLATE AT TOP AND BOTTOM. DRILL BOLT PATTERN IN TOP PLATE TO MATCH EXISTING.

3. INSTALL NEW TANK CONNECTION SIZE AND LOCATION AS SHOWN ON PLAN. PROVIDE EACH CONNECTION WITH 150# FLANGE.

TANK DESIGN -- UL142
MATERIAL OF CONSTRUCTION -- SS304
DESIGN PRESSURE -- Atmospheric (0.5 psig pressure and 0.1 psig vacuum)
DIAMETER -- 62 inches
HEIGHT -- 74 inches
VOLUME -- 1,006 gallons (nominal 1,000 gallons)
THICKNESS OF SHELL -- 0.1875" nominal
CORROSION ALLOWANCE -- 0.0625"
TANK WEIGHT -- 1,514 lbs
MATERIAL WEIGHT -- 12,525 lbs
COMPRESSIVE FORCE ON FOOTRES -- 54.8 psi
TANK VENTING -- No conservation vent required.
Tank open to Control Unit.
2" line adequate for normal venting.
Pressure Flow = 1.714 MSCFH
Vacuum Flow = 0.8 MSCFH
EMERGENCY VENTING -- Emergency Flow = 105.134 MSCFH
6" emergency vent

DRAWN BY	CHECKED BY	DATE DRAWN	REVISION #	REVISION DATE
BAH	LF	04-20-11	0	

T-310 AS-BUILT
Pacific EcoSolutions
Mixed Waste Treatment Project
Richland, Washington

FIGURE

APPROX. SCALE: NONE

SCHREIBER & YONLEY ASSOCIATES
ENVIRONMENTAL ENGINEERS

FILE: PFINW/070116/Task 2/NOD Received 8-18-10 Response/Desorber Info/Tank/T-310 As Built

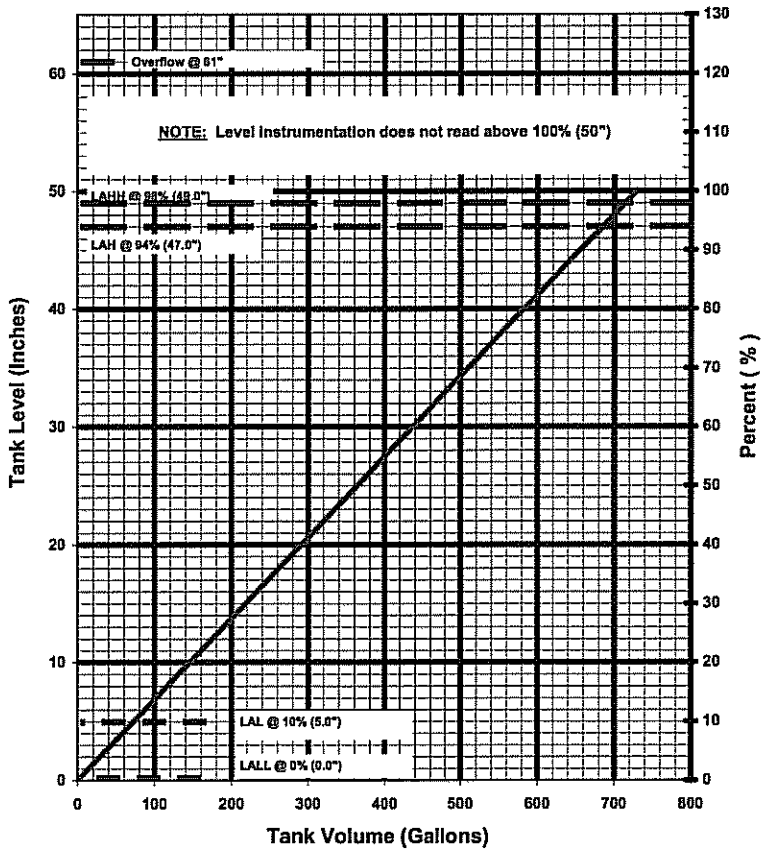
Overflow @ 61"
NOTE: Level instrumentation does not read above 100% (50")
LAHH @ 98% (49.0")
LAH @ 94% (47.0")
LAL @ 10% (5.0")
LALL @ 0% (0.0")
Tank Level (Inches)
Percent (%)
Tank Volume (Gallons)
0
10
20
30
40
50
60
100
200
300
400
500
600
700
800
70
80
90
110
120
130

APPENDIX E

MIXED WASTE CONSTITUENT DATA

Component	Tank AN-105 Concentration mg/L	Tank AZ-101 Concentration mg/L	Tank AN-107 Concentration mg/L
Hold Point Elements			
Aluminum	39700	10670	386
Chloride	9090	200	1830
Potassium	7500	4624	1810
Sodium	233000	108990	195000
Sulfate	a	17670	a
Non-Hold Point Elements			
Calcium	40	a	591
Iron	a	a	1690
Magnesium	5	a	25
Phosphate	570	1503	1110
Silicon	211	a	a
Zinc	10	a	45
Zirconium	a	3.1	70
LDR Elements			
Barium	a	a	7
Cadmium	3	a	64
Chromium	1350	730	176
Lead	53	a	388
Nickel	a	a	530
Selenium	1	a	1
Silver	a	a	14
Additional XRF Elements			
Cerium	a	a	53
Copper	a	a	30
Lanthanum	a	a	46
Manganese	a	a	563
Molybdenum	82	a	36
Neodymium	a	a	96
Additional Constituents			
Ammonium	120	313	22
Boron	51	-	35
Carbonate	12540	23076	83936
Fluoride	190	1813	133
Hydroxide	58100	9030	340
Nitrate	165000	75632	230000
Nitrite	11,1000	65063	61000
Acetate	2070	a	1100
Citric Acid	a	a	8495
Ethylenediaminetetraacetic acid			5620
Formate	2880	a	10400
Glycolate	1150	a	18600
n-Hydroxyethylenediaminetriacetic acid	a	a	2140
Iminodiacetic Acid	a	a	5947
Nitrilotriacetic Acid	a	a	561
Oxalate	610	a	826
Sodium Gluconate	a	a	3927

a) These constituents were not reported in reference 2.

Appendix A.

Hanford Defined Waste List SolidsVol%

March 1996

The Hanford Defined Waste List is a set of wastes that can be used to define all of Hanford's waste types. Implicit within each HDW is a solids and a supernatant fraction. Note that some HDW's are derived from other Defined Wastes, such as BSltCk, for example, are actually a mixture of supernatants from other waste types that have been blended to create a new waste type. The HDW's for four concentrates are derived from the evaporator campaigns from which they were formed—B, T1, R, and BY.

no.	waste type	vol%	comments
	$BiPO_4$ and Uranium Recovery Wastes 1944-56		
1	MW1	12.0	1944-49
2	MW2	12.0	1950-56
3	1C1	13.7	1944-49, includes cladding waste.
4	1C2	24.9	1950-56, includes cladding waste.
5	2C1	6.8	1944-49
6	2C2	3.4	1950-56, includes supernatants formerly cribbed at T-plant.
7	224	3.9	LaF finishing waste.
8	UR	2.8	same as TBP waste.
9	PFeCN1	3.7	Ferrocyanide scavenged UR supernatants in Plant.
10	PFeCN2	3.2	Ferrocyanide scavenged UR supernatants in Plant.
11	TFeCN	1.4	Ferrocyanide scavenged CR Vault.
12	1CFeCN	4.8	Ferrocyanide scavenged 1C supernatants.
	REDOX Wastes 1952-62		
13	R1	4.5	1952-57
14	R2	1.9	1958-66
15	CWR1	8.1	1952-60, aluminum clad fuel.
16	CWR2	2.9	1961-72, aluminum clad fuel with some Zr fuel
	PUREX Wastes 1956-76		
17	P1	2.2	1955-62
18	P2	3.9	1963-67, also called IWW, FP, including Al and Zr clad fuel for this period.
19	P2'		1968-72, assigned to P2, including Al and Zr clad fuel for this period.
20	PL1	2.2	
21	CWP1	8.1	1956-60, Al cladding
22	CWP2	2.9	1961-72, Al cladding
23	CWZr1	10.5	1968-72, Zr cladding-all Zr including Redox and 1966-1967 Zr clad fuel in Purex.
24	OWW1	0.0	1956-62, called CARB, low solids.
25	OWW2	0.0	1963-67, low solids.
26	OWW3	0.0	1968-72, low solids.
27	Z	2.3	derived from analysis of SY-102, 1,910 kgal from 1976-80 sent to TX-118, 1,656 kgal from 1981-86 sent to SY-102.

28	HS	1.2	also SSW, Strontium semiworks.
29	TH1	5.8	1966 thoria
30	TH2	5.8	1970 thoria
31	AR	3.1	"washed" P sludge. Also used to derive SRR.
32	B	0.50	acid waste from PAW, processed through B-Plant for Sr extraction.
33	BL	0.68	low level waste from all B Plant operations.
34	SRR	2.6	strontium recovery waste from sluiced P sludge—based on washed PUREX sludge plus added EDTA, HEDTA, and glycolate.
35	CSR	0.0	waste from cesium recovery from supernatants—not a characteristic waste type, but rather a supernatant from which the 137Cs has been removed. Need only to add citrate to supernatants to track this component.

Other wastes

36	DE	all	Diatomaceous earth added to six tanks.
37	CEM	all	Cement added to only one tank, BY-105.
38	NIT	no solids	Partial Neutralization Feed for evaporator campaigns '77-81.
	Salt Slurry		same as DSS, estimated from chemical model by precipitation (via evaporator). Once again, DSS derives from the supernatants of a variety of wastes following evaporation of water.

Decontamination Waste

39	DW	1.0	decontamination waste, from D&D of plants, but mainly from T Plant operations, mostly Turco residues (phenol, alkyl phosphate esters, hydroxy alkyl amines) with neutralized phosphoric acid.
40	N	1.0	N-Reactor decontamination waste, mainly neutralized phosphoric acid. Concentrates of N are CP (Concentrated Phosphate) waste, which are in AN-106 and AP-102.

Salt Cakes and Salt Slurries

41	BSltCk	Salt cake from 242-B operation, 1951-3, B-106 feed.
42	T1SltCk	Salt cake from 242-T, 1951-6, TX-118 feed.
43	RSltCk	Salt cake from self-concentration in S and SX Farms.
44	BYSltCk	Salt cake blend from ITS in BY Farm, 1965-74.

The following salt cakes were used in HDW rev. 1 and are now replaced by the SMM.

T2SltCk	Salt cake from 242-T, 1965-76, TX-118 feed.
S1SltCk	242-S campaign 1973-6, S-102 feed.
S2SltSlr	242-S campaign, 1977-80, SY-102 feed.
A1SltCk	242-A campaign, 1976-80, A-102 feed.
A2SltSlr	242-A campaign, 1981-88, AW-102 feed.

PUREX Wastes from 1983-88 Campaign

45	P3	3.9	1983-88, now called PXNAW or NCAW.
46	PL2	2.0	1983-88, now called PXMSC, among other things.
47	CWZr2	10.5	1983-88, now called PD or NCRW.
	BP/Cplx83-88		1983-88, was SSR, CSR, B, BL now it's all in A101.
	BP/NCplx83-88		1983-88, assigned to BL, now in AY-102
48	PASF	0.6	PUREX Ammonia Scrubber Feed, never before seen.

Appendix B.

HDW Compositions Spreadsheet
May 1996

Among the columns are each of the forty-eight Hanford Defined Wastes (HDW's), with some other columns for former wastes or blended waste inputs. Most waste definitions begin with amount, exposure, and radionuclide content of fuel processed. The chemicals added list along with the fuel information then determines the total species. Next, the sludge and supernatant compositions, both in mol/L, are calculated based on information about the solids concentration, solids volumes, and solids fraction precipitated from the total species list. The sludge and supernatant concentrations are also provided in ppm, and finally, there is information about the volumes of supernatant feed for various evaporator and reprocessing campaigns.

The sludge and supernatant compositions are determined by the solubility of each species as well as the solids volume per cent parameter (vol% solids) that is established for each waste type. The solids precipitated are shown in later rows as molarity within sludge layer, volume of pure solids, and fraction of total species precipitated. Solubilities are set by adjusting the fraction precipitated parameter until the supernatant molarity reaches the target value. This can be performed by hand or by a macro routine that has been written to do the entire spreadsheet.

Speadsheet contents:

campaign information.....B-2 to B-4

chemicals added (mol/L).....B-5 to B-7

species total concentration (mol/L).....B-8 to B-10

sludge species (mol/L).....B-11 to B-13

supernatant species (mol/L).....B-14 to B-16

solids concentration in layer (mol/L).....B-17 to B-19

solids volumes (cc/L).....B-20 to B-22

solids fraction precipitated.....B-23 to B-25

sludge concentration (ppm).....B-26 to B-28

supernatant concentration (ppm).....B-29 to B-31

supernatant volumes to evaporator campaigns (kgal).....B-32 to B-34

	1	2	3	4	5	6	7	8	9	10	11	12	13	14	15	16	17	18	19	20	21	22	23
	MW1	MW2	1C1	1C2	2C1	2C2	224	UR/TBP	PFeCN1	PFeCN2	TFeCN	1CFeCN	R1	R2	CWR1	CWR2	P1	P2	P2'	PL1	CWP1	CWP2	CWZr1
st.date	1944	1950	1944	1950	1944	1950	1952	1952	1955	1955	1955	1955	1952	1959	1952	1961	1956	1963	1968	1968	1956	1961	1968
en.date	1949	1956	1949	1956	1949	1956	1956	1958	1958	1958	1958	1958	1958	1967	1960	1967	1962	1967	1972	1976	1960	1967	1972
short tons fuel	3,676	4,904	3,676	4,904	3,676	4,904							11,905	9,554	13,660	7,799	30,236	27,016	16,449	16,449	18,141	54,583	977
kgal waste input								35,574															
volume factor								0.65	0.37	0.58	0.33												
kgal waste out	15,325	20,551	11,767	16,531	8,962	22,727	8,300	23,090	13,179	20,537	11,602	3,818	25,067	10,690	2,975	1,752	26,502	10,208	397	1,325	6,276	22,286	1,650
gal/ton	4,169	4,191	3,201	3,371	2,438	4,634		6,621	total waste rate				2,106	1,119	218	225	877	378	24	81	346	408	1,689
		35,876		28,298																			
avg. MWD/T	232	439											661	661	661	661	661	661	923		661	687	1600
g Pu-239*/MWD	0.76	0.76											0.76	0.76	0.76	0.76	0.76	0.76	0.64		0.76	0.76	0.64
kg Pu-239*	648	1,636											5,981	4,800			15,189	13,572	9,717		9,113	28,499	1,000
Pu* ex. %	99	99	99	98.6	98.6	99	99.6						99.6	99.6	99.6	99.6	99.6	99.6	99.6		99.6	99.6	99
res. kg Pu-239*	6.48	16.36	6.48	22.91	9.07	16.36	6.54	7.43	4.24	6.61			23.92	19.20	43.12	19.20	60.76	54.29	38.87		36.45	114.00	10.00
Pu-239* µCi/L	6.82	12.83	8.88	22.33	16.32	11.60	12.71	5.18	5.18	5.18			15.38	28.94	233.59	176.60	36.95	85.71	525.41		93.61	82.44	97.72
(* Pu-239 is U-233 for TH waste)																							
then																							
MCi Cs-137	2.48	6.25											22.84	18.33	26.20	14.96	58.00	51.83	37.10		34.80	108.83	3.82
MCi Sr-90	2.14	5.40											19.72	15.83	22.63	12.92	50.09	44.76	32.05		30.05	93.99	3.30
kCi Tc-99	0.30	0.76	0.00	0.00	0.00	0.00							2.76	2.22	3.17	1.81	7.01	6.26	4.48	0.00	4.21	13.15	0.46
Ci I-129	0.61	1.54											5.62	4.51			14.28	12.76	9.14				
1994																							
MCi Cs-137	0.83	2.44											9.33	9.00	10.95	7.51	25.98	26.64	21.39		15.23	54.66	2.20
MCi Sr-90	0.66	1.96											7.54	7.37	8.86	6.16	21.13	21.89	17.73		12.37	44.84	1.83
	1.19	0.00	0.01	0.02	0.00	0.00	0.00	2.11	0.17	0.27	0.00	0.00	3.23	1.38	0.04	0.02	3.41	1.31	0.00	0.13	0.05	0.18	0.01
	0.02	0.00	0.00	0.00	0.00	0.00	0.00	0.05	0.00	0.01	0.00	0.00	4.76	5.98	0.00	0.00	0.12	4.20		0.00	0.00	0.00	0.00
kgal solids	1839	2466	1612	4116	609	773	324	647	403	719	156	183	1128	203	241	51	583	398	15	43	508	646	173
vol% solids	12	12	13.7	24.9	6.8	3.4	3.9	2.8	3.7	3.2	1.4	4.8	4.5	1.9	8.1	2.9	2.2	3.9	3.9	2.2	8.1	2.9	10.5
uncertainty			2.6	1.1	2	1							3	1.3	1.4	0.5	1.7	3	3		1.4	0.5	1
kgal solids left	736		1731.9	1406.9	762.24	821.51	322	636	359	437	112	119	1206	202	241	51	4	81	0	14	366	598	40
				2387.9	kgal lost to B and T1																		
	MW1	MW2	1C1	1C2	2C1	2C2	224	UR	PFeCN1	PFeCN2	TFeCN	1CFeCN	R1	R2	CWR1	CWR2	P1	P2	P2	PL1	CWP1	CWP2	CWZr1

	24	25	26	27	28	29	30	31	32	33				36	37	38		39	40
	OWW1	OWW2	OWW3	Z	HS	TH1	TH2	AR	B	BL	SRR	CSR in	CSR	DE	CEM	NIT	Salt Slurry	DW	N
st.date	1956	1963	1968	1974	1962	1966	1970	1967	1967	1967	1969	1967	1967	1970	1977	1977	1967	1967	1976
en.date	1962	1967	1972	1988	1967	1966	1970	1976	1972	1976	1976	1976	1976	1972	1977	1980	1976	1976	1990
short tons fuel	30,236	27,016	16,449			191	390		16,449										
kgal waste input								7,826			801	21,744	21,744			640	19,244	5,737	1,814
volume factor											4.81		1.16				0.85		
kgal waste out	4,543	10,563	8,094	1,656	1003	927	428	5,796	10,569	14,845	3,854		25,321	254	8	640	16,357	8,805	2,157
gal/ton	150	391	492	only SY-102		4,853	1,097		643										
				1,910 to TX-118										BX-102	BY-105				
avg. MWD/T						1.7	1606							SX-113					
g Pu-239*/MWD						0.74	0.74							U-104					
kg Pu-239*						0.2403	463.49							TX-116					
Pu* ex. %						99.6	99.6							TX-117					
res. kg Pu-239*				57.9		0.001	1.854		25.924		127.99			TY-106					
Pu-239* µCi/L				563.48		0.0026	10.872		6.1565		83.351								
(* Pu-239 is U-23						(* Pu is U-233 for TH waste)													
then																			
MCi Cs-137						0.00	1.77												
MCi Sr-90						0.00	1.53												
kCi Tc-99						0.00	0.21												
Ci I-129						0.00	0.44												
1994																			
MCi Cs-137						0.00	1.02	0.22	12.80	0.00	0.71	51.83	4.66						
MCi Sr-90					0.95	0.00	0.85	8.24	4.05	3.69	4.43								
	0.00	0.00	0.00		0.93	0.00	0.06	0.75	1.36	1.91	1.33		6.70						
	0.00	0.00	0.00		0.82	0.00	0.79	7.43	2.65	1.78	3.16		0.00	20.95					
kgal solids	27	116	49	82	12	54	25	180	53	101	100		253	254	8				
vol% solids	0.6	1.1	0.6	2.3	1.2	5.8	5.8	3.1	0.5	0.68	2.6	2	1			0			
uncertainty																			
kgal solids left				82	12	54	25	166	23	100	101		7						
	OWW1	OWW2	OWW3	Z	HS	TH1	TH2	AR	B	BL	SRR		CSR					DW	N

		41		42		43				44									45	46	47			48
	B in	B-SltCk	T1 in	T1-SltCk	R in	RSltCk	T2 in	T2-SltCk	BY in	BY-SltCk	S1 in	S1-SltCk	S2 in	S2-SltSlr	A1 in	A1-SltCk	A2 in	A2-SltSlr	P3	PL2	CWZr2	BP/Cplx	BP/NCplx	PASF
st.date	1951	1951	1951	1951	1952	1952	1965	1965	1965	1965	1973	1973	1977	1977	1977	1977	1981	1981	1983	1983	1983	1983	1983	1983
en.date	1955	1955	1955	1955	1965	1965	1976	1976	1974	1974	1976	1976	1980	1980	1980	1980	1989	1989	1988	1988	1988	1988	1988	1988
short tons fuel																			4,302	4,302	4,302			
kgal waste input	8,078	8,078	11,918	11,918	15,743	15,743	43,311	43,311	36,602	36,602	43,709	43,709	9,105	9,105	16,476	16,476								
volume factor	0.55	0.55	0.56	0.56	0.49	0.49	0.25	0.25	0.22	0.22	0.26	0.26	0.39	0.39	0.28	0.28								
kgal waste out	4,445	4,445	6,675	6,675	7,706	7,706	10,828	10,828	8,124	8,124	11,364	11,364	3,562	3,562	4,668	4,668			1,132	11,499	5,555	1,044	6,841	4,227
gal/ton																			263	2,673	1,291	243	1,590	983
avg. MWD/T																			1,163	1,163	1,163			
g Pu-239*/MWD																			0.74	0.74	0.74			
kg Pu-239*																			3,702		3,702			
Pu* ex. %																			99.6		99			
res. kg Pu-239*		0.7163		0.8247		9.7324		45.934		43.438		50.824		12.922		18.237		0	14.81		37.02			
Pu-239* µCi/L																			210.85		107.42			
(* Pu-239 is U-23																								
then																								
MCi Cs-137																			14.14	14.14	14.14			
MCi Sr-90																			12.21	12.21	12.21			
kCi Tc-99																			1.71	1.71	1.71	0.00	0.00	
Ci I-129																			3.48					
1994																								
MCi Cs-137																			11.63	11.63	11.63			
MCi Sr-90																			9.90	9.90	9.90			
kgal solids		786		764		1065		5997		3978		6270		3243		2125		895	44	230	583	83	32	25.362
vol% solids		9.73		6.41						10.87		14.34				12.90			3.9	2	10.5	7.9502	0.4678	0.6
uncertainty																			1	0.6	2			
kgal solids left		855		767		1065		5997		3978		6270		3243		2125		895	44	192	583	83	32	25.362
	964.65		1423.2	1C2 solids input																				
		BSltCk		T1SltCk		RSltCk		T2SltCk		BYSltCK		S1SltCk		S2SltSlr		A1SltCk		A2AltS	P3	PL2	CWZr2	ass.SRR	ass.BL	PASF

	FMJ		FMJ		FMJ		Lucas	HW-30399	HW-30399	B&S	B&S		CUWP	CUWP	FMJ		CUWP	FMJ		FMJ	FMJ	FMJ	FMJ
chemicals in mol/L	MW1	MW2	1C1	1C2	2C1	2C2	224	UR/TBP	PFeCN1	PFeCN2	TFeCN	1CFeCN	R1	R2	CWR1	CWR2	P1	P2	P2'	PL1	CWP1	CWP2	CWZr1
HNO3	0.1	0.1	0.5	0.5	1.15	0.605	1.06	3.3	3.3	3.3	2.3	0.5	2.3	4	0.8	0.8	0.28	0.55	0.55	2.7	0.6	0.6	0.01
NaAlO2			0.233	0.233							0.02828	0.1864	0.65	1.13	2	0.78					1.2	0.78	
Al(NO3)3																							
Fe(HSO4)2			0.03	0.03	0.024	0.0126		0.03	0.014	0.014		0.002	0.0075	0.013			0.0198	0.0774		0.026			
Fe(NO3)3	0.016	0.016	0.016	0.016	0.016	0.016	0.016	0.016	0.016	0.016			0.04	0.04	0.0152	0.0152	0.04	0.04	0.04	0.04	0.0152	0.0152	0.0152
NaCrO4	0.0032	0.0032	0.0052	0.0052	0.0042	0.0054	0.0041	0.0032	0.0032	0.0032		0.002	0.068	0.113	0.003	0.003	0.008	0.008	0.008	0.008	0.003	0.003	0.00304
BiPO4			0.014	0.014	0.01	0.0053	0.0062		0.013	0.013		0.014											
ZrO(OH)2			0.004	0.004								0.004											0.1
NiSO4	0.0016	0.0016	0.0016	0.0016	0.0016	0.0016	0.0016	0.0016	0.005	0.005	0.01	0.01	0.004	0.004	0.0015	0.0015	0.004	0.004	0.004	0.004	0.0015	0.0015	0.00152
NaOH	0.1412	0.1412	0.89	0.6712	1.3062	0.7383	1.2912	3.4512	3.6112	3.6012	2.34	0.84	2.11	3.888	0.4386	0.6786	0.628	1.128	0.328	2.943	0.2786	0.4786	0.24864
NaNO2			0.174	0.174							0.17	0.17			1.4	0.28	0.01	0.01	0.01	0.01	0.78	0.28	0.007
Na2CO3	0.6	0.7	0.0181	0.0181	0.0182	0.0181	0.0182	0.2	0.01843	0.018432	0.021	0.009	0.0183	0.0185	0.0181	0.0181	0.0181	0.0181	0.018	0.018353	0.018	0.0181	0.01803
Na3PO4	0.18	0.18	0.3	0.32	0.2	0.1052	0.043	0.13	0.13	0.13	0.13	0.150065								0.096			
Na2SO4	0.21	0.21						0.08	0.15	0.15													
Na2SiO3	0.004	0.004			0.037	0.0195							0.0147	0.0424	0.03		0.0469	0.0921			0.02		
Na2SiF6			0.038	0.038					0.035	0.035		0.038											
NaF					0.22	0.1157	0.31																0.77
NaCl	0.0032	0.0032	0.0205	0.0154	0.03	0.017	0.0297	0.10238	0.08306	0.082828	0.05382	0.01932	0.0485	0.0894	0.0101	0.0156	0.0144	0.0259	0.0075	0.067689	0.0064	0.011	0.00572
Na2S											0.006	0.006											
La(NO3)3							0.015																
Hg(NO3)2			2E-05	2E-05											0.0003	0.0003					0.0002	0.0002	0.00022
KNO3	0.0007	0.0007	0.0045	0.0034	0.0065	0.0037	0.2665	0.01726	0.01806	0.018006	0.0117	0.0042	0.0106	0.0194	0.0022	0.0034	0.0031	0.0056	0.0016	0.014715	0.0014	0.0024	0.22124
Ca(NO3)2	0.018	0.018	0.0181	0.0181	0.0182	0.0181	0.0182	0.01841	0.01843	0.018432	0.02	0.02	0.0183	0.0185	0.0181	0.0181	0.0181	0.0181	0.018	0.018353	0.018	0.0181	0.01803
KMnO4							0.0046																
Sr(NO3)2							0.063																
PbSO4															0.011	0.011				6.00E-05	0.011	0.011	
H3C6H5O7																							
H4EDTA																							
H3HEDTA																							
Hglycolate																							
Hacetate																							
H2oxalate							0.03																
Na4Fe(CN)6									0.005	0.0025	0.005	0.005											
NH3																							0.77
Pu (µCi/L)	10.26		8.88	22.33	16.32	11.60	12.71	4.01267	1.87	1.87		23.56	15.38	28.94	233.59	176.60	36.95	85.71		154	93.61	82.44	97.72
U (M)	0.2421	0.2408	0.0008	0.0007	0.0001	5E-05		0.0078	0.0078	0.0078	0.0078	0.00079	0.0048	0.009	0.0185	0.018	0.0046	0.0107			0.0117	0.0099	0.00239
Cs (Ci/L)	0.0022		0.0168	0.0351	0.0002	0.0003		0.00106	4.93E-04	4.93E-04	0.025	0.035069	0.10	0.22	0.0039	0.0045	0.259	0.6894		0.03	0.0026	0.0026	0.00141
Sr (Ci/L)	0.0189		0.0001	0.0003	1E-05	6E-05		0.02403	3.44E-03	3.44E-03		0.000314	0.08	0.18	0.0031	0.0037	0.2106	0.5665		0.026	0.0021	0.0021	0.00117

	FMJ	FMJ	HW-30399		HS report	from P	from P	from P	FMJ	FMJ	from P		fr/P	WHC-MR-0302	type 1 Portland Cement	FMJ	model	Lucas	Lucas
chemicals in mol/L	OWW1	OWW2	OWW3	Z	HS	TH1	TH2	AR	B	BL	SRR	CSR in	CSR	DE	CEM	NIT	Salt Slurry	DW	N
HNO3	0.073	0.22	0.782	3.5	0.86	2.57	2.57				0.6					0.8	2.8		
NaAlO2				0.5		0.34	0.34										2.2		
Al(NO3)3									0.083	0.56									
Fe(HSO4)2				0.0007	0.03	0.025	0.025		0.007	0.017	0.041								
Fe(NO3)3	0.04	0.04	0.04	0.04	0.04	0.04	0.04	0.04										0.04	0.04
NaCrO4	0.008	0.008	0.008	0.0094	0.008	0.008	0.008	0.008	0.002	2E-07	0							0.008	0.008
BiPO4																			
ZrO(OH)2																			
NiSO4	0.004	0.004	0.004	0.004	0.004	0.004	0.004	0.004	0.002	0.01	0							0.004	0.004
NaOH	0.2	0.3	0.928	3.628	2.138	2.758	2.758	0	0.5524	2.6944	2.7112		0.2			0.3	3.2	0.138	0.138
NaNO2	0.01	0.01	0.01	0.014	0.01	0.01	0.01		0.01	0.01	0.01		0.01				4.05	0.024	0.014
Na2CO3	0.22	0.4	0.3041	0.2	0.0049	0.0183	0.0183	0.0018	0.0101	0.27	0.25		2E-05				1	0.011	0.011
Na3PO4				0.0001		0.09	0.09	0.02		0.01							0.1		0.36
Na2SO4				0.0014				0.02			0.02						0.03		
Na2SiO3								0.08	0.04	0.05	0.08								
Na2SiF6																			
NaF						0.12	0.12										0.06		
NaCl	0.0046	0.0069	0.0213	0.1144	0.0492	0.0634	0.0634	0	0.0127	0.062	0.0624		0.0046				0.5	0.0032	0.0032
Na2S																			
La(NO3)3																			
Hg(NO3)2																			
KNO3	0.001	0.0015	0.0046	0.0181	0.0887	0.0278	0.0278	0	0.0028	0.0135	0.0136		0.001				0.016	0.0007	0.0007
Ca(NO3)2	0.01802	0.01804	0.0181	0.0184	0.0049	0.0183	0.0183	0.0018	0.0101	0.0103	0.0123		2E-05					0.018	0.018
KMnO4		0.012	0.0009													0.0013			
Sr(NO3)2																			
PbSO4					0.0034				1E-06										
H3C6H5O7					0.04				0.01	0.015			0.025						
H4EDTA					0.08						0.15								
H3HEDTA											0.3		4E-05						
Hglycolate										0.2	0.3								
Hacetate					0.51														
H2oxalate																			
Na4Fe(CN)6																			
NH3																			
Pu (µCi/L)				625				300	132	65	127.99		61.685				0		
U (M)						0.0021	0.0094		0.0063	0.0078	0.03		0						
Cs (Ci/L)						0.0001	0.6298	0.01	0.32		0.0487		0.0487				0.5		
Sr (Ci/L)					0.25	0.0001	0.522	0.3757	0.1861	0.0657	0.3038		0.0697				0.005		

chemicals in mol/L	B in	B-SltCk	T1 in	T1-SltCk	R in	RSltCk	T2 in	T2-SltCk	BY In	BY-SltCk	S1 in	S1-SltCk	S2 in	S2-SltSlr	A1 in	A1-SltCk	A2 In	A2-SltSlr	P3	PL2	CWZr2	BP /Cplx	BP /NCplx	PASF
HNO3	0.03		0.03																0.41	0.1	0.01			
NaAlO2																			0.34					
Al(NO3)3																								
Fe(HSO4)2																			0.0674					
Fe(NO3)3																			0.05	0.04	0.04			0.01
NaCrO4																				0.008				
BiPO4																								
ZrO(OH)2																					0.1			
NiSO4																				0.004				
NaOH	0.09		0.09		0.04		0		0		0		0		0		0		2.2	0.17	0.2			0.04
NaNO2																			0.01	0.01	0.007			
Na2CO3												0							0.0183	0.12	0.018			0.0095
Na3PO4																				0.0695				
Na2SO4																								
Na2SiO3																			0.0921					
Na2SiF6																								
NaF																			0.03		0.77			
NaCl																			0.0506	0.0039	0.0046			0.0009
Na2S																								
La(NO3)3																								
Hg(NO3)2																					0.0002			
KNO3																			0.011	0.0009	0.221			0.0002
Ca(NO3)2																			0.0183	0.018	0.018			0.018
KMnO4																				0.006				
Sr(NO3)2																								
PbSO4																				4E-05				
H3C6H5O7																								
H4EDTA																								
H3HEDTA																								
Hglycolate																								
Hacetate																								
H2oxalate																								
Na4Fe(CN)6																								
NH3																					0.77			0.05
Pu (µCi/L)	8.0261	14.586	9.8518	17.59	22.291	45.54	19.222	76.89	21.902	98.676	20.791	79.965	23.831	60.915	21.579	76.163	0	0	210.85	4.6411	107.42			
U (M)																			0.0384	######	0.0031			
Cs (Ci/L)	0.0095	0.0172	0.0097	0.0173	0.1448	0.2959	0.0652	0.2607	0.0432	0.1947	0.0896	0.3447	0.224	0.5725	0.1188	0.4192	0	0	2.7149	0.03	0.0022			
Sr (Ci/L)	0.0121	0.0219	0.0127	0.0227	0.0321	0.0656	0.0251	0.1004	0.018	0.081	0.0326	0.1254	0.0239	0.061	0.022	0.0777	0	0	2.3108	0.026	0.0019			

species mol/L	MW1	MW2	1C1	1C2	2C1	2C2	224	UR/TBP	PFeCN1	PFeCN2	TFeCN	1CFeCN	R1	R2	CWR1	CWR2	P1	P2	P2'	PL1	CWP1	CWP2	CWZr1
Na	2.3156	2.5156	2.3349	2.171	2.2708	1.2672	1.8003	4.50678	4.51432	4.494092	3.0561	1.793916	2.9425	5.3422	3.9479	1.7935	0.7905	1.3925	1.0043	3.353395	2.3442	1.5888	1.07046
Al	0	0	0.233	0.233	0	0	0	0	0	0	0.02828	0.1864	0.65	1.13	2	0.78	0	0	0	0	1.2	0.78	0
Fe	0.016	0.016	0.046	0.046	0.04	0.0286	0.016	0.046	0.03	0.03	0	0.002	0.0475	0.053	0.0152	0.0152	0.0598	0.1174	0.04	0.066	0.0152	0.0152	0.0152
Cr	0.0032	0.0032	0.0052	0.0052	0.0042	0.0054	0.0041	0.0032	0.0032	0.0032	0	0.002	0.068	0.113	0.003	0.003	0.008	0.008	0	0.008	0.003	0.003	0.00304
Bi	0	0	0.014	0.014	0.01	0.0053	0.0062	0	0.013	0.013	0	0.014	0	0	0	0	0	0	0	0	0	0	0
La							0.015																
Hg	0	0	2E-05	2E-05	0	0	0	0	0	0	0	0	0	0	0.0003	0.0003	0	0	0	0	0.0002	0.0002	0.00022
ZrO(OH)2	0	0	0.004	0.004	0	0	0	0	0	0	0	0.004	0	0	0	0	0	0	0	0	0	0	0.1
Pb	0	0	0	0	0	0	0	0	0	0	0	0	0	0	0.011	0.011	0	0	0	0.00006	0.011	0.011	0
Ni	0.0016	0.0016	0.0016	0.0016	0.0016	0.0016	0.0016	0.0016	0.005	0.005	0.01	0.01	0.004	0.004	0.0015	0.0015	0.004	0.004	0	0.004	0.0015	0.0015	0.00152
Sr							0.063																
Mn	0	0	0	0	0	0	0.0046	0	0	0	0	0	0	0	0	0	0	0	0	0	0	0	0
Ca	0.018	0.018	0.0181	0.0181	0.0182	0.0181	0.0182	0.01841	0.01843	0.018432	0.02	0.02	0.0183	0.0185	0.0181	0.0181	0.0181	0.0181	0.018	0.018353	0.018	0.0181	0.01803
K	0.0007	0.0007	0.0045	0.0034	0.0065	0.0037	0.2711	0.01726	0.01806	0.018006	0.0117	0.0042	0.0106	0.0194	0.0022	0.0034	0.0031	0.0056	0	0.014715	0.0014	0.0024	0.22124
balance	0	0	0	-4E-16	-9E-16	2E-16	4E-16	-1.8E-15	-9E-16	-8.9E-16	4.4E-16	-8.9E-16	-2E-15	0	2E-15	9E-16	-2E-16	0		0	9E-16	0	2.2E-16
density																							
vol%solids	12	12	13.7	24.9	6.8	3.4	3.9	2.8	3.7	3.2	1.4	4.8	4.5	1.9	8.1	2.9	2.2	3.9	3.9	2.2	8.1	2.9	10.5
void frac.	0.3577	0.2292	0.6948	0.7906	0.7704	0.9437	0.8339	0.91417	0.93451	0.923005	0.89558	0.925071	0.7988	0.5737	0.6508	0.7629	0.8413	0.8077	0.7832	0.861767	0.8339	0.7631	0.85731
species																							
OH	1.5064	1.4989	1.1055	0.8865	0.1496	0.1427	0.2106	0.1808	0.1468	0.1368	0.19991	0.884338	2.7033	4.9011	7.762	3.1186	0.3878	0.5967	0.3646	0.249	4.5608	3.0701	0.66514
NO3	0.1847	0.1847	0.5887	0.5876	1.2408	0.6928	1.5818	3.40208	3.40292	3.40287	2.3517	0.5442	2.4671	4.1764	0.8846	0.8858	0.4393	0.7119	0.7077	2.871421	0.6835	0.6845	0.31334
NO2	0	0	0.174	0.174	0	0	0	0	0	0	0.17	0.17	0	0	1.4	0.28	0.01	0.01	0.01	0.01	0.78	0.28	0.007
CO3	0.6	0.7	0.0181	0.0181	0.0182	0.0181	0.0182	0.2	0.01843	0.018432	0.021	0.009	0.0183	0.0185	0.0181	0.0181	0.0181	0.0181	0	0.018353	0.018	0.0181	0.01803
PO4	0.18	0.18	0.314	0.334	0.21	0.1105	0.0492	0.13	0.143	0.143	0.13	0.164065	0	0	0	0	0	0	0	0.096	0	0	0
SO4	0.2116	0.2116	0.0616	0.0616	0.0496	0.0269	0.0016	0.1416	0.183	0.183	0.016	0.02	0.019	0.03	0.0125	0.0125	0.0436	0.1588	0.2348	0.05606	0.0125	0.0125	0.00152
SiO3	0.004	0.004	0.038	0.038	0.037	0.0195	0	0	0.035	0.035	0	0.038	0.0147	0.0424	0.03	0	0.0469	0.0921	0.0921	0	0.02	0	0
F	0	0	0.228	0.228	0.22	0.1157	0.31	0	0.21	0.21	0	0.228	0	0	0	0	0	0	0	0	0	0	0.77
Cl	0.0032	0.0032	0.0205	0.0154	0.03	0.017	0.0297	0.10238	0.08306	0.082828	0.05382	0.01932	0.0485	0.0894	0.0101	0.0156	0.0144	0.0259	0	0.067689	0.0064	0.011	0.00572
C6H5O7	0	0	0	0	0	0	0	0	0	0	0	0	0	0	0	0	0	0	0	0	0	0	0
EDTA	0	0	0	0	0	0	0	0	0	0	0	0	0	0	0	0	0	0	0	0	0	0	0
HEDTA	0	0	0	0	0	0	0	0	0	0	0	0	0	0	0	0	0	0	0	0	0	0	0
glycolate	0	0	0	0	0	0	0	0	0	0	0	0	0	0	0	0	0	0	0	0	0	0	0
acetate																							
oxalate	0	0	0	0	0	0	0.03	0	0	0	0	0	0	0	0	0	0	0	0	0	0	0	0
DBP								3E-05															
butanol								3E-05															
NH3	0	0	0	0	0	0	0	0	0	0	0	0	0	0	0	0	0	0	0	0	0	0	0.77
Fe(CN)6----	0	0	0	0	0	0	0	0	0.005	0.0025	0.005	0.005	0	0	0	0	0	0	0	0	0	0	0
Pu-239 (µCi/L)	10.262	0	8.8772	22.332	16.318	11.602	12.708	4.01267	1.86574	1.86574	0	23.55986	15.38	28.943	233.59	176.6	36.947	85.708	0	154	93.609	82.437	97.718
U-238 (M)	0.2421	0.2408	0.0008	0.0007	0.0001	5E-05	0	0.0078	0.0078	0.0078	0.0078	0.00079	0.0048	0.009	0.0185	0.018	0.0046	0.0107	0.037	0	0.0117	0.0099	0.00239
Cs-137 (Ci/L)	0.0022	0	0.0168	0.0351	0.0002	0.0003	0	0.00106	0.00049	0.000493	0.025	0.035069	0.0983	0.2224	0.0039	0.0045	0.259	0.6894	0	0.03	0.0026	0.0026	0.00141
Sr-90 (Ci/L)	0.0189	0	0.0001	0.0003	1E-05	6E-05	0	0.02403	0.00344	0.003444	0	0.000314	0.0794	0.1821	0.0031	0.0037	0.2106	0.5665	0	0.026	0.0021	0.0021	0.00117

species mol/L	OWW1	OWW2	OWW3	Z	HS	TH1	TH2	AR	B	BL	SRR	CSR in	CSR	DE	CEM	NIT	Salt Slurry	DW	N
Na	0.6626	1.1249	1.5756	4.6691	2.215	3.6061	3.6061	1.4859	0.6772	3.4364	3.4836	3.9938	4.2085			0.3	12.37	0.1952	1.2652
Al	0	0	0	0.5	0	0.34	0.34	0.0234	0.083	0.56	0	0.4169	0.4169			0	2.2	0	0
Fe	0.04	0.04	0.04	0.0407	0.07	0.065	0.065	0.0423	0.007	0.017	0.041	0.0054	0.0054			0	0	0.04	0.04
Cr	0.008	0.008	0.008	0.0094	0.008	0.008	0.008	0.017	0.002	2E-07	0	0.0282	0.0282			0	0	0.008	0.008
Bi	0	0	0	0	0	0	0	1E-05	0	0	0	0.0001	0.0001			0	0	0	0
La												2E-09	2E-09						
Hg	0	0	0	0	0	0	0	4E-07	0	0	0	1E-06	1E-06			0	0	0	0
ZrO(OH)2	0	0	0	0	0	0	0	4E-07	0	0	0	7E-05	7E-05			0	0	0	0
Pb	0	0	0	0	0.0034	0	0	6E-05	1E-06	0	0	0.0002	0.0002			0	0	0	0
Ni	0.004	0.004	0.004	0.004	0.004	0.004	0.004	0.0061	0.002	0.01	0	0.0049	0.0049			0	0	0.004	0.004
Sr												8E-10	8E-10						
Mn	0	0.012	0.0009	0	0	0	0	0.0027	0	0	0	0.0038	0.0038			0.0013	0	0	0
Ca	0.01802	0.01804	0.0181	0.0184	0.0049	0.0183	0.0183	0.0121	0.0101	0.0103	0.0123	0.0244	0.0245			0		0.018	0.018
K	0.001	0.0135	0.0055	0.0181	0.0887	0.0278	0.0278	0.0074	0.0028	0.0135	0.0136	0.0199	0.0209			0.0013	0.016	0.0007	0.0007
balance	0	2.2E-16	0	0	-4E-16	9E-16	0	2E-16	0	0	0	2E-06	0.0011			-6E-17	4E-15	-6E-17	0
density																			
vol%solids	0.6	1.1	0.6	2.3	1.2	5.8	5.8	3.1	0.5	0.68	2.6	2	1	100	100	13.6	80	1	1
void frac.	0.62713	0.80232	0.6254	0.549	0.8226	0.9349	0.9349	0.8307	0.8459	0.5749	0.8505	0.352	0.6426	0.6	0.6	1	0.8	0.7152	0.7152
species																			
OH	0.159	0.172	0.1824	2.1649	0.33	1.5678	1.6116	0.2857	0.5611	2.4791	0.4501	2.0198	2.1447			-0.494	9.2	0.17	0.17
NO3	0.23005	0.37757	0.9429	3.675	1.0785	2.7545	2.7545	0.5075	0.2719	1.7141	0.6382	1.4502	1.4503			0.8	2.816	0.1567	0.1567
NO2	0.01	0.01	0.01	0.014	0.01	0.01	0.01	0.2588	0.01	0.01	0.01	1.0136	1.0236			0	4.05	0.024	0.014
CO3	0.22	0.4	0.3041	0.2	0.0049	0.0183	0.0183	0.1483	0.0101	0.27	0.25	0.2409	0.2409			0	1	0.011	0.011
PO4	0	0	0	0.0001	0	0.09	0.09	0.0233	0	0.01	0	0.0136	0.0136			0	0.1	0	0.36
SO4	0.004	0.004	0.004	0.0068	0.0674	0.054	0.054	0.0814	0.016	0.044	0.102	0.1279	0.1279			0	0.03	0.004	0.004
SiO3	0	0	0	0	0	0	0	0.1032	0.04	0.05	0.08	0.0665	0.0665			0	0	0	0
F	0	0	0	0	0	0.12	0.12	0.0004	0	0	0	0.0061	0.0061			0	0.06	0	0
Cl	0.0046	0.0069	0.0213	0.1144	0.0492	0.0634	0.0634	0.0178	0.0127	0.062	0.0624	0.0682	0.0728			0	0.5	0.0032	0.0032
C6H5O7	0	0	0	0	0.04	0	0	0	0.01	0.015	0	0.0029	0.0279			0	0	0	0
EDTA	0	0	0	0	0.08	0	0	0	0	0	0.15	0.0005	0.0005			0	0	0	0
HEDTA	0	0	0	0	0	0	0	0	0	0	0.3	0.001	0.001			0	0	0	0
												0	0						
glycolate	0	0	0	0	0	0	0	0	0	0.2	0.3	0.0064	0.0064			0	0	0	0
acetate					0.51							9E-05							
oxalate	0	0	0	0	0	0	0	0	0	0	0	2E-09	2E-09			0	0	0	0
DBP	0.06061	0.02329	0.0185		0	0.0019	0.0083				3E-05	0.0177	0.0177						
butanol	0.06061	0.02329	0.0185		0	0.0019	0.0083				3E-05	0.0177	0.0177						
												0	0						
NH3	0	0	0	0	0	0	0	0.0084	0	0	0	0.0254	0.0254			0	0	0	0
Fe(CN)6----	0	0	0	0	0	0	0	0	0	0	0	0	0			0	0	0	0
Pu-239 (µCi/L)	0	0	0	625	0	0	0	322.29	132	65	127.99	61.685	61.685						
U-238 (M)	0	0	0	0	0	0.0021	0.0094	0.0029	0.0063	0.0078	0.03	0.0082	0.0082			0	0	0	0
Cs-137 (Ci/L)	0	0	0	0	0	0.0001	0.6298	0.2749	0.32	0	0.0487	0.6297	0.0487						
Sr-90 (Ci/L)	0	0	0	0	0.25	0.0001	0.522	0.3997	0.1861	0.0657	0.3038	0.0697	0.0697						

species mol/L	B in	B-SltCk	T1 in	T1-SltCk	R in	RSltCk	T2 in	T2-SltCk	BY in	BY-SltCk	S1 in	S1-SltCk	S2 in	S2-SltSlr	A1 in	A1-SltCk	A2 in	A2-SltSlr	P3	PL2	CWZr2	BP/Cplx	BP/NCplx	PASF
Na	3.1929	5.8025	3.1021	5.5387	3.4059	6.9581	2.6637	10.655	2.3512	10.593	3.4069	13.104	6.8238	17.443	3.9404	13.908		0	2.8514	0.6405	1.0176			0.0599
Al	0.1562	0.2839	0.1265	0.2259	0.7514	1.5351	0.2964	1.1858	0.4146	1.8678	0.4867	1.8721	0.9807	2.5069	0.5662	1.9983		0	0.34	0	0			0
Fe	0.0209	0.0379	0.0152	0.0272	0.002	0.0041	0.002	0.008	0.002	0.0089	0.0019	0.0071	0.0012	0.003	0.0018	0.0063		0	0.1174	0.04	0.04			0.01
Cr	0.0041	0.0075	0.0039	0.007	0.0281	0.0573	0.0117	0.0468	0.0089	0.0401	0.0187	0.0718	0.0212	0.0542	0.0135	0.0475		0	0	0.008	0			0
Bi	0.0063	0.0114	0.0049	0.0088	4E-06	8E-06	0.0005	0.0019	0.0002	0.001	0.0004	0.0016	0.0022	0.0057	0.0016	0.0056		0	0	0	0			0
La	0	0	0	0	2E-11	3E-11	3E-10	1E-09	8E-07	4E-06	5E-06	2E-05	1E-05	3E-05	4E-06	2E-05		0						
Hg	9E-06	2E-05	7E-06	1E-05	7E-07	1E-06	3E-06	1E-05	5E-06	2E-05	3E-06	1E-05	9E-06	2E-05	7E-06	2E-05		0	0	0	0.0002	0	0	0
ZrO(OH)2	0.0017	0.0032	0.0017	0.003	2E-06	4E-06	0.0003	0.0013	8E-05	0.0003	0.0003	0.001	0.0015	0.0039	0.0014	0.0049		0	0	0	0.1			0
Pb	0	0	0	0	0.0001	0.0002	0.0002	0.001	0.0008	0.0036	0.0003	0.0012	0.0009	0.0022	0.0005	0.0016		0	0	4E-05	0			0
Ni	0.0016	0.0029	0.0016	0.0029	0.0018	0.0036	0.0017	0.0068	0.0017	0.0075	0.0017	0.0065	0.0014	0.0036	0.0016	0.0055		0	0	0.004	0			0
Sr	0	0	0	0	5E-12	1E-11	1E-10	4E-10	3E-07	1E-06	2E-06	7E-06	3E-06	9E-06	1E-06	5E-06		0						
Mn	0	0	0	0	3E-05	6E-05	0.0008	0.0031	0.0008	0.0037	0.001	0.0038	0.0009	0.0023	0.0011	0.0037		0	0	0.006	0			0
Cu	0.0129	0.0234	0.0117	0.0209	0.009	0.0184	0.009	0.0362	0.009	0.0405	0.0088	0.034	0.0075	0.0191	0.0086	0.0305		0	0.0183	0.018	0.018			0.018
K	0.011	0.0199	0.0107	0.019	0.014	0.0286	0.0109	0.0436	0.0096	0.0431	0.0154	0.0592	0.0401	0.1025	0.042	0.1483		0	0.011	0.0069	0.221			0.0002
balance		9E-16		-2E-15		2E-05		0.0006		0.0009		0.0011		0.0017		0.0011		0	-9E-16	1E-16	2E-16			3E-17
density	1.1201		1.1167		1.1787		1.1201		1.1167		1.1611		1.3236		1.1862									
vol%solids	50	17.683	50	11.446	50	13.82	50	55.385	50	48.966	50	55.173	50	99	50	45.523		90	3.9	2	10.5			0.6
void frac.	1	0.7496	1	0.731	1	0.8732	1	0.7922	1	0.779	1	0.7221	1	0.5624	1	0.6159		0.5	0.789	0.8882	0.8503			0.7842
species														0.5668										
OH	0.0759	1.2737	0.0874	1.0595	0.0601	6.2633	0.1279	5.2547	0.1142	7.9855	0.1626	8.114	0.2924	10.775	0.2135	8.7466		0	3.3127	0.1348	0.6088			0.04
NO3	1.6353	2.9719	1.5868	2.8332	1.5385	3.1432	1.269	5.0762	1.0144	4.5701	1.3938	5.3607	1.912	4.8875	1.2217	4.3119		0	0.6075	0.2569	0.3875			0.0662
NO2	0.2097	0.3811	0.2151	0.3841	1.0207	2.0853	0.442	1.7678	0.4427	1.9943	0.7619	2.9305	1.8671	4.7725	0.8988	3.1724		0	0.01	0.01	0.007			0
CO3	0.1032	0.1875	0.1117	0.1995	0.012	0.0245	0.1091	0.4365	0.0979	0.4412	0.1258	0.4837	0.2667	0.6816	0.152	0.5367		0	0.0183	0.12	0.018			0.0095
PO4	0.2166	0.3937	0.1948	0.3479	0.0003	0.0005	0.0351	0.1406	0.0174	0.0785	0.0332	0.1279	0.13	0.3324	0.0792	0.2796		0	0	0.0695	0			0
SO4	0.1024	0.1861	0.1028	0.1835	0.0243	0.0497	0.0645	0.2581	0.0486	0.219	0.0779	0.2994	0.2238	0.5722	0.1154	0.4074		0	0.1348	0.004	0			0
SiO3	0.0185	0.0336	0.0174	0.0311	0.0231	0.0471	0.0178	0.0711	0.0124	0.0557	0.021	0.0809	0.0287	0.0733	0.0276	0.0973		0	0.0921	0	0			0
F	0.111	0.2018	0.1085	0.1938	0.0002	0.0005	0.0264	0.1056	0.0151	0.0682	0.0223	0.0857	0.1276	0.3262	0.1187	0.4188		0	0.03	0	0.77			0
Cl	0.0619	0.1125	0.0606	0.1082	0.0642	0.1312	0.0494	0.1975	0.0323	0.1455	0.0591	0.2273	0.1126	0.2878	0.0643	0.2269		0	0.0506	0.0039	0.0046			0.0009
C6H5O7	0	0	0	0	0.0002	0.0005	0.0049	0.0195	0.0061	0.0275	0.0085	0.0328	0.0212	0.0541	0.0104	0.0369		0	0	0	0			0
EDTA	0	0	0	0	9E-06	2E-05	0.003	0.0118	0.0014	0.0062	0.0044	0.017	0.0129	0.0329	0.01	0.0352		0	0	0	0			0
HEDTA	0	0	0	0	7E-06	1E-05	0.0057	0.023	0.0002	0.0008	0.0083	0.0321	0.0241	0.0616	0.0176	0.0623		0	0	0	0			0
	0	0	0	0	0	0	0	0	0	0	0	0	0	0	0	0		0						
glycolate	0	0	0	0	0.0003	0.0006	0.0176	0.0703	0.0043	0.0193	0.0263	0.101	0.0691	0.1765	0.0374	0.132		0	0	0	0			0
acetate	0	0	0	0	3E-05	7E-05	0.0006	0.0022	0.0081	0.0367	0.0015	0.0059	0.0052	0.0133	0.0073	0.0259		0	0	0	0			0
oxalate	0	0	0	0	1E-11	3E-11	3E-10	1E-09	7E-07	3E-06	4E-06	2E-05	9E-06	2E-05	4E-06	1E-05		0	0	0	0			0
DBP	2E-05	3E-05	2E-05	3E-05	0.0002	0.0004	0.0038	0.0154	0.0065	0.0292	0.0059	0.0227	0.0154	0.0393	0.0086	0.0305		0		0.0034				
butanol	2E-05	3E-05	2E-05	3E-05	0.0002	0.0004	0.0038	0.0154	0.0065	0.0292	0.0059	0.0227	0.0154	0.0393	0.0086	0.0305		0		0.0034				
	0	0	0	0	0	0	0	0	0	0	0	0	0	0	0	0		0						
NH3	0.0006	0.0012	0.0007	0.0012	0.0192	0.0349	0.0073	0.0133	0.0065	0.0118	0.0116	0.021	0.0141	0.0255	0.0856	0.1555		0	0	0	0.77			0.05
Fe(CN)6----	0	0	0	0	0	0	0	0	0	0	0	0	0	0	0	0		0	0	0	0			0
Pu-239 (µCi/L)	8.0261	14.586	9.8518	17.59	22.291	45.54	19.222	76.89	21.902	98.676	20.791	79.965	23.831	60.915	21.579	76.163		0	210.85	4.6411	107.42			0
U-238 (M)	0.0024	0.0044	0.0025	0.0044	0.004	0.0081	0.003	0.012	0.0033	0.0147	0.0033	0.0129	0.0027	0.0068	0.0026	0.0093		0	0.0384	0.0005	0.0031			0
Cs-137 (Ci/L)	0.0095	0.0172	0.0097	0.0173	0.1448	0.2959	0.0652	0.2607	0.0432	0.1947	0.0896	0.3447	0.224	0.5725	0.1188	0.4192		0	2.7149	0.03	0.0022			0
Sr-90 (Ci/L)	0.0121	0.0219	0.0127	0.0227	0.0321	0.0656	0.0251	0.1004	0.018	0.081	0.0326	0.1254	0.0239	0.061	0.022	0.0777		0	2.3108	0.026	0.0019			0

pred. sludge mol/L	MW1	MW2	1C1	1C2	2C1	2C2	224	UR/TBP	PFeCN1	PFeCN2	TFeCN	1CFeCN	R1	R2	CWR1	CWR2	P1	P2	P2'	PL1	CWP1	CWP2	CWZr1
Na	5.0398	6.4895	4.8766	3.5567	4.174	1.1981	4.5209	3.572	3.96609	3.807152	3.43732	2.282215	2.3718	3.1868	7.8429	1.3777	1.8323	4.0314	0	2.829563	1.9815	1.2208	5.54806
Al	0	0	0.4753	0.8616	0	0	0	0	0	0	0.16498	0.432775	4.1433	4.771	11.209	5.8587	0	0		0	5.1545	5.8588	0
Fe(total)	0.1187	0.1187	0.3232	0.1787	0.5608	0.7851	0.361	1.57339	0.89386	0.95509	0.35714	0.106169	1.0131	2.6862	0.165	0.4571	2.6294	2.9608		2.911055	0.1649	0.4571	0.12771
Cr	0.0012	0.0008	0.0038	0.0043	0.0033	0.0051	0.0034	0.00293	0.003	0.002961	0	0.001857	0.8741	4.3989	0.002	0.0023	0.0068	0.0065	0	0.006915	0.0026	0.0023	0.00265
Bi	0	0	0.077	0.0442	0.0922	0.0411	0.0604	0	0.24726	0.285269	0	0.212333	0	0	0	0	0	0		0	0	0	0
La	0	0	0	0	0	0	0.2368	0	0	0	0	0	0	0	0	0	0	0		0	0	0	0
Hg	0	0	0.0001	6E-05	0	0	0	0	0	0	0	0	0	0	0.0041	0.011	0	0		0	0.0025	0.0059	0.002
ZrO(OH)2	0	0	0.0103	0.007	0	0	0	0	0	0	0	0.023833	0	0	0	0	0	0		0	0	0	0.9268
Pb	0	0	0	0	0	0	0	0	0	0	0	0	0	0	0.1177	0.3257	0	0		5.19E-05	0.1176	0.3257	0
Ni	0.0006	0.0004	0.0012	0.0013	0.0013	0.0015	0.0013	0.00147	0.13682	0.129858	0.65166	0.191316	0.0507	0.1176	0.001	0.0012	0.1018	0.0582		0.101768	0.0013	0.0012	0.00132
Sr	0	0	0	0	0	0	1.5661	0	0	0	0	0	0	0	0	0	0	0		0	0	0	0
Mn	0	0	0	0	0	0	0.0039	0	0	0	0	0	0	0	0	0	0	0		0	0	0	0
Ca	0.0841	0.0841	0.0755	0.0455	0.1437	0.2763	0.2437	0.34504	0.26382	0.303594	0.79434	0.238166	0.2145	0.507	0.1208	0.3219	0.4213	0.2431		0.433908	0.1204	0.321	0.09495
K	0.0003		0.0032	0.0028	0.0051	0.0035	0.2275	0.01581	0.01691	0.016661	0.01049	0.003899	0.0085	0.0112	0.0015	0.0026	0.0027	0.0046		0.01272	0.0012	0.0018	0.19256
balance	4E-15	-2E-04	0	-9E-16	-9E-16	-9E-16	0	-1.8E-15	0	1.78E-15	0	8.88E-16	4E-15	1E-14	0	4E-15	0	-2E-15		0	-4E-15	-4E-15	1.8E-15
density	1.7467	1.7467	1.2909	1.2223	1.2519	1.125	1.3763	1.31537	1.37007	1.374663	1.46546	1.229691	1.4832	2.2124	1.7718	1.6539	1.2761	1.4155		1.32511	1.4113	1.5319	1.26229
vol%solids	12	12	13.7	24.9	6.8	3.4	3.9	2.8	3.7	3.2	1.4	4.8	4.5	1.9	8.1	2.9	2.2	3.9		2.2	8.1	2.9	10.5
void frac.	0.3577	0.2292	0.6948	0.7906	0.7704	0.9437	0.8339	0.91417	0.93451	0.923005	0.89558	0.925071	0.7988	0.5737	0.6508	0.7629	0.8413	0.8077		0.861767	0.8339	0.7631	0.85731
wt.% H2O	44.376	43.437	70.855	74.269	71.419	81.431	55.549	60.0521	60.2034	59.07127	63.36	77.08434	51.958	36.383	24.549	47.995	66.636	59.25		55.35137	57.862	50.992	66.2596
TOC wt.%C	0	0	0	0	0	0	1.1208	0.0003	0.71016	0.409191	1.75469	0.609909	0	0	0	0	0	0		0	0	0	0
free OH-	0.0131	0.0084	0.0604	0.0227	0.0278	0.0594	0.0163	0.02376	0.0314	0.02176	0.04445	0.121907	0.0093	0.0131	0.0099	0.0089	0.1742	0.1675		0.045445	0.0132	0.0091	0.20615
OH-	12.286	12.222	2.6199	3.177	1.7057	2.4091	4.9184	5.55494	2.91987	3.461722	2.77871	1.836831	18.62	37.963	41.724	22.998	8.4259	10.191		8.97387	17.486	21.315	4.285
NO3-	0.0625	0.0467	0.3741	0.3886	0.9692	0.6536	1.3277	2.19038	2.46299	2.417695	0.00948	0.055255	0.0352	9E-09	0.571	0.659	3E-11	2E-14		1.968159	0.5637	0.5164	0.27058
NO2-	0.0092	0	0.179	0.2466	0.002	0.0015	0	0.3693	0.15363	0.166718	2.2522	0.607815	1.9534	1.6065	0.9592	0.2366	0.3793	0.5875		0.453432	0.6734	0.2247	0.00823
CO3--	1.8859	2.6515	0.0755	0.0455	0.1437	0.2763	0.2437	0.51144	0.26382	0.303594	0.79524	0.227953	0.2145	0.507	0.1208	0.3219	0.4213	0.2431		0.433908	0.1204	0.321	0.09495
PO4---	0.3997	0.4001	1.3319	0.8802	1.015	0.1406	0.0965	0.11913	0.36904	0.405556	0.1166	0.439275	0	0	0	0	0	0		0.082982	0	0	0
SO4--	0.082	0.0534	0.0447	0.0514	0.0388	0.0254	0.0013	0.12976	0.17143	0.169327	0.01435	0.018568	0.0153	0.0174	0.0084	0.0096	0.0368	0.1292		0.048458	0.0106	0.0096	0.00132
SiO3--	0.0016	0.001	0.0632	0.0501	0.078	0.0184	0	0	0.06118	0.06541	0	0.117331	0.0119	0.4775	0.0201	0	0.6221	1.5241		0	0.0169	0	0
F-	0	0	0.1653	0.1918	0.1722	0.1094	2.0348	0	0.19672	0.19431	0	0.211677	0	0	0	0	0	0		0	0	0	5.28655
Cl-	0.0013	0.0008	0.0148	0.0129	0.0235	0.0161	0.0249	0.09382	0.07781	0.076639	0.04827	0.017937	0.0391	0.0517	0.0068	0.012	0.0122	0.0211		0.05851	0.0054	0.0085	0.00498
C6H5O7---	0		0	0	0	0	0	0	0	0	0	0	0	0	0	0	0	0		0	0	0	0
EDTA----	0		0	0	0	0	0	0	0	0	0	0	0	0	0	0	0	0		0	0	0	0
HEDTA---	0		0	0	0	0	0	0	0	0	0	0	0	0	0	0	0	0		0	0	0	0
glycolate-	0	0	0	0	0	0	0	0	0	0	0	0	0	0	0	0	0	0	0	0	0	0	0
acetate-	0	0	0	0	0	0	0	0	0	0	0	0	0	0	0	0	0	0	0	0	0	0	0
oxalate--	0	0	0	0	0	0	0.6427	0	0	0	0	0	0	0	0	0	0	0	0	0	0	0	0
DBP	0	0	0	0	0	0	0	2.8E-05	0	0	0	0	0	0	0	0	0	0	0	0	0	0	0
butanol	0	0	0	0	0	0	0	2.8E-05	0	0	0	0	0	0	0	0	0	0	0	0	0	0	0
NH3	4E-06	0	0.0002	0.0006	5E-08	6E-08	0	0.00087	0.00031	0.000372	0.2464	0.031427	0.1316	0.3286	0.0002	6E-05	0.1336	0.2421		0.001745	0.0002	3E-05	0.66013
Fe(CN)6----									0.13514	0.078125	0.35714	0.104167											
Pu-239 (µCi/g)	0.0037	0	0.0059	0.0175	0.0118	0.0105	0.01	0.0032	0.00152	0.001505	0	0.020309	0.0108	0.0137	1.4406	3.0815	0.2752	1.0361		4.279232	0.5815	1.205	0.53949
U-238 (M)	1.9879	1.9775	0.0006	0.0006	8E-05	5E-05	0	0.13974	0.10672	0.122769	0.27524	0.000733	0.0216	0.2682	0.1835	0.4857	0.0314	0.1753	0.0031	0	0.0986	0.2069	0.00208
Cs-137 (Ci/L)	0.0008	0	0.0122	0.0293	0.0002	0.0003	0	0.00134	0.01331	0.015393	1.78571	0.730612	0.0793	0.1865	0.0026	0.0035	0.2186	0.561		0.063172	0.0022	0.002	0.00123
Sr-90 (Ci/L)	0.0073	0	0.0001	0.0003	8E-06	5E-05	0	0.02202	0.00323	0.003187	0	0.000291	1.0433	7.8275	0.0021	0.0029	8.061	13.687		0.022474	0.0018	0.0016	0.00102

pred. sludge mol/L	OWW1	OWW2	OWW3	Z	HS	TH1	TH2	AR	B	BL	SRR	CSR in	CSR	DE	CEM	NIT	Salt Slurry	DW	N
Na	0.41647	0.73565	0.9876	2.0895	1.8258	3.384	3.384	5.6024	2.9631	6.6962	6.4431		9.0004	10.67	0	0.3	12.926	0.996	1.3109
Al	0	0	0	11.008	0	0.7071	0.7071	0.0711	1.2273	6.065	0		0.2688	0.08	1.82	0	2.2875	0	0
Fe(total)	6.33533	3.45659	6.3353	1.6846	5.6687	1.0882	1.0882	1.3018	1.0019	2.2078	1.502		0.3467	0.09	0.53	0	0	4.0014	4.0014
Cr	0.00503	0.00643	0.005	0.0052	0.0066	0.0075	0.0075	0.0142	0.0017	1E-07	0		0.0182	0	0	0	0	0.8057	0.8057
Bi	0	0	0	0	0	0	0	1E-05	0	0	0		8E-05	0	0	0	0	0	0
La	0	0	0	0	0	0	0	0	0	0	0		1E-09	0	0	0	0	0	0
Hg	0	0	0	0	0	0	0	3E-07	0	0	0		8E-07	0	0	0	0	0	0
ZrO(OH)2	0	0	0	0	0	0	0	3E-07	0	0	0		4E-05	0	0	0	0	0	0
Pb	0	0	0	0	0.1516	0	0	5E-05	8E-07	0	0		0.0001	0	0	0	0	0	0
Ni	0.36847	0.20184	0.3685	0.0974	0.1851	0.0397	0.0397	0.139	0.042	1.2076	0		0.3087	0	0	0	0	0.4013	0.4013
Sr	0	0	0	0	0	0	0	0	0	0	0		8E-08	0	0	0	0	0	0
Mn	0	0.28191	0.0006	0	0	0	0	0.0022	0	0	0		0.0025	0	0	0.0013	0	0	0
Ca	1.513	0.83063	1.5276	0.419	0.004	0.1698	0.1698	0.1096	0.222	0.2034	0.1368		1.5248	0.08	20.9	0	0	0.9101	0.9101
K	0.00063	0.01085	0.0035	0.0101	0.0731	0.0261	0.0261	0.0062	0.0023	0.0078	0.0116		0.0135	0	0	0.0013	0.0152	0.0005	0.0005
balance	3.6E-15	-2E-15	4E-15	7E-15	0	0	-2E-15	-2E-15	0	0	0		0.0007	0	-7.1E-15	-6E-17	7E-15	0	4E-15
density	1.55322	1.33755	1.576	1.7282	1.4473	1.2494	1.2879	1.3008	1.4319	1.9866	1.7469		1.689	0.39	1.9	1.0188	1.6393	1.488	1.5
vol%solids	0.6	1.1	0.6	2.3	1.2	5.8	5.8	3.1	0.5	0.68	2.6		1	100	100	13.6	80	1	1
void frac.	0.62713	0.80232	0.6254	0.549	0.8226	0.9349	0.9349	0.8307	0.8459	0.5749	0.8505		0.6426			1	0.8	0.7152	0.7152
wt.% H2O	42.3178	58.19	40.504	28.191	43.568	64.436	65.026	69.261	65.215	33.614	49.218		54.476	-6	8	94.733	43.115	52.516	51.754
TOC wt.%C	0.35321	0.20164	0.106	0	1.408	0.0203	0.0871	0	0.0426	0.1707	2.9914		0.1546			0	0	0	0
free OH-	0.0255	0.03336	0.0401	0.1633	0.0972	0.0358	0.0463	0.0536	0.1742	0.1119	0.1512		0.2813	0	0	-0.494	0.5276	0.037	0.037
OH-	19.7624	11.8978	19.777	38.57	17.766	5.7888	6.3627	4.4605	9.7453	30.989	10.651		5.4651	0	34.73	-0.494	9.4851	15.237	15.237
NO3-	0.14459	0.30359	0.591	1.5381	1E-17	2.5823	4E-07	4E-09	8E-24	0.0009	4E-06		0.9353	0	0	0.8	2.7909	0.1124	0.1124
NO2-	0.00629	0.00804	0.0063	0.0078	0.8973	0.0119	2.5942	0.6399	0.2386	0.9933	0.5534		0.6601	0	0	0	4.2375	0.0172	0.01
CO3--	1.63995	1.05334	1.7068	0.5197	0.004	0.1698	0.1698	0.2233	0.222	0.3531	0.3397		1.6644	0	0	0	1.15	0.9051	0.9051
PO4---	0	0	0	8E-05	0	0.0845	0.0845	0.0195	0	0.0058	0		0.0088	0	0	0	0.0952	0	0.1073
SO4--	0.00251	0.00322	0.0025	0.0038	0.0556	0.0507	0.0507	0.0679	0.0135	0.0254	0.0871		0.0825	0	0.69	0	0.0286	0.4309	0.4309
SiO3--	0	0	0	0	0	0	0	2.267	1.2288	2.3862	1.8027		3.1861	5.67	6.37	0	0	0	0
F-	0	0	0	0	0	0.1126	0.1126	0.0003	0	0	0		0.0039	0	0	0	0.0571	0	0
Cl-	0.00289	0.00555	0.0134	0.0635	0.0405	0.0595	0.0595	0.0148	0.0108	0.0357	0.0532		0.0469	0	0	0	0.59	0.0023	0.0023
C6H5O7---	0	0	0	0	0.033	0	0	0	0.0085	0.0086	0		0.018	0	0	0	0	0	0
EDTA----	0	0	0	0	0.0659	0	0	0	0	0	0.1281		0.0003	0	0	0	0	0	0
HEDTA---	0	0	0	0	0	0	0	0	0	0	0.2561		0.0007	0	0	0	0	0	0
											0		0	0					
glycolate-	0	0	0	0	0	0	0	0	0	0.1153	0.2561		0.0041	0	0	0	0	0	0
acetate-	0	0	0	0	0.4204	0	0	0	0	0	0		0	0	0	0	0	0	0
oxalate--	0	0	0	0	0	0	0	0	0	0	0		1E-09	0	0	0	0	0	0
DBP	0.0381	0.01873	0.0116	0	0	0.0018	0.0078	0	0	0	3E-05		0.0114	0	0	0			
butanol	0.0381	0.01873	0.0116	0	0	0.0018	0.0078	0	0	0	3E-05			0	0	0	0	0	0
NH3	0	0	0	0	0.4455	1E-07	0.7179	0.1929	0.1426	0.0883	0.1148		0.0164	0	0	0	0	0	0
Fe(CN)6----																			
Pu-239 (µCi/g)	0	0	0	14.99	0	0	0	7.2753	14.277	2.6118	2.1827		1.878	0	0	0	0	0	0
U-238 (M)	0	0	0	0	0	0.002	0.0977	0.0024	0.4604	0.5604	1.0033		0.4122			0	0	0	0
Cs-137 (Ci/L)	0	0	0	0	0	0.0001	0.591	0.2295	0.2709	0	0.0416		0.0314	0	0	0	0	0	0
Sr-90 (Ci/L)	0	0	0	0	18.034	0.0001	8.4474	11.83	30.458	4.7022	8.2565		0.0449	0	0	0	0	0	0

pred. sludge mol/L	B in	B-SltCk	T1 in	T1-SltCk	R in	RSltCk	T2 in	T2-SltCk	BY in	BY-SltCk	S1 in	S1-SltCk	S2 in	S2-SltSlr	A1 in	A1-SltCk	A2 in	A2-SltSlr	P3	PL2	CWZr2	BP/Cplx	BP/NCplx	PASF
Na		9.1685		9.2907		8.8549		12.092		12.404		14.83		17.121		16.035		0	5.1709	0.5701	5.5017	0	0	0.0471
Al		0.2227		0.1704		1.3643		1.0616		2.1458		2.0478		2.5146		2.4507		0	0.8618	0	0			0
Fe(total)		0.205		0.2221		0.017		0.014		0.0161		0.0125		0.003		0.0127		0	2.9608	1.9019	0.3639			1.3352
Cr		0.0059		0.0053		0.2276		0.0594		0.0507		0.1048		0.0545		0.0661		0	0	0.0071	0	0	0	0
Bi		0.046		0.0455		8E-06		0.0017		0.0009		0.0013		0.0057		0.0074		0	0	0	0			0
La		0		0		3E-11		3E-09		3E-06		2E-05		3E-05		1E-05		0	0	0	0			0
Hg		5E-05		4E-05		1E-06		9E-06		4E-05		1E-05		2E-05		4E-05		0	0	0	0.0021			0
ZrO(OH)2		0.0039		0.0033		4E-06		0.0011		0.0003		0.0008		0.0039		0.0071		0	0	0	0.9268			0
Pb		0		0		0.0002		0.0009		0.0057		0.001		0.0022		0.0012		0	0	4E-05	0			0
Ni		0.0081		0.0114		0.0151		0.0113		0.0135		0.0108		0.0036		0.0103		0	0	0.1118	0			0
Sr		0		0		9E-11		1E-09		4E-06		2E-05		2E-05		1E-05		0	0	0	0			0
Mn		0		0		5E-05		0.0048		0.0033		0.0059		0.0023		0.0056		0	0	0.0053	0			0
Ca		0.0906		0.1134		0.0768		0.0599		0.0734		0.0566		0.0193		0.0572		0	0.2464	0.4598	0.0949			1.5089
K		0.0156		0.0143		0.0254		0.039		0.0377		0.0504		0.1017		0.1107		0	0.0088	0.0061	0.1909			0.0002
balance		2E-15		-4E-15		1E-05		0.0005		0.0008		0.0009		0.0017		0.0008		0	0	9E-16	0			0
density		1.5284		1.5535		1.491		1.5859		1.6179		1.7217		1.7997		1.7829		0.5	1.7786	1.1827	1.2763			1.217
vol%solids		17.683		11.446		13.82		55.385		48.966		55.173		99		45.523		90	3.9	2	10.5			0.6
void frac.		0.7496		0.731		0.8732		0.7922		0.779		0.7221		0.5624		0.6159		0.5	0.789	0.8882	0.8503			0.7842
wt.% H2O		55.646		57.172		50.215		40.126		37.378		30.542		26.057		28.906		100	49.287	74.594	64.507			75.533
TOC wt.%C		0.0002		0.0002		0.0066		0.5382		0.4515		0.6976		1.4025		0.9431		0	0	0.0369	0			0
free OH-		0.0182		0.0559		0.0035		0.3198		0.3234		0.3294		0.5795		0.4563		0	1.1328	0.0146	0.0916			0.0126
OH-		1.5579		1.4523		6.3202		4.8447		9.2009		8.9542		10.803		10.571		0	18.137	5.9355	4.8794			4.0133
NO3-		3.7697		3.0877		5.2908		6.9463		6.4132		7.4723		4.9071		6.1492		0	2E-14	0.2175	0.3335			0.052
NO2-		0.2989		0.2897		1.8533		1.5827		1.7421		2.5866		4.7857		2.8607		0	0.4913	0.02	0.0073			0
CO3--		0.2193		0.248		0.0822		0.4625		0.5015		0.5259		0.6837		0.6351		0	0.2464	0.5505	0.0949			1.5022
PO4---		1.4019		1.6888		0.0005		0.1326		0.0685		0.1091		0.3341		0.4282		0	0	0.0619	0			0
SO4--		0.146		0.1384		0.0442		0.2311		0.1913		0.2554		0.574		0.4244		0	0.1072	0.0036	0			0
SiO3--		0.0316		0.0234		0.1287		0.1061		0.0783		0.1252		0.0737		0.1753		0	1.5246	0	0			0
F-		0.1583		0.1461		0.0004		0.0945		0.0596		0.0731		0.1442		0.1505		0	0.0239	0	5.2878			0
Cl-		0.0882		0.0816		0.1166		0.1353		0.1271		0.1254		0.1025		0.1076		0	0.0403	0.0035	0.004			0.0007
C6H5O7---		0		0		0.0004		0.0175		0.024		0.028		0.0537		0.0275		0	0	0	0			0
EDTA----		0		0		2E-05		0.0106		0.0054		0.0145		0.0326		0.0263		0	0	0	0			0
HEDTA---		0		0		1E-05		0.0206		0.0007		0.0274		0.0611		0.0465		0	0	0	0			0
glycolate-		0		0		0.0006		0.0629		0.0169		0.0861		0.1752		0.0986		0	0	0	0			0
acetate-		0		0		6E-05		0.002		0.032		0.0051		0.0132		0.0193		0	0	0	0			0
oxalate--		0		0		3E-11		1E-09		3E-06		1E-05		2E-05		1E-05		0	0	0	0			0
DBP		2E-05		2E-05		0.0004		0.0137		0.0255		0.0193		0.039		0.0227		0	0	0.003	0			0
butanol		2E-05		2E-05		0.0004		0.0137		0.0255		0.0193		0.039		0.0227		0	0	0.003	0			0
NH3		0.0009		0.0009		0.031		0.0119		0.0103		0.0179		0.0253		0.1161		0	0.1972	1E-05	0.6547			0.0392
Fe(CN)6----																								
Pu-239 (µCi/g)		0.0095		0.011		0.0972		0.0766		0.107		0.0746		0.0351		0.0763		0	2.6321	0.004	0.6063			0
U-238 (M)		0.006		0.0076		0.0339		0.0189		0.0258		0.0207		0.0069		0.0158		0	0.8848	0.0004	0.0027			0
Cs-137 (Ci/L)		0.0218		0.0189		0.2912		0.2453		0.2156		0.3271		0.5686		0.3433		0	4.4532	0.0267	0.0019			0
Sr-90 (Ci/L)		0.0172		0.0171		0.2627		0.1556		0.1299		0.2017		0.0613		0.1351		0	58.413	0.0231	0.0016			0

pred. su mol/L	MW1	MW2	1C1	1C2	2C1	2C2	224	UR/TBP	PFeCN1	PFeCN2	TFeCN	1CFeCN	R1	R2	CWR1	CWR2	P1	P2	P2'	PL1	CWP1	CWP2	CWZr1
Na	1.88193	1.8947	1.924	1.703	2.1284	1.26964	1.6899	3.90735	3.89187	3.88171	3.04054	1.758423	2.969	3.9578	3.6046	1.8059	0.767	1.2854		3.283444	2.3761	1.5998	0.54515
Al(OH)4 -	0	0	0.195	0.025	0	0	0	0	0	0	0.02634	0.173978	0.485	1.0595	1.1884	0.6283	0	0		0	0.8515	0.6283	0
Fe	0.002	0.002	0.002	0.002	0.002	0.002	0.002	0.002	0.002	0.002	0	0.002	0.002	0.002	0.002	0.002	0.002	0.002		0.002001	0.002	0.002	0.002
Cr	0.00347	0.0035	0.005	0.005	0.0043	0.00542	0.0041	0.00321	0.00321	0.00321	0	0.002007	0.03	0.03	0.0031	0.0031	0.008	0.0081		0.008024	0.0031	0.0031	0.00309
Bi	0	0	0.004	0.004	0.004	0.004	0.004	0	0.004	0.004	0	0.004	0	0	0	0	0	0		0	0	0	0
La	0	0	0	0	0	0	0.006	0	0	0	0	0	0	0	0	0	0	0		0	0	0	0
Hg	0	0	1E-05	1E-05	0	0	0	0	0	0	0	0	0	0	1E-05	1E-05	0	0		0	1E-05	1E-05	1E-05
Zr	0	0	0.003	0.003	0	0	0	0	0	0	0	0.003	0	0	0	0	0	0		0	0	0	0.003
Pb	0	0	0	0	0	0	0	0	0	0	0	0	0	0	0.0016	0.0016	0	0		6.02E-05	0.0016	0.0016	0
Ni	0.00173	0.0018	0.002	0.002	0.0016	0.0016	0.0016	0.0016	0.0018	0.0018	0.0018	0.0018	0.002	0.0018	0.0016	0.0015	0.0018	0.0018		0.001801	0.0015	0.0015	0.00154
Sr	0	0	0	0	0	0	0.002	0	0	0	0	0	0	0	0	0	0	0		0	0	0	0
Mn	0	0	0	0	0	0	0.0046	0	0	0	0	0	0	0	0	0	0	0		0	0	0	0
Ca	0.009	0.009	0.009	0.009	0.009	0.009	0.009	0.00901	0.00901	0.00901	0.00901	0.009	0.009	0.009	0.009	0.009	0.009	0.009		0.009005	0.009	0.009	0.00901
K	0.00076	0.0008	0.005	0.004	0.0066	0.0037	0.2728	0.0173	0.0181	0.01805	0.01172	0.004215	0.011	0.0196	0.0023	0.0034	0.0032	0.0057		0.01476	0.0014	0.0024	0.22461
balance	-2E-16	-2E-16	2E-16	-0	0	4.4E-16	0	-4.4E-16	-4E-16	-4E-16	0	-2.2E-16	-0	0	-4E-16	0	0	-2E-16		0	7E-16	2E-16	0
density	1.07097	1.0715	1.085	1.066	1.0803	1.0473	1.0639	1.14809	1.14739	1.14715	1.11664	1.077022	1.147	1.2242	1.2199	1.1124	1.026	1.0457		1.12398	1.1497	1.1046	1.01711
vol%solids	12	12	13.7	24.9	6.8	3.4	3.9	2.8	3.7	3.2	1.4	4.8	4.5	1.9	8.1	2.9	2.2	3.9		2.2	8.1	2.9	10.5
void frac.	0.35772	0.2292	0.695	0.791	0.7704	0.94368	0.8339	0.91417	0.93451	0.923	0.89558	0.925071	0.799	0.5737	0.6508	0.7629	0.8413	0.8077		0.861767	0.8339	0.7631	0.85731
wt.% H2O	89.0129	88.902	87.74	88.98	85.492	91.1927	84.728	73.5572	73.2867	73.3076	78.1582	88.95057	78.53	73.832	76.881	86.416	94.864	91.551		76.37869	83.498	87.892	95.1018
TOC wt.%C	0	0	0	0	0	0	0.0116	0.00038	0	0	0	0	0	0	0	0	0	0		0	0	0	0
species	excludes hydroxide bound to Al																						
OH-	0.03651	0.0366	0.087	0.029	0.0361	0.06294	0.0195	0.02599	0.0336	0.02357	0.04963	0.131782	0.012	0.0229	0.0152	0.0116	0.207	0.2073		0.052735	0.0158	0.0119	0.24047
NO3-	0.18099	0.2036	0.568	0.545	1.2591	0.69335	1.5921	2.58276	2.77089	2.77089	2.35514	0.545644	1.623	1.5533	0.8902	0.8759	0.1976	0.1567		2.584803	0.6836	0.6821	0.31676
NO2-	0.01918	0	0.228	0.259	0.0014	0.00082	0	0.21724	0.02911	0.02911	0.17025	0.171134	0.867	1.2467	1.4609	0.298	0.2533	0.5707		0.225228	0.7999	0.2891	0.00845
CO3--	0.39353	0.3944	0.009	0.009	0.009	0.009	0.009	0.19103	0.00901	0.00901	0.01001	-0.00204	0.009	0.009	0.009	0.009	0.009	0.009		0.009005	0.009	0.009	0.00901
PO4---	0.15004	0.15	0.15	0.15	0.1501	0.10941	0.0473	0.13031	0.13432	0.13432	0.13019	0.150066	0	0	0	0	0	0		0.096293	0	0	0
SO4--	0.22927	0.2332	0.064	0.065	0.0504	0.0269	0.0016	0.14194	0.18344	0.18345	0.01602	0.020072	0.019	0.0302	0.0129	0.0126	0.0438	0.16		0.056231	0.0127	0.0126	0.00154
SiO3--	0.00433	0.0044	0.034	0.034	0.034	0.0195	0	0	0.03399	0.03399	0	0.034	0.015	0.034	0.0309	0	0.034	0.034		0	0.0203	0	0
F-	0	0	0.238	0.24	0.2235	0.11596	0.24	0	0.21051	0.21052	0	0.228823	0	0	0	0	0	0		0	0	0	0.24012
Cl-	0.00352	0.0036	0.021	0.016	0.0305	0.01701	0.0299	0.10262	0.08326	0.08303	0.0539	0.01939	0.049	0.0902	0.0104	0.0157	0.0145	0.0261		0.067895	0.0065	0.0111	0.00581
C6H5O7---	0	0	0	0	0	0	0	0	0	0	0	0	0	0	0	0	0	0		0	0	0	0
EDTA----	0	0	0	0	0	0	0	0	0	0	0	0	0	0	0	0	0	0		0	0	0	0
HEDTA---	0	0	0	0	0	0	0	0	0	0	0	0	0	0	0	0	0	0		0	0	0	0
	0	0	0	0	0	0	0	0	0	0	0	0	0	0	0	0	0	0		0	0	0	0
glycolate-	0	0	0	0	0	0	0	0	0	0	0	0	0	0	0	0	0	0		0	0	0	0
acetate-	0	0	0	0	0	0	0	0	0	0	0	0	0	0	0	0	0	0		0	0	0	0
oxalate--	0	0	0	0	0	0	0.0051	0	0	0	0	0	0	0	0	0	0	0		0	0	0	0
DBP	0	0	0	0	0	0	0	3E-05	0	0	0	0	0	0	0	0	0	0		0	0	0	0
butanol	0	0	0	0	0	0	0	3E-05	0	0	0	0	0	0	0	0	0	0		0	0	0	0
	0	0	0	0	0	0	0	0	0	0	0	0	0	0	0	0	0	0		0	0	0	0
NH3	9.6E-05	0	5E-04	0.001	8E-08	4.7E-08	0	0.00081	1.5E-05	1.5E-05	0	3.94E-06	0.015	0.0274	0.0008	0.0001	0.0069	0.025		0.000815	0.0003	7E-05	0.78171
Fe(CN)6----	0	0	0	0	0	0	0	0	0	0	0	0	0	0	0	0	0	0		0	0	0	0
Pu-239 (µCi/g)	11.1186	0	9.265	23.56	16.577	11.6247	12.791	4.02233	1.87027	1.87035	0	23.6449	15.52	29.18	29.991	30	30.018	30.018		30.0121	30.029	30.029	30.0176
U-238 (M)	0.004	0.004	8E-04	8E-04	0.0001	5.5E-05	0	0.004	0.004	0.004	0.004	0.000792	0.004	0.004	0.004	0.004	0.004	0.004	0.004	0	0.004	0.004	0.00243
Cs-137 (Ci/L)	0.00235	0	0.018	0.037	0.0002	0.00028	0	0.00105	0	0	0	0	0.099	0.2231	0.004	0.0046	0.2599	0.6946		0.029254	0.0026	0.0026	0.00143
Sr-90 (Ci/L)	0.02053	0	2E-04	3E-04	1E-05	5.8E-05	0	0.02409	0.00345	0.00345	0	0.000315	0.034	0.034	0.0032	0.0037	0.034	0.034		0.026079	0.0021	0.0021	0.00119

pred. su mol/L	OWW1	OWW2	OWW3	Z	HS	TH1	TH2	AR	B	BL	SRR	CSR in	CSR	DE	CEM	NIT	Salt Slurry	DW	N
Na	0.66409	1.12565	1.5791	3.8061	2.2197	3.6198	3.6198	1.3542	0.6658	3.4141	3.4046		4.1601			0.3	10.147	0.1957	0.636
Al(OH)4 -	0	0	0	0.2526	0	0.3174	0.3174	0.0219	0.0772	0.5223	0		0.4184			0	1.85	0	0
Fe	0.002	0.002	0.002	0.002	0.002	0.002	0.002	0.002	0.002	0.002	0.002		0.002			0	0	0.002	0.002
Cr	0.00802	0.00802	0.008	0.0095	0.00802	0.008	0.008	0.0171	0.002	2E-07	0		0.0283			0	0	0.008	0.008
Bi	0	0	0	0	0	0	0	1E-05	0	0	0		0.0001			0	0	0	0
La	0	0	0	0	0	0	0	0	0	0	0		2E-09			0	0	0	0
Hg	0	0	0	0	0	0	0	4E-07	0	0	0		1E-06			0	0	0	0
Zr	0	0	0	0	0	0	0	4E-07	0	0	0		7E-05			0	0	0	0
Pb	0	0	0	0	0.0016	0	0	6E-05	1E-06	0	0		0.0002			0	0	0	0
Ni	0.0018	0.0018	0.0018	0.0018	0.0018	0.0018	0.0018	0.0018	0.0018	0.0018	0		0.0018			0	0	0.0018	0.0018
Sr	0	0	0	0	0	0	0	0	0	0	0		8E-10			0	0	0	0
Mn	0	0.009	0.0009	0	0	0	0	0.0027	0	0	0		0.0038			0.0013	0	0	0
Ca	0.009	0.009	0.009	0.009	0.00491	0.009	0.009	0.009	0.009	0.009	0.009		0.0093			0	0	0.009	0.009
K	0.001	0.01353	0.0055	0.0183	0.08888	0.0279	0.0279	0.0074	0.0028	0.0135	0.0136		0.021			0.0013	0.019	0.0007	0.0007
balance	1.1E-16	-2E-16	2E-16	1E-15	-1E-15	0	0	-7E-16	-1E-16	-4E-16	0		0.0011			-6E-17	4E-15	0	0
density	1.02463	1.04215	1.059	1.1579	1.08258	1.1592	1.159	1.052	1.0276	1.1634	1.1267		1.1808	1	1	1.0188	1.5052	1.0067	1.0234
vol%solids	0.6	1.1	0.6	2.3	1.2	5.8	5.8	3.1	0.5	0.68	2.6		1			13.6	80	1	1
void frac.	0.62713	0.80232	0.6254	0.549	0.82257	0.9349	0.9349	0.8307	0.8459	0.5749	0.8505		0.6426			1	0.8	0.7152	0.7152
wt.% H2O	94.6986	92.3315	88.776	74.379	82.2641	74.482	76.861	90.678	95.597	77.458	73.58		74.065			94.733	51.848	98.281	95.973
TOC wt.%C	0.85377	0.32255	0.2522	0	2.28832	0.0234	0.1035	0	0.0701	0.5069	5.4534		0.4166			0	0	0	0
species																			
OH-	0.04067	0.04158	0.0641	0.2974	0.11822	0.0383	0.0495	0.0645	0.2059	0.1947	0.1778		0.4377			-0.494	0.6595	0.0517	0.0517
NO3-	0.23056	0.37839	0.945	2.8016	1.00502	2.7635	0.9408	0.3215	0.151	1.6343	0.5262		1.4555			0.8	2.9166	0.1572	0.1572
NO2-	0.01002	0.01002	0.01	0.0141	0.0858	0.0114	1.8341	0.4488	0.1311	0.0948	0.1246		1.0273			0	3.3	0.0241	0.014
CO3--	0.21143	0.39094	0.2956	0.1925	0.00491	0.009	0.009	0.1459	0.009	0.2694	0.2476		0.2265			0	0.4	0.002	0.002
PO4---	0	0	0	0.0001	0	0.0903	0.0903	0.0235	0	0.01	0		0.0136			0	0.119	0	0.1501
SO4--	0.00401	0.00401	0.004	0.0069	0.06754	0.0542	0.0542	0.0818	0.016	0.0441	0.1024		0.1283			0	0.0357	0.004	0.004
SiO3--	0	0	0	0	0	0	0	0.034	0.034	0.034	0.034		0.035			0	0	0	0
F-	0	0	0	0	0	0.1205	0.1205	0.0004	0	0	0		0.0061			0	0.0714	0	0
Cl-	0.00461	0.00692	0.0214	0.1156	0.04928	0.0637	0.0637	0.0179	0.0127	0.0622	0.0626		0.073			0	0.14	0.0032	0.0032
C6H5O7---	0	0	0	0	0.04009	0	0	0	0.01	0.015	0		0.028			0	0	0	0
EDTA----	0	0	0	0	0.08017	0	0	0	0	0	0.1506		0.0005			0	0	0	0
HEDTA---	0	0	0	0	0	0	0	0	0	0	0.3012		0.001			0	0	0	0
	0	0	0	0	0	0	0	0	0	0	0		0			0	0	0	0
glycolate-	0	0	0	0	0	0	0	0	0	0.2006	0.3012		0.0064			0	0	0	0
acetate-	0	0	0	0	0.51109	0	0	0	0	0	0		0			0	0	0	0
oxalate--	0	0	0	0	0	0	0	0	0	0	0		2E-09			0	0	0	0
DBP	0.06075	0.02334	0.0185	0	0	0.0019	0.0083	0	0	0	3E-05		0.0178			0	0	0	0
butanol	0.06075	0.02334	0.0185	0	0	0.0019	0.0083	0	0	0	3E-05		0.0178			0	0	0	0
	0	0	0	0	0	0	0	0	0	0	0		0			0	0	0	0
NH3	0	0	0	0	0.00027	2E-07	0.0629	0.0147	0.0028	0.0002	0.001		0.0255			0	0	0	0
Fe(CN)6----	0	0	0	0	0	0	0	0	0	0	0		0			0	0	0	0
Pu-239 (µCi/g)	0	0	0	30.018	0	0	0	30.025	29.986	30.005	29.996		30.352	0	0	0	0	0	0
U-238 (M)	0	0	0	0	0	0.0021	0.004	0.0029	0.004	0.004	0.004		0.0042			0	0	0	0
Cs-137 (Ci/L)	0	0	0	0	0	0.0001	0.6322	0.2763	0.3202	0	0.0489		0.0488	0	0	0	0	0	0
Sr-90 (Ci/L)	0	0	0	0	0.034	0.0001	0.034	0.034	0.034	0.034	0.0915		0.0699	0	0	0	0	0	0

pred. su mol/L	B in	B-SltCk	T1 in	T1-SltCk	R in	RSltCk	T2 in	T2-SltCk	BY in	BY-SltCk	S1 in	S1-SltCk	S2 in	S2-SltSlr	A1 in	A1-SltCk	A2 in	A2-SltSlr	F3	PL2	CWZr2	BP/Cplx	BP/NCplx	PASF
Na		4.9982		4.9802		6.6539		8.7509		8.8297		10.777		12.705		11.541		0	2.7573	0.6419	0.4916	0	0	0.06
Al(OH)4 -		0.2971		0.2331		1.5625		1.34		1.6011		1.6559		1.7465		1.6203		0	0.3188	0	0			0
Fe		0.002		0.002		0.002		0.0005		0.002		0.0005		0.0009		0.001		0	0.002	0.002	0.002			0.002
Cr		0.0079		0.0072		0.03		0.0311		0.03		0.0312		0.033		0.032		0	0	0.008	0			0
Bi		0.004		0.004		9E-06		0.0022		0.0012		0.0019		0.0044		0.0041		0	0	0	0			0
La		0		0		3E-11		1E-09		4E-06		2E-05		5E-05		2E-05		0	0	0	0			0
Hg		1E-05		1E-05		1E-06		1E-05		1E-05		1E-05		1E-05		1E-05		0	0	0	1E-05			0
Zr		0.003		0.003		4E-06		0.0014		0.0004		0.0011		0.0034		0.0031		0	0	0	0.003			0
Pb		0		0		0.0002		0.0011		0.0016		0.0014		0.0038		0.0019		0	0	4E-05	0			0
Ni		0.0018		0.0018		0.0018		0.0013		0.0018		0.0012		0.0014		0.0016		0	0	0.0018	0			0
Sr		0		0		1E-11		5E-10		1E-06		8E-06		2E-05		6E-06		0	0	0	0			0
Mn		0		0		6E-05		0.001		0.0042		0.0011		0.0014		0.0021		0	0	0.006	0			0
Ca		0.009		0.009		0.009		0.0067		0.009		0.0061		0.0076		0.0082		0	0.009	0.009	0.009			0.009
K		0.0209		0.0196		0.0291		0.0492		0.0484		0.0699		0.1808		0.1797		0	0.0111	0.0069	0.2245			0.0002
balance		9E-16		-4E-15		2E-05		0.0007		0.001		0.0012		0.003		0.0013		0	-4E-16	1E-16	-1E-16			0
density		1.2104		1.2044		1.3622		1.4203		1.4414		1.5186		1.5896		1.5409		1	1.1056	1.0241	1.0171			1.002
vol%solids		17.683		11.446		13.82		55.385		48.966		55.173		99		45.523		90	3.9	2	10.5			0.6
void frac.		0.7496		0.731		0.8732		0.7922		0.779		0.7221		0.5624		0.6159		0.5	0.789	0.8882	0.8503			0.7842
wt.% H2O		68.357		68.569		60.8		54.129		53.953		47.268		40.222		44.166		100	87.097	95.386	94.866			99.388
TOC wt.%C		0.0003		0.0003		0.0083		0.7586		0.6505		1.0953		2.8233		1.7719		0	0	0.048	0			0
species		excludes hydroxide bound to Al													excludes hydroxide bound to Al							excludes hydroxide bour		
OH-		0.0243		0.0765		0.004		0.4036		0.4152		0.4561		1.0305		0.7409		0	1.4358	0.0164	0.1077			0.016
NO3-		2.8005		2.8004		2.7988		2.7545		2.8017		2.7619		2.9383		2.7766		0	0.1735	0.2507	0.3929			0.0663
NO2-		0.3988		0.3963		2.1225		1.9977		2.2363		3.3538		3.4604		3.4329		0	0.4492	0.0167	0.0079			0
CO3--		0.1807		0.1932		0.0152		0.3968		0.3705		0.4204		0.4678		0.4391		0	0.009	0.1112	0.009			0.0005
PO4---		0.15		0.15		0.0006		0.1504		0.088		0.151		0.159		0.1527		0	0	0.0697	0			0
SO4--		0.1947		0.1894		0.0506		0.2917		0.2455		0.3537		0.3975		0.3933		0	0.1359	0.0041	0			0
SiO3--		0.034		0.0321		0.034		0.0278		0.034		0.0263		0.0309		0.0321		0	0.034	0	0			0
F-		0.2112		0.1999		0.0005		0.1193		0.0765		0.1012		0.2564		0.2444		0	0.0302	0	0.24			0
Cl-		0.1177		0.1116		0.1335		0.1708		0.1632		0.1736		0.1823		0.1746		0	0.051	0.0039	0.0047			0.0009
C6H5O7---		0		0		0.0005		0.0221		0.0308		0.0388		0.0954		0.0447		0	0	0	0			0
EDTA----		0		0		2E-05		0.0134		0.0069		0.02		0.058		0.0426		0	0	0	0			0
HEDTA---		0		0		1E-05		0.026		0.0009		0.0379		0.1086		0.0755		0	0	0	0			0
		0		0		0		0		0		0		0		0		0	0	0	0			0
glycolate-		0		0		0.0007		0.0794		0.0217		0.1192		0.3115		0.16		0	0	0	0			0
acetate-		0		0		7E-05		0.0025		0.0411		0.007		0.0234		0.0313		0	0	0	0			0
oxalate--		0		0		3E-11		1E-09		4E-06		2E-05		4E-05		2E-05		0	0	0	0			0
DBP		3E-05		3E-05		0.0004		0.0173		0.0327		0.0268		0.0693		0.0369		0	0	0.0034	0			0
butanol		3E-05		3E-05		0.0004		0.0173		0.0327		0.0268		0.0693		0.0369		0	0	0.0034	0			0
		0		0		0		0		0		0		0		0		0	0	0	0			0
NH3		0.0012		0.0012		0.0355		0.015		0.0132		0.0248		0.0451		0.1885		0	0.0172	1E-05	0.7823			0.0501
Fe(CN)6----		0		0		0		0		0		0		0		0		0	0	0	0			0
Pu-239 (µCi/g)		15.262		18.149		30.009		24.411		30.02		22.966		25.399		28.425		0	30	4.6515	30			0
U-238 (M)		0.004		0.004		0.004		0.0034		0.004		0.0033		0.0033		0.004		0	0.004	0.0005	0.0032			0
Cs-137 (Ci/L)		0.0162		0.0171		0.2967		0.2799		0.1746		0.3664		0.9596		0.4826		0	2.6444	0.0301	0.0022			0
Sr-90 (Ci/L)		0.023		0.0234		0.034		0.0318		0.034		0.0314		0.0326		0.0298		0	0.034	0.0261	0.0019			0

prec. solids mol/L	MW1	MW2	1C1	1C2	2C1	2C2	224	UR/TBP	PFeCN1	PFeCN2	TFeCN	1CFeCN	R1	R2	CWR1	CWR2	P1	P2	P2'	PL1	CWP1	CWP2	CWZr1
NaNO3																							
NaNO2																							
NaCl	0	0	0	0	0	0	0	0	0	0	0	0	0	0	0	0	0	0		0	0	0	0
NaF	0	0	0	0.002	0	0	1.8347	0	0	0	0	0	0	0	0	0	0	0		0	0	0	5.08069
Sr(OH)2							1.5644																
Na2CO3.7H2O	1.6642	2.479	-0	-0	-0	-0	-0	-0	-0	-0	-0	-0	-0	-0	-0	-0	-0	-0	0	-0	-0	-0	-0
Na3PO4.10H2O	0	0	0	0	0	0	-0	0	-0	-0	0	-0	0	0	0	0	0	0		0	0	0	0
Na3PO4.12H2O	0.34605	0.3658	1.153	0.721	0.8102	0	0		0	0	0	0.09182	0	0	0	0	0	0		0	0	0	0
Na2SO4	0	0	0	0	0	0	0	0	0	0	0	0	0	0	0	0	0	0		0	0	0	0
Na2SO4.10H2O	0	0	0	0	0	0	0	0	0	0	0	0	0	0	0	0	0	0		0	0	0	0
Na2SiO3	0	0	0.04	0.023	0.0518	0	0	0	0.02942	0.03403	0	0.085878	0	0.458	0	0	0.5935	1.4966		0	0	0	0
(Al2O3.3H2O)/2	0	0	0.34	0.842	0	0	0	0	0	0	0.14139	0.271833	3.756	4.1632	4.9383	5.3793	0	0		0	4.4444	5.3793	0
NaAlO2	0	0	0	0	0	0	0	0	0	0	0	0	0	0	5.4969	0	0	0		0	0	0	0
FeO(OH)	0.11795	0.1182	0.322	0.177	0.5593	0.78322	0.3593	1.57156	0.75686	0.87512	0	0.000152	1.011	2.6851	0.1637	0.4556	2.6277	2.9592		2.909331	0.1633	0.4556	0.12599
Cr(OH)3	0	0	0	0	0	0	0	0	0	0	0	0	0.85	4.3816	0	0	0	0		0	0	0	0
MnO2	0	0	0	0	0	0	0	0	0	0	0	0	0	0	0	0	0	0		0	0	0	0
BiPO4	0	0	0.074	0.041	0.0891	0.03731	0.0571	0	0.24352	0.28158	0	0.208633	0	0	0	0	0	0		0	0	0	0
Pb(OH)2	0	0	0	0	0	0	0	0	0	0	0	0	0	0	0.1166	0.3245	0	0		0	0.1163	0.3245	0
(La2O3)/2	0	0	0	0	0	0	0.2318	0	0	0	0	0	0	0	0	0	0	0	0	0	0	0	0
HgO	0	0	1E-04	5E-05	0	0	0	0	0	0	0	0	0	0	0.0041	0.011	0	0	0	0	0.0025	0.0059	0.00199
Na3cit.5H2O																							
Na Acetate																							
Na 2 Oxalate	0	0	0	0	0	0	0.6385						0	0	0	0	0	0		0	0	0	0
Na3HEDTA																							
Na4EDTA																							
CaCO3.6H2O	0.0809	0.0821	0.069	0.038	0.1367	0.26783	0.2362	0.3368	0.2554	0.29528	0.78628	0.22984	0.207	0.5018	0.1149	0.315	0.4137	0.2358		0.426148	0.1129	0.3142	0.08723
Ni(OH)2	0	0	0	0	0	0	0	0	0	0.05007	0.29291	0.085484	0.049	0.1166	0	0	0.1002	0.0567		0.100216	0	0	0
ZrO2•2H2O	0	0	0.008	0.005	0	0	0	0	0	0	0	0.021058	0	0	0	0	0	0		0	0	0	0.92422
Na2NiFe(CN)6.6H2O									0.13514	0.07813	0.35714	0.104167											
UO2(OH)2*6H2O	1.98647	1.9765	0	0	0	0	0	0.13608	0.10298	0.11908	0.27165	0	0.018	0.2659	0.1809	0.4826	0.028	0.1721		0	0.0953	0.2038	0

prec. solids mol/L	OWW1	OWW2	OWW3	Z	HS	TH1	TH2	AR	B	BL	SRR	CSR in	CSR	DE	CEM	NIT	Salt Slurry	DW	N
NaNO3						0	0	0			0	0	0				0.4576	0	0
NaNO2						0	0	0			0	0	0				1.5975	0	0
NaCl	0	0	0	0	0	0	0	0	0	0	0	0	0			0	0.478	0	0
NaF	0	0	0	0	0	0	0	0	0	0	0	0	0			0	0	0	0
Sr(OH)2																			
Na2CO3.7H2O	-0	-0.0837	-0	-0	0	-0	-0	0	-0	0	0	-0	-0			0	0.83	-0	-0
Na3PO4.10H2O	0	0	0	0	0	0	0	0	0	0	0	0	0			0	0	0	0
Na3PO4.12H2O	0	0	0	0	0	0	0	0	0	0	0	0	0					0	0
Na2SO4	0	0	0	0	0	0	0	0	0	0	0	0	0			0	0	0.4	0.4
Na2SO4.10H2O	0	0	0	0	0	0	0	0	0	0	0	1.1338	0			0	0	0.028	0.028
Na2SiO3	0	0	0	0	0	0	0	2.2387	1.2	2.3666	1.7738	3.3269	3.1636			0	0	0	0
(Al2O3.3H2O)/2	0	0	0	10.87	0	0.4103	0.4103	0.0529	1.162	5.7647	0	1.459	0			0	0.1925	0	0
NaAlO2	0	0	0	0	0	0	0	0	0	0	0	0	0			0	0.615	0	0
FeO(OH)	6.33408	3.45498	6.3341	1.6835	5.66703	1.0863	1.0863	1.3001	1.0003	2.2067	1.5003	0	0.3454			0	0	4	4
Cr(OH)3	0	0	0	0	0	0	0	0	0	0	0	1.4089	0			0	0	0.8	0.8
MnO2	0	0.27469	0	0	0	0	0	0	0	0	0	0.1916	0			0	0	0	0
BiPO4	0	0	0	0	0	0	0	0	0	0	0	0.006	0			0	0	0	0
Pb(OH)2	0	0	0	0	0.15029	0	0	0	0	0	0	0.0084	0			0	0	0	0
(La2O3)/2	0	0	0	0	0	0	0	0	0	0	0	7E-08	0			0	0	0	0
HgO	0	0	0	0	0	0	0	0	0	0	0	6E-05	0			0	0	0	0
Na3cit.5H2O																			
Na Acetate																			
Na 2 Oxalate	0	0	0	0	0	0	0	0	0	0	0	0	0			0	0	0	0
Na3HEDTA																			
Na4EDTA																			
CaCO3.6H2O	1.50736	0.82341	1.5219	0.4141	0	0.1614	0.1614	0.1021	0.2144	0.1982	0.1291	1.0996	1.5188			0	0	0.9037	0.9037
Ni(OH)2	0.36734	0.20039	0.3673	0.0964	0.18366	0.038	0.038	0.1375	0.0404	1.2066	0	0.2428	0.3075			0	0	0.4	0.4
ZrO2•2H2O	0	0	0	0	0	0	0	0	0	0	0	0.0035	0			0	0	0	0
Na2NiFe(CN)6.6H																			
UO2(OH)2*6H2O	0	0	0	0	0	0	0.0939	0	0.457	0.5581	0.9999	0.3183	0.4095			0	0	0	0

prec. solids mol/L	B in	B-SltCk	T1 in	T1-SltCk	R in	RSltCk	T2 in	T2-SltCk	BY in	BY-SltCk	S1 in	S1-SltCk	S2 in	S2-SltSlr	A1 in	A1-SltCk	A2 in	A2-SltSlr	P3	PL2	CWZr2	BP/Cplx	BP/NCplx	PASF
NaNO3		1.6704		1.0407		2.847		4.7642		4.2307		5.4778		3.2546		4.4392		0						
NaNO2		0		0		0		0		0		0.1647		2.8396		0.7465		0						
NaCl		0		0															0	0	0			0
NaF		0		0															0	0	5.0837			0
Sr(OH)2																								
Na2CO3.7H2O		0		0		-0		0.0935		0.1465		0.1701		0.4056		0.3125		0	-0	-0	-0			-0
Na3PO4.10H2O		1.2464		1.5365		0		0.0135		0		0		0.2415		0.3293		0	0	0	0			0
Na3PO4.12H2O																			0	0	0			0
Na2SO4		0		0		0		0		0		0		0		0		0	0	0	0			0
Na2SO4.10H2O		0		0		0		0		0		0		0.3504		0.1822		0	0	0	0			0
Na2SiO3		0.0061		0		0.099		0.084		0.0518		0.1062		0.0563		0.1555		0	1.4977	0	0			0
(Al2O3.3H2O)/2		0		0		0		0		0		0		0		0		0	0.6103	0	0			0
NaAlO2		0		0		0		0		0.8985		0.8519		1.5323		1.4528		0	0	0	0			0
FeO(OH)		0.2035		0.2207		0.0153		0.0136		0.0145		0.0122		0.0025		0.0121		0	2.9592	1.9002	0.3622			1.3336
Cr(OH)3		0		0		0.2014		0.0348		0.0273		0.0823		0.0359		0.0464		0	0	0	0			0
MnO2		0		0		0		0.004		0		0.0052		0.0016		0.0043		0	0	0	0			0
BiPO4		0.043		0.0426		0		0		0		0		0.0032		0.0049		0	0	0	0			0
Pb(OH)2		0		0		0		0		0.0044		0		0		0		0	0	0	0			0
(La2O3)/2	0	0	0	0	0	0	0	1E-09	0	0	0	0	0	0	0	0		0	0	0	0			0
HgO	0	4E-05	0	3E-05	0	0	0	7E-07	0	3E-05	0	2E-06	0	2E-05	0	4E-05		0	0	0	0.0021			0
Na3cit.5H2O																								
Na Acetate																								
Na 2 Oxalate		0		0		0		0		0		0		0		0		0	0	0	0			0
Na3HEDTA																								
Na4EDTA																								
CaCO3.6H2O		0.0839		0.1068		0.0689		0.0546		0.0664		0.0522		0.015		0.0521		0	0.2393	0.4518	0.0872			1.5019
Ni(OH)2		0.0067		0.0101		0.0135		0.0103		0.0121		0.0099		0.0028		0.0094		0	0	0.1102	0			0
ZrO2•2H2O		0.0017		0.0012		0		0		0		0		0.002		0.0052		0	0	0	0.9243			0
Na2NiFe(CN)6.6H																								
UO2(OH)2*6H2O		0.003		0.0047		0.0304		0.0162		0.0227		0.0183		0.005		0.0133		0	0.8816	0	0			0

cc/L solids	MW1	MW2	1C1	1C2	2C1	2C2	224	UR/TBP	PFeCN1	PFeCN2	TFeCN	1CFeCN	R1	R2	CWR1	CWR2	P1	P2	P2'	PL1	CWP1	CWP2	CWZr1
NaNO3	0	0	0	0	0	0	0	0	0	0	0	0	0	0	0	0	0	0		0	0	0	0
NaNO2	0	0	0	0	0	0	0	0	0	0	0	0	0	0	0	0	0	0		0	0	0	0
NaCl	0	0	0	0	0	0	0	0	0	0	0	0	0	0	0	0	0	0		0	0	0	0
NaF	0	0	0	0.034	0	0	30.117	0	0	0	0	0	0	0	0	0	0	0		0	0	0	83.4004
Sr(OH)2	0	0	0	0	0	0	52.492	0	0	0	0	0	0	0	0	0	0	0		0	0	0	0
Na2CO3.7H2O	255.802	381.04	-0	-0	-0	-0	-0	-0	-0	-0	-0	-0	-0	-0	-0	-0	-0	-0		-0	-0	-0	-0
Na2CO3.10H2O	0	0	0	0	0	0	0	0	0	0	0	0	0	0	0	0	0	0		0	0	0	0
Na3PO4.10H2O	0	0	0	0	0	0	-0	0	-0	-0	0	-0	0	0	0	0	0	0		0	0	0	0
Na3PO4.12H2O	81.1984	85.821	270.6	169.1	190.11	0	0	0	0	0	0	21.54484	0	0	0	0	0	0		0	0	0	0
Na2SO4	0	0	0	0	0	0	0	0	0	0	0	0	0	0	0	0	0	0		0	0	0	0
Na2SO4.10H2O	0	0	0	0	0	0	0	0	0	0	0	0	0	0	0	0	0	0		0	0	0	0
Na2SiO3	0	0	2.013	1.179	2.6321	0	0	0	1.4961	1.73087	0	4.367619	0	23.295	0	0	30.184	76.116		0	0	0	0
Al2O3.3H2O	0	0	10.96	27.15	0	0	0	0	0	0	4.55749	8.762132	121.1	134.19	159.18	173.39	0	0		0	143.26	173.39	0
NaAlO2	0	0	0	0	0	0	0	0	0	0	0	0	0	0	166.88	0	0	0		0	0	0	0
FeO(OH)	3.47007	3.4778	9.467	5.211	16.454	23.0427	10.571	46.2361	22.2671	25.7464	0	0.004486	29.76	78.997	4.8152	13.404	77.308	87.061		85.59405	4.8036	13.404	3.70669
Cr(OH)3	0	0	0	0	0	0	0	0	0	0	0	0	24.8	127.82	0	0	0	0		0	0	0	0
MnO2	0	0	0	0	0	0	0	0	0	0	0	0	0	0	0	0	0	0		0	0	0	0
BiPO4	0	0	3.567	1.971	4.2847	1.79348	2.7436	0	11.7063	13.5356	0	10.02909	0	0	0	0	0	0		0	0	0	0
Pb(OH)2	0	0	0	0	0	0	0	0	0	0	0	0	0	0	4.6879	13.046	0	0		0	4.6759	13.046	0
La2O3	0	0	0	0	0	0	5.8	0	0	0	0	0	0	0	0	0	0	0	0	0	0	0	0
HgO	0	0	0.002	1E-03	0	0	0	0	0	0	0	0	0	0	0.0795	0.2149	0	0	0	0	0.0491	0.1152	0.03887
Na3cit.5H2O	0	0	0	0	0	0	0	0	0	0	0	0	0	0	0	0	0	0		0	0	0	0
NaAcetate	0	0	0	0	0	0	0	0	0	0	0	0	0	0	0	0	0	0		0	0	0	0
Na2Oxalate	0	0	0	0	0	0	36.561	0	0	0	0	0	0	0	0	0	0	0		0	0	0	0
Na3HEDTA	0	0	0	0	0	0	0	0	0	0	0	0	0	0	0	0	0	0		0	0	0	0
Na4EDTA	0	0	0	0	0	0	0	0	0	0	0	0	0	0	0	0	0	0		0	0	0	0
CaCO3.6H2O	9.51026	9.6492	8.137	4.508	16.072	31.4837	27.769	39.591	30.0224	34.7103	92.4263	27.01759	24.37	58.986	13.511	37.027	48.631	27.722		50.09345	13.273	36.929	10.2542
Ni(OH)2	0	0	0	0	0	0	0	0	0	1.27197	7.44066	2.171529	1.251	2.9615	0	0	2.5463	1.4411		2.545759	0	0	0
ZrO(OH)2	0	0	0.403	0.228	0	0	0	0	0	0	0	1.031836	0	0	0	0	0	0		0	0	0	45.2869
Na2NiFe(CN)6.6H2O			0	0	0	0	0	0	31.8739	18.4271	84.2381	24.56944	0	0	0	0	0	0		0	0	0	0
UO2(OH)2*6H2O	292.295	290.83	0	0	0	0	0	20.0238	15.1533	17.5214	39.972	0	2.703	39.131	26.611	71.018	4.127	25.32	0	0	14.021	29.989	0

cc/L solids	OWW1	OWW2	OWW3	Z	HS	TH1	TH2	AR	B	BL	SRR	CSR in	CSR	DE	CEM	NIT	Salt Slurry	DW	N
NaNO3	0	0	0	0	0	0	0	0	0	0	0	0	0			0	17.203	0	0
NaNO2	0	0	0	0	0	0	0	0	0	0	0	0	0			0	50.843	0	0
NaCl	0	0	0	0	0	0	0	0	0	0	0	0	0			0	12.903	0	0
NaF	0	0	0	0	0	0	0	0	0	0	0	0	0			0	0	0	0
Sr(OH)2	0	0	0	0	0	0	0	0	0	0	0	0	0			0	0	0	0
Na2CO3.7H2O	-0	-12.871	-0	-0	0	-0	-0	0	-0	0	0	-0	-0			0	127.58	-0	-0
Na2CO3.10H2O	0	0	0	0	0	0	0	0	0	0	0	0	0			0	0	0	0
Na3PO4.10H2O	0	0	0	0	0	0	0	0	0	0	0	0	0			0	0	0	0
Na3PO4.12H2O	0	0	0	0	0	0	0	0	0	0	0	0	0			0	0	0	0
Na2SO4	0	0	0	0	0	0	0	0	0	0	0	0	0			0	0	21.2	21.2
Na2SO4.10H2O	0	0	0	0	0	0	0	0	0	0	0	249.53	0			0	0	6.1621	6.1621
Na2SiO3	0	0	0	0	0	0	0	113.86	61.03	120.36	90.213	169.2	160.9			0	0	0	0
Al2O3.3H2O	0	0	0	350.36	0	13.227	13.227	1.7063	37.455	185.82	0	47.03	0			0	6.2049	0	0
NaAlO2	0	0	0	0	0	0	0	0	0	0	0	0	0			0	18.671	0	0
FeO(OH)	186.352	101.647	186.35	49.528	166.727	31.96	31.96	38.25	29.428	64.922	44.14	0	10.162			0	0	117.68	117.68
Cr(OH)3	0	0	0	0	0	0	0	0	0	0	0	41.101	0			0	0	23.338	23.338
MnO2	0	7.02069	0	0	0	0	0	0	0	0	0	4.8959	0			0	0	0	0
BiPO4	0	0	0	0	0	0	0	0	0	0	0	0.2901	0			0	0	0	0
Pb(OH)2	0	0	0	0	6.04172	0	0	0	0	0	0	0.3357	0			0	0	0	0
La2O3	0	0	0	0	0	0	0	0	0	0	0	2E-06	0			0	0	0	0
HgO	0	0	0	0	0	0	0	0	0	0	0	0.0012	0			0	0	0	0
Na3cit.5H2O	0	0	0	0	0	0	0	0	0	0	0	0	0			0	0	0	0
NaAcetate	0	0	0	0	0	0	0	0	0	0	0	0	0			0	0	0	0
Na2Oxalate	0	0	0	0	0	0	0	0	0	0	0	0	0			0	0	0	0
Na3HEDTA	0	0	0	0	0	0	0	0	0	0	0	0	0			0	0	0	0
Na4EDTA	0	0	0	0	0	0	0	0	0	0	0	0	0			0	0	0	0
CaCO3.6H2O	177.189	96.7919	178.9	48.673	0	18.969	18.969	12.004	25.205	23.302	15.176	129.26	178.53			0	0	106.23	106.23
Ni(OH)2	9.33142	5.09051	9.3314	2.4493	4.6655	0.9662	0.9662	3.4924	1.0273	30.651	0	6.1674	7.8123			0	0	10.161	10.161
ZrO(OH)2	0	0	0	0	0	0	0	0	0	0	0	0.1704	0			0	0	0	0
Na2NiFe(CN)6.6H	0	0	0	0	0	0	0	0	0	0	0	0	0			0	0	0	0
UO2(OH)2*6H2O	0	0	0	0	0	0	13.819	0	67.245	82.118	147.13	46.838	60.261			0	0	0	0

cc/L solids	B in	B-SltCk	T1 in	T1-SltCk	R in	RSltCk	T2 in	T2-SltCk	BY in	BY-SltCk	S1 in	S1-SltCk	S2 in	S2-SltSlr	A1 in	A1-SltCk	A2 in	A2-SltSlr	P3	PL2	CWZr2	BP/Cplx	BP/NCplx	PASF
NaNO3		62.796		39.123		107.03		179.1		159.05		205.93		122.35		166.89		0	0	0	0			0
NaNO2		0		0		0		0		0		5.241		90.373		23.757		0	0	0	0			0
NaCl		0		0		0		0		0		0		0		0		0	0	0	0	0	0	0
NaF		0		0		0		0		0		0		0		0		0	0	0	83.45	0	0	0
Sr(OH)2		0		0		0		0		0		0		0		0		0	0	0	0			0
Na2CO3.7H2O		0		0		-0		14.375		22.521		26.15		62.343		48.033		0	-0	-0	-0			-0
Na2CO3.10H2O		0		0		0		0		0		0		0		0		0	0	0	0			0
Na3PO4.10H2O		169.12		208.48		0		1.8291		0		0		32.768		44.678		0	0	0	0			0
Na3PO4.12H2O		0		0		0		0		0		0		0		0		0	0	0	0			0
Na2SO4		0		0		0		0		0		0		0		0		0	0	0	0			0
Na2SO4.10H2O		0		0		0		0		0		0		77.118		40.089		0	0	0	0			0
Na2SiO3		0.3091		0		5.0352		4.2746		2.6339		5.4026		2.865		7.9088		0	76.172	0	0			0
Al2O3.3H2O		0		0		0		0		0		0		0		0		0	19.671	0	0			0
NaAlO2		0		0		0		0		27.279		25.864		46.52		44.107		0	0	0	0			0
FeO(OH)		5.9866		6.4925		0.4502		0.3988		0.4266		0.3592		0.0726		0.3556		0	87.062	55.904	10.656			39.235
Cr(OH)3		0		0		5.8747		1.0148		0.7961		2.4001		1.047		1.3526		0	0	0	0			0
MnO2		0		0		0		0.101		0		0.1321		0.0401		0.1105		0	0	0	0			0
BiPO4		2.0692		2.0466		0		0		0		0		0.1549		0.235		0	0	0	0			0
Pb(OH)2		0		0		0		0		0.1778		0		0		0		0	0	0	0			0
La2O3	0	0	0	0	0	0	0	3E-08	0	0	0	0	0	0	0	0	0	0	0	0	0	0	0	0
HgO	0	0.0008	0	0.0006	0	0	0	1E-05	0	0.0006	0	4E-05	0	0.0003	0	0.0007	0	0	0	0	0.0408	0	0	0
Na3cit.5H2O		0		0		0		0		0		0		0		0		0	0	0	0			0
NaAcetate		0		0		0		0		0		0		0		0		0	0	0	0			0
Na2Oxalate		0		0		0		0		0		0		0		0		0	0	0	0			0
Na3HEDTA		0		0		0		0		0		0		0		0		0	0	0	0			0
Na4EDTA		0		0		0		0		0		0		0		0		0	0	0	0			0
CaCO3.6H2O		9.857		12.556		8.1029		6.4223		7.8011		6.1305		1.7643		6.1255		0	28.13	53.104	10.255			176.54
Ni(OH)2		0.171		0.2566		0.3439		0.2612		0.3072		0.2523		0.0701		0.2376		0	0	2.8003	0			0
ZrO(OH)2		0.0818		0.0564		0		0		0		0		0.0967		0.2541		0	0	0	45.289			0
Na2NiFe(CN)6.6H		0		0		0		0		0		0		0		0		0	0	0	0			0
UO2(OH)2*6H2O		0.4466		0.688		4.4682		2.3857		3.3347		2.6934		0.739		1.9574		0	129.73	0	0			0

frac. prec. solids	MW1	MW2	1C1	1C2	2C1	2C2	224	UR/TBP	PFeCN1	PFeCN2	TFeCN	1CFeCN	R1	R2	CWR1	CWR2	P1	P2	P2'	PL1	CWP1	CWP2	CWZr1
NaNO3	0	0	0	0	0	0	0	0.17895	0.17917	0.17919	0	0	0	0.335	0	0	0	0	0	0.027839	0	0	0
NaNO2	0	0	0	0	0	0	0	0	0	0	0	0	0	0	0	0	0	0	0	0	0	0	0
NaCl	0	0	0	0	0	0	0	0	0	0	0	0	0	0	0	0	0	0		0	0	0	0
NaF	0	0	0	0.002	0	0	0.2308		0	0		0											0.69282
Sr(OH)2							0.9685																
Na2CO3	0.38472	0.4814	0	0	0	0	0	0	0	0	0	0	0	0	0	0	0	0		0	0	0	0
Na3PO4	0.2307	0.2438	0.527	0.561	0.2755	0	0	0	0	0	0	0.02937	0	0	0	0	0.9	0.9		0	0.9	0.9	0.9
Na2SO4	0	0	0	0	0	0	0	0	0	0	0	0	0	0	0	0	0	0	0	0	0	0	0
Na2SiO3	0	0	0.143	0.152	0.0951	0	1	1	0.0311	0.03112	1	0.108478	0	0.2051	0	1	0.2782	0.6335	0.63	1	0	1	1
Al2O3.3H2O	0.6	0.6	0.2	0.9	0.3	0.6	0.8	0.07	0.07	0.07	0.07	0.07	0.26	0.07	0.2	0.2	0.07	0.07		0.3	0.3	0.2	0
NaAlO2	0	0	0	0	0	0	0	0	0	0	0	0	0	0	0.2226	0	0	0		0	0	0	0
FeO(OH)	0.88461	0.8866	0.958	0.959	0.9508	0.93027	0.8758	0.9566	0.93346	0.93346	1	0.003659	0.958	0.9626	0.8722	0.8692	0.9667	0.9831	0.95	0.969777	0.8701	0.8692	0.87032
Cr(OH)3	0	0	0	0	0	0	0	0	0	0	1	0	0.563	0.7367	0	0	0	0		0	0	0	0
MnO2	1	1	1	1	1	1	0	1	1	1	1	1	1	1	1	1	1	1		1	1	1	1
BiPO4	1	1	0.726	0.729	0.6061	0.24113	0.359	1	0.69311	0.69311	1	0.715312	1	1	1	1	1	1		1	1	1	1
Pb(OH)2	1	1	1	1	1	1	1	1	1	1	1	1	1	1	0.8587	0.8555	1	1		0	0.8565	0.8555	1
La2O3	0.60255	0.6025	0.603	0.603	0.6025	0.60255	0.6026	0.60255	0.60255	0.60255	0.60255	0.602547	0.603	0.6025	0.6025	0.6025	0.6025	0.6025	0.6	0.602547	0.6025	0.6025	0.60255
HgO	1	1	0.585	0.568	1	1	1	1	1	1	1	1	1	1	0.9714	0.9698	1	1	1	1	0.9539	0.9452	0.95503
Na3cit.5H2O	0	0	0	0	0	0	0	0	0	0	0	0	0	0	0	0	0	0		0	0	0	0
Na Acetate	0	0	0	0	0	0	0	0	0	0	0	0	0	0	0	0	0	0		0	0	0	0
Na 2 Oxalate	0	0	0	0	0	0	0.83	0	0	0	0	0	0	0	0	0	0	0		0	0	0	0
Na3HEDTA	0	0	0	0	0	0	0	0	0	0	0	0	0	0	0	0	0	0		0	0	0	0
Na4EDTA	0	0	0	0	0	0	0	0	0	0	0	0	0	0	0	0	0	0		0	0	0	0
CaCO3.6H2O	0.53886	0.5467	0.524	0.528	0.5121	0.50343	0.5075	0.51213	0.51265	0.51264	0.55039	0.551617	0.511	0.5163	0.5157	0.5052	0.5035	0.5072	0.5	0.510825	0.5072	0.5045	0.50802
Ni(OH)2	0	0	0	0	0	0	0	0	0.64092	0.64092	0.82014	0.820647	0.554	0.5538	0	0	0.5513	0.5531		0.551188	0	0	0
ZrO(OH)2	1	1	0.281	0.289	1	1	1	1	1	1	1	0.252694	1	1	1	1	1	1		1	1	1	0.97043
Na2NiFe(CN)6.6H2O			1	1	1	1	1	1	1	1	1	1	1	1	1	1	1	1		1	1	1	1
Pu	0	0.5	0	0	0	0	0	0	0	0	0.5	0	0	0	0.8752	0.8313	0.1904	0.6524		0.805709	0.6835	0.6382	0.69742
UO2(OH)2*6H2O	0.98475	0.9849	0	0	0	0	0	0.48851	0.48851	0.48852	0.48758	0	0.173	0.5602	0.7904	0.7789	0.134	0.6282	0.89	0	0.6615	0.5978	0
Cs	0	0	0	0	0	0	0	0.01	1	1	1	1	0	0.005	0	0	0	0		0.027839	0	0	0
Sr	0	0	0	0	0	0	0	0	0	0	0	0	0.576	0.8147	0	0	0.839	0.9404	0	0	0	0	0

frac. prec. solids	OWW1	OWW2	OWW3	Z	HS	TH1	TH2	AR	B	BL	SRR	CSR in	CSR	DE	CEM	NIT	Salt Slurry	DW	N
NaNO3	0	0	0	0.2456	0	0	0	0	0	0	0	0	0			0	0.13	0	0
NaNO2	0	0	0	0	0	0	0	0	0	0	0	0	0				0.3156	0	0
NaCl	0	0	0	0	0	0	0	0	0	0	0		0				0.7648	0	0
NaF	0	0	0			0	0	0					0				0	0	0
Sr(OH)2	0	0	0																
Na2CO3	0	0.00218	0	0	0	0	0	0	0	0	0	0	0				0.664	0	0
	0	0	0																
	0	0	0																
Na3PO4	0	0	0	0	0	0	0	0	0.9	0	0	0	0				0	1	0.5843
	0	0	0																
Na2SO4	0	0	0	0	0	0	0	0	0	0	0	0.1773	0				0	0	0
Na2SiO3	0	0	0	1	1	1	1	0.6722	0.15	0.3219	0.5765	1	0.4755				1	1	1
Al2O3.3H2O	0	0	0	0.5	0.1	0.07	0.07	0.07	0.07	0.07	0.07	0.07	0				0.07	0.07	0.07
NaAlO2	0	0	0	0	0	0	0	0	0	0	0	0	0				0.2236	0.23	0.23
FeO(OH)	0.95011	0.95012	0.9501	0.9513	0.97149	0.9693	0.9693	0.9529	0.7145	0.8827	0.9514	0	0.6362				1	0.9501	0.9501
Cr(OH)3	0	0	0	0	0	0	0	0	0	0	1	1	0				1	0	0
MnO2	0	0.2518	0	1	1	1	1	0	1	1	1	1	0			0	1	1	1
BiPO4	0	0	0	1	1	1	1	0	1	1	1	1	0				1	1	1
Pb(OH)2	0	0	0	1	0.53044	1	1	0	0	1	1	1	0				1	1	1
La2O3	0	0	0	0.6025	0.60255	0.6025	0.6025	0.6025	0.6025	0.6025	0.6025	0.6025	0				0.6025	0.6025	0.6025
HgO	0	0	0	1	1	1	1	0	1	1	1	1	0				1	1	1
Na3cit.5H2O	0	0	0	0	0	0	0	0	0	0	0	0	0				0	0	0
Na Acetate	0	0	0	0	0	0	0	0	0	0	0	0	0				0	0	0
Na 2 Oxalate	0	0	0	0	0	0	0	0	0	0	0	0	0				0	0	0
Na3HEDTA	0	0	0	0	0	0	0	0	0	0	0	0	0				0	0	0
Na4EDTA	0	0	0	0	0	0	0	0	0	0	0	0	0				0	0	0
CaCO3.6H2O	0.50178	0.50219	0.5042	0.5166	0	0.5106	0.5106	0.2611	0.1065	0.1306	0.2723	0.9	0.6209				0.9	0.5016	0.5016
Ni(OH)2	0.55101	0.55108	0.551	0.5544	0.55098	0.5515	0.5515	0.704	0.1011	0.8205	1	1	0.6334				1	0.551	0.551
ZrO(OH)2	0	0	0	1	1	1	1	0	1	1	1	1	0				1	1	1
Na2NiFe(CN)6.6H	0	0	0	1	1	1	1	1	1	1	1	1	0				1	1	1
Pu	0	0	0	0.9525	0.8	0.8	0.8	0.9073	0.773	0.5397	0.7665	0	0.5097				0.8	0.8	0.8
UO2(OH)2*6H2O	0	0	0	0	0	0	0.5774	0	0.3637	0.4875	0.8671	0.7726	0.497				0	0	0
Cs	0	0	0	0.2456	0	0	0	0	0	0	0	0	0				0.16	0.16	0.16
Sr	0	0	0	0	0.86429	0	0.9351	0.9153	0.8175	0.4843	0.7	0.0765	0				1	1	1

frac. prec. solids	B in	B-SltCk	T1 in	T1-SltCk	R in	RSltCk	T2 in	T2-SltCk	BY in	BY-SltCk	S1 in	S1-SltCk	S2 in	S2-SltSlr	A1 in	A1-SltCk	A2 in	A2-SltSlr	P3	PL2	CWZr2	BP/Cplx	BP/NCplx	PASF
NaNO3		0.0994		0.042		0.1252		0.5198		0.4533		0.5638		0.6593		0.4687		0	0	0	0			0
NaNO2		0		0		0		0		0		0.031		0.589		0.1071		0.3694	0	0	0			0
NaCl		0		0		0		0.2349		0		0.3532		0.6409		0.365		0.2237	0	0	0			0
NaF		0		0		0		0		0		0		0.5545		0.5184		0	0		0.6932			0.6932
Sr(OH)2						0				0														
Na2CO3		0		0		0		0.1356		0.1914		0.2175		0.6023		0.2936		0.1935	0	0	0			0
Na3PO4		0.6286		0.5761		0		0.0531		0		0	0	0.7263		0.5457		0	0.9	0	0.9			0.9
Na2SO4		0		0		0		0		0		0		0.6063		0.2035		0.0263	0	0	0			0
Na2SiO3		0.032		0		0.2905		0.6545		0.4554		0.7249		0.761		0.7278		0.4794	0.634	1	1			1
Al2O3.3H2O		0		0		0		0		0		0		0		0		0	0.07	0.3	0			0
NaAlO2		0		0		0		0		0.2356		0.2511		0.6051		0.331		0.0942	0	0	0			0
FeO(OH)		0.9495		0.9287		0.5184		0.9402		0.7991		0.9442		0.8265		0.8678		0.702	0.9831	0.9501	0.9508			0.8002
Cr(OH)3		0		0		0.4855		0.4118		0.3329		0.6318		0.655		0.4445		0.4295	1	0	1			1
MnO2		1		1		0		0.7052		0		0.759		0.6663		0.53		0.3269	1	0	1			1
BiPO4		0.6656		0.5569		0		0		0		0		0.5599		0.3939		0	1	1	1			1
Pb(OH)2		1		1		0		0		0.6027		0		0		0		0	1	0	1			1
La2O3		0.6025		0.6025		0		0.6025		0		0		0		0		0	0.6025	0.6025	0.6025	0.6025	0.6025	0.6025
HgO		0.4458		0.2725		0		0.0375		0.6095		0.1189		0.7378		0.6597		0.3106	1	1	0.957			1
Na3cit.5H2O		0		0		0		0		0		0		0		0		0	0	0	0			0
Na Acetate		0		0		0		0		0		0		0		0		0	0	0	0			0
Na 2 Oxalate		0		0		0		0		0		0		0		0		0	0	0	0			0
Na3HEDTA		0		0		0		0		0		0		0		0		0	0	0	0			0
Na4EDTA		0		0		0		0		0		0		0		0		0	0	0	0			0
CaCO3.6H2O		0.6328		0.5836		0.5185		0.8367		0.8018		0.847		0.7761		0.7771		0.6466	0.511	0.5014	0.5082			0.5005
Ni(OH)2		0.4089		0.3985		0.5141		0.836		0.7866		0.8491		0.7693		0.7688		0.6572	1	0.5512	1			1
ZrO(OH)2		0.0933		0.0434		0		0		0		0		0.5058		0.4783		0	1	1	0.9705			0.9705
Na2NiFe(CN)6.6H		1		1		1		1		1		1		1		1		1	1	1	1			1
Pu		0		0		0.3526		0.7191		0.7287		0.7568		0.7637		0.692		0.528	0.8589	0	0.7251			0.8
UO2(OH)2*6H2O		0.1231		0.1213		0.5163		0.7498		0.7566		0.7845		0.7258		0.6487		0.5064	0.8965	0	0			0
Cs		0.0994		0.042		0.015		0.05		0.2		0.1		0.05		0.05		0.08	0.034	0	0			0
Sr		0		0		0.491		0.7198		0.6252		0.7877		0.6973		0.6834		0.5403	0.9854	0	0			1

pred. sludge ppm	MW1	MW2	1C1	1C2	2C1	2C2	224	UR/TBP	PFeCN1	PFeCN2	TFeCN	1CFeCN	R1	R2	CWR1	CWR2	P1	P2	P2'	PL1	CWP1	CWP2	CWZr1
Na	66334.7	85416	86851	66898	76652	24484.5	75516	62431.4	66551.6	63671.2	53924.4	42667.74	36763	33115	101768	19151	33010	65479		49091.51	32279	18321	101047
Al	0	0	9934	19019	0	0	0	0	0	0	3037.32	9495.289	75367	58182	170682	95574	0	0		0	98539	103182	0
Fe	3794.08	3794.3	13981	8165	25018	38973.9	14647	66801.9	36435.7	38801.4	13610.3	4821.723	38145	67807	5199.9	15436	115068	116819		122686.9	6527	16664	5650.03
Cr	36.9254	24.058	151.9	184.5	136.54	236.407	130.02	115.926	113.775	112.004	0	78.51944	30644	103389	59.76	73.426	275.22	239.16		271.365	94.683	79.29	108.997
Bi	0	0	12464	7550	15394	7631.7	9172.4	0	37715.4	43367.3	0	36084.97	0	0	0	0	0	0		0	0	0	0
La	0	0	0	0	0	0	23896	0	0	0	0	0	0	0	0	0	0	0		0	0	0	0
Hg	0	0	16.42	9.512	0	0	0	0	0	0	0	0	0	0	461.92	1336.6	0	0		0	359.08	774.21	317.92
ZrO(OH)2	0	0	727.8	523.6	0	0	0	0	0	0	0	1767.969	0	0	0	0	0	0		0	0	0	66975.5
Pb	0	0	0	0	0	0	0	0	0	0	0	0	0	0	13759	40807	0	0		8.109248	17272	44055	0
Ni	20.8451	13.581	52.77	64.1	58.728	78.9468	57.288	65.4422	5862.86	5546.07	26107.3	9134.127	2005.5	3121.1	33.735	41.45	4681.3	2413.4		4508.896	53.45	44.76	61.5308
Sr	0	0	0	0	0	0	99701	0	0	0	0	0	0	0	0	0	0	0		0	0	0	0
Mn	0	0	0	0	0	0	154.13	0	0	0	0	0	0	0	0	0	0	0		0	0	0	0
Ca	1930.38	1930.9	2343	1491	4599.3	9844.54	7097.9	10513.4	7717.71	8851.67	21725.1	7762.676	5796.7	9184.2	2732.5	7800	13231	6883.9		13124.23	3420	8399.1	3014.95
K	6.12567	0	97.74	89.55	159.65	121.313	6463.5	470.049	482.716	473.885	279.98	123.9852	224.18	198.73	32.418	61.625	81.227	126.78		375.3164	32.628	46.935	5964.63
balance	99.9908	103.15	100.3	99.92	99.935	99.9762	100.01	99.8113	101.015	100.471	101.136	101.0165	99.98	101.67	101.51	101.03	100.29	100.82		99.7232	101.75	101.12	101.065
density	1.74666	1.7467	1.291	1.222	1.2519	1.12501	1.3763	1.31537	1.37007	1.37466	1.46546	1.229691	1.4832	2.2124	1.7718	1.6539	1.2761	1.4155		1.32511	1.4113	1.5319	1.26229
vol%solids	12	12	13.7	24.9	6.8	3.4	3.9	2.8	3.7	3.2	1.4	4.8	4.5	1.9	8.1	2.9	2.2	3.9		2.2	8.1	2.9	10.5
void frac.	0.35772	0.2292	0.695	0.791	0.7704	0.94368	0.8339	0.91417	0.93451	0.923	0.89558	0.925071	0.7988	0.5737	0.6508	0.7629	0.8413	0.8077		0.861767	0.8339	0.7631	0.85731
wt.% H2O	44.3758	43.437	70.85	74.27	71.419	81.4309	55.549	60.0521	60.2034	59.0713	63.36	77.08434	51.958	36.383	24.549	47.995	66.636	59.25		55.35137	57.862	50.992	66.2596
TOC wt.%C	0	0	0	0	0	0	1.1208	0.0003	0.71016	0.40919	1.75469	0.609909	0	0	0	0	0	0		0	0	0	0
free OH-	127.111	81.655	795.9	315.9	377.59	897.555	201.33	307.062	389.594	269.093	515.612	1685.321	106.71	100.74	95.057	91.11	2320.2	2011.3		583.0234	158.56	101.1	2776.4
OH-	119575	118957	34503	44187	23162	36403.3	60750	71792.8	36230.1	42810	32234.3	25393.48	213418	291704	400335	236394	112247	122396		115126.9	210629	236537	57708.7
NO3-	2216.81	1656	17966	19712	48000	36018.5	59809	103244	111458	109043	401.2	2785.915	1470.7	0.0003	19981	24705	1E-06	7E-10		92087.34	24765	20899	13290.1
NO2-	241.047	0	6379	9282	72.236	61.7331	0	12915	5158.15	5578.86	70695.2	22737.02	60583	33402	24903	6579.7	13673	19092		15740.48	21948	6747.2	299.93
CO3--	64793.1	91097	3509	2232	6886.3	14739.8	10627	23332.9	11555.4	13253.2	32564.7	11124.33	8679.1	13751	4091.3	11679	19811	10307		19650.33	5120.6	12576	4514.15
PO4---	21733.9	21756	97992	68393	76999	11865.8	6658.9	8601.14	25581.2	28018.2	7556.03	33925.52	0	0	0	0	0	0		5947.278	0	0	0
SO4--	4510.56	2938.8	3324	4038	2978.8	2167.73	93.734	9476.15	12019.5	11832.4	940.646	1450.496	991.88	753.43	454.65	558.62	2771.3	8769.3		3512.823	720.35	603.23	100.675
SiO3--	24.9335	16.245	1375	1151	1749.2	459.509	0	0	1254.44	1336.6	0	2680.201	224.58	6063.1	318.57	0	13694	30246		0	336.49	0	0
F-	0	0	2433	2982	2613.3	1848.06	28090	0	2728.14	2685.67	0	3270.637	0	0	0	0	0	0		0	0	0	79573.5
Cl-	25.5332	16.636	407.4	373.3	665.46	505.662	641.69	2526.98	2012.08	1975.26	1167.02	516.7995	934.43	828.34	135.13	256.87	338.57	528.46		1564.407	136	195.64	139.703
C6H5O7---	0	0	0	0	0	0	0	0	0	0	0	0	0	0	0	0	0	0		0	0	0	0
EDTA----	0	0	0	0	0	0	0	0	0	0	0	0	0	0	0	0	0	0		0	0	0	0
HEDTA---	0	0	0	0	0	0	0	0	0	0	0	0	0	0	0	0	0	0		0	0	0	0
	0	0	0	0	0	0	0	0	0	0	0	0	0	0	0	0	0	0		0	0	0	0
glycolate-	0	0	0	0	0	0	0	0	0	0	0	0	0	0	0	0	0	0		0	0	0	0
acetate-	0	0	0	0	0	0	0	0	0	0	0	0	0	0	0	0	0	0		0	0	0	0
oxalate--	0	0	0	0	0	0	41105	0	0	0	0	0	0	0	0	0	0	0		0	0	0	0
DBP	0	0	0	0	0	0	0	4.44068	0	0	0	0	0	0	0	0	0	0		0	0	0	0
butanol	0	0	0	0	0	0	0	1.56757	0	0	0	0	0	0	0	0	0	0		0	0	0	0
	0	0	0	0	0	0	0	0	0	0	0	0	0	0	0	0	0	0		0	0	0	0
NH3	0.0342	0	2.362	7.684	0.0006	0.00086	0	11.2186	3.81314	4.60181	2858.32	434.4607	1508.8	2524.8	2.1108	0.6413	1780.3	2908		22.38488	1.8322	0.3689	8890.4
NiFe(CN)6--	0	0	0	0	0	0	0	0	26692.2	15379.9	65952	22924.12	0	0	0	0	0	0		0	0	0	0
Pu-239 (µCi/g)	0.00371	0	0.006	0.017	0.0118	0.01047	0.01	0.0032	0.00152	0.0015	0	0.020309	0.0108	0.0137	1.4406	3.0815	0.2752	1.0361	0	4.279232	0.5815	1.205	0.53949
U-238 (M)	270906	269482	105.4	121.6	15.4	10.8905	0	25287.5	18541.3	21258.1	44706.2	141.9001	3461.6	28858	24647	69903	5859.7	29481		0	16634	32142	392.287
Cs-137 (µCi/g)	0.48095	0	9.444	23.93	0.1533	0.2382	0	1.0183	9.7169	11.1976	1218.53	594.1425	53.444	84.293	1.4711	2.1055	171.32	396.34		47.67283	1.5362	1.3002	0.97256
Sr-90 (µCi/g)	4.20389	0	0.084	0.214	0.0066	0.04863	0	16.7397	2.35508	2.31842	0	0.236822	703.38	3538	1.1903	1.7272	6316.8	9669.9		16.96031	1.2473	1.0666	0.80607

pred. sludge ppm	OWW1	OWW2	OWW3	Z	HS	TH1	TH2	AR	B	BL	SRR	CSR In	CSR	DE	CEM	NIT	Salt Slurry	DW	N
Na	6164.35	12644.5	14407	27796	29003.5	62271	60408	99013	47576	77493	84795		122507	628983	0	6769.7	181276	15388	20091
Al	0	0	0	171852	0	15269	14812	1475.5	23126	82370	0		4294.3	5534.4	25844	0	37649	0	0
Fe	227792	144324	224495	54435	218740	48643	47187	55888	39079	62068	48019		11463	12888	15578.4	0	0	150176	148978
Cr	168.341	250.079	165.45	156.9	236.939	312.47	303.12	567.51	61.484	0.003	0		559.45	0	0	0	0	28157	27932
Bi	0	0	0	0	0	0	0	1.5486	0	0	0		9.6306	0	0	0	0	0	0
La	0	0	0	0	0	0	0	0	0	0	0		0.0001	0	0	0	0	0	0
Hg	0	0	0	0	0	0	0	0.0466	0	0	0		0.0962	0	0	0	0	0	0
ZrO(OH)2	0	0	0	0	0	0	0	0.0241	0	0	0		2.4227	0	0	0	0	0	0
Pb	0	0	0	0	21703.8	0	0	7.8744	0.1225	0	0		13.212	0	0	0	0	0	0
Ni	13927.7	8859.34	13726	3309	7510.4	1866.5	1810.6	6272.6	1720.6	35690	0		10730	0	0	0	0	15833	15706
Sr	0	0	0	0	0	0	0	0	0	0	0		0.004	0	0	0	0	0	0
Mn	0	11579.4	19.277	0	0	0	0	93.48	0	0	0		80.365	0	0	70.104	0	0	0
Ca	39042.4	24890.2	38848	9717.3	111.858	5447	5284.1	3377.1	6214.9	4103.8	3137.9		36182	8221.5	440880	0	0	24514	24319
K	15.8224	317.318	85.876	227.67	1975.12	816.16	791.74	185.13	63.845	152.89	259.06		312.61	0	0	49.892	363.46	13.005	12.901
balance	100.31	100.195	100.11	100.37	99.6819	100.9	100.8	100.95	100.73	100.59	100.33		101.86	100.4	100.21	99.467	103.6	100.29	100.29
density	1.55322	1.33755	1.576	1.7282	1.44728	1.2494	1.2879	1.3008	1.4319	1.9866	1.7469		1.689	0.39	1.9	1.0188	1.6393	1.488	1.5
vol%solids	0.6	1.1	0.6	2.3	1.2	5.8	5.8	3.1	0.5	0.68	2.6		1	100	100	13.6	80	1	1
void frac.	0.62713	0.80232	0.6254	0.549	0.82257	0.9349	0.9349	0.8307	0.8459	0.5749	0.8505		0.6426	0	0	1	0.8	0.7152	0.7152
wt.% H2O	42.3178	58.19	40.504	28.191	43.5675	64.436	65.026	69.261	65.215	33.614	49.218		54.476	-6	8	94.733	43.115	52.516	51.754
TOC wt.%C	0.35321	0.20164	0.106	0	1.40796	0.0203	0.0871	0	0.0426	0.1707	2.9914		0.1546	0	0	0	0	0	0
free OH-	279.152	424.018	432.65	1606	1142.27	487.35	610.52	700.12	2068.2	957.8	1471.4		2830.9	0	0	-8235	5471.6	422.65	419.28
OH-	216300	151219	213328	379396	208685	78768	83987	58293	115701	265188	103656		55006	0	310742	-8235	98364	174074	172685
NO3-	5771.74	14072.6	23250	55177	6.4E-13	128150	0.0189	0.0002	4E-19	26.865	0.1392		34331	0	0	48685	105554	4683.7	4646.4
NO2-	186.146	276.53	182.95	206.71	28518.4	437.67	92659	22630	7666	23000	14573		17978	0	0	0	118909	532.15	307.95
CO3--	63361.2	47258.7	64991	18047	167.48	8155.6	7911.6	10301	9305.3	10668	11669		59133	0	0	0	42099	36501	36210
PO4---	0	0	0	4.2678	0	6420.1	6228	1422.5	0	275.66	0		492.28	0	0	0	5517.5	0	6796.5
SO4--	155.489	230.987	152.82	209.67	3687.61	3896.3	3779.7	5016.8	908.69	1226.8	4788.9		4690.4	0	34884.9	0	1674.2	27815	27593
SiO3--	0	0	0	0	0	0	0	48953	24106	33741	28988		52987	408385	94175.4	0	0	0	0
F-	0	0	0	0	0	1712.6	1661.3	4.7848	0	0	0		44.294	0	0	0	662.31	0	0
Cl-	65.9516	146.962	300.77	1301.5	992.314	1688.1	1637.6	404.23	266.12	637.3	1079.8		984.57	0	0	0	12752	54.206	53.773
C6H5O7---	0	0	0	0	4307.27	0	0	0	1117.7	823.14	0		2017	0	0	0	0	0	0
EDTA----	0	0	0	0	13127.3	0	0	0	0	0	21121		55.023	0	0	0	0	0	0
HEDTA---	0	0	0	0	0	0	0	0	0	0	40190		106.03	0	0	0	0	0	0
	0	0	0	0	0	0	0	0	0	0	0		0	0	0	0	0	0	0
glycolate-	0	0	0	0	0	0	0	0	0	4355	11000		183.8	0	0	0	0	0	0
acetate-	0	0	0	0	17144	0	0	0	0	0	0		0	0	0	0	0	0	0
oxalate--	0	0	0	0	0	0	0	0	0	0	0		7E-05	0	0	0	0	0	0
DBP	5150.18	2940.1	1545.6	0	0	295.94	1269.7	0	0	0	3.1154		1421.8	0	0	0	0	0	0
butanol	1818.03	1037.86	545.61	0	0	104.47	448.19	0	0	0	1.0997		0	0	0	0	0	0	0
	0	0	0	0	0	0	0	0	0	0	0		0	0	0	0	0	0	0
NH3	0	0	0	0	5232.87	0.0019	9476.3	2521.6	1693.2	755.96	1116.8		165.08	0	0	0	0	0	0
NiFe(CN)6--	0	0	0	0	0	0	0	0	0	0	0		0	0	0	0	0	0	0
Pu-239 (µCi/g)	0	0	0	14.99	0	0	0	7.2753	14.277	2.6118	2.1827		1.878	0	0	0	0	0	0
U-238 (M)	0	0	0	0	0	381.37	18049	440.86	76534	67145	136708		58091	0	0	0	0	0	0
Cs-137 (µCi/g)	0	0	0	0	0	0.1033	458.91	176.45	189.18	0	23.787		18.583	0	0	0	0	0	0
Sr-90 (µCi/g)	0	0	0	0	12460.6	0.085	6559.1	9094	21272	2367	4726.4		26.594	0	0	0	0	0	0

pred. sludge ppm	B in	B-SltCk	T1 in	T1-SltCk	R in	RSltCk	T2 in	T2-SltCk	BY in	BY-SltCk	S1 in	S1-SltCk	S2 in	S2-SltSlr	A1 in	A1-SltCk	A2 in	A2-SltSlr	P3	PL2	CWZr2	BP /Cplx	BP /NCplx	PASF
Na		137909		137493		136532		175298		176264		198021		218714		206757		0	66836	11082	99104			888.86
Al		3931.1		2958.7		24687		18060		35783		32089		37697		37085		0	13073	0	0			0
Fe		7489.9		7985.9		638.53		492.35		554.38		407.07		92.359		398.19		0	92966	89807	15924			61271
Cr		201.16		176.06		7937.2		1948.2		1628.7		3166.3		1573.5		1926.5		0	0	313.1	0			0
Bi		6295.6		6120.7		1.0579		228.92		116.19		163.58		663.12		872.39		0	0	0	0			0
La		0		0		3E-06		0.0002		0.2771		1.3458		1.9869		0.8756		0	0	0	0			0
Hg		6.6911		5.0404		0.1595		1.1758		4.4931		1.1571		2.6758		4.7868		0	0	0	329.62			0
ZrO(OH)2		233.89		196.41		0.224		65.917		16.73		43.84		196.05		363.64		0	0	0	66243			0
Pb		0		0		26.117		113.91		726.14		124.05		248.45		138.28		0	0	6.7754	0			0
Ni		310.42		431.47		594.91		417.63		489.71		367.04		116.62		339.4		0	0	5551.4	0			0
Sr		0		0		5E-06		6E-05		0.1945		0.8843		0.843		0.7259		0	0	0	0			0
Mn		0		0		2.024		165.3		110.45		189.52		71.545		173.38		0	0	248.1	0			0
Ca		2375.9		2925.6		2064.3		1514.4		1817.9		1317.3		429.01		1285.6		0	5552.6	15580	2980.2			49695
K		400.21		361.14		666.75		961.47		910.84		1145.7		2209.1		2426.8		0	192.37	201.58	5849			5.0458
balance		100.53		100.47		104.18		103.14		103.72		103.31		102.7		102.87		100	101.71	100.03	100.95			100.05
density		1.5284		1.5535		1.491		1.5859		1.6179		1.7217		1.7997		1.7829		0.5	1.7786	1.1827	1.2763			1.217
vol%solids		17.683		11.446		13.82		55.385		48.966		55.173		99		45.523		90	3.9	2	10.5			0.6
void frac.		0.7496		0.731		0.8732		0.7922		0.779		0.7221		0.5624		0.6159		0.5	0.789	0.8882	0.8503			0.7842
wt.% H2O		55.646		57.172		50.215		40.126		37.378		30.542		26.057		28.906		100	49.287	74.594	64.507			75.533
TOC wt.%C		0.0002		0.0002		0.0066		0.5382		0.4515		0.6976		1.4025		0.9431		0	0	0.0369	0			0
free OH-		202.41		612.14		40.195		3427.7		3398.5		3252.1		5474.5		4350.9		0	10827	209.23	1220.1			175.45
OH-		17328		15893		72059		51933		96679		88412		102044		100793		0	173353	85314	64995			56063
NO3-		152915		123231		219998		271565		245767		269080		169054		213834		0	7E-10	11404	16204			2648.7
NO2-		8996.4		8577.1		57175		45906		49532		69106		122324		73805		0	12705	779.26	261.64			0
CO3--		8610.8		9581.3		3309.2		17501		18603		18329		22798		21375		0	8313.6	27933	4462.1			74077
PO4---		87109		103240		31.017		7943.4		4023.3		6015.3		17633		22810		0	0	4969	0			0
SO4--		9174.3		8559.5		2847.1		13997		11357		14249		30636		22864		0	5791	292.34	0			0
SiO3--		580.2		423.83		2424.5		1878.4		1359.2		2042.6		1150.5		2761.3		0	24077	0	0			0
F-		1967.6		1787.4		5.5034		1132.4		699.45		806.16		1522.3		1604.1		0	254.94	0	78720			0
Cl-		2044.9		1860.7		2770.2		3022.7		2784.3		2580.1		2018.7		2137.3		0	801.83	104.26	110.32			21.032
C6H5O7---		0		0		51.018		2082.6		2803.3		3074.1		5636.6		2918		0	0	0	0			0
EDTA----		0		0		3.0283		1925.2		958.85		2421.6		5219.5		4243.6		0	0	0	0			0
HEDTA---		0		0		2.3928		3556.6		123.16		4357.1		9305.3		7145.6		0	0	0	0			0
		0		0		0		0		0		0		0		0		0	0	0	0			0
glycolate-		0		0		28.59		2976.3		783.56		3752.2		7301.9		4147.1		0	0	0	0			0
acetate-		0		0		2.3332		73.963		1168.8		173.24		432.08		638.76		0	0	0	0			0
oxalate--		0		0		1E-06		5E-05		0.1502		0.7296		1.0771		0.4747		0	0	0	0			0
DBP		2.9469		2.7795		50.249		1819.7		3306.5		2359.7		4547.1		2679		0	0	538.46	0			0
butanol		1.0403		0.9812		17.738		642.36		1167.2		832.97		1605.1		945.69		0	0	190.08	0			0
		0		0		0		0		0		0		0		0		0	0	0	0			0
NH3		10.06		9.8333		353.72		127.37		108.12		176.92		239.45		1106.9		0	1884.3	0.1804	8721.2			547.75
NiFe(CN)6--		0		0		0		0		0		0		0		0		0	0	0	0			0
Pu-239 (µCi/g)		0.0095		0.011		0.0972		0.0766		0.107		0.0746		0.0351		0.0763		0	2.6321	0.004	0.6063	0	0	0
U-238 (M)		939.73		1164.5		5405.5		2836		3793		2857.7		910.7		2102.7		0	118408	82.768	503.7			0
Cs-137 (µCi/g)		14.262		12.158		195.28		154.66		133.24		189.97		315.96		192.53		0	2503.7	22.579	1.4979			0
Sr-90 (µCi/g)		11.26		11.011		176.17		98.112		80.267		117.13		34.059		75.771		0	32841	19.569	1.275			0

pred. su. ppm	MW1	MW2	1C1	1C2	2C1	2C2	224	UR/TBP	PFeCN1	PFeCN2	TFeCN	1CFeCN	R1	R2	CWR1	CWR2	P1	P2	P2'	PL1	CWP1	CWP2	CWZr1
Na	40398.6	40655	40759	36729	45293	27870.8	36517	78243.1	77980.7	77793.1	62600.4	37535.11	59535	74325	67929	37321	17186	28259		67159.91	47516	33297	12322.3
Al	0	0	4835	622.1	0	0	0	0	0	0	636.35	4358.24	11421	23349	26282	15239	0	0		0	19982	15347	0
Fe	104.319	104.23	102.9	104.8	103.39	106.643	104.98	97.343	97.4029	97.4229	0	103.6998	97.466	91.212	91.529	100.5	108.92	106.87		99.41375	97.243	101.21	109.872
Cr	168.349	171.13	260	267.6	205.36	269.103	201.7	145.286	145.377	145.413	0	96.91113	1361.3	1273.9	133.35	143.09	406.86	400.81		371.2424	139.38	144.1	157.785
Bi	0	0	770.1	784.2	774.02	798.119	785.7	0	728.413	728.578	0	776.1434	0	0	0	0	0	0		0	0	0	0
La	0	0	0	0	0	0	783.39	0	0	0	0	0	0	0	0	0	0	0		0	0	0	0
Hg	0	0	1.849	1.882	0	0	0	0	0	0	0	0	0	0	1.6438	1.8032	0	0		0	1.7451	1.8163	1.97173
Zr	0	0	252.1	256.7	0	0	0	0	0	0	0	254.0906	0	0	0	0	0	0		0	0	0	269.197
Pb	0	0	0	0	0	0	0	0	0	0	0	0	0	0	271.66	298	0	0		11.0939	288.35	300.11	0
Ni	95.0362	96.608	90.32	92.97	88.329	89.8654	88.868	82.0165	92.0919	92.113	94.7032	98.12095	92.216	86.299	75.28	80.775	103.06	101.11		94.05918	78.681	81.348	89.0726
Sr	0	0	0	0	0	0	164.71	0	0	0	0	0	0	0	0	0	0	0		0	0	0	0
Mn	0	0	0	0	0	0	239.09	0	0	0	0	0	0	0	0	0	0	0		0	0	0	0
Ca	336.902	336.63	332.3	338.4	333.9	344.408	339.05	314.376	314.569	314.633	323.231	334.9249	314.77	294.83	295.6	324.58	351.77	345.15		321.1197	314.07	326.88	354.861
K	27.9279	28.39	167.3	129.9	240.12	138.091	10026	589.096	616.797	615.24	410.284	153.0264	363.04	625.96	72.34	120.09	120.08	212.47		513.4537	48.029	85.299	8634.46
balance	100.018	100.02	99.37	99.8	99.886	99.9767	100.02	100.026	99.89	99.8804	99.9734	99.46616	98.616	97.156	96.776	98.204	100.07	100.1		100.0528	97.561	98.192	101.567
density	1.07097	1.0715	1.085	1.066	1.0803	1.0473	1.0639	1.14809	1.14739	1.14715	1.11664	1.077022	1.1466	1.2242	1.2199	1.1124	1.026	1.0457		1.12398	1.1497	1.1046	1.01711
vol%solids	12	12	13.7	24.9	6.8	3.4	3.9	2.8	3.7	3.2	1.4	4.8	4.5	1.9	8.1	2.9	2.2	3.9		2.2	8.1	2.9	10.5
void frac.	0.35772	0.2292	0.695	0.791	0.7704	0.94368	0.8339	0.91417	0.93451	0.923	0.89558	0.925071	0.7988	0.5737	0.6508	0.7629	0.8413	0.8077		0.861767	0.8339	0.7631	0.85731
wt.% H2O	89.0129	88.902	87.74	88.98	85.492	91.1927	84.728	73.5572	73.2867	73.3076	78.1582	88.95057	78.528	73.832	76.881	86.416	94.864	91.551		76.37869	83.498	87.892	95.1018
TOC wt.%C	0	0	0	0	0	0	0.0116	0.00038	0	0	0	0	0	0	0	0	0	0		0	0	0	0
species																							
OH	579.519	580.84	1362	458.1	567.92	1021.69	312.31	384.83	497.809	349.361	755.583	2080.076	172.81	317.31	212.12	177.55	3429.9	3370.7		797.6083	233.41	183.74	4019.14
NO3	10477.6	11780	32463	31670	72258	41045.9	92778	139476	149727	149758	130766	31410.64	87732	78669	45241	48816	11940	9289.6		142580.6	36865	38284	19308.9
NO2	823.844	0	9648	11173	61.394	36.1738	0	8704.22	1166.96	1167.24	7013.41	7309.186	34785	46843	55086	12323	11355	25103		9217.672	32004	12038	382.233
CO3	22050.8	22088	497.6	506.7	499.93	515.667	507.64	9984.96	470.99	471.086	537.779	-113.646	471.3	441.43	442.59	485.98	526.69	516.77		480.7982	470.24	489.42	531.317
PO4	13304.9	13294	13130	13369	13195	9921.75	4220.4	10779.5	11117.3	11120.1	11072.7	13232.59	0	0	0	0	0	0		8136.205	0	0	0
SO4	20564.4	20904	5689	5856	4480.2	2467.54	145.4	11876.1	15358.1	15361.9	1378.43	1790.247	1606.3	2373.2	1014.5	1088.6	4096.8	14696		4805.736	1060.4	1096.3	145.739
Si	113.676	115.56	879.9	895.9	884.34	523.06	0	0	832.23	832.419	0	886.7637	363.69	780.04	710.88	0	930.7	913.8		0	495.33	0	0
F	0	0	4165	4278	3930.5	2103.65	4286.1	0	3485.91	3486.77	0	4036.721	0	0	0	0	0	0		0	0	0	4485.63
Cl	116.41	118.34	697.3	541.3	1000.9	575.596	995.41	3166.98	2570.95	2564.47	1710.16	637.85	1513.2	2609.1	301.53	500.57	500.51	885.64		2140.196	200.2	355.55	202.236
C6H5O7	0	0	0	0	0	0	0	0	0	0	0	0	0	0	0	0	0	0		0	0	0	0
EDTA	0	0	0	0	0	0	0	0	0	0	0	0	0	0	0	0	0	0		0	0	0	0
HEDTA	0	0	0	0	0	0	0	0	0	0	0	0	0	0	0	0	0	0		0	0	0	0
NTA	0	0	0	0	0	0	0	0	0	0	0	0	0	0	0	0	0	0		0	0	0	0
glycolate	0	0	0	0	0	0	0	0	0	0	0	0	0	0	0	0	0	0		0	0	0	0
acetate	0	0	0	0	0	0	0	0	0	0	0	0	0	0	0	0	0	0		0	0	0	0
oxalate	0	0	0	0	0	0	424.68	0	0	0	0	0	0	0	0	0	0	0		0	0	0	0
DBP	0	0	0	0	0	0	0	5.56535	0	0	0	0	0	0	0	0	0	0		0	0	0	0
butanol	0	0	0	0	0	0	0	1.96458	0	0	0	0	0	0	0	0	0	0		0	0	0	0
	0	0	0	0	0	0	0	0	0	0	0	0	0	0	0	0	0	0		0	0	0	0
NH3	1.51678	0	8.257	16.99	0.0013	0.00076	0	12.0036	0.21569	0.21576	0	0.062179	219.05	381.02	11.397	2.1069	114.9	407.03		12.33062	3.9018	1.1451	13065.6
NiFe(CN)6–	0	0	0	0	0	0	0	0	0	0	0	0	0	0	0	0	0	0		0	0	0	0
Pu-239 (µCi/g)																							
U-238 (M)	889.251	888.53	180.4	176.3	23.162	12.3967	0	829.153	829.668	829.857	853.239	175.1375	830.83	777.52	780.23	855.89	928.5	911.02		0	828.93	862.75	567.878
Cs-137 (Ci/L)																							
Sr-90 (Ci/L)																							

pred. su. ppm	OWW1	OWW2	OWW3	Z	HS	TH1	TH2	AR	B	BL	SRR	CSR in	CSR	DE	CEM	NIT	Salt Slurry	DW	N
Na	14900.4	24831.9	34280	75573	47138.4	71790	71800	29594	14894	67467	69469		80996			6769.7	154984	4470.1	14287
Al	0	0	0	5886.5	0	7387.4	7388.5	562.07	2028.2	12113	0		9559.2			0	33160	0	0
Fe	109.009	107.153	105.47	96.523	103.168	96.394	96.408	106.26	108.71	96.023	99.102		93.771			0	0	111.02	109.21
Cr	406.912	400.044	393.69	426.59	385.089	360.23	360.28	844.74	101.28	0.009	0		1245.3			0	0	414.43	407.65
Bi	0	0	0	0	0	0	0	2.3052	0	0	0		21.438			0	0	0	0
La	0	0	0	0	0	0	0	0	0	0	0		0.0003			0	0	0	0
Hg	0	0	0	0	0	0	0	0.0694	0	0	0		0.2141			0	0	0	0
Zr	0	0	0	0	0	0	0	0.0358	0	0	0		5.3928			0	0	0	0
Pb	0	0	0	0	306.2	0	0	11.721	0.2018	0	0		29.409			0	0	0	0
Ni	103.138	101.381	99.786	91.324	97.6116	91.202	91.215	100.53	102.79	90.851	0		88.836			0	0	105.04	103.32
Sr	0	0	0	0	0	0	0	0	0	0	0		6E-05			0	0	0	0
Mn	0	474.356	45.869	0	0	0	0	139.14	0	0	0		178.89			70.104	0	0	0
Ca	352.05	346.053	340.61	311.72	181.799	311.36	311.41	343.15	351.07	310.11	320.28		315.86			0	0	358.54	352.68
K	38.2459	507.604	204.34	619	3210.1	940.92	941.06	275.57	105.17	454.09	472.27		695.87			49.892	494.79	26.877	26.438
balance	100.773	100.32	100.28	99.584	100.121	99.18	99.351	99.869	99.826	98.607	100.03		99.354			99.467	96.549	100.06	100.06
density	1.02463	1.04215	1.059	1.1579	1.08258	1.1592	1.159	1.052	1.0276	1.1634	1.1267		1.1808			1.0188	1.5052	1.0067	1.0234
vol%solids	0.6	1.1	0.6	2.3	1.2	5.8	5.8	3.1	0.5	0.68	2.6		1			13.6	80	1	1
void frac.	0.62713	0.80232	0.6254	0.549	0.82257	0.9349	0.9349	0.8307	0.8459	0.5749	0.8505		0.6426			1	0.8	0.7152	0.7152
wt.% H2O	94.6986	92.3315	88.776	74.379	82.2641	74.482	76.861	90.678	95.597	77.458	73.58		74.065			94.733	51.848	98.281	95.973
TOC wt.%C	0.85377	0.32255	0.2522	0	2.28832	0.0234	0.1035	0	0.0701	0.5069	5.4534		0.4166			0	0	0	0
species																			
OH	674.765	678.289	1029.5	4366.4	1856.5	561.84	725.65	1042.1	3407	2844.7	2682.4		6301.5			-8235	7448.8	873.52	859.24
NO3	13951.4	22511.6	55323	150021	57558.1	147808	50329	18950	9109.9	87097	28953		76422			48685	120136	9680.1	9521.9
NO2	449.951	442.357	435.33	562.03	3645.64	453.25	72792	19625	5869.4	3749.2	5086.1		40020			0	100851	1099.8	631.08
CO3	12382.9	22511.6	16752	9975.6	272.199	466.19	466.26	8320.7	525.64	13898	13188		11512			0	15947	117.36	115.44
PO4	0	0	0	11.603	0	7401.4	7402.5	2117.3	0	818.7	0		1095.8			0	7511.3	0	13928
SO4	375.846	369.502	363.63	570.07	5993.36	4491.8	4492.5	7467.5	1496.9	3643.6	8730.2		10441			0	2279.2	382.79	376.53
Si	0	0	0	0	0	0	0	908.59	930.11	821.06	847.99		833.26			0	0	0	0
F	0	0	0	0	0	1974.3	1974.6	7.1221	0	0	0		98.598			0	901.64	0	0
Cl	159.418	235.09	715.67	3538.7	1612.78	1946.2	1946.4	601.7	438.39	1892.8	1968.5		2191.6			0	3295.4	112.03	110.2
C6H5O7	0	0	0	0	7000.47	0	0	0	1841.2	2444.7	0		4489.9			0	0	0	0
EDTA	0	0	0	0	21335.4	0	0	0	0	0	38505		122.48			0	0	0	0
HEDTA	0	0	0	0	0	0	0	0	0	0	73267		236.02			0	0	0	0
NTA	0	0	0	0	0	0	0	0	0	0	0		0			0	0	0	0
glycolate	0	0	0	0	0	0	0	0	0	12934	20053		409.13			0	0	0	0
acetate	0	0	0	0	27863.6	0	0	0	0	0	0		0			0	0	0	0
oxalate	0	0	0	0	0	0	0	0	0	0	0		0.0001			0	0	0	0
DBP	12449	4703.19	3677.8	0	0	341.18	1509.1	0	0	0	5.6794		3164.9			0	0	0	0
butanol	4394.52	1660.24	1298.3	0	0	120.44	532.71	0	0	0	2.0049		1117.2			0	0	0	0
	0	0	0	0	0	0	0	0	0	0	0		0			0	0	0	0
NH3	0	0	0	0	4.28626	0.0023	923.06	237.75	46.085	3.1191	15.617		367.46			0	0	0	0
NiFe(CN)6--	0	0	0	0	0	0	0	0	0	0	0		0			0	0	0	0
Pu-239 (µCi/g)																			
U-238 (M)	0	0	0	0	0	439.67	821.82	656.22	926.65	818.54	845.38		838.43			0	0	0	0
Cs-137 (Ci/L)																			
Sr-90 (Ci/L)																			

pred. su. ppm	B in	B-SltCk	T1 in	T1-SltCk	R in	RSltCk	T2 in	T2-SltCk	BY in	BY-SltCk	S1 in	S1-SltCk	S2 in	S2-SltSlr	A1 in	A1-SltCk	A2 in	A2-SltSlr	P3	PL2	CWZr2	BP/Cplx	BP/NCplx	PASF
Na		94938		95062		112301		141650		140834		163155		183752		172197		0	57337	14409	11112			1376.5
Al		6622.3		5220.6		30949		25455		29969		29420		29643		28370		0	7780.6	0	0			0
Fe		92.297		92.749		81.998		21.201		77.543		17.285		31.791		36.828		0	101.03	109.12	109.81			111.52
Cr		338.87		310.66		1146.1		1138.4		1083		1070		1080.1		1078.8		0	0	407.1	0			0
Bi		690.75		694.14		1.3262		322.66		167.41		256.83		581.59		562.69		0	0	0	0			0
La		0		0		3E-06		0.0001		0.3993		2.1129		3.9997		1.6451		0	0	0	0			0
Hg		1.6576		1.6657		0.1999		1.5366		1.3925		1.4117		1.3941		1.3411		0	0	0	1.9734			0
Zr		226.14		227.24		0.2809		92.908		24.106		68.828		193.27		184.71		0	0	0	269.04			0
Pb		0		0		32.74		160.55		230.14		194.76		500.15		259.81		0	0	8.8095	0			0
Ni		87.326		87.753		77.561		52.18		73.364		44.478		53.42		59.11		0	0	103.14	0			0
Sr		0		0		7E-07		3E-05		0.0839		0.4442		0.841		0.3459		0	0	0	0			0
Mn		0		0		2.5374		39.994		159.15		38.677		47.49		75.422		0	0	322.59	0			0
Cu		298.08		299.54		264.93		188.38		250.42		162.05		190.74		214.45		0	326.47	352.42	354.88			360.2
K		674.19		637.24		835.84		1355.2		1312.4		1798.7		4447.1		4559.4		0	392.26	262.11	8631.8			7.8142
balance		99.104		99.325		96.261		97.368		96.944		97.003		97.689		97.567		100	100.38	100.06	101.42			100.1
density		1.2104		1.2044		1.3622		1.4203		1.4414		1.5186		1.5896		1.5409		1	1.1056	1.0241	1.0171			1.002
vol%solids		17.683		11.446		13.82		55.385		48.966		55.173		99		45.523		90	3.9	2	10.5			0.6
void frac.		0.7496		0.731		0.8732		0.7922		0.779		0.7221		0.5624		0.6159		0.5	0.789	0.8882	0.8503			0.7842
wt.% H2O		68.357		68.569		60.8		54.129		53.953		47.268		40.222		44.166		100	87.097	95.386	94.866			99.388
TOC wt.%C		0.0003		0.0003		0.0083		0.7586		0.6505		1.0953		2.8233		1.7719		0	0	0.048	0			0
species																								
OH		340.97		1080.1		50.39		4831.2		4896.8		5105.7		11020		8174.5		0	22078	272.04	1800.6			271.72
NO3		143452		144155		127387		120244		120512		112760		114604		111723		0	9729.5	15180	23953			4102
NO2		15155		15134		71676		64703		71370		101589		100139		102483		0	18689	751.86	356.52			0
CO3		8959.3		9625.5		670.58		16765		15427		16613		17660		17102		0	488.81	6516.6	531.34			29.313
PO4		11772		11829		38.884		10058		5797.1		9444		9498.4		9413.5		0	0	6460.8	0			0
SO4		15455		15103		3569.1		19728		16364		22370		24019		24518		0	11809	380.11	0			0
Si		789.2		747.84		701.28		549.23		662.84		485.9		546.02		584.97		0	863.87	0	0			0
F		3314.6		3153.8		6.8992		1596.1		1007.8		1265.7		3064.5		3013.7		0	519.86	0	4483.2			0
Cl		3444.8		3283.2		3472.8		4260.3		4011.8		4050.7		4063.8		4015.6		0	1635	135.57	162.8			32.571
C6H5O7		0		0		63.956		2935.3		4039.3		4826.4		11347		5482.4		0	0	0	0			0
EDTA		0		0		3.7963		2713.5		1381.6		3801.9		10507		7972.9		0	0	0	0			0
HEDTA		0		0		2.9996		5013		177.45		6840.6		18732		13425		0	0	0	0			0
NTA		0		0		0		0		0		0		0		0		0	0	0	0			0
glycolate		0		0		35.841		4194.9		1129		5890.9		14699		7791.5		0	0	0	0			0
acetate		0		0		2.9249		104.25		1684.1		271.99		869.8		1200.1		0	0	0	0			0
oxalate		0		0		2E-06		8E-05		0.2164		1.1454		2.1683		0.8918		0	0	0	0			0
DBP		4.9643		4.9045		62.993		2564.8		4764.3		3704.7		9153.5		5033.3		0	0	700.12	0			0
butanol		1.7524		1.7313		22.237		905.38		1681.8		1307.8		3231.2		1776.8		0	0	247.15	0			0
		0		0		0		0		0		0		0		0		0	0	0	0			0
NH3		16.946		17.351		443.43		179.53		155.78		277.76		482.04		2079.7		0	265.19	0.2457	13076			849.37
NiFe(CN)6--		0		0		0		0		0		0		0		0		0	0	0	0			0
Pu-239 (µCi/g)																								
U-238 (M)		786.77		790.63		699.32		567.36		660.98		513.43		496.15		614.01		0	861.72	107.62	743.33			0
Cs-137 (Ci/L)																								
Sr-90 (Ci/L)																								

	MW1	MW2	1C1	1C2	2C1	2C2	224	UR/TBP	PFeCN1	PFeCN2	TFeCN	1CFeCN	R1	R2	CWR1	CWR2	P1	P2	P2'	PL1	CWP1	CWP2	CWZr1
B	7		2990		219	194		4472	172														
B'																							
BY	1		110	1	3	13	5	501	285	819	470	2	23	7	15	17	553	700		159	3,723	13,203	
BY'																							
A1			4673	66	2	9	5	66		18	20	5	479	25	511	22	326	139		20	19		1650
A1'																							
T1	319		3059	962	79			6465				1034											
T1'																							
R				1					3	2	2		7,796	6,697	457	465	2	1		1	9	75	
R'																							
T2			1098	884	63	176		4420	245	105	49	318	4,361	869	1,082	1,859	2110	1239		110	312	2606	
T2'																							
S1			538	172	14	146	37	1091	142	134	107	115	10452	643	1352	750	941	495		133	436	2071	
S1'																							
S2			113	2319		2	1	22	10	8	3	1			7	129	70	36		7	11	46	
S2'																							
A2																							
A2'																							
CSR in	0.0	0.0	5.0	10.5	0.4	71.3	0.0	292.3	58.1	24.2	5.7	8.5	2681.7	1728.8	36.8	28.2	20318.0	5963.5	0.0	625.4	259.8	1433.6	15.2
AR in	0.0	0.0	0.5	0.3	0.1	13.4	0.0	26.0	2.4	0.0	0.0	0.0	0.0	0.0	0.0	0.0	2775.4	1164.8	0.0	145.3	19.9	189.1	0.0
			12581	4405	380	540	48	17037	857	1086	651	1475	23111	8241	3424	3242	4002	2610	0	430	4510	18001	1650
frac NO3- left in su	0.904	1	0.925	0.878	0.9989	0.9988	1	0.92241	0.9896	0.9896	1	0.999048	0.6517	0.5548	0.9779	0.982	0.44823	0.2184	1	0.9231	0.9867	0.9897	0.99577
frac. NO2 to NH3 in su	0.002	0	0.002	0.003	3E-05	3E-05	0	0.00194	0.00025	0.00025	0	2.29E-05	0.0102	0.014	0.0005	0.0004	0.01907	0.0359	0	0.0019	0.0003	0.0002	0.0001
frac NO3- left in sl	0.965	1	0.947	0.903	0.9991	0.9989	1	0.9277	0.95117	0.94532	0.0045	0.109468	0.0271	1E-08	0.9855	0.9862	1.5E-10	1E-13	1	0.8836	0.9889	0.9921	0.99637
frac. NO2 to NH3 in sl	9E-04	0	0.001	0.002	2E-05	3E-05	0	0.0018	0.0012	0.00135	0.12165	0.051706	0.0829	0.3565	0.0003	0.0003	0.41876	0.5103	0	0.003	0.0003	0.0002	8.7E-05
0.05	mol NO2/mol NO3/Ci/yr.																						
2.49	gal TBP lost per ton fuel																						
1.20E-03	mol NH3/mol NO2/Ci/yr.																						
su ionic strength	4.451	1.762	4.055	6.138	5.2509	4.3755	4.629	3.29621	2.73121	2.72936	1.8935	6.146414	5.1564	6.9381	6.9819	6.8541	6.79521	6.8578	0.27	6.9855	6.8976	6.8419	6.7763
complexability	0.923	0.928	0.373	0.374	0.3596	0.2547	0.105	0.59363	0.46108	0.4611	0.28641	0.318165	0.0282	0.0393	0.0219	0.0216	0.05276	0.169	0	0.2578	0.0217	0.0216	0.01055

	OWW1	OWW2	OWW3	Z	HS	TH1	TH2	AR	B	BL	SRR	CSR in	CSR	DE	CEM	NIT	Salt Slurry	DW	N
B																		24	
B'																			
BY	382	43	4,771		583	304	634	21	470	570			6649					575	325
BY'																			
AI	79	181	55	18	38	4		777	751	608	713		556					125	65
AI'																			
T1																			
T1'																			
R	1		56		1	1	2		2	21			111					6	
R'																			
T2	320	938	900	1,637	47	100	27	429	403	2389	806		6,038					4598	355
T2'																			
S1	233	380	676	164	107	61	18	710	337	2574	828		8345					2,634	1,444
S1'																			
S2	16	37	16		5	3	1	167	127	134	143		146					33	14
S2'																			
A2																			
A2'																			
CSR in	3098.5	7972.4	552.4	0.0	3.4	11.3	0.4	4100.5	5390.6	582.4	70.1	0.0	888.4	0.0	0.0	0.0	0.0	763.3	0.2
AR in	464.6	1692.2	153.5	0.0	0.0	0.0	0.0	157.9	4785.2	1.2	42.0	0.0	58.0	0.0	0.0	0.0	0.0	96.0	0.0
	1031	1579	6474	1819	781	473	682	2104	2090	6296	2490	0	21845	0	0	0	0	7995	2203
frac NO3- left in su	1	1	1	1	0.92989	0.9995	0.3403	0.6302	0.5549	0.9507	0.8212	1	0.8381	1	1	1	1	1	1
frac. NO2 to NH3 in su	0	0	0	0	0.00174	1E-05	0.0255	0.011	0.014	0.0012	0.0047	0	0.0042	0	0	0	0	0	0
frac NO3- left in sl	1	1	1	1	1.8E-17	0.9995	4E-07	2E-08	6E-23	0.0009	9E-06	1	0.8927	1	1	1	1	1	1
frac. NO2 to NH3 in sl	0	0	0	0	0.60361	1E-05	0.296	0.3499	0.7066	0.1546	0.2438	0	0.0027	0	0	0	0	0	0
0.05																			
2.49																			
1.20E-03																			
su ionic strength	0.98556	1.27621	1.3986	7.0082	1.76161	2.022	2.1248	6.8581	6.7857	7.0002	7.1332	0	7.1099	0	0	0.5519	3.3104	0.5127	1.074
complexability	0.27619	0.41829	0.3182	0.1996	0.9844	0.2458	0.2522	0.2746	0.045	0.5643	2.1571	0	0.4675	0	0	0	0.6738	0.006	0.3062

	B in	B-SltCk	T1 in	T1-SltCk	R in	RSltCk	T2 in	T2-SltCk	BY in	BY-SltCk	S1 in	S1-SltCk	S2 in	S2-SltSlr	A1 in	A1-SltCk	A2 in	A2-SltSlr	P3	PL2	CWZr2	BP/Cplx	BP/NCplx
B																							
B'		4,445																					
BY		637		15		13																	
BY'										8,124													
A1		48		20				850		2,180		1353											
A1'																4,668							
T1																							
T1'				6,675																			
R		1		6		24																	
R'						7,706																	
T2		56		2,123		239																	
T2'								10,828															
S1		152		514		597		4,110		56													
S1'												11,364											
S2		11		10				1407		377		3,673											
S2'														3,562									
A2																							
A2'																		0					
CSR in	0.0	125.1	0.0	335.9	0.0	2441.7	0.0	0.0	0.0	39.4	0.0	0.0	0.0	0.0	0.0	0.0	0.0	0.0	0.0	0.0	0.0	0.0	0.0
AR in	0.0	18.4	0.0	0.0	0.0	0.0	0.0	0.0	0.0	0.0	0.0	0.0	0.0	0.0	0.0	0.0	0.0	0.0	0.0	0.0	0.0	0.0	0.0
	0	5350	0	9363	0	8579	0	17195	0	10737	0	16390	0	3562	0	4668	0	0	0	0	0	0	0
frac NO3- left in su	1	1	1	1	1	1	1	1	1	1	1	1	1	1	1	1	1	1	0.2832	0.9739	0.998	1	1
frac. NO2 to NH3 in su	0	0	0	0	0	0	0	0	0	0	0	0	0	0	0	0	0	0	0.0298	0.0006	5E-05	0	0
frac NO3- left in sl	1	1	1	1	1	1	1	1	1	1	1	1	1	1	1	1	1	1	1E-13	0.9768	0.9983	1	1
frac. NO2 to NH3 in sl	0	0	0	0	0	0	0	0	0	0	0	0	0	0	0	0	0	0	0.5087	0.0006	4E-05	0	0
0.05																							
2.49																							
1.20E-03																							
su ionic strength	0	5.3805	0	5.768	0	7.2218	0	6.8675	0	7.4358	0	6.8772	0	7.353	0	7.5363	0	0	7.0292	2.8468	6.7708	0	0
complexability	0	0.6755	0	0.6826	0	0.0691	0	1.2641	0	0.9796	0	1.5005	0	2.336	0	1.8525	0	0	0.1449	0.258	0.009	0	0

	PASF
B	
B'	
BY	
BY'	
A1	
A1'	
T1	
T1'	
R	
R'	
T2	
T2'	
S1	
S1'	
S2	
S2'	
A2	
A2'	
CSR in	0.0
AR in	0.0
	0
frac NO3- left in su	1
frac. NO2 to NH3 in su	0
frac NO3- left in sl	1
frac. NO2 to NH3 in sl	0
0.05	
2.49	
1.20E-03	
su ionic strength	0.3158
complexability	0.0005

APPENDIX F

INSPECTION FORMS

API STANDARD 653: EXTERNAL INSPECTION FORM

Company: Perma-Fix Northwest Richland, Inc. **Location:** Richland, Washington
Tank Inspected: T-310 **Date of Inspection:** April 5, 2011
Time Inspection Began: _____ **Time Inspection Ended:** _____
Inspected By: (Print) Robert Schreiber, Jr., P.E., Q.E.P. **Inspector's Title:** President
Inspector's Company: Schreiber Yonley & Associates
Inspector's Signature: [signature] **Inspector's Initials:** [illegible]

External Inspection Checklist

Item	Completed Yes / No	Yes = ✓ Comments
C.1.1 FOUNDATION		
Measure foundation levelness and bottom elevations (see Appendix B of API 653 for extent of measurements).		
C.1.1.1 Concrete Foundation		
a. Inspect for broken concrete, spalling, and cracks.	Y ✓	METAL
b. Inspect for indications of tank bottom leakage.	Y ✓	DRY
c. Check that runoff rainwater drains away from tank.	Y ✓	INSIDE
d. Check for settlement around perimeter of tank.	Y ✓	NONE
C.1.1.2 Site Drainage		
a. Check site for drainage away from the tank and associated piping and manifolds.	Y ✓	OK
b. Check operating condition of the dike drains, sumps, and removal systems.	Y ✓	OK

External Inspection Checklist (continued)

Item	Completed Y	Comments
3.1.1.3 Housekeeping		
Inspect the area for buildup of trash, vegetation, unnecessary equipment, and other material buildup.	Y ✓	OK
C.1.2 SHELLS		
C.1.2.1 External Visual Inspection		
a. Visually inspect for paint failures, pitting, and corrosion.	Y ✓	NO PAINT
b. Clean off the bottom angle area and inspect for corrosion and thinning of plate and weld.	Y ✓	NONE
c. Visually inspect shell for plate issues such as dents, deformation and damage	Y ✓	NONE
d. Visually inspect shell welds and plate alignment	Y ✓	OK
e. Inspect anchoring system for corrosion, damage or missing	Y ✓	OK
C.1.3 SHELL APPURTENANCES		
C.1.3.1 Manways and Nozzles		
a. Inspect for cracks or signs of leakage on weld joint at nozzles, manways, and reinforcing plates.	Y ✓	
b. Inspect for shell plate dimpling around nozzles, caused by excessive pipe deflection.	Y ✓	
c. Inspect for flange leaks and leaks around bolting.	Y ✓	
d. Check for inadequate manway flange and cover thickness on mixer manways.	Y ✓	

External Inspection Checklist (continued)

Item	Completed Y	Comments
C.1.3.2 Tank Piping Manifolds		
a. Inspect manifold piping, flanges, and valves for leaks.	Y	
b. Inspect fire fighting system components.	Y	BOILER
c. Check for anchored piping which would be hazardous to the tank shell or bottom connections during earth movement.	Y	
d. Check for adequate thermal pressure relief of piping to the tank.	Y	
e. Check sample connections for leaks and for proper valve operation.	Y	
f. Check for damage and test the accuracy of temperature indicators.	Y	NONE
C.1.3.3 Level Indication System		
a. Inspect level indicators for leaks.	Y	FLOAT
b. Inspect level indicators for damage and proper installation.		
c. Compare actual product level to the reading on the level indicator (maximum variation is 2 inches).		
C.1.3.4 Mixer	N/A	
a. Inspect for proper mounting flange and support.		
b. Inspect for leakage.		
c. Inspect condition of power lines and connections to mixer.		

External Inspection Checklist (continued)

Item	Completed Y	Comments
C.1.4 ROOFS	N/A	IN BUILDING
C.1.4.1 Deck Plate Internal Corrosion		
For safety, before accessing the roof, check with ultrasonic instrument or lightly use a ball peen hammer to test the deck plate near the edge of the roof for thinning. (Corrosion normally attacks the deck plate at the edge of a fixed roof and at the rafters in the center of the roof first.)		
C.1.4.2 Deck Plate External Corrosion	N/A	
Visually inspect for paint failure, holes, pitting, and corrosion product on the roof deck.		
C.1.4.3 Roof Deck Drainage	N/A	
Look for indication of standing water. (Significant sagging of fixed roof deck indicates potential failure.)		
C.1.5 ROOF APPURTENANCES	N/A	
C.1.5.1 Sample and Observation Hatch	N/A	
a. Inspect condition and functioning of hatch cover.		
b. Check for reinforcing pad where hatch pipe penetrates the roof deck.		
C.1.5.2 Fixed Roof Scaffold Support	N/A	
Inspect scaffold support for corrosion, wear, and structural soundness.		
C.1.5.3 Vacuum Breakers, Flame Arrestors and Instrumentation	N/A	

External Inspection Checklist (continued)

Item	Completed Y	Comments
a. Report size, number, and type of conservation vents. Inspect vent units. Are the settings accurate for the tank specification?		
b. Report size, number, and type of emergency vents. Inspect emergency vents. Are the settings accurate for the tank specification?		
c. Report the type of flame/detonation arrestor used.		
d. Inspect all pressure/vacuum, pressure relief, flame/detonation arrestors and other instrumentation for proper maintenance, calibration and operation.		
C.1.6 ACCESSWAYS		
C.1.6.1 Handrails	N/A	
a. Identify and report type (steel pipe, galvanized pipe, square tube, angle) and size of handrails.		
b. Inspect for pitting and holes, paint failure.		
c. Inspect attachment welds.		
d. Identify cold joints and sharp edges. Inspect the handrails and mid-rails.		
e. Inspect safety drop bar (or safety chain) for corrosion, functioning, and length.		
f. Inspect the handrail for proper handrails, mid-rails and toe boards.		
C.1.6.2 Platform Frame	N/A	
a. Inspect frame for corrosion and paint failure.		
b. Inspect the attachment of frame to supports and supports to tank for corrosion and weld failure.		

External Inspection Checklist (continued)

Item	Completed Y	Comments
c. Check reinforcing pads where supports are attached to shell or roof.		
d. Inspect the surface that deck plate or grating rests on for thinning and holes.		
e. Check that flat-surface-to-flat-surface junctures are seal-welded.		
C.1.6.3 Deck Plate and Grating	N/A	
a. Inspect deck plate for corrosion-caused thinning or holes (not drain holes) and paint failure.		
b. Inspect plate-to-frame weld for rust scale buildup.		
c. Inspect grating for corrosion-caused thinning of bars and failure of welds.		
d. Check grating tie down clips. Where grating has been retrofitted to replace plate, measure the rise of the step below and above the grating surface and compare with other risers on the stairway.		
C.1.6.4 Stairway Stringers	N/A	
a. Inspect spiral stairway stringers for corrosion, paint failure, and weld failure. Inspect attachment of stairway treads to stringer.		
b. Inspect steel support attachment to concrete base for corrosion.		
c. Inspect steel support attachment to concrete base for corrosion.		
C.1.6.5 Cage Ladder	N/A	
a. Inspect ladder stringers for corrosion.		
b. Identify and inspect ladder fixed rungs (square bar, round bar, angles) for weld attachment to stringers and		

External Inspection Checklist (continued)

Item	Completed Y	Comments
corrosion, particularly where angle rungs are welded to stringers.		
c. Check for wear and corrosion where ladder attaches to platform, tank or supports.		
d. Inspect for wear and secureness.		

External Inspection Checklist (continued)

Item	Completed Y	Comments
C.1.7 GROUNDING SYSTEM	Complete	
Check all process and tank systems for proper grounding continuity. (List below with resistivity reading), or include a drawing with location and readings.)		

Unit From / To	Reading

External Inspection Checklist (continued)

Item	Completed Y	Comments

Notes:

Provide any thickness testing and locations here.

TO BE COMPLETED BEFORE PUT INTO USE

API STANDARD 570: EXTERNAL IN-SERVICE INSPECTION FORM

Company: Perma-Fix Northwest Richland, Inc.
Location: Richland, Washington
Tank Inspected: T-310
Date of Inspection: April 5, 2011
Time Inspection Began:
Time Inspection Ended:
Inspected By: (Print) Robert Schreiber, Jr., P.E., Q.E.P.
Inspector's Title: President
Inspector's Company: Schreiber, Yonley & Associates
Inspector's Signature:
Inspector's Initials: RJS

Inspection Checklist

Item	Completed Y	Comments
1. Leaks		
1.a. Evidence of material leaks from piping or ancillary equipment.	✓	NO LEAKS
1.b. Condition of and materials of construction for piping system gaskets and sealants.	✓	GOOD
1.c. Use of fully threaded nuts and bolts on piping system connectors.	✓	
1.d. Condition of steam tracing and insulation.		
1.e. Capped or double valved discharge points present.	✓	CAPS NEEDED
1.f. Signs of corrosion and condition of paint/coatings on piping, ancillary equipment, bolts and nuts.	✓	OK
2. Misalignment		
2.a. Evidence of misaligned piping.	✓	

Item	Completed Y	Comments
2.b. Adequate thermal expansion available.		
2.c. Expansion joint misalignment and proper installation.		
2.d. Signs of equipment and piping foundation settling.	✓	OK
3. Vibration		
3.a. Presence of excessive overhung weight.	✓	NO
3.b. Inadequate support.	✓	OK
3.c. Presence and condition of thin, small bore, or alloy piping.		
3.d. Evidence of flexing at threaded connections	✓	none
3.e. Presence of loose supports causing metal wear.	✓	OK
3.f. Noticeable vibration during startup, shutdown or continuous operation.		NOT IN OPERATION
3.g. Signs of concrete foundation cracking, chipping and deterioration.	✓	METAL FLOOR
4. Supports		
4.a. Shoes or piping off supports.	✓	OK
4.b. Signs of sagging, deformed or bowed piping	✓	NONE

Item	Completed Y	Comments
4.c. Support damage, breakage or distortion.	✓	OK
4.d. Hanger damage, breakage or distortion.	✓	OK
4.e. Presence of loose brackets	✓	OK
4.f. Counter balance condition		
4.g. Sign of corrosion and condition of paint/coatings on brackets, hangers and supports	✓	OK
5. Corrosion		
5.a. Evidence of metal to water or soil contact.	✓	CONTAINED
5.b. Overall coating and painting condition and type for compatibility with area, equipment and materials.	✓	
5.c. Presence of connected dissimilar metal components that can cause excessive corrosion potential.		
6. Grounding		
6.a. Presence of proper grounding cables and connectors.		
6.b. Condition of grounding connectors and cables.		
6.c. Proper grounding test records for piping systems and ancillary equipment.		

APPENDIX G

PHOTO LOG

1. Tank-310

2. Tank-310 Connection at 90° Position

3. **Tank-310 Manway**

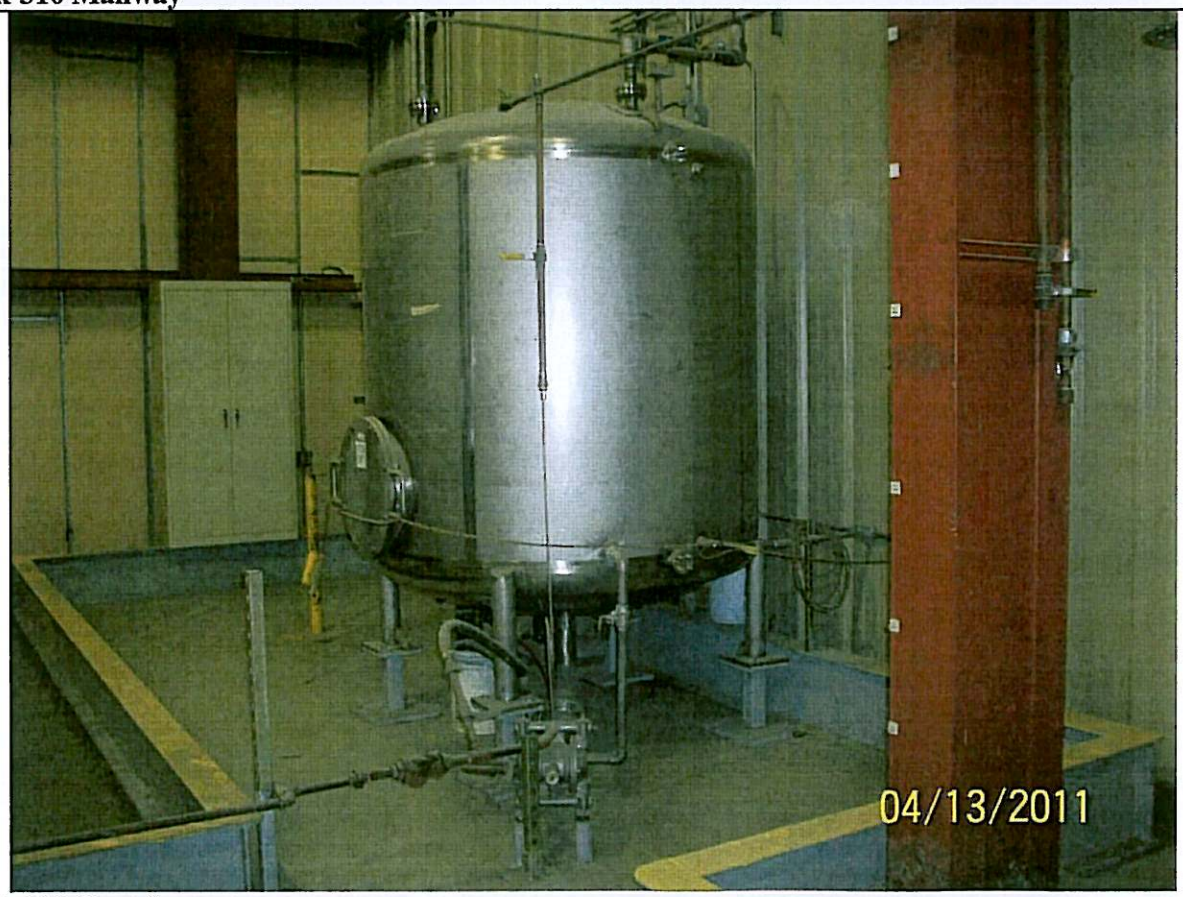

4. **Tank-310 Containment**

5. Tank-310 Overflow Flange and Seal Pot

APPENDIX H

PREVIOUS CONCRETE FOUNDATION ASSESSMENT AND CERTIFICATION

ATG INC.

CALCULATION COVER SHEET

CALC. NO. D-26-002
No. of Sheets: 10

PROJECT ATG - MIXED WASTE FACILITY

PURPOSE
BUILDING FOOTING DESIGN FOR STABILIZATION (ANNEX) BUILDING (STB) AND GASVIT BUILDING (GVB)

SOURCES OF DATA
STRUCTURAL CALCULATIONS AND ITS ADDENDUM PROVIDED BY DIVERSIFIED DEVELOPMENT SERVICES COMPANY (ALL WEST INC.)

SOURCES OF FORMULAE & REFERENCES

—

ATTACHMENT

—

CONCLUSION
FOOTING SIZE AND ARRANGEMENT INCORPORATED IN STRUCTURAL DWG 31001-S-002 SHTS 203, 204 REV. 0

PRELIMINARY CALC. ☐ **FINAL CALC.** ☒ **SUPERSEDES CALC. NO.** _____

REV. NO.	REVISION	BY:	DATE	CHECKED	DATE	APPROVED	DATE
0	ORIGINAL FINAL ISSUE	ALL WEST INC.	1996	[illegible]	2/10/98	[illegible]	2/10/97

13-21-002 1/10 ~~+ ATTACHMENT 1 (2 SHTS)~~

STRUCTURAL CALCULATIONS
RIGID FRAME FOOTING/FOUNDATION SYSTEM
(Building Equipment Foundation for the Annex Building)

FOR
ALLIED TECHNOLOGIES GROUP -ALL WEST CONSTRUCTION INCORPORATED
PROJECT LOCATION - RICHLAND, WASHINGTON

DESIGN CRITERIA:

WIND REGION 70 MPH. EXPOSURE C.
SEISMIC ZONE 2B, I = 1.0
CONCRETE - fc = 2500 PSI
REINFORCING STEEL - 20,000/40,000 PSI
SOIL BEARING PRESSURE 1,000 PSF (ASSUMED)

WILLIAM F. BOEHM
STATE OF WASHINGTON
28971
REGISTERED
PROFESSIONAL ENGINEER
EXPIRES 05/09/97

Job #9473_02 Annex Building
Prepared by Diversified Development Services Company
1425A West Bruneau Place
Kennewick, Washington 99336
(509) 735-4473 Fax (509) 783-4245

DIVERSIFIED DEVELOPMENT SERVICES COMPANY
2625 A WEST BRUNEAU PL. KENNEWICK WA 99336
PHONE. (509) 735-4478 FAX: (509) 783-4245
Land Planning Civil Engineering Financial Packaging Construction Mgmt

PROJECT NAME MTG - ANNEX BUILDING
PROJECT NO 9673-02 SHEET NO 1 OF MULT.
CALCULATED BY R. JACKSON DATE 1996/AUG/1
CHECKED BY W.F.B. DATE 1996/AUG/1
SCALE N/A

FOOTING (F1) @ GRIDLINES (3) & (I) & (7) & (I)

NOTE: COMBINED UPLIFT FORCE @ GRIDLINE CO-ORDINATES (3) & (I) = 1.2K TOTAL
" " " " " (7) & (I) = 7.9K TOTAL

◆ FOOTINGS ARE DESIGNED AT THESE LOCATIONS BASED UPON MOST RESTRICTIVE = 7.9K UP
TOTAL AXIAL ↓ DN. = 8.1K

$\frac{8.1K}{1.0K}\sqrt{8.1 FT^2} = 2.85 FT.$ ← 20.31 CU/FT (@ 30" DEPTH)

CHECK UPLIFT (FTG. ONLY - NEGATE WALL, EARTH @ SLAB) NET ↑ = 7.9K ~ D/LD FTG. = (150)(20.31) = 3.0K N.G.

ADJUST FTG. ~ 4.66 FT² = (150)(54.28) = 8.14K > 7.9K OK
USE FOOTING 4'-8" x 4'-8" x 2'-6" W/ (8) #5 EA. WAY BOTTOM, W/ (4) #5 L (CORNERS), (1) #5 L INTERMEDIATE ~ (3) #3 □ TIES TOP 5' @ -1" FROM T.O. FTG., BALANCE @ 8" O.C. VERT. ←

FOOTING (F2) @ GRIDLINES (3.9) & (I) & (5.9) & (I)
NET UPLIFT FORCE = 14.1K UP
TOTAL AXIAL ↓ DN. = 23.6K

$\frac{23.6K}{1.0K}\sqrt{23.6 FT^2} = 4.85 FT$ ← 59.0 CU/FT IS INSUFFICIENT FOR UPLIFT.

ADJUST FTG ~ 6.5 FT² = (150)(105.6) = 15.8K > 14.1K OK
USE FOOTING - 6'-6" x 6'-6" x 2'-6" W/ (12) #5 EA. WAY BOTTOM, W/ (4) #5 L (CORNERS), (3) #5 L INTERMEDIATE ~ (3) #3 □ TIES TOP 5' @ -1" FROM T.O. FTG., BALANCE @ 8" O.C. VERTICAL ←

FOOTING (F3) @ GRIDLINES (3) & (J), (K) & (L) & GRIDLINES (7) & (J), (K) & (L)

NET UPLIFT FORCE = 31.1K UP
TOTAL AXIAL ↓ DN. = 44.3K

$\frac{44.3K}{1.0K}\sqrt{44.3 FT^2} = 6.65 FT$ ← 110.75 CU/FT IS INSUFFICIENT FOR UPLIFT

ADJUST FTG. ~ 9.5 FT² = (150)(225.6) = 33.8K > 31.1K OK
USE FOOTING 9'-6" x 9'-6" x 2'-6" W/ (12) #5 EA. WAY BOTTOM, W/ (4) #5 L (CORNERS), (4) #5 L INTERMEDIATE ~ (3) #3 □ TIES TOP 5' @ -1" FROM T.O. FTG., BALANCE @ 8" O.C. VERTICAL ←

END PG. 1

2625 A WEST BRUNEAU PL. KENNEWICK, WA 99336
PHONE. (509) 735-4478 FAX: (509) 783-4245
Land Planning Civil Engineering Financial Packaging Construction Mgmt

PROJECT NO — SHEET NO 2 OF MULT
CALCULATED BY — DATE —
CHECKED BY — DATE —
SCALE —

FOOTING (F4) @ GRIDLINES (3) & (7) @ GRIDLINE (M)
NET UPLIFT FORCE = .9K UP
TOTAL AXIAL + DN. = 6.5K

$\frac{6.5K}{1.0K}\sqrt{6.5FT^2} = 2.6FT$ ← 16.25 CU/FT (@ 30" DEPTH)

CHECK UPLIFT = (150)(16.25) = 2.44K > .9K OK NET + = .9K ~ D/LD. FTG. = 2.44K
2.44K > .9K ← OK

USE FOOTING 6'-6" x 6'-6" x 2'-6" ~ SAME AS FOOTING AS (F2)
USE FOOTING (F2) @ (F4) LOCATIONS ←

FOOTING (F5) @ GRIDLINES (M) & (4.1) & (5.1)
COMBINED UPLIFT FORCE @ ALL LOCATIONS = 8.0K TOTAL
TOTAL AXIAL + DN. = 15.1K

$\frac{15.1K}{1.0K}\sqrt{15.1FT^2} = 3.9FT$ ← 37.75 CU/FT (@ 30" DEPTH)
(INSUFFICIENT FOR UPLIFT)

CHECK UPLIFT (FTG. ONLY - NEGATE, WAVE, EARTH & SWAB) NET + = 15.1K ~ D/LD. FOOTING
= (150)(38.0) = 5.7K N.G.

ADJUST FOOTING ~ 4.0' = (150)(40) = 6.0K > 5.7K OK
USE FOOTING 4'-0" x 4'-0" x 12-0" W/(7) #5 EA. WAY BOTTOM, (4) #5 L (CORNERS), (1) #5 L INTERMEDIATE ~ (3) #3 □ TIES TOP 5" @ -1" FROM T.O. FTG., BALANCE @ 8" O.C. VERTICAL ←

FOOTING (F6) @ GRIDLINE (4.9) & (M)
NET UPLIFT FORCE = 6.3K UP
TOTAL AXIAL + DN. = 4.1K

$\frac{4.1K}{1.0K}\sqrt{4.1FT^2} = 2.0FT$ ← 10.25 CU/FT (@ 30" DEPTH)
(INSUFFICIENT FOR UPLIFT)

ADJUST FOOTING ~ 4.25' = (150)(45.15) = 6.7K > 6.3K OK
USE FOOTING 4'-3" x 4'-3" x 2'-6" W/(7) #5 EA. WAY BOTTOM, (4) #5 L (CORNERS), (2) #5 L INTERMEDIATE - (3) #3 □ TIES TOP 5" @ -1" FROM T.O. FTG., BALANCE @ 8" O.C. VERTICAL ←

END PG. 2

DIVERSIFIED DEVELOPMENT SERVICES COMPANY
2625 A WEST BRUNEAU PL. KENNEWICK, WA 99336
PHONE: (509) 735-4478 FAX: (509) 783-4245
Land Planning Civil Engineering Financial Packaging Construction Mgmt

PROJECT NAME
PROJECT NO. — SHEET NO. 3 OF MULT
CALCULATED BY — DATE —
CHECKED BY — DATE —
SCALE —

FOOTING (F6A) @ GRIDLINES (2) & (3) & (4) @ GRIDLINE (F)
COMBINED NET UPLIFT FORCE (WORST CASE) = 10.5K UP
TOTAL AXIAL + DN. = 17.0K

$\frac{17.0K}{1.0K}\sqrt{17.0FT^2} = 4.1FT$ ← 41.5 SQ/FT (@ 30" DEPTH)
(INSUFFICIENT FOR UPLIFT)

ADJUST FOOTING ~ 5.5' ~ (150)(75.42) = 11.34K > 10.5K OK
USE FOOTING 5'-6" x 5'-6" x 2'-6" W/ (10) #5 EA. WAY BOTTOM, (4) #5 L (CORNERS), (2) #5 L INTERMEDIATE ~ (3) #3 ⊓ TIES TOP 5" @ 1" FROM T.O. FTG. ~ BALANCE @ 8" O.C. VERTICAL ←

FOOTING (F7) @ GRIDLINE (5) & (F)
NET UPLIFT = 4.8K
TOTAL AXIAL + DN. = 19.9K

$\frac{19.9K}{1.0K}\sqrt{19.9FT^2} = 4.5FT$ ← 50.62 SQ/FT (@ 30" DEPTH)

CHECK UPLIFT ~ (150)(50.62) = 7.6K > 4.8K OK
USE FOOTING 4'-6" x 4'-6" x 2'-6" W/ (8) #5 EA. WAY BOTTOM, (4) #5 L (CORNERS), (1) #5 L INTERMEDIATE, (3) #3 ⊓ TIES TOP 5" @ 1" FROM TOP FTG., BALANCE @ 8" O.C. VERTICAL ←

FOOTING (F8) @ GRIDLINE (6) & (F)
NET UPLIFT FORCE + = 10.5K UP
TOTAL AXIAL + DN = 9.9K

DUE TO UPLIFT REQUIREMENT, USE FOOTING AS (F6)

USE FOOTING (F6) @ (F8) LOCATION ← ⬢

FOOTING (F9) @ GRIDLINE (7) & (F)
NET UPLIFT FORCE + = 9.4K
TOTAL AXIAL + DN. = 5.0K

DUE TO UPLIFT REQUIREMENT, USE FOOTING AS (F6)

USE FOOTING (F6) @ (F9) LOCATION ← ⬢

END PG. 3

DIVERSIFIED DEVELOPMENT SERVICES COMPANY
24254 W. BERNEAU PLACE KENNEWICK, WA 99336 (509) 735-4373
Land Planning Civil Engineering Financial Packaging Construction Mgmt

PROJECT NO. — SHEET NO. 4 OF
CALCULATED BY — DATE —
CHECKED BY — DATE —
SCALE —

FOOTING (F10) @ GRIDLINES (1) & (G)

NET UPLIFT FORCE = 14.4K UP
TOTAL AXIAL ↓ DN = 10.7K

$\frac{10.7K}{1.0K}\sqrt{10.1FT^2} = 3.1FT = 25.25$ CU/FT (INSUFFICIENT FOR UPLIFT)

TRY FTG. 6.66' = (150)(110.88) = 16.66K > 14.4K OK
USE FOOTING 5'-0" x 8'-10" x 2'-6" W/ (4) #5 LONG. / (11) #5 TRANSV. BOTTOM, (4) #5 (CORNER) / #5 L @ 24" O.C. LONGIT. SIDES / (2) #5 L ENDS INTERMEDIATE, (3) #3 ⊓ TIES TOP 5" @ -1" FROM T.O. FTG. ←

FOOTING (F11) @ GRIDLINES (7) & (G) & (6) @ (H)

NET UPLIFT FORCE = 18.6K UP
TOTAL AXIAL ↓ DN. = 14.4K

$\frac{18.4K}{1.0K}\sqrt{18.4FT^2} = 4.3FT = 46.0$ CU/FT. (INSUFFICIENT FOR UPLIFT)

USE FOOTING (F10) @ (F11) LOCATIONS (DUE TO UPLIFT REQUIREMENTS) ←

NOTE! @ GRIDLINE (6) @ (H) FOOTING MAY BE 6'-8" x 6'-8" x 2'-6" W/ (8) #5 EA. WAY BOTTOM, W/ BALANCE OF REINFORCING AS THAT OF FOOTING (F3)

FOOTING (F12) @ (5) & (H)

NET UPLIFT FORCE = 5.3K UP
TOTAL AXIAL ↓ DN. = 43.3K

$\frac{43.3K}{1.0K}\sqrt{43.3FT^2} = 6.5FT = 108.25$ CU/FT

CHECK UPLIFT - (150)(108.25) = 16.23K > 5.3K ~ REDUCE DEPTH TO 12" =
~ (150)(42.25) = 6.3K > 5.3K OK
USE FOOTING - 6'-6" x 6'-6" x 12" W/ (12) #5 EA. WAY BOTTOM, (4) #5 L (CORNER) (4) #5 L INTERMEDIATE ~ (3) #3 ⊓ TIES TOP 5" @ -1" FROM T.O. SLAB @ (1) #3 ⊓ @ +3" BOTTOM OF FTG. ←

FOOTING (F13) @ GRIDLINE (3) @ (H)

NET UPLIFT FORCE = 19.8K
TOTAL AXIAL ↓ DN. = 36.3K

$\frac{36.3K}{1.0K}\sqrt{36.3FT^2} = 4.5' = 49.5$ CU/FT (INSUFFICIENT FOR UPLIFT) (@ 30" DEPT

TRY FOOTING 7.33' = (150)(134.3) = 20.14K > 19.8K OK
USE FOOTING 7'-4" x 7'-4" x 2'-6" W/ (9) #5 EA. WAY BOTTOM, (4) #5 L (CORNERS), (4) #5 L INTERMEDIATE, (5) #5 ⊓ TOP 5" @ -1" FROM T.O. FTG., BALANCE @ 6" O.C. VERTICAL. ←

END PG. 4

DIVERSIFIED DEVELOPMENT SERVICES COMPANY
24254 W. BRENNAN PLACE KENNEWICK, WA 99336 (509) 735-4373
Land Planning Civil Engineering Financial Packaging Construction Mgmt

FOOTING (F14) @ GRIDLINES (2) @ (H)

NET UPLIFT FORCE = 13.9K UP
TOTAL AXIAL + DN. = 17.3K

DUE TO UPLIFT FORCES USE FOOTING (F2)

USE FOOTING (F2) @ (F14) LOCATION ←

FOOTING (F15) @ GRIDLINE (7) @ (H)

NET UPLIFT FORCE = 9.2K UP
TOTAL AXIAL + DN. = 10.1K

DUE TO UPLIFT REQUIREMENTS USE FOOTING (F6A)

USE FOOTING (F6A) @ (F15) LOCATION ←

FOOTING (F16) @ GRIDLINE (1) (H)

NET UPLIFT FORCE = .4K UP
TOTAL AXIAL + DN. = 4.0K

$\frac{4.0K}{1.0K}\sqrt{4.0FT^2} = 2.0FT = 10.0CU/FT$

CHECK UPLIFT = (150)(10.0) = 1.5K > .4K OK
USE FOOTING - 2'-0" x 2'-0" x 2'-6" W/ (3) #5 EA. WAY BOTTOM, (4) #5 L (CORNERS) (1) #5 L INTERMEDIATE - (3) #3 □ TIES TOP 5" @ -1" FROM T.O. FTG., BALANCE @ 9" O.C. VERTICAL ←

FOOTING (F17) @ GRIDLINE (D) @ (G)

NET UPLIFT FORCE = 1.4K UP
TOTAL AXIAL + DN. = 4.1K

$\frac{4.1K}{1.0K}\sqrt{4.1FT^2} = 3.0FT = 11.97 CU/FT$ (@ 16" DEPTH)

CHECK UPLIFT = (150)(11.97) = 1.79K > 1.4K OK
USE FOOTING 3'-0" x 3'-0" x 2'-6" W/ (4) #5 EA. WAY BOTTOM, (4) #5 L (CORNERS), (1) #5 L INTERMEDIATE, (3) #3 □ TIES TOP 5" @ -1" FROM T.O. SLAB / (1) #3 □ @ +3" FROM BOTTOM OF FOOTING ←

FOOTING (F18) @ GRIDLINE (1) + (P)

NET UPLIFT FORCE = 7.5K UP / TOTAL AXIAL + DN. = 3.7K $\frac{3.7K}{1.0K}\sqrt{3.7FT^2} = 2.0FT = 10.0 CU/FT$ (@ 30" DEPTH)
CHECK UPLIFT = (150)(10.0) = 1.5K < 7.5K N.G.

ADJUST FTG - 4'-6" = (150)(50.62) = 7.6K > 7.5K OK
USE FTG 4'-6" x 4'-6" x 2'-6" W/ (8) #5 EA. WAY BOTTOM, (4) #5 L (CORNERS), (2) #5 L INTERMEDIATE, (5) #3 □ TIES TOP 5" @ -1" FROM T.O. FTG., BALANCE @ 9" O.C. VERTICAL ←

END PG. 5

DIVERSIFIED DEVELOPMENT SERVICES COMPANY
2425A W. BRUNEAU PLACE KENNEWICK, WA 99336 (509) 735-4373
Land Planning Civil Engineering Financial Packaging Construction Mgmt

PROJECT NO. — SHEET NO. 6 OF MULT
CALCULATED BY — DATE —
CHECKED BY — DATE —
SCALE —

FOOTING (F19) @ GRIDLINE (4.9) & (I)

NET UPLIFT FORCE = 11.7K
TOTAL AXIAL ↓ DN. = 14.9K

$\frac{14.9K}{1.0K}\sqrt{14.9 FT^2} = 3.8' = 37.25$ CU/FT (INSUFFICIENT FOR UPLIFT)

TRY FTG - 6.0' = (150)(90.0) = 13.5K > 11.7K OK

USE FOOTING 6'-0" x 6'-0" x 2'-6" W/ (7) #5 EA. WAY BOTTOM, (4) #5 L (CORNERS), (3) #5 L INTERMEDIATE, (3) #3 □ TIES TOP 5" @ -1" FROM TOSLAB, BALANCE @ 8" O.C. VERTICAL ←

END PG. 6 - END FOOTINGS

PROJECT NAME [illegible] PROJ. NO. 9673.02[illegible] SHEET NO. 1 OF
CALCULATED BY R.J. [illegible] DATE 1996/[illegible]
CHECKED BY WJBB DATE 1996/[illegible]
SCALE

DIVERSIFIED DEVELOPMENT SERVICES COMPANY
24254 SE KENT-KAPPELL PLACE KENT, WA 98031 (206) 735-4373
Land Planning · Civil Engineering · Financial Packaging · Construction Management

WILLIAM B. BOEHNKE — STATE OF WASHINGTON — 28971 — REGISTERED PROFESSIONAL ENGINEER — EXPIRES 05/09/97

DESIGN CRITERIA

$f'_c = 2{,}500$ PSI $f_y = 1{,}125$ PSI $n = 10$

$f_s = 20{,}000$ [DESIGN] V_c = WHICH 60 PSI / PERIPHERAL SHEAR = 110 PSI

$\rho = .0101$ $k = .362$

$j = .879$ $R = 179$ U - WHICH $\phi = .340$ / $\phi = .277$

F20 [F21 APPLYS THOUGH VERTICAL LOAD IS 19.0K]

FTG WT = 12.58K (12,500 LB) + TOTAL UP TO FNDN. PRES = 29.58K

TOTAL AXIAL + DN. = 17.0K TOTAL = 29.58K ↓

$\frac{29.58^K}{1.00K} \sqrt{29.58 \text{ FT}^2} = 29.58 \text{ FT}^2$ NET ↑ ON FOUNDATION REQ (DUE TO BENDING)

$= 29.58^K - 12.58^K = 17.0^K$, $\frac{17.0K}{29.58} = 574$ PSF < 1000 OK ←

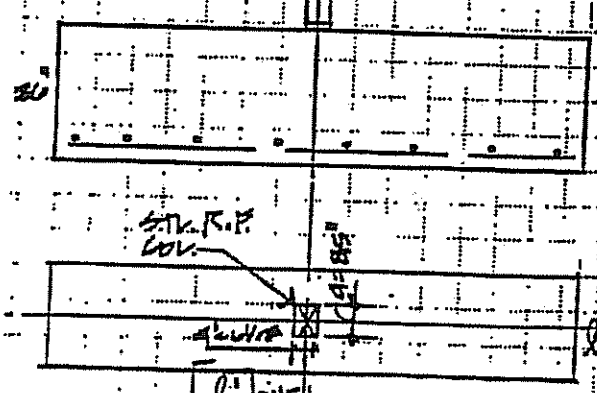

$L = \frac{l - a}{2} = \frac{1.33' - .708'}{2} = .819'$

$M = (L)(574)(1.33)(.819') = 5{,}882.5$ IN/LB

$M = 5{,}882.5$ IN/LB MAX. BENDING MOMENT

EFFECTIVE DEPTH:

$d = \sqrt{\frac{5882.5}{(179)(36)}} = 1.03$ IN ←

– REVERSE DIRECTION OF MOMENT –

$L = \frac{l' - a'}{2} = \frac{11.5' - .5H'}{2} = 5.5'$

$M = (L)(574)(11.5)(5.5^2) = 1{,}198{,}900.0$ IN/LBS

$M = 1{,}198{,}900.0$ IN/LBS MAX. BENDING MOMENT

EFFECTIVE DEPTH:

$d = \sqrt{\frac{1{,}198{,}900.0}{(179)(138)}} = 6.9667$ IN ←

INVESTIGATE SHEAR

$L = 5.45'$ $L - d = 5.45' - 1.73' = 1.73'$ (1.33)

$= 6.33$ FT² $V = (6.33)(574) = 3{,}634$ LB

$v = \frac{3634}{(138)(36)} = .73$ PSI < 60 PSI OK

$A_s = \frac{1{,}198{,}900}{(20{,}000)(.879)(36)} = A_s = 1.89$ IN²/FT.

= (6) #5 (.31 IN²/BAR) ~ (5) #5 PROVIDED

ADDITIONAL REINF. WAS ADDED @ #5 = 3½" O.C. TRANSVERSE ~ OK ←

SUMMARY:
FOOTING F20 & F21 CONTAIN SUFFICIENT REINFORCING AS DENOTED IN THE FOOTING SCHEDULE UNDER APPENDIX. NO FURTHER INVESTIGATION IS WARRANTED.
[NOTE: ACTUAL $f_c = 60{,}000$]

SHT. 9/10

Land Planning
Civil & Site Engineering
Structural Engineering
Financial Pro formas
Architectural Renderings
Comp. Development Design
Total Development Mgm't

RECEIVED
AUG 2 6 1996

1996/August/20

Mr. Lawrence Chiu
Allied Technologies Group
47375 Fremont Blvd.
Fremont, California 94538

Addendum No. 1: Revised End Wall Column Footings for the Annex Building (Reference Drawing No. Exhibit D-1B - Figure 9 and D-1B Figure 10)

Dear Lawrence,

Pursuant to our conversation on the evening of 1996/August/20 regarding possible conflict between Footings at the existing Building No. 13 and the proposed new Annex Building along Gridline 'F', between Gridline's No. 2 through Gridlines No. 6 we are revising the Footing configuration for the new building at the above referenced co-ordinates as follows:

On Drawing Exhibit D-1B, Figure 9;

*a.) Revise Footing F6A and F8 (@ Gridline 'F' and Gridline's 2, 3, 4 and 6) from 5'-6" x 5'- 6" x 2'-6" to 11'-6" x 2'-4" x 3'-0" (Depth increased to 3'-0"). **This Footing will now bear the new Mk. No. of F20 on the revised drawings and calculations forthcoming.***

*b.) Revise Footing F7 (@ Gridline 'F' and Gridline 5) from 4'-6" x 4'-6" x 2'-6" to- 7'-6" x 2'- 3" x 3'-0" (Depth increased to 3'-0"). **This Footing will now bear the new Mk. No. of F21 on the revised drawings and calculations forthcoming.***

On Drawing Exhibit D-1B, Figure 10;

c.) Revise Detail No. 5, dimension indicated from 'Grid' to Face of Concrete on the new Annex Building Monolithic Footing from "1'-0"" to "2'-11-1/2"". This revision will be effected in the revised drawings forthcoming.

d.) Revise Detail No. 2, dimension indicated from Top of Footing to Bottom of Footing from "2'-6"" to "Varies from 2'-6" to 3'-0" at some locations".

DIVERSIFIED DEVELOPMENT SERVICES COMPANY
2625 A WEST BRUNEAU PLACE
KENNEWICK, WA 99336
(509) 735-4373 (509) 783-4245 FAX

D-21-002 SHT. 10/10

Since all the Footing revisions noted above result in new rectangular Footings with a beam configuration, reinforcing will need to be recalculated to satisfy flexural forces. Due to time constraints, these calculations will have to follow. You may anticipate receiving them by Fax no later than Friday, the 23th of August. Drawings reflecting these revisions will be sent to you by Federal Express on Friday as well.

Very Truly yours,

FREDERICK C. JACKSON

Frederick C. Jackson

ATG INC.

CALCULATION COVER SHEET

CALC. NO. D-2i-040

No. of Sheets: 6

PROJECT ATG - MIXED WASTE FACILITY.

PURPOSE

DESIGN OF CONCRETE SLAB ON COMPACTED SUBGRADE FOR STB, GVB, WSB, ACB

SOURCES OF DATA

SOURCES OF FORMULAE & REFERENCES

ATTACHMENT

CONCLUSION

ALL SITE REINFORCEMENT HAVE BEEN INCORPORATED IN DWGS.

PRELIMINARY CALC. ☐ FINAL CALC. ☒ SUPERSEDES CALC. NO. _____

REV. NO.	REVISION	BY:	DATE	CHECKED	DATE	APPROVED	DATE
0	ORIGINAL ISSUE	K. LIU	2/13/98	[illegible]	2/13/98	[illegible]	2/14/98

D-2i-040

ATG CALCULATION SHEET

SHEET NO 3 OF 6

atg5.wk4 PROJECT NO :

SUBJECT : Concrete Slab on Grade
5" slab on exist slab - STB

MADE BY : K. Liu
CHECKED BY :
DATE : 02/13/98

New 5" Concrete Slab on Existing 6" Slab:

Data : Concrete fc' = 3000 psi @ 28 days Ec = 3122 ksi
fc' = 3300 psi @ 90 days Ec = 3274 ksi
μ = 0.15
Reinforcement fy = 60000 psi
Subgrade : 90 % compaction Ks = 400 pci = 0.400 kci
Slab thickness h = 5 inch
Fork Lift Wheel Load P = 14.5 kips per wheel DL + LL + I

Design :

Concrete rupture Stress fr = 7.5 (fc') ^ 0.5 = 431 psi
Wheel contact Area A = 53 sq. inch
Equivalent radius a = 4.1 inch
Slab Radius of Relative Stiffness r = ((Ec h ^3) / (.12(1 - u ^2)Ks))^0.25
r = 17.19 inch 409250 4.6920

Concrete fiber stress fc = 974 psi > fr 1.9488
Required Reinforcement 0.239
Excess Stress = fc - 0.8 x fr = 630 psi 0.9776
M = Excess stress x b x h^2 / 6 = 31475 inch Lb 0.4889
= 2.623 kip ft/ ft
Mu = 1.7 M = 4.459 kip ft/ ft
d = 2.75 inch
Mu / (phi x fc' x b x d^2)= 0.198525
q = 0.2296
Req'd Reinf = q x fc' / fy = 0.012628 0.0168
As (req'd) = 0.417 sq inch/ ft
Provide # 5 @ 9" O.C. = 0.413 sq. inch / ft EW in one layers

4" MIN. SLAB AT A SMALL FLAT LOW POINT AREA -
GENERAL SLAB THICKNESS ≥ 5".

Allied Technology Group; 47375 Fremont Blvd. Fremont, CA 94538
Tel : 510-490-3008 Fax : 510-490-1032

D-2i-040

ATG CALCULATION SHEET

SHEET NO 2 OF 6

atg2.wk4

PROJECT NO :

SUBJECT : Concrete Slab on Grade
8" slab on grade — WSB

MADE BY : K. Liu

CHECKED BY :

DATE : 02/13/98

New 8" Concrete Slab on compacted subgrade:

Data : Concrete fc' = 3000 psi @ 28 days Ec = 3122 ksi
fc' = 3300 psi @ 90 days Ec = 3274 ksi
u = 0.15

Reinforcement fy = 60000 psi

Subgrade : 90 % compaction Ks = 250 pci = 0.250 kci

Slab thickness h = 8 inch

Fork Lift Wheel Load P = 14.5 kips per wheel DL + LL + I

Design :

Concrete rupture Stress fr = 7.5 (fc') ^ 0.5 = 431 psi

Wheel contact Area A = 53 sq. inch

Equivalent radius a = 4.1 inch

Slab Radius of Relative Stiffness r = ((Ec h ^3) / (12(1 - u ^2)Ks))^0.25

r = 27.50 inch 1676288 2.9325

Concrete fiber stress fc = 454 psi > fr 0.7613

Required Reinforcement 0.1494

Excess Stress = fc - 0.8 x fr = 109 psi 0.9579

M = Excess stress x b x h^2 / 6 = 14003 inch Lb 0.3865

= 1.167 kip ft/ ft

Mu = 1.7 M = 1.984 kip ft/ ft

d = 4.68 inch

Mu / (phi x fc' x b x d^2)= 0.030497

q = 0.03107

Req'd Reinf = q x fc' / fy = 0.00170885 0.0023

As (req'd) = 0.128 sq inch/ ft

Provide # 4 @ 12" O. C. = 0.20 sq. inch / ft EW in two layers

Allied Technology Group: 47375 Fremont Blvd. Fremont, CA 94538
Tel: 510-490-3008 Fax: 510-490-1032

D-2L-040

ATG CALCULATION SHEET

SHEET NO 3 OF 6

atg3.wk4

PROJECT NO :

SUBJECT : Concrete Slab on Grade
6" slab on grade – GVB, STB (ANNEX)
– SLAB ON GRADE

MADE BY : K. Liu

CHECKED BY :

DATE : 02/13/98

New 6" Concrete Slab on compacted subgrade:

Data : Concrete fc' = 3000 psi @ 28 days Ec = 3122 ksi

fc' = 3300 psi @ 90 days Ec = 3274 ksi

u = 0.15

Reinforcement fy = 60000 psi

Subgrade : 90 % compaction Ks = 250 pci = 0.250 kci

Slab thickness h = 6 inch

Fork Lift Wheel Load P = 14.5 kips per wheel DL + LL + I

Design :

Concrete rupture Stress fr = 7.5 (fc') ^ 0.5 = 431 psi

Wheel contact Area A = 53 sq. inch

Equivalent radius a = 4.1 inch

Slab Radius of Relative Stiffness r = ((Ec h^3) / (12(1 - u ^2)Ks))^0.25

r = 22.16 inch 707184 2.9325

Concrete fiber stress fc = 750 psi > fr 1.3533

Required Reinforcement 0.1854

Excess Stress = fc - 0.8 x fr = 405 psi 0.9658

M = Excess stress x b x h^2 / 6 = 29185 inch Lb 0.4305

= 2.432 kip ft/ ft

Mu = 1.7 M = 4.135 kip ft/ ft

d = 2.687 inch

Mu / (phi x fc' x b x d^2)= 0.192813

q = 0.22185

Req'd Reinf = q x fc' / fy = 0.01220175 0.0163

As (req'd) = 0.393 sq inch/ ft

Provide # 5 @ 9" O. C. = 0.41 sq. inch / ft EW in one layers

Allied Technology Group; 47375 Fremont Blvd. Fremont, CA 94538

Tel; 510-490-3008 Fax: 510-490-1032

D-2i-070

ATG CALCULATION SHEET

SHEET NO 4 OF 6

atg4.wk4

PROJECT NO :

SUBJECT : Concrete Slab on Grade
5" slab on grade — ACB

MADE BY : K. Liu

CHECKED BY :

DATE : 02/13/98

New 5" Concrete Slab on compacted subgrade:

Data : Concrete fc' = 3000 psi @ 28 days Ec = 3122 ksi
fc' = 3300 psi @ 90 days Ec = 3274 ksi
u = 0.15

Reinforcement fy = 60000 psi

Subgrade : 90 % compaction Ks = 250 pci = 0.250 kci

Slab thickness h = 5 inch

Fork Lift Wheel Load P = 6 kips per wheel DL + LL + I

No wheel loads

Design :

Concrete rupture Stress fr = 7.5 (fc') ^ 0.5 = 431 psi

Wheel contact Area A = 53 sq. inch

Equivalent radius a = 4.1 inch

Slab Radius of Relative Stiffness r = ((Ec h ^3) / (12(1 - u ^2)Ks))^0.25

r = 19.33 inch 409250 2.9325

Concrete fiber stress fc = 424 psi > fr 0.8064

Required Reinforcement 0.2125

Excess Stress = fc - 0.8 x fr = 79 psi 0.9718

M = Excess stress x b x h^2 / 6 = 3958 inch Lb 0.461

= 0.330 kip ft/ ft

Mu = 1.7 M = 0.561 kip ft/ ft

d = 1.75 inch

Mu / (phi x fc' x b x d^2)= 0.06165

q = 0.06407

Req'd Reinf = q x fc' / fy = 0.00352385 0.0047

As (req'd) = 0.074 sq inch/ ft

Provide # 4 @ 12" O. C. = 0.20 sq. inch / ft EW in one layers

Allied Technology Group; 47375 Fremont Blvd. Fremont, CA 94538
Tel: 510-490-3008 Fax: 510-490-1032

CALCULATION SHEET

10-21-040
SHEET NO 5 OF 6

SUBJECT: Slab on Existing 6" slab

JOB NO.:

MADE BY: K. Liu

DATE: 2/13/13

New 5" Concrete on (E) 6" slab:

$f_c' = 3000$ psi , $f_c' = 3300$ psi @ 90 days $\rightarrow E_c = 3274^{ksi}$

$\mu = 0.15$ for conc poison's ratio

Spring constant of subgrade, normally 150 pci for non-compacted soil. Since the base is a 6" (E) slab, assume $k_s = 400$ pci

Wheel load: Fork Lift (10-kip capacity)

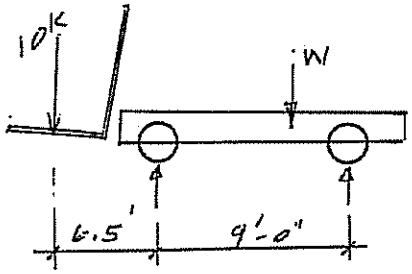

unloaded 14.4^K

Loaded 24.4^K

with Impact $24.4(1+30\%) = 31.72^K$

85% on Drive wheel $= 27^{KIP}$ (2 wheels)

$R_{max} = \frac{27}{2} = 13.5^K$

LL	17.2	-7.2
LL+I	22.4	-9.4
DL	7.2	7.2
	29.6^K	-9.4 ←

LL+I	22.4	-9.4
DL	5.0	+9.4
	27.4^K	0

Wheel Load: H-20 Loads → Single Axle Load

$= 24^K(1+30\%) = 31.2^{KIP}$

$R_{max} = \frac{31.2}{2} = 15.6^{KIP}$/wheel ← Governs

Design for Fork Lift wheel load only

$R_{max} = 13.5^{KIP}$ use $P = 14.5^{KIP}$ for des

CALCULATION SHEET

D-21-040
SHEET NO 6 OF 6

SUBJECT: Slab on Existing 6" Slab

JOB NO.:

MADE BY: K. LIU

DATE: 2/13/98

Concrete Rupture Stress $f_r = 7.5\sqrt{f_c'} = 431$ psi

Wheel contact Area $= 53\ in^2$

Equivalent radius $a = \left(\frac{53}{\pi}\right)^{1/2} = 4.1^{in}$

Slab Radius of Relative Stiffness $r = \left(\frac{E_c h^3}{12(1-\mu^2)k_s}\right)^{1/4}$

Slab thickness $h = 5''$

$$r = \left[\frac{3274000 \times 5^3}{12(1-0.15^2) \times 400}\right]^{1/4} = 17.19^{in} \longrightarrow a/r = 0.23851$$

<u>Concrete fiber stress f_c due to wheel load P.</u>

$$f_c = \frac{3.36P}{h^2}\left[1 - \frac{(a/r)^{1/2}}{0.925 + 0.22\cdot\left(\frac{a}{r}\right)}\right] = \frac{3.36 \times 14.5}{5^2}\left[1 - \frac{(0.23851)^{1/2}}{0.925 + 0.22(0.23851)}\right]$$

$$= 0.975^{ksi} = 975 \text{ psi}$$

Excess fiber stress

$$\Delta f_c = 975 - 0.8 \times f_r = 630 \text{ psi}$$

Excess Moment $= \Delta f_c \times \frac{bh^2}{6} = 630 \times \frac{12 \times 5^2}{6} = 31500^{in\text{-}lb}$

$$M = 2.625^{1K/Ft}$$

$$M_u = 1.7M = 4463^{1\#/Ft}$$

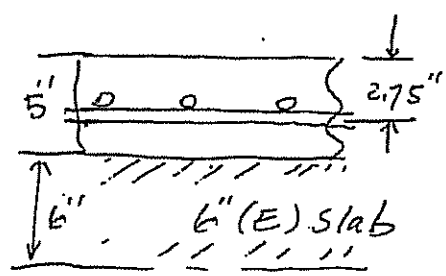

$$\frac{M_u}{\phi f_c' b d^2} = 0.1986 \rightarrow \omega = 0.2298$$

$$\rho_m = \omega \times \frac{f_c'}{f_y} = 0.01264$$

$A_s(\text{req'd}) = \rho b d = 0.417^{in^2}/Ft$ use #5 @ 9" o.c $= 0.413^{in^2}$