US Army Corps
of Engineers
Seattle District

Public Notice of Application for Permit

Regulatory Branch
Post Office Box 3755
Seattle, Washington 98124-3755
Telephone (206) 764-3495
ATTN: Debbie Knaub, Project Manager

Public Notice Date: May 16, 2006
Expiration Date: June 14, 2006
Reference: 200600179
Name: Ruybal, Dominique

Interested parties are hereby notified that an application has been received for a Department of the Army permit in accordance with Section 10 of the Rivers and Harbors Act of 1899, and Section 404 of the Clean Water Act for certain work described below and shown on the enclosed drawings.

APPLICANT: Mr. Dominique Ruybal
16531 – 13th Avenue West, Suite A-107
Lynwood, Washington 98037
Telephone: (425) 210 6367

AGENT: Larry Lehman, Grette Associates
151 South Worthen, Suite 101
Wenatchee, Washington 98801
Telephone: (509) 663 6300

LOCATION: Between 3334 and 3300, South Lakeshore Road, near Chelan, Chelan County, Washington.

WORK: Construct a 384 square foot pier with 10 steel piling anchored in concrete footings; place 9 cubic yards of riprap around piling; install a boat lift; and install woody debris as mitigation.

PURPOSE: To provide recreational lake access and boat moorage.

MITIGATION: Install woody debris structures.

ENDANGERED SPECIES: The Endangered Species Act (ESA) requires federal agencies to consult with the National Marine Fisheries Service (NMFS) and/or U.S. Fish and Wildlife Service (USFWS) pursuant to Section 7 of ESA on all actions that may affect a species listed (or proposed for listing) under the ESA as threatened or endangered or any designated critical habitat. The Columbia River bull trout *(Salvelinus confluentus)*, threatened, and the Bald eagle (*Haliaeetus leucocephalus*), threatened, may occur in the proposed project area.

A preliminary determination indicates that the activity may affect, but is not likely to adversely affect endangered or threatened species, or their critical habitat, designated under the Endangered Species Act of 1973.

ESSENTIAL FISH HABITAT: The Magnuson-Stevens Fishery Conservation and Management Act, as amended by the Sustainable Fisheries Act of 1996, requires all Federal agencies to consult with the NMFS on all actions, or proposed actions, permitted, funded, or undertaken by the agency, that may adversely affect Essential Fish Habitat (EFH). There is no area of EFH in Lake Chelan. The U.S. Army Corps of Engineers (Corps) has determined that the proposed action will not adversely affect designated EFH for federally managed fisheries in Washington waters. No further EFH consultation is necessary.

CULTURAL RESOURCES: The District Engineer has reviewed the latest published version of the National Register of Historic Places, lists of properties determined eligible and other sources of information. There are no recorded historic properties within the permit area. The proposed work is of such a limited nature and extent that little likelihood exists for the project to impinge upon an unrecorded historic property.
The District Engineer invites responses to this public notice from Native American Nations or tribal governments; Federal, State, and local agencies; historical and archeological societies; and other parties likely to have knowledge of or concerns with historic properties in the area. This public notice initiates consultation under Section 106 of the National Historic Preservation Act (36 CFR 800.4[a][3]), with any Tribe that has information or concerns with historic properties in the proposed permit area.

PUBLIC HEARING: Any person may request, in writing, within the comment period specified in this notice, that a public hearing be held to consider this application. Requests for public hearings shall state, with particularity, the reasons for holding a public hearing.

EVALUATION: The decision whether to issue a permit will be based on an evaluation of the probable impacts, including cumulative impacts, of the proposed activity on the public interest. That decision will reflect the national concern for both protection and utilization of important resources. The benefits, which reasonably may be expected to accrue from the proposal, must be balanced against its reasonably foreseeable detriments. All factors which may be relevant to the proposal will be considered, including the cumulative effects thereof; among those are conservation, economics, aesthetics, general environmental concerns, wetlands, historic properties, fish and wildlife values, flood hazards, floodplain values, land use, navigation, shoreline erosion and accretion, recreation, water supply and conservation, water quality, energy needs, safety, food and fiber production, mineral needs, considerations of property ownership, and, in general, the needs and welfare of the people.

The U.S. Army Corps of Engineers is soliciting comments from the public; Native American Nations or tribal governments; Federal, State, and local agencies and officials; and other interested parties in order to consider and evaluate the impacts of this activity. Any comments received will be considered by the Corps to determine whether to issue, modify, condition or deny a permit for the work. To make this decision, comments are used to assess impacts on endangered species, historic properties, water quality, general environmental effects, and the other public interest factors listed above. Comments are used in the preparation of an Environmental Assessment and/or an Environmental Impact Statement pursuant to the National Environmental Policy Act. Comments are also used to determine the need for a public hearing and to determine the overall public interest of the activity.

The proposed discharge will be evaluated for compliance with guidelines promulgated by the Environmental Protection Agency under authority of Section 404(b)(1) of the Clean Water Act. These guidelines require an alternatives analysis for any proposed discharge of dredged or fill material into waters of the United States.

ADDITIONAL EVALUATION: The State of Washington is reviewing this work for compliance with the applicable State and Federal water quality standards pursuant to Section 401 of the Clean Water Act.

This proposal is the subject of a Shorelines Substantial Development Permit being processed by Chelan County.

COMMENT AND REVIEW PERIOD: Conventional mail or e-mail comments on this public notice will be accepted and made part of the record and will be considered in determining whether it would be in the public interest to authorize this proposal. In order to be accepted, e-mail comments must originate from the author's e-mail account and must include on the subject line of the e-mail message the permit applicant's name and reference number as shown below. All e-mail comments should be sent to Deborah.J.Knaub@usace.army.mil. Conventional mail comments should be sent U.S. Army Corps of Engineers, Regulatory Branch, Post Office Box 3755, Seattle, Washington 98124-3755. Both conventional mail or e-mail comments must include the permit applicant's name and reference number, as shown below, and the commentor's name, address, and phone number. All comments whether conventional mail or e-mail must reach this office, no later than the expiration date of this public notice to ensure consideration. Please include the following name and reference number:

Ruybal, Dominique 200600179

Encl
Drawings (5)

PURPOSE: CONSTRUCTION OF A SINGLE USE PIER

ADJACENT PROPERTY OWNERS:

① KOLLMEYER
3334 SOUTH LAKESHORE ROAD
CHELAN, WA 98816

② ABRAHAMSON
3300 SOUTH LAKESHORE ROAD
CHELAN, WA 98816

VICINITY MAP

Grette Associates LLC
ENVIRONMENTAL CONSULTANTS

200600179

RUYBAL PIER
IN: LAKE CHELAN
AT: RUYBAL PROPERTY
SOUTH LAKESHORE ROAD
CHELAN, WA 98816

COUNTY OF: CHELAN
STATE: WA
APPLICATION BY: DOMINIQUE RUYBAL

SHEET NO. 1 OF 5 DATE: 1/17/06

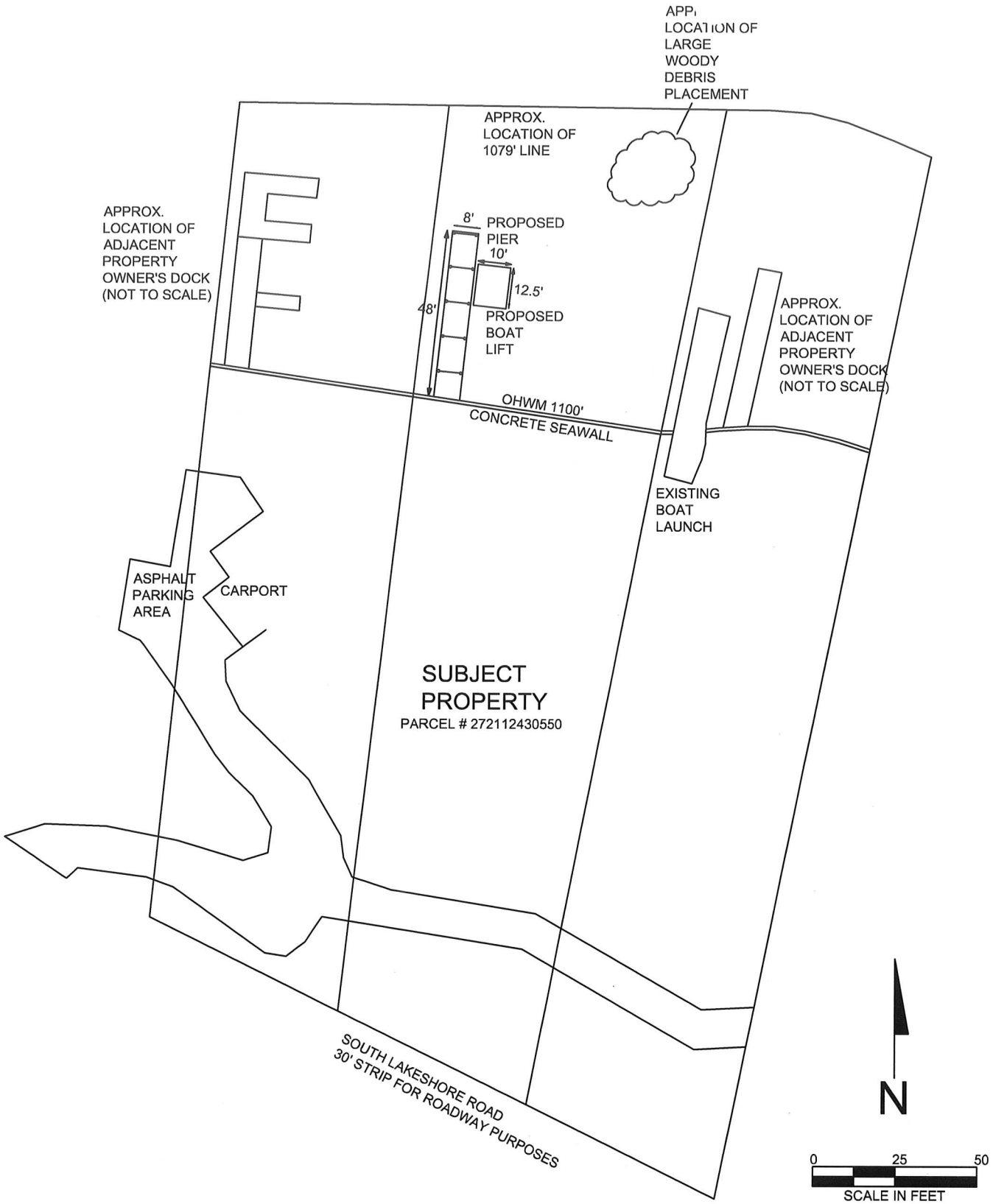

PURPOSE: CONSTRUCTION OF A SINGLE USE PIER

ADJACENT PROPERTY OWNERS:

① KOLLMEYER
3334 SOUTH LAKESHORE ROAD
CHELAN, WA 98816

② ABRAHAMSON
3300 SOUTH LAKESHORE ROAD
CHELAN, WA 98816

SITE PLAN

Grette Associates LLC
ENVIRONMENTAL CONSULTANTS

200600179

RUYBAL PIER

IN: LAKE CHELAN
AT: RUYBAL PROPERTY
SOUTH LAKESHORE ROAD
CHELAN, WA 98816

COUNTY OF: CHELAN
STATE: WA
APPLICATION BY: DOMINIQUE RUYBAL

SHEET NO. 2 OF 5 DATE: 1/17/06

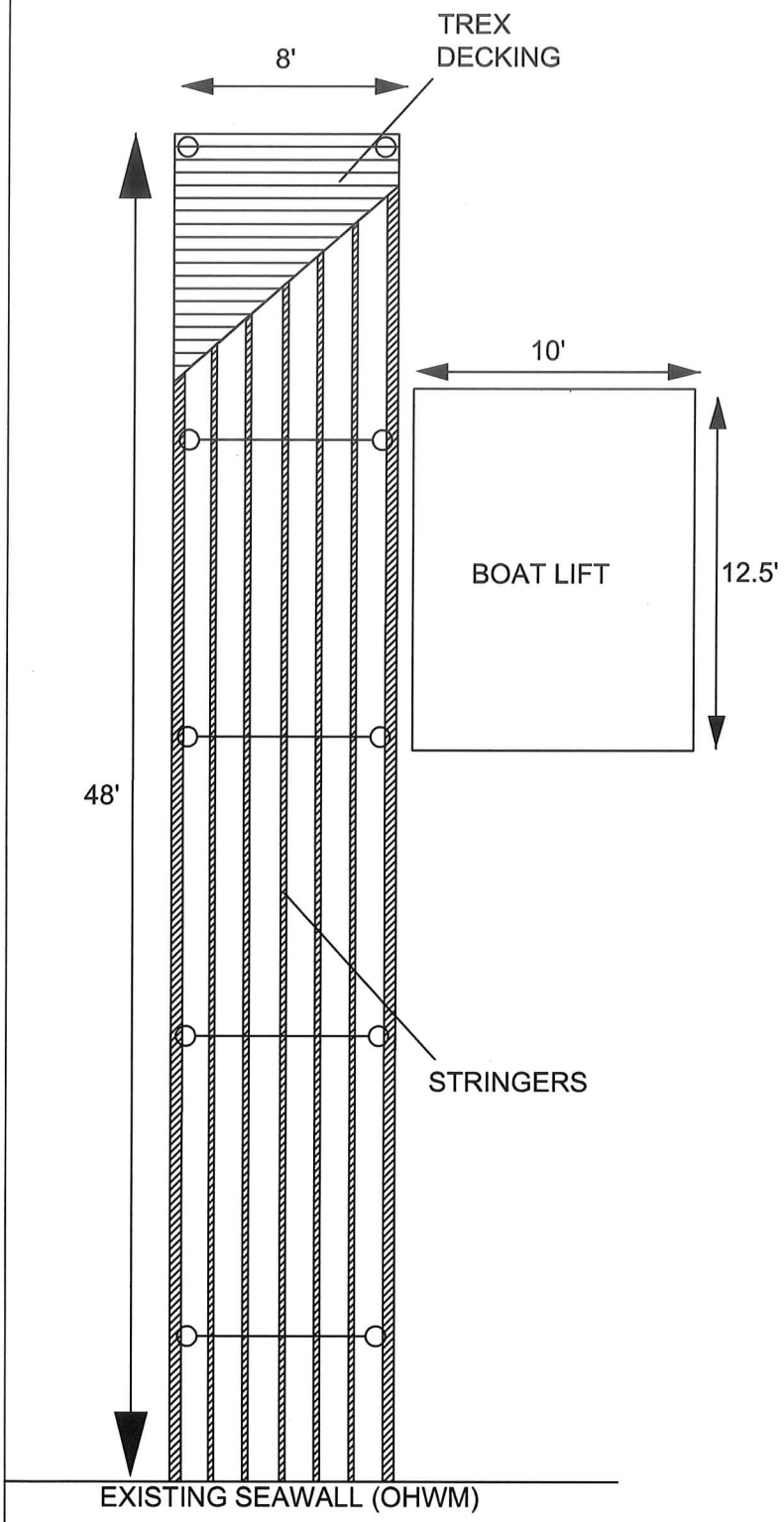

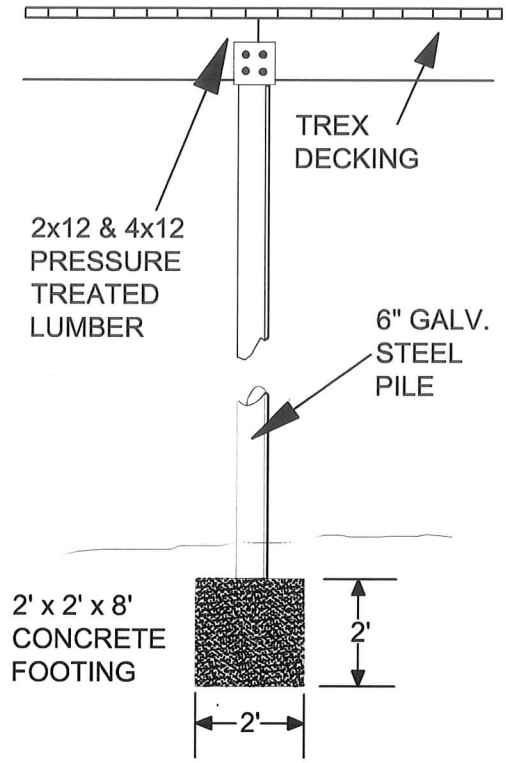

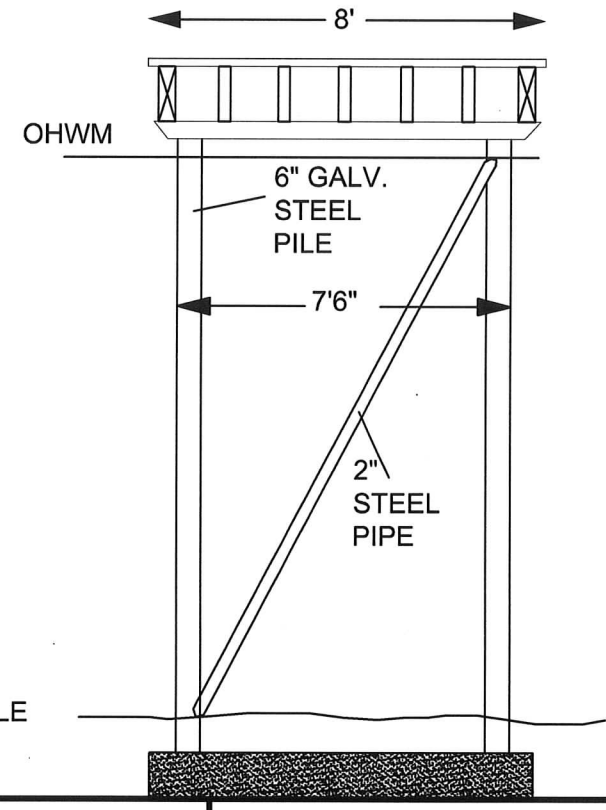

NOT TO SCALE

PURPOSE: CONSTRUCTION OF A SINGLE USE PIER

ADJACENT PROPERTY OWNERS:

① KOLLMEYER
3334 SOUTH LAKESHORE ROAD
CHELAN, WA 98816

② ABRAHAMSON
3300 SOUTH LAKESHORE ROAD
CHELAN, WA 98816

PLAN VIEW

Grette Associates LLC
ENVIRONMENTAL CONSULTANTS

200600179

RUYBAL PIER

IN: LAKE CHELAN
AT: RUYBAL PROPERTY
SOUTH LAKESHORE ROAD
CHELAN, WA 98816

COUNTY OF: CHELAN
STATE: WA
APPLICATION BY: DOMINIQUE RUYBAL

SHEET NO. 3 OF 5 DATE: 1/17/06

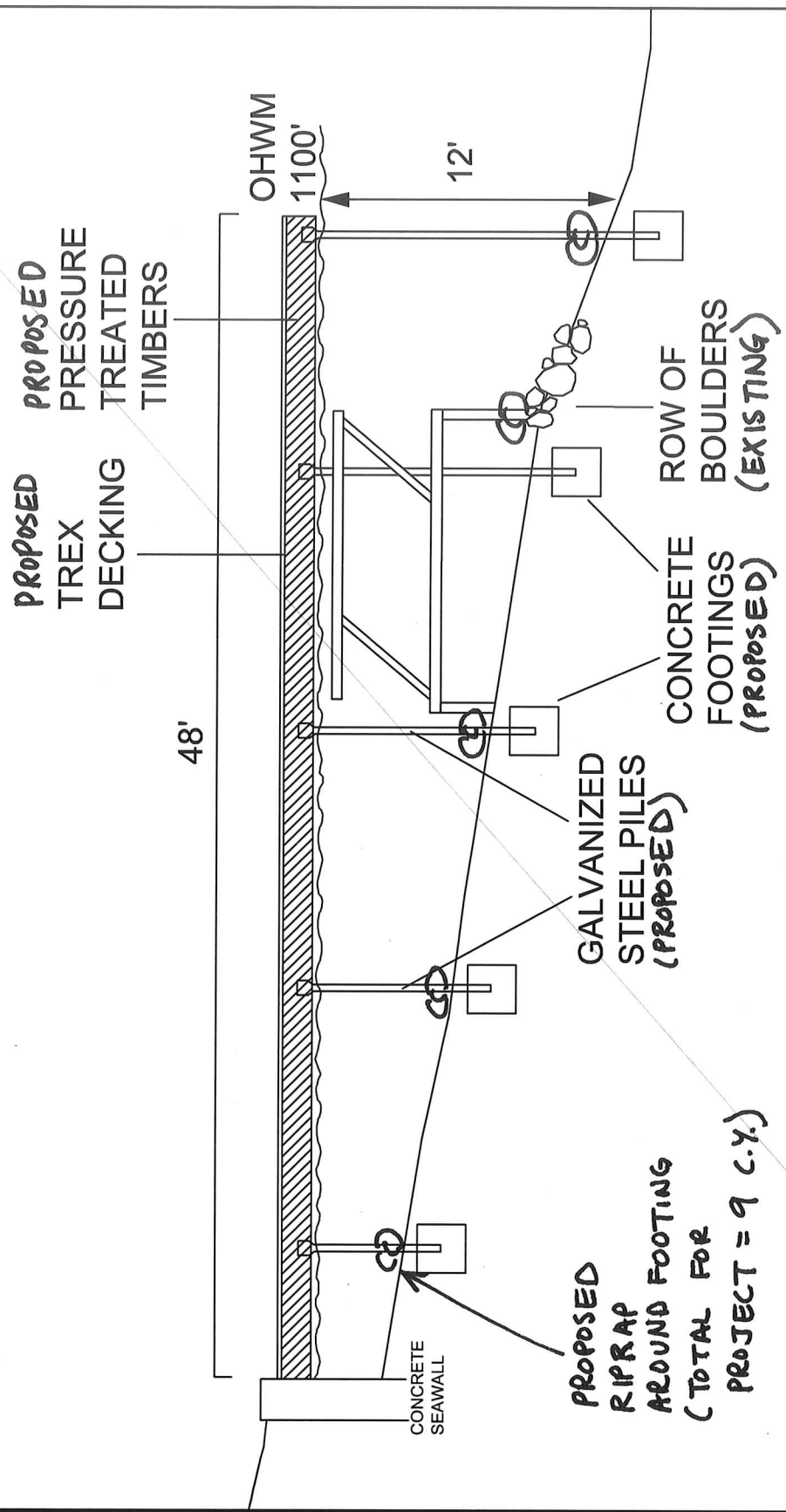

PURPOSE: CONSTRUCTION OF A SINGLE USE PIER

ADJACENT PROPERTY OWNERS:

① KOLLMEYER
3334 SOUTH LAKESHORE ROAD
CHELAN, WA 98816

② ABRAHAMSON
3300 SOUTH LAKESHORE ROAD
CHELAN, WA 98816

CROSS SECTION

Grette Associates LLC
ENVIRONMENTAL CONSULTANTS

200600179

RUYBAL PIER

IN: LAKE CHELAN
AT: RUYBAL PROPERTY
SOUTH LAKESHORE ROAD
CHELAN, WA 98816

COUNTY OF: CHELAN
STATE: WA
APPLICATION BY: DOMINIQUE RUYBAL

SHEET NO. 4 OF 5 DATE: 1/17/06

COMPLEX LWD STRUCTURE

7 LARGE, WHOLE MATURE FRUIT TREES (APPLE OR CHERRY) W/ LIMBS & ROOT WADS, 8'-10' LONG

(DIAGRAM DEPICTS CONIFER STUMPS; ORCHARD TREES WILL HAVE LIMBS AND ROOT WAD)

PURPOSE: CONSTRUCTION OF A SINGLE USE PIER

ADJACENT PROPERTY OWNERS:

① KOLLMEYER
3334 SOUTH LAKESHORE ROAD
CHELAN, WA 98816

② ABRAHAMSON
3300 SOUTH LAKESHORE ROAD
CHELAN, WA 98816

LARGE WOODY DEBRIS DIAGRAM

Grette Associates LLC
ENVIRONMENTAL CONSULTANTS

200600179

RUYBAL PIER

IN: LAKE CHELAN
AT: RUYBAL PROPERTY
SOUTH LAKESHORE ROAD
CHELAN, WA 98816

COUNTY OF: CHELAN
STATE: WA
APPLICATION BY: DOMINIQUE RUYBAL

SHEET NO. 5 OF 5 DATE: 1/17/06

STATE OF WASHINGTON
DEPARTMENT OF ECOLOGY
P.O. Box 47600 • Olympia, Washington 98504-7600
(360) 407-6000 • TDD Only (Hearing Impaired) (360) 407-6006

STATE OF WASHINGTON
DEPARTMENT OF ECOLOGY

Notice of Application for
Water Quality Certification

Date: May 16, 2006

Notice is hereby given that a request has been filed with the Department of Ecology, pursuant to the requirements of Section 401 of the federal Clean Water Act of 1977 (PL 95-217), to certify that the project described in the U.S. Army Corps of Engineers Public Notice No. 200600179 will comply with the Sections 301, 302, 303, 306, and 307 of the Act, and with applicable provisions of State and Federal water pollution control laws.

Any person desiring to present views on the project pertaining to compliance with water pollution control laws may do so by providing written comments within 30 days of the above publication date to:

Federal Permit Coordinator
Department of Ecology
SEA Program
Post Office Box 47600
Olympia, Washington 98504-7600