© Copyrighted Document 2004 Geiger Gossen Hamilton Campbell Engineers, P.C.

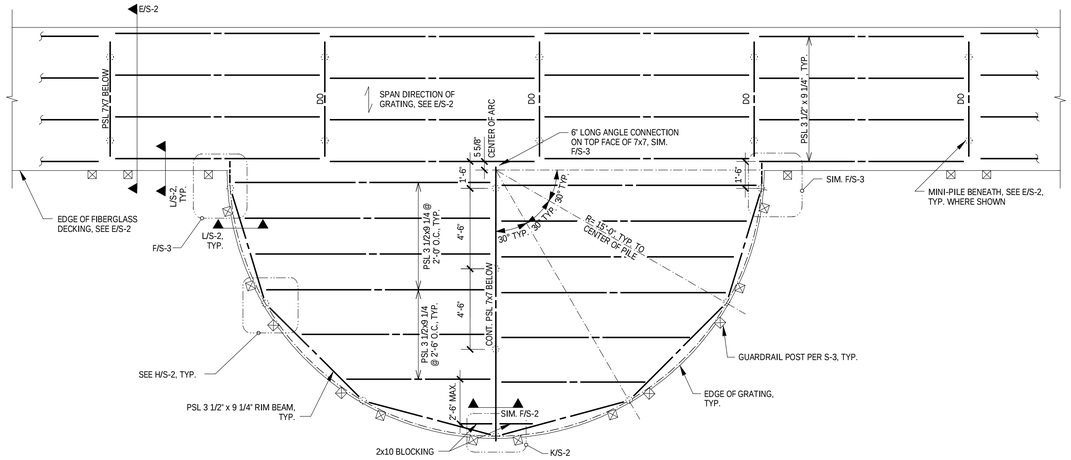

A S-2 **Typical Boardwalk Framing and North Observation Deck - "A"**

Scale: 1/4" = 1'-0"

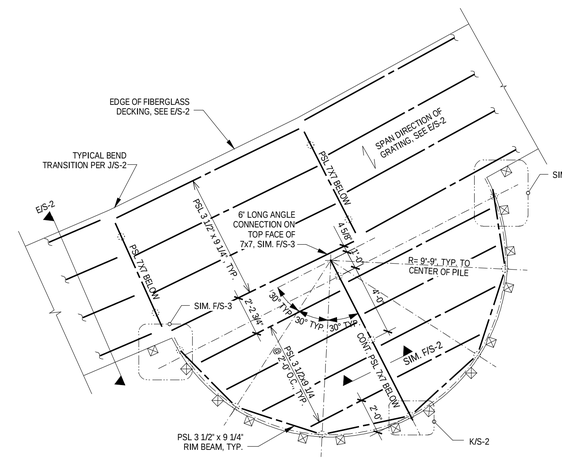

C S-2 **North Bank Observation Deck - "B"**

Scale: 1/4" = 1'-0"

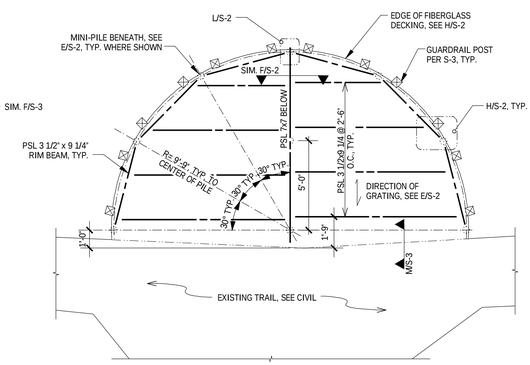

D S-2 **South Bank Observation Deck**

Scale: 1/4" = 1'-0"

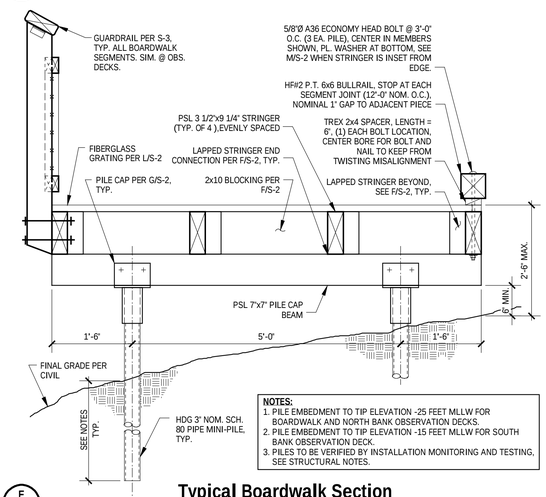

NOTES:
1. PILE EMBEDMENT TO TIP ELEVATION -25 FEET MLLW FOR BOARDWALK AND NORTH BANK OBSERVATION DECKS.
2. PILE EMBEDMENT TO TIP ELEVATION -15 FEET MLLW FOR SOUTH BANK OBSERVATION DECK.
3. PILES TO BE VERIFIED BY INSTALLATION MONITORING AND TESTING, SEE STRUCTURAL NOTES.

E S-2 **Typical Boardwalk Section**

Scale: 3/4" = 1'-0"

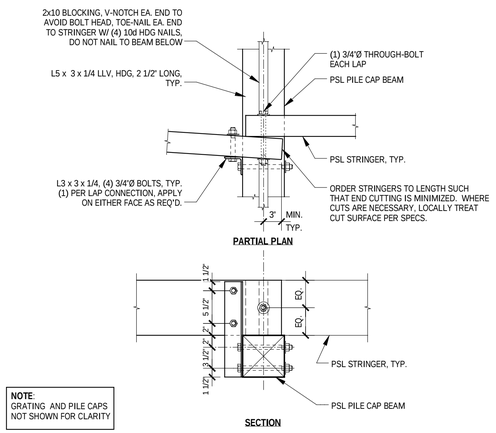

NOTE:
GRATING AND PILE CAPS NOT SHOWN FOR CLARITY

F S-2 **Typical Stringer End Connection**

Scale: 1" = 1'-0"

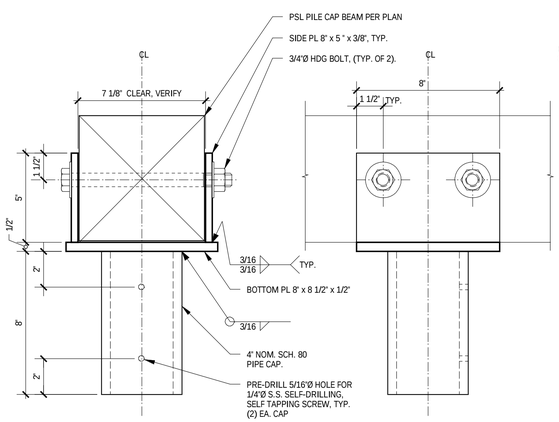

G S-2 **Pile Cap Weldment**

Scale: 3" = 1'-0"

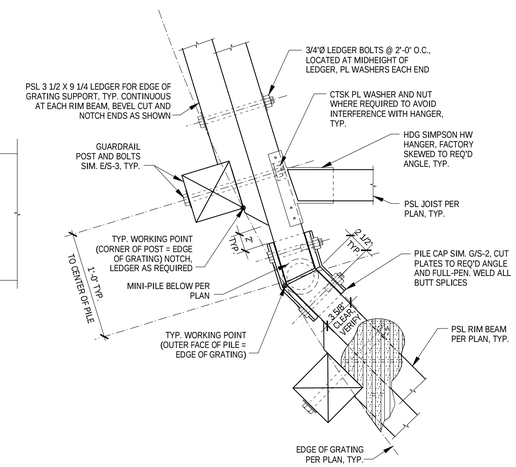

H S-2 **Typical Observation Deck Perimeter Framing Detail**

Scale: 1 1/2" = 1'-0"

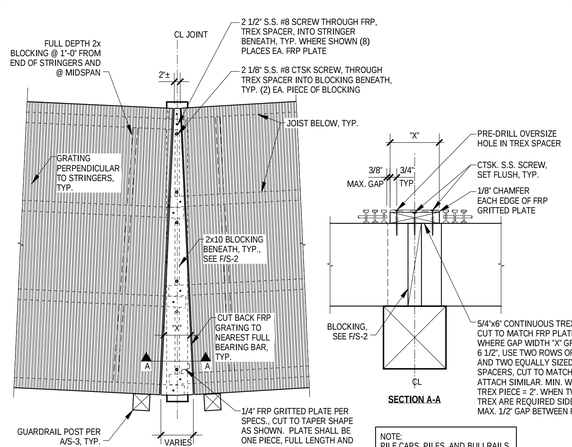

NOTE:
PILE CAPS, PILES, AND BULLRAILS NOT SHOWN FOR CLARITY.

J S-2 **Typical Boardwalk Segment Joint**

Scale: N.T.S.

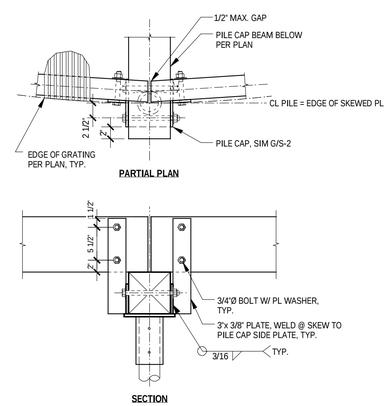

K S-2 **Typical Observation Deck Apex Framing Detail**

Scale: 1" = 1'-0"

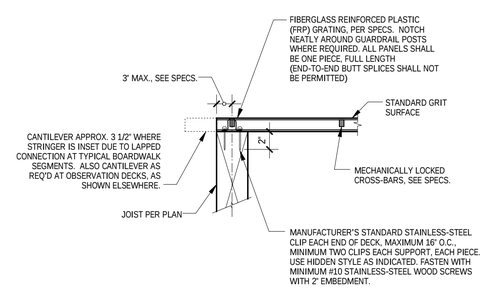

L S-2 **Typical Grating Detail**

Scale: 1 1/2" = 1'-0"

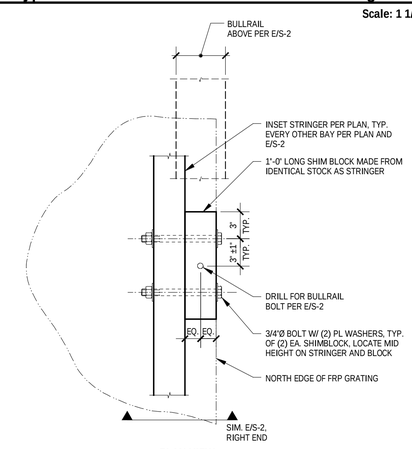

M S-2 **Typical Bullrail Attachment at Inset Stringer**

Scale: 1 1/2" = 1'-0"

GEIGER ENGINEERS
114 W. Magnolia Street Suite 505
Bellingham, WA 98225-4369
tel 360.734.7194 fax 360.734.7399
e-mail mail@geigerengineers.com

The use of these plans and specifications is restricted to the original purpose for which they were prepared. Any reproduction or distribution is limited to such use. Any other reproduction or distribution in whole or in part, without the written consent of the City of Bellingham is prohibited.

Project Name: Holly Street Landfill Cleanup / Whatcom Creek Estuary Restoration

Project Location: Bellingham, Washington

Drawing Title: Boardwalk and Observation Deck Details

No.	Issue/Revisions	Date
1	DRAFT FINAL 100%	24 FEB 04
0	90% REVIEW SET	19 DEC 03

THIS DRAWING IS AN ELECTRONIC PDF FILE. IT WAS SEALED BY THE ENGINEER OF RECORD ON 24 FEB 2004. A SEALED COPY OF THIS DRAWING MAY BE FOUND AT GEIGER ENGINEERS OFFICE LOCATED AT:
114 WEST MAGNOLIA STREET
SUITE 505
BELLINGHAM, WA 98225.

Engineers Seal

Job No: 202829.00
Drawn By: GDKinney
Checked By: DDLinkhart

Sheet: S-2

Date Printed: Tuesday, February 24, 2004 3:19:38 PM

File Name: 202829.00 S2 Details