APPENDIX A

Fuel Dock Facility Drawings

PORT OF ANACORTES

CAP SANTE BOAT HAVEN
WEST BASIN REDEVELOPMENT PROJECT

PROJECT #044-00e

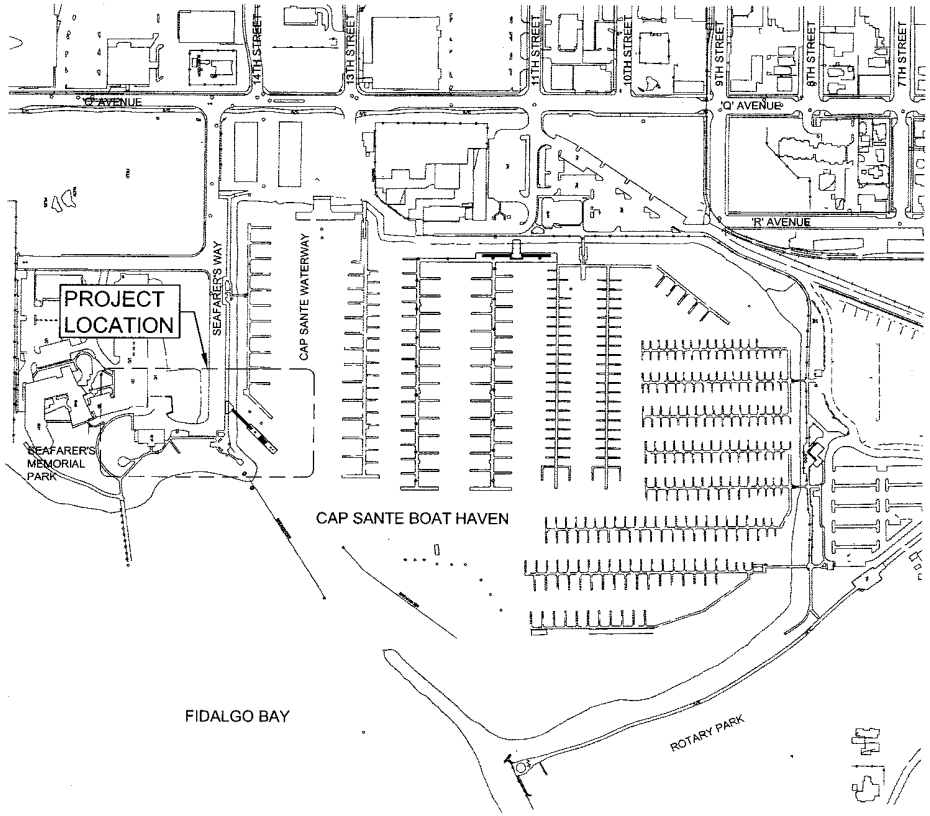

SITE MAP

No.	SHEET TITLE
	GENERAL
G-01	PROJECT TITLE & SHEET LIST
G-02	SITE PLAN
	CIVIL
C-01	CIVIL UPLAND SITE IMPROVEMENTS - GENERAL SITEWORK AND DEMOLITION PLAN
C-02	CIVIL UPLAND SITE IMPROVEMENTS - PAVING AND GRADING PLAN
C-03	CIVIL UPLAND SITE IMPROVEMENTS - VAULT DETAILS
C-04	CIVIL UPLAND SITE IMPROVEMENTS - VAULT DETAILS
C-05	CIVIL UPLAND SITE IMPROVEMENTS - UPLAND CIVIL DETAILS
	MECHANICAL
M-01	FUEL DOCK PLAN AND ELEVATION
M-02	PIPING AND INSTRUMENTATION DIAGRAM (PENDING)
M-03	TANK AND EQUIPMENT DETAILS
M-04	MISCELLANEOUS DETAILS
	ELECTRICAL
	(PENDING)

PRELIMINARY

70% PROGRESS DRAWINGS

FLOYD | SNIDER
strategy • science • engineering

kpff Consulting Engineers
101 Stewart Street, Suite 800
Seattle, Washington 98101
(206) 382-0600 Fax (206) 382-0500

NO.	DATE	BY	REVISION

CAP SANTE BOAT HAVEN
WEST BASIN REDEVELOPMENT PROJECT
PROJECT 044-00e

FUEL DOCK
PROJECT TITLE & SHEET LIST

DRAWN:	J.S.C.	PROJECT NO.:	104153
DESIGN:	M.D.K.	SCALE:	N/A
CHECKED:	S.D.S.	DATE:	04/14/05
SHEET NO.	G-01		

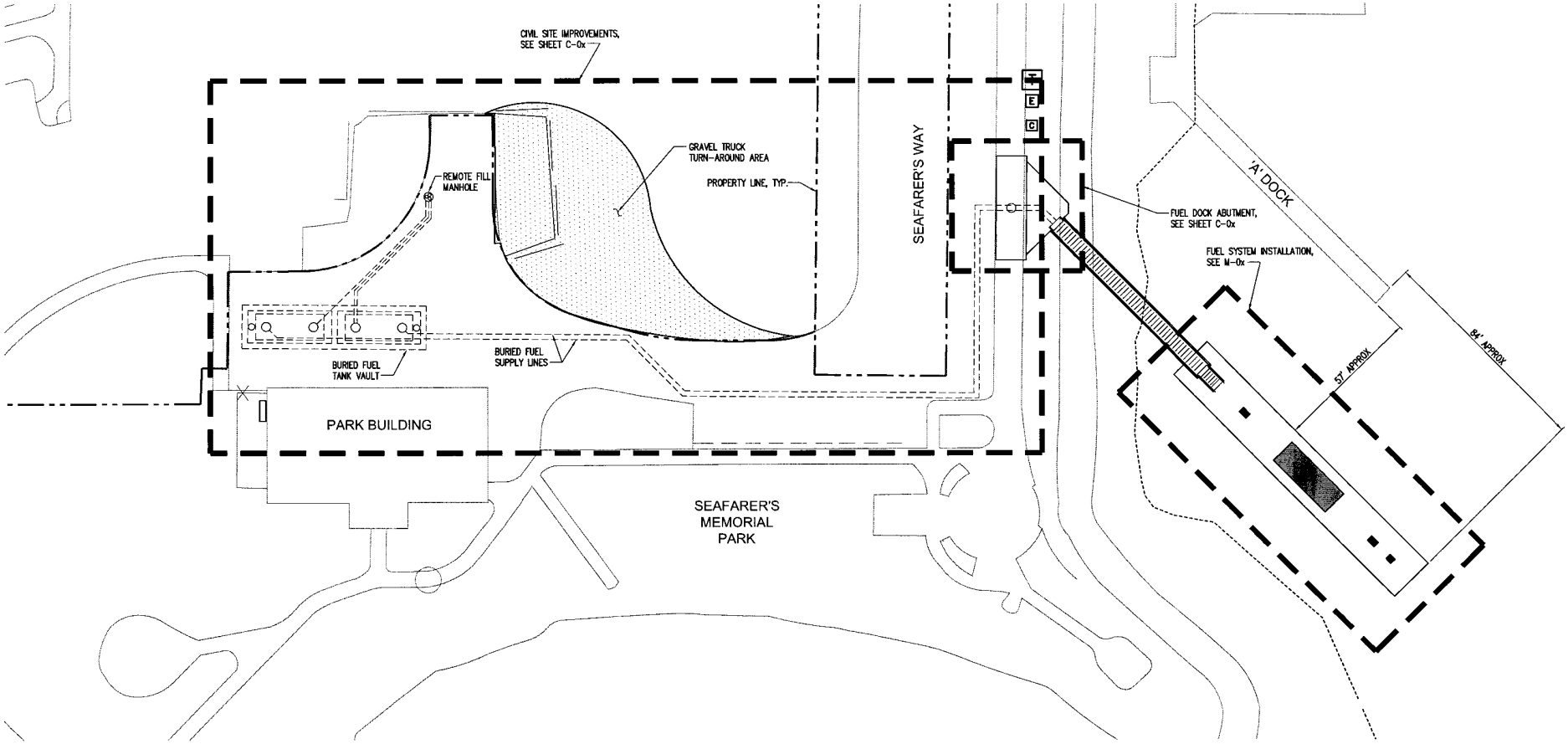

PLAN
SCALE: 1"=20'

GRAPHIC SCALE
0 10 20 40 80
1 inch = 20 ft.

NOTES:

1. XX

PRELIMINARY

FLOYD | SNIDER
strategy • science • engineering

kpff Consulting Engineers
101 Stewart Street, Suite 800
Seattle, Washington 98101
(206) 382-0600 Fax (206) 382-0500

NO.	DATE	BY	REVISION

CAP SANTE BOAT HAVEN
WEST BASIN REDEVELOPMENT PROJECT
PROJECT 044-00e

FUEL DOCK
SITE PLAN

DRAWN: J.S.C.	PROJECT NO.:104153
DESIGN: M.D.K.	SCALE: AS SHOWN
CHECKED: S.D.S.	DATE: 04/14/05
SHEET NO. G-02	

70% PROGRESS DRAWINGS

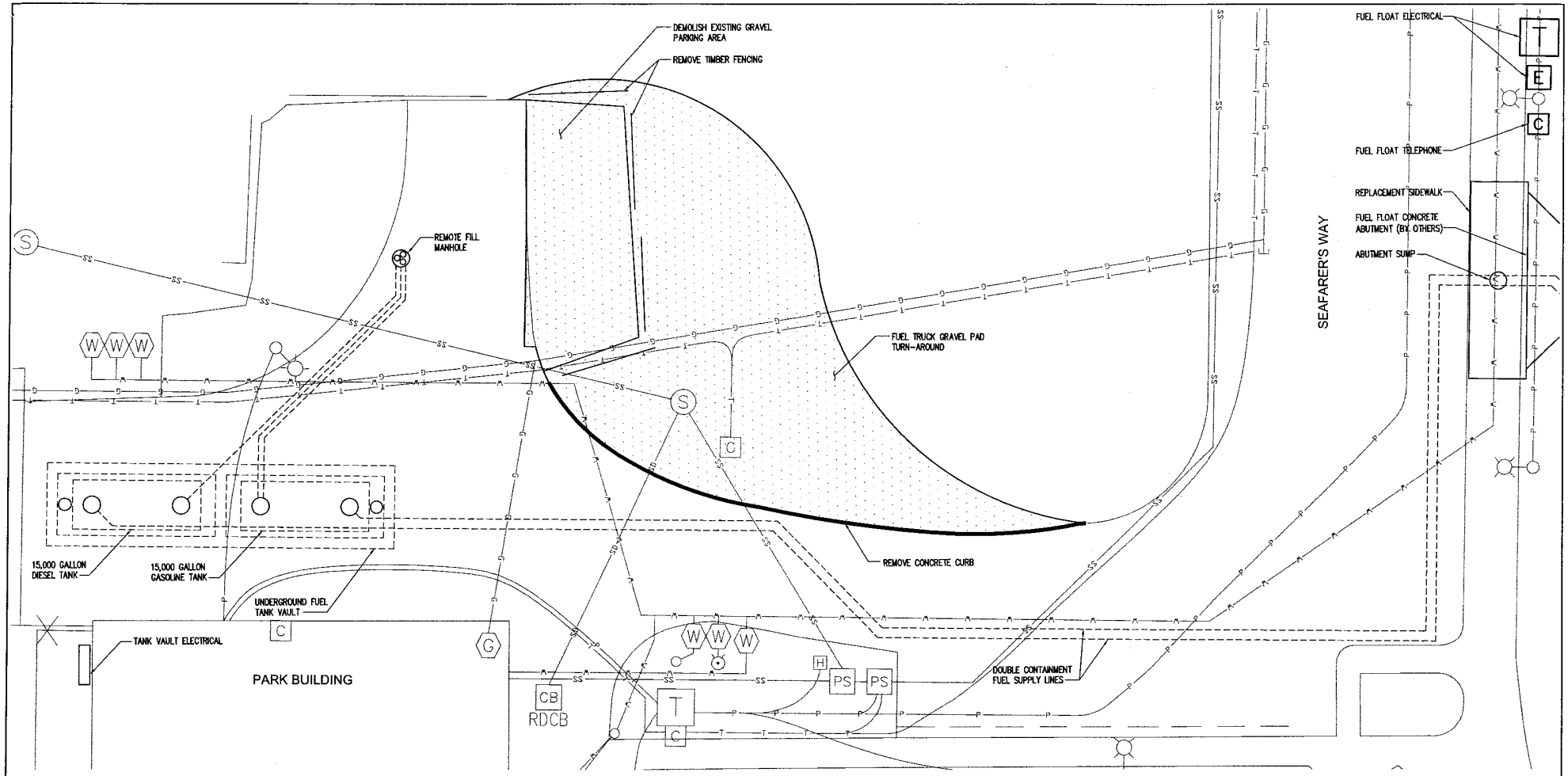

PLAN
SCALE: 1"=10'

GRAPHIC SCALE
0 5 10 20 40
1 inch = 10 ft.

NOTES:

PRELIMINARY

70% PROGRESS DRAWINGS

FLOYD | SNIDER
strategy • science • engineering

kpff Consulting Engineers
101 Stewart Street, Suite 800
Seattle, Washington 98101
(206) 382-0600 Fax (206) 382-0500

NO.	DATE	BY	REVISION

CAP SANTE BOAT HAVEN
WEST BASIN REDEVELOPMENT PROJECT
PROJECT 044-00e

FUEL DOCK
CIVIL UPLANDS SITE IMPROVEMENTS
GENERAL SITEWORK AND DEMOLITION PLAN

DRAWN:	J.S.C.	PROJECT NO.:	104153
DESIGN:	M.D.K.	SCALE:	AS SHOWN
CHECKED:	S.D.S.	DATE:	04/14/05
SHEET NO.			C-01

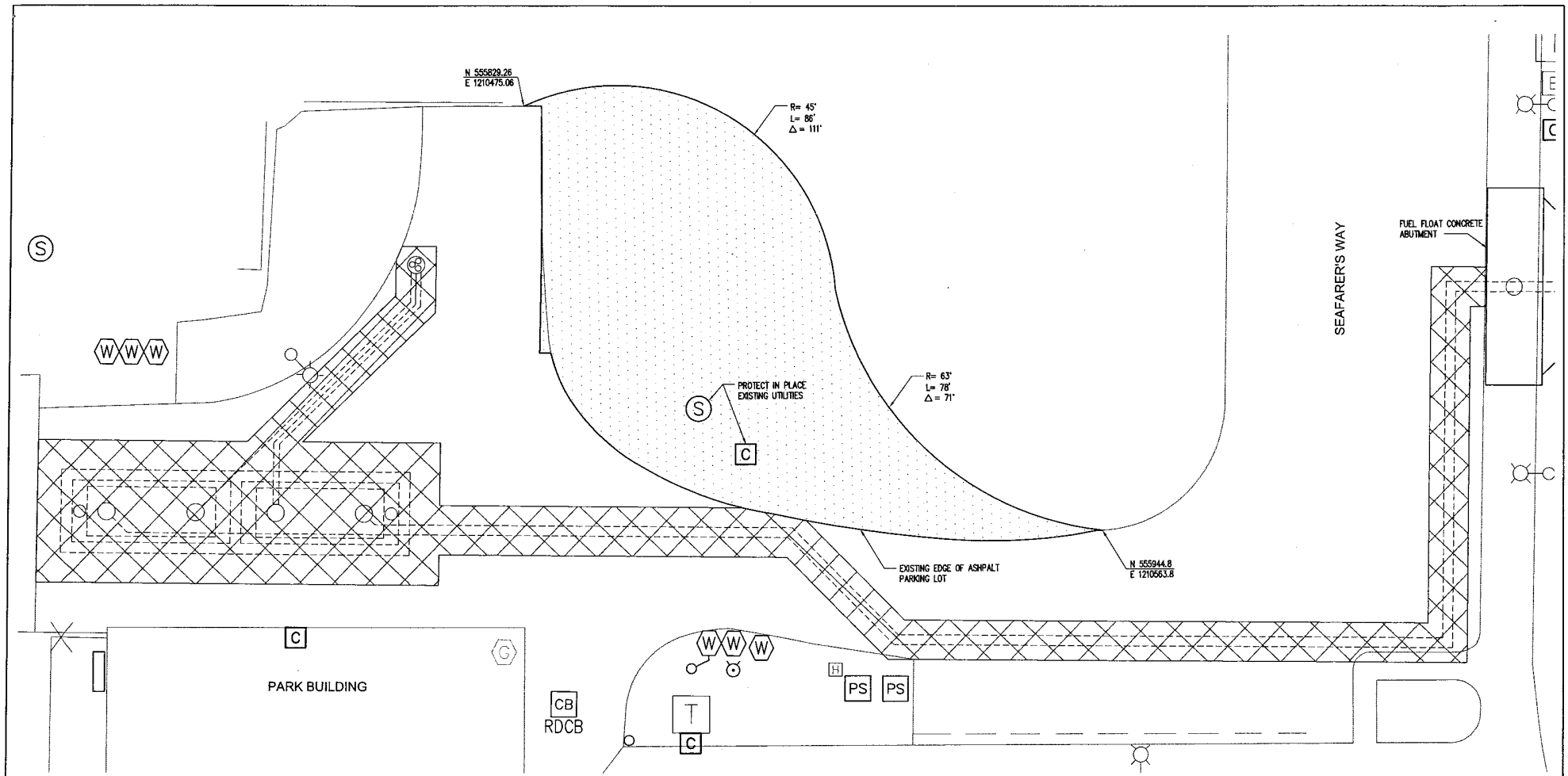

LEGEND:

GRAVEL PAD

FULL DEPTH PAVEMENT REPLACEMENT

PLAN
SCALE: 1"=10'

GRAPHIC SCALE
0 5 10 20 40
1 inch = 10 ft.

NOTES:

PRELIMINARY

1. FULL DEPTH PAVEMENT REPLACEMENT AT FUEL SUPPLY LINE TRENCH SHALL BE CONSTRUCTED PER DETAIL 1/C-05
2. CONSTRUCT FUEL TANK GRAVEL PAD PER DETAIL 3/C-05
3. CONSTRACTOR TO MATCH EXISTING ELEVATIONS AT THE EDGES OF THE FUEL VAULT EXCAVATION, UTILITY TRENCH AND GRAVEL PAD.

FLOYD | SNIDER
strategy • science • engineering

kpff Consulting Engineers
101 Stewart Street, Suite 800
Seattle, Washington 98101
(206) 382-0600 Fax (206) 382-0500

NO.	DATE	BY	REVISION

CAP SANTE BOAT HAVEN
WEST BASIN REDEVELOPMENT PROJECT
PROJECT 044-00e

FUEL DOCK

CIVIL UPLANDS SITE IMPROVEMENTS
PAVING & GRADING PLAN

DRAWN:	J.S.C.	PROJECT NO.:	104153
DESIGN:	M.D.K.	SCALE:	AS SHOWN
CHECKED:	S.D.S.	DATE:	04/14/05
SHEET NO.			C-02

70% PROGRESS DRAWINGS

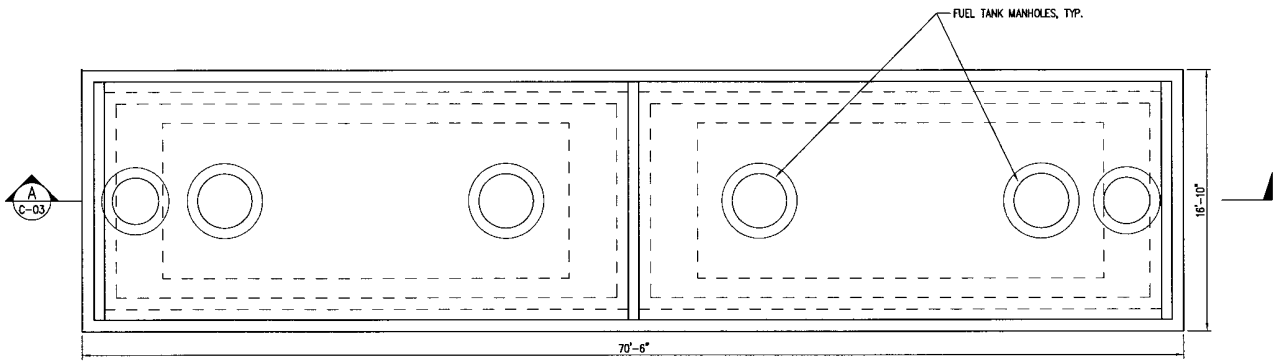

FUEL VAULT PLAN
SCALE: 1/4"=1'

GRAPHIC SCALE
0 1/8 1/4 1/2 1
1 inch = 1/4 ft.

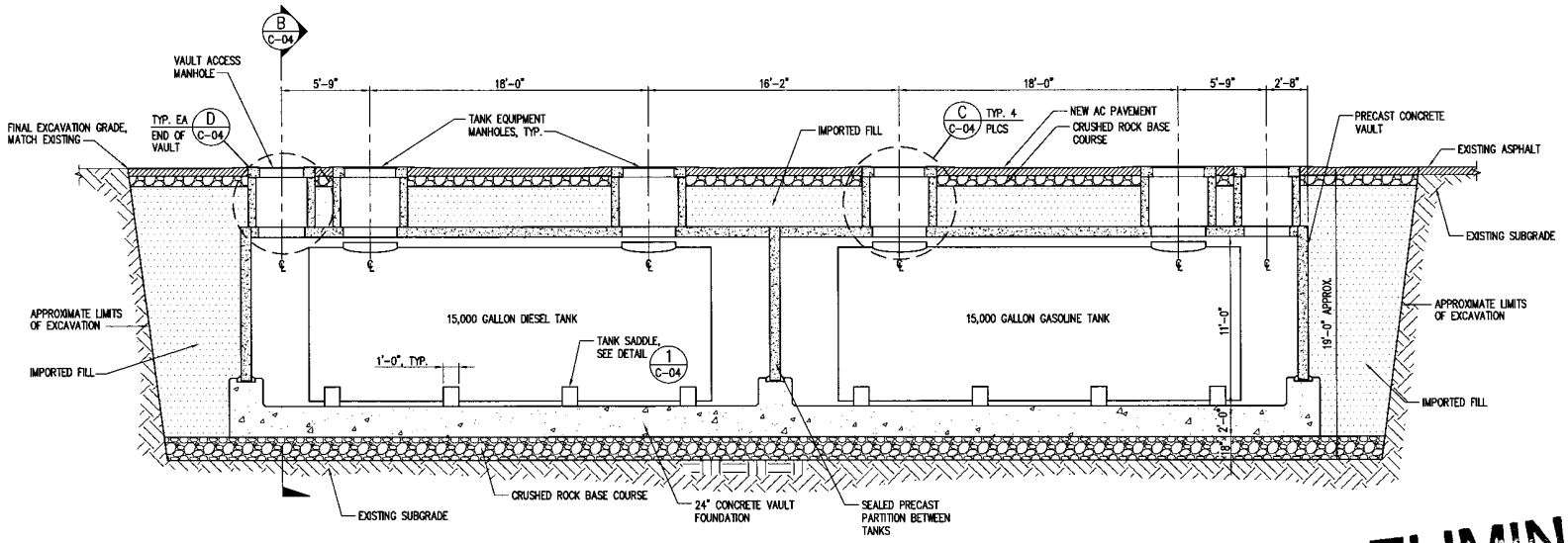

FUEL VAULT SECTION (A / C-03)
SCALE: 1/4" = 1'

PRELIMINARY

70% PROGRESS DRAWINGS

FLOYD | SNIDER
strategy • science • engineering

kpff Consulting Engineers
101 Stewart Street, Suite 800
Seattle, Washington 98101
(206) 382-0600 Fax (206) 382-0500

NO.	DATE	BY	REVISION

CAP SANTE BOAT HAVEN
WEST BASIN REDEVELOPMENT PROJECT
PROJECT 044-00e

FUEL DOCK
CIVIL UPLAND SITE IMPROVEMENTS
VAULT DETAILS

DRAWN: J.S.C.	PROJECT NO.:104153
DESIGN: M.D.K.	SCALE: AS SHOWN
CHECKED: S.D.S.	DATE: 04/14/05
SHEET NO.	C-03

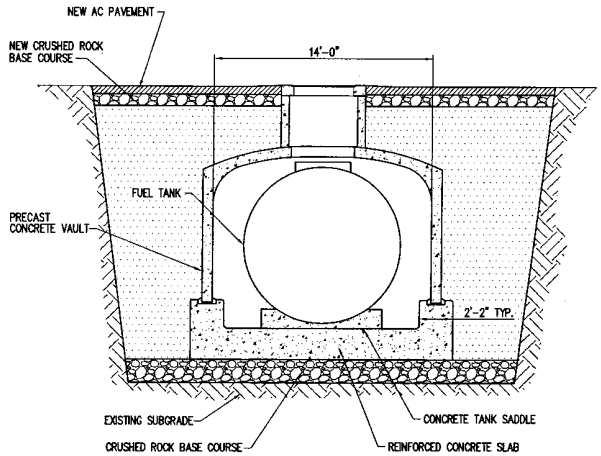

FUEL VAULT SECTION (B / C-04)
SCALE: N.T.S.

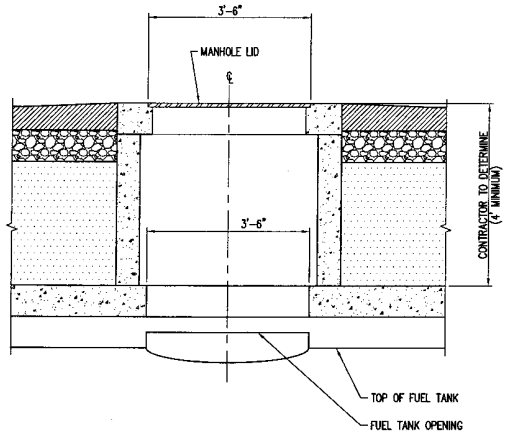

TANK EQUIPMENT 42"Ø MANHOLE SECTION (C / C-04)
SCALE: N.T.S.

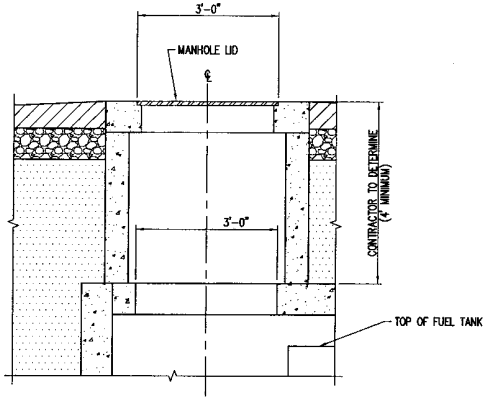

VAULT ACCESS 36"Ø MANHOLE SECTION (D / C-04)
SCALE: N.T.S.

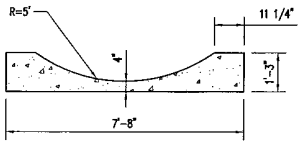

CONCRETE TANK SADDLES (1 / C-04)
SCALE: N.T.S.

PRELIMINARY

FLOYD | SNIDER
strategy • science • engineering

kpff Consulting Engineers
101 Stewart Street, Suite 800
Seattle, Washington 98101
(206) 382-0600 Fax (206) 382-0500

NO.	DATE	BY	REVISION

PORT OF TACOMA EST. 1918

CAP SANTE BOAT HAVEN
WEST BASIN REDEVELOPMENT PROJECT
PROJECT 044-00e

FUEL DOCK
CIVIL UPLAND SITE IMPROVEMENTS
VAULT DETAILS

DRAWN:	J.S.C.	PROJECT NO.:	104153
DESIGN:	M.D.K.	SCALE:	AS SHOWN
CHECKED:	S.D.S.	DATE:	04/14/05
SHEET NO.	C-04		

70% PROGRESS DRAWINGS

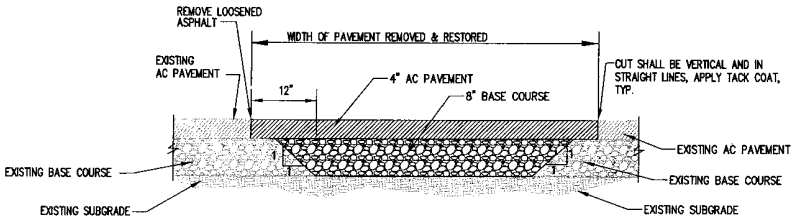

FULL DEPTH PAVEMENT REPLACEMENT (1 / C-05)
SCALE: SCALE: N.T.S.

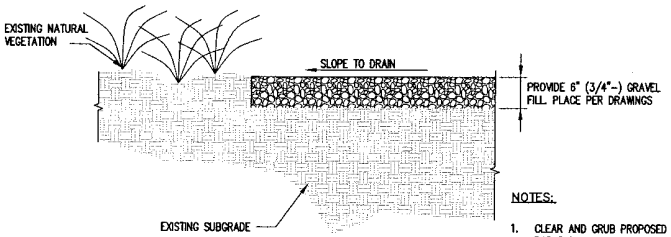

NOTES:

1. CLEAR AND GRUB PROPOSED AREA OF FUEL TRUCK GRAVEL PAD TURN-AROUND.
2. COMACT EXISTING SUBGRADE.
3. FINISHED GRADES SHALL MATCH EXISTING AT EDGE OF ASPHALT PARKING LOT.

GRAVEL PAD DETAIL (2 / C-05)
SCALE: SCALE: N.T.S.

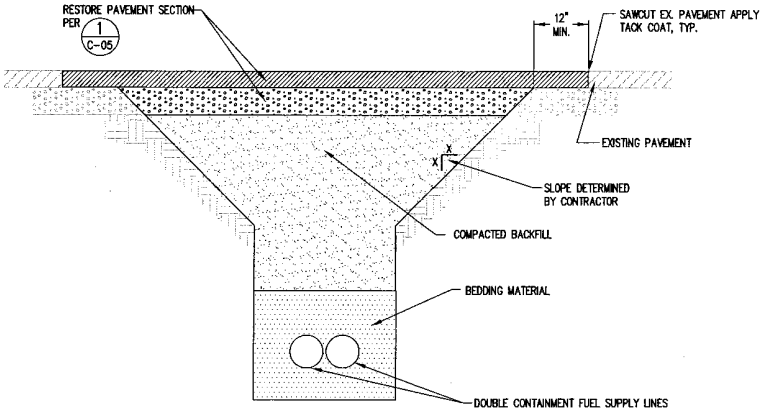

FUEL SUPPLY LINES TRENCH DETAIL (3 / C-05)
SCALE: SCALE: N.T.S.

PRELIMINARY

FLOYD | SNIDER
strategy • science • engineering

kpff Consulting Engineers
101 Stewart Street, Suite 800
Seattle, Washington 98101
(206) 382-0600 Fax (206) 382-0500

NO.	DATE	BY	REVISION

CAP SANTE BOAT HAVEN
WEST BASIN REDEVELOPMENT PROJECT
PROJECT 044-00e

FUEL DOCK
CIVIL UPLAND SITE IMPROVEMENTS
UPLAND CIVIL DETAILS

DRAWN:	J.S.C.	PROJECT NO.:	104153
DESIGN:	M.D.K.	SCALE:	AS SHOWN
CHECKED:	S.D.S.	DATE:	04/14/05
SHEET NO.	C-05		

70% PROGRESS DRAWINGS

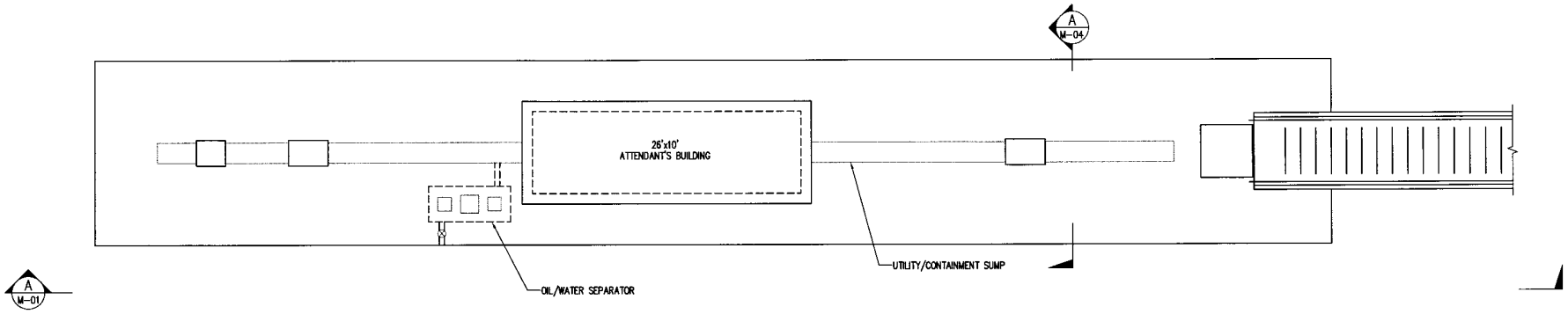

FUEL DOCK PLAN
SCALE: 3/16"=1'-0"

NOTES:

1. XX

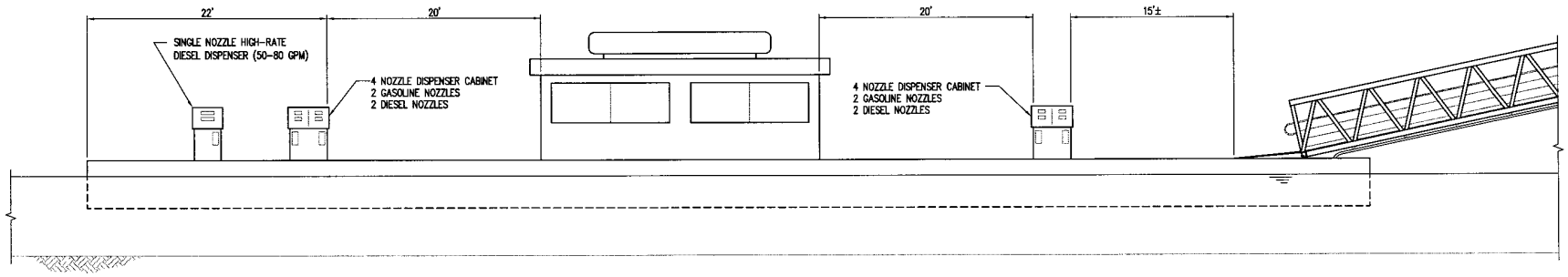

ELEVATION
SCALE: 3/16"=1'-0"
A
M-01

PRELIMINARY

70% PROGRESS DRAWINGS

FLOYD | SNIDER
strategy • science • engineering

kpff Consulting Engineers
101 Stewart Street, Suite 800
Seattle, Washington 98101
(206) 382-0600 Fax (206) 382-0500

NO.	DATE	BY	REVISION

CAP SANTE BOAT HAVEN
WEST BASIN REDEVELOPMENT PROJECT
PROJECT 044-00e

FUEL DOCK
FUEL DOCK PLAN AND ELEVATION

DRAWN: J.S.C.	PROJECT NO.: 104153
DESIGN: M.D.K.	SCALE: AS SHOWN
CHECKED: S.D.S.	DATE: 04/14/05
SHEET NO.	

M-01

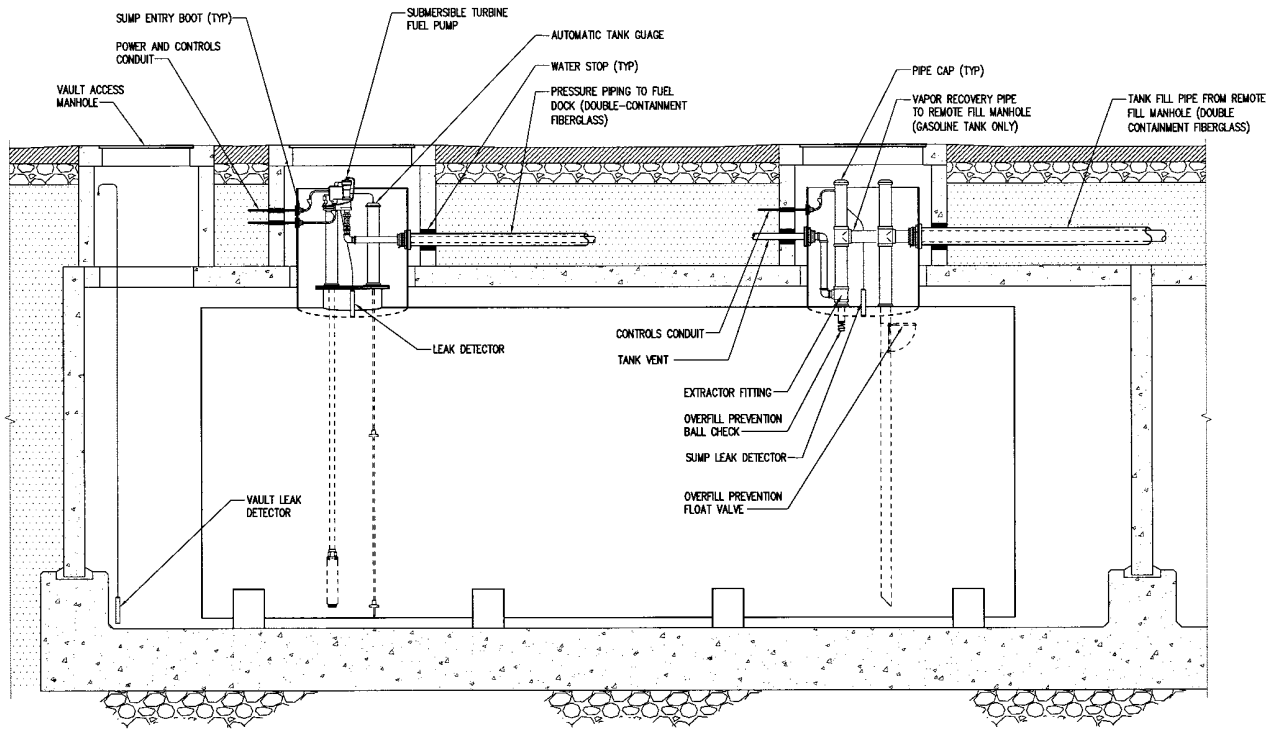

TYPICAL TANK EQUIPMENT INSTALLATION (1)

SCALE: 1/2"=1'-0"

NOTE: HORIZONTAL PIPING AND CONDUIT SHOWN OUT OF POSITION FOR CLARITY.

PRELIMINARY

FLOYD | SNIDER
strategy • science • engineering

kpff Consulting Engineers
101 Stewart Street, Suite 800
Seattle, Washington 98101
(206) 382-0600 Fax (206) 382-0500

NO.	DATE	BY	REVISION

CAP SANTE BOAT HAVEN
WEST BASIN REDEVELOPMENT PROJECT
PROJECT 044-00e

FUEL DOCK
TANK AND EQUIPMENT DETAILS

DRAWN:	J.S.C.	PROJECT NO.:	104153
DESIGN:	M.D.K.	SCALE:	AS SHOWN
CHECKED:	S.D.S.	DATE:	04/14/05
SHEET NO.			M-03

70% PROGRESS DRAWINGS

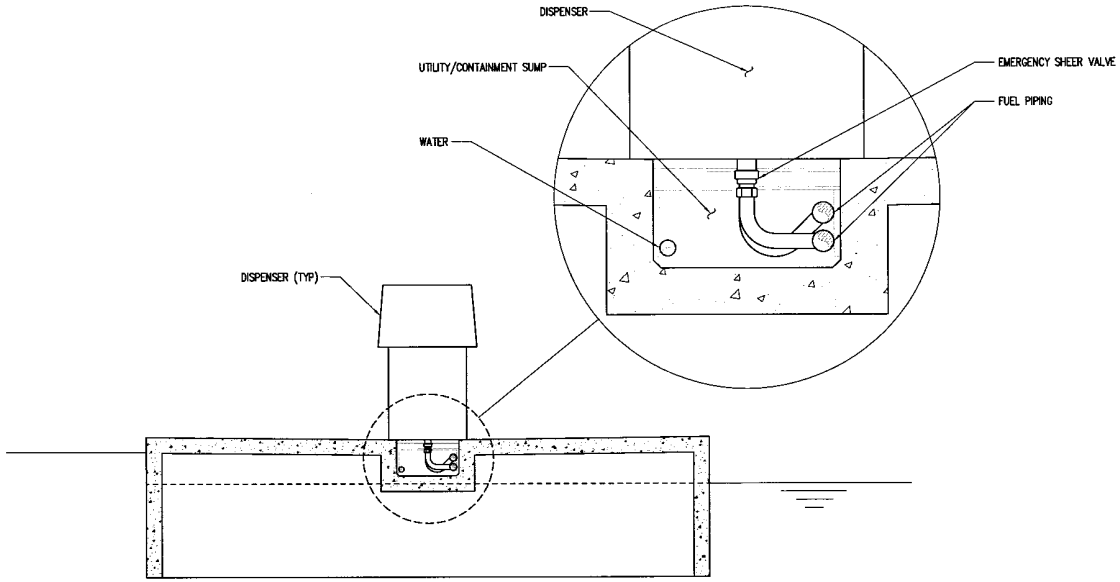

SECTION A M-01
SCALE: 1/2"=1'-0"

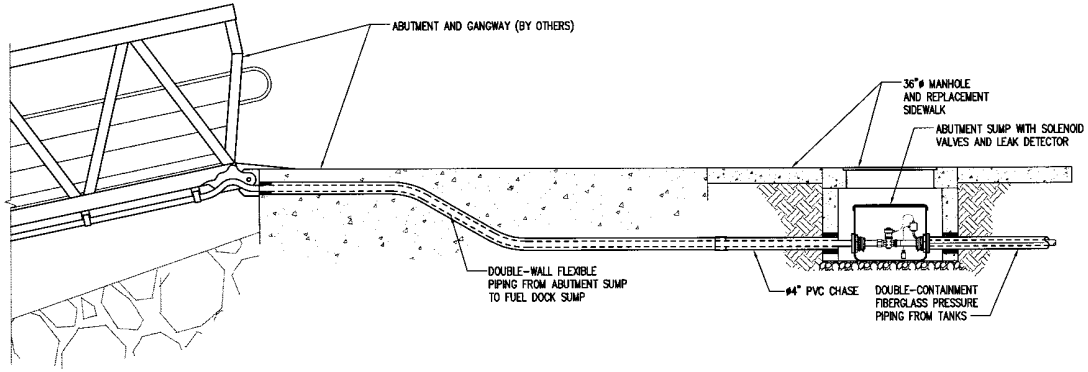

SECTION B M-01
SCALE: 1/2"=1'-0"

PRELIMINARY

FLOYD | SNIDER
strategy • science • engineering

kpff Consulting Engineers
101 Stewart Street, Suite 800
Seattle, Washington 98101
(206) 382-0600 Fax (206) 382-0500

NO.	DATE	BY	REVISION

PORT OF TACOMA EST. 1920

CAP SANTE BOAT HAVEN
WEST BASIN REDEVELOPMENT PROJECT
PROJECT 044-00e

FUEL DOCK
SECTION

DRAWN: J.S.C.	PROJECT NO.:104153
DESIGN: M.D.K.	SCALE: AS SHOWN
CHECKED: S.D.S.	DATE: 04/14/05
SHEET NO. M-04	

70% PROGRESS DRAWINGS

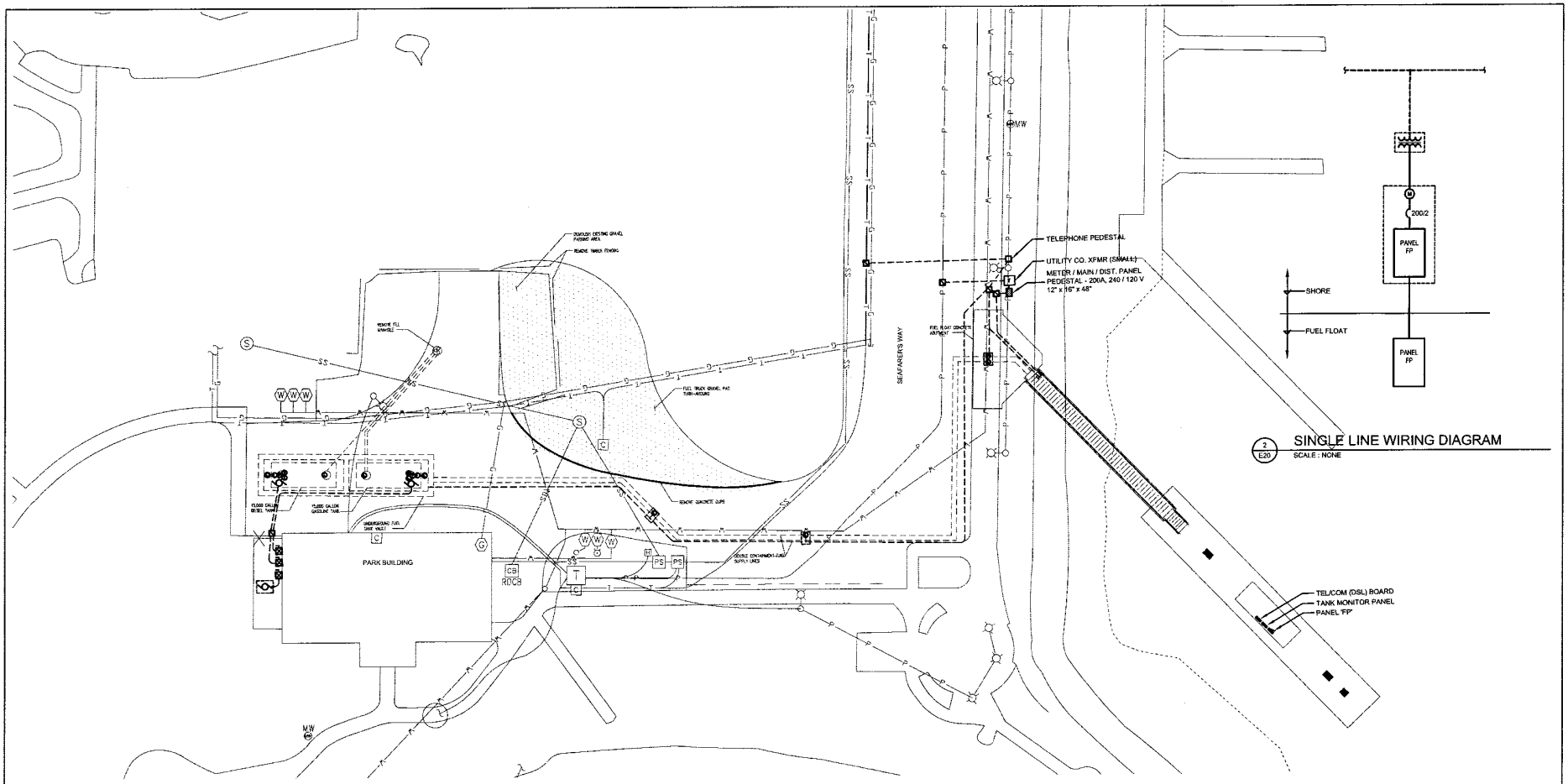

2 E20 SINGLE LINE WIRING DIAGRAM
SCALE : NONE

1 E20 ELECTRICAL SITE PLAN
SCALE : 1"=20'-0"

GRAPHIC SCALE
1 inch = 20 ft.

PRELIMINARY

70% PROGRESS DRAWINGS

kpff Consulting Engineers
101 Stewart Street, Suite 800
Seattle, Washington 98101
(206) 382-0600 Fax (206) 382-0500

NO.	DATE	BY	REVISION

CAP SANTE BOAT HAVEN
WEST BASIN REDEVELOPMENT PROJECT
PROJECT 044-00e

FUEL DOCK
ELECTRICAL SITE PLAN

DRAWN: D.K.D	PROJECT NO.: 104153
DESIGN: E.J.D	SCALE: AS SHOWN
CHECKED: E.J.D	DATE: 04/12/06
SHEET NO.	E-02