Stormwater Management Manual for Western Washington

Volume V
Runoff Treatment BMPs

Prepared by:
Washington State Department of Ecology
Water Quality Program

August 2012
Publication No. 12-10-030
(A revision of Publication No. 05-10-033)

Acknowledgments

The Washington State Department of Ecology gratefully acknowledges the valuable time, comments, and expertise provided by the people listed below who contributed to the 2012 revision of Volume V of the SWMMWW. The Washington State Department of Ecology is solely responsible for any errors, omissions, and final decisions related to the 2012 SWMMWW.

Name	**Affiliation**
Ed Abbasi	Dept. of Ecology, Water Quality, NWRO
Pat Allen	Thurston County
Hebe C. Bernardo	City of Renton
Steve Hood	Dept. of Ecology, Water Quality, BFO
Kurt Marx	Washington Stormwater Center
Chris May	Kitsap County Public Works
Maureen Meehan	City of Seattle
Valerie Monsey	City of Issaquah
William M. Reilly	City of Bellingham
Kristen Terpstra	City of Bothell
Anthony Whiley	Dept. of Ecology, Water Quality
Jane Zimmerman	City of Everett

Ecology Technical Leads
Ed O'Brien, P.E. – 2005 edit and 2012 edit
Douglas C. Howie, P.E. – 2012 edit

Technical Review and Editing
Kathleen Emmett – 2012 edit
Daniel S. Gariépy, P.E. – 2012 edit
Carrie A. Graul – 2012 edit
Julie Robertson – 2012 edit
Kelsey Highfill – 2012 edit

Table of Contents

Acknowledgments ..... **ii**

Chapter 1. - Introduction **1-1**
1.1 Purpose of this Volume 1-1
1.2 Content and Organization of this Volume 1-1
1.3 How to Use this Volume 1-2
1.4 Runoff Treatment Facilities 1-2
1.4.1 General Considerations 1-2
1.4.2 Maintenance 1-2
1.4.3 Treatment Methods 1-2

Chapter 2. - Treatment Facility Selection Process **2-1**
2.1 Step-by-Step Selection Process for Treatment Facilities 2-1
2.2 Other Treatment Facility Selection Factors 2-9

Chapter 3. - Treatment Facility Menus **3-1**
3.1 Guide to Applying Menus 3-1
3.2 Oil Control Menu 3-2
3.3 Phosphorus Treatment Menu 3-3
3.4 Enhanced Treatment Menu 3-5
3.5 Basic Treatment Menu 3-7

Chapter 4. - General Requirements for Stormwater Facilities **4-1**
4.1 Design Volume and Flow 4-1
4.1.1 Water Quality Design Storm Volume 4-1
4.1.2 Water Quality Design Flow Rate 4-1
4.1.3 Flows Requiring Treatment 4-2
4.1.4 Minimum Treatment Facility Size 4-4
4.2 Sequence of Facilities 4-4
4.3 Setbacks, Slopes, and Embankments 4-7
4.3.1 Setbacks 4-7
4.3.2 Side Slopes and Embankments 4-7
4.4 Facility Liners 4-8
4.4.1 General Design Criteria 4-8
4.4.2 Design Criteria for Treatment Liners 4-10
4.4.3 Design Criteria for Low Permeability Liner Options 4-10
4.5 Hydraulic Structures 4-12
4.5.1 Flow Splitter Designs 4-12
4.5.2 Flow Spreading Options 4-17
4.5.3 Outfall Systems 4-24
4.6 Maintenance Standards for Drainage Facilities 4-32

Chapter 5. - On-Site Stormwater Management **5-1**
5.1 Purpose 5-1
5.2 Application 5-1

5.3 Best Management Practices for On-Site Stormwater Management 5-1
5.3.1 On-site Stormwater Management BMPs 5-2
BMP T5.10A: Downspout Full Infiltration 5-3
BMP T5.10B: Downspout Dispersion Systems 5-3
BMP T5.10C: Perforated Stub-out Connections 5-3
BMP T5.11: Concentrated Flow Dispersion 5-3
BMP T5.12: Sheet Flow Dispersion 5-7
BMP T5.13: Post-Construction Soil Quality and Depth 5-9
BMP T5.14A: Rain Gardens 5-13
BMP T5.14B: Bioretention 5-14
BMP T5.15: Permeable Pavements 5-16
BMP T5.16: Tree Retention and Tree Planting 5-29
BMP T5.17: Vegetated Roofs 5-32
BMP T5.18: Reverse Slope Sidewalks 5-33
BMP T5.19: Minimal Excavation Foundations 5-33
BMP T5.20: Rainwater Harvesting 5-34
BMP T5.30: Full Dispersion 5-36
5.3.2 Site Design BMPs 5-46
BMP T5.40: Preserving Native Vegetation 5-46
BMP T5.41: Better Site Design 5-47

Chapter 6. - Pretreatment 6-1
6.1 Purpose 6-1
6.2 Application 6-1
6.3 Best Management Practices (BMPs) for Pretreatment 6-1
BMP T6.10: Presettling Basin 6-1

Chapter 7. - Infiltration and Bioretention Treatment Facilities 7-1
7.1 Purpose 7-1
7.2 General Considerations 7-1
7.3 Applications 7-1
7.4 Best Management Practices (BMPs) for Infiltration and Bioretention Treatment 7-2
BMP T7.10: Infiltration Basins 7-2
BMP T7.20: Infiltration Trenches 7-2
BMP T7.30: Bioretention Cells, Swales, and Planter Boxes 7-3
BMP T7.40: Compost-amended Vegetated Filter Strips (CAVFS) 7-28

Chapter 8. - Filtration Treatment Facilities 8-1
8.1 Purpose 8-1
8.2 Description 8-1
8.3 Performance Objectives 8-1
8.4 Applications and Limitations 8-2
8.5 Best Management Practices (BMPs) for Sand Filtration 8-2
BMP T8.10: Basic Sand Filter Basin 8-2
BMP T8.11: Large Sand Filter Basin 8-16
BMP T8.20: Sand Filter Vault 8-17
BMP T8.30: Linear Sand Filter 8-22

BMP T8.40: Media Filter Drain (previously referred to as the Ecology Embankment) .. 8-24

Chapter 9. - Biofiltration Treatment Facilities 9-1
9.1 Purpose 9-1
9.2 Applications 9-1
9.3 Site Suitability 9-1
9.4 Best Management Practices 9-1
BMP T9.10: Basic Biofiltration Swale 9-2
BMP T9.20: Wet Biofiltration Swale 9-21
BMP T9.30: Continuous Inflow Biofiltration Swale 9-24
BMP T9.40: Basic Filter Strip 9-25

Chapter 10. - Wetpool Facilities 10-1
10.1 Purpose 10-1
10.2 Application 10-1
10.3 Best Management Practices (BMPs) for Wetpool Facilities 10-1
BMP T10.10: Wetponds - Basic and Large 10-1
BMP T10.20: Wetvaults 10-18
BMP T10.30: Stormwater Treatment Wetlands 10-24
BMP T10.40: Combined Detention and Wetpool Facilities 10-31

Chapter 11. - Oil and Water Separators 11-1
11.1 Purpose of Oil and Water Separators 11-1
11.2 Description 11-1
11.3 Performance Objectives 11-5
11.4 Applications/Limitations 11-5
11.5 Site Suitability 11-6
11.6 Design Criteria-General Considerations 11-6
11.7 Oil and Water Separator BMPs 11-8
BMP T11.10: API (Baffle type) Separator Bay 11-8
BMP T11.11: Coalescing Plate (CP) Separator Bay 11-10

Chapter 12. - Emerging Technologies 12-1
12.1 Background 12-1
12.2 Ecology Role in Evaluating Emerging Technologies 12-1
12.3 Evaluation of Emerging Technologies 12-2
12.4 Assessing Levels of Development of Emerging Technologies 12-2
12.5 Emerging Technologies for Stormwater Treatment and Control Options 12-3

Volume V References 1

Appendix V-A Basic Treatment Receiving Waters 1

Appendix V-B Recommended Modifications to ASTM D 2434 When Measuring Hydraulic Conductivity for Bioretention Soil Mixes 1

Appendix V-C Geotextile Specifications 1

Appendix V-D Turbulence and Short-Circuiting Factor 1

Appendix V-E Recommended Newly Planted Tree Species for Flow Control Credit 1

~~**Acknowledgments** ..... ii~~

~~**Chapter 1 - Introduction** ..... 1-1~~
~~1.1 Purpose of this Volume ..... 1-1~~
~~1.2 Content and Organization of this Volume ..... 1-1~~
~~1.3 How to Use this Volume ..... 1-2~~
~~1.4 Runoff Treatment Facilities ..... 1-2~~
~~1.4.1 General Considerations ..... 1-2~~
~~1.4.2 Maintenance ..... 1-2~~
~~1.4.3 Treatment Methods ..... 1-2~~

~~**Chapter 2 - Treatment Facility Selection Process** ..... 2-1~~
~~2.1 Step-by-Step Selection Process for Treatment Facilities ..... 2-1~~
~~2.2 Other Treatment Facility Selection Factors ..... 2-9~~

~~**Chapter 3 - Treatment Facility Menus** ..... 3-1~~
~~3.1 Guide to Applying Menus ..... 3-1~~
~~3.2 Oil Control Menu ..... 3-2~~
~~3.3 Phosphorus Treatment Menu ..... 3-3~~
~~3.4 Enhanced Treatment Menu ..... 3-5~~
~~3.5 Basic Treatment Menu ..... 3-7~~

~~**Chapter 4 - General Requirements for Stormwater Facilities** ..... 4-1~~
~~4.1 Design Volume and Flow ..... 4-1~~
~~4.1.1 Water Quality Design Storm Volume ..... 4-1~~
~~4.1.2 Water Quality Design Flow Rate ..... 4-1~~
~~4.1.3 Flows Requiring Treatment ..... 4-2~~
~~4.2 Sequence of Facilities ..... 4-4~~
~~4.3 Setbacks, Slopes, and Embankments ..... 4-7~~
~~4.3.1 Setbacks ..... 4-7~~
~~4.3.2 Side Slopes and Embankments ..... 4-7~~
~~4.4 Facility Liners ..... 4-8~~
~~4.4.1 General Design Criteria ..... 4-8~~
~~4.4.2 Design Criteria for Treatment Liners ..... 4-10~~
~~4.4.3 Design Criteria for Low Permeability Liner Options ..... 4-10~~
~~4.5 Hydraulic Structures ..... 4-12~~
~~4.5.1 Flow Splitter Designs ..... 4-12~~
~~4.5.2 Flow Spreading Options ..... 4-17~~
~~4.5.3 Outfall Systems ..... 4-24~~
~~4.6 Maintenance Standards for Drainage Facilities ..... 4-32~~

~~**Chapter 5 - On-Site Stormwater Management** ..... 5-1~~
~~5.1 Purpose ..... 5-1~~

~~5.2 Application ..... 5-1~~
~~5.3 Best Management Practices for On-Site Stormwater Management ..... 5-1~~
~~5.3.1 On-site Stormwater Management BMPs ..... 5-2~~
~~BMP T5.10A: Downspout Full Infiltration ..... 5-3~~
~~BMP T5.10B: Downspout Dispersion Systems ..... 5-3~~
~~BMP T5.10C: Perforated Stub-out Connections ..... 5-3~~
~~BMP T5.11: Concentrated Flow Dispersion ..... 5-3~~
~~BMP T5.12: Sheet Flow Dispersion ..... 5-7~~
~~BMP T5.13: Post-Construction Soil Quality and Depth ..... 5-9~~
~~BMP T5.14A: Rain Gardens ..... 5-13~~
~~BMP T5.14B: Bioretention ..... 5-14~~
~~BMP T5.15: Permeable Pavements ..... 5-15~~
~~BMP T5.16: Tree Retention and Tree Planting ..... 5-28~~
~~BMP T5.17: Vegetated Roofs ..... 5-31~~
~~BMP T5.18: Reverse Slope Sidewalks ..... 5-32~~
~~BMP T5.19: Minimal Excavation Foundations ..... 5-32~~
~~BMP T5.20: Rainwater Harvesting ..... 5-33~~
~~BMP T5.30: Full Dispersion ..... 5-35~~
~~5.3.2 Site Design BMPs ..... 5-45~~
~~BMP T5.40: Preserving Native Vegetation ..... 5-45~~
~~BMP T5.41: Better Site Design ..... 5-46~~

~~**Chapter 6 - Pretreatment ..... 6-1**~~
~~6.1 Purpose ..... 6-1~~
~~6.2 Application ..... 6-1~~
~~6.3 Best Management Practices (BMPs) for Pretreatment ..... 6-1~~
~~BMP T6.10: Presettling Basin ..... 6-1~~

~~**Chapter 7 - Infiltration and BioRetention Treatment Facilities ..... 7-1**~~
~~7.1 Purpose ..... 7-1~~
~~7.2 General Considerations ..... 7-1~~
~~7.3 Applications ..... 7-1~~
~~7.4 Best Management Practices (BMPs) for Infiltration and Bioretention Treatment ..... 7-2~~
~~BMP T7.10: Infiltration Basins ..... 7-2~~
~~BMP T7.20: Infiltration Trenches ..... 7-2~~
~~BMP T7.30: Bioretention Cells, Swales, and Planter Boxes ..... 7-3~~
~~BMP T7.40: Compost-amended Vegetated Filter Strips (CAVFS) ..... 7-28~~

~~**Chapter 8 - Filtration Treatment Facilities ..... 8-1**~~
~~8.1 Purpose ..... 8-1~~
~~8.2 Description ..... 8-1~~
~~8.3 Performance Objectives ..... 8-1~~
~~8.4 Applications and Limitations ..... 8-2~~
~~8.5 Best Management Practices (BMPs) for Sand Filtration ..... 8-2~~
~~BMP T8.10: Basic Sand Filter Basin ..... 8-2~~
~~BMP T8.11: Large Sand Filter Basin ..... 8-16~~
~~BMP T8.20: Sand Filter Vault ..... 8-17~~

~~BMP T8.30: Linear Sand Filter ..... 8-22~~
~~BMP T8.40: Media Filter Drain (previously referred to as the Ecology Embankment) .. 8-24~~

~~**Chapter 9 - Biofiltration Treatment Facilities ..... 9-1**~~
~~9.1 Purpose ..... 9-1~~
~~9.2 Applications ..... 9-1~~
~~9.3 Site Suitability ..... 9-1~~
~~9.4 Best Management Practices ..... 9-1~~
~~BMP T9.10: Basic Biofiltration Swale ..... 9-2~~
~~BMP T9.20: Wet Biofiltration Swale ..... 9-21~~
~~BMP T9.30: Continuous Inflow Biofiltration Swale ..... 9-24~~
~~BMP T9.40: Basic Filter Strip ..... 9-25~~

~~**Chapter 10 - Wetpool Facilities ..... 10-1**~~
~~10.1 Purpose ..... 10-1~~
~~10.2 Application ..... 10-1~~
~~10.3 Best Management Practices (BMPs) for Wetpool Facilities ..... 10-1~~
~~BMP T10.10: Wetponds - Basic and Large ..... 10-1~~
~~BMP T10.20: Wetvaults ..... 10-18~~
~~BMP T10.30: Stormwater Treatment Wetlands ..... 10-24~~
~~BMP T10.40: Combined Detention and Wetpool Facilities ..... 10-31~~

~~**Chapter 11 - Oil and Water Separators ..... 11-1**~~
~~11.1 Purpose of Oil and Water Separators ..... 11-1~~
~~11.2 Description ..... 11-1~~
~~11.3 Performance Objectives ..... 11-5~~
~~11.4 Applications/Limitations ..... 11-5~~
~~11.5 Site Suitability ..... 11-6~~
~~11.6 Design Criteria-General Considerations ..... 11-6~~
~~11.7 Oil and Water Separator BMPs ..... 11-8~~
~~BMP T11.10: API (Baffle type) Separator Bay ..... 11-8~~
~~BMP T11.11: Coalescing Plate (CP) Separator Bay ..... 11-10~~

~~**Chapter 12 - Emerging Technologies ..... 12-1**~~
~~12.1 Background ..... 12-1~~
~~12.2 Ecology Role in Evaluating Emerging Technologies ..... 12-1~~
~~12.3 Evaluation of Emerging Technologies ..... 12-2~~
~~12.4 Assessing Levels of Development of Emerging Technologies ..... 12-2~~
~~12.5 Emerging Technologies for Stormwater Treatment and Control Options ..... 12-3~~

~~**Volume V - References ..... Ref-1**~~

~~**Appendix V-A - Basic Treatment Receiving Waters ..... A-1**~~

~~**Appendix V-B - Recommended Modifications to ASTM D 2434 When Measuring Hydraulic Conductivity for Bioretention Soil Mixes ..... B-1**~~

~~**Appendix V-C - Geotextile Specifications ..... C-1**~~

~~**Appendix V-D - Turbulence and Short-Circuiting Factor ..... D-1**~~

~~**Appendix V-E - Recommended Newly Planted Tree Species for Flow Control Credit ..... E-1**~~

List of Tables

Table 2.2.1 Screening Treatment Facilities Based on Soil Type 2-11

Table 3.3.1 Treatment Trains for Phosphorus Removal 3-4

Table 3.4.1 Treatment Trains for Dissolved Metals Removal 3-7

Table 4.2.1 Treatment Facility Placement in Relation to Detention 4-6

Table 4.4.1 Lining Types Recommended for Runoff Treatment Facilities 4-9

Table 4.4.2 Compacted Till Liners 4-11

Table 4.5.1 Rock Protection at Outfalls 4-18

Table 4.5.2 Maintenance Standards 4-32

Table 7.4.1 General Guideline for Mineral Aggregate Gradation 7-16

Table 8.5.1 Sand Medium Specification 8-6

Table 8.5.2 Clay Liner Specifications 8-6

Table 8.5.3 Western Washington Design Widths for Media Filter Drains 8-34

Table 8.5.4 Media filter drain mix 8-38

Table 9.4.1 Sizing Criteria 9-4

Table 9.4.2 Guide for Selecting Degree of Retardance 9-11

Table 9.4.3 Grass Seed Mixes Suitable for Biofiltration Swale Treatment Areas 9-18

Table 9.4.4 Groundcovers And Grasses Suitable for the Upper Side Slopes of a Biofiltration Swale in Western Washington 9-18

Table 9.4.5 Recommended Plants for Wet Biofiltration Swale 9-23

Table 10.3.1 Emergent Wetland Plant Species Recommended for Wetponds 10-13

Table 10.3.2 Distribution of Depths in Wetland Cell 10-27

Table 12.5.1 TAPE Treatment Goals and Water Quality Parameters 12-6

Table C.1 Geotextile Properties for Underground Drainage 1

Table C.2 Geotextile for Underground Drainage Filtration Properties 2

Table C.3 Geotextile Strength Properties for Impermeable Liner Protection..... 2
~~**Table 2.2.1 Screening Treatment Facilities Based on Soil Type**..... 2-11~~
~~**Table 3.3.1 Treatment Trains for Phosphorus Removal**..... 3-4~~
~~**Table 3.4.1 Treatment Trains for Dissolved Metals Removal**..... 3-7~~
~~**Table 4.2.1 Treatment Facility Placement in Relation to Detention**..... 4-6~~
~~**Table 4.4.1 Lining Types Recommended for Runoff Treatment Facilities**..... 4-9~~
~~**Table 4.4.2 Compacted Till Liners**..... 4-11~~
~~**Table 4.5.1 Rock Protection at Outfalls**..... 4-18~~
~~**Table 4.5.2 Maintenance Standards**..... 4-32~~
~~**Table 5.3.2. Flow Control Credits for Newly Planted Trees.**..... 5-30~~
~~**Table 7.4.1 General Guideline for Mineral Aggregate Gradation**..... 7-16~~
~~**Table 8.5.1 Sand Medium Specification**..... 8-6~~
~~**Table 8.5.2 Clay Liner Specifications**..... 8-6~~
~~**Table 8.5.3 Western Washington Design Widths for Media Filter Drains**..... 8-33~~
~~**Table 8.5.4 Media filter drain mix**..... 8-37~~
~~**Table 9.4.1 Sizing Criteria**..... 9-4~~
~~**Table 9.4.2 Guide for Selecting Degree of Retardance**..... 9-11~~
~~**Table 9.4.3 Grass Seed Mixes Suitable for Biofiltration Swale Treatment Areas**..... 9-18~~
~~**Table 9.4.4 Groundcovers And Grasses Suitable for the Upper Side Slopes of a Biofiltration Swale in Western Washington**..... 9-18~~
~~**Table 9.4.5 Recommended Plants for Wet Biofiltration Swale**..... 9-23~~
~~**Table 10.3.1 Emergent Wetland Plant Species Recommended for Wetponds**..... 10-13~~
~~**Table 10.3.2 Distribution of Depths in Wetland Cell**..... 10-27~~
~~**Table 12.5.1 TAPE Treatment Goals and Water Quality Parameters**..... 12-6~~
~~**Table C.1 Geotextile Properties for Underground Drainage**..... C-1~~
~~**Table C.-2 Geotextile for Underground Drainage Filtration Properties**..... C-2~~
~~**Table C.-3 Geotextile Strength Properties for Impermeable Liner Protection**..... C-2~~

List of Figures

Figure 2.1.1 – Treatment Facility Selection Flow Chart 2-3
Figure 4.5.1 – Flow Splitter, Option A 4-15
Figure 4.5.2 – Flow Splitter, Option B 4-16
Figure 4.5.3 – Flow Spreader Option A: Anchored Plate..... 4-20
Figure 4.5.4 – Flow Spreader Option B: Concrete Sump Box 4-21
Figure 4.5.5 – Flow Spreader Option C: Notched Curb Spreader..... 4-22
Figure 4.5.6 – Flow Spreader Option D: Through-Curb Port..... 4-23
Figure 4.5.7 – Pipe/Culvert Outfall Discharge Protection..... 4-26
Figure 4.5.8 – Flow Dispersal Trench 4-27
Figure 4.5.9 – Alternative Flow Dispersal Trench 4-28
Figure 4.5.10 – Gabion Outfall Detail 4-29
Figure 4.5.11 – Diffuser TEE (an example of energy dissipating end feature)..... 4-30
Figure 4.5.12 – Fish Habitat Improvement at New Outfalls..... 4-31

Figure 5.3.1 – Typical Concentrated Flow Dispersion for Steep Driveways 5-6
Figure 5.3.2 – Sheet Flow Dispersion for Driveways 5-8
Figure 5.3.3 – Planting bed Cross-Section 5-12
Figure 7.4.1 Example of a Bioretention Swale 7-4
Figure 7.4.2 Example of a Bioretention Planter 7-5
Figure 7.4.3 – Example of a Compost Amended Vegetated Filter Strip (CAVFS) 7-29
Figure 8.5.1 – Sand Filtration Basin Preceded by Presettling Basin (Variation of a Basic Sand Filter) 8-9
Figure 8.5.2 – Sand Filter with Pretreatment Cell 8-10
Figure 8.5.3 – Sand Filter with Level Spreader 8-12
Figure 8.5.4a – Flow Splitter Option A 8-14
Figure 8.5.4b – Flow Splitter Option B 8-15
Figure 8.5.5 – Example Isolation/Diversion Structure 8-19
Figure 8.5.6a – Sand Filter Vault 8-20
Figure 8.5.6b – Sand Filter Vault (cont) 8-21
Figure 8.5.7 – Linear Sand Filter 8-23
Figure 8.5.8 – Media filter drain: Cross section 8-25
Figure 8.5.9 – Dual media filter drain: Cross section 8-26
Figure 8.5.10 – Media filter drain without underdrain trench 8-27
Figure 9.4.1 – Typical Swale Section 9-2
Figure 9.4.2 – Biofiltration Swale Underdrain Detail 9-5
Figure 9.4.3 – Biofiltration Swale Low-Flow Drain Detail 9-5
Figure 9.4.4 – Swale Dividing Berm 9-6
Figure 9.4.5 – Geometric Formulas for Common Swale Shapes 9-8
Figure 9.4.6a – Ratio of SBUH Peak/WQ Flow 9-10
Figure 9.4.6b – Ratio of SBUH Peak/WQ Flow 9-10
Figure 9.4.7 – The Relationship of Manning's n with VR for Various Degrees of Flow Retardance (A-E) 9-12
Figure 9.4.8 – Biofiltration Swale Access Features 9-20
Figure 9.4.9 – Typical Filter Strip 9-25
Figure 10.3.1a – Wetpond 10-2
Figure 10.3.1b – Wetpond 10-3
Figure 10.3.2 – Headwater Depth for Smooth Interior Pipe Culverts with Inlet Control 10-14
Figure 10.3.3 – Headwater Depth for Corrugated Pipe Culverts with Inlet Control 10-15
Figure 10.3.4 – Critical Depth of Flow for Circular Culverts 10-16
Figure 10.3.5 – Circular Channel Ratios 10-17
Figure 10.3.6 – Wetvault 10-19
Figure 10.3.7 – Stormwater Wetland — Option One 10-27
Figure 10.3.8 – Stormwater Wetland — Option Two 10-28
Figure 10.3.9 – Combined Detention and Wetpond 10-33
Figure 10.3.10 – Combined Detention and Wetpond (Continued) 10-34

Figure 10.3.11 – Alternative Configurations of Detention and Wetpool Areas 10-35
Figure 11.2.1 – API (Baffle Type) Separator 11-2
Figure 11.2.2 – Coalescing Plate Separator 11-3
Figure 11.2.3 – Spill Control Separator (not for oil treatment) 11-4
Figure D.1 – Recommended Values of *F* for Various Values of v_H/Vt 1
~~Figure 2.1.1 – Treatment Facility Selection Flow Chart ..... 2-3~~
~~Figure 4.5.1 – Flow Splitter, Option A ..... 4-15~~
~~Figure 4.5.2 – Flow Splitter, Option B ..... 4-16~~
~~Figure 4.5.3 – Flow Spreader Option A: Anchored Plate ..... 4-20~~
~~Figure 4.5.4 – Flow Spreader Option B: Concrete Sump Box ..... 4-21~~
~~Figure 4.5.5 – Flow Spreader Option C: Notched Curb Spreader ..... 4-22~~
~~Figure 4.5.6 – Flow Spreader Option D: Through-Curb Port ..... 4-23~~
~~Figure 4.5.7 – Pipe/Culvert Outfall Discharge Protection ..... 4-26~~
~~Figure 4.5.8 – Flow Dispersal Trench ..... 4-27~~
~~Figure 4.5.9 – Alternative Flow Dispersal Trench ..... 4-28~~
~~Figure 4.5.10 – Gabion Outfall Detail ..... 4-29~~
~~Figure 4.5.11 – Diffuser TEE (an example of energy dissipating end feature) ..... 4-30~~
~~Figure 4.5.12 – Fish Habitat Improvement at New Outfalls ..... 4-31~~
~~Figure 5.3.1 – Typical Concentrated Flow Dispersion for Steep Driveways ..... 5-6~~
~~Figure 5.3.2 – Sheet Flow Dispersion for Driveways ..... 5-8~~
~~Figure 5.3.3 – Planting bed Cross-Section ..... 5-12~~
~~Figure 7.4.1 Example of a Bioretention Swale ..... 7-4~~
~~Figure 7.4.2 Example of a Bioretention Planter ..... 7-5~~
~~Figure 7.4.3 – Example of a Compost Amended Vegetated Filter Strip (CAVFS) ..... 7-29~~
~~Figure 8.5.1 – Sand Filtration Basin Preceded by Presettling Basin (Variation of a Basic Sand Filter) ..... 8-9~~
~~Figure 8.5.2 – Sand Filter with Pretreatment Cell ..... 8-10~~
~~Figure 8.5.3 – Sand Filter with Level Spreader ..... 8-12~~
~~Figure 8.5.4a – Flow Splitter Option A ..... 8-14~~
~~Figure 8.5.4b – Flow Splitter Option B ..... 8-15~~
~~Figure 8.5.5 – Example Isolation/Diversion Structure ..... 8-19~~
~~Figure 8.5.6a – Sand Filter Vault ..... 8-20~~
~~Figure 8.5.6b – Sand Filter Vault (cont) ..... 8-21~~
~~Figure 8.5.7 – Linear Sand Filter ..... 8-23~~
~~Figure 8.5.8 – Media filter drain: Cross section ..... 8-25~~
~~Figure 8.5.9 – Dual media filter drain: Cross section ..... 8-26~~
~~Figure 8.5.10 – Media filter drain without underdrain trench ..... 8-27~~
~~Figure 9.4.1 – Typical Swale Section ..... 9-2~~
~~Figure 9.4.2 – Biofiltration Swale Underdrain Detail ..... 9-5~~
~~Figure 9.4.3 – Biofiltration Swale Low-Flow Drain Detail ..... 9-5~~
~~Figure 9.4.4 – Swale Dividing Berm ..... 9-6~~

~~Figure 9.4.5 – Geometric Formulas for Common Swale Shapes ..... 9-8~~
~~Figure 9.4.6a – Ratio of SBUH Peak/WQ Flow ..... 9-10~~
~~Figure 9.4.6b – Ratio of SBUH Peak/WQ Flow ..... 9-10~~
~~Figure 9.4.7 – The Relationship of Manning's n with VR for Various Degrees of Flow Retardance (A-E) ..... 9-12~~
~~Figure 9.4.8 – Biofiltration Swale Access Features ..... 9-20~~
~~Figure 9.4.9 – Typical Filter Strip ..... 9-25~~
~~Figure 10.3.1a – Wetpond ..... 10-2~~
~~Figure 10.3.1b – Wetpond ..... 10-3~~
~~Figure 10.3.2 – Headwater Depth for Smooth Interior Pipe Culverts with Inlet Control ..... 10-14~~
~~Figure 10.3.3 – Headwater Depth for Corrugated Pipe Culverts with Inlet Control ..... 10-15~~
~~Figure 10.3.4 – Critical Depth of Flow for Circular Culverts ..... 10-16~~
~~Figure 10.3.5 – Circular Channel Ratios ..... 10-17~~
~~Figure 10.3.6 – Wetvault ..... 10-19~~
~~Figure 10.3.7 – Stormwater Wetland – Option One ..... 10-27~~
~~Figure 10.3.8 – Stormwater Wetland – Option Two ..... 10-28~~
~~Figure 10.3.9 – Combined Detention and Wetpond ..... 10-33~~
~~Figure 10.3.10 – Combined Detention and Wetpond (Continued) ..... 10-34~~
~~Figure 10.3.11 – Alternative Configurations of Detention and Wetpool Areas ..... 10-35~~
~~Figure 11.2.1 – API (Baffle Type) Separator ..... 11-2~~
~~Figure 11.2.2 – Coalescing Plate Separator ..... 11-3~~
~~Figure 11.2.3 – Spill Control Separator (not for oil treatment) ..... 11-4~~
~~Figure D.1 – Recommended Values of F for Various Values of vH/Vt ..... D-1~~

Chapter 1. - Introduction

1.1 Purpose of this Volume

Best Management Practices (BMPs) are schedules of activities, prohibitions of practices, maintenance procedures, managerial practices, or structural features that prevent or reduce adverse impacts to waters of Washington State. As described in Volume I of this stormwater manual, there are three main categories of BMPs for long-term management of stormwater at developed sites:

- BMPs addressing the amount and timing of stormwater flows;
- BMPs addressing prevention of pollution from potential sources; and
- BMPs addressing treatment of runoff to remove sediment and other pollutants.

This volume of the stormwater manual focuses on the third category, treatment of runoff to remove sediment and other pollutants at developed sites. The purpose of this volume is to provide guidance for selection, design, and maintenance of permanent runoff treatment facilities.

The Manual presents BMPs with respect to controlling stormwater flows and control of pollutant sources in Volumes III and IV, respectively.

1.2 Content and Organization of this Volume

Volume V of the stormwater manual contains 12 chapters. Chapter 1 serves as an introduction and summarizes available options for treatment of stormwater. Chapter 2 outlines a step-by-step process for selecting treatment facilities for new development and redevelopment projects. Chapter 3 presents treatment facility "menus" that are used in applying the step-by-step process presented in Chapter 2. These menus cover different treatment needs that are associated with different sites. Chapter 4 discusses general requirements for treatment facilities. Chapter 5 presents information regarding on-site stormwater management BMPs. The intent of these BMPs is to infiltrate, disperse, or contain runoff on site, as well as to provide treatment. Chapters 6 through 11 provide detailed information regarding specific types of treatment identified in the menus. Chapter 12 discusses special considerations for emerging technologies for stormwater treatment.

The Appendices to this volume contain more detailed information on selected topics described in the various chapters.

1.3 How to Use this Volume

The Reader should consult this volume to select specific BMPs for runoff treatment for the Stormwater Site Plans (see Volume I). After you have identified the Minimum Requirements from Volume I, you can use this volume to select specific treatment facilities for permanent use at developed sites, and as an aid in designing and constructing these facilities.

1.4 Runoff Treatment Facilities

1.4.1 General Considerations

Runoff treatment facilities are designed to remove pollutants contained in stormwater runoff. The pollutants of concern include sand, silt, and other suspended solids; metals such as copper, lead, and zinc; nutrients (e.g., nitrogen and phosphorous); certain bacteria and viruses; and organics such as petroleum hydrocarbons and pesticides. Methods of pollutant removal include sedimentation/settling, filtration, plant uptake, ion exchange, adsorption, and bacterial decomposition. Floatable pollutants such as oil, debris, and scum can be removed with separator structures.

1.4.2 Maintenance

Maintenance is required for all types of runoff treatment facilities. See Section 4.6 for maintenance standards for the treatment facilities discussed in this volume.

1.4.3 Treatment Methods

Methods used for runoff treatment facilities and common terms used in runoff treatment are discussed below:

- **Wetpools.** Wetpools provide runoff treatment by allowing settling of particulates during quiescent conditions (sedimentation), by biological uptake, and by vegetative filtration. Wetpools may be single-purpose facilities, providing only runoff treatment, or they may be combined with a detention pond or vault to also provide flow control. If combined, the wetpool facility can often be stacked under the detention facility with little further loss of development area.
- **Biofiltration.** Biofiltration uses vegetation in conjunction with slow and shallow-depth flow for runoff treatment. As runoff passes through the vegetation, pollutants are removed through the combined effects of filtration, infiltration, and settling. These effects are aided by the reduction of the velocity of stormwater as it passes through the biofilter. Biofiltration facilities include swales that are designed to convey and treat concentrated runoff at shallow depths and slow

velocities, and filter strips that are broad areas of vegetation for treating sheet flow runoff.

- **Oil/Water Separation.** Oil/water separators remove oil floating on the top of the water. There are two general types of separators - the American Petroleum Institute (API) separators and coalescing plate (CP) separators. Both use gravity to remove floating and dispersed oil. API separators, or baffle separators, are generally composed of three chambers separated by baffles. The efficiency of these separators is dependent on detention time in the center, or detention chamber, and on droplet size. CP separators use a series of parallel plates, which improve separation efficiency by providing more surface area, thus reducing the space needed for the separator. Oil/water separators must be located off-line from the primary conveyance/detention system, bypassing flows greater than the water quality design flow. Other devices/facilities that may be used for removal of oil include "emerging technologies" (see definition below), and linear sand filters. Oil control devices/facilities should be placed upstream of other treatment facilities and as close to the source of oil generation as possible.
- **Pretreatment.** Presettling basins are often used to remove sediment from runoff prior to discharge into other treatment facilities. Basic treatment facilities, listed in Step 6 – Figure 2.1.1, can also be used to provide pretreatment. Pretreatment often must be provided for filtration and infiltration facilities to protect them from clogging or to protect ground water. Appropriate pretreatment devices include a pre-settling basin, wet pond/vault, biofilter, constructed wetland, or oil/water separator. A number of patented technologies have received General and Conditional Use Level Designations for Pretreatment through Ecology's TAPE (Technology Assessment Protocol – Ecology) Program. A listing and descriptions are available at Ecology's Emerging Technologies website http://www.ecy.wa.gov/programs/wq/stormwater/newtech/index.html
- **Infiltration.** Infiltration refers to the use of the filtration, adsorption, and biological properties of native soils, with or without amendments, to remove pollutants as stormwater soaks into the ground. Infiltration can provide multiple benefits including pollutant removal, peak flow control, ground water recharge, and flood control. One condition that can limit the use of infiltration is the potential adverse impact on ground water quality. You must understand the difference between infiltrating in soils that are suitable for runoff treatment and soils only suitable for flow control to protect ground water. Sufficient organic content and sorption capacity to remove pollutants must be present for soils to provide runoff treatment. Examples of suitable soils are silty and sandy loams. Coarser soils, such as gravelly sands, can provide flow control but are not suitable for providing runoff treatment. The

use of coarser soils to provide flow control for runoff from pollutant generating surfaces must always be preceded by treatment to protect ground water quality. Thus, there will be instances when soils are suitable for treatment but not flow control, and vice versa.

- **Bioretention.** Bioretention refers to the use of imported soils as a treatment medium. As in infiltration, the pollutant removal mechanisms include filtration, adsorption, and biological action. Bioretention facilities can be built within earthen swales or placed within vaults. Water that has passed through the Bioretention Soil Mix (or approved equivalent) may be discharged to the ground or collected and discharged to surface water.
- **Filtration.** Another of a pollutant removal system for stormwater is the use of various media such as sand, perlite, zeolite, and carbon, to remove low levels of total suspended solids (TSS). Specific media such as activated carbon or zeolite can remove hydrocarbons and soluble metals. Filter systems can be configured as basins, vaults, trenches or cartridges. Several Sand Filtration BMPs are discussed in Chapter 9. A number of "Emerging Technologies" filtration devices have completed or are in the processed of being assessed through the "Emerging Technologies" processed described in the following bullet.
- **"Emerging Technologies."** Emerging technologies are those new stormwater treatment devices that are continually being added to the stormwater treatment marketplace. Ecology has established a program – Technology Assessment Protocol – Ecology (TAPE) - to evaluate the capabilities of these emerging technologies. Emerging technologies that have been evaluated by this program are approved at some level of use designation under specified conditions. Their use is restricted in accordance with their evaluation as explained in Chapter 12. The recommendations for use of these emerging technologies may change as we collect more data on their performance. Updated recommendations on their use are posted to the Ecology website. Emerging technologies can also be considered for retrofit situations where TAPE approval is not required.
- **"On-line" Systems.** Most treatment facilities can be designed as "On-line" systems with flows above the water quality design flow or volume simply passing through the facility with lesser or no pollutant removal efficiency. It is sometimes desirable to restrict flows to treatment facilities and bypass excess flows around them. These are called "Off-line" systems. An example of an on-line system is a wetpool that maintains a permanent pool of water for runoff treatment purposes.
- **Design Flow.** For information on determining the design storm and flows for sizing treatment facilities refer to Chapter 4 of this volume.

Chapter 2. - Treatment Facility Selection Process

This chapter describes a step-by-step process for selecting the type of treatment facilities that will apply to individual projects. Physical features of sites that are applicable to treatment facility selection are also discussed. Refer to Chapter 3 for additional detail on the four treatment menus - oil control treatment, phosphorous treatment, enhanced treatment, and basic treatment.

Section 12.5 includes links to menus for emerging technologies that have a Use-Level Designation for pretreatment, oil, phosphorous, enhanced, or basic treatment. Only technologies with a General Use-Level Designation (GULD) can have an unlimited number of installations.

2.1 Step-by-Step Selection Process for Treatment Facilities

Please refer to Figure 2.1.1. Use the step-by-step process outlined below to determine the type of treatment facilities applicable to the project.

Step 1: Determine the Receiving Waters and Pollutants of Concern Based on Off-Site Analysis

To obtain a more complete determination of the potential impacts of a stormwater discharge, Ecology encourages local governments to require an Off-site Analysis similar to that in Chapter 2 of Volume I (Vol. I Section 2.6.2). Even without an off-site analysis requirement, the project proponent must determine the natural receiving water for the stormwater drainage from the project site (ground water, wetland, lake, stream, or salt water). This is necessary to determine the applicable treatment menu from which to select treatment facilities. The identification of the receiving water should be verified by the local government agency with review responsibility. If the discharge is to the local municipal storm drainage system, the receiving water for the drainage system must be determined.

The local government should verify whether any type of water quality management plans and/or local ordinances or regulations have established specific requirements for that (those) receiving waters. Examples of plans to be aware of include:

- Watershed or Basin Plans: These can be developed to cover a wide variety of geographic scales (e.g., Water Resource Inventory Areas, or sub-basins of a few square miles), and can be focused solely on establishing stormwater requirements (e.g., “Stormwater Basin Plans”), or can address a number of pollution and water quantity issues, including urban stormwater (e.g., Puget Sound Non-Point Action Plans).
- Water Clean-up Plans: These plans establish a Total Maximum Daily Load (TMDL) of a pollutant or pollutants in a specific receiving water or basin, and to identify actions necessary to remain below that maximum loading. The plans may identify discharge limitations or management

limitations (e.g., use of specific treatment facilities) for stormwater discharges from new and redevelopment projects.

- Ground water Management Plans (Wellhead Protection Plans): To protect ground water quality and/or quantity, these plans may identify actions required of stormwater discharges.
- Lake Management Plans: These plans are developed to protect lakes from eutrophication due to inputs of phosphorus from the drainage basin. Control of phosphorus from new development is a likely requirement in any such plans.

An analysis of the proposed land use(s) of the project should also be used to determine the stormwater pollutants of concern. Table 2.2.1 lists the pollutants of concern from various land uses. Refer to this table for examples of treatment options after determining whether "basic," "enhanced," or "phosphorus" treatment requirements apply to the project. You make those decisions in the steps below.

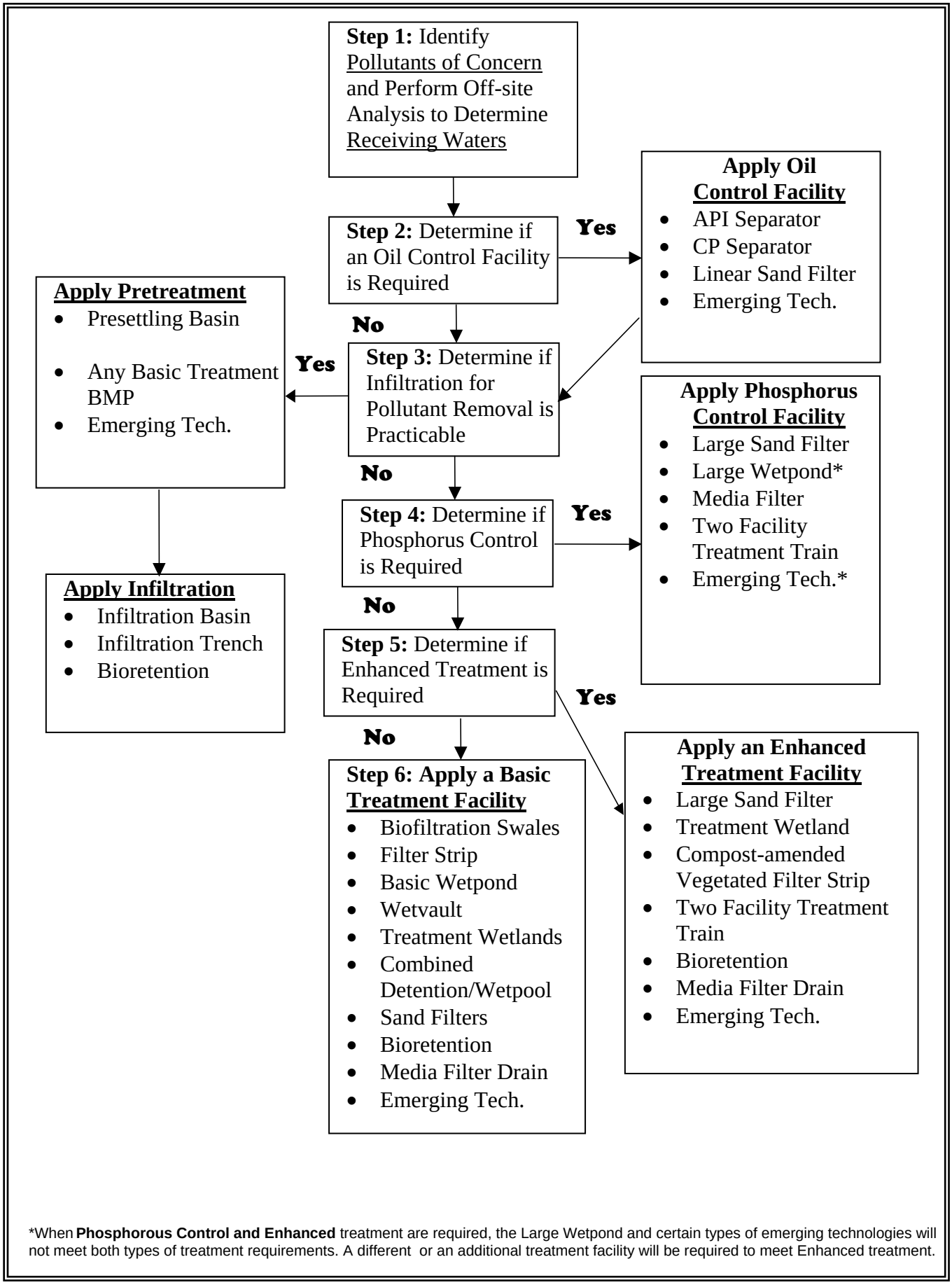

Figure 2.1.1 – Treatment Facility Selection Flow Chart

Step 2: Determine if an Oil Control Facility/Device is Required

The use of oil control devices and facilities is dependent upon the specific land use proposed for development.

Where Applied: The Oil Control Menu (see Section 3.2 for more details) applies to projects that have "high-use sites." High-use sites are those that typically generate high concentrations of oil due to high traffic turnover or the frequent transfer of oil. High-use sites include:

- An area of a commercial or industrial site subject to an expected average daily traffic (ADT) count equal to or greater than 100 vehicles per 1,000 square feet of gross building area.

  Note: Gasoline stations, with or without small food stores, will likely exceed the high-use site threshold.

- An area of a commercial or industrial site subject to petroleum storage and transfer in excess of 1,500 gallons per year, not including routinely delivered heating oil. Some examples are discussed below.

  Note: The petroleum storage and transfer criterion is intended to address regular transfer operations such as gasoline service stations, not occasional filling of heating oil tanks.

- An area of a commercial or industrial site subject to parking, storage or maintenance of 25 or more vehicles that are over 10 tons gross weight (trucks, buses, trains, heavy equipment, etc.). Some examples are discussed below.

  Note: In general, all-day parking areas are not intended to be defined as **high-use sites**, and should not require an oil control facility.

- A road intersection with a measured average daily traffic (ADT) count of 25,000 vehicles or more on the main roadway and 15,000 vehicles or more on any intersecting roadway, excluding projects proposing primarily pedestrian or bicycle use improvements.

  Note: The traffic count can be estimated using information from "Trip Generation," published by the Institute of Transportation Engineers, or from a traffic study prepared by a professional engineer or transportation specialist with experience in traffic estimation. See: http://www.ite.org/.

- The following land uses may have areas that fall within the definition of "high-use sites" and require oil control treatment. Further, these sites require special attention to the oil control treatment selected. Refer to Section 3.2 for more details.

  - Industrial machinery and equipment, and railroad equipment maintenance areas
  - Log storage and sorting yards

- Aircraft maintenance areas
- Railroad yards
- Fueling stations
- Vehicle maintenance and repair sites
- Construction businesses (paving, heavy equipment storage and maintenance, storage of petroleum products.)

  Note: Some land use types require the use of a spill control (SC-type) oil/water separator. Those situations are described in Volume IV and are separate from this treatment requirement.

If oil control is required for the site, please refer to the General Requirements in Chapter 4. The general requirements may affect the design and placement of facilities on the site (e.g., flow splitting). Then see Chapter 11 of this volume for guidance on the proper selection of options and design details.

If an Oil Control Facility is required, select and apply an appropriate Oil Control Facility. Please refer to the Oil Control Menu in Section 3.2. After selecting an Oil Control Facility, proceed to Step 3.

If an Oil Control Facility is not required, proceed directly to Step 3.

Step 3: Determine if Infiltration for Pollutant Removal is Practicable

Please check the infiltration treatment design criteria as discussed in the Site Suitability Criteria (SSC) in Section 3.3.7 of Volume III.

Infiltration can be effective at treating stormwater runoff, but soil properties must be appropriate to achieve effective treatment. This effectiveness is discussed in *SSC-6 Soil Physical and Chemical Suitability for Treatment.*

The infiltration facility must also be checked to ensure that it does not adversely impact ground water resources. These are discussed in:

- *SSC-2 Ground Water Protection Areas*
- *SSC-5 Depth to Bedrock, Water Table, or Impermeable Layer*
- *SSC-1 Setback Criteria.*

These suitability criteria check the location and depth to bedrock, the water table, or impermeable layers (such as glacial till), and the proximity to wells, foundations, septic tank drainfields.

Unstable slopes can preclude the use of infiltration (discussed in *SSC-7 Seepage Analysis and Control*).

Infiltration treatment facilities must be preceded by a pretreatment facility, such as a presettling basin or vault, to reduce the occurrence of plugging. . Any of the basic treatment facilities, and detention ponds designed to meet flow control requirements, can also be used for pre-treatment. If an oil/water separator is necessary for oil control, it can also function as the pre-settling basin as long as the influent suspended solids concentrations are not high. However, frequent inspections are necessary to determine when accumulated solids exceed the 6-inch depth at which clean-out is recommended (See Chapter 4).

If infiltration is planned, please refer to the General Requirements in Chapter 4. They can affect the design and placement of facilities on your site.

Infiltration through soils that do not meet the site suitability criteria SSC-6 in Section 3.3.7 of Volume III is allowable as a flow control BMP. Use of infiltration through such soils is acceptable provided:

- The flow control only infiltration facility is NOT within a ¼ mile of a phosphorus-sensitive receiving water.

  Note: When the flow control only infiltration facility IS within ¼ mile of a phosphorous-sensitive water body, phosphorous treatment is required. Refer to the phosphorous treatment menu in Section 3.3 for the special treatment needed prior to infiltration.

- The flow control only infiltration facility is NOT within ¼ mile of a fresh water body designated for aquatic life use or that has an existing aquatic life use.

  Note: When the flow control only infiltration facility IS within a ¼ mile of such a fresh water body, enhanced treatment is required for land use tupes described in Step 5 below. Refer to Section 3.4 Enhanced Treatment Menu for the treatment options.

- The appropriate level of treatment for the land use precedes the infiltration. Refer to Section 3.4 Enhanced Treatment Menu or Section 3.5 Basic Treatment Menu for the treatment needed prior to infiltration.

Infiltration can also be used as part of other treatments and flow control measures. For example, infiltration through the bottom of a detention/retention facility for flow control can also help reduce direct discharge volumes to streams and reduce the size of the facility.

If infiltration is practicable, select and apply pretreatment and an infiltration facility.

If infiltration is not practicable, proceed to Step 4.

Step 4: Determine if Control of Phosphorous is Required

The plans, ordinances, and regulations identified in Step 1 are a good reference to help determine if the subject site is in an area where phosphorous control is required.

The requirement to provide phosphorous control is determined by the local government with jurisdiction, the Department of Ecology, or the USEPA. The local government may have developed a management plan and implementing ordinances or regulations for control of phosphorus from new development and redevelopment for the receiving water(s) of the stormwater drainage. The local government can use the following sources of information for pursuing plans and implementing ordinances and/or regulations:

- Those waterbodies reported under section 305(b) of the Clean Water Act, and designated as not supporting beneficial uses due to phosphorous;
- Those listed in Washington State's Nonpoint Source Assessment required under section 319(a) of the Clean Water Act due to nutrients.

If phosphorus control is required, select and apply a phosphorous treatment facility. Please refer to the Phosphorus Treatment Menu in Section 3.3. Select an option from the menu after reviewing the applicability and limitations, site suitability, and design criteria of each for compatibility with the site. If you have selected a phosphorus treatment facility, please refer to the General Requirements in Chapter 4. They may affect the design and placement of the facility on the site.

Note: Project sites subject to the Phosphorus Treatment requirement could also be subject to the Enhanced Treatment requirement (see Step 5). In that event, apply a facility or a treatment train that is listed in both the Enhanced Treatment Menu and the Phosphorus Treatment Menu.

If phosphorus treatment is not required for the site, proceed to Step 5.

Step 5: Determine if Enhanced Treatment is Required

Except where specified under Step 6, Enhanced treatment for reduction in dissolved metals is required for the following project sites that: 1) discharge directly to fresh waters or conveyance systems tributary to fresh waters designated for aquatic life use or that have an existing aquatic life use; or 2) use infiltration strictly for flow control – not treatment – and the discharge is within ¼ mile of a fresh water designated for aquatic life use or that has an existing aquatic life use:

Industrial project sites,

Commercial project sites,

Multi-family residential project sites, and

High AADT roads as follows:

Within Urban Growth ~~Management~~ Areas:

- Fully controlled and partially controlled limited access highways with Annual Average Daily Traffic (AADT) counts of 15,000 or more
- All other roads with an AADT of 7,500 or greater

Outside of Urban Growth ~~Management~~ Areas:

- Roads with an AADT of 15,000 or greater unless discharging to a 4th Strahler order stream or larger;
- Roads with an AADT of 30,000 or greater if discharging to a 4th Strahler order stream or larger (as determined using 1:24,000 scale maps to delineate stream order).

Any areas of the above-listed project sites that are identified as subject to Basic Treatment requirements (see Step 6) are not also subject to Enhanced Treatment requirements. For developments with a mix of land use types, the Enhanced Treatment requirement shall apply when the runoff from the areas subject to the Enhanced Treatment requirement comprises 50% or more of the total runoff within a threshold discharge area.

If the project must apply Enhanced Treatment, select and apply an appropriate Enhanced Treatment facility. Please refer to the Enhanced Treatment Menu in Section 3.4. Select an option from the menu after reviewing the applicability and limitations, site suitability, and design criteria of each for compatibility with the site. Note: Project sites subject to the Enhanced Treatment requirement could also be subject to a phosphorus removal requirement if located in an area designated for phosphorus control. In that event, apply a facility or a treatment train that is listed in both the Enhanced Treatment Menu and the Phosphorus Treatment Menu. If you have selected an Enhanced Treatment facility, please refer to the General Requirements in Chapter 4. They may affect the design and placement of the facility on the site.

If Enhanced Treatment does not apply to the site, please proceed to Step 6.

Step 6: Select a Basic Treatment Facility

The Basic Treatment Menu is required in the following circumstances:

- Project sites that discharge to the ground (see Step 3), UNLESS:
  - The soil suitability criteria for infiltration treatment are met (see Chapter 3 of Volume III), and alternative pretreatment is provided (See Chapter 6), or

- The project site uses infiltration strictly for flow control – not treatment - and the discharge is within ¼-mile of a phosphorus sensitive lake (use the Phosphorus Treatment Menu), or
- The project site is industrial, commercial, multi-family or a high AADT (consistent with the Enhanced Treatment-type thresholds listed above) and is within ¼ mile of a fresh water designated for aquatic life use or that has an existing aquatic life use. (use the Enhanced Treatment Menu).

- Residential projects not otherwise needing phosphorus control in Step 4 as designated by USEPA, the Department of Ecology, or a local government.
- Project sites discharging directly (or indirectly through a municipal separate storm sewer system) to Basic Treatment Receiving Waters listed in Appendix I-C of Volume I.
- Project sites that drain to fresh water that is not designated for aquatic life use, and does not have an existing aquatic life use; and project sites that drain to waters not tributary to waters designated for aquatic life use or that have an existing aquatic life use.
- Landscaped areas of industrial, commercial, and multi-family project sites, and parking lots of industrial and commercial project sites, dedicated solely to parking of employees' private vehicles that do not involve any other pollution-generating sources (e.g., industrial activities, customer parking, storage of erodible or leachable material, wastes or chemicals). For developments with a mix of land use types, the Basic Treatment requirement shall apply when the runoff from the areas subject to the Basic Treatment requirement comprises 50% or more of the total runoff within a threshold discharge area.

Please refer to the Basic Treatment Menu in Section 3.5. Select an option from the menu after reviewing the applicability and limitations, site suitability, and design criteria of each for compatibility with the site.

After selecting a Basic Treatment Facility, please refer to the General Requirements in Chapter 4. They may affect the design and placement of the facility on the site.

You have completed the treatment facility selection process.

2.2 Other Treatment Facility Selection Factors

The selection of a treatment facility should be based on site physical factors and pollutants of concern. The requirements for use of Enhanced Treatment or Phosphorus Treatment represent facility selection based on pollutants of concern. Even if the site is not subject to those requirements, try to choose a facility that is more likely to do a better job removing the

types of pollutants generated on the site. The types of site physical factors that influence facility selection are summarized below.

Soil Type (Table 2.2.1)

The permeability of the soil underlying a treatment facility has a profound influence on its effectiveness. This is particularly true for infiltration treatment facilities that are sited in sandy to loamy sand soils. They are not generally appropriate for sites that have final infiltration rates (f) of less than 0.5 inches per hour. Wet pond facilities situated on coarser soils will need a synthetic liner or the soils amended to reduce the infiltration rate and provide treatment. Maintaining a permanent pool in the first cell is necessary to avoid resuspension of settled solids. Biofiltration swales in coarse soils can also be amended to reduce the infiltration rate.

High Sediment Input

High TSS loads can clog infiltration soil, sand filters and coalescing plate oil & water separators. Pretreatment with a presettling basin, wet vault, or another basic treatment facility would typically be necessary.

Other Physical Factors

Slope: Steep slopes restrict the use of several BMPs. For example, biofiltration swales are usually situated on sites with slopes of less than 6%, although greater slopes can be considered. Infiltration BMPs are not suitable when the slope exceeds 15%.

High Water Table: Unless there is sufficient horizontal hydraulic receptor capacity the water table acts as an effective barrier to exfiltration and can sharply reduce the efficiency of an infiltration system. If the high water table extends to within five (5) feet of the bottom of an infiltration BMP, the site is seldom suitable.

Depth to Bedrock/ Hardpan/Till: The downward exfiltration of stormwater is also impeded if a bedrock or till layer lies too close to the surface. If the impervious layer lies within five feet below the bottom of the infiltration BMP the site is not suitable. Similarly, pond BMPs are often not feasible if bedrock lies within the area that must be excavated.

Proximity to Foundations and Wells: Since infiltration BMPs convey runoff back into the soil, some sites may experience problems with local seepage. This can be a real problem if the BMP is located too close to a building foundation. Another risk is ground water pollution; hence the requirement to site infiltration systems more than 100 feet away from drinking water wells.

Maximum Depth: Wet ponds are also subject to a maximum depth limit for the "permanent pool" volume. Deep ponds (greater than 8 feet) may stratify during summer and create low oxygen conditions near the bottom resulting in re-release of phosphorus and other pollutants back into the water.

Table 2.2.1
Screening Treatment Facilities Based on Soil Type

Soil Type	Infiltration/ Bioretention	Wet Pond*	Biofiltration* (Swale or Filter Strip)
Coarse Sand or Cobbles	✕	✕	✕
Sand	✔	✕	✕
Loamy Sand	✔	✕	✔
Sandy Loam	✔	✕	✔
Loam	✕	✕	✔
Silt Loam	✕	✕	✔
Sandy Clay Loam	✕	✔	✔
Silty Clay Loam	✕	✔	✔
Sandy Clay	✕	✔	✔
Silty Clay	✕	✔	✕
Clay	✕	✔	✕

Notes:
✔ Indicates that use of the technology is generally appropriate for this soil type.
✕ Indicates that use of the technology is generally not appropriate for this soil type

* Coarser soils may be used for these facilities if a liner is installed to prevent infiltration, or if the soils are amended to reduce the infiltration rate.
Note: Sand filtration is not listed because its feasibility is not dependent on soil type.

This page purposely left blank

Chapter 3. - Treatment Facility Menus

This chapter identifies choices that comprise the treatment facility menus referred to in Chapter 2. The menus in this chapter are discussed in the order of the decision process shown in Figure 2.1.1 and are as follows:

Oil Control Menu, Section 3.2

Phosphorus Treatment Menu, Section 3.3

Enhanced Treatment Menu, Section 3.4

Basic Treatment Menu, Section 3.5

Section 12.5 includes links to menus for emerging technologies that have a Use-Level Designation for pretreatment, oil, phosphorous, enhanced, or basic treatment. Only technologies with a General Use-Level Designation (GULD) can have an unlimited number of installations.

3.1 Guide to Applying Menus

Read the step-by-step selection process for treatment facilities in Section 2.1.

Determine which menus apply to the discharge situation. This will require knowledge of (1) the receiving water(s) that the project site ultimately discharges to, and (2) whether the local government with jurisdiction, the Department of Ecology or the USEPA, has identified the receiving water as subject to phosphorus control requirements, and (3) whether the site qualifies as subject to oil control.

Determine if your project requires oil control.

If the project requires oil control, or if you elect to provide enhanced oil pollution control, choose one of the options presented in the Oil Control Menu, Section 3.2. Detailed designs for oil control facilities are given in subsequent chapters.

Note: One of the other three treatment menus will also need to be applied along with oil control.

Find the Treatment Menu that applies to the project – Basic, Enhanced, or Phosphorus.

Each menu presents treatment options. Select one option. Since all options are intended to provide equivalent removal of the target pollutant, the choice will depend only on the constraints and opportunities of the site. A project site may be subject to both the Enhanced Treatment requirement and the Phosphorus Treatment requirement. In that event, select a facility or a treatment train that is listed in both treatment menus. Note: If flow control requirements apply, it will usually be more economical to use the

combined detention/wetpool facilities. Detailed facility designs for all the possible options are given in subsequent chapters in this Volume.

Read Chapter 4 concerning general facility requirements.

They apply to all facilities and may affect the design and placement of facilities on the site.

3.2 Oil Control Menu

Note: Where this menu is applicable, it is in addition to facilities required by one of the other Treatment Menus.

Application on the Project Site: Oil control facilities are to be placed upstream of other facilities, as close to the source of oil generation as practical. For high-use sites located within a larger commercial center, only the impervious surface associated with the high-use portion of the site is subject to treatment requirements. If common parking for multiple businesses is provided, treatment shall be applied to the number of parking stalls required for the high-use business only. However, if the treatment collection area also receives runoff from other areas, the treatment facility must be sized to treat all water passing through it.

High-use roadway intersections shall treat lanes where vehicles accumulate during the signal cycle, including left and right turn lanes and through lanes, from the beginning of the left turn pocket. If no left turn pocket exists, the treatable area shall begin at a distance equal to three car lengths from the stop line. If runoff from the intersection drains to more than two collection areas that do not combine within the intersection, treatment may be limited to any two of the collection areas.

Performance Goal: The facility choices in the Oil Control Menu are intended to achieve the goals of no ongoing or recurring visible sheen, and to have a 24-hour average Total Petroleum Hydrocarbon (TPH) concentration no greater than 10 mg/l, and a maximum of 15 mg/l for a discrete sample (grab sample).

Note: Use the method for NWTPH-Dx in Ecology Publication No. ECY 97-602, Analytical Methods for Petroleum Hydrocarbons. If the concentration of gasoline is of interest, the method for NWTPH-Gx should be used to analyze grab samples.

Options: Oil control options include facilities that are small, treat runoff from a limited area, and require frequent maintenance. The options also include facilities that treat runoff from larger areas and generally have less frequent maintenance needs.

- **API-Type Oil/Water Separator** – See Chapter 11
- **Coalescing Plate Oil/Water Separator** – See Chapter 11

- **Emerging Stormwater Treatment Technologies** – See Chapter 12
- **Linear Sand Filter** – See Chapter 8

Note: The linear sand filter is used in the Basic, Enhanced, and Phosphorus Treatment menus also. If used to satisfy one of those treatment requirements, the same facility shall not also be used to satisfy the oil control requirement unless increased maintenance is assured. This increase in maintenance is to prevent clogging of the filter by oil so that it will function for suspended solids, metals and phosphorus removal as well. Quarterly cleaning is required unless specified otherwise by the designer.

3.3 Phosphorus Treatment Menu

Where Applied: The Phosphorus Treatment Menu applies to projects within watersheds that have been determined by local governments, the Department of Ecology, or the USEPA to be sensitive to phosphorus and that are being managed to control phosphorus inputs from stormwater. This menu applies to stormwater conveyed to the lake by surface flow as well as to stormwater infiltrated within one-quarter mile of the lake in soils that do not meet the soil suitability criteria in Chapter 3 of Volume III.

Performance Goal: The Phosphorus Menu facility choices are intended to achieve a goal of 50% total phosphorus removal for a range of influent concentrations of 0.1 – 0.5 mg/l total phosphorus. In addition, the choices are intended to achieve the Basic Treatment performance goal. The performance goal applies to the water quality design storm volume or flow rate, whichever is applicable.~~, and on an annual average basis~~. The incremental portion of runoff in excess of the water quality design flow rate or volume can be routed around the facility (off-line treatment facilities), or can be passed through the facility (on-line treatment facilities) provided a net pollutant reduction is maintained. Ecology encourages the design and operation of treatment facilities that engage a bypass at flow rates higher than the water quality design flow rate. This is acceptable provided that the overall reduction in phosphorus loading (treated plus bypassed) is at least equal to that achieved with initiating bypass at the water quality design flow rate. Note that wetpool facilities are always designed to be on-line.

Options: Any one of the following options may be chosen to satisfy the phosphorus treatment requirement.

- **Infiltration (**Chapter 3 of Volume III) **with appropriate pretreatment** (Chapter 6 of Volume V) –Infiltration treatment

  If infiltration is through soils meeting the minimum site suitability criteria for infiltration treatment (See Section 3.3.7 of Volume III), a

presettling basin or a basic treatment facility can serve for pretreatment.

- Infiltration preceded by Basic Treatment

  If infiltration is through soils that do not meet the soil suitability criteria for infiltration treatment, treatment must be provided by a basic treatment facility unless the soil and site fit the description in the next option below.

- Infiltration preceded by Phosphorus Treatment

  If the soils do not meet the soil suitability criteria **and** the infiltration site is within ¼ mile of a phosphorus-sensitive receiving water, or a tributary to that water, treatment must be provided by one of the other treatment facility options listed below.

- **Large Sand Filter** – See Chapter 8
- **Large Wetpond** – See Chapter 10
- **Emerging Stormwater Treatment Technologies targeted for phosphorus removal** – See Chapter 12
- **Two-Facility Treatment Trains** – See Table 3.3.1

Table 3.3.1
Treatment Trains for Phosphorus Removal

First Basic Treatment Facility	Second Treatment Facility
Biofiltration Swale	Basic Sand Filter or Sand Filter Vault
Filter Strip	Linear Sand Filter (no presettling needed)
Linear Sand Filter	Filter Strip
Basic Wetpond	Basic Sand Filter or Sand Filter Vault
Wetvault	Basic Sand Filter or Sand Filter Vault
Stormwater Treatment Wetland	Basic Sand Filter or Sand Filter Vault
Basic Combined Detention and Wetpool	Basic Sand Filter or Sand Filter Vault

3.4 Enhanced Treatment Menu

Where Applied: Except where specified in Section 3.5 - Basic Treatment, Enhanced treatment is required for the following project sites that:

1) Discharge directly to fresh waters or conveyance systems tributary to fresh waters designated for aquatic life use or that have an existing aquatic life use; or

2) Use infiltration strictly for flow control – not treatment – and the discharge is within ¼ mile of a fresh water designated for aquatic life use or that has an existing aquatic life use:

Industrial project sites,

Commercial project sites,

Multi-family project sites, and

High AADT roads as follows:

Within Urban Growth ~~Management~~ Areas:

- Fully controlled and partially controlled limited access highways with Annual Average Daily Traffic (AADT) counts of 15,000 or more
- All other roads with an AADT of 7,500 or greater

Outside of Urban Growth ~~Management~~ Areas:

- Roads with an AADT of 15,000 or greater unless discharging to a 4th Strahler order stream or larger;
- Roads with an AADT of 30,000 or greater if discharging to a 4th Strahler order stream or larger (as determined using 1:24,000 scale maps to delineate stream order).

Any areas of the above-listed project sites that are identified as subject to Basic Treatment requirements (see Section 3.5 below) are not also subject to Enhanced Treatment requirements. For developments with a mix of land use types, the Enhanced Treatment requirement shall apply when the runoff from the areas subject to the Enhanced Treatment requirement comprises 50% or more of the total runoff within a threshold discharge area.

Performance Goal: The Enhanced Menu facility choices are intended to provide a higher rate of removal of dissolved metals than Basic Treatment facilities. Based on a review of dissolved metals removal of basic treatment options, a "higher rate of removal" is currently defined as greater than 30% dissolved copper removal, and greater than 60% dissolved zinc removal. In addition, the menu choices are intended to achieve the Basic Treatment performance goal. The performance goal

assumes that the facility is treating stormwater with dissolved Copper typically ranging from 0.005 to 0.02 mg/l, and dissolved Zinc ranging from 0.02 to 0.3 mg/l.

The performance goal applies to the water quality design storm volume or flow rate, whichever is applicable.~~, and on an annual average basis.~~ The incremental portion of runoff in excess of the water quality design flow rate or volume can be routed around the facility (off-line treatment facilities), or can be passed through the facility (on-line treatment facilities) provided a net pollutant reduction is maintained. Ecology encourages the design and operation of treatment facilities that engage a bypass at flow rates higher than the water quality design flow rate as long as the reduction in dissolved metals loading exceeds that achieved with initiating bypass at the water quality design flow rate. Note that wetpool facilities are always designed to be on-line. **Options:** Any one of the following options may be chosen to satisfy the enhanced treatment requirement:

- **Infiltration (**Chapter 3 of Volume III) **with appropriate pretreatment** (Chapter 6 of Volume V) –
  - Infiltration treatment

    If infiltration is through soils meeting the minimum site suitability criteria for infiltration treatment (See Section 3.3.7 of Volume III), a presettling basin or a basic treatment facility can serve for pretreatment.
  - Infiltration preceded by Basic Treatment

    If infiltration is through soils that do not meet the soil suitability criteria for infiltration treatment, treatment must be provided by a basic treatment facility unless the soil and site fit the description in the next option below.
  - Infiltration preceded by Enhanced Treatment

    If the soils do not meet the soil suitability criteria **and** the infiltration site is within ¼ mile of a fresh water designated for aquatic life use or that has an existing aquatic life use, treatment must be provided by one of the other treatment facility options listed below.
- **Large Sand Filter –** See Chapter 8
- **Stormwater Treatment Wetland** – See Chapter 10
- **Compost-amended Vegetated Filter Strip** (CAVFS) – See Chapter7
- **Two Facility Treatment Trains** – See Table 3.4.1

Table 3.4.1 Treatment Trains for Dissolved Metals Removal	
First Basic Treatment Facility	**Second Treatment Facility**
Biofiltration Swale	Basic Sand Filter or Sand Filter Vault or Media Filter(1)
Filter Strip	Linear Sand Filter with no pre-settling cell needed
Linear Sand Filter	Filter Strip
Basic Wetpond	Basic Sand Filter or Sand Filter Vault or Media Filter(1)
Wetvault	Basic Sand Filter or Sand Filter Vault or Media Filter(1)
Basic Combined Detention/Wetpool	Basic Sand Filter or Sand Filter Vault or Media Filter(1)
Basic Sand Filter or Sand Filter Vault with a presettling cell if the filter isn't preceded by a detention facility	Media Filter(1)

Footnote:
(1) The media must be a type approved for basic or enhanced treatment use by Ecology. See Chapter 12 for approved media filters.

- **Bioretention** – See Chapter 7~~, and the *Low Impact Development Technical Guidance Manual for Puget Sound* (LID Manual).~~
- **Note: Stormwa**ter runoff that infiltrates through the imported soil mix will have received Enhanced Treatment. Where bioretention is intended to fully meet treatment requirements for its drainage area, it must be designed, using an approved continuous runoff model, to pass at least 91% of the influent runoff file through the imported soil mix.
- **Media Filter Drain (MFD)** – See Chapter 8
- **Emerging Stormwater Treatment Technologies** – See Chapter 12

3.5 Basic Treatment Menu

Where Applied: The Basic Treatment Menu is required in the following circumstances:

- Project sites that discharge to the ground (see Step 3 in Chapter 2), UNLESS:
  - The soil suitability criteria for infiltration treatment are met (see Chapter 3 of Volume III), and pretreatment is provided; OR
  - The project uses infiltration strictly for flow control – not treatment - and the discharge is within ¼-mile of a phosphorus sensitive lake (use the Phosphorus Treatment Menu), or within ¼ mile of a fresh water designated for aquatic life use or that has an existing aquatic life use. (use the Enhanced Treatment Menu).

- Residential projects not otherwise needing phosphorus control in Step 4 (See Chapter 2) as designated by USEPA, the Department of Ecology, or a local government;
- Project sites discharging directly (or indirectly through a municipal separate storm sewer system) to Basic Treatment Receiving Waters listed in Appendix I-C;
- Project sites that drain to fresh waters, or to waters tributary to fresh waters, that are not designated for aquatic life use or that do not have an existing aquatic life use.

Landscaped areas of industrial, commercial, and multi-family project sites, and parking lots of industrial and commercial project sites, dedicated solely to parking of employees' private vehicles, which do not involve any other pollution-generating sources (e.g., industrial activities, customer parking, storage of erodible or leachable material, wastes or chemicals).

For developments with a mix of land use types, the Basic Treatment requirement shall apply when the runoff from the areas subject to the Basic Treatment requirement comprises 50% or more of the total runoff within a threshold discharge area.

Performance Goal: The Basic Treatment Menu facility choices are intended to achieve 80% removal of total suspended solids for influent concentrations that are greater than 100 mg/l, but less than 200 mg/l. For influent concentrations greater than 200 mg/l, a higher treatment goal may be appropriate. For influent concentrations less than 100 mg/l, the facilities are intended to achieve an effluent goal of 20 mg/l total suspended solids.

The performance goal applies to the water quality design storm volume or flow rate, whichever is applicable. ~~The goal also applies on an average annual basis to the entire annual discharge volume (treated plus bypassed).~~ The incremental portion of runoff in excess of the water quality design flow rate or volume can be routed around the facility (off-line treatment facilities), or can be passed through the facility (on-line treatment facilities) provided a net TSS reduction is maintained. Ecology encourages the design and operation of treatment facilities that engage a bypass at flow rates higher than the water quality design flow rate as long as the reduction in TSS loading exceeds that achieved with initiating bypass at the water quality design flow rate. Note that wetpool facilities are always designed to be on-line. The performance goal assumes that the facility is treating stormwater with a typical particle size distribution. For a description of a typical particle size distribution, please refer to the stormwater monitoring protocol on the Department of Ecology website.

Options: Any one of the following options may be chosen to satisfy the basic treatment requirement:

- **Infiltration –** See Chapter 7 of this volume, and Chapter 3 of Vol. III
- **Sand Filters –** See Chapter 8
- **Biofiltration Swales** – See Chapter 9
- **Vegetated Filter Strip** – See Chapter 9
- **Compost-amended Vegetated Filter Strip (CAVFS)** – See Chapter 7
-
- **Basic Wetpond** – See Chapter 10
- **Wetvault** – See Chapter 10 (see note)
- **Stormwater Treatment Wetland –** See Chapter 10
- **Combined Detention and Wetpool Facilities –** See Chapter 10
- **Bioretention**– See Chapter 7~~, and the *Low Impact Development Technical Guidance Manual for Puget Sound* (LID Manual)~~

  Note: Where bioretention is intended to fully meet treatment requirements for its drainage area, it must be designed, using an approved continuous runoff model, to pass at least 91% of the influent runoff file through the imported soil mix.
- **Media filter Drain (MFD)** – See Chapter 8
- **Emerging Stormwater Treatment Technologies** – See Chapter 12

Note: A wetvault may be used for commercial, industrial, or road projects if there are space limitations. Ecology discourages the use of wetvaults for residential projects. Combined detention/wetvaults are allowed; see Section 10.3.

This page purposely left blank

Chapter 4. - General Requirements for Stormwater Facilities

Note: All Figures in Chapter 4 are courtesy of King County

This chapter addresses general requirements for treatment facilities. Requirements discussed in this chapter include design volumes and flows, sequencing of facilities, liners, and hydraulic structures for splitting or dispersing flows.

4.1 Design Volume and Flow

4.1.1 Water Quality Design Storm Volume

The volume of runoff predicted from a 24-hour storm with a 6-month return frequency (a.k.a., 6-month, 24-hour storm). Alternatively, when using an approved continuous runoff model, the water quality design storm volume shall be equal to the simulated daily volume that represents the upper limit of the range of daily volumes that accounts for 91% of the entire runoff volume over a multi-decade period of record.

Wetpool facilities are sized based upon use of the NRCS (formerly known as SCS) curve number equations in Chapter 2 of Volume III, for the 6-month, 24-hour storm. Treatment facilities sized by this simple runoff volume-based approach are the same size whether they precede detention, follow detention, or are integral with the detention facility (i.e., a combined detention and wetpool facility).

Unless amended to reflect local precipitation statistics, the 6-month, 24-hour precipitation amount may be assumed to be 72 percent of the 2-year, 24-hour amount. Precipitation estimates of the 6-month and 2-year, 24-hour storms for certain towns and cities are listed in Appendix I-B of Volume I. For other areas, interpolating between isopluvials for the 2-year, 24-hour precipitation and multiplying by 72% yields the appropriate storm size. Isopluvials for 2-year, 24-hour amounts for Western Washington are reprinted in Volume III.

4.1.2 Water Quality Design Flow Rate

***Downstream of Detention Facilities*: The full 2-year release rate from the detention facility.**

An approved continuous runoff model should identify the 2-year return frequency flow rate discharged by a detention facility that is designed to meet the flow duration standard.

***Preceding Detention Facilities or when Detention Facilities are not required*: The flow rate at or below which 91% of the runoff volume,**

as estimated by an approved continuous runoff model, will be treated. At the time of publication, all BMPs except wetpool-types should use the 15-minute time series from an approved continuous runoff model.

Design criteria for treatment facilities are assigned to achieve the applicable performance goal at the water quality design flow rate (e.g., 80 percent TSS removal).

- *Off-line facilities*: For treatment facilities not preceded by an equalization or storage basin, and when runoff flow rates exceed the water quality design flow rate, the treatment facility should continue to receive and treat the water quality design flow rate to the applicable treatment performance goal. Only the higher incremental portion of flow rates are bypassed around a treatment facility. Ecology encourages design of systems that engage a bypass at higher flow rates provided the reduction in pollutant loading exceeds that achieved with bypass at the water quality design flow rate.

  Treatment facilities preceded by an equalization or storage basin may identify a lower water quality design flow rate provided that at least 91 percent of the estimated runoff volume in the time series of an approved continuous runoff model is treated to the applicable performance goals (e.g., 80 percent TSS removal at the water quality design flow rate and 80 percent TSS removal on an annual average basis).

- *On-line facilities*: Runoff flow rates in excess of the water quality design flow rate can be routed through the facility provided a net pollutant reduction is maintained~~, and the applicable annual average performance goal is likely to be met~~.

4.1.3 Flows Requiring Treatment

Runoff from pollution-generating hard or pervious surfaces must be treated. Pollution-generating hard surfaces (PGHS) are those hard surfaces considered to be a significant source of pollutants in stormwater runoff. PGHS includes pollution-generating impervious surfaces (PGIS) and pollution-generating permeable pavements. Permeable pavements subject to pollution-generating activities are also considered pollution-generating pervious surfaces (PGPS) because of their infiltration capability. The glossary in Volume I provides additional definitions and clarification of these terms.

- PGHS, PGIS, and PGPS include those surfaces which are subject to: vehicular use; industrial activities; or storage of erodible or leachable materials, wastes, or chemicals, and which receive direct rainfall or the run-on or blow-in of rainfall. Erodible or leachable materials, wastes, or chemicals are those substances which, when exposed to rainfall, measurably alter the physical or chemical characteristics of the rainfall runoff. Examples include erodible soils that are stockpiled, uncovered

process wastes, manure, fertilizers, oily substances, ashes, kiln dust, and garbage dumpster leakage. Metal roofs are considered to be PGIS unless they are coated with an inert, non-leachable material (e.g., baked enamel coating). Roofs subject to venting significant amounts of dusts, mists or fumes from manufacturing, commercial, or other indoor activities are also PGIS.

- A surface, whether paved or not, shall be considered subject to vehicular use if it is regularly used by motor vehicles. The following are considered regularly-used surfaces: roads, unvegetated road shoulders, bike lanes within the traveled lane of a roadway, driveways, parking lots, unrestricted access firelanes, vehicular equipment storage yards, and airport runways.
- The following are not considered regularly-used surfaces: paved bicycle pathways separated from and not subject to drainage from roads for motor vehicles, restricted access firelanes, and infrequently used maintenance access roads.
- Pollution-generating pervious surfaces (PGPS) are any non-impervious surface subject to vehicular use, industrial activities (as further defined in the glossary); or storage of erodible or leachable materials, wastes, or chemicals, and that receive direct rainfall or run-on or blow-in of rainfall, the use of pesticides and fertilizers or loss of soil. Typical PGPS include permeable pavement subject to vehicular use, lawns and landscaped areas including: golf courses, parks, cemeteries, and sports fields (natural and artificial turf).

Summary of Areas Needing Treatment

- All runoff from pollution-generating hard surfaces is to be treated through the water quality facilities specified in Chapter 2 and Chapter 3.
- Lawns and landscaped areas specified are pervious but also generate run-off into street drainage systems. In those cases the runoff from the pervious areas must be estimated and added to the runoff from hard surface areas to size treatment facilities.
- Runoff from backyards can drain into native vegetation in areas designated as open space or buffers. In these cases, the area in native vegetation may be used to provide the requisite water quality treatment, provided it meets the requirements in Chapter 5 under the "Cleared Area Dispersion BMPs," of BMP T5.30 Full Dispersion.
- Drainage from hard surfaces that are not pollution- generating need not be treated and may bypass runoff treatment, if it is not mingled with runoff from pollution-generating surfaces.
- Runoff from nonpollution-generating roofs is still subject to flow control per Minimum Requirement #7. The nonpollution-generating roof runoff that is directed to an infiltration trench or dry well must

first pass through a catch basin as shown in BMP T5.10A. Note that metal roofs are considered pollution generating unless they are coated with an inert non-leachabale material. Roofs that are subject to venting of significant amounts of manufacturing, commercial, or other indoor pollutants is considered pollution-generating.

- Drainage from areas in native vegetation should not be mixed with untreated runoff from streets and driveways, if possible. It is best to infiltrate or disperse this relatively clean runoff to maximize recharge to shallow ground water, wetlands, and streams.
- If runoff from non-pollution generating surfaces reaches a runoff treatment BMP, flows from those areas must be included in the sizing calculations for the facility. Once runoff from non-pollution generating areas is mixed with runoff from pollution-generating areas, it cannot be separated before treatment.

4.1.4 Minimum Treatment Facility Size

The treatment requirement is to treat at least 91% of the post-development runoff file as predicted by the WWHM or another approved continuous runoff model. The WWHM 2012 has a feature which allows the user to track the amount of stormwater that has passed through LID BMPs. If the LID BMP qualifies as a treatment facility (e.g., bioretention, permeable pavement with a sand sublayer or native soils that meet the soil ~~suitablility~~suitability requirement), the total amount of runoff that passes through the BMP counts towards meeting the 91% requirement.

Where LID treatment BMPs do not quite achieve the 91% requirement, they can be upsized to meet the requirement (e.g., a larger bioretention BMP, or a deeper gravel sub-base below permeable pavement to achieve more infiltration), or a conventional treatment system can be located to treat additional surface runoff. However, Ecology advises against using conventional treatment systems that are very small. For volume-based treatment systems, the minimum size recommended size is 0.0093 ac-ft. For flow-rate based treatment systems the minimum design flow rate is 0.0081 cubic feet per second (cfs). Rather than size a conventional system below these minima, Ecology recommends expanding the size of the LID treatment BMPs. A second option is to build the treatment facility using the minimum volume or flow rate cited above (whichever is applicable for the selected treatment type).

4.2 Sequence of Facilities

The Enhanced Treatment and Phosphorus Removal Menus, described in Chapter 3, include treatment options in which more than one type of

treatment facility is used. In those options, the sequence of facilities is prescribed. This is because the specific pollutant removal role of the second or third facility in a treatment often assumes that significant solids' settling has already occurred. For example, phosphorus removal using a two-facility treatment relies on the second facility (sand filter) to remove a finer fraction of solids than those removed by the first facility.

There is also the question of whether treatment facilities should be placed upstream or downstream of detention facilities that are needed for flow control purposes. In general, all treatment facilities may be installed upstream of detention facilities, although presettling basins are needed for sand filters and infiltration basins. However, not all treatment facilities can function effectively if located downstream of detention facilities. Those facilities that treat unconcentrated flows, such as filter strips are usually not practical downstream of detention facilities. Other types of treatment facilities present special problems that must be considered before placement downstream is advisable.

For instance, prolonged flows discharged by a detention facility that is designed to meet the flow duration standard of Minimum Requirement No. 7 may interfere with proper functioning of basic biofiltration swales and sand filters. Grasses typically specified in the basic biofiltration swale design will not survive. A wet biofilter design would be a better choice.

For sand filters, the prolonged flows may cause extended saturation periods within the filter. Saturated sand can lose all oxygen and become anoxic. If that occurs, some amount of phosphorus captured within the filter may become soluble and released. To prevent long periods of sand saturation, adjustments may be necessary after the sand filter is in operation to bypass some areas of the filter. This bypassing will allow them to drain completely. It may also be possible to employ a different type of facility that is less sensitive to prolonged flows.

Oil control facilities must be located upstream of treatment facilities and as close to the source of oil-generating activity as possible. They should also be located upstream of detention facilities, if possible.

Table 4.2.1 summarizes placement considerations of treatment facilities in relation to detention.

Table 4.2.1 Treatment Facility Placement in Relation to Detention		
Water Quality Facility	**Preceding Detention**	**Following Detention**
Basic biofiltration swale (Chapter 9)	OK	OK. Prolonged flows may reduce grass survival. Consider wet biofiltration swale
Wet biofiltration swale (Chapter 9)	OK	OK
Filter strip (Chapter 9)	OK	No—must be installed before flows concentrate.
Basic or large wetpond (Chapter 10)	OK	OK—less water level fluctuation in ponds downstream of detention may improve aesthetic qualities and performance.
Basic or large combined detention and wetpond (Chapter 10)	Not applicable	Not applicable
Wetvault (Chapter 10)	OK	OK
Basic or large sand filter or sand filter vault (Chapter 8)	OK, but presettling and control of floatables needed	OK—sand filters downstream of detention facilities may require field adjustments if prolonged flows cause sand saturation and interfere with phosphorus removal.
Stormwater treatment wetland/pond (Chapter 10)	OK	OK—less water level fluctuation and better plant diversity are possible if the stormwater wetland is located downstream of the detention facility.

Note: Emerging Technologies may be installed either upstream or downstream of detention facilities. The location depends on the type of technology and the level of treatment desired.

4.3 Setbacks, Slopes, and Embankments

The following guidelines for setbacks, slopes, and embankments are intended to provide for adequate maintenance accessibility to runoff treatment facilities. Setback requirements are generally required by local regulations, International building code requirements, or other state regulations. Local governments should require specific setback, slopes and embankment limitations to address public health and safety concerns.

4.3.1 Setbacks

Local governments may require specific setbacks in sites with steep slopes, land-slide areas, open water features, springs, wells, and septic tank drain fields. Setbacks from tract lines are necessary for maintenance access and equipment maneuverability. Adequate room for maintenance equipment should be considered during site design.

Examples of text describing commonly used setbacks include the following:

- Stormwater infiltration systems shall be set back at least 100 feet from open water features and 200 feet from springs used for drinking water supply. Infiltration facilities upgradient of drinking water supplies must comply with Health Department requirements (Washington Wellhead Protection Program, Department of Health, 12/93).
- Stormwater infiltration systems, and unlined wetponds and detention ponds shall be located at least 100 feet from drinking water wells and septic tanks and drainfields.
- Wetvaults and tanks may be required to be set back from building foundations, structures, property lines, and vegetative buffers. A typical setback requirement is 20 feet, for maintenance access.
- All facilities shall be a minimum of 50 feet from any steep (greater than 15%) slope. A geotechnical report must address the potential impact of a wetpond on a steep slope

4.3.2 Side Slopes and Embankments

- Side slopes should preferably not exceed a slope of 3H:1V. Moderately undulating slopes are acceptable and can provide a more natural setting for the facility. In general, gentle side slopes improve the aesthetic attributes of the facility and enhance safety.
- Interior side slopes may be retaining walls, if the design is prepared and stamped by a licensed civil engineer. A fence should be provided along the top of the wall.
- Maintenance access should be provided through an access ramp or other adequate means.

- Embankments that impound water must comply with the Washington State Dam Safety Regulations (Chapter 173-175 WAC). If the impoundment has a storage capacity, including both water and sediment storage volumes, greater than 10 acre-feet above natural ground level, then dam safety design and review are required by the Department of Ecology. See Chapter 3, Volume III, for more detail concerning Detention Ponds.

4.4 Facility Liners

Liners are intended to reduce the likelihood that pollutants in stormwater will reach ground water when runoff treatment facilities are constructed. In addition to ground water protection considerations, some facility types require permanent water for proper functioning. An example is the first cell of a wetpond.

Treatment liners amend the soil with materials that treat stormwater before it reaches more freely draining soils. They have slow rates of infiltration, generally less than 2.4 inches per hour (1.7×10^{-3} cm/s), but not as slow as low permeability liners. Treatment liners may use in-place native soils or imported soils.

Low permeability liners reduce infiltration to a very slow rate, generally less than 0.02 inches per hour (1.4×10^{-5} cm/s). These types of liners should be used for industrial or commercial sites with a potential for high pollutant loading in the stormwater runoff. Low permeability liners may be fashioned from compacted till, clay, geomembrane, or concrete. Till liners are preferred because of their general resilience and ease of maintenance.

4.4.1 General Design Criteria

- Table 4.4.1 shows recommendations for the type of liner generally best suited for use with various runoff treatment facilities.
- Liners shall be evenly placed over the bottom and/or sides of the treatment area of the facility as indicated in Table 4.4.1. Areas above the treatment volume required to pass flows greater than the water quality treatment flow (or volume) need not be lined. However, the lining must be extended to the top of the interior side slope and anchored if it cannot be permanently secured by other means.
- For low permeability liners, the following criteria apply:
    1. Where the seasonal high ground water elevation is likely to contact a low permeability liner, liner buoyancy may be a concern. A low permeability liner shall not be used in this situation unless evaluated and recommended by a geotechnical engineer.

2. Where grass must be planted over a low permeability liner per the facility design, a minimum of 6 inches of good topsoil or compost-amended native soil (2 inches compost tilled into 6 inches of native till soil) must be placed over the liner in the area to be planted. Twelve inches of cover is preferred.

- If a treatment liner will be below the seasonal high water level, the pollutant removal performance of the liner must be evaluated by a geotechnical or ground water specialist and found to be as protective as if the liner were above the level of the ground water.

See Sections 4.4.2 and 4.4.3 for more specific design criteria for treatment liners and low permeability liners.

Table 4.4.1
Lining Types Recommended for Runoff Treatment Facilities

WQ Facility	Area to be Lined	Type of Liner Recommended
Presettling basin	Bottom and sides	Low permeability liner or Treatment liner (If the basin will intercept the seasonal high ground water table, a treatment liner is recommended.)
Wetpond	First cell: bottom and sides to WQ design water surface ---------- Second cell: bottom and sides to WQ design water surface	Low permeability liner or Treatment liner (If the wet pond will intercept the seasonal high ground water table, a treatment liner is recommended.) ---------- Treatment liner
Combined detention/WQ facility	First cell: bottom and sides to WQ design water surface ---------- Second cell: bottom and sides to WQ design water surface	Low permeability liner or Treatment liner (If the facility will intercept the seasonal high ground water table a treatment liner is recommended.) ---------- Treatment liner
Stormwater wetland	Bottom and sides, both cells	Low permeability liner (If the facility will intercept the seasonal high ground water table, a treatment liner is recommended.)
Sand filtration basin	Basin sides only	Treatment liner
Sand filter vault	Not applicable	No liner needed
Linear sand filter	Not applicable if in vault Bottom and sides of presettling cell if not in vault	No liner needed Low permeability or treatment liner
Media filter (in vault)	Not applicable	No liner needed
Wet vault	Not applicable	No liner needed

4.4.2 Design Criteria for Treatment Liners

This section presents the design criteria for treatment liners.

- A two-foot thick layer of soil with a minimum organic content of 1.0% AND a minimum cation exchange capacity (CEC) of 5 milliequivalents/100 grams can be used as a treatment layer beneath a water quality or detention facility.
- To demonstrate that in-place soils meet the above criteria, one sample per 1,000 square feet of facility area shall be tested. Each sample shall be a composite of subsamples taken throughout the depth of the treatment layer (usually two to six feet below the expected facility invert).
- Typically, side wall seepage is not a concern if the seepage flows through the same stratum as the bottom of the treatment BMP. However, if the treatment soil is an engineered soil or has very low permeability, the potential to bypass the treatment soil through the side walls may be significant. In those cases, the treatment BMP side walls may be lined with at least 18 inches of treatment soil, as described above, to prevent untreated seepage. This lesser soil thickness is based on unsaturated flow as a result of alternating wet-dry periods.
- Organic content shall be measured on a dry weight basis using ASTM D2974.
- Cation exchange capacity (CEC) shall be tested using EPA laboratory method 9081.
- Certification by a soils testing laboratory that imported soil meets the organic content and CEC criteria above shall be provided to the local approval authority.
- Animal manures used in treatment soil layers must be sterilized because of potential for bacterial contamination of the ground water.

4.4.3 Design Criteria for Low Permeability Liner Options

This section presents the design criteria for each of the following four low permeability liner options: compacted till liners, clay liners, geomembrane liners, and concrete liners.

Compacted Till Liners

- Liner thickness shall be 18 inches after compaction.
- Soil shall be compacted to 95% minimum dry density, modified proctor method (ASTM D-1557).
- A different depth and density sufficient to retard the infiltration rate to 2.4×10^{-5} inches per minute (1×10^{-6} cm/s) may also be used instead of Criteria 1 and 2.

- Soil should be placed in 6-inch lifts.
- Soils may be used that meet the following gradation:

Table 4.4.2 Compacted Till Liners	
Sieve Size	**Percent Passing**
6-inch	100
4-inch	90
#4	70 - 100
#200	20

Clay Liners

- Liner thickness shall be 12 inches.
- Clay shall be compacted to 95% minimum dry density, modified proctor method (ASTM D-1557).
- A different depth and density sufficient to retard the infiltration rate to 2.4 x 10-5 inches per minute (1 x 10-6 cm/s) may also be used instead of the above criteria.
- The slope of clay liners must be restricted to 3H: IV for all areas requiring soil cover; otherwise, the soil layer must be stabilized by another method so that soil slippage into the facility does not occur. Any alternative soil stabilization method must take maintenance access into consideration.
- Where clay liners form the sides of ponds, the interior side slope should not be steeper than 3: 1, irrespective of fencing. This restriction is to ensure that anyone falling into the pond may safely climb out.

Geomembrane Liners

- Geomembrane liners shall be ultraviolet (UV) light resistant and have a minimum thickness of 30 mils. A thickness of 40 mils shall be used in areas of maintenance access or where heavy machinery must be operated over the membrane.
- Geomembranes shall be bedded according to the manufacturer's recommendations.
- Liners shall be installed so that they can be covered with 12 inches of top dressing forming the bottom and sides of the water quality facility, except for liner sand filters. Top dressing shall consist of 6 inches of crushed rock covered with 6 inches of native soil. The rock layer is to mark the location of the liner for future maintenance operations. As an alternative to crushed rock, 12 inches of native soil may be used if orange plastic “safety fencing” or another highly-visible, continuous marker is embedded 6 inches above the membrane.

- If possible, liners should be of a contrasting color so that maintenance workers are aware of any areas where a liner may have become exposed when maintaining the facility.
- Geomembrane liners shall not be used on slopes steeper than 5H:1V to prevent the top dressing material from slipping. Textured liners may be used on slopes up to 3H:1V upon recommendation by a geotechnical engineer that the top dressing will be stable for all site conditions, including maintenance.

Concrete Liners

- Portland cement liners are allowed irrespective of facility size, and shotcrete may be used on slopes. However, specifications must be developed by a professional engineer who certifies the liner against cracking or losing water retention ability under expected conditions of operation, including facility maintenance operations. Weight of maintenance equipment can be up to 80,000 pounds when fully loaded.
- Asphalt concrete may not be used for liners due to its permeability to many organic pollutants.
- If grass is to be grown over a concrete liner, slopes must be no steeper than 5H: IV to prevent the top dressing material from slipping.

4.5 Hydraulic Structures

4.5.1 Flow Splitter Designs

Many water quality (WQ) facilities can be designed as flow-through or on-line systems with flows above the WQ design flow or volume simply passing through the facility at a lower pollutant removal efficiency. However, it is sometimes desirable to restrict flows to WQ treatment facilities and bypass the remaining higher flows around them through off-line facilities. This can be accomplished by splitting flows in excess of the WQ design flow upstream of the facility and diverting higher flows to a bypass pipe or channel. The bypass typically enters a detention pond or the downstream receiving drainage system, depending on flow control requirements. In most cases, it is a designer's choice whether WQ facilities are designed as on-line or off-line; an exception is oil/water separators, which must be designed off-line.

A crucial factor in designing flow splitters is to ensure that low flows are delivered to the treatment facility up to the WQ design flow rate. Above this rate, additional flows are diverted to the bypass system with minimal increase in head at the flow splitter structure to avoid surcharging the WQ facility under high flow conditions.

Flow splitters are typically manholes or vaults with concrete baffles. In place of baffles, the splitter mechanism may be a half tee section with a solid top and an orifice in the bottom of the tee section. A full tee option

may also be used as described below in the "General Design Criteria." We show two possible design options for flow splitters in Figure 4.5.1 and Figure 4.5.2 (King County). Other equivalent designs that achieve the result of splitting low flows and diverting higher flows around the facility are also acceptable.

General Design Criteria

- A flow splitter must be designed to deliver the WQ design flow rate specified in this volume to the WQ treatment facility. For the basic size sand filter, which is sized based on volume, use the WQ design flow rate to design the splitter. For the large sand filter, use the 2-year flow rate or the flow rate that corresponds with treating 95 percent of the runoff volume of a long-term time series predicted by an approved continuous runoff model.
- The top of the weir must be located at the water surface for the design flow. Remaining flows enter the bypass line. Flows modeled using a continuous simulation model should use 15-minute time steps, if available. Otherwise use 1-hour time steps.
- The maximum head must be minimized for flow in excess of the WQ design flow. Specifically, flow to the WQ facility at the 100-year water surface must not increase the design WQ flow by more than 10%.
- Either design shown in Figure 4.5.1 or Figure 4.5.2 or an equivalent design may be used.
- As an alternative to using a solid top plate in Figure 4.5.2, a full tee section may be used with the top of the tee at the 100-year water surface. This alternative would route emergency overflows (if the overflow pipe were plugged) through the WQ facility rather than back up from the manhole.
- Special applications, such as roads, may require the use of a modified flow splitter. The baffle wall may be fitted with a notch and adjustable weir plate to proportion runoff volumes other than high flows.
- For ponding facilities, back water effects must be included in designing the height of the standpipe in the manhole.
- Ladder or step and handhold access must be provided. If the weir wall is higher than 36 inches, two ladders, one to either side of the wall, must be used.

Materials

- The splitter baffle may be installed in a Type 2 manhole or vault.
- The baffle wall must be made of reinforced concrete or another suitable material resistant to corrosion, and have a minimum 4-inch thickness. The minimum clearance between the top of the baffle wall

and the bottom of the manhole cover must be 4 feet; otherwise, dual access points should be provided.

- All metal parts must be corrosion resistant. Examples of preferred materials include aluminum, stainless steel, and plastic. Zinc and galvanized materials are discouraged because of aquatic toxicity. Painted metal parts should not be used because of poor longevity.

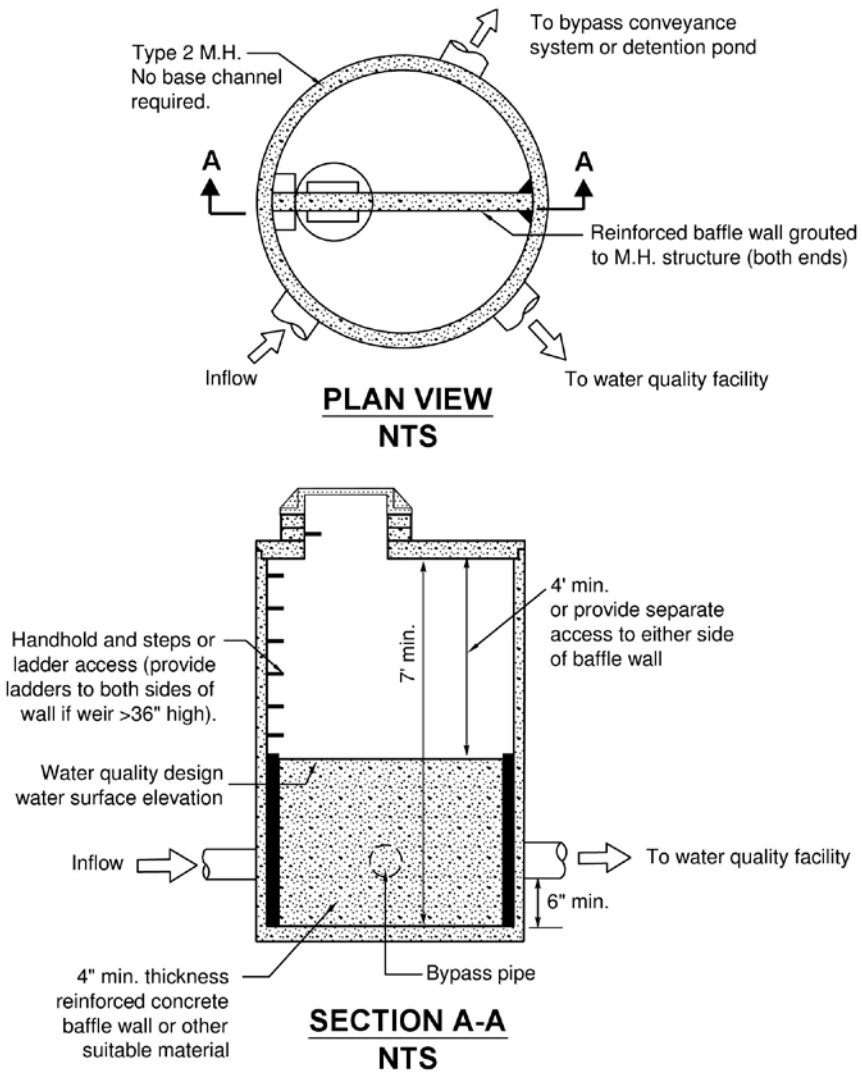

Note: The water quality discharge pipe may require an orifice plate to be installed on the outlet to control the height of the design water surface (weir height). The design water surface should be set to provide a minimum headwater/diameter ratio of 2.0 on the outlet pipe.

Figure 4.5.1 – Flow Splitter, Option A

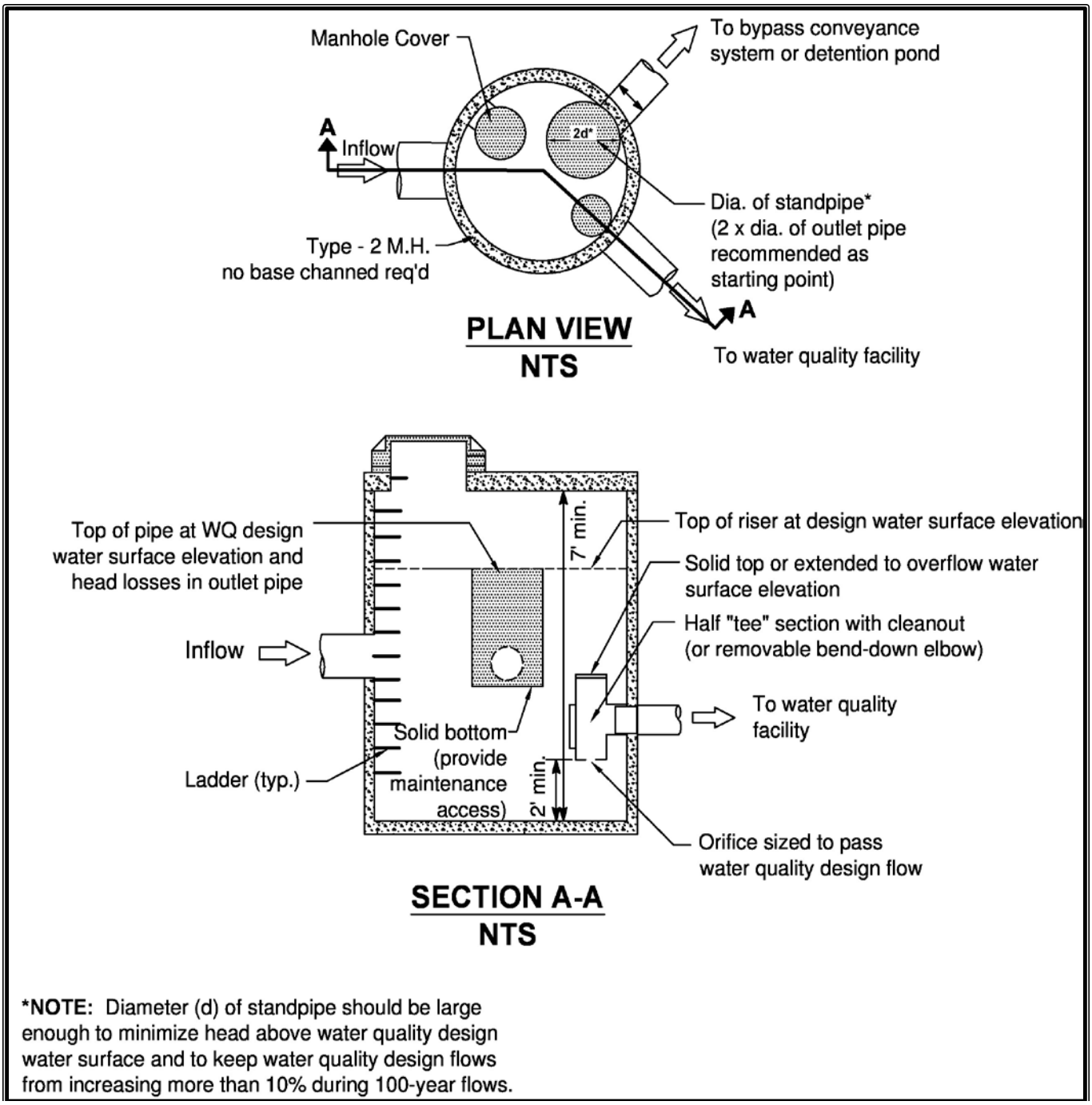

Figure 4.5.2 – Flow Splitter, Option B

4.5.2 Flow Spreading Options

Flow spreaders function to uniformly spread flows across the inflow portion of water quality facilities (e.g., sand filter, biofiltration swale, or filter strip). There are five flow spreader options presented in this section:

Option A – Anchored plate

Option B – Concrete sump box

Option C – Notched curb spreader

Option D – Through-curb ports

Option E – Interrupted curb

Options A through C can be used for spreading flows that are concentrated. Any one of these options can be used when spreading is required by the facility design criteria. Options A through C can also be used for unconcentrated flows, and in some cases must be used, such as to correct for moderate grade changes along a filter strip.

Options D and E are only for flows that are already unconcentrated and enter a filter strip or continuous inflow biofiltration swale. Other flow spreader options are possible with approval from the reviewing authority.

General Design Criteria

- Where flow enters the flow spreader through a pipe, it is recommended that the pipe be submerged to the extent practical to dissipate energy as much as possible.
- For higher inflows (greater than 5 cfs for the 100-yr storm), a Type 1 catch basin should be positioned in the spreader and the inflow pipe should enter the catch basin with flows exiting through the top grate. The top of the grate should be lower than the level spreader plate, or if a notched spreader is used, lower than the bottom of the v-notches.
- Table 4.5.1 provides general guidance for rock protection at outfalls.

Table 4.5.1 Rock Protection at Outfalls					
Discharge Velocity at Design Flow in feet per second (fps)	**Required Protection Minimum Dimensions**				
	Type	**Thickness**	**Width**	**Length**	**Height**
0 – 5	Rock lining[1]	1 foot	Diameter + 6 feet	8 feet *or* 4 x diameter, whichever is greater	Crown + 1 foot
5^{+} - 10	Riprap[2]	2 feet	Diameter + 6 feet *or* 3 x diameter, whichever is greater	12 feet *or* 4 x diameter, whichever is greater	Crown + 1 foot
10^{+} - 20	Gabion outfall	As required	As required	As required	Crown + 1 foot
20^{+}	Engineered energy dissipater required				

Footnotes:

(1) **Rock lining** shall be quarry spalls with gradation as follows:

Passing 8-inch square sieve: 100%
Passing 3-inch square sieve: 40 to 60% maximum
Passing ¾-inch square sieve: 0 to 10% maximum

(2) **Riprap** shall be reasonably well graded with gradation as follows:

Maximum stone size: 24 inches (nominal diameter)
Median stone size: 16 inches
Minimum stone size: 4 inches

Note: Riprap sizing governed by side slopes on outlet channel, assumed to be approximately 3:1 (H:V).

Option A -- Anchored Plate (Figure 4.5.3)

- An anchored plate flow spreader must be preceded by a sump having a minimum depth of 8 inches and minimum width of 24 inches. If not otherwise stabilized, the sump area must be lined to reduce erosion and to provide energy dissipation.
- The top surface of the flow spreader plate must be level, projecting a minimum of 2 inches above the ground surface of the water quality facility, or V-notched with notches 6 to 10 inches on center and 1 to 6 inches deep (use shallower notches with closer spacing). Alternative designs may also be used.
- A flow spreader plate must extend horizontally beyond the bottom width of the facility to prevent water from eroding the side slope. The horizontal extent should be such that the bank is protected for all flows up to the 100-year flow or the maximum flow that will enter the Water Quality (WQ) facility.
- Flow spreader plates must be securely fixed in place.
- Flow spreader plates may be made of either wood, metal, fiberglass reinforced plastic, or other durable material. If wood, pressure treated 4 by 10-inch lumber or landscape timbers are acceptable.

- Anchor posts must be 4-inch square concrete, tubular stainless steel, or other material resistant to decay.

Option B -- Concrete Sump Box (Figure 4.5.4)

- The wall of the downstream side of a rectangular concrete sump box must extend a minimum of 2 inches above the treatment bed. This serves as a weir to spread the flows uniformly across the bed.
- The downstream wall of a sump box must have "wing walls" at both ends. Side walls and returns must be slightly higher than the weir so that erosion of the side slope is minimized.
- Concrete for a sump box can be either cast-in-place or precast, but the bottom of the sump must be reinforced with wire mesh for cast-in-place sumps.
- Sump boxes must be placed over bases that consists of 4 inches of crushed rock, 5/8-inch minus to help assure the sump remains level.

Option C -- Notched Curb Spreader (Figure 4.5.5)

Notched curb spreader sections must be made of extruded concrete laid side-by-side and level. Typically five "teeth" per four-foot section provide good spacing. The space between adjacent "teeth" forms a v-notch.

Option D -- Through-Curb Ports (Figure 4.5.6)

Unconcentrated flows from paved areas entering filter strips or continuous inflow biofiltration swales can use curb ports or interrupted curbs (Option E) to allow flows to enter the strip or swale. Curb ports use fabricated openings that allow concrete curbing to be poured or extruded while still providing an opening through the curb to admit water to the WQ facility.

Openings in the curb must be at regular intervals but at least every 6 feet (minimum). The width of each curb port opening must be a minimum of 11 inches. Approximately 15 percent or more of the curb section length should be in open ports, and no port should discharge more than about 10 percent of the flow.

Option E -- Interrupted Curb (No Figure)

Interrupted curbs are sections of curb placed to have gaps spaced at regular intervals along the total width (or length, depending on facility) of the treatment area. At a minimum, gaps must be every 6 feet to allow distribution of flows into the treatment facility before they become too concentrated. The opening must be a minimum of 11 inches. As a general rule, no opening should discharge more than 10 percent of the overall flow entering the facility.

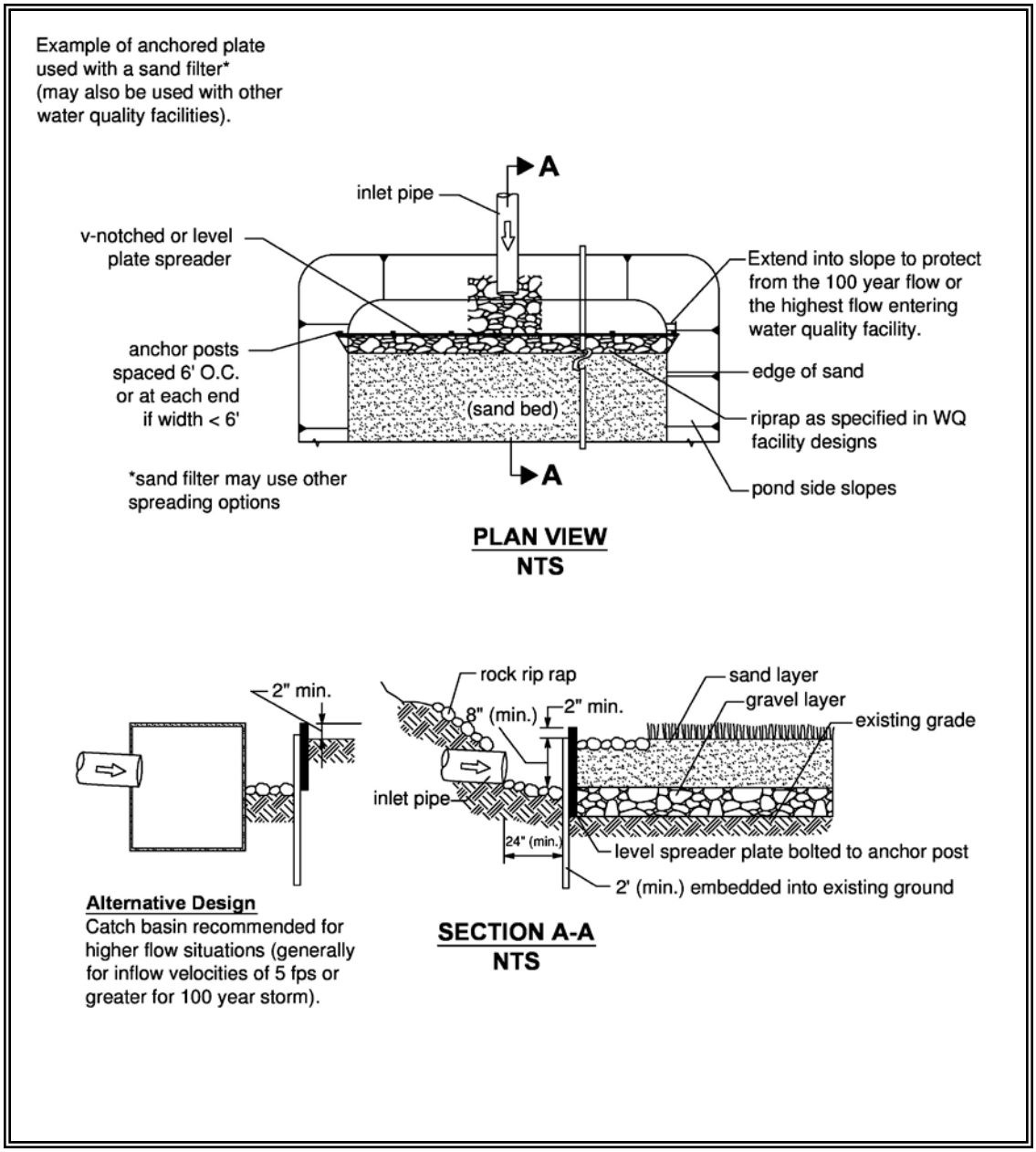

Figure 4.5.3 – Flow Spreader Option A: Anchored Plate

Example of a concrete sump flow spreader used with a biofiltration swale (may be used with other WQ facilities).

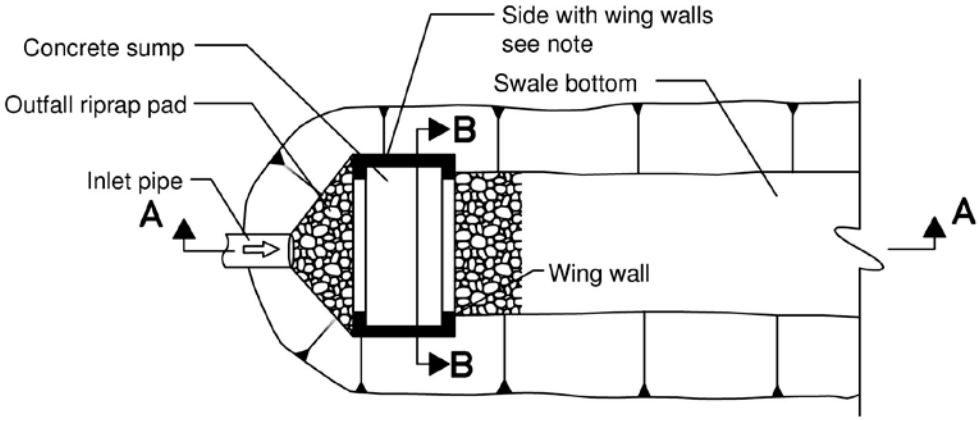

PLAN VIEW
NTS

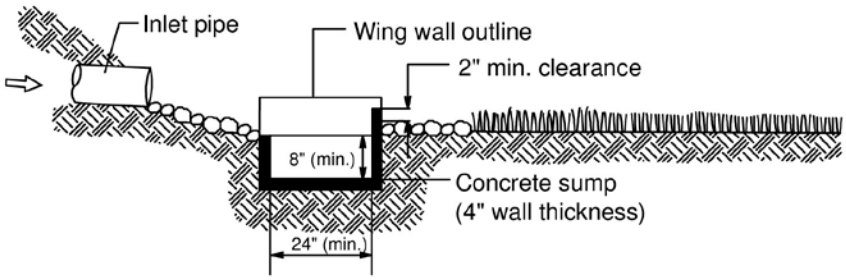

Note: Extend sides into slope. Height of side wall and wing walls must be sufficient to handle the 100-year flow or the highest flow entering the facility.

SECTION A-A
NTS

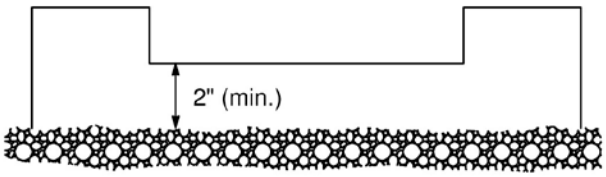

SECTION B-B
NTS

Figure 4.5.4 – Flow Spreader Option B: Concrete Sump Box

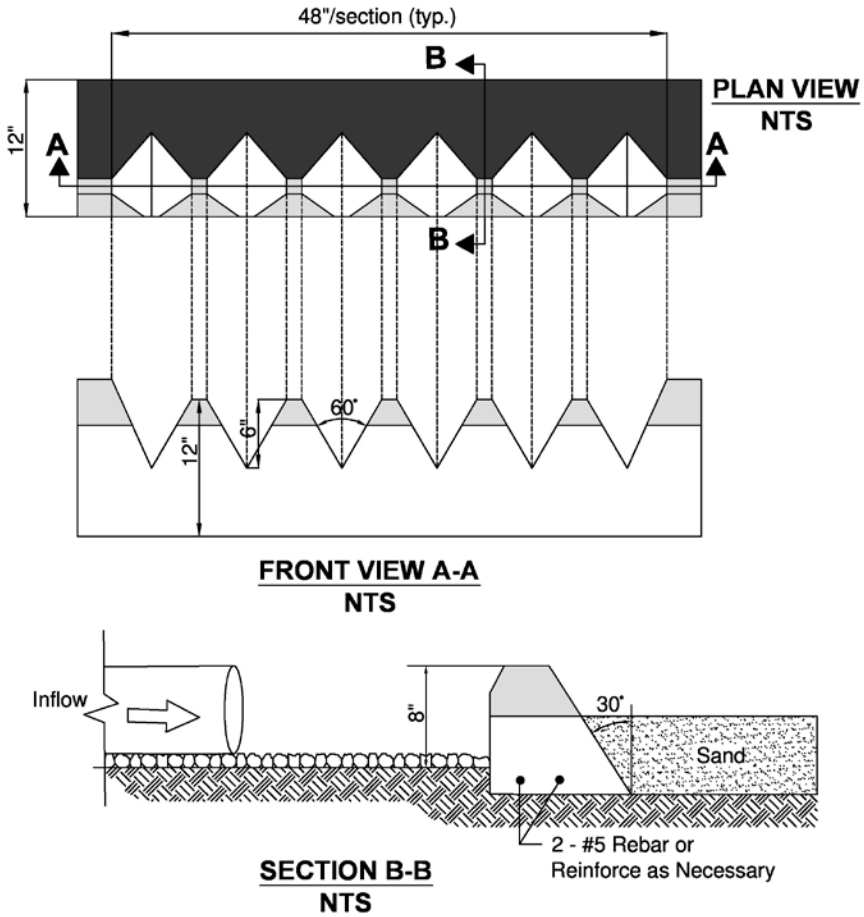

Figure 4.5.5 – Flow Spreader Option C: Notched Curb Spreader

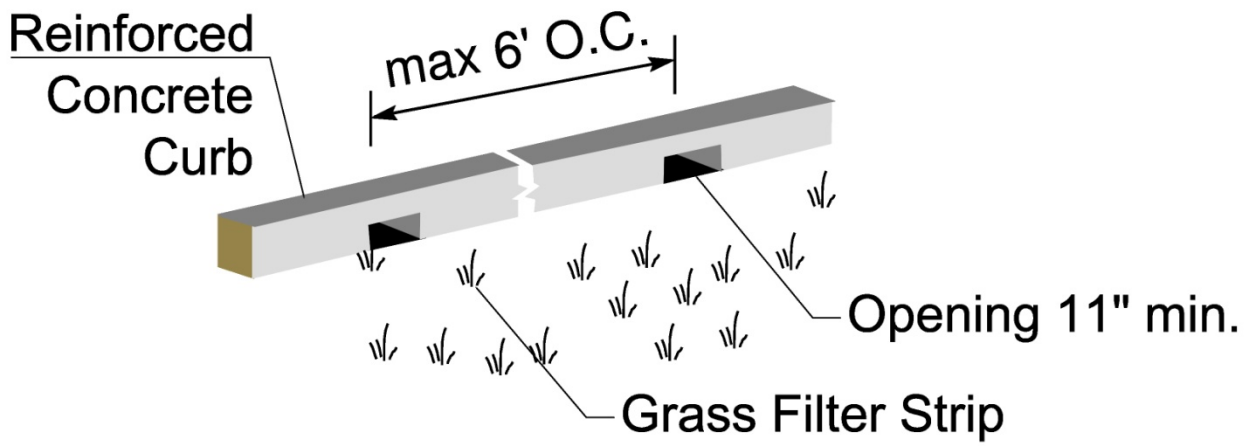

CURB PORT

NTS

Figure 4.5.6 – Flow Spreader Option D: Through-Curb Port

4.5.3 Outfall Systems

Properly designed outfalls are critical to reducing the chance of adverse impacts as the result of concentrated discharges from pipe systems and culverts, both on-site and downstream. Outfall systems include rock splash pads, flow dispersal trenches, gabion or other energy dissipaters, and tightline systems. A tightline system is typically a continuous length of pipe used to convey flows down a steep or sensitive slope with appropriate energy dissipation at the discharge end.

General Design Criteria

Provided below are general design criteria for both Outfall Features and Tightline Systems.

Outfall Features

At a minimum, all outfalls must be provided with a rock splash pad (see Figure 4.5.7) except as specified below and in Table 4.5.2:

- The flow dispersal trenches shown in Figures 4.5.8 and 4.5.9 should only be used when both criteria below are met:
  1. An outfall is necessary to disperse concentrated flows across uplands where no conveyance system exists and the natural (existing) discharge is unconcentrated; and
  2. The 100-year peak discharge rate is less than or equal to 0.5 cfs.
- For freshwater outfalls with a design velocity greater than 10 fps, a gabion dissipater or engineered energy dissipater may be required. There are many possible designs.

  Note The gabion outfall detail shown in Figure 4.5.10 is illustrative only. A design engineered to specific site conditions must be developed.
- Tightline systems may be needed to prevent aggravation or creation of a downstream erosion problem.
- In marine waters, rock splash pads and gabion structures are not recommended due to corrosion and destruction of the structure, particularly in high energy environments. Diffuser Tee structures, such as that depicted in Figure 4.5.11, are also not generally recommended in or above the intertidal zone. They may be acceptable in low bank or rock shoreline locations. Stilling basins or bubble-up structures are acceptable. Generally, tightlines trenched to extreme low water or dissipation of the discharge energy above the ordinary high water line are preferred. Outfalls below extreme low water may still need an energy dissipation device (e.g., a tee structure) to prevent nearby erosion.

- Engineered energy dissipaters, including stilling basins, drop pools, hydraulic jump basins, baffled aprons, and bucket aprons, are required for outfalls with design velocity greater than 20 fps. These should be designed using published or commonly known techniques found in such references as *Hydraulic Design of Energy Dissipaters for Culverts and Channels*, published by the Federal Highway Administration of the United States Department of Transportation; *Open Channel Flow*, by V.T. Chow; *Hydraulic Design of Stilling Basins and Energy Dissipaters*, EM 25, Bureau of Reclamation (1978); and other publications, such as those prepared by the Soil Conservation Service (now Natural Resource Conservation Service).
- Alternate mechanisms may be used, such as bubble-up structures that eventually drain and structures fitted with reinforced concrete posts. If any alternate mechanisms are to be considered, they should be designed using sound hydraulic principles and consideration of ease of construction and maintenance.
- Mechanisms that reduce velocity prior to discharge from an outfall are encouraged. Some of these are drop manholes and rapid expansion into pipes of much larger size. Other discharge end features may be used to dissipate the discharge energy. An example of an end feature is the use of a Diffuser Tee with holes in the front half, as shown in 4.5.11.

  Note: stormwater outfalls submerged in a marine environment can be subject to plugging due to biological growth and shifting debris and sediments. Therefore, unless intensive maintenance is regularly performed, they may not meet their designed function.
- New pipe outfalls can provide an opportunity for low-cost fish habitat improvements. For example, an alcove of low-velocity water can be created by constructing the pipe outfall and associated energy dissipater back from the stream edge and digging a channel, over widened to the upstream side, from the outfall to the stream (as shown in Figure 4.5.12). Overwintering juvenile and migrating adult salmonids may use the alcove as shelter during high flows. Potential habitat improvements should be discussed with the Washington Department of Fish and Wildlife biologist prior to inclusion in design.
- Bank stabilization, bioengineering and habitat features may be required for disturbed areas.
- Outfall structures should be located where they minimize impacts to fish, shellfish, and their habitats.
- One caution to note is that the in-stream sample gabion mattress energy dissipater may not be acceptable within the ordinary high water mark of fish-bearing waters or where gabions will be subject to abrasion from upstream channel sediments. A four-sided gabion basket

located outside the ordinary high water mark should be considered for these applications.

Note: A Hydraulic Project Approval (Chapter 77.55 RCW) and an Army Corps of Engineers permit may be required for any work within the ordinary high water mark. Other provisions of the RCW or the Hydraulics Code - Chapter 220-110 WAC may also apply. Contact the appropriate regional office of the State Department of Fish and Wildlife.

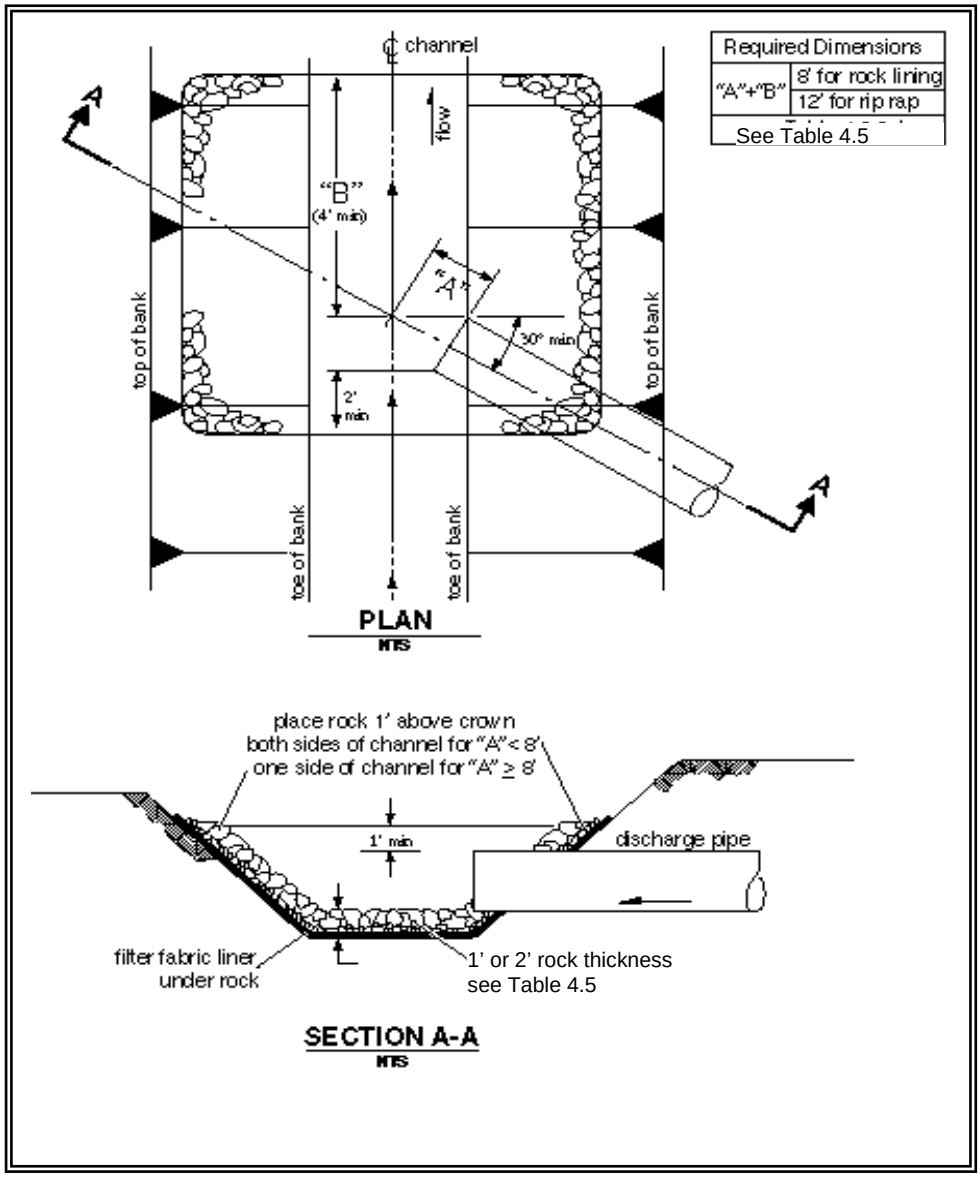

Figure 4.5.7 – Pipe/Culvert Outfall Discharge Protection

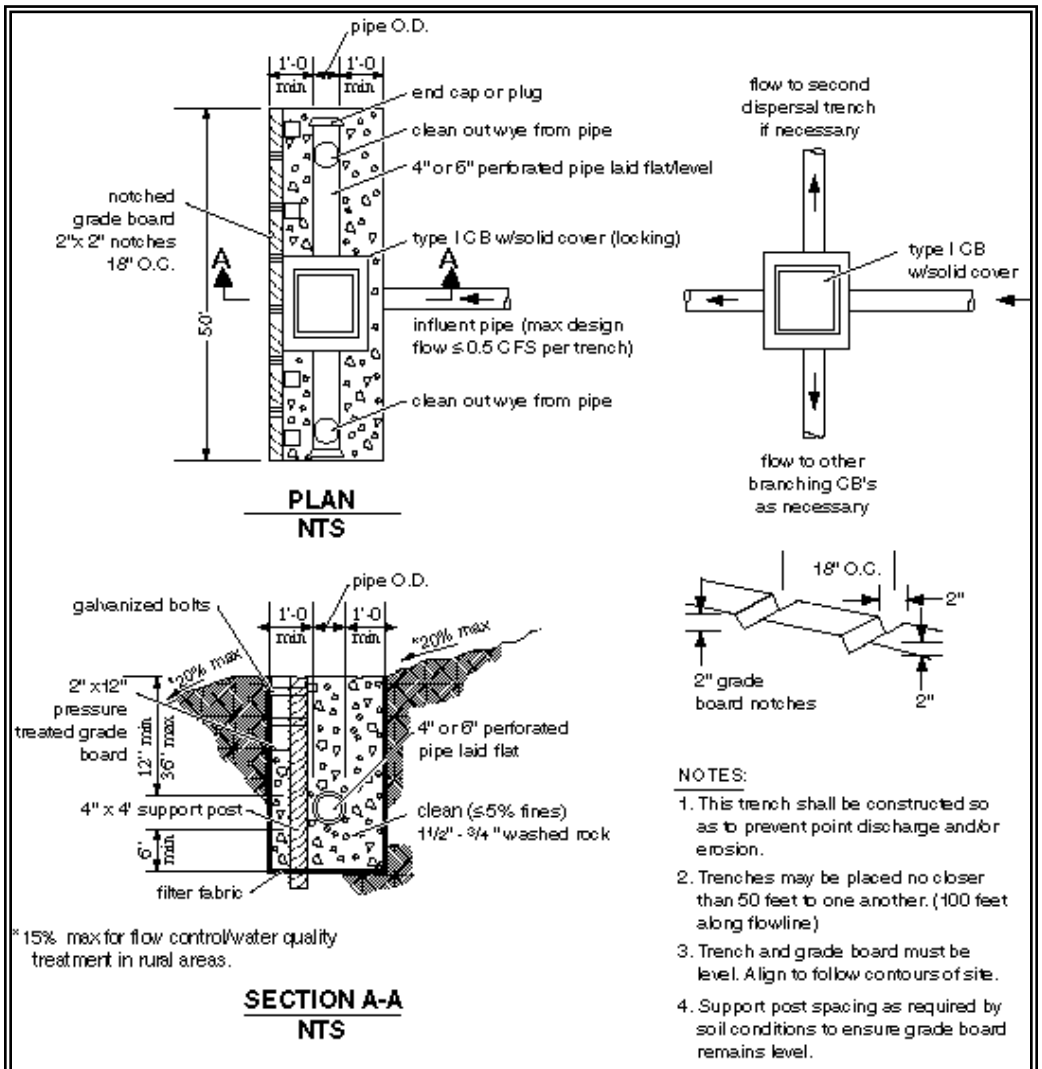

Figure 4.5.8 – Flow Dispersal Trench

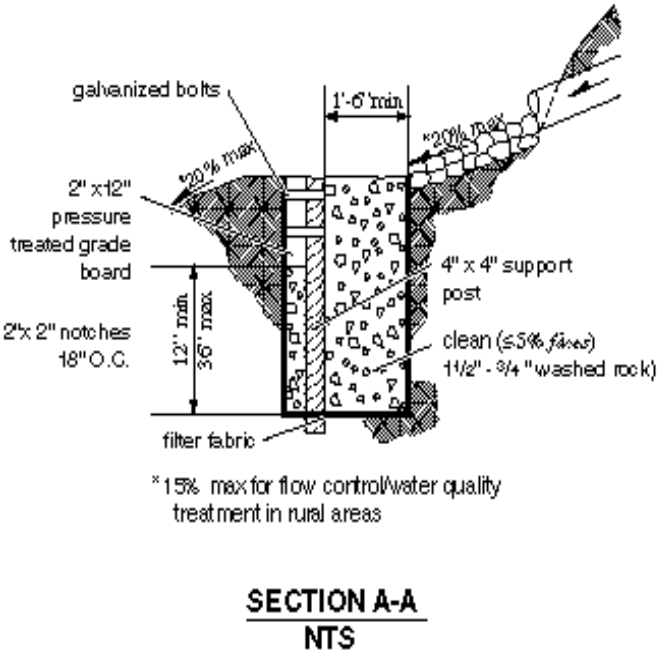

NOTES:

1. This trench shall be constructed so as to prevent point discharge and/or erosion.
2. Trenches may be placed no closer than 50 feet to one another. (100 feet along flowline)
3. Trench and grade board must be level. Align to follow contours of site.
4. Support post spacing as required by soil conditions to ensure grade board remains level.

Figure 4.5.9 – Alternative Flow Dispersal Trench

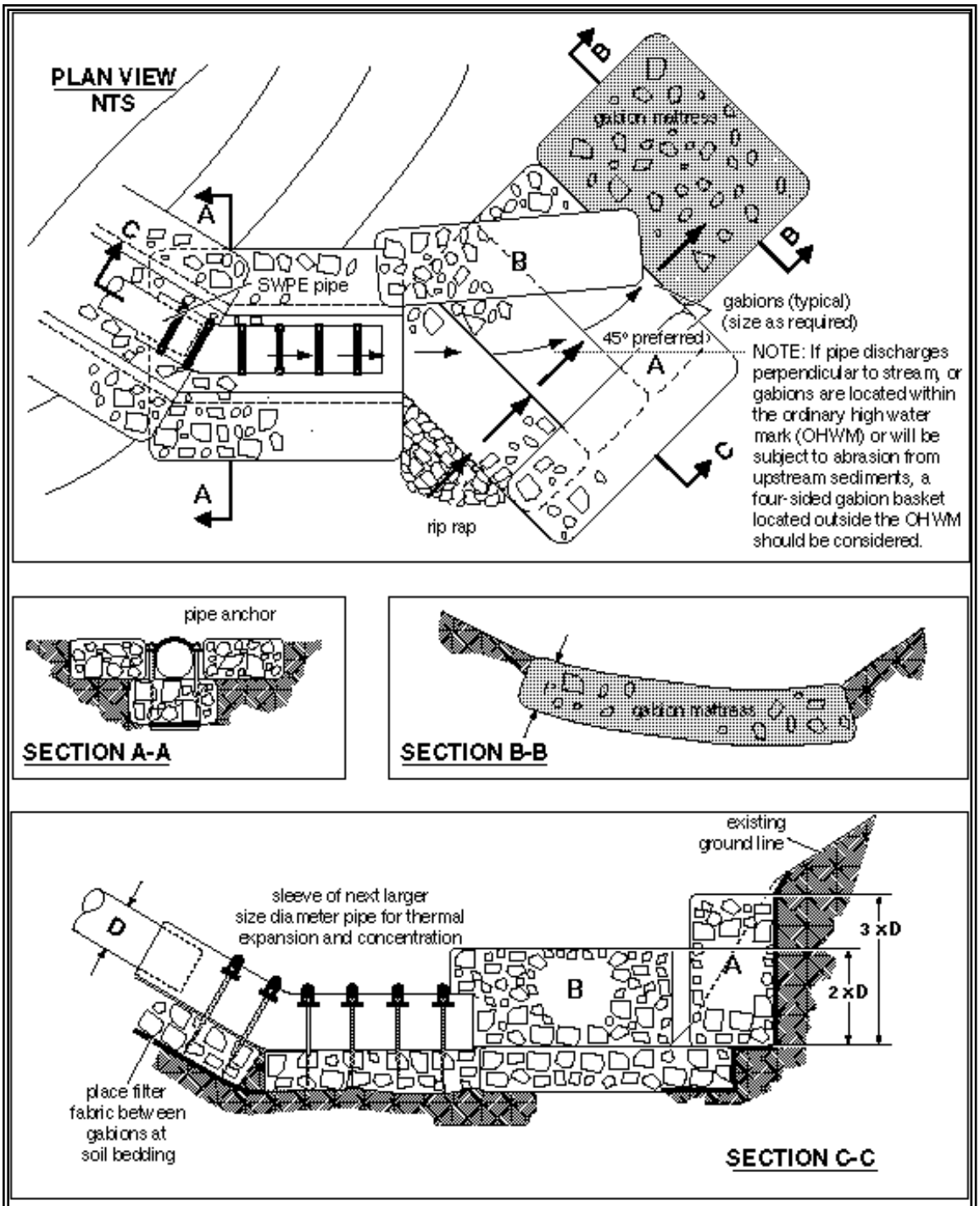

Figure 4.5.10 – Gabion Outfall Detail

Tightline Systems

- Outfall tightlines may be installed in trenches with standard bedding on slopes up to 20%. In order to minimize disturbance to slopes greater than 20%, it is recommended that tightlines be placed at grade with proper pipe anchorage and support.
- Except as indicated above, tightlines or conveyances that traverse the marine intertidal zone and connect to outfalls must be buried to a depth sufficient to avoid exposure of the line during storm events or future changes in beach elevation. If non-native material is used to bed the tightline, such material shall be covered with at least 3 feet of native bed material or equivalent.
- High density polyethylene pipe (HDPP) tightlines must be designed to address the material limitations, particularly thermal expansion and contraction and pressure design, as specified by the manufacturer. The coefficient of thermal expansion and contraction for solid wall polyethylene pipe (SWPE) is on the order of 0.001 inch per foot per Fahrenheit degree. Sliding sleeve connections must be used to address this thermal expansion and contraction. These sleeve connections consist of a section of the appropriate length of the next larger size diameter of pipe into which the outfall pipe is fitted. These sleeve connections must be located as close to the discharge end of the outfall system as is practical.
- Due to the ability of HDPP tightlines to transmit flows of very high energy, special consideration for energy dissipation must be made. Details of a sample gabion mattress energy dissipater have been provided as Figure 4.5.10. Flows of very high energy will require a specifically engineered energy dissipater structure.

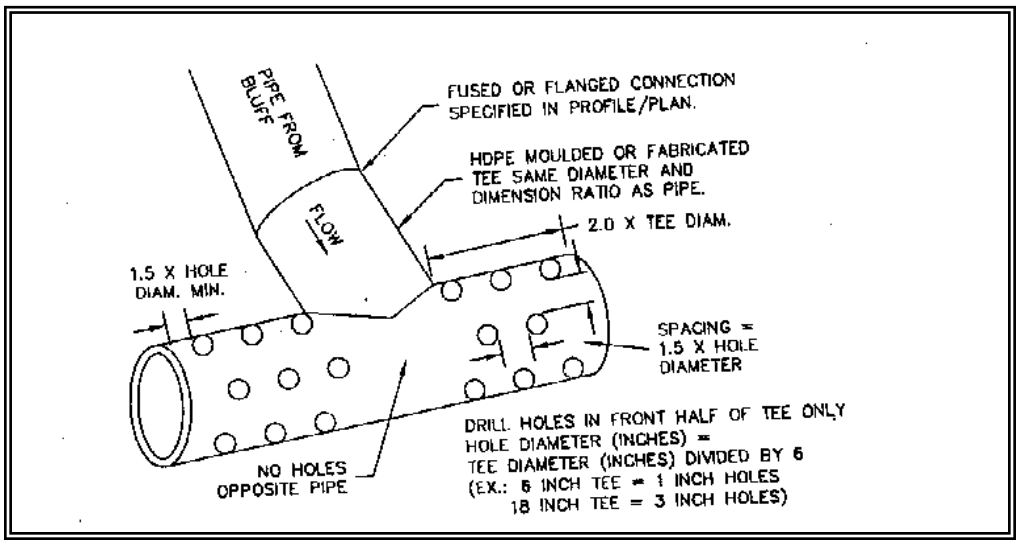

Figure 4.5.11 – Diffuser TEE (an example of energy dissipating end feature)

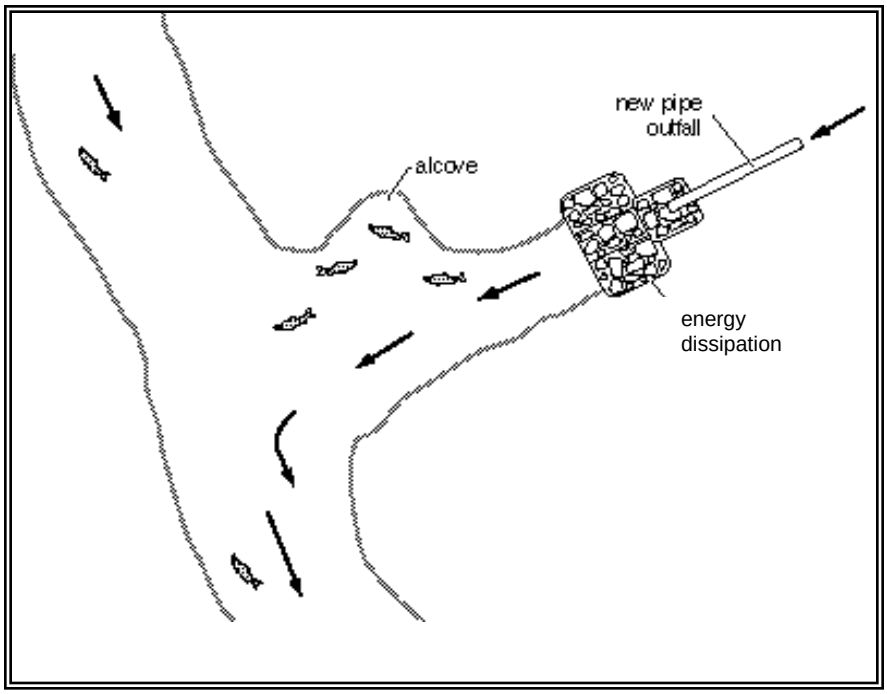

Figure 4.5.12 – Fish Habitat Improvement at New Outfalls

4.6 Maintenance Standards for Drainage Facilities

The facility-specific maintenance standards contained in this section are intended to be conditions for determining if maintenance actions are required as identified through inspection. They are not intended to be measures of the facility's required condition at all times between inspections. In other words, exceedence of these conditions at any time between inspections and/or maintenance does not automatically constitute a violation of these standards. However, based upon inspection observations, the inspection and maintenance schedules shall be adjusted to minimize the length of time that a facility is in a condition that requires a maintenance action.

Table 4.5.2 Maintenance Standards

No. 1 – Detention Ponds

Maintenance Component	Defect	Conditions When Maintenance Is Needed	Results Expected When Maintenance Is Performed
General	Trash & Debris	Any trash and debris which exceed 1 cubic feet per 1,000 square feet. In general, there should be no visual evidence of dumping. If less than threshold all trash and debris will be removed as part of next scheduled maintenance.	Trash and debris cleared from site.
	Poisonous Vegetation and noxious weeds	Any poisonous or nuisance vegetation which may constitute a hazard to maintenance personnel or the public. Any evidence of noxious weeds as defined by State or local regulations. (Apply requirements of adopted IPM policies for the use of herbicides).	No danger of poisonous vegetation where maintenance personnel or the public might normally be. (Coordinate with local health department) Complete eradication of noxious weeds may not be possible. Compliance with State or local eradication policies required
	Contaminants and Pollution	Any evidence of oil, gasoline, contaminants or other pollutants (Coordinate removal/cleanup with local water quality response agency).	~~No contaminants or pollutants present.~~
	Rodent Holes	Any evidence of rodent holes if facility is acting as a dam or berm, or any evidence of water piping through dam or berm via rodent holes.	Rodents destroyed and dam or berm repaired. (Coordinate with local health department; coordinate with Ecology Dam Safety Office if pond exceeds 10 acre-feet.)

No. 1 – Detention Ponds

Maintenance Component	Defect	Conditions When Maintenance Is Needed	Results Expected When Maintenance Is Performed
	Beaver Dams	Dam results in change or function of the facility.	Facility is returned to design function. (Coordinate trapping of beavers and removal of dams with appropriate permitting agencies)
	Insects	When insects such as wasps and hornets interfere with maintenance activities.	Insects destroyed or removed from site. Apply insecticides in compliance with adopted IPM policies
	Tree Growth and Hazard Trees	Tree growth does not allow maintenance access or interferes with maintenance activity (i.e., slope mowing, silt removal, vactoring, or equipment movements). If trees are not interfering with access or maintenance, do not remove If dead, diseased, or dying trees are identified (Use a certified Arborist to determine health of tree or removal requirements)	Trees do not hinder maintenance activities. Harvested trees should be recycled into mulch or other beneficial uses (e.g., alders for firewood). Remove hazard Trees
Side Slopes of Pond	Erosion	Eroded damage over 2 inches deep where cause of damage is still present or where there is potential for continued erosion. Any erosion observed on a compacted berm embankment.	Slopes should be stabilized using appropriate erosion control measure(s); e.g., rock reinforcement, planting of grass, compaction. If erosion is occurring on compacted berms a licensed civil engineer should be consulted to resolve source of erosion.
Storage Area	Sediment	Accumulated sediment that exceeds 10% of the designed pond depth unless otherwise specified or affects inletting or outletting condition of the facility.	Sediment cleaned out to designed pond shape and depth; pond reseeded if necessary to control erosion.
	Liner (If Applicable)	Liner is visible and has more than three 1/4-inch holes in it.	Liner repaired or replaced. Liner is fully covered.
Pond Berms (Dikes)	Settlements	Any part of berm which has settled 4 inches lower than the design elevation. If settlement is apparent, measure berm to determine amount of settlement. Settling can be an indication of more severe problems with the berm or outlet works. A licensed civil engineer should be consulted to determine the source of the settlement.	Dike is built back to the design elevation.
	Piping	Discernable water flow through pond berm. Ongoing erosion with potential for erosion to continue. (Recommend a Goethechnical engineer be called in to inspect and evaluate condition and recommend repair of condition.	Piping eliminated. Erosion potential resolved.

No. 1 – Detention Ponds

Maintenance Component	Defect	Conditions When Maintenance Is Needed	Results Expected When Maintenance Is Performed
Emergency Overflow/ Spillway and Berms over 4 feet in height.	Tree Growth	Tree growth on emergency spillways creates blockage problems and may cause failure of the berm due to uncontrolled overtopping. Tree growth on berms over 4 feet in height may lead to piping through the berm which could lead to failure of the berm.	Trees should be removed. If root system is small (base less than 4 inches) the root system may be left in place. Otherwise the roots should be removed and the berm restored. A licensed civil engineer should be consulted for proper berm/spillway restoration.
	Piping	Discernable water flow through pond berm. Ongoing erosion with potential for erosion to continue. (Recommend a Goethechnical engineer be called in to inspect and evaluate condition and recommend repair of condition.	Piping eliminated. Erosion potential resolved.
Emergency Overflow/ Spillway	Emergency Overflow/ Spillway	Only one layer of rock exists above native soil in area five square feet or larger, or any exposure of native soil at the top of out flow path of spillway. (Rip-rap on inside slopes need not be replaced.)	Rocks and pad depth are restored to design standards.
	Erosion	See “Side Slopes of Pond”	

No. 2 – Infiltration

Maintenance Component	Defect	Conditions When Maintenance Is Needed	Results Expected When Maintenance Is Performed
General	Trash & Debris	See "Detention Ponds" (No. 1).	See "Detention Ponds" (No. 1).
	Poisonous/Noxious Vegetation	See "Detention Ponds" (No. 1).	See "Detention Ponds" (No. 1).
	Contaminants and Pollution	See "Detention Ponds" (No. 1).	See "Detention Ponds" (No. 1).
	Rodent Holes	See "Detention Ponds" (No. 1).	See "Detention Ponds" (No. 1)
Storage Area	Sediment	Water ponding in infiltration pond after rainfall ceases and appropriate time allowed for infiltration. Treatment basins should infiltrate Water Quality Design Storm Volume within 48 hours, and empty within 24 hours after cessation of most rain events. (A percolation test pit or test of facility indicates facility is only working at 90% of its designed capabilities. Test every 2 to 5 years. If two inches or more sediment is present, remove).	Sediment is removed and/or facility is cleaned so that infiltration system works according to design.
Filter Bags (if applicable)	Filled with Sediment and Debris	Sediment and debris fill bag more than 1/2 full.	Filter bag is replaced or system is redesigned.
Rock Filters	Sediment and Debris	By visual inspection, little or no water flows through filter during heavy rain storms.	Gravel in rock filter is replaced.
Side Slopes of Pond	Erosion	See "Detention Ponds" (No. 1).	See "Detention Ponds" (No. 1).
Emergency Overflow Spillway and Berms over 4 feet in height.	Tree Growth	See "Detention Ponds" (No. 1).	See "Detention Ponds" (No. 1).
	Piping	See "Detention Ponds" (No. 1).	See "Detention Ponds" (No. 1).
Emergency Overflow Spillway	Rock Missing	See "Detention Ponds" (No. 1).	See "Detention Ponds" (No. 1).
	Erosion	See "Detention Ponds" (No. 1).	See "Detention Ponds" (No. 1).
Pre-settling Ponds and Vaults	Facility or sump filled with Sediment and/or debris	6" or designed sediment trap depth of sediment.	Sediment is removed.

No. 3 – Closed Detention Systems (Tanks/Vaults)

Maintenance Component	Defect	Conditions When Maintenance is Needed	Results Expected When Maintenance is Performed
Storage Area	Plugged Air Vents	One-half of the cross section of a vent is blocked at any point or the vent is damaged.	Vents open and functioning.
	Debris and Sediment	Accumulated sediment depth exceeds 10% of the diameter of the storage area for 1/2 length of storage vault or any point depth exceeds 15% of diameter. (Example: 72-inch storage tank would require cleaning when sediment reaches depth of 7 inches for more than 1/2 length of tank.)	All sediment and debris removed from storage area.
	Joints Between Tank/Pipe Section	Any openings or voids allowing material to be transported into facility. (Will require engineering analysis to determine structural stability).	All joint between tank/pipe sections are sealed.
	Tank Pipe Bent Out of Shape	Any part of tank/pipe is bent out of shape more than 10% of its design shape. (Review required by engineer to determine structural stability).	Tank/pipe repaired or replaced to design.
	Vault Structure Includes Cracks in Wall, Bottom, Damage to Frame and/or Top Slab	Cracks wider than 1/2-inch and any evidence of soil particles entering the structure through the cracks, or maintenance/inspection personnel determines that the vault is not structurally sound. Cracks wider than 1/2-inch at the joint of any inlet/outlet pipe or any evidence of soil particles entering the vault through the walls.	Vault replaced or repaired to design specifications and is structurally sound. No cracks more than 1/4-inch wide at the joint of the inlet/outlet pipe.
Manhole	Cover Not in Place	Cover is missing or only partially in place. Any open manhole requires maintenance.	Manhole is closed.
	Locking Mechanism Not Working	Mechanism cannot be opened by one maintenance person with proper tools. Bolts into frame have less than 1/2 inch of thread (may not apply to self-locking lids).	Mechanism opens with proper tools.
	Cover Difficult to Remove	One maintenance person cannot remove lid after applying normal lifting pressure. Intent is to keep cover from sealing off access to maintenance.	Cover can be removed and reinstalled by one maintenance person.
	Ladder Rungs Unsafe	Ladder is unsafe due to missing rungs, misalignment, not securely attached to structure wall, rust, or cracks.	Ladder meets design standards. Allows maintenance person safe access.
Catch Basins	See “Catch Basins” (No. 5)	See “Catch Basins” (No. 5).	See “Catch Basins” (No. 5).

No. 4 – Control Structure/Flow Restrictor

Maintenance Component	Defect	Condition When Maintenance is Needed	Results Expected When Maintenance is Performed
General	Trash and Debris (Includes Sediment)	Material exceeds 25% of sump depth or 1 foot below orifice plate.	Control structure orifice is not blocked. All trash and debris removed.
	Structural Damage	Structure is not securely attached to manhole wall.	Structure securely attached to wall and outlet pipe.
		Structure is not in upright position (allow up to 10% from plumb).	Structure in correct position.
		Connections to outlet pipe are not watertight and show signs of rust.	Connections to outlet pipe are water tight; structure repaired or replaced and works as designed.
		Any holes--other than designed holes--in the structure.	Structure has no holes other than designed holes.
Cleanout Gate	Damaged or Missing	Cleanout gate is not watertight or is missing.	Gate is watertight and works as designed.
		Gate cannot be moved up and down by one maintenance person.	Gate moves up and down easily and is watertight.
		Chain/rod leading to gate is missing or damaged.	Chain is in place and works as designed.
		Gate is rusted over 50% of its surface area.	Gate is repaired or replaced to meet design standards.
Orifice Plate	Damaged or Missing	Control device is not working properly due to missing, out of place, or bent orifice plate.	Plate is in place and works as designed.
	Obstructions	Any trash, debris, sediment, or vegetation blocking the plate.	Plate is free of all obstructions and works as designed.
Overflow Pipe	Obstructions	Any trash or debris blocking (or having the potential of blocking) the overflow pipe.	Pipe is free of all obstructions and works as designed.
Manhole	See “Closed Detention Systems” (No. 3).	See “Closed Detention Systems” (No. 3).	See “Closed Detention Systems” (No. 3).
Catch Basin	See “Catch Basins” (No. 5).	See “Catch Basins” (No. 5).	See “Catch Basins” (No. 5).

No. 5 – Catch Basins

Maintenance Component	Defect	Conditions When Maintenance is Needed	Results Expected When Maintenance is performed
General	Trash & Debris	Trash or debris which is located immediately in front of the catch basin opening or is blocking inletting capacity of the basin by more than 10%.	No Trash or debris located immediately in front of catch basin or on grate opening.
		Trash or debris (in the basin) that exceeds 60 percent of the sump depth as measured from the bottom of basin to invert of the lowest pipe into or out of the basin, but in no case less than a minimum of six inches clearance from the debris surface to the invert of the lowest pipe.	No trash or debris in the catch basin.
		Trash or debris in any inlet or outlet pipe blocking more than 1/3 of its height.	Inlet and outlet pipes free of trash or debris.
		Dead animals or vegetation that could generate odors that could cause complaints or dangerous gases (e.g., methane).	No dead animals or vegetation present within the catch basin.
	Sediment	Sediment (in the basin) that exceeds 60 percent of the sump depth as measured from the bottom of basin to invert of the lowest pipe into or out of the basin, but in no case less than a minimum of 6 inches clearance from the sediment surface to the invert of the lowest pipe.	No sediment in the catch basin
	Structure Damage to Frame and/or Top Slab	Top slab has holes larger than 2 square inches or cracks wider than 1/4 inch (Intent is to make sure no material is running into basin).	Top slab is free of holes and cracks.
		Frame not sitting flush on top slab, i.e., separation of more than 3/4 inch of the frame from the top slab. Frame not securely attached	Frame is sitting flush on the riser rings or top slab and firmly attached.
	Fractures or Cracks in Basin Walls/ Bottom	Maintenance person judges that structure is unsound.	Basin replaced or repaired to design standards.
		Grout fillet has separated or cracked wider than 1/2 inch and longer than 1 foot at the joint of any inlet/outlet pipe or any evidence of soil particles entering catch basin through cracks.	Pipe is regrouted and secure at basin wall.
	Settlement/ Misalignment	If failure of basin has created a safety, function, or design problem.	Basin replaced or repaired to design standards.
	Vegetation	Vegetation growing across and blocking more than 10% of the basin opening.	No vegetation blocking opening to basin.
		Vegetation growing in inlet/outlet pipe joints that is more than six inches tall and less than six inches apart.	No vegetation or root growth present.
	Contamination and Pollution	See "Detention Ponds" (No. 1).	No pollution present.

No. 5 – Catch Basins

Maintenance Component	Defect	Conditions When Maintenance is Needed	Results Expected When Maintenance is performed
Catch Basin Cover	Cover Not in Place	Cover is missing or only partially in place. Any open catch basin requires maintenance.	Catch basin cover is closed
	Locking Mechanism Not Working	Mechanism cannot be opened by one maintenance person with proper tools. Bolts into frame have less than 1/2 inch of thread.	Mechanism opens with proper tools.
	Cover Difficult to Remove	One maintenance person cannot remove lid after applying normal lifting pressure. (Intent is keep cover from sealing off access to maintenance.)	Cover can be removed by one maintenance person.
Ladder	Ladder Rungs Unsafe	Ladder is unsafe due to missing rungs, not securely attached to basin wall, misalignment, rust, cracks, or sharp edges.	Ladder meets design standards and allows maintenance person safe access.
Metal Grates (If Applicable)	Grate opening Unsafe	Grate with opening wider than 7/8 inch.	Grate opening meets design standards.
	Trash and Debris	Trash and debris that is blocking more than 20% of grate surface inletting capacity.	Grate free of trash and debris.
	Damaged or Missing.	Grate missing or broken member(s) of the grate.	Grate is in place and meets design standards.

No. 6 – Debris Barriers (e.g., Trash Racks)

Maintenance Components	Defect	Condition When Maintenance is Needed	Results Expected When Maintenance is Performed
General	Trash and Debris	Trash or debris that is plugging more than 20% of the openings in the barrier.	Barrier cleared to design flow capacity.
Metal	Damaged/ Missing Bars.	Bars are bent out of shape more than 3 inches.	Bars in place with no bends more than 3/4 inch.
		Bars are missing or entire barrier missing.	Bars in place according to design.
		Bars are loose and rust is causing 50% deterioration to any part of barrier.	Barrier replaced or repaired to design standards.
	Inlet/Outlet Pipe	Debris barrier missing or not attached to pipe	Barrier firmly attached to pipe

No. 7 – Energy Dissipaters

Maintenance Components	Defect	Conditions When Maintenance is Needed	Results Expected When Maintenance is Performed
External:			
Rock Pad	Missing or Moved Rock	Only one layer of rock exists above native soil in area five square feet or larger, or any exposure of native soil.	Rock pad replaced to design standards.
	Erosion	Soil erosion in or adjacent to rock pad.	Rock pad replaced to design standards.
Dispersion Trench	Pipe Plugged with Sediment	Accumulated sediment that exceeds 20% of the design depth.	Pipe cleaned/flushed so that it matches design.
	Not Discharging Water Properly	Visual evidence of water discharging at concentrated points along trench (normal condition is a "sheet flow" of water along trench). Intent is to prevent erosion damage.	Trench redesigned or rebuilt to standards.
	Perforations Plugged.	Over 1/2 of perforations in pipe are plugged with debris and sediment.	Perforated pipe cleaned or replaced.
	Water Flows Out Top of "Distributor" Catch Basin.	Maintenance person observes or receives credible report of water flowing out during any storm less than the design storm or its causing or appears likely to cause damage.	Facility rebuilt or redesigned to standards.
	Receiving Area Over-Saturated	Water in receiving area is causing or has potential of causing landslide problems.	No danger of landslides.
Internal:			
Manhole/Chamber	Worn or Damaged Post, Baffles, Side of Chamber	Structure dissipating flow deteriorates to 1/2 of original size or any concentrated worn spot exceeding one square foot which would make structure unsound.	Structure replaced to design standards.
	Other Defects	See "Catch Basins" (No. 5).	See "Catch Basins" (No. 5).

No. 8 – Typical Biofiltration Swale

Maintenance Component	Defect or Problem	Condition When Maintenance is Needed	Recommended Maintenance to Correct Problem
General	Sediment Accumulation on Grass	Sediment depth exceeds 2 inches.	Remove sediment deposits on grass treatment area of the bio-swale. When finished, swale should be level from side to side and drain freely toward outlet. There should be no areas of standing water once inflow has ceased.
	Standing Water	When water stands in the swale between storms and does not drain freely.	Any of the following may apply: remove sediment or trash blockages, improve grade from head to foot of swale, remove clogged check dams, add underdrains or convert to a wet biofiltration swale.
	Flow spreader	Flow spreader uneven or clogged so that flows are not uniformly distributed through entire swale width.	Level the spreader and clean so that flows are spread evenly over entire swale width.
	Constant Baseflow	When small quantities of water continually flow through the swale, even when it has been dry for weeks, and an eroded, muddy channel has formed in the swale bottom.	Add a low-flow pea-gravel drain the length of the swale or by-pass the baseflow around the swale.
	Poor Vegetation Coverage	When grass is sparse or bare or eroded patches occur in more than 10% of the swale bottom.	Determine why grass growth is poor and correct that condition. Re-plant with plugs of grass from the upper slope: plant in the swale bottom at 8-inch intervals. Or re-seed into loosened, fertile soil.
	Vegetation	When the grass becomes excessively tall (greater than 10-inches); when nuisance weeds and other vegetation starts to take over.	Mow vegetation or remove nuisance vegetation so that flow not impeded. Grass should be mowed to a height of 3 to 4 inches. Remove grass clippings.
	Excessive Shading	Grass growth is poor because sunlight does not reach swale.	If possible, trim back over-hanging limbs and remove brushy vegetation on adjacent slopes.
	Inlet/Outlet	Inlet/outlet areas clogged with sediment and/or debris.	Remove material so that there is no clogging or blockage in the inlet and outlet area.
	Trash and Debris Accumulation	Trash and debris accumulated in the bio-swale.	Remove trash and debris from bioswale.
	Erosion/Scouring	Eroded or scoured swale bottom due to flow channelization, or higher flows.	For ruts or bare areas less than 12 inches wide, repair the damaged area by filling with crushed gravel. If bare areas are large, generally greater than 12 inches wide, the swale should be re-graded and re-seeded. For smaller bare areas, overseed when bare spots are evident, or take plugs of grass from the upper slope and plant in the swale bottom at 8-inch intervals.

No. 9 – Wet Biofiltration Swale

Maintenance Component	Defect or Problem	Condition When Maintenance is Needed	Recommended Maintenance to Correct Problem
General	Sediment Accumulation	Sediment depth exceeds 2-inches in 10% of the swale treatment area.	Remove sediment deposits in treatment area.
	Water Depth	Water not retained to a depth of about 4 inches during the wet season.	Build up or repair outlet berm so that water is retained in the wet swale.
	Wetland Vegetation	Vegetation becomes sparse and does not provide adequate filtration, OR vegetation is crowded out by very dense clumps of cattail, which do not allow water to flow through the clumps.	Determine cause of lack of vigor of vegetation and correct. Replant as needed. For excessive cattail growth, cut cattail shoots back and compost off-site. Note: normally wetland vegetation does not need to be harvested unless die-back is causing oxygen depletion in downstream waters.
	Inlet/Outlet	Inlet/outlet area clogged with sediment and/or debris.	Remove clogging or blockage in the inlet and outlet areas.
	Trash and Debris Accumulation	See "Detention Ponds" (No. 1).	Remove trash and debris from wet swale.
	Erosion/Scouring	Swale has eroded or scoured due to flow channelization, or higher flows.	Check design flows to assure swale is large enough to handle flows. By-pass excess flows or enlarge swale. Replant eroded areas with fibrous-rooted plants such as Juncus effusus (soft rush) in wet areas or snowberry (Symphoricarpos albus) in dryer areas.

No. 10 – Filter Strips

Maintenance Component	Defect or Problem	Condition When Maintenance is Needed	Recommended Maintenance to Correct Problem
General	Sediment Accumulation on Grass	Sediment depth exceeds 2 inches.	Remove sediment deposits, re-level so slope is even and flows pass evenly through strip.
	Vegetation	When the grass becomes excessively tall (greater than 10-inches); when nuisance weeds and other vegetation starts to take over.	Mow grass, control nuisance vegetation, such that flow not impeded. Grass should be mowed to a height between 3-4 inches.
	Trash and Debris Accumulation	Trash and debris accumulated on the filter strip.	Remove trash and Debris from filter.
	Erosion/Scouring	Eroded or scoured areas due to flow channelization, or higher flows.	For ruts or bare areas less than 12 inches wide, repair the damaged area by filling with crushed gravel. The grass will creep in over the rock in time. If bare areas are large, generally greater than 12 inches wide, the filter strip should be re-graded and re-seeded. For smaller bare areas, overseed when bare spots are evident.
	Flow spreader	Flow spreader uneven or clogged so that flows are not uniformly distributed through entire filter width.	Level the spreader and clean so that flows are spread evenly over entire filter width.

No. 11 – Wetponds

Maintenance Component	Defect	Condition When Maintenance is Needed	Results Expected When Maintenance is Performed
General	Water level	First cell is empty, doesn't hold water.	Line the first cell to maintain at least 4 feet of water. Although the second cell may drain, the first cell must remain full to control turbulence of the incoming flow and reduce sediment resuspension.
	Trash and Debris	Accumulation that exceeds 1 CF per 1000-SF of pond area.	Trash and debris removed from pond.
	Inlet/Outlet Pipe	Inlet/Outlet pipe clogged with sediment and/or debris material.	No clogging or blockage in the inlet and outlet piping.
	Sediment Accumulation in Pond Bottom	Sediment accumulations in pond bottom that exceeds the depth of sediment zone plus 6-inches, usually in the first cell.	Sediment removed from pond bottom.
	Oil Sheen on Water	Prevalent and visible oil sheen.	Oil removed from water using oil-absorbent pads or vactor truck. Source of oil located and corrected. If chronic low levels of oil persist, plant wetland plants such as Juncus effusus (soft rush) which can uptake small concentrations of oil.
	Erosion	Erosion of the pond's side slopes and/or scouring of the pond bottom, that exceeds 6-inches, or where continued erosion is prevalent.	Slopes stabilized using proper erosion control measures and repair methods.
	Settlement of Pond Dike/Berm	Any part of these components that has settled 4-inches or lower than the design elevation, or inspector determines dike/berm is unsound.	Dike/berm is repaired to specifications.
	Internal Berm	Berm dividing cells should be level.	Berm surface is leveled so that water flows evenly over entire length of berm.
	Overflow Spillway	Rock is missing and soil is exposed at top of spillway or outside slope.	Rocks replaced to specifications.

No. 12 – Wetvaults

Maintenance Component	Defect	Condition When Maintenance is Needed	Results Expected When Maintenance is Performed
General	Trash/Debris Accumulation	Trash and debris accumulated in vault, pipe or inlet/outlet (includes floatables and non-floatables).	Remove trash and debris from vault.
	Sediment Accumulation in Vault	Sediment accumulation in vault bottom exceeds the depth of the sediment zone plus 6-inches.	Remove sediment from vault.
	Damaged Pipes	Inlet/outlet piping damaged or broken and in need of repair.	Pipe repaired and/or replaced.
	Access Cover Damaged/Not Working	Cover cannot be opened or removed, especially by one person.	Pipe repaired or replaced to proper working specifications.
	Ventilation	Ventilation area blocked or plugged.	Blocking material removed or cleared from ventilation area. A specified % of the vault surface area must provide ventilation to the vault interior (see design specifications).
	Vault Structure Damage - Includes Cracks in Walls Bottom, Damage to Frame and/or Top Slab	Maintenance/inspection personnel determine that the vault is not structurally sound.	Vault replaced or repairs made so that vault meets design specifications and is structurally sound.
		Cracks wider than 1/2-inch at the joint of any inlet/outlet pipe or evidence of soil particles entering through the cracks.	Vault repaired so that no cracks exist wider than 1/4-inch at the joint of the inlet/outlet pipe.
	Baffles	Baffles corroding, cracking, warping and/or showing signs of failure as determined by maintenance/inspection staff.	Baffles repaired or replaced to specifications.
	Access Ladder Damage	Ladder is corroded or deteriorated, not functioning properly, not attached to structure wall, missing rungs, has cracks and/or misaligned. Confined space warning sign missing.	Ladder replaced or repaired to specifications, and is safe to use as determined by inspection personnel. Replace sign warning of confined space entry requirements. Ladder and entry notification complies with OSHA standards.

No. 13 – Sand Filters (above ground/open)

Maintenance Component	Defect	Condition When Maintenance is Needed	Results Expected When Maintenance is Performed
Above Ground (open sand filter)	Sediment Accumulation on top layer	Sediment depth exceeds 1/2-inch.	No sediment deposit on grass layer of sand filter that would impede permeability of the filter section.
	Trash and Debris Accumulations	Trash and debris accumulated on sand filter bed.	Trash and debris removed from sand filter bed.
	Sediment/ Debris in Clean-Outs	When the clean-outs become full or partially plugged with sediment and/or debris.	Sediment removed from clean-outs.
	Sand Filter Media	Drawdown of water through the sand filter media takes longer than 24-hours, and/or flow through the overflow pipes occurs frequently.	Top several inches of sand are scraped. May require replacement of entire sand filter depth depending on extent of plugging (a sieve analysis is helpful to determine if the lower sand has too high a proportion of fine material).
	Prolonged Flows	Sand is saturated for prolonged periods of time (several weeks) and does not dry out between storms due to continuous base flow or prolonged flows from detention facilities.	Low, continuous flows are limited to a small portion of the facility by using a low wooden divider or slightly depressed sand surface.
	Short Circuiting	When flows become concentrated over one section of the sand filter rather than dispersed.	Flow and percolation of water through sand filter is uniform and dispersed across the entire filter area.
	Erosion Damage to Slopes	Erosion over 2-inches deep where cause of damage is prevalent or potential for continued erosion is evident.	Slopes stabilized using proper erosion control measures.
	Rock Pad Missing or Out of Place	Soil beneath the rock is visible.	Rock pad replaced or rebuilt to design specifications.
	Flow Spreader	Flow spreader uneven or clogged so that flows are not uniformly distributed across sand filter.	Spreader leveled and cleaned so that flows are spread evenly over sand filter.
	Damaged Pipes	Any part of the piping that is crushed or deformed more than 20% or any other failure to the piping.	Pipe repaired or replaced.

No. 14 –Sand Filters (below ground/enclosed)

Maintenance Component	Defect	Condition When Maintenance is Needed	Results Expected When Maintenance is Performed
Below Ground Vault.	Sediment Accumulation on Sand Media Section	Sediment depth exceeds 1/2-inch.	No sediment deposits on sand filter section that which would impede permeability of the filter section.
	Sediment Accumulation in Pre-Settling Portion of Vault	Sediment accumulation in vault bottom exceeds the depth of the sediment zone plus 6-inches.	No sediment deposits in first chamber of vault.
	Trash/Debris Accumulation	Trash and debris accumulated in vault, or pipe inlet/outlet, floatables and non-floatables.	Trash and debris removed from vault and inlet/outlet piping.
	Sediment in Drain Pipes/Cleanouts	When drain pipes, cleanouts become full with sediment and/or debris.	Sediment and debris removed.
	Short Circuiting	When seepage/flow occurs along the vault walls and corners. Sand eroding near inflow area.	Sand filter media section re-laid and compacted along perimeter of vault to form a semi-seal. Erosion protection added to dissipate force of incoming flow and curtail erosion.
	Damaged Pipes	Inlet or outlet piping damaged or broken and in need of repair.	Pipe repaired and/or replaced.
	Access Cover Damaged/Not Working	Cover cannot be opened, corrosion/deformation of cover. Maintenance person cannot remove cover using normal lifting pressure.	Cover repaired to proper working specifications or replaced.
	Ventilation	Ventilation area blocked or plugged	Blocking material removed or cleared from ventilation area. A specified % of the vault surface area must provide ventilation to the vault interior (see design specifications).
	Vault Structure Damaged; Includes Cracks in Walls, Bottom, Damage to Frame and/or Top Slab.	Cracks wider than 1/2-inch or evidence of soil particles entering the structure through the cracks, or maintenance/inspection personnel determine that the vault is not structurally sound.	Vault replaced or repairs made so that vault meets design specifications and is structurally sound.
		Cracks wider than 1/2-inch at the joint of any inlet/outlet pipe or evidence of soil particles entering through the cracks.	Vault repaired so that no cracks exist wider than 1/4-inch at the joint of the inlet/outlet pipe.
	Baffles/Internal walls	Baffles or walls corroding, cracking, warping and/or showing signs of failure as determined by maintenance/inspection person.	Baffles repaired or replaced to specifications.
	Access Ladder Damaged	Ladder is corroded or deteriorated, not functioning properly, not securely attached to structure wall, missing rungs, cracks, and misaligned.	Ladder replaced or repaired to specifications, and is safe to use as determined by inspection personnel.

No. 15 – Manufactured Media Filters)

Maintenance Component	Defect	Condition When Maintenance is Needed	Results Expected When Maintenance is Performed
Below Ground Vault	Sediment Accumulation on Media.	Sediment depth exceeds 0.25-inches.	No sediment deposits which would impede permeability of the compost media.
	Sediment Accumulation in Vault	Sediment depth exceeds 6-inches in first chamber.	No sediment deposits in vault bottom of first chamber.
	Trash/Debris Accumulation	Trash and debris accumulated on compost filter bed.	Trash and debris removed from the compost filter bed.
	Sediment in Drain Pipes/Clean-Outs	When drain pipes, clean-outs, become full with sediment and/or debris.	Sediment and debris removed.
	Damaged Pipes	Any part of the pipes that are crushed or damaged due to corrosion and/or settlement.	Pipe repaired and/or replaced.
	Access Cover Damaged/Not Working	Cover cannot be opened; one person cannot open the cover using normal lifting pressure, corrosion/deformation of cover.	Cover repaired to proper working specifications or replaced.
	Vault Structure Includes Cracks in Wall, Bottom, Damage to Frame and/or Top Slab	Cracks wider than 1/2-inch or evidence of soil particles entering the structure through the cracks, or maintenance/inspection personnel determine that the vault is not structurally sound.	Vault replaced or repairs made so that vault meets design specifications and is structurally sound.
		Cracks wider than 1/2-inch at the joint of any inlet/outlet pipe or evidence of soil particles entering through the cracks.	Vault repaired so that no cracks exist wider than 1/4-inch at the joint of the inlet/outlet pipe.
	Baffles	Baffles corroding, cracking warping, and/or showing signs of failure as determined by maintenance/inspection person.	Baffles repaired or replaced to specifications.
	Access Ladder Damaged	Ladder is corroded or deteriorated, not functioning properly, not securely attached to structure wall, missing rungs, cracks, and misaligned.	Ladder replaced or repaired and meets specifications, and is safe to use as determined by inspection personnel.
Below Ground Cartridge Type	Media	Drawdown of water through the media takes longer than 1 hour, and/or overflow occurs frequently.	Media cartridges replaced.
	Short Circuiting	Flows do not properly enter filter cartridges.	Filter cartridges replaced.

No. 16 – Baffle Oil/Water Separators (API Type)

Maintenance Component	Defect	Condition When Maintenance is Needed	Results Expected When Maintenance is Performed
General	Monitoring	Inspection of discharge water for obvious signs of poor water quality.	Effluent discharge from vault should be clear with out thick visible sheen.
	Sediment Accumulation	Sediment depth in bottom of vault exceeds 6-inches in depth.	No sediment deposits on vault bottom that would impede flow through the vault and reduce separation efficiency.
	Trash and Debris Accumulation	Trash and debris accumulation in vault, or pipe inlet/outlet, floatables and non-floatables.	Trash and debris removed from vault, and inlet/outlet piping.
	Oil Accumulation	Oil accumulations that exceed 1-inch, at the surface of the water.	Extract oil from vault by vactoring. Disposal in accordance with state and local rules and regulations.
	Damaged Pipes	Inlet or outlet piping damaged or broken and in need of repair.	Pipe repaired or replaced.
	Access Cover Damaged/Not Working	Cover cannot be opened, corrosion/deformation of cover.	Cover repaired to proper working specifications or replaced.
	Vault Structure Damage - Includes Cracks in Walls Bottom, Damage to Frame and/or Top Slab	See “Catch Basins” (No. 5)	Vault replaced or repairs made so that vault meets design specifications and is structurally sound.
		Cracks wider than 1/2-inch at the joint of any inlet/outlet pipe or evidence of soil particles entering through the cracks.	Vault repaired so that no cracks exist wider than 1/4-inch at the joint of the inlet/outlet pipe.
	Baffles	Baffles corroding, cracking, warping and/or showing signs of failure as determined by maintenance/inspection person.	Baffles repaired or replaced to specifications.
	Access Ladder Damaged	Ladder is corroded or deteriorated, not functioning properly, not securely attached to structure wall, missing rungs, cracks, and misaligned.	Ladder replaced or repaired and meets specifications, and is safe to use as determined by inspection personnel.

No. 17 – Coalescing Plate Oil/Water Separators

Maintenance Component	Defect	Condition When Maintenance is Needed	Results Expected When Maintenance is Performed
General	Monitoring	Inspection of discharge water for obvious signs of poor water quality.	Effluent discharge from vault should be clear with no thick visible sheen.
	Sediment Accumulation	Sediment depth in bottom of vault exceeds 6-inches in depth and/or visible signs of sediment on plates.	No sediment deposits on vault bottom and plate media, which would impede flow through the vault and reduce separation efficiency.
	Trash and Debris Accumulation	Trash and debris accumulated in vault, or pipe inlet/outlet, floatables and non-floatables.	Trash and debris removed from vault, and inlet/outlet piping.
	Oil Accumulation	Oil accumulation that exceeds 1-inch at the water surface.	Oil is extracted from vault using vactoring methods. Coalescing plates are cleaned by thoroughly rinsing and flushing. Should be no visible oil depth on water.
	Damaged Coalescing Plates	Plate media broken, deformed, cracked and/or showing signs of failure.	A portion of the media pack or the entire plate pack is replaced depending on severity of failure.
	Damaged Pipes	Inlet or outlet piping damaged or broken and in need of repair.	Pipe repaired and or replaced.
	Baffles	Baffles corroding, cracking, warping and/or showing signs of failure as determined by maintenance/inspection person.	Baffles repaired or replaced to specifications.
	Vault Structure Damage - Includes Cracks in Walls, Bottom, Damage to Frame and/or Top Slab	Cracks wider than 1/2-inch or evidence of soil particles entering the structure through the cracks, or maintenance/inspection personnel determine that the vault is not structurally sound.	Vault replaced or repairs made so that vault meets design specifications and is structurally sound.
		Cracks wider than 1/2-inch at the joint of any inlet/outlet pipe or evidence of soil particles entering through the cracks.	Vault repaired so that no cracks exist wider than 1/4-inch at the joint of the inlet/outlet pipe.
	Access Ladder Damaged	Ladder is corroded or deteriorated, not functioning properly, not securely attached to structure wall, missing rungs, cracks, and misaligned.	Ladder replaced or repaired and meets specifications, and is safe to use as determined by inspection personnel.

No. 18 – Catchbasin Inserts

Maintenance Component	Defect	Conditions When Maintenance is Needed	Results Expected When Maintenance is Performed
General	Sediment Accumulation	When sediment forms a cap over the insert media of the insert and/or unit.	No sediment cap on the insert media and its unit.
	Trash and Debris Accumulation	Trash and debris accumulates on insert unit creating a blockage/restriction.	Trash and debris removed from insert unit. Runoff freely flows into catch basin.
	Media Insert Not Removing Oil	Effluent water from media insert has a visible sheen.	Effluent water from media insert is free of oils and has no visible sheen.
	Media Insert Water Saturated	Catch basin insert is saturated with water and no longer has the capacity to absorb.	Remove and replace media insert
	Media Insert-Oil Saturated	Media oil saturated due to petroleum spill that drains into catch basin.	Remove and replace media insert.
	Media Insert Use Beyond Normal Product Life	Media has been used beyond the typical average life of media insert product.	Remove and replace media at regular intervals, depending on insert product.

No. 19 – MEDIA FILTER DRAIN (MFD)

Maintenance Component	Defect	Conditions When Maintenance is Needed	Results Expected When Maintenance is Performed
General	Sediment accumulation on grass filter strip	Sediment depth exceeds 2 inches or creates uneven grading that interferes with sheet flow.	Remove sediment deposits on grass treatment area of the embankment. When finished, embankment should be level from side to side and drain freely toward the toe of the embankment slope. There should be no areas of standing water once inflow has ceased.
	No-vegetation zone/flow spreader	Flow spreader is uneven or clogged so that flows are not uniformly distributed over entire embankment width.	Level the spreader and clean to spread flows evenly over entire embankment width.
	Poor vegetation coverage	Grass is sparse or bare, or eroded patches are observed in more than 10% of the grass strip surface area.	Determine why grass growth is poor and correct the offending condition. Reseed into loosened, fertile soil or compost; or, replant with plugs of grass from the upper slope.
	Vegetation	Grass becomes excessively tall (greater than 10 inches); nuisance weeds and other vegetation start to take over.	Mow vegetation or remove nuisance vegetation to not impede flow. Mow grass to a height of 6 inches.
	Media filter drain mix replacement	Water is seen on the surface of the media filter drain mix long after the storms have ceased. Typically, the 6-month, 24-hour precipitation event should drain within 48 hours. More common storms should drain within 24 hours. Maintenance also needed on a 10-year cycle and during a preservation project.	Excavate and replace all of the media filter drain mix contained within the media filter drain.
	Excessive shading	Grass growth is poor because sunlight does not reach embankment.	If possible, trim back overhanging limbs and remove brushy vegetation on adjacent slopes.
	Trash and debris	Trash and debris have accumulated on embankment.	Remove trash and debris from embankment.
	Flooding of Media filter drain	When media filter drain is inundated by flood water	Evaluate media filter drain material for acceptable infiltration rate and replace if media filter drain does not meet long-term infiltration rate standards.

No. 20 – COMPOST AMENDED VEGETATED FILTER STRIP (CAVFS)

Maintenance Component	Defect	Conditions When Maintenance is Needed	Results Expected When Maintenance is Performed
General	Sediment accumulation on grass	Sediment depth exceeds 2 inches.	Remove sediment deposits. Relevel so slope is even and flows pass evenly through strip.
	Vegetation	Grass becomes excessively tall (greater than 10 inches); nuisance weeds and other vegetation start to take over.	Mow grass and control nuisance vegetation so that flow is not impeded. Grass should be mowed to a height of 6 inches.
	Trash and debris	Trash and debris have accumulated on the vegetated filter strip.	Remove trash and debris from filter.
	Erosion/scouring	Areas have eroded or scoured due to flow channelization or high flows.	For ruts or bare areas less than 12 inches wide, repair the damaged area by filling with a 50/50 mixture of crushed gravel and compost. The grass will creep in over the rock in time. If bare areas are large, generally greater than 12 inches wide, the vegetated filter strip should be regraded and reseeded. For smaller bare areas, overseed when bare spots are evident.
	Flow spreader	Flow spreader is uneven or clogged so that flows are not uniformly distributed over entire filter width.	Level the spreader and clean so that flows are spread evenly over entire filter width

~~No. 21 – Bioretention Facilities~~

~~Maintenance Component~~	~~Defect~~	~~Conditions When Maintenance is Needed~~	~~Results Expected When Maintenance is Performed~~
		~~Ecology has provided grant funding to develop detailed maintenance standards for Bioretention Facilities. Ecology anticipates a revision to this table by January 2013. Until that is available, refer to maintenance requirements listed in the *2012 Low Impact DevelopmentLID Technical Guidance Manual for Puget Sound* (2012).~~	

No. 21 - Maintenance Standards and Procedures for Bioretention Facilities.

Note that the inspection and routine maintenance frequencies listed below are recommended by Ecology. They do not supersede or replace the municipal stormwater permit requirements for inspection frequency required of municipal stormwater permittees for "stormwater treatment and flow control BMPs/facilities."
~~Note that the inspection and routine maintenance frequencies listed below are recommended by Ecology, but are not required. See your appropriate Permit for inspection and maintenance frequency requirements.~~

Maintenance Component	Recommended Frequency [a]		Condition when Maintenance is Needed (Standards)	Action Needed (Procedures)
	Inspection	Routine Maintenance		
Facility Footprint				
Earthen side slopes and berms	B, S	-	Erosion (gullies/ rills) greater than 2 inches deep around inlets, outlet, and alongside slopes	• Eliminate cause of erosion and stabilize damaged area (regrade, rock, vegetation, erosion control matting) • For deep channels or cuts (over 3 inches in ponding depth), temporary erosion control measures should be put in place until permanent repairs can be made. • Properly designed, constructed and established facilities with appropriate flow velocities should not have erosion problems except perhaps in extreme events. If erosion problems persist, the following should be reassessed: (1) flow volumes from contributing areas and bioretention facility sizing; (2) flow velocities and gradients within the facility; and (3) flow dissipation and erosion protection strategies at the facility inlet.
	A	-	Erosion of sides causes slope to become a hazard	Take actions to eliminate the hazard and stabilize slopes
	A, S	-	Settlement greater than 3 inches (relative to undisturbed sections of berm)	Restore to design height
	A, S	-	Downstream face of berm wet, seeps or leaks evident	Plug any holes and compact berm (may require consultation with engineer, particularly for larger berms)
	A	-	Any evidence of rodent holes or water piping in berm	• Eradicate rodents (see "Pest control") • Fill holes and compact (may require consultation with engineer, particularly for larger berms)
Concrete sidewalls	A	-	Cracks or failure of concrete sidewalls	• Repair/ seal cracks • Replace if repair is insufficient
Rockery sidewalls	A	-	Rockery side walls are insecure	Stabilize rockery sidewalls (may require consultation with engineer, particularly for walls 4 feet or greater in height)
Facility area	-	All maintenance visits (at least biannually)	Trash and debris present	Clean out trash and debris
Facility bottom area	A, S	-	Accumulated sediment to extent that infiltration rate is reduced (see "Ponded water") or surface storage capacity significantly impacted	• Remove excess sediment • Replace any vegetation damaged or destroyed by sediment accumulation and removal • Mulch newly planted vegetation • Identify and control the sediment source (if feasible) • If accumulated sediment is recurrent, consider adding presettlement or installing berms to create a forebay at the inlet
	-	During/after fall leaf drop	Accumulated leaves in facility	Remove leaves if there is a risk to clogging outlet structure or water flow is impeded
Low permeability check dams and weirs	A, S	-	Sediment, vegetation, or debris accumulated at or blocking (or having the potential to block) check dam, flow control weir or orifice	Clear the blockage

No. 21 – Bioretention Facilities

Maintenance Component	Defect	Conditions When Maintenance is Needed	Results Expected When Maintenance is Performed
	A, S	- Erosion and/or undercutting present	Repair and take preventative measures to prevent future erosion and/or undercutting
	A	- Grade board or top of weir damaged or not level	Restore to level position

[a] Frequency: A = Annually; B = Biannually (twice per year); M = Monthly; W = At least one visit should occur during the wet season (for debris/clog related maintenance, this inspection/maintenance visit should occur in the early fall, after deciduous trees have lost their leaves); S = Perform inspections after major storm events (24-hour storm event with a 10-year or greater recurrence interval).

IPM – Integrated Pest Management - - -

ISA – International Society of Arboriculture - -

No. 21 (continued) - Maintenance Standards and Procedures for Bioretention Facilities.

Maintenance Component	Recommended Frequency [a]		Condition when Maintenance is Needed (Standards)	Action Needed (Procedures)
	Inspection	Routine Maintenance		
Facility Footprint (cont'd)				
Ponded water	B, S	-	Excessive ponding water: Water overflows during storms smaller than the design event or ponded water remains in the basin 48 hours or longer after the end of a storm.	Determine cause and resolve in the following order: 1) Confirm leaf or debris buildup in the bottom of the facility is not impeding infiltration. If necessary, remove leaf litter/debris. 2) Ensure that underdrain (if present) is not clogged. If necessary, clear underdrain. 3) Check for other water inputs (e.g., groundwater, illicit connections). 4) Verify that the facility is sized appropriately for the contributing area. Confirm that the contributing area has not increas ed. If steps #1-4 do not solve the problem, the bioretention soil is likely clogged by sediment accumulation at the surface or has become overly compacted. Dig a small hole to observe soil profile and identify compaction depth or clogging front to help determine the soil depth to be removed or otherwise rehabilitated (e.g., tilled). Consultation with an engineer is recommended.
Bioretention soil media	As needed	-	Bioretention soil media protection is needed when performing maintenance requiring entrance into the facility footprint	• Minimize all loading in the facility footprint (foot traffic and other loads) to the degree feasible in order to prevent compaction of bioretention soils. • Never drive equipment or apply heavy loads in facility footprint. • Because the risk of compaction is higher during saturated soil conditions, any type of loading in the cell (including foot traffic) should be minimized during wet conditions. • Consider measures to distribute loading if heavy foot traffic is required or equipment must be placed in facility. As an example, boards may be placed across soil to distribute loads and minimize compaction. • If compaction occurs, soil must be loosened or otherwise rehabilitated to original design state.
Inlets/Outlets/Pipes				
Splash block inlet	A	-	Water is not being directed properly to the facility and away from the inlet structure	Reconfigure/ repair blocks to direct water to facility and away from structure
Curb cut inlet/outlet	M during the wet season and before severe storm is forecasted	Weekly during fall leaf drop	Accumulated leaves at curb cuts	Clear leaves (particularly important for key inlets and low points along long, linear facilities)
Pipe inlet/outlet	A	-	Pipe is damaged	Repair/ replace
	W	-	Pipe is clogged	Remove roots or debris
	A, S	-	Sediment, debris, trash, or mulch reducing capacity of inlet/outlet	• Clear the blockage • Identify the source of the blockage and take actions to prevent future blockages
	-	Weekly during fall leaf drop	Accumulated leaves at inlets/outlets	Clear leaves (particularly important for key inlets and low points along long, linear facilities)
	-	A	Maintain access for inspections	• Clear vegetation (transplant vegetation when possible) within 1 foot of inlets and outlets, maintain access pathways • Consultation with a landscape architect is recommended for removal, transplant, or substitution of plants
Erosion control at inlet	A	-	Concentrated flows are causing erosion	Maintain a cover of rock or cobbles or other erosion protection measure (e.g., matting) to protect the ground where concentrated water enters the facility (e.g., a pipe, curb cut or swale)

No. 21 (continued) - Maintenance Standards and Procedures for Bioretention Facilities.

Maintenance Component	Recommended Frequency [a]		Condition when Maintenance is Needed (Standards)	Action Needed (Procedures)
	Inspection	Routine Maintenance		
Inlets/Outlets/Pipes (cont'd)				
Trash rack	S	-	Trash or other debris present on trash rack	Remove/dispose
	A	-	Bar screen damaged or missing	Repair/replace
Overflow	A, S	-	Capacity reduced by sediment or debris	Remove sediment or debris/dispose
Underdrain pipe	Clean pipe as needed	Clean orifice at least biannually (may need more frequent cleaning during wet season)	• Plant roots, sediment or debris reducing capacity of underdrain • Prolonged surface ponding (see "Ponded water")	• Jet clean or rotary cut debris/roots from underdrain(s) • If underdrains are equipped with a flow restrictor (e.g., orifice) to attenuate flows, the orifice must be cleaned regularly.
Vegetation				
Facility bottom area and upland slope vegetation	Fall and Spring	-	Vegetation survival rate falls below 75% within first two years of establishment (unless project O&M manual or record drawing stipulates more or less than 75% survival rate).	• Determine cause of poor vegetation growth and correct condition • Replant as necessary to obtain 75% survival rate or greater. Refer to original planting plan, or approved jurisdictional species list for appropriate plant replacements (See Appendix 3 - Bioretention Plant List, in the LID Technical Guidance Manual for Puget Sound). • Confirm that plant selection is appropriate for site growing conditions • Consultation with a landscape architect is recommended for removal, transplant, or substitution of plants
Vegetation (general)	As needed	-	Presence of diseased plants and plant material	• Remove any diseased plants or plant parts and dispose of in an approved location (e.g., commercial landfill) to avoid risk of spreading the disease to other plants • Disinfect gardening tools after pruning to prevent the spread of disease • See Pacific Northwest Plant Disease Management Handbook for information on disease recognition and for additional resources • Replant as necessary according to recommendations provided for "facility bottom area and upland slope vegetation".
Trees and shrubs	-	All pruning seasons (timing varies by species)	Pruning as needed	• Prune trees and shrubs in a manner appropriate for each species. Pruning should be performed by landscape professionals familiar with proper pruning techniques • All pruning of mature trees should be performed by or under the direct guidance of an ISA certified arborist
	A	-	Large trees and shrubs interfere with operation of the facility or access for maintenance	• Prune trees and shrubs using most current ANSI A300 standards and ISA BMPs. • Remove trees and shrubs, if necessary.
	Fall and Spring	-	Standing dead vegetation is present	• Remove standing dead vegetation • Replace dead vegetation within 30 days of reported dead and dying plants (as practical depending on weather/planting season) • If vegetation replacement is not feasible within 30 days, and absence of vegetation may result in erosion problems, temporary erosion control measures should be put in place immediately. • Determine cause of dead vegetation and address issue, if possible • If specific plants have a high mortality rate, assess the cause and replace with appropriate species. Consultation with a landscape architect is recommended.
	Fall and Spring	-	Planting beneath mature trees	• When working around and below mature trees, follow the most current ANSI A300 standards and ISA BMPs to the extent practicable (e.g., take care to minimize any damage to tree roots and avoid compaction of soil). • Planting of small shrubs or groundcovers beneath mature trees may be desirable in some cases; such plantings should use mainly plants that come as bulbs, bare root or in 4-inch pots; plants should be in no larger than 1-gallon containers.

No. 21 (continued) - Maintenance Standards and Procedures for Bioretention Facilities.

Maintenance Component	Recommended Frequency [a]		Condition when Maintenance is Needed (Standards)	Action Needed (Procedures)
	Inspection	Routine Maintenance		
Vegetation (cont'd)				
Trees and shrubs (cont'd)	Fall and Spring	-	Planting beneath mature trees	• When working around and below mature trees, follow the most current ANSI A300 standards and ISA BMPs to the extent practicable (e.g., take care to minimize any damage to tree roots and avoid compaction of soil). • Planting of small shrubs or groundcovers beneath mature trees may be desirable in some cases; such plantings should use mainly plants that come as bulbs, bare root or in 4-inch pots; plants should be in no larger than 1-gallon containers.
	Fall and Spring	-	Presence of or need for stakes and guys (tree growth, maturation, and support needs)	• Verify location of facility liners and underdrain (if any) prior to stake installation in order to prevent liner puncture or pipe damage • Monitor tree support systems: Repair and adjust as needed to provide support and prevent damage to tree. • Remove tree supports (stakes, guys, etc.) after one growing season or maximum of 1 year. • Backfill stake holes after removal.
Trees and shrubs adjacent to vehicle travel areas (or areas where visibility needs to be maintained)	A	-	Vegetation causes some visibility (line of sight) or driver safety issues	• Maintain appropriate height for sight clearance • When continued, regular pruning (more than one time/ growing season) is required to maintain visual sight lines for safety or clearance along a walk or drive, consider relocating the plant to a more appropriate location. • Remove or transplant if continual safety hazard • Consultation with a landscape architect is recommended for removal, transplant, or substitution of plants
Flowering plants	-	A	Dead or spent flowers present	Remove spent flowers (deadhead)
Perennials	-	Fall	Spent plants	Cut back dying or dead and fallen foliage and stems
Emergent vegetation	-	Spring	Vegetation compromises conveyance	• Hand rake sedges and rushes with a small rake or fingers to remove dead foliage before new growth emerges in spring or earlier only if the foliage is blocking water flow (sedges and rushes do not respond well to pruning)
Ornamental grasses (perennial)	-	Winter and Spring	Dead material from previous year's growing cycle or dead collapsed foliage	• Leave dry foliage for winter interest • Hand rake with a small rake or fingers to remove dead foliage back to within several inches from the soil before new growth emerges in spring or earlier if the foliage collapses and is blocking water flow
Ornamental grasses (evergreen)	-	Fall and Spring	Dead growth present in spring	• Hand rake with a small rake or fingers to remove dead growth before new growth emerges in spring • Clean, rake, and comb grasses when they become too tall • Cut back to ground or thin every 2-3 years as needed
Noxious weeds	-	M (March – October, preceding seed dispersal)	Listed noxious vegetation is present (refer to current county noxious weed list)	• By law, class A & B noxious weeds must be removed, bagged and disposed as garbage immediately • Reasonable attempts must be made to remove and dispose of class C noxious weeds • It is strongly encouraged that herbicides and pesticides not be used in order to protect water quality; use of herbicides and pesticides may be prohibited in some jurisdictions • Apply mulch after weed removal (see "Mulch")

[a] Frequency: A = Annually; B = Biannually (twice per year); M = Monthly; W = At least one visit should occur during the wet season (for debris/clog related maintenance, this inspection/maintenance visit should occur in the early fall, after deciduous trees have lost their leaves); S = Perform inspections after major storm events (24-hour storm event with a 10-year or greater recurrence interval).

IPM – Integrated Pest Management

ISA – International Society of Arboriculture

No. 21 (continued) - Maintenance Standards and Procedures for Bioretention Facilities.

Maintenance Component	Recommended Frequency [a]		Condition when Maintenance is Needed (Standards)	Action Needed (Procedures)
	Inspection	Routine Maintenance		
Vegetation (cont'd)				
Weeds	-	M (March – October, preceding seed dispersal)	Weeds are present	• Remove weeds with their roots manually with pincer-type weeding tools, flame weeders, or hot water weeders as appropriate • Follow IPM protocols for weed management (see "Additional Maintenance Resources" section for more information on IPM protocols)
Excessive vegetation	-	Once in early to mid-May and once in early- to mid-September	Low-lying vegetation growing beyond facility edge onto sidewalks, paths, or street edge poses pedestrian safety hazard or may clog adjacent permeable pavement surfaces due to associated leaf litter, mulch, and soil	• Edge or trim groundcovers and shrubs at facility edge • Avoid mechanical blade-type edger and do not use edger or trimmer within 2 feet of tree trunks • While some clippings can be left in the facility to replenish organic material in the soil, excessive leaf litter can cause surface soil clogging
	As needed	-	Excessive vegetation density inhibits stormwater flow beyond design ponding or becomes a hazard for pedestrian and vehicular circulation and safety	• Determine whether pruning or other routine maintenance is adequate to maintain proper plant density and aesthetics • Determine if planting type should be replaced to avoid ongoing maintenance issues (an aggressive grower under perfect growing conditions should be transplanted to a location where it will not impact flow) • Remove plants that are weak, broken or not true to form; replace in-kind • Thin grass or plants impacting facility function without leaving visual holes or bare soil areas • Consultation with a landscape architect is recommended for removal, transplant, or substitution of plants
	As needed	-	Vegetation blocking curb cuts, causing excessive sediment buildup and flow bypass	• Remove vegetation and sediment buildup
Mulch				
Mulch	-	Following weeding	Bare spots (without mulch cover) are present or mulch depth less than 2 inches	• Supplement mulch with hand tools to a depth of 2 to 3 inches • Replenish mulch per O&M manual. Often coarse compost is used in the bottom of the facility and arborist wood chips are used on side slopes and rim (above typical water levels) • Keep all mulch away from woody stems
Watering				
Irrigation system (if any)	-	Based on manufacturer's instructions	Irrigation system present	• Follow manufacturer's instructions for O&M
	A	-	Sprinklers or drip irrigation not directed/located to properly water plants	• Redirect sprinklers or move drip irrigation to desired areas
Summer watering (first year)	-	Once every 1-2 weeks or as needed during prolonged dry periods	Trees, shrubs and groundcovers in first year of establishment period	• 10 to 15 gallons per tree • 3 to 5 gallons per shrub • 2 gallons water per square foot for groundcover areas • Water deeply, but infrequently, so that the top 6 to 12 inches of the root zone is moist • Use soaker hoses or spot water with a shower type wand when irrigation system is not present o Pulse water to enhance soil absorption, when feasible o Pre-moisten soil to break surface tension of dry or hydrophobic soils/mulch, followed by several more passes. With this method , each pass increases soil absorption and allows more water to infiltrate prior to runoff • Add a tree bag or slow-release watering device (e.g., bucket with a perforated bottom) for watering newly installed trees when irrigation system is not present

[a] Frequency: A = Annually; B = Biannually (twice per year); M = Monthly; W = At least one visit should occur during the wet season (for debris/clog related maintenance, this inspection/maintenance visit should occur in the early fall, after deciduous trees have lost their leaves); S = Perform inspections after major storm events (24-hour storm event with a 10-year or greater recurrence interval).

IPM – Integrated Pest Management

ISA – International Society of Arboriculture

No. 21 (continued) - Maintenance Standards and Procedures for Bioretention Facilities.

Maintenance Component	Recommended Frequency [a]		Condition when Maintenance is Needed (Standards)	Action Needed (Procedures)
	Inspection	Routine Maintenance		
Watering (cont'd)				
Summer watering (second and third years)	-	Once every 2-4 weeks or as needed during prolonged dry periods	Trees, shrubs and groundcovers in second or third year of establishment period	• 10 to 15 gallons per tree • 3 to 5 gallons per shrub • 2 gallons water per square foot for groundcover areas • Water deeply, but infrequently, so that the top 6 to 12 inches of the root zone is moist • Use soaker hoses or spot water with a shower type wand when irrigation system is not present o Pulse water to enhance soil absorption, when feasible o Pre-moisten soil to break surface tension of dry or hydrophobic soils/mulch, followed by several more passes. With this method , each pass increases soil absorption and allows more water to infiltrate prior to runoff
Summer watering (after establishment)	-	As needed	Established vegetation (after 3 years)	• Plants are typically selected to be drought tolerant and not require regular watering after establishment; however, trees may take up to 5 years of watering to become fully established • Identify trigger mechanisms for drought-stress (e.g., leaf wilt, leaf senescence, etc.) of different species and water immediately after initial signs of stress appear • Water during drought conditions or more often if necessary to maintain plant cover
Pest Control				
Mosquitoes	B, S	-	Standing water remains for more than 3 days after the end of a storm	• Identify the cause of the standing water and take appropriate actions to address the problem (see "Ponded water") • To facilitate maintenance, manually remove standing water and direct to the storm drainage system (if runoff is from non pollution-generating surfaces) or sanitary sewer system (if runoff is from pollution-generating surfaces) after getting approval from sanitary sewer authority. • Do not use pesticides or *Bacillus thuringiensis israelensis* (Bti)
Nuisance animals	As needed	-	Nuisance animals causing erosion, damaging plants, or depositing large volumes of feces	• Reduce site conditions that attract nuisance species where possible (e.g., plant shrubs and tall grasses to reduce open areas for geese, etc.) • Place predator decoys • Follow IPM protocols for specific nuisance animal issues (see "Additional Maintenance Resources" section for more information on IPM protocols) • Remove pet waste regularly • For public and right-of-way sites consider adding garbage cans with dog bags for picking up pet waste.
Insect pests	Every site visit associated with vegetation management	-	Signs of pests, such as wilting leaves, chewed leaves and bark, spotting or other indicators	• Reduce hiding places for pests by removing diseased and dead plants • For infestations, follow IPM protocols (see "Additional Maintenance Resources" section for more information on IPM protocols)

[a] Frequency: A = Annually; B = Biannually (twice per year); M = Monthly; W = At least one visit should occur during the wet season (for debris/clog related maintenance, this inspection/maintenance visit should occur in the early fall, after deciduous trees have lost their leaves); S = Perform inspections after major storm events (24-hour storm event with a 10-year or greater recurrence interval).

IPM – Integrated Pest Management

ISA – International Society of Arboriculture

No. 22 - Maintenance Standards and Procedures for Permeable Pavement.

Note that the inspection and routine maintenance frequencies listed below are recommended by Ecology. They do not supersede or replace the municipal stormwater permit requirements for inspection frequency required of municipal stormwater permittees for "stormwater treatment and flow control BMPs/facilities."
~~Note that the inspection and routine maintenance frequencies listed below are recommended by Ecology, but are not required. See your appropriate Permit for inspection and maintenance frequency requirements.~~

Component	Recommended Frequency [a]		Condition when Maintenance is Needed (Standards)	Action Needed (Procedures)
	Inspection	Routine Maintenance		
Surface/Wearing Course				
Permeable Pavements, all	A, S	-	Runoff from adjacent pervious areas deposits soil, mulch or sediment on paving	• Clean deposited soil or other materials from permeable pavement or other adjacent surfacing • Check if surface elevation of planted area is too high, or slopes towards pavement, and can be regraded (prior to regrading, protect permeable pavement by covering with temporary plastic and secure covering in place) • Mulch and/or plant all exposed soils that may erode to pavement surface
Porous asphalt or pervious concrete	-	A or B	None (routine maintenance)	Clean surface debris from pavement surface using one or a combination of the following methods: • Remove sediment, debris, trash, vegetation, and other debris deposited onto pavement (rakes and leaf blowers can be used for removing leaves) • Vacuum/sweep permeable paving installation using: o Walk-behind vacuum (sidewalks) o High efficiency regenerative air or vacuum sweeper (roadways, parking lots) o ShopVac or brush brooms (small areas) • Hand held pressure washer or power washer with rotating brushes Follow equipment manufacturer guidelines for when equipment is most effective for cleaning permeable pavement. Dry weather is more effective for some equipment.
	A[b]	-	Surface is clogged: Ponding on surface or water flows off the permeable pavement surface during a rain event (does not infiltrate)	• Review the overall performance of the facility (note that small clogged areas may not reduce overall performance of facility) • Test the surface infiltration rate using ASTM C1701 as a corrective maintenance indicator. Perform one test per installation, up to 2,500 square feet. Perform an additional test for each additional 2,500 square feet up to 15,000 square feet total. Above 15,000 square feet, add one test for every 10,000 square feet. • If the results indicate an infiltration rate of 10 inches per hour or less, then perform corrective maintenance to restore permeability. To clean clogged pavement surfaces, use one or combination of the following methods: • Combined pressure wash and vacuum system calibrated to not dislodge wearing course aggregate. • Hand held pressure washer or power washer with rotating brushes • Pure vacuum sweepers Note: If the annual/biannual routine maintenance standard to clean the pavement surface is conducted using equipment from the list above, corrective maintenance may not be needed.
	A	-	Sediment present at the surface of the pavement	• Assess the overall performance of the pavement system during a rain event. If water runs off the pavement and/or there is ponding then see above. • Determine source of sediment loading and evaluate whether or not the source can be reduced/eliminated. If the source cannot be addressed, consider increasing frequency of routine cleaning (e.g., twice per year instead of once per year).
	Summer	-	Moss growth inhibits infiltration or poses slip safety hazard	• Sidewalks: Use a stiff broom to remove moss in the summer when it is dry • Parking lots and roadways: Pressure wash, vacuum sweep, or use a combination of the two for cleaning moss from pavement surface. May require stiff broom or power brush in areas of heavy moss.
	A	-	Major cracks or trip hazards and concrete spalling and raveling	• Fill potholes or small cracks with patching mixes • Large cracks and settlement may require cutting and replacing the pavement section. Replace in-kind where feasible. Replacing porous asphalt with conventional asphalt is acceptable if it is a small percentage of the total facility area and does not impact the overall facility function. • Take appropriate precautions during pavement repair and replacement efforts to prevent clogging of adjacent porous materials

[a] Frequency: A= Annually; B= Biannually (twice per year); S = Perform inspections after major storm events (24-hour storm event with a 10-year or greater recurrence interval).

[b] Inspection should occur during storm event.

No. 22 (continued) - Maintenance Standards and Procedures for Permeable Pavement.

Component	Recommended Frequency [a]		Condition when Maintenance is Needed (Standards)	Action Needed (Procedures)
	Inspection	Routine Maintenance		
Surface/Wearing Course (cont'd)				
Interlocking concrete paver blocks and aggregate pavers	-	A or B	None (routine maintenance)	Clean pavement surface using one or a combination of the following methods: • Remove sediment, debris, trash, vegetation, and other debris deposited onto pavement (rakes and leaf blowers can be used for removing leaves) • Vacuum/sweep permeable paving installation using: o Walk-behind vacuum (sidewalks) o High efficiency regenerative air or vacuum sweeper (roadways, parking lots) o ShopVac or brush brooms (small areas) • Note: Vacuum settings may have to be adjusted to prevent excess uptake of aggregate from paver openings or joints. Vacuum surface openings in dry weather to remove dry, encrusted sediment.
	A [b]	-	Surface is clogged: Ponding on surface or water flows off the permeable pavement surface during a rain event (does not infiltrate)]	• Review the overall performance of the facility (note that small clogged areas may not reduce overall performance of facility) • Test the surface infiltration rate using ASTM C1701 as a corrective maintenance indicator. Perform one test per installation, up to 2,500 square feet. Perform an additional test for each additional 2,500 square feet up to 15,000 square feet total. Above 15,000 square feet, add one test for every 10,000 square feet. • If the results indicate an infiltration rate of 10 inches per hour or less, then perform corrective maintenance to restore permeability. • Clogging is usually an issue in the upper 2 to 3 centimeters of aggregate. Remove the upper layer of encrusted sediment, and fines, and/or vegetation from openings and joints between the pavers by mechanical means and/or suction equipment (e.g., pure vacuum sweeper). • Replace aggregate in paver cells, joints, or openings per manufacturer's recommendations
	A	-	Sediment present at the surface of the pavement	• Assess the overall performance of the pavement system during a rain event. If water runs off the pavement and/or there is ponding, then see above. • Determine source of sediment loading and evaluate whether or not the source can be reduced/eliminated. If the source cannot be addressed, consider increasing frequency of routine cleaning (e.g., twice per year instead of once per year).
	Summer	-	Moss growth inhibits infiltration or poses slip safety hazard	• Sidewalks: Use a stiff broom to remove moss in the summer when it is dry • Parking lots and roadways: Vacuum sweep or stiff broom/power brush for cleaning moss from pavement surface
	A	-	Paver block missing or damaged	Remove individual damaged paver blocks by hand and replace or repair per manufacturer's recommendations
	A	-	Loss of aggregate material between paver blocks	Refill per manufacturer's recommendations for interlocking paver sections
	A	-	Settlement of surface	May require resetting
Open-celled paving grid with gravel	-	A or B	None (routine maintenance)	• Remove sediment, debris, trash, vegetation, and other debris deposited onto pavement (rakes and leaf blowers can be used for removing leaves) • Follow equipment manufacturer guidelines for cleaning surface.
	A [b]	-	Aggregate is clogged: Ponding on surface or water flows off the permeable pavement surface during a rain event (does not infiltrate)]	• Use vacuum truck to remove and replace top course aggregate • Replace aggregate in paving grid per manufacturer's recommendations
	A	-	Paving grid missing or damaged	• Remove pins, pry up grid segments, and replace gravel • Replace grid segments where three or more adjacent rings are broken or damaged • Follow manufacturer guidelines for repairing surface.
	A	-	Settlement of surface	May require resetting
	A	-	Loss of aggregate material in paving grid	Replenish aggregate material by spreading gravel with a rake (gravel level should be maintained at the same level as the plastic rings or no more than 1/4 inch above the top of rings). See manufacturer's recommendations.
	-	A	Weeds present	• Manually remove weeds • Presence of weeds may indicate that too many fines are present (refer to Actions Needed under "Aggregate is clogged" to address this issue)

[a] Frequency: A= Annually; B= Biannually (twice per year); S = Perform inspections after major storm events (24-hour storm event with a 10-year or greater recurrence interval).

[b] Inspection should occur during storm event.

No. 22 (continued) - Maintenance Standards and Procedures for Permeable Pavement.

Component	Recommended Frequency [a]		Condition when Maintenance is Needed (Standards)	Action Needed (Procedures)
	Inspection	Routine Maintenance		
Surface/Wearing Course (cont'd)				
Open-celled paving grid with grass	-	A or B	None (routine maintenance)	• Remove sediment, debris, trash, vegetation, and other debris deposited onto pavement (rakes and leaf blowers can be used for removing leaves) • Follow equipment manufacturer guidelines for cleaning surface.
	A [b]	-	Aggregate is clogged: Ponding on surface or water flows off the permeable pavement surface during a rain event (does not infiltrate)]	• Rehabilitate per manufacturer's recommendations.
	A	-	Paving grid missing or damaged	• Remove pins, pry up grid segments, and replace grass • Replace grid segments where three or more adjacent rings are broken or damaged • Follow manufacturer guidelines for repairing surface.
	A	-	Settlement of surface	• May require resetting
	A	-	Poor grass coverage in paving grid	• Restore growing medium, reseed or plant, aerate, and/or amend vegetated area as needed • Traffic loading may be inhibiting grass growth; reconsider traffic loading if feasible
	-	As needed	None (routine maintenance)	• Use a mulch mower to mow grass
	-	A	None (routine maintenance)	• Sprinkle a thin layer of compost on top of grass surface (1/2" top dressing) and sweep it in • Do not use fertilizer
	-	A	Weeds present	• Manually remove weeds • Mow, torch, or inoculate and replace with preferred vegetation
Inlets/Outlets/Pipes				
Inlet/outlet pipe	A	-	Pipe is damaged	Repair/replace
	A	-	Pipe is clogged	Remove roots or debris
Underdrain pipe	Clean pipe as needed	Clean orifice at least biannually (may need more frequent cleaning during wet season)	Plant roots, sediment or debris reducing capacity of underdrain (may cause prolonged drawdown period)	• Jet clean or rotary cut debris/roots from underdrain(s) • If underdrains are equipped with a flow restrictor (e.g., orifice) to attenuate flows, the orifice must be cleaned regularly
Raised subsurface overflow pipe	Clean pipe as needed	Clean orifice at least biannually (may need more frequent cleaning during wet season)	Plant roots, sediment or debris reducing capacity of underdrain	• Jet clean or rotary cut debris/roots from under-drain(s) • If underdrains are equipped with a flow restrictor (e.g., orifice) to attenuate flows, the orifice must be cleaned regularly
Outlet structure	A, S	-	Sediment, vegetation, or debris reducing capacity of outlet structure	• Clear the blockage • Identify the source of the blockage and take actions to prevent future blockages

[a] Frequency: A= Annually; B= Biannually (twice per year); S = Perform inspections after major storm events (24-hour storm event with a 10-year or greater recurrence interval).

[b] Inspection should occur during storm event.

No. 22 (continued) - Maintenance Standards and Procedures for Permeable Pavement.

Component	Recommended Frequency [a]		Condition when Maintenance is Needed (Standards)	Action Needed (Procedures)
	Inspection	Routine Maintenance		
Inlets/Outlets/Pipes (cont'd)				
Overflow	B	-	Native soil is exposed or other signs of erosion damage are present at discharge point	Repair erosion and stabilize surface
Aggregate Storage Reservoir				
Observation port	A, S	-	Water remains in the storage aggregate longer than anticipated by design after the end of a storm	If immediate cause of extended ponding is not identified, schedule investigation of subsurface materials or other potential causes of system failure.
Vegetation				
Adjacent large shrubs or trees	-	As needed	Vegetation related fallout clogs or will potentially clog voids	• Sweep leaf litter and sediment to prevent surface clogging and ponding • Prevent large root systems from damaging subsurface structural components
	-	Once in May and Once in September	Vegetation growing beyond facility edge onto sidewalks, paths, and street edge	Edging and trimming of planted areas to control groundcovers and shrubs from overreaching the sidewalks, paths and street edge improves appearance and reduces clogging of permeable pavements by leaf litter, mulch and soil.
Leaves, needles, and organic debris	-	In fall (October to December) after leaf drop (1-3 times, depending on canopy cover)	Accumulation of organic debris and leaf litter	Use leaf blower or vacuum to blow or remove leaves, evergreen needles, and debris (i.e., flowers, blossoms) off of and away from permeable pavement

[a] Frequency: A= Annually; B= Biannually (twice per year); S = Perform inspections after major storm events (24-hour storm event with a 10-year or greater recurrence interval).

[b] Inspection should occur during storm event.

~~No. 22 – Permeable Pavement~~

~~Maintenance Component~~	~~Defect~~	~~Conditions When Maintenance is Needed~~	~~Results Expected When Maintenance is Performed~~
		~~Ecology has provided grant funding to develop detailed maintenance standards for Permeable Pavement. Ecology anticipates a revision to this table by January 2013. Until that is available, refer to maintenance requirements listed in the *LID Technical Guidance Manual for Puget Sound* (2012).*2012 Low Impact Development Technical Guidance Manual for Puget Sound*.~~	

This page purposely left blank

Chapter 5. - On-Site Stormwater Management

Note: Figures 5.1 through 5.5 are courtesy of King County

5.1 Purpose

This Chapter presents the methods for analysis and design of on-site stormwater management Best Management Practices (BMPs). Many of these BMPs, although being used elsewhere, are new locally. Efforts have been underway to further develop these "low impact development" concepts in Western Washington. Ecology has updated these BMPs and added references to the ~~*Low Impact Development Technical Guidance Manual for Puget Sound*~~*LID Technical Guidance Manual for Puget Sound* (2012), authored by the Washington State University Cooperative Extension and published by the Puget Sound Partnership. The document is available at the following website: http://www.psp.wa.gov/documents.php

Note that the *LID Technical Guidance Manual for Puget Sound* (2012) is for additional informational purposes only. You must follow the guidance within this manual if there are any discrepancies between this manual and the *LID Technical Guidance Manual for Puget Sound* (2012).

5.2 Application

The On-Site Stormwater Management BMPs presented in this Chapter help achieve compliance with Minimum Requirement #5, and can contribute toward compliance with Minimum Requirements #6 and #7.

Most of the BMPs serve to reduce runoff flow rates as well as to provide some pollutant reduction benefits. The Department of Ecology accepts Full Dispersion as meeting Minimum Requirements #6, and #7. Bioretention and Permeable Pavements can meet the same requirements for their tributary drainage areas depending upon site conditions and sizing.

5.3 Best Management Practices for On-Site Stormwater Management

This chapter contains several On-Site Stormwater Management BMPs.

Projects shall employ these BMPs to infiltrate, disperse, and retain stormwater runoff on site to the maximum extent practicable without causing flooding or erosion impacts. Sites that are required to provide water quality treatment must provide treatment before infiltration or use infiltration as treatment. Sites that can fully infiltrate (see Volume III, Chapter 3, Section 3.3) or fully disperse (see BMP T5.30) are not required to provide additional runoff treatment or flow control facilities. Full

dispersion applies to sites (or sub-areas of sites) with a maximum of 10% effective impervious area that is dispersed through 65% of the site maintained in natural vegetation. Full dispersion using substantially less area can also be utilized by roads through soils with high saturated hydraulic conductivity.

Hard surfaces that are not fully dispersed or infiltrated should be partially dispersed or infiltrated to the maximum extent practicable. For projects triggering minimum requirement #7, if the model predicts a 0.10 cfs or greater increase in the 100-year return frequency flow (or a 1.5 cfs increase for 15-minute time steps), or if certain thresholds of impervious surfaces or converted pervious surfaces are exceeded within a threshold discharge area (see Volume 1, Section 2.5.7), then the project must comply with the flow control standard. Also, projects that exceed the thresholds in Section 2.5.6 of Volume 1 must comply with treatment requirements.

5.3.1 On-site Stormwater Management BMPs

Purpose:

The primary purpose of On-site (LID) Stormwater Management BMPs is to reduce the disruption of the natural site hydrology. Local governments under the Municipal Stormwater Permits can require projects to use these BMPs to gain compliance with Minimum Requirement #5. Municipal permittees that adopt different BMPs shall document how those BMPS will protect water quality, reduce the discharge of pollutants to the maximum extent practicable, and satisfy the state AKART requirements

Competing Needs:

The On-site Stormwater Management BMPs can be superseded or reduced where they are in conflict with:

- Requirements of the following federal or state laws, rules, and standards: Historic Preservation Laws and Archaeology Laws as listed at http://www.dahp.wa.gov/learn-and-research/preservation-laws, Federal Superfund or Washington State Model Toxics Control Act, Federal Aviation Administration requirements for airports, Americans with Disabilities Act.
- Where an LID requirement has been found to be in conflict with special zoning district design criteria adopted and being implemented pursuant to a community planning process, the existing local codes may supersede or reduce the LID requirement. This does not relieve municipal stormwater permittees of the requirement to review local design codes, standards, and rules to remove barriers and require use of LID principles and BMP's.

- Public health and safety standards.
- Transportation regulations to maintain the option for future expansion or multi-modal use of public rights-of-way.
- A local Critical Area Ordinance that provides protection of tree species.

BMP T5.10A: Downspout Full Infiltration

Please refer to Section 3.1.1 in Volume III of this manual.

BMP T5.10B: Downspout Dispersion Systems

Please refer to Section 3.1.2 in Volume III of this manual.

BMP T5.10C: Perforated Stub-out Connections

Please refer to Section 3.1.3 in Volume III of this manual.

BMP T5.11: Concentrated Flow Dispersion

Purpose and Definition

Dispersion of concentrated flows from driveways or other pavement through a vegetated pervious area attenuates peak flows by slowing entry of the runoff into the conveyance system, allowing for some infiltration, and providing some water quality benefits. See Figure 5.3.1.

Applications and Limitations

- Use this BMP in any situation where concentrated flow can be dispersed through vegetation.
- Figure 5.3.1 shows two possible ways of spreading flows from steep driveways.

Design Guidelines

- Maintain a vegetated flowpath of at least 50 feet between the discharge point and any property line, structure, steep slope, stream, lake, wetland, lake, or other impervious surface.
- A maximum of 700 square feet of impervious area may drain to each concentrated flow dispersion BMP.
- Provide a pad of crushed rock (a minimum of 2 feet wide by 3 feet long by 6 inches deep) at each discharge point.
- No erosion or flooding of downstream properties may result.
- Runoff discharged towards landslide hazard areas must be evaluated by a geotechnical engineer or qualified geologist. Do not place the discharge point on or above slopes greater than 20%, or above erosion hazard areas, without evaluation by a geotechnical engineer or qualified geologist and approval by the Local Plan Approval Authority.

- For sites with septic systems, the discharge point must be ten feet downgradient of the drainfield primary and reserve areas (WAC 246-272A-0210). A Local Plan Approval Authority may waive this requirement if site topography clearly prohibits flows from intersecting the drainfield.

Runoff Modeling

Where BMP T5.11 is used to disperse runoff into an undisturbed native landscape area or an area that meets BMP T5.13, and the vegetated flow path is at least 50 feet, the impervious area may be modeled as landscaped area. Where the vegetated flowpath is 25 – 50 feet, using a dispersion trench (see BMP T5.10B) allows modeling the impervious area as 50% impervious/50% landscape. This is done in the WWHM 3 on the Mitigated Scenario screen by entering the dispersed impervious area into one of the entry options for dispersal of impervious area runoff. For procedures in WWHM 2012, see Appendix III-C.

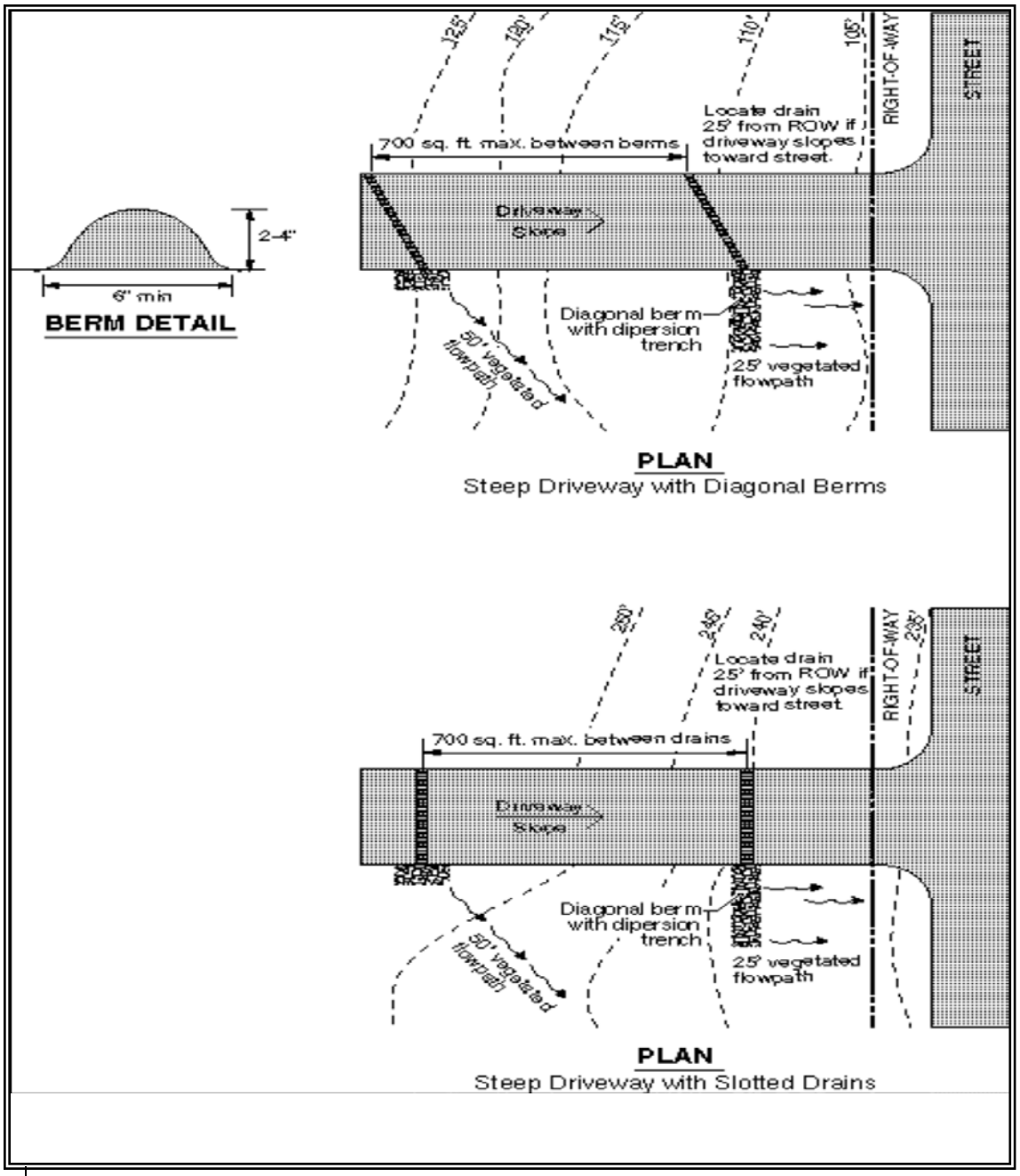
2-4"
6" min
BERM DETAIL
125'
120'
115'
110'
105'
RIGHT-OF-WAY
STREET
Locate drain 25' from ROW if driveway slopes toward street.
700 sq. ft. max. between berms
Driveway Slope
Diagonal berm with dispersion trench
50' vegetated flowpath
25' vegetated flowpath
PLAN
Steep Driveway with Diagonal Berms
250'
245'
240'
235'
RIGHT-OF-WAY
STREET
Locate drain 25' from ROW if driveway slopes toward street
700 sq. ft. max. between drains
Driveway Slope
Diagonal berm with dispersion trench
50' vegetated flowpath
25' vegetated flowpath
PLAN
Steep Driveway with Slotted Drains

Figure 5.3.1 – Typical Concentrated Flow Dispersion for Steep Driveways

BMP T5.12: Sheet Flow Dispersion

Purpose and Definition

Sheet flow dispersion is the simplest method of runoff control. This BMP can be used for any impervious or pervious surface that is graded to avoid concentrating flows). Because flows are already dispersed as they leave the surface, they need only traverse a narrow band of adjacent vegetation for effective attenuation and treatment.

Applications and Limitations

Use this BMP for flat or moderately sloping (< 15% slope) surfaces such as driveways, sports courts, patios, roofs without gutters, lawns, pastures; or any situation where concentration of flows can be avoided.

Design Guidelines

- See Figure 5.3.2 for details for driveways.
- Provide a 2-foot-wide transition zone to discourage channeling between the edge of the impervious surface (or building eaves) and the downslope vegetation. This transition zone may consist of an extension of subgrade material (crushed rock), modular pavement, drain rock, or other material acceptable to the Local Plan Approval Authority.
- Provide a 10-foot-wide vegetated buffer for up to 20 feet of width of paved or impervious surface. Provide an additional 10 feet of vegetated buffer width for each additional 20 feet of impervious surface width or fraction thereof. (For example, if a driveway is 30 feet wide and 60 feet long provide a 20-foot wide by 60-foot long vegetated buffer, with a 2-foot by 60-foot transition zone.)
- No erosion or flooding of downstream properties may result.
- Runoff discharge toward landslide hazard areas must be evaluated by a geotechnical engineer or a qualified geologist. Do not allow sheet flow on or above slopes greater than 20%, or above erosion hazard areas, without evaluation by a geotechnical engineer or qualified geologist and approval by the Local Plan Approval Authority.
- For sites with septic systems, the discharge area must be ten feet downgradient of the drainfield primary and reserve areas (WAC 246-272A-0210). A Local Plan Approval Authority may waive this requirement if site topography clearly prohibits flows from intersecting the drainfield.

Runoff Modeling

Where BMP T5.12 is used to disperse runoff into an undisturbed native landscape area or an area that meets BMP T5.13, and the vegetated flow path is 50 feet or more, the impervious area may be modeled as landscaped area. Where the vegetated flowpath is 25 to 50 feet, use of a dispersion trench (see BMP T5.10B) allows modeling the impervious area as 50% impervious/50% landscape. This is done in the WWHM3 on the Mitigation Scenario screen by entering the dispersed impervious area

into one of the entry options for dispersal of impervious area runoff. For procedures in WWHM 2012, see Appendix III-C in Volume III.

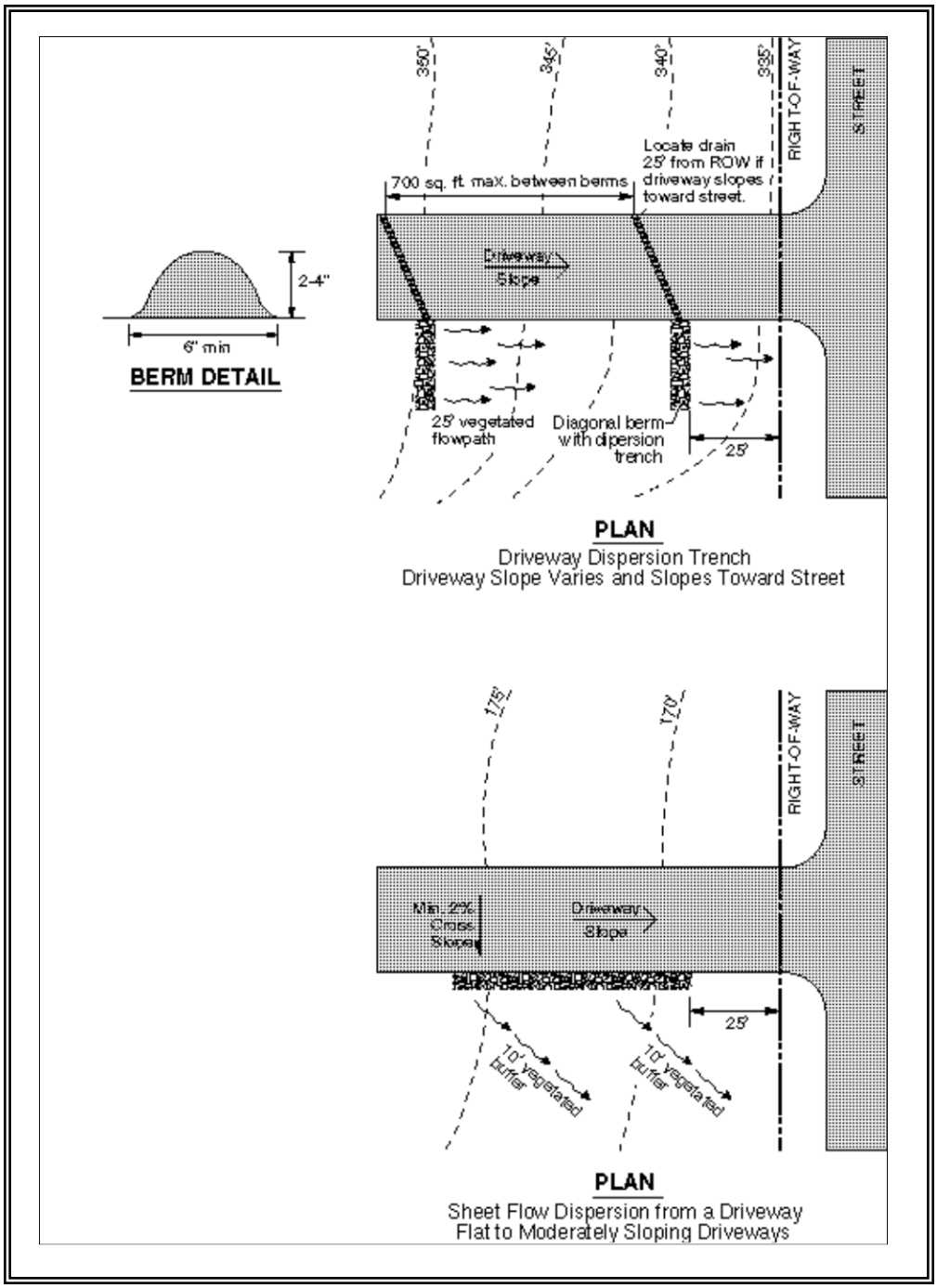

Figure 5.3.2 – Sheet Flow Dispersion for Driveways

BMP T5.13: Post-Construction Soil Quality and Depth

Purpose and Definition

Naturally occurring (undisturbed) soil and vegetation provide important stormwater functions including: water infiltration; nutrient, sediment, and pollutant adsorption; sediment and pollutant biofiltration; water interflow storage and transmission; and pollutant decomposition. These functions are largely lost when development strips away native soil and vegetation and replaces it with minimal topsoil and sod. Not only are these important stormwater functions lost, but such landscapes themselves become pollution generating pervious surfaces due to increased use of pesticides, fertilizers and other landscaping and household/industrial chemicals, the concentration of pet wastes, and pollutants that accompany roadside litter.

Establishing soil quality and depth regains greater stormwater functions in the post development landscape, provides increased treatment of pollutants and sediments that result from development and habitation, and minimizes the need for some landscaping chemicals, thus reducing pollution through prevention.

Applications and Limitations

Establishing a minimum soil quality and depth is not the same as preservation of naturally occurring soil and vegetation. However, establishing a minimum soil quality and depth will provide improved on-site management of stormwater flow and water quality.

Soil organic matter can be attained through numerous materials such as compost, composted woody material, biosolids, and forest product residuals. It is important that the materials used to meet the soil quality and depth BMP be appropriate and beneficial to the plant cover to be established. Likewise, it is important that imported topsoils improve soil conditions and do not have an excessive percent of clay fines.

This BMP can be considered infeasible on till soil slopes greater than 33 percent.

Design Guidelines

- Soil retention. Retain, in an undisturbed state, the duff layer and native topsoil to the maximum extent practicable. In any areas requiring grading remove and stockpile the duff layer and topsoil on site in a designated, controlled area, not adjacent to public resources and critical areas, to be reapplied to other portions of the site where feasible.
- Soil quality. All areas subject to clearing and grading that have not been covered by impervious surface, incorporated into a drainage facility or engineered as structural fill or slope shall, at project completion, demonstrate the following:
    1. A topsoil layer with a minimum organic matter content of 10% dry weight in planting beds, and 5% organic matter content in turf areas, and a pH from 6.0 to 8.0 or matching the pH of the undisturbed soil. The topsoil layer shall have a minimum depth of

eight inches except where tree roots limit the depth of incorporation of amendments needed to meet the criteria. Subsoils below the topsoil layer should be scarified at least 4 inches with some incorporation of the upper material to avoid stratified layers, where feasible.

2. Mulch planting beds with 2 inches of organic material
3. Use compost and other materials that meet these organic content requirements:
   a. The organic content for "pre-approved" amendment rates can be met only using compost ~~that meets the definition of "composted materials" in WAC 173-350-100. This code is available online at:~~ meeting the compost specification for Bioretention (BMP T7.30), with the exception that the compost may have up to 35% biosolids or manure. ~~http://apps.leg.wa.gov/wac/default.aspx?cite=173-350~~

      The compost must also have an organic matter content of 40% to 65%, and a carbon to nitrogen ratio below 25:1.

      The carbon to nitrogen ratio may be as high as 35:1 for plantings composed entirely of plants native to the Puget Sound Lowlands region.

   b. Calculated amendment rates may be met through use of composted material~~s~~ meeting (a.) above; or other organic materials amended to meet the carbon to nitrogen ratio requirements, and ~~meeting the contaminant standards of Grade A Compost.~~not exceeding the contaminant limits identified in Table 220-B, Testing Parameters, in WAC 173-350-220.

The resulting soil should be conducive to the type of vegetation to be established.

- Implementation Options: The soil quality design guidelines listed above can be met by using one of the methods listed below:
  1. Leave undisturbed native vegetation and soil, and protect from compaction during construction.
  2. Amend existing site topsoil or subsoil either at default "pre-approved" rates, or at custom calculated rates based on tests of the soil and amendment.
  3. Stockpile existing topsoil during grading, and replace it prior to planting. Stockpiled topsoil must also be amended if needed to meet the organic matter or depth requirements, either at a default "pre-approved" rate or at a custom calculated rate.
  4. Import topsoil mix of sufficient organic content and depth to meet the requirements.

More than one method may be used on different portions of the same site. Soil that already meets the depth and organic matter quality standards, and is not compacted, does not need to be amended.

Planning/Permitting/Inspection/Verification Guidelines & Procedures

- Local governments are encouraged to adopt guidelines and procedures similar to those recommended in *Guidelines and Resources For Implementing Soil Quality and Depth BMP T5.13 in WDOE Stormwater Management Manual for Western Washington*. This document is available at: http://www.soilsforsalmon.org/pdf/Soil_BMP_Manual.pdf

Maintenance

- Establish soil quality and depth toward the end of construction and once established, protect from compaction, such as from large machinery use, and from erosion.
- Plant vegetation and mulch the amended soil area after installation.
- Leave plant debris or its equivalent on the soil surface to replenish organic matter.
- Reduce and adjust, where possible, the use of irrigation, fertilizers, herbicides and pesticides, rather than continuing to implement formerly established practices.

Runoff Model Representation

Areas meeting the design guidelines may be entered into approved runoff models as "Pasture" rather than "Lawn."

Flow reduction credits can be taken in runoff modeling when BMP T5.13 is used as part of a dispersion design under the conditions described in:

BMP T5.10B Downspout Dispersion

BMP T5.11 Concentrated Flow Dispersion

BMP T5.12 Sheet Flow Dispersion

BMP T5.18 Reverse Slope Sidewalks

BMP T5.30 Full Dispersion (for public road projects)

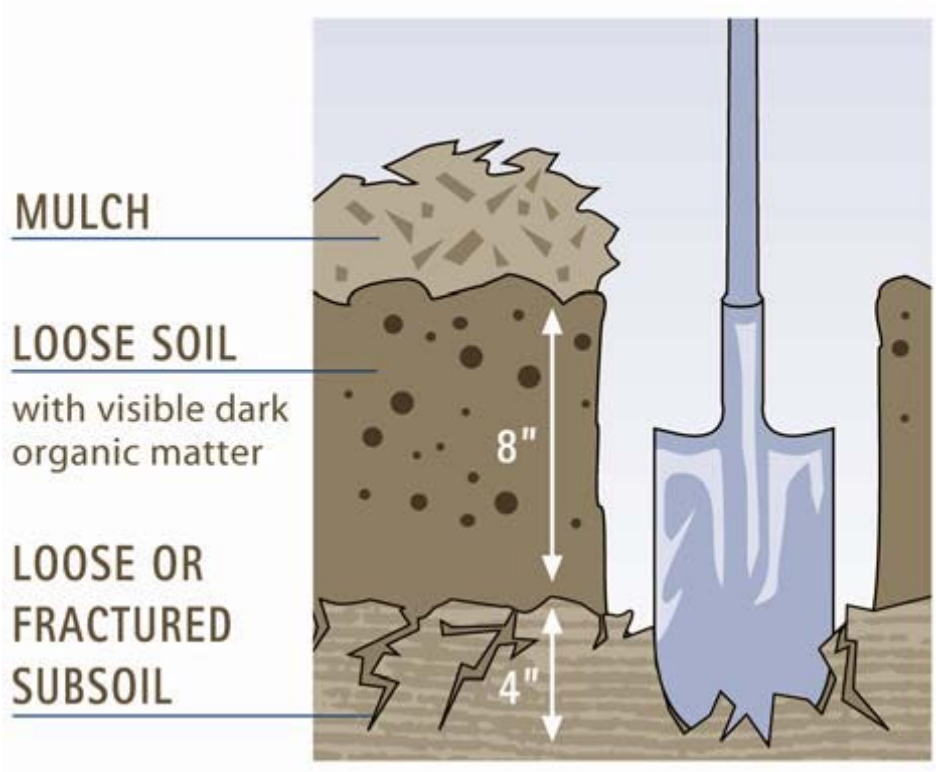

Figure 5.3.3 – Planting bed Cross-Section

(Reprinted from *Guidelines and Resources For Implementing Soil Quality and Depth BMP T5.13 in WDOE Stormwater Management Manual for Western Washington*, 2010, Washington Organic Recycling Council)

BMP T5.14A: Rain Gardens

Purpose and Definition

Land development projects may not be of sufficient size such that it is practical to construct engineered stormwater facilities for flow reduction and pollutant removal. However, the cumulative impact of smaller development projects on the natural hydrology and water quality of local waters can be significant. To reduce that cumulative impact, small projects (see Section 2.4 in Volume I) must implement on-site stormwater management BMP's (See Minimum Requirement #5 in Section 2.5 of Volume I). Rain gardens are an on-site stormwater management BMP that can provide effective removal of many stormwater pollutants, and provide reductions in stormwater runoff quantity and surface runoff flow rates.

Rain gardens are non-engineered, shallow, landscaped depressions with compost-amended soils and adapted plants. The depression ponds and temporarily stores stormwater runoff from adjacent areas. A portion of the influent stormwater passes through the amended soil profile and into the native soil beneath. Stormwater that exceeds the storage capacity is designed to overflow to an adjacent drainage system.

Applications and Limitations

Rain gardens are an on-site stormwater management BMP option for projects that have to comply with Minimum Requirements #1 - #5, but not Minimum Requirements #6 - #9. For projects electing to use List #1 of Minimum Requirement #5, rain gardens are to be used to the extent feasible for runoff from roofs and other hard surfaces unless a higher priority BMP is feasible.

Infeasibility criteria for rain gardens are the same as for bioretention. Please see Bioretention infeasibility criteria in BMP T7.30 of this Volume.

Although not required, Ecology recommends installation by a landscaping company with experience in rain garden construction.

Rain gardens constructed with imported compost materials should not be used within one-quarter mile of phosphorus-sensitive waterbodies. Preliminary monitoring indicates that new rain gardens can add phosphorus to stormwater. Therefore, they should also not be used with an underdrain when the underdrain water would be routed to a phosphorus-sensitive receiving water.

Design Guidelines

Refer to the *Rain Garden Handbook for Western Washington* ~~*Homeowners*~~ (~~Pierce County Extension of Washington State University,~~ 2013~~2007 or as revised~~) for rain garden specifications and construction guidance.

For amending the native soil within the rain garden, Ecology recommends use of compost that meets the compost specification for bioretrention (see BMP T7.30). Compost that includes biosolids or

manures shall not be used.

For design on projects subject to Minimum Requirement #5, and choosing to use List #1 of that requirement, rain gardens shall have a horizontally projected surface area below the overflow which is at least 5% of the total impervious surface area draining to it. If lawn/landscape area will also be draining to the rain garden, Ecology recommends that the rain garden's horizontally projected surface area below the overflow be increased by 2% of the lawn/landscape area.

Maintenance

Until such time as Ecology publishes guidance in regard to maintenance of rain gardens, please refer to the *Rain Garden Handbook for Western Washington* ~~Homeowners~~(2013). That document provides tips on mulching, watering, weeding, pruning, and soil management.

BMP T5.14B: Bioretention

Purpose and Definition

Bioretention areas are shallow landscaped depressions, with a designed soil mix and plants adapted to the local climate and soil moisture conditions, that receive stormwater from a contributing area.

Bioretention provides effective removal of many stormwater pollutants by passing stormwater through a soil profile that meets specified characteristics. Bioretention can also reduce stormwater runoff quantity and surface runoff flow rates significantly where the exfiltrate from the design soil is allowed to infiltrate into the surrounding native soils. Bioretention can be used as a primary or supplemental detention/retention system. Where the native soils have low infiltration rates, under-drain systems can be installed and the facility used to filter pollutants and detain flows. However, designs utilizing under-drains provide less flow control benefits.

Applications and Limitations

Bioretention facilities are an On-site BMP option for projects that only have to comply with Minimum Requirements #1 - #5. For projects electing to use Mandatory List #2 of Minimum Requirement #5, bioretention facilities are to be used to the extent feasible for runoff from roofs and other hard surfaces unless a higher priority BMP is feasible.

Use of bioretention can be restricted by site limitations. Please see Bioretention infeasibility criteria in BMP T7.30 of this Volume.

Design Guidelines

Refer to BMP T7.30 in Chapter 7 of this Volume for detailed design guidelines.

For design on projects subject to Minimum Requirement #5, and choosing to use List #1 or List #2 of that requirement, a bioretention facility shall have a horizontally projected surface area below the overflow which is at least 5% of the total impervious surface area draining to it. If lawn/landscape area will also be draining to the

bioretention facility, Ecology recommends that the bioretention facility's horizontally projected surface area below the overflow be increased by 2% of the lawn/landscape area.

Maintenance

Refer to BMP T7.30 and Section 4.6 of this Volume for maintenance guidelines.

BMP T5.15: Permeable Pavements

Purpose and Definition

Pavement for vehicular and pedestrian travel occupies roughly twice the space of buildings. Stormwater from vehicular pavement can contain significant levels of solids, heavy metals, and hydrocarbon pollutants. Both pedestrian and vehicular pavements also contribute to increased peak flow durations and associated physical habitat degradation of streams and wetlands. Optimum management of stormwater quality and quantity from paved surfaces is, therefore, critical for improving fresh and marine water conditions in Puget Sound.

The general categories of permeable paving systems include:

- ***Porous hot or warm-mix asphalt pavement*** (see Figure 5.3.4) is a flexible pavement similar to standard asphalt that uses a bituminous binder to adhere aggregate together. However, the fine material (sand and finer) is reduced or eliminated and, as a result, voids form between the aggregate in the pavement surface and allow water to infiltrate.
- ***Pervious Portland cement concrete*** (see Figure 5.3.4) is a rigid pavement similar to conventional concrete that uses a cementitious material to bind aggregate together. However, the fine aggregate (sand) component is reduced or eliminated in the gradation and, as a result, voids form between the aggregate in the pavement surface and allow water to infiltrate.

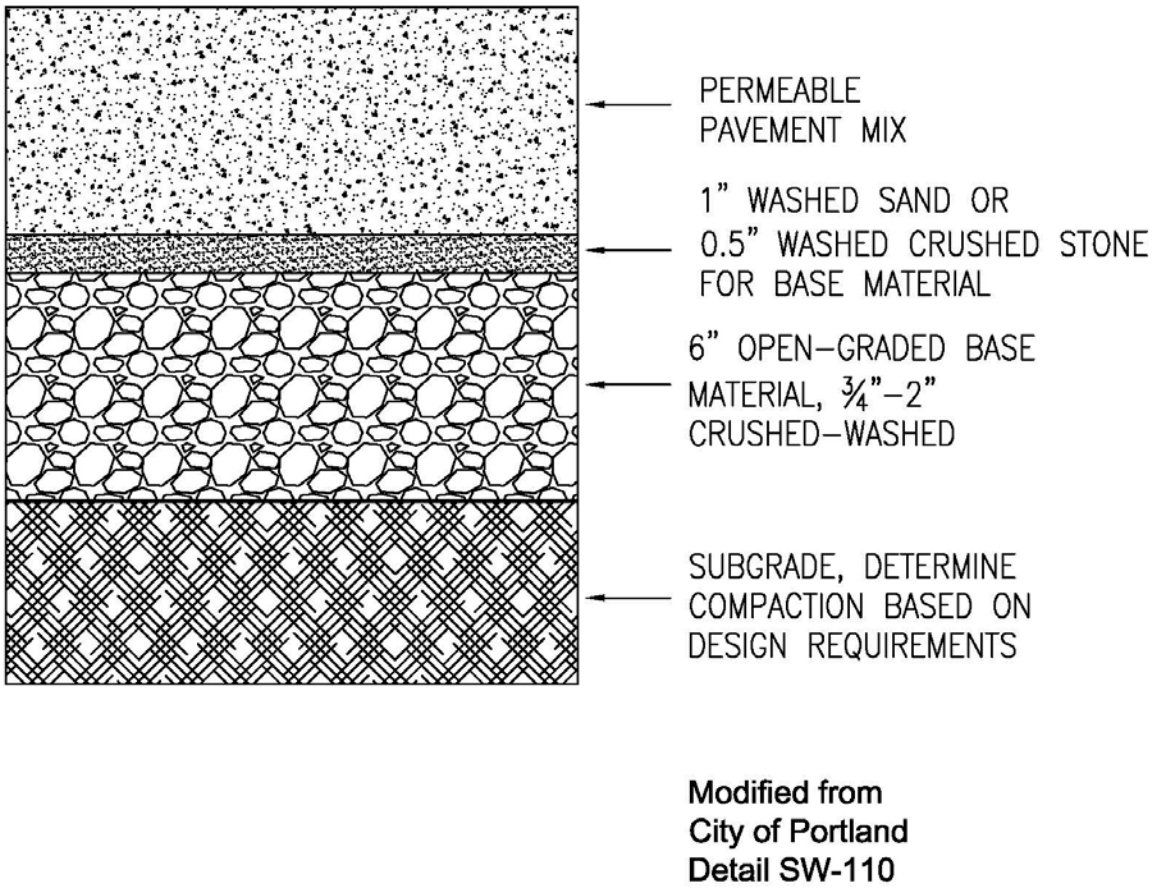

Figure 5.3.4 – Example of a Permeable Pavement (concrete or asphalt) Section

- ***Permeable interlocking concrete pavements (PICP) and aggregate pavers.*** (see Figure 5.3.5) PICPs are solid, precast, manufactured modular units. The solid pavers are (impervious) high-strength Portland cement concrete manufactured with specialized production equipment. Pavements constructed with these units create joints that are filled with permeable aggregates and installed on an open-graded aggregate bedding course. Aggregate pavers (sometime called pervious pavers) are a different class of pavers from PICP. These include modular precast paving units made with similar sized aggregates bound together with Portland cement concrete with high-strength epoxy or other adhesives. Like PICP, the joints or openings in the units are filled with open-graded aggregate and placed on an open-graded aggregate bedding course. Aggregate pavers are intended for pedestrian use only.

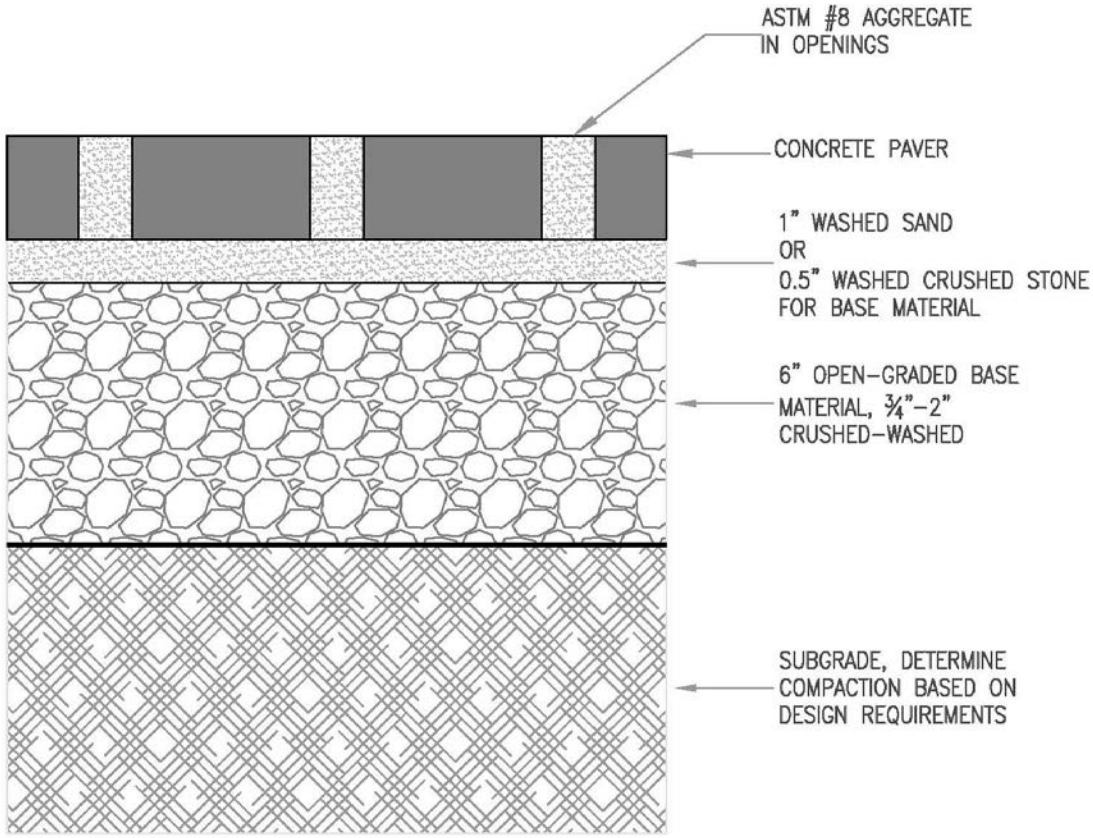

Modified from City of Portland Detail SW-110

Figure 5.3.5 – Example of a Permeable Paver Section

- ***Grid systems*** include those made of concrete or plastic. Concrete units are precast in a manufacturing facility, packaged and shipped to the site for installation. Plastic grids typically are delivered to the site in rolls or sections. The openings in both grid types are filled with topsoil and grass or permeable aggregate. Plastic grid sections connect together and are pinned into a dense-graded base, or are eventually held in place by the grass root structure. Both systems can be installed on an open-graded aggregate base as well as a dense-graded aggregate base.

Applications and Limitations

Permeable paving surfaces are an important integrated management practice within the LID approach and can be designed to accommodate pedestrian, bicycle and auto traffic while allowing infiltration, treatment and storage of stormwater.

Permeable pavements are appropriate in many applications where traditionally impermeable pavements have been used. Typical applications for permeable paving include parking lots, sidewalks, pedestrian and bike trails, driveways, residential access roads, and emergency and facility maintenance roads.

Limitations:

- No run-on from pervious surfaces is preferred. If runoff comes from minor or incidental pervious areas, those areas must be fully stabilized.
- Unless the pavement, base course, and subgrade have been designed to accept runoff from adjacent impervious surfaces, slope impervious runoff away from the permeable pavement to the maximum extent practicable. Sheet flow from up-gradient impervious areas is not recommended, but permissible if the permeable pavement area is ~~porous surface flow path~~ ≥ the impervious pavement area~~surface flow path~~.
- Soils must not be tracked onto the wear layer or the base course during construction.

Infeasibility Criteria:

These are conditions that make permeable pavement not required. If a project proponent wishes to use permeable pavement - though not required to because of these feasibility criteria - they may propose a functional design to the local government.

These criteria also apply to impervious pavements that would employ stormwater collection from the surface of impervious pavement with redistribution below the pavement.

Citation of any of the following infeasibility criteria must be based on an evaluation of site-specific conditions and a written recommendation from an appropriate licensed professional (e.g, engineer, geologist, hydrogeologist)

- Where professional geotechnical evaluation recommends infiltration not be used due to reasonable concerns about erosion, slope failure, or down gradient flooding.
- Within an area whose ground water drains into an erosion hazard, or landslide hazard area.
- Where infiltrating and ponded water below new permeable pavement area would compromise adjacent impervious pavements.
- Where infiltrating water below a new permeable pavement area would threaten existing below grade basements.
- Where infiltrating water would threaten shoreline structures such as bulkheads.

- Down slope of steep, erosion prone areas that are likely to deliver sediment.
- Where fill soils are used that can become unstable when saturated.
- Excessively steep slopes where water within the aggregate base layer or at the sub-grade surface cannot be controlled by detention structures and may cause erosion and structural failure, or where surface runoff velocities may preclude adequate infiltration at the pavement surface.
- Where permeable pavements can not provide sufficient strength to support heavy loads at industrial facilities such as ports.
- Where installation of permeable pavement would threaten the safety or reliability of pre-existing underground utilities, pre-existing underground storage tanks, or pre-existing road sub-grades.

The following criteria can be cited as reasons for a finding of infeasibility without further justification (though some require professional services to make the observation):

- Within an area designated as an erosion hazard, or landslide hazard.
- Within 50 feet from the top of slopes that are greater than 20%.
- For properties with known soil or ground water contamination (typically federal Superfund sites or state cleanup sites under the Model Toxics Control Act (MTCA)):
  - Within 100 feet of an area known to have deep soil contamination;
  - Where ground water modeling indicates infiltration will likely increase or change the direction of the migration of pollutants in the ground water;
  - Wherever surface soils have been found to be contaminated unless those soils are removed within 10 horizontal feet from the infiltration area;
  - Any area where these facilities are prohibited by an approved cleanup plan under the state Model Toxics Control Act or Federal Superfund Law, or an environmental covenant under Chapter 64.70 RCW.
- Within 100 feet of a closed or active landfill.
- Within 100 feet of a drinking water well, or a spring used for drinking water supply, if the pavement is a pollution-generating surface.
- Within 10 feet of a small on-site sewage disposal drainfield, including reserve areas, and grey water reuse systems. For setbacks from a "large on-site sewage disposal system", see Chapter 246-272B WAC.
- Within 10 feet of any underground storage tank and connecting underground pipes, regardless of tank size. As used in these criteria, an underground storage tank means any tank used to store petroleum

products, chemicals, or liquid hazardous wastes of which 10% or more of the storage volume (including volume in the connecting piping system) is beneath the ground surface.

- At multi-level parking garages, and over culverts and bridges.
- Where the site design cannot avoid putting pavement in areas likely to have long-term excessive sediment deposition after construction (e.g., construction and landscaping material yards).
- Where the site cannot reasonably be designed to have a porous asphalt surface at less than 5 percent slope, or a pervious concrete surface at less than 10 percent slope, or a permeable interlocking concrete pavement surface (where appropriate) at less than 12 percent slope. Grid systems upper slope limit can range from 6 to 12 percent; check with manufacturer and local supplier.
- Where the native soils below a pollution-generating permeable pavement (e.g., road or parking lot) do not meet the soil suitability criteria for providing treatment. See SSC-6 in Section 3.3.7 of Volume III. Note: In these instances, the local government has the option of requiring a six-inch layer of media meeting the soil suitability criteria or the sand filter specification as a condition of construction.
- Where seasonal high ground water or an underlying impermeable/low permeable layer would create saturated conditions within one foot of the bottom of the lowest gravel base course.
- Where underlying soils are unsuitable for supporting traffic loads when saturated. Soils meeting a California Bearing Ratio of 5% are considered suitable for residential access roads.
- Where appropriate field testing indicates soils have a measured (a.k.a., initial) native soil saturated hydraulic conductivity less than 0.3 inches per hour. (Note: In these instances, unless other infeasibility restrictions apply, roads and parking lots may be built with an underdrain, preferably elevated within the base course, if flow control benefits are desired.)
- Roads and areas that bear more than very low traffic volumes or very low truck traffic. ~~Where the r~~Roads ~~type is~~ classified as arterial or collector ~~rather than access. See~~ (~~-~~See RCW 35.78.010, RCW 36.86.070, ~~and~~ RCW 47.05.021, and the WSDOT Functional Classification Map) generally receive more than very low traffic volumes or very low truck traffic. Residential access roads generally receive only very low traffic volume and very low truck traffic. Note: This infeasibility criterion does not extend to sidewalks and other non-traffic bearing surfaces. ~~- associated with the collector or arterial~~.
- Where replacing existing impervious surfaces unless the existing surface is a non-pollution generating surface over an outwash soil with a saturated hydraulic conductivity of four inches per hour or greater.

- At sites defined as "high use sites" in Volume IV of the this manualSMMWW.
- In areas with "industrial activity" as identified in 40 CFR 122.26(b)(14).
- Where the risk of concentrated pollutant spills is more likely such as gas stations, truck stops, and industrial chemical storage sites.
- Where routine, heavy applications of sand occur in frequent snow zones to maintain traction during weeks of snow and ice accumulation.

A local government may designate geographic areas within which permeable pavement, or certain permeable pavement applications, may be designated as infeasible due to year-round, seasonal or periodic high groundwater conditions, or due to inadequate infiltration rates. Designations must be based upon a preponderance of field data, collected within the area of concern, that indicate a high likelihood of failure to achieve the minimum groundwater clearance or infiltration rates identified in the above infeasibility criteria. The local government must develop a technical report, and make it available upon request by the Dept. of Ecology. The technical report must be authored by (a) professional(s) with appropriate expertise (e.g., registered engineer, geologist, hydrogeologist, or certified soil scientist), and document the location and pertinent values/observations of data that were used to recommend the designation and boundaries for the geographic area. The types of pertinent data include:

- Standing water heights or evidence of recent saturated conditions in observation wells, test pits, test holes, and well logs.
- Observations of areal extent and time of surface ponding
- Results of infiltration tests

- ~~Most lowland western Washington areas do not fit this criterion.~~

Design Guidelines

~~The design guidance from the *Low Impact Development Technical Guidance Manual for Puget Sound* should be used for design details. Local governments can adopt alternative design criteria. As long as those criteria do not conflict with the critical design criteria below, the permeable pavement may be entered into approved runoff models as indicated in Appendix III-C of Volume III, and as indicated in WWHM guidance due for publication in 2012.~~ Ecology has listed below the critical design criteria you must consider when designing permeable pavement. Local governments can adopt alternative design criteria, as long as it does not conflict with the criteria listed below. For modeling guidance of permeable pavements, refer to Appendix III-C of Volume III, and the 2012 WWHM User Manual.

You can find additional guidance for permeable pavement design in the *LID Technical Guidance Manual for Puget Sound* (2012).

Note that the *LID Technical Guidance Manual for Puget Sound* (2012) is for additional informational purposes only. You must follow the guidance within this manual if there are any discrepancies between this manual and the *LID Technical Guidance Manual for Puget Sound* (2012).

Subgrade

- Compact the subgrade to the minimum necessary for structural stability. Two guidelines currently used to specify subgrade compaction are "firm and unyielding" (qualitative), and 90- 92% Standard Proctor (quantitative). Do not allow heavy compaction due to heavy equipment operation. The subgrade should not be subject to truck traffic.
- To prevent compaction when installing the aggregate base, the following steps (back-dumping) should be followed: 1) the aggregate base is dumped onto the subgrade from the edge of the installation and aggregate is then pushed out onto the subgrade; 2) trucks then dump subsequent loads from on top of the aggregate base as the installation progresses.
- Use on soil types A through C.

Separation or Bottom Filter Layer (recommended but optional)

- A layer of sand or crushed stone (0.5 inch or smaller) graded flat is recommended to promote infiltration across the surface, stabilize the base layer, protect underlying soil from compaction, and serve as a transition between the base course and the underlying geotextile material.

Base material

- Local governments should adopt their own minimum base material requirements as they see necessary for support of flexible pavements. Many design combinations are possible. The material must be free draining. ~~For more detailed specifications and options for different types of permeable pavement, see the *LID Technical Guidance Manual for the Puget Sound Basin*.~~ The municipality should determine and publish estimates of the void space for each standard base material allowed in their jurisdiction.
- To increase infiltration, improve flow attenuation and reduce structural problems associated with subgrade erosion on slopes, impermeable check dams may be placed on the subgrade and below the pavement surface (See Figure 5.3.6). Check dams should have an overflow drain invert placed at the maximum ponding depth. The distance between berms will vary depending on slope, flow control goals and cost.

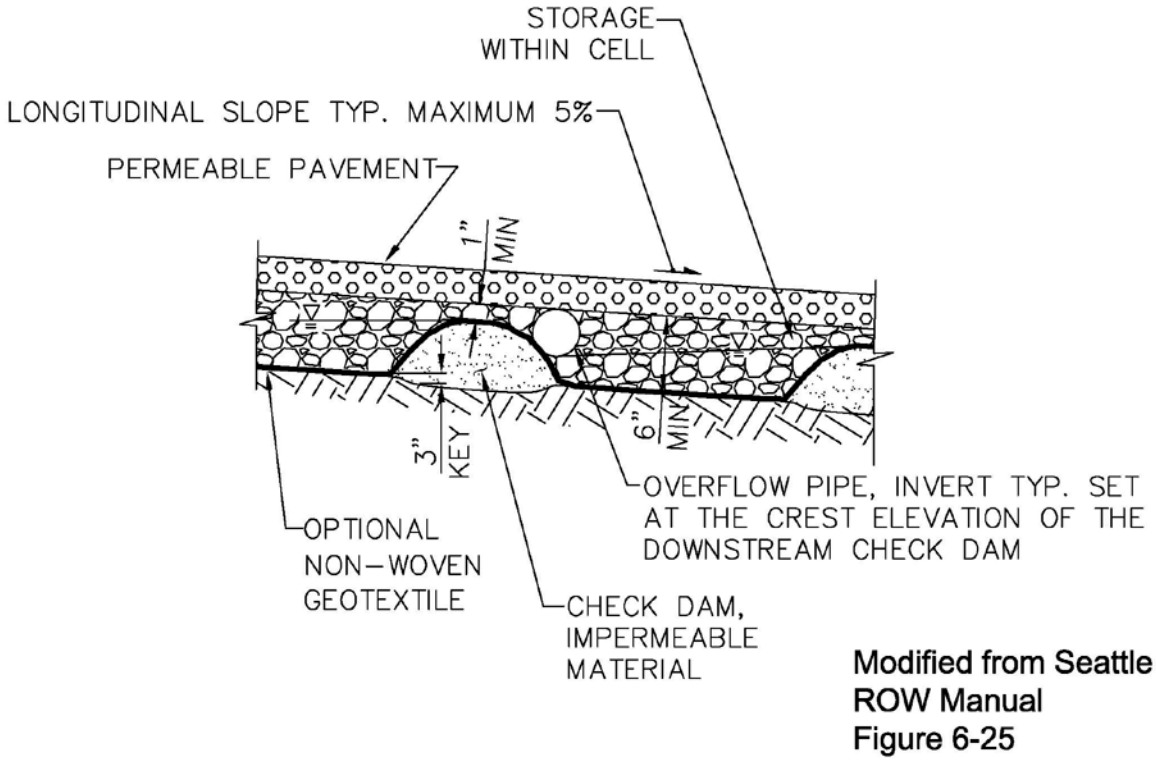

Figure 5.3.6 – Example of a check dam along a sloped section of permeable pavement

Wearing layer

- For all surface types, a minimum initial infiltration rate of 20~~10~~ inches per hour is necessary. To improve the probability of long-term performance, significantly higher initial infiltration rates are desirable.
- ***Porous Asphalt:*** Products must have adequate void spaces through which water can infiltrate. A void space within the range of 16 – 25% is typical. ~~See the *LID Technical Guidance Manual for the Puget Sound Basin* for recommended specifications.~~
- ***Pervious Concrete:*** Products must have adequate void spaces through which water can infiltrate. A void space within the range of 15 – 35% is typical. ~~See the *LID Technical Guidance Manual for the Puget Sound Basin* for recommended specifications. The aforementioned manual defers to the specifications in ACI 522~~.
- ***Grid/lattice systems filled with gravel, sand, or a soil of finer particles with or without grass****:* The fill material must be at least a minimum of 2 inches of sand, gravel, or soil.
- ***Permeable Interlocking Concrete Pavement and Aggregate Pavers*:** Pavement joints should be filled with No. 8, 89 or 9 stone. ~~See the LID Technical Guidance Manual for the Puget Sound Basin for recommended specifications. The aforementioned manual defers to design specification and installation procedures published by the Interlocking Concrete Pavement Institute.~~

Drainage conveyance

Roads should still be designed with adequate drainage conveyance facilities as if the road surface was impermeable. Roads with base courses that extend below the surrounding grade should have a designed drainage flow path to safely move water away from the road prism and into the roadside drainage facilities. Use of perforated storm drains to collect and transport infiltrated water from under the road surface will result in less effective designs and less flow reduction benefit.

Underdrains

Note that if an underdrain is placed at or near the bottom of the aggregate base in a permeable pavement design, the permeable pavement is no longer considered an LID BMP and cannot be used to satisfy Minimum Requirement #5. However, designs utilizing an underdrain that is elevated within the aggregate base course to protect the pavement wearing course from saturation is considered an LID BMP and can be used to satisfy Minimum Requirement #5. See Appendix III-C and the WWHM Users Manual for guidance in modeling permeable pavements with underdrains.

Acceptance test

- Driveways can be tested by simply throwing a bucket of water on the surface. If anything other than a scant amount puddles or runs off the surface, additional testing is necessary prior to accepting the construction.
- Roads may be initially tested with the bucket test. In addition, test the initial infiltration with a 6-inch ring, sealed at the base to the road surface, or with a sprinkler infiltrometer. Wet the road surface continuously for 10 minutes. Begin test to determine compliance with 20 inches per hour minimum rate. Use of ASTM C1701 is also recommended.

Stormwater-related Design Procedures

See Section 3.4 in Volume III of this manual for more specific guidance regarding required field testing, assignment of infiltration rate correction factors, project submission requirements, and modeling.

Runoff Model Representation

See Appendix III-C for runoff modeling guidance under WWHM3 and under WWHM 2012.

Maintenance

Maintenance recommendations for all facilities:

- Erosion and introduction of sediment from surrounding land uses should be strictly controlled after construction by amending exposed soil with compost and mulch, planting exposed areas as soon as possible, and armoring outfall areas.
- Surrounding landscaped areas should be inspected regularly and possible sediment sources controlled immediately.
- Installations can be monitored for adequate or designed minimum infiltration rates by observing drainage immediately after heavier rainstorms for standing water or infiltration tests using ASTM C1701.
- Clean permeable pavement surfaces to maintain infiltration capacity at least once or twice annually following recommendations below.
- Utility cuts should be backfilled with the same aggregate base used under the permeable paving to allow continued conveyance of stormwater through the base, and to prevent migration of fines from the standard base aggregate to the more open graded permeable base material (Diniz, 1980).
- Ice build up on permeable pavement is reduced and the surface becomes free and clear more rapidly compared to conventional pavement. For western Washington, deicing and sand application may be reduced or eliminated and the permeable pavement installation should be assessed during winter months and the winter traction program developed from those observations. Vacuum and sweeping frequency will likely be required more often if sand is applied.

Porous asphalt and pervious concrete

- Clean surfaces using suction, sweeping with suction or high-pressure wash and suction (sweeping alone is minimally effective). Hand held pressure washers are effective for cleaning void spaces and appropriate for smaller areas such as sidewalks.
- Small utility cuts can be repaired with conventional asphalt or concrete if small batches of permeable material are not available or are too expensive.

Permeable pavers

- ICPI recommends cleaning if the measured infiltration rate falls below 10 in/hr.
- Use sweeping with suction when surface and debris are dry 1-2 times annually (see next bullet for exception). Apply vacuum to a paver test section and adjust settings to remove all visible sediment without excess uptake of aggregate from paver openings or joints. If necessary replace No 8, 89 or 9 stone to specified depth within the paver openings. Washing or power washing should not be used to remove debris and sediment in the openings between the pavers (Smith, 2000).
- For badly clogged installations, wet the surface and vacuumed aggregate to a depth that removes all visible fine sediment and replace with clean aggregate.
- I-f necessary use No 8, 89 or 9 stone for winter traction rather than sand (sand will accelerate clogging).
- Pavers can be removed individually and replaced when utility work is complete.
- Replace broken pavers as necessary to prevent structural instability in the surface.
- The structure of the top edge of the paver blocks reduces chipping from snowplows. For additional protection, skids on the corner of plow blades are recommended.
- For a model maintenance agreement see Permeable Interlocking Concrete Pavements (Smith, 2011).

Plastic or Concrete grid systems

- Remove and replace top course aggregate if clogged with sediment or contaminated (vacuum trucks for stormwater collection basins can be used to remove aggregate).
- Remove and replace grid segments where three or more adjacent rings are broken or damaged.
- Replenish aggregate material in grid as needed.
- Snowplows should use skids to elevate blades slightly above the gravel surface to prevent loss of top course aggregate and damage to plastic grid.
- For grass installations, use normal turf maintenance procedures except do not aerate. Use very slow release fertilizers if needed.

BMP T5.16: Tree Retention and Tree Planting

Purpose and Definition

Trees provide flow control via interception, transpiration, and increased infiltration. Additional environmental benefits include improved air quality, carbon sequestration, reduced heat island effect, pollutant removal, and habitat preservation or formation.

When implemented in accordance with the criteria outlined below, retained and newly planted trees receive credits toward meeting flow control requirements.

The degree of flow control provided by a tree depends on the tree type (i.e., evergreen or deciduous), canopy area, and whether or not the tree canopy overhangs impervious surfaces. Flow control credits may be applied to project sites of all sizes.

Tree Retention Design Criteria

Setbacks of proposed infrastructure from existing trees are critical considerations. Tree protection requirements limit grading and other disturbances in proximity to the tree.

Existing tree species and location must be clearly shown on submittal drawings.

Trees must be viable for long-term retention (i.e., in good health and compatible with proposed construction).

Tree size: To receive flow control credit, retained trees shall have a minimum 6 inches diameter at breast height (DBH). DBH is defined as the outside bark diameter at 4.5 feet above the ground on the uphill side of a tree. For existing trees smaller than this, the newly planted tree credit may be applied.

The retained tree canopy area shall be measured as the area within the tree drip line. A drip line is the line encircling the base of a tree, which is delineated by a vertical line extending from the outer limit of a tree's branch tips down to the ground. If trees are clustered, overlapping canopies are not double counted.

Tree location: Flow control credit for retained trees depends upon proximity to ground level impervious or other hard surfaces. To receive a credit, the existing tree must be on the development site and within 20 feet of new and/or replaced ground level impervious or other hard surfaces (e.g., driveway or patio) on the development site. Distance from impervious or other hard surfaces is measured from the tree trunk center.

An arborist report may be required if impervious surface is proposed within the critical root zone of the existing tree. The critical root zone is defined as the line encircling the base of the tree with half the diameter of the dripline. If the arborist report concludes that impervious surface should not be placed within 20 feet of the tree and canopy overlap with impervious surface is still anticipated given a longer setback, the higher tree flow control credit may be approved.

Protection during construction: The existing tree roots, trunk, and canopy shall be fenced and protected during construction activities.

Retention and protection: Trees shall be retained, maintained and protected on the site after construction and for the life of the development or until any approved redevelopment occurs in the future. Trees that are removed or die shall be replaced with like species during the next planting season (typically in fall). Trees shall be pruned according to industry standards (ANSI A 300 standards).

Tree Retention Flow Control Credit

Flow control credits for retained trees are provided in Table 5.3.1 by tree type. These credits can be applied to reduce impervious or other hard surface area requiring flow control. Credits are given as a percentage of the existing tree canopy area. The minimum credit for existing trees ranges from 50 to 100 square feet.

Table 5.3.1 Flow Control Credits for Retained Trees.

Tree Type	Credit
Evergreen	20% of canopy area (minimum of 100 sq. ft./tree
Deciduous	10% of canopy area (minimum of 50 sq. ft./tree

Impervious/Hard Surface Area Mitigated =
(Σ Evergreen Canopy Area x .2) + (Σ Deciduous Canopy Area x 0.1)

Tree credits are not applicable to trees in native vegetation areas used for flow dispersion or other flow control credit. Credits are also not applicable to trees in planter boxes. The total tree credit for retained and newly planted trees shall not exceed 25 percent of impervious or other hard surface requiring mitigation.

Newly Planted Tree Design Criteria

Tree Species: Each jurisdiction should adopt a list of approved tree species for stormwater credit. An example list of trees from the City of Seattle's tree list is included in Appendix V-E.

Tree Size: To receive flow control credit, new deciduous trees at the time of planting shall be at least 1.5 inches in diameter measured 6 inches above the ground. New evergreen trees shall be at least 4 feet tall.

Tree Location: Trees shall be sited according to sun, soil, and moisture requirements. Planting locations shall be selected to ensure that sight distances and appropriate setbacks are maintained given mature height, size, and rooting depths. Similar to retained trees, flow control credit for newly planted trees depends upon proximity to ground level impervious surfaces. To receive a credit, the tree must be planted on the development site and within 20 feet of new and/or replaced ground level impervious surfaces (e.g., driveway, patio, or parking lot). Distance from impervious

surfaces is measured from the edge of the surface to the center of the tree at ground level. To help ensure tree survival and canopy coverage, the minimum tree spacing for newly planted trees shall accommodate mature tree spread. In no circumstance shall flow control credit be given for new tree density exceeding 10 feet on center spacing.

Plant Material and Planting Specifications

Recommended guidelines for planting materials and methods are provided in City of Seattle Standard Specifications 8-02 and 9-14, and Standard Plans 100a, 100b, and 101.

Irrigation: Provisions shall be made for supplemental irrigation during the first three growing seasons after installation to help ensure tree survival.

Tree retention and protection: Trees shall be retained, maintained and protected on the site after construction and for the life of the development as required for retained trees.

Newly Planted Tree Flow Control Credits

Flow control credits for newly planted trees are provided in Table 5.3.2 by tree type. These credits can be applied to reduce the impervious or other hard surface area requiring flow control. Credits range from 20 to 50 square feet per tree.

Table 5.3.2. Flow Control Credits for Newly Planted Trees.

Tree Type	Credit
Evergreen	50 sq. ft. per tree
Deciduous	20 sq. ft. per tree

Impervious/Hard Surface Area Mitigated = Σ Number of Trees x Credit (sq. ft.)

Tree credits are not applicable to trees in native vegetation areas used for flow dispersion or other flow control credit. Credits are also not applicable to trees in planter boxes. The total tree credit for retained and newly planted trees shall not exceed 25 percent of impervious or other hard surface requiring mitigation.

BMP T5.17: Vegetated Roofs

Purpose and Definition

Vegetated roofs (also known as ecoroofs and green roofs) are thin layers of engineered soil and vegetation constructed on top of conventional flat or sloped roofs. Vegetated roofs can provide multiple benefits, including stormwater volume reduction and flow attenuation. The range of benefits for a green roof depends on a number of design factors such as plant selection, depth and composition of soil mix, location of the roof, orientation and slope, weather patterns, and the maintenance plan.

All vegetated roofs consist of four basic components: a waterproof membrane, a drainage layer, a light-weight growth medium, and vegetation (see Figure 5.3.7). In addition to these basic components, many systems may also incorporate a protection layer and root barrier to preserve the integrity of the waterproof membrane, a separation/filter layer to stabilize fine particles, capillary mats and mulch/mats to retain moisture and prevent surface erosion due to rain and wind scour.

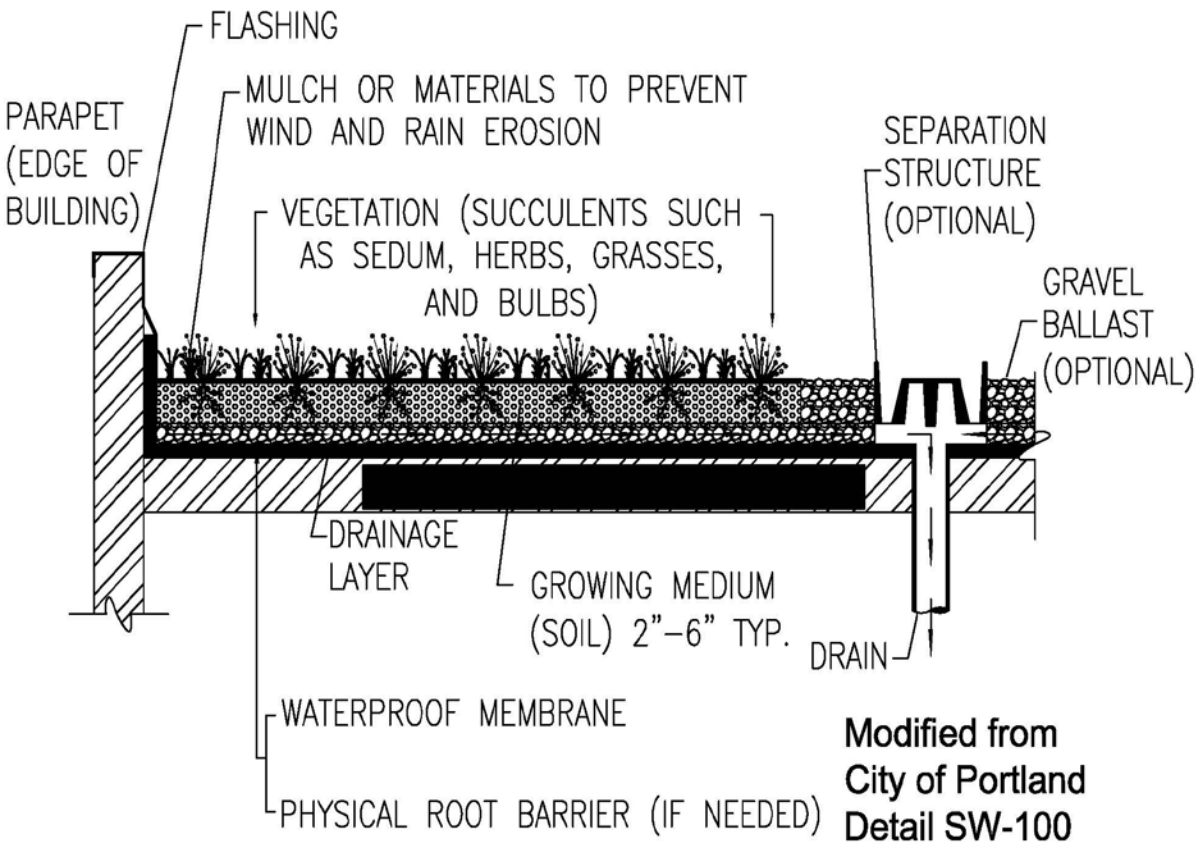

Figure 5.3.7 – Example of a Vegetated Roof Section

Applications and Limitations

While vegetated roofs can be installed on slopes up to 40 degrees, slopes between 5 and 20 degrees (1:12 and 5:12) are most suitable and can provide natural drainage by gravity. Roofs with slopes greater than 10 degrees (2:12) require an analysis of engineered slope stability.

Vegetated roofs are not included in the lists referenced under Minimum Requirement #5. However, they are an option available to project designers who want to use other methods to meet the LID Performance Standard option of Minimum Requirement #5.

Design Criteria

The reader is directed to the *LID Technical Guidance Manual for ~~the~~ Puget Sound* (2012)~~Basin~~, for a more detailed description of the components of and design criteria for vegetated roofs. It also includes references to other sources of information and design guidance.

Note that the *LID Technical Guidance Manual for Puget Sound* (2012) is for additional informational purposes only. You must follow the guidance within this manual if there are any discrepancies between this manual and the *LID Technical Guidance Manual for Puget Sound* (2012).

Runoff Model Representation

See Appendix III-C in Volume III for a summary of how vegetated roofs may be entered into the approved continuous runoff models.

BMP T5.18: Reverse Slope Sidewalks

Purpose and Definition

Reverse slope sidewalks are sloped to drain away from the road and onto adjacent vegetated areas.

Design Criteria

- Greater than 10 feet of vegetated surface downslope that is not directly connected into the storm drainage system.
- Vegetated area receiving flow from sidewalk must be native soil or meet guidelines in BMP T5.13.

Runoff Model Representation

- In WWHM 3, enter sidewalk area as lawn/landscaped area over the underlying soil type. For WWHM 2012, see Appendix III-C in Volume III.

BMP T5.19: Minimal Excavation Foundations

Purpose and Definition

Low impact foundations are defined as those techniques that do not disturb, or minimally disturb the natural soil profile within the footprint of the structure. This preserves most of the hydrologic properties of the native soil. Pin foundations are an example of a minimal excavation foundation.

Applications and Limitations

- To minimize soil compaction, heavy equipment cannot be used within or immediately surrounding the building. Terracing of the foundation area may be accomplished by tracked, blading equipment not exceeding 650 psf.

Runoff Model

- Where residential roof runoff is dispersed on the up gradient side of a

Representation

structure in accordance with the design criteria and guidelines in BMP T5.10B, the tributary roof area may be modeled as pasture on the native soil.

- Where "step forming" is used on a slope, the square footage of roof that can be modeled as pasture must be reduced to account for lost soils. In "step forming," the building area is terraced in cuts of limited depth. This results in a series of level plateaus on which to erect the form boards. The following equation (suggested by Rick Gagliano of Pin Foundations, Inc.) can be used to reduce the roof area that can be modeled as pasture.

$$A_1 - \frac{dC(.5)}{dP} X A_1 = A_2$$

A_1 = roof area draining to up gradient side of structure

dC = depth of cuts into the soil profile

dP = permeable depth of soil (The A horizon plus an additional few inches of the B horizon where roots permeate into ample pore space of soil).

A_2 = roof area that can be modeled as pasture on the native soil

- If roof runoff is dispersed down gradient of the structure in accordance with the design criteria and guidelines in BMP T5.10B, AND there is at least 50 feet of vegetated flow path through native material or lawn/landscape area that meets the guidelines in BMP T5.13, the tributary roof areas may be modeled as lawn/landscaped area.

BMP T5.20: Rainwater Harvesting

Purpose and Definition

Rainwater harvesting is the capture and storage of rainwater for beneficial use. Roof runoff may be routed to cisterns for storage and nonpotable uses such as irrigation, toilet flushing, and cold water laundry. Rainwater harvesting can help reduce peak stormwater flows, durations, and volumes. The amount of reduction achieved with cistern storage is a function of contributing area, storage volume, and rainwater use rate.

Design Criteria

- 100% reuse of the annual average runoff volume (use continuous runoff model to get annual average for drainage area).
- System designs involving interior uses must have a monthly water balance that demonstrates adequate capacity for each month and reuse of all stored water annually.

Runoff Model Representation

- Do not enter drainage area into the runoff model.

Other Criteria

- Restrict use to 4 homes/acre housing and lower densities when the captured water is solely for outdoor use.

BMP T5.30: Full Dispersion

Purpose and Definition

This BMP allows for "fully dispersing" runoff from impervious surfaces and cleared areas of development sites that protect at least 65% of the site (or a threshold discharge area on the site) in a forest or native condition.

Applications and Limitations ~~***for Residential Projects***~~

- Rural single family residential developments should use these dispersion BMPs wherever possible to minimize effective impervious surface to less than 10% of the development site.
- Other types of development that retain 65% of the site (or a threshold discharge area on the site) in a forested or native condition may also use these BMPs to avoid triggering the flow control facility requirement.
- The preserved area may be a previously cleared area that has been replanted in accordance with native vegetation landscape specifications described within this BMP.
- The preserved area should be situated to minimize the clearing of existing forest cover, to maximize the preservation of wetlands (though the wetland area and any streams and lakes do not count toward the 65% forest or native condition area), and to buffer stream corridors.
- The preserved area should be placed in a separate tract or protected through recorded easements for individual lots.
- The preserved area should be shown on all property maps and should be clearly marked during clearing and construction on the site.
- All trees within the preserved area at the time of permit application shall be retained, aside from approved timber harvest activities regulated under WAC Title 222, except for Class IV General Forest Practices that are conversions from timberland to other uses, and the removal of dangerous or diseased trees.
- The preserved area may be used for passive recreation and related facilities, including pedestrian and bicycle trails, nature viewing areas, fishing and camping areas, and other similar activities that do not require permanent structures, provided that cleared areas and areas of compacted soil associated with these areas and facilities do not exceed eight percent of the preserved area.
- The preserved area may contain utilities and utility easements, but not septic systems. Utilities are defined as potable and wastewater underground piping, underground wiring, and power and telephone poles.

Minimum Design Requirements for Residential Projects

Developments that preserve 65% of a site (or a threshold discharge area of a site) in a forested or native condition, can disperse runoff from the developed portion of the site into the native vegetation area as long as the developed areas draining to the native vegetation do not have impervious areas that exceed 10% of the entire site.

Where a development has less than 65% of a site available to maintain or create into a forested or native condition, that area may still be used for full dispersion of a portion of the developed area. The ratio of the native vegetation area to the impervious area, which is d~~s~~ipersed into the native vegeatation area. The lawn and landscaped area must comply with BMP T5.13. All design requirements listed also must be met.

The portion of the developed area which is not managed through full dispersion can be considered a separate project site. It must be evaluated against the thresholds in Figures 2.2 and 2.3 of Volume 1, whichever is appropriate, to determine the applicable minimum requirements.

Additional impervious~~ and lawn/landscaped~~ areas above the 10% are allowed, but should not drain to the native vegetation area, and are subject to the thresholds, treatment and flow control requirements of this stormwater manual.

Within the context of this dispersion option, the~~ only~~ impervious surfaces that are ~~ineffective are those that are~~over and above the 10% maximum can be routed into an appropriately sized dry well or into an infiltration basin that meets the flow control standard and does not overflow into the forested or native vegetation area.

Runoff must be dispersed into the native area in accordance with one or more of the dispersion devices, and in accordance with the design criteria and limits for those devices, cited in this BMP. A native vegetation flow path of at least 100 feet in length (25 feet for sheet flow from a non-native pervious surface) must be available along the flowpath that runoff would follow upon discharge from a dispersion device cited in this BMP. The native vegetated flowpath must meet all of the following criteria:

- The flow path must be over native vegetated surface
- The flow path must be on-site or in an off-site tract or easement area reserved for such dispersion
- The slope of the flowpath must be no steeper than 15% for any 20-foot reach of the flowpath. Slopes up to 33% are allowed where level spreaders are located upstream of the dispersion area and at sites where vegetation can be established.

- The flowpath must be located between the dispersion device and any downstream drainage feature such as a pipe, ditch, stream, river, pond, lake, or wetland.
- The flowpaths for adjacent dispersion devices must be sufficiently spaced to prevent overlap of flows in the flowpath areas.

For sites with on-site sewage disposal systems, the discharge of runoff from dispersion devices must be located downslope of the primary and reserve drainfield areas. This requirement may be waived by the permitting jurisdiction if site topography clearly prevents discharged flows from intersecting the drainfield.

Dispersion devices are not allowed in critical area buffers or on slopes steeper than 20%. Dispersion devices proposed on slopes steeper than 15% or within 50 feet of a geologically hazardous area (RCW 36.70A.030(5) must be approved by a geotechnical engineer or engineering geologist.

The dispersion of runoff must not create flooding or erosion impacts.

- **Roof Downspouts**

  Roof surfaces that comply with the Downspout Full Infiltration BMP T5.10A, are considered to be "fully infiltrated" (i.e., zero percent effective imperviousness). All other roof surfaces are considered to be "fully dispersed" (i.e., at or approaching zero percent effective imperviousness) only if they are within a threshold discharge area that is or will be more than 65% forested (or native vegetative cover) and less than 10% impervious (total), AND if they either: 1) comply with the Downspout Dispersion requirements of BMP T5.10B, but with vegetated flow paths of 100 feet or more through the native vegetation preserved area; or 2) disperse the roof runoff along with the road runoff in accordance with the roadway dispersion BMP section below.

- **Driveway Dispersion**

  Driveway surfaces are considered to be "fully dispersed" if they are within a threshold discharge area that is or will be more than 65% forested (or native vegetative cover) and less than 10% impervious (total), AND if they either: 1) comply with BMP 5.11 for concentrated flow and BMP T5.12 for sheet flow- and have flow paths of 100 feet or more through native vegetation; or, 2) disperse driveway runoff along with the road runoff in accordance with the roadway dispersion BMP section below.

- **Roadway Dispersion BMPs**

  Roadway surfaces are considered to be "fully dispersed" if they are within a threshold discharge area that is or will be more than 65% forested (or native vegetative cover) and less than 10% impervious

(total), AND if they comply with the following dispersion requirements:

1. The road section shall be designed to minimize collection and concentration of roadway runoff. Sheet flow over roadway fill slopes (i.e., where roadway subgrade is above adjacent right-of-way) should be used wherever possible to avoid concentration.
2. When it is necessary to collect and concentrate runoff from the roadway and adjacent upstream areas (e.g., in a ditch on a cut slope), concentrated flows shall be incrementally discharged from the ditch via cross culverts or at the ends of cut sections. These incremental discharges of newly concentrated flows shall not exceed 0.5 cfs at any one discharge point from a ditch for the 100-year runoff event. Where flows at a particular ditch discharge point were already concentrated under existing site conditions (e.g., in a natural channel that crosses the roadway alignment), the 0.5-cfs limit would be in addition to the existing concentrated peak flows.
3. Ditch discharge points with up to 0.2 cfs discharge for the peak 100-year flow shall use rock pads or dispersion trenches to disperse flows. Ditch discharge points with between 0.2 and 0.5 cfs discharge for the 100-year peak flow shall use only dispersion trenches to disperse flows.
4. Dispersion trenches shall be designed to accept surface flows (free discharge) from a pipe, culvert, or ditch end, shall be aligned perpendicular to the flowpath, and shall be minimum 2 feet by 2 feet in section, 50 feet in length, filled with ¾-inch to 1½-inch washed rock, and provided with a level notched grade board (see Figure 5.3.2). Manifolds may be used to split flows up to 2 cfs discharge for the 100-year peak flow between up to 4 trenches. Dispersion trenches shall have a minimum spacing of 50 feet between centerlines.
5. Flowpaths from adjacent discharge points must not intersect within the 100-foot flowpath lengths, and dispersed flow from a discharge point must not be intercepted by another discharge point. To enhance the flow control and water quality effects of dispersion, the flowpath shall not exceed 15% slope, and shall be located within designated open space.

   Note: Runoff may be conveyed to an area meeting these flowpath criteria.
6. Ditch discharge points shall be located a minimum of 100 feet upgradient of steep slopes (i.e., slopes steeper than 40%), wetlands, and streams.
7. Where the Local Plan Approval Authority determines there is a potential for significant adverse impacts downstream (e.g., erosive steep slopes or existing downstream drainage problems),

dispersion of roadway runoff may not be allowed, or other measures may be required.

- **Cleared Area Dispersion BMPs**

The runoff from cleared areas that are comprised of bare soil, non-native landscaping, lawn, and/or pasture of up to 25 feet in flow path length can be considered to be "fully dispersed" if it is dispersed through at least 25 feet of native vegetation in accordance with the following criteria:

1. The topography of the non-native pervious surface must be such that runoff will not concentrate prior to discharge to the dispersal area.
2. Slopes within the dispersal area should be no steeper than 15%.

If the width of the non-native pervious surface is greater than 25 feet, the vegetated flowpath segment must be extended 1 foot for every 3 feet of width beyond 25 feet up to a maximum width of 250 feet.

Minimum Design Requirements for Public Road Projects

Applicability:

These criteria apply to the construction of public roads not within the context of residential, commercial, or industrial site development. They will likely only be implementable on roads outside of the urban growth ~~management~~ areas where roadside areas are not planned for urban density development.

1) Uncollected or natural dispersion into adjacent vegetated areas (i.e., sheet flow into the dispersion area)

   Full dispersion credit (i.e. no other treatment or flow control required) for sites that meet the following criteria:

   a) *Outwash soils* (Type A – sands and sandy gravels, possibly some Type B – loamy sands) that have an initial saturated hydraulic conductivity rate of 4 inches per hour or greater. The saturated hydraulic conductivity must be based on a Pilot Infiltration Test or the Soil Grain Size Analysis method as identified in Section 3 of Volume III, or another method as allowed by the local government.
      - Up to 20 feet of impervious flow path needs 10 feet of dispersion area width.
      - Each additional foot of impervious flow path needs 0.25 feet of dispersion area width.

   b) *Other soils:* (Types C and D and some Type B not meeting the criterion in 1a above)
      - Dispersion area must have 6.5 feet of width for every 1 foot width of impervious area draining to it. A minimum distance of 100 feet is necessary.

c) *Criteria applicable to all soil types:*
   - Depth to the average annual maximum ground water elevation should be at least 3 feet.
   - Impervious surface flow path must be ≤ 75 ft. Pervious flow path must be ≤ 150 ft. Pervious flow paths are up-gradient road side slopes that run onto the road and down-gradient road side slopes that precede the dispersion area.
   - Lateral slope of impervious drainage area should be ≤ 8%. Road side slopes must be ≤ 25%. Road side slopes do not count as part of the dispersion area unless native vegetation is re-established and slopes are less than 15%. Road shoulders that are paved or graveled to withstand occasional vehicle loading count as impervious surface.
   - Longitudinal slope of road should be ≤ 5%.
   - Length of dispersion area should be equivalent to length of road.
   - Average longitudinal (parallel to road) slope of dispersion area should be ≤ 15%.
   - Average lateral slope of dispersion area should be ≤ 15%.

2) <u>Channelized (collected and re-dispersed) stormwater into areas with (a) native vegetation or (b) cleared land in areas outside of Urban Growth Areas that do not have a natural or man-made drainage system.</u>

   Full dispersion credit (i.e., no other treatment or flow control required) is given to projects that meet the following criteria:

   a) *Outwash soils* (Type A – sands and sandy gravels, possibly some Type B – loamy sands) that have an initial saturated hydraulic conductivity rate of 4 inches per hour or greater. The saturated hydraulic conductivity must be based on field results using procedures (Pilot Infiltration Test or Soil Grain Size Analysis Method) identified in Section 3 of Volume III, or another method approved by the local government.
      - Dispersion area should be at least ½ of the impervious drainage area.

   b) Other soils: (Types C and D and some Type B not meeting the criterion in 2a above)
      - Dispersion area must have 6.5 feet of width for every 1 foot width of impervious area draining to it. A minimum distance of 100 feet is necessary.

   c) *Other criteria applicable to all soil types*:
      - Depth to the average annual maximum ground water elevation should be at least three feet.

- Channelized flow must be re-dispersed to produce longest possible flow path.
- Flows must be evenly dispersed across the dispersion area.
- Flows must be dispersed using rock pads and dispersion techniques as specified under Roadway Dispersion BMPs.
- Approved energy dissipation techniques may be used.
- Limited to on-site (associated with the road) flows.
- Length of dispersion area should be equivalent to length of the road.
- Average longitudinal and lateral slopes of the dispersion area should be $\leq$ 8%.
- The slope of any flowpath segment must be no steeper than 15% for any 20-foot reach of the flowpath segment.

3) Engineered dispersion of stormwater runoff into an area with engineered soils

Full dispersion credit (i.e., no other treatment or flow control required) is given to projects that meet the following criteria:

- Stormwater can be dispersed via sheet flow or via collection and re-dispersion in accordance with the techniques specified under Roadway Dispersion BMPs.
- Depth to the average annual maximum ground water elevation should be at least three feet.
- Type C and D soils must be compost-amended following guidelines in BMP T5.13. The guidance document *Guidelines and Resources for Implementing Soil Quality and Depth BMP T5.13 in WDOE Stormwater Management Manual for Western Washington* can be used, or an approved equivalent soil quality and depth specification approved by the Department of Ecology. The guidance document is available at http://www.soilsforsalmon.org.
    - Dispersion area must meet the 65 to 10 ratio for full dispersion credit.
- Type A and B soils that meet or exceed the 4 inches per hour initial saturated hydraulic conductivity rate minimum must be compost amended in accordance with guidelines in BMP T5.13. Compost must be tilled into the soil in accordance with the guidance document cited above.
    - Up to 20 feet of impervious flow path needs 10 feet of dispersion area width.
    - Each additional foot of impervious flow path needs 0.25 feet of dispersion area width.

- Average longitudinal (parallel to road) slope of dispersion area should be ≤ 15%.
- Average lateral slope of dispersion area should be ≤ 15%.
- The dispersion area should be planted with native trees and shrubs.

4) Other Characteristics for Dispersal areas
   - Dispersal areas must be outside of the urban growth area; or if inside the urban growth area, in legally protected areas (easements, conservation tracts, public parks).
   - If outside urban growth areas, legal agreements should be reached with property owners of dispersal areas subject to stormwater that has been collected and is being re-dispersed.
   - An agreement with the property owner is advised for uncollected, natural dispersion via sheet flow that represents a continuation of past practice. If not a continuation of past practice, an agreement should be reached with the property owner.

Native Vegetation Landscape Specifications

These specifications may be used in situations where an applicant wishes to convert a previously developed surface to a native vegetation landscape for purposes of meeting full dispersion requirements or code requirements for forest retention. Native vegetation landscape is intended to have the soil, vegetation, and runoff characteristics approaching that of natural forestland.

Conversion of a developed surface to native vegetation landscape requires the removal of impervious surface, de-compaction of soils, and the planting of native trees, shrubs, and ground cover in compost-amended soil according to all of the following specifications:

1. Existing impervious surface and any underlying base course (e.g., crushed rock, gravel, etc.) must be completely removed from the conversion area(s).
2. Underlying soils must be broken up to a depth of 18 inches. This can be accomplished by excavation or ripping with either a backhoe equipped with a bucket with teeth, or a ripper towed behind a tractor.
3. At least 4 inches of well-decomposed compost must be tilled into the broken up soil as deeply as possible. The finished surface should be gently undulating and must be only lightly compacted.
4. The area of native vegetated landscape must be planted with native species trees, shrubs, and ground cover. Species must be selected as appropriate for site shade and moisture conditions, and in accordance with the following requirements:

a) Trees: a minimum of two species of trees must be planted, one of which is a conifer. Conifer and other tree species must cover the entire landscape area at a spacing recommended by a professional landscaper or in accordance with local requirements.

b) Shrubs**:** a minimum of two species of shrubs should be planted. Space plants to cover the entire landscape area, excluding points where trees are planted.

c) Groundcover**:** a minimum of two species of ground cover should be planted. Space plants so as to cover the entire landscape area, excluding points where trees or shrubs are planted.

Note: for landscape areas larger than 10,000 square feet, planting a greater variety of species than the minimum suggested above is strongly encouraged. For example, an acre could easily accommodate three tree species, three species of shrubs, and two or three species of groundcover.

5. At least 4 inches of hog fuel or other suitable mulch must be placed between plants as mulch for weed control. It is also possible to mulch the entire area before planting; however, an 18-inch diameter circle must be cleared for each plant when it is planted in the underlying amended soil. *Note: plants and their root systems that come in contact with hog fuel or raw bark have a poor chance of survival.*

6. Plantings must be watered consistently once per week during the dry season for the first two years.

7. The plantings must be well established on at least 90% of the converted area. A minimum of 90% plant survival is required after 3 years.

Conversion of an area that was under cultivation to native vegetation landscape requires a different treatment. Elimination of cultivated plants, grasses and weeds is required before planting and will be required on an on-going basis until native plants are well-established. The soil should be tilled to a depth of 18 inches. A minimum of 8 inches of soil having an organic content of 6 to 12 percent is required, or a four inch layer of compost may be placed on the surface before planting, or 4 inches of clean wood chips may be tilled into the soil, as recommended by a landscape architect or forester. After soil preparation is complete, continue with steps 4 through 7 above. Placing 4 inches of compost on the surface may be substituted for the hog fuel or mulch. For large areas where frequent watering is not practical, bare-root stock may be substituted at a variable spacing from 10 to 12 feet o.c. (with an average of 360 trees per acre) to allow for natural groupings and 4 to 6 feet o.c. for shrubs. Allowable bare-root stock types are 1-1, 2-1, P-1 and P-2. Live stakes at 4 feet o.c. may be substituted for willow and red-osier dogwood in wet areas.

Runoff Model Representation

Areas that are fully dispersed do not use the WWHM or other approved continuous runoff models.

5.3.2 Site Design BMPs

The two BMPs in this section are general practices for design and maintenance. They are listed here as an encouragement to project designers. The extent to which the concepts within these BMPs must be followed depends upon changes in the site development codes, rules, and standards adopted by the local government.

BMP T5.40: Preserving Native Vegetation

Purpose and Definition

Preserving native vegetation on-site to the maximum extent practicable will minimize the impacts of development on stormwater runoff. Preferably 65 percent or more of the development site should be protected for the purposes of retaining or enhancing existing forest cover and preserving wetlands and stream corridors.

Applications and Limitations

New development often takes place on tracts of forested land. In fact, building sites are often selected because of the presence of mature trees. However, unless sufficient care is taken and planning done, in the interval between buying the property and completing construction much of this resource is likely to be destroyed. The property owner is ultimately responsible for protecting as many trees as possible, with their understory and groundcover. This responsibility is usually exercised by agents, the planners, designers and contractors. It takes 20 to 30 years for newly planted trees to provide the benefits for which trees are so highly valued.

Forest and native growth areas allow rainwater to naturally percolate into the soil, recharging ground water for summer stream flows and reducing surface water runoff that creates erosion and flooding. Conifers can hold up to about 50 percent of all rain that falls during a storm. Twenty to 30 percent of this rain may never reach the ground but evaporates or is taken up by the tree. Forested and native growth areas also may be effective as stormwater buffers around smaller developments.

On lots that are one acre or greater, preservation of 65 percent or more of the site in native vegetation will allow the use of full dispersion techniques presented in BMP T5.30. Sites that can fully disperse are not required to provide runoff treatment or flow control facilities.

Design Guidelines

- The preserved area should be situated to minimize the clearing of existing forest cover, to maximize the preservation of wetlands, and to buffer stream corridors.
- The preserved area should be placed in a separate tract or protected through recorded easements for individual lots.
- If feasible, the preserved area should be located downslope from the building sites, since flow control and water quality are enhanced by flow dispersion through duff, undisturbed soils, and native vegetation.

- The preserved area should be shown on all property maps and should be clearly marked during clearing and construction on the site.

Maintenance

- Vegetation and trees should not be removed from the natural growth retention area, except for approved timber harvest activities and the removal of dangerous and diseased trees.

BMP T5.41: Better Site Design

Purpose and Definition

Fundamental hydrological concepts and stormwater management concepts can be applied at the site design phase that are:

- more integrated with natural topography,
- reinforce the hydrologic cycle,
- more aesthetically pleasing, and
- often less expensive to build.

A few site planning principles help to locate development on the least sensitive portions of a site and accommodate residential land use while mitigating its impact on stormwater quality.

Design Guidelines

- **Define Development Envelope and Protected Areas -** The first step in site planning is to define the development envelope. This is done by identifying protected areas, setbacks, easements and other site features, and by consulting applicable local standards and requirements. Site features to be protected may include important existing trees, steep slopes, erosive soils, riparian areas, or wetlands.

  By keeping the development envelope compact, environmental impacts can be minimized, construction costs can be reduced, and many of the site's most attractive landscape features can be retained. In some cases, economics or other factors may not allow avoidance of all sensitive areas. In these cases, care can be taken to mitigate the impacts of development through site work and other landscape treatments.

- **Minimize Directly Connected Impervious Areas -** Impervious areas directly connected to the storm drain system are the greatest contributors to urban nonpoint source pollution. Any impervious surface that drains into a catch basin or other conveyance structure is a "directly connected impervious surface." As stormwater runoff flows across parking lots, roadways, and other paved areas, the oil, sediment, metals, and other pollutants are collected and concentrated. If this runoff is collected by a drainage structure and carried directly along impervious gutters or in sealed underground pipes, it has no opportunity for filtering by plant material or infiltration into the soil. It also increases in velocity and amount, causing increased peak-flows in the winter and decreased base-flows in the summer.

A basic site design principle for stormwater management is to minimize these directly connected impervious areas. This can be done by limiting overall impervious land coverage or by infiltrating and/or dispersing runoff from these impervious areas.

- **Maximize Permeability -** Within the development envelope, many opportunities are available to maximize the permeability of new construction. These include minimizing impervious areas, paving with permeable materials, clustering buildings, and reducing the land coverage of buildings by smaller footprints. All of these strategies make more land available for infiltration and dispersion through natural vegetation.

  Clustered driveways, small visitor parking bays and other strategies can also minimize the impact of transportation-related surfaces while still providing adequate access.

  Once site coverage is minimized through clustering and careful planning, pavement surfaces can be selected for permeability. A patio of brick-on-sand, for example, is more permeable than a large concrete slab. Engineered soil/landscape systems are permeable ground covers suitable for a wide variety of uses. Permeable/porous pavements can be used in place of traditional concrete or asphalt pavements in many low traffic applications.

  Maximizing permeability at every possible opportunity requires the integration of many small strategies. These strategies will be reflected at all levels of a project, from site planning to materials selection. In addition to the environmental and aesthetic benefits, a high-permeability site plan may allow the reduction or elimination of expensive runoff underground conveyance systems, flow control and treatment facilities, yielding significant savings in development costs.

- **Build Narrower Streets -** More than any other single element, street design has a powerful impact on stormwater quantity and quality. In residential development, streets and other transportation-related structures typically can comprise between 60 and 70 percent of the total impervious area, and, unlike rooftops, streets are almost always directly connected to the stormwater conveyance system.

  The combination of large, directly connected impervious areas, together with the pollutants generated by automobiles, makes the street network a principal contributor to stormwater pollution in residential areas.

  Street design is usually mandated by local municipal standards. These standards have been developed to facilitate efficient automobile traffic and maximize parking. Most require large impervious land coverage. In recent years, new street standards have been gaining acceptance that meet the access requirements of local residential streets while reducing

impervious land coverage. These standards generally create a new class of street that is narrower than the current local street standard, called an "access" street. An access street is intended only to provide access to a limited number of residences.

Because street design is the greatest factor in a residential development's impact on stormwater quality, it is important that designers, municipalities and developers employ street standards that reduce impervious land coverage.

- **Maximize Choices for Mobility -** Given the costs of automobile use, both in land area consumed and pollutants generated, maximizing choices for mobility is a basic principle for environmentally responsible site design. By designing residential developments to promote alternatives to automobile use, a primary source of stormwater pollution can be mitigated.

  Bicycle lanes and paths, secure bicycle parking at community centers and shops, direct, safe pedestrian connections, and transit facilities are all site-planning elements that maximize choices for mobility.

- **Use Drainage as a Design Element -** Unlike conveyance storm drain systems that hide water beneath the surface and work independently of surface topography, a drainage system for stormwater infiltration or dispersion can work with natural land forms and land uses to become a major design element of a site plan.

  By applying stormwater management techniques early in the site plan development, the drainage system can suggest pathway alignments, optimum locations for parks and play areas, and potential building sites. In this way, the drainage system helps to generate urban form, giving the development an integral, more aesthetically pleasing relationship to the natural features of the site. Not only does the integrated site plan complement the land, it can also save on development costs by minimizing earthwork and expensive drainage features.

Resource Material

Start at the Source. Residential Site Planning & Design Guidance Manual for Stormwater Quality Protection. Bay Area Stormwater Management Agencies Association. January 1997.

Site Planning for Urban Stream Protection. Center for Watershed Protection. December, 1995.

Better Site Design: A Handbook for Changing Development Rules in Your Community. Center for Watershed Protection. August 1998.

http://www.stormwatercenter.net

Chapter 6. - Pretreatment

6.1 Purpose

This chapter presents the methods that may be used to provide pretreatment prior to basic or enhanced runoff treatment facilities. Pretreatment must be provided in the following applications:

- For sand filters and infiltration BMPs to protect them from excessive siltation and debris.
- Where the basic treatment facility or the receiving water may be adversely affected by non-targeted pollutants (e.g., oil), or may by overwhelmed by a heavy load of targeted pollutants (e.g., suspended solids).

6.2 Application

Presettling basins are a typical pretreatment BMP used to remove suspended solids. All of the basic runoff treatment facilities may also be used for pretreatment to reduce suspended solids. Ecology has approved some emerging technologies for pretreatment through the TAPE process. See www.ecy.wa.gov/programs/wq/stormwater/newtech/Pretreatment.html for a list of approved pretreatment technologies.

You may also use a detention pond sized to meet the flow control standard in Volume I to provide pretreatment for suspended solids removal.

6.3 Best Management Practices (BMPs) for Pretreatment

This Chapter has only one BMP for presettling basins. Please use the Pretreatment link in Chapter 12 to access a listing and design criteria for various patented devices that have received a General Use Level Designation for Pretreatment through the TAPE program.

BMP T6.10: Presettling Basin

Purpose and Definition

A Presettling Basin provides pretreatment of runoff in order to remove suspended solids, which can impact other runoff treatment BMPs.

Application and Limitations

Runoff treated by a Presettling Basin may not be discharged directly to a receiving water; it must be further treated by a basic or enhanced runoff treatment BMP.

Design Criteria

1. A presettling basin shall be designed with a wetpool. The treatment volume shall be at least 30 percent of the total volume of runoff from the 6-month, 24-hour storm event.

2. A presettling basin shall be designed with a wetpool. The treatment volume shall be at least 30 percent of the total volume of runoff from the 6-month, 24-hour storm event.
3. If the runoff in the Presettling Basin will be in direct contact with the soil, it must be lined per the liner requirement in Section 4.4.
4. The Presettling Basin shall conform to the following:
   a) The length-to-width ratio shall be at least 3:1. Berms or baffles may be used to lengthen the flowpath.
   b) The minimum depth shall be 4 feet; the maximum depth shall be 6 feet.
5. Inlets and outlets shall be designed to minimize velocity and reduce turbulence. Inlet and outlet structures should be located at extreme ends of the basin in order to maximize particle-settling opportunities.

Site Constraints and Setbacks

Site constraints are any manmade restrictions such as property lines, easements, structures, etc. that impose constraints on development. Constraints may also be imposed from natural features such as requirements of the local government's Sensitive Areas Ordinance and Rules. These should also be reviewed for specific application to the proposed development.

All facilities shall be a minimum of 20 feet from any structure, property line, and any vegetative buffer required by the local government.

All facilities shall be 100 feet from any septic tank/drainfield (except wet vaults shall be a minimum of 20 feet).

All facilities shall be a minimum of 50 feet from any steep (greater than 15 percent) slope. A geotechnical report must address the potential impact of a wet pond on a steep slope.

Embankments that impound water must comply with the Washington State Dam Safety Regulations (Chapter 173-175 WAC). If the impoundment has a storage capacity (including both water and sediment storage volumes) greater than 10 acre-feet (435,600 cubic feet or 3.26 million gallons) above natural ground level, then dam safety design and review are required by the Department of Ecology. See Volume III for more detail.

Chapter 7. - Infiltration and Bioretention Treatment Facilities

7.1 Purpose

This Chapter provides site suitability, design, and maintenance criteria for infiltration treatment systems. Infiltration treatment Best Management Practices (BMPs) serve the dual purpose of removing pollutants (TSS, heavy metals, phosphates, and organics) and recharging aquifers.

A stormwater infiltration treatment facility is an impoundment; typically a basin, trench, or bioretention swale whose soil removes pollutants from stormwater.

Infiltration treatment soils must contain sufficient organic matter and/or clays to sorb, decompose, and/or filter stormwater pollutants. Pollutant/soil contact time, soil sorptive capacity, and soil aerobic conditions are important design considerations.

This chapter contains design details regarding BMP T7.30, Bioretention cells, swales and planter boxes, since the imported soil for that BMP serves primarily a treatment function. If the exfiltrate of stormwater from the imported soil is allowed to infiltrate into the ground, the facility also serves a flow control function.

7.2 General Considerations

These infiltration and bioretention treatment measures are capable of achieving the performance objectives cited in Chapter 3 for specific treatment menus. In general, these treatment techniques can capture and remove or reduce the target pollutants to levels that will not adversely affect public health or beneficial uses of surface and ground water resources, and will not cause a violation of ground water quality standards.

The terms bioretention and raingarden are sometimes used interchangeably. However, for Washington State, the term bioretention is used to describe an engineered facility that includes designed soil mixes and perhaps under-drains and control structures. The term, rain garden, is used to describe a landscape feature to capture stormwater on small project sites. Rain gardens have less restrictive design criteria for the soil mix and usually do not include under-drains and other control structures.

7.3 Applications

Infiltration treatment systems are typically installed:

- As off-line systems, or on-line for small drainages

- As a polishing treatment for street/highway runoff after pretreatment for TSS and oil
- As part of a treatment train
- As retrofits at sites with limited land areas, such as residential lots, commercial areas, parking lots, and open space areas.
- With appropriate pretreatment for oil and silt control to prevent clogging. Appropriate pretreatment devices include a pre-settling basin, wet pond/vault, constructed wetland, media filter, and oil/water separator.
- An infiltration basin is preferred over a trench for ease of maintenance reasons.
- Rain gardens are an On-site BMP option for projects that only have to comply with Minimum Requirements #1 through #5.
- Bioretention facilities are an On-site BMP option for: 1) projects that only have to comply with Minimum Requirements #1through #5, and 2) projects that trigger Minimum Requirements #1 through #9.
- Bioretention facilities and rain gardens are applications of the same LID concept and can be highly effective for reducing surface runoff and removing pollutants.

7.4 Best Management Practices (BMPs) for Infiltration and Bioretention Treatment

The three BMPs discussed below are recognized currently as effective treatment techniques using infiltration and bioretetention. Selection of a specific BMP should be coordinated with the Treatment Facility Menus provided in Chapter 3.

BMP T7.10: Infiltration Basins

The design criteria and design procedures for infiltration basins for treatment are in Chapter 3, section 3.3 of Volume III. Sub-sections 3.3.1 through 3.3.9 provide information pertinent to all infiltration facilities. Sub-section 3.3.10 provides information specific to infiltration basins.

BMP T7.20: Infiltration Trenches

The design criteria and design procedures for infiltration trenches for treatment are in Chapter 3, Section 3.3 of Volume III. Sub-sections 3.3.1 through 3.3.9 provide information pertinent to all infiltration facilities. Sub-section 3.3.11 provides information specific to infiltration trenches.

BMP T7.30: Bioretention Cells, Swales, and Planter Boxes

Purpose

To provide effective removal of many stormwater pollutants, and provide reductions in stormwater runoff quantity and surface runoff flow rates. Where the surrounding native soils have adequate infiltration rates, bioretention can help comply with flow control and treatment requirements. Where the native soils have low infiltration rates, under-drain systems can be installed and the facility used to filter pollutants and detain flows that exceed infiltration capacity of the surrounding soil. However, designs utilizing under-drains provide less flow control benefits.

Description

Bioretention areas are shallow landscaped depressions, with a designed soil mix and plants adapted to the local climate and soil moisture conditions, that receive stormwater from a contributing area.

The term, bioretention, is used to describe various designs using soil and plant complexes to manage stormwater. The following terminology is used in this manual:

- *Bioretention cells*: Shallow depressions with a designed planting soil mix and a variety of plant material, including trees, shrubs, grasses, and/or other herbaceous plants. Bioretention cells may or may not have an under-drain and are not designed as a conveyance system. (See Figure 7.4.1)
- *Bioretention swales*: Incorporate the same design features as bioretention cells; however, bioretention swales are designed as part of a system that can convey stormwater when maximum ponding depth is exceeded. Bioretention swales have relatively gentle side slopes and ponding depths that are typically 6 to 12 inches.

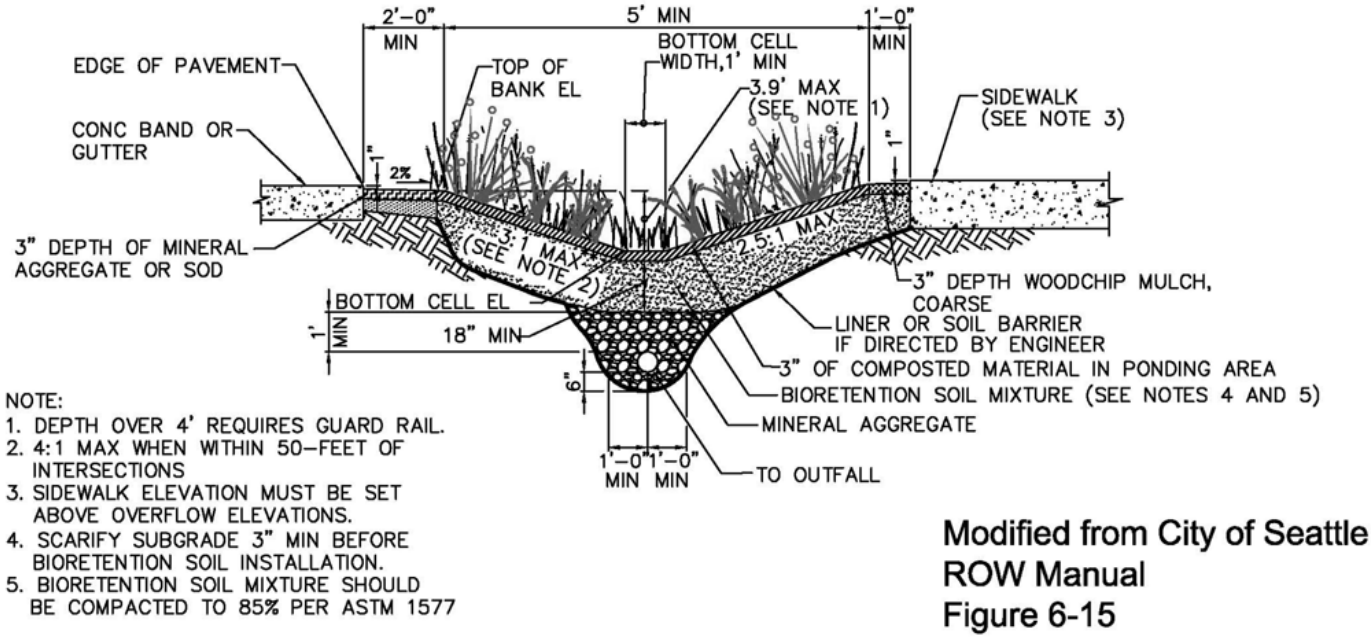

Figure 7.4.1 Example of a Bioretention Swale

- *Bioretention planters and planter boxes*: Designed soil mix and a variety of plant material including trees, shrubs, grasses, and/or other herbaceous plants within a vertical walled container usually constructed from formed concrete, but could include other materials. Planter boxes are completely impervious and include a bottom (must include an under-drain). Planters have an open bottom and allow infiltration to the subgrade. These designs are often used in ultra-urban settings. (See Figure 7.4.2)

  Note: Ecology has approved use of certain patented treatment systems that use specific, high rate media for treatment. Such systems are not considered LID BMPs and are not options for meeting the requirements of Minimum Requirement #5. The Ecology approval is meant to be used for Minimum Requirement #6, where appropriate.

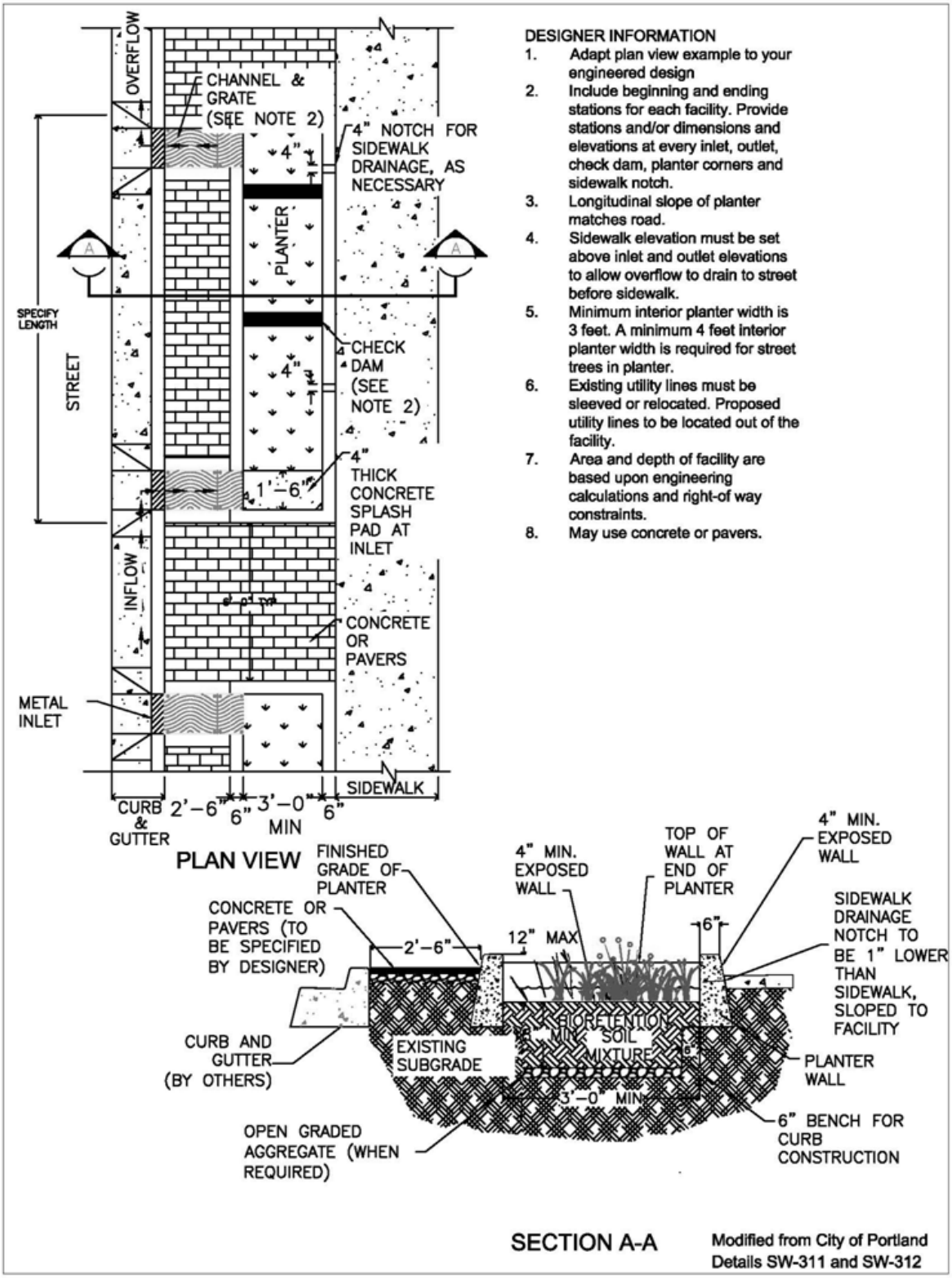

Figure 7.4.2 Example of a Bioretention Planter

Applications and Limitations

Because Bioretention facilities use an imported soil mix that has a moderate design infiltration rate, they are best applied for small drainages, and near the source of the stormwater. Cells may be scattered throughout a subdivision; a swale may run alongside the access road; or a series of planter boxes may serve the road. In these situations, they can but are not required to fully meet the requirement to treat 91% of the stormwater runoff file from pollution-generating surfaces. But the amount of stormwater that is predicted to pass through the soil profile may be estimated and subtracted from the 91% volume that must be treated. Downstream treatment facilities may be significantly smaller as a result.

Bioretention facilities that infiltrate into the ground can also serve a significant flow reduction function. They can, but are not required to fully meet the flow control duration standard of Minimum Requirement #7. Because they typically do not have an orifice restricting overflow or underflow discharge rates, they typically don't fully meet Minimum Requirement #7. However, their performance contributes to meeting the standard, and that can result in much smaller flow control facilities at the bottom of the project site. When used in combination with other low impact development techniques, and not underdrained, they can also help achieve compliance with the Performance Standard option of Minimum Requirement #5.

Bioretention constructed with imported compost materials should not be used within one-quarter mile of phosphorus-sensitive waterbodies if the underlying native soil does not meet the soil suitability criteria for treatment in Chapter 3 of Volume III. Preliminary monitoring indicates that new bioretention facilities can add phosphorus to stormwater. Therefore, they should also not be used with an underdrain when the underdrain water would be routed to a phosphorus-sensitive receiving water.

Applications with or without under-drains vary extensively and can be applied in new development, redevelopment and retrofits. Typical applications include:

- Individual lots for rooftop, driveway, and other on-lot impervious surface.
- Shared facilities located in common areas for individual lots.
- Areas within loop roads or cul-de-sacs.
- Landscaped parking lot islands.
- Within right-of-ways along roads (often linear bioretention swales and cells).

- Common landscaped areas in apartment complexes or other multifamily housing designs.
- Planters on building roofs, patios, and as part of streetscapes.

Infeasibility Criteria:

The following criteria describe conditions that make bioretention or rain gardens not required. If a project proponent wishes to use a bioretention or rain garden BMP though not required to because of these feasibility criteria, they may propose a functional design to the local government.

Note: Criteria with setback distances are as measured from the bottom edge of the bioretention soil mix.

Citation of any of the following infeasibility criteria must be based on an evaluation of site-specific conditions and a written recommendation from an appropriate licensed professional (e.g., engineer, geologist, hydrogeologist):

- Where professional geotechnical evaluation recommends infiltration not be used due to reasonable concerns about erosion, slope failure, or down gradient flooding.
- Within an area whose ground water drains into an erosion hazard, or landslide hazard area.
- Where the only area available for siting would threaten the safety or reliability of pre-existing underground utilities, pre-existing underground storage tanks, pre-existing structures, or pre-existing road or parking lot surfaces.
- Where the only area available for siting does not allow for a safe overflow pathway to the municipal separate storm sewer system or private storm sewer system.
- Where there is a lack of usable space for rain garden/bioretention facilities at re-development sites, or where there is insufficient space within the existing public right-of-way on public road projects.
- Where infiltrating water would threaten existing below grade basements.
- Where infiltrating water would threaten shoreline structures such as bulkheads.

The following criteria can be cited as reasons for a finding of infeasibility without further justification (though some require professional services):

- Within setbacks from structures as established by the local government with jurisdiction.
- Where they are not compatible with surrounding drainage system as determined by the local government with jurisdiction (e.g.,

project drains to an existing stormwater collection system whose elevation or location precludes connection to a properly functioning bioretention facility).

- Where land for bioretention is within area designated as an erosion hazard, or landslide hazard.
- Where the site cannot be reasonably designed to locate bioretention facilities on slopes less than 8%.
- Within 50 feet from the top of slopes that are greater than 20% and over 10 feet of vertical relief.
- For properties with known soil or ground water contamination (typically federal Superfund sites or state cleanup sites under the Model Toxics Control Act (MTCA)):
    - Within 100 feet of an area known to have deep soil contamination;
    - Where ground water modeling indicates infiltration will likely increase or change the direction of the migration of pollutants in the ground water;
    - Wherever surface soils have been found to be contaminated unless those soils are removed within 10 horizontal feet from the infiltration area;
    - Any area where these facilities are prohibited by an approved cleanup plan under the state Model Toxics Control Act or Federal Superfund Law, or an environmental covenant under Chapter 64.70 RCW.
- Within 100 feet of a closed or active landfill.
- Within 100 feet of a drinking water well, or a spring used for drinking water supply.
- Within 10 feet of small on-site sewage disposal drainfield, including reserve areas, and grey water reuse systems. For setbacks from a "large on-site sewage disposal system", see Chapter 246-272B WAC.
- Within 10 feet of an underground storage tank and connecting underground pipes when the capacity of the tank and pipe system is 1100 gallons or less. (As used in these criteria, an underground storage tank means any tank used to store petroleum products, chemicals, or liquid hazardous wastes of which 10% or more of the storage volume (including volume in the connecting piping system) is beneath the ground surface.
- Within 100 feet of an underground storage tank and connecting underground pipes when the capacity of the tank and pipe system is greater than 1100 gallons.

- Where the minimum vertical separation of 1 foot to the seasonal high water table, bedrock, or other impervious layer would not be achieved below bioretention or rain gardens that would serve a drainage area that is: 1) less than 5,000 sq. ft. of pollution-generating impervious surface, and 2) less than 10,000 sq. ft. of impervious surface; and, 3) less than ¾ acres of pervious surface.
- Where the a minimum vertical separation of 3 feet to the seasonal high water table, bedrock or other impervious layer would not be achieved below bioretention that: 1) would serve a drainage area that meets or exceeds: a) 5,000 square feet of pollution-generating impervious surface, or b) 10,000 square feet of impervious surface, or c) three-quarter (3/4) acres of pervious surfaces; and 2) cannot reasonably be broken down into amounts smaller than indicated in (1).
- Where the field testing indicates potential bioretention/rain garden sites have a measured (a.k.a., initial) native soil saturated hydraulic conductivity less than 0.30 inches per hour. If the measured native soil infiltration rate is less than 0.30 in/hour, this option should not be used to meet the requirements of MR#5. In these slow draining soils, a bioretention facility with an underdrain may be used to treat pollution- generating surfaces to help meet Minimum Requirement #6, Runoff Treatment. If the underdrain is elevated within a base course of gravel, the bioretention facility~~it~~ will also provide some modest flow reduction benefit that will help achieve Minimum Requirement #7.

A local government may designate geographic boundaries within which bioretention, or certain bioretention applications, may be designated as infeasible due to year-round, seasonal or periodic high groundwater conditions, or due to inadequate infiltration rates. Designations must be based upon a pre-ponderance of field data, collected within the area of concern, that indicate a high likelihood of failure to achieve the minimum groundwater clearance or infiltration rates identified in the above infeasibility criteria. The local government must develop a technical report and make it available upon request to the Dept. of Ecology. The report must be authored by (a) professional(s) with appropriate expertise (e.g., registered engineer, geologist, hydrogeologist, or certified soil scientist), and document the location and the pertinent values/observations of data that were used to recommend the designation and boundaries for the geographic area. The types of pertinent data include:

- Standing water heights or evidence of recent saturated conditions in observation wells, test pits, test holes, and well logs.
- Observations of areal extent and time of surface ponding
- Results of infiltration tests

Other Site Suitability Factors:

- Utility conflicts: Consult local jurisdiction requirements for horizontal and vertical separation required for publicly-owned utilities, such as water and sewer. Consult the appropriate franchise utility owners for separation requirements from their utilities, which may include communications and gas. When separation requirements cannot be met, designs should include appropriate mitigation measures, such as impermeable liners over the utility, sleeving utilities, fixing known leaky joints or cracked conduits, and/or adding an underdrain to the bioretention.
- Transportation safety: The design configuration and selected plant types should provide adequate sight distances, clear zones, and appropriate setbacks for roadway applications in accordance with local jurisdiction requirements.
- Ponding depth and surface water draw-down: Flow control needs, as well as location in the development, and mosquito breeding cycles will determine draw-down timing. For example, front yards and entrances to residential or commercial developments may require rapid surface dewatering for aesthetics.
- Impacts of surrounding activities: Human activity influences the location of the facility in the development. For example, locate bioretention areas away from traveled areas on individual lots to prevent soil compaction and damage to vegetation or provide elevated or bermed pathways in areas where foot traffic is inevitable. and provide barriers, such as wheel stops, to restrict vehicle access in roadside applications.
- Visual buffering: Bioretention facilities can be used to buffer structures from roads, enhance privacy among residences, and for an aesthetic site feature.
- Site growing characteristics and plant selection: Appropriate plants should be selected for sun exposure, soil moisture, and adjacent plant communities. Native species or hardy cultivars are recommended and can flourish in the properly designed and placed Bioretention Soil Mix with no nutrient or pesticide inputs and 2-3 years irrigation for establishment. Invasive species control may be necessary.

Field and Design Procedures

Geotechnical analysis is an important first step to develop an initial assessment of the variability of site soils, infiltration characteristics and the necessary frequency and depth of infiltration tests. See the Site Planning guidance in Chapter 3 of Volume 1.

See Section 3.4 in Volume III of this manual for more specific guidance regarding required field testing, assignment of infiltration rate correction factors, project submission requirements, and modeling.

Determining subgrade infiltration rates

Determining infiltration rates of the site soils is necessary to determine feasibility of designs that intend to infiltrate stormwater on-site. It is also necessary to estimate flow reduction benefits of such designs when using the Western Washington Hydrologic Model (WWHM) or MGS Flood.

The following provides recommended tests for the soils underlying bioretention areas. The test should be run at the anticipated elevation of the top of the native soil beneath the bioretention facility.

Method 1:

- Small bioretention cells (bioretention facilities receiving water from 1 or 2 individual lots or < 1/4 acre of pavement or other impervious surface): Small-Scale Pilot Infiltration Test (PIT). See Volume III, Section 3.3.6 for small-scale PIT method description. See Section 3.4 in Volume III for a discussion of the assignment of an appropriate infiltration correction factor.
- Large bioretention cells (bioretention facilities receiving water from several lots or 1/4 acre or more of pavement or other impervious surface): Multiple small or one large-scale PIT. If using the small-scale test, measurements should be taken at several locations within the area of interest. After completing the infiltration test, excavate the test site at least 3 feet if variable soil conditions or seasonal high water tables are suspected. Observe whether water is infiltrating vertically or only spreading horizontally because of ground water or a restrictive soil layer. See Section 3.4 in Volume III for a discussion of the assignment of an appropriate infiltration correction factor.
- Bioretention swales: approximately 1 small--scale PIT per 200 feet of swale, and within each length of road with significant differences in subsurface characteristics. However, if the site subsurface characterization, including soil borings across the development site, indicate consistent soil characteristics and depths to seasonal high ground water conditions, the number of test locations may be reduced to a frequency recommended by a geotechnical professional. See Section 3.4 in Volume III for a discussion of the assignment of an appropriate infiltration correction factor.

Method 2: Soil Grain Size Analysis Method:

This method is restricted to sites underlain with soils not consolidated by glacial advance (e.g., recessional outwash soils).

- Small bioretention cells: Use the grain size analysis method described in Section 3.3.6 of Volume III based on the layer(s) identified in results of one soil test pit or boring.
- Large bioretention cells: Use the grain size analysis method based on more than one soil test pit or boring. The more test pits/borings

used, and the more evidence of consistency in the soils, the less of a correction factor may be used.

- Bioretention swales: ~~Approxmately~~Approximately 1 soil test pit/boring per 200 feet of swale and within each length of road with significant differences in subsurface characteristics. However, if the site subsurface characterization, including soil borings across the development site, indicate consistent soil characteristics and depths to seasonal high ground water conditions, the number of test locations may be reduced to the minimum frequency indicated above.

Determining Bioretention soil mix infiltration rate:

Option 1: If using the Bioretention Soil Mix recommended herein, the WWHM assumes a default infiltration rate of ~~1.5~~6 inches per hour (15.24 cm/hr) ~~or 3 inches per hour may be used. 1.5 inches per hour is used where the drainage area to the bioretention device exceeds any of the following:~~

~~10,000 sq. ft. of impervious surface~~

~~5,000 sq. ft. of pollution-generating impervious surface~~

~~¾ acres of native vegetation converted to lawn/landscaping~~

~~2.5 acres of native vegetation converted to pasture.~~

~~Use 3 inches per hour if the drainage area does not exceed any of the above-listed areas.~~

Option 2: If creating a custom bioretention soil mix, Use ASTM D 2434 Standard Test Method for Permeability of granular Soils (Constant Head) with a compaction rate of 85 percent using ASTM D1557 Test Method for Laboratory Compaction Characteristics of Soil Using Modified Effort. See Appendix V-B for specific procedures for conducting ASTM D 2434. The WWHM user must enter the derived value into WWHM using "View/Edit Soil Types" pull down menu and adjusting the Ksat value.

After selecting option 1 or 2 above, determine the appropriate safety factor for the saturated hydraulic conductivity (Ksat). If the contributing area of the bioretention cell or swale is equal to or exceeds any of the following limitations:

5,000 square feet of pollution-generating impervious surface;

~~or~~ 10,000 square feet of impervious surface;

~~or~~ ¾ acre of lawn and landscape,

use 4~~0.25~~ as the infiltration rate (Ksat) safety~~correction~~ factor. If the contributing area is less than all of the above areas, use 2~~0.5~~ as the ~~infiltration correction~~ Ksat safety factor. The WWHM has a field for entering the appropriate safety factor.

Design Criteria for Bioretention

~~Note:~~ These design criteria are from the ~~*Low Impact Development*~~ *LID Technical Guidance Manual for* ~~*the*~~ *Puget Sound* ~~*Basin*~~ (2012). Refer to that document for additional explanations and background.

Note that the *LID Technical Guidance Manual for Puget Sound* (2012) is for additional information purposes only. You must follow the guidance within this manual if there are any discrepancies between this manual and the *LID Technical Guidance Manual for Puget Sound* (2012).

Flow entrance and presettling

Flow entrance design will depend on topography, flow velocities and volume entering the pretreatment and bioretention area, adjacent land use and site constraints. Flow velocities entering bioretention should be less than 1.0 ft/second to minimize erosion potential. Five primary types of flow entrances can be used for bioretention:

- *Dispersed, low velocity flow across a landscape area:* Landscape areas and vegetated buffer strips slow incoming flows and provide an initial settling of particulates and are the preferred method of delivering flows to the bioretention cell., Dispersed flow may not be possible given space limitations or if the facility is controlling roadway or parking lot flows where curbs are mandatory.
- *Dispersed or sheet flow across pavement or gravel and past wheel stops for parking areas.*
    - *Curb cuts for roadside, driveway or parking lot areas:* Curb cuts should include a rock pad, concrete or other erosion protection material in the channel entrance to dissipate energy. Minimum curb cut width should be 12 inches; however, 18 inches is recommended. Avoid the use of angular rock or quarry spalls and instead use round (river) rock if needed. Removing sediment from angular rock is difficult. Flow entrance should drop 2 to 3 inches from curb line ~~(see figure in the *Low Impact Development Technical Guidance Manual for the Puget Sound Basin*)~~ and provide an area for settling and periodic removal of sediment and coarse material before flow dissipates to the remainder of the cell.
    - Curb cuts used for bioretention areas in high use parking lots or roadways require increased level of maintenance due to high coarse particulates and trash accumulation in the flow entrance and associated bypass of flows. The following are methods recommended for areas where heavy trash and coarse particulates are anticipated:
        - Curb cut width: 18 inches.

    - At a minimum the flow entrance should drop 2 to 3 inches from gutter line into the bioretention area and provide an area for settling and periodic removal of debris.
    - Anticipate relatively more frequent inspection and maintenance for areas with large impervious areas, high traffic loads and larger debris loads.
    - Catch basins or forebays may be necessary at the flow entrance to adequately capture debris and sediment load from large contributing areas and high use areas. Piped flow entrance in this setting can easily clog and catch basins with regular maintenance are necessary to capture coarse and fine debris and sediment.

- *Pipe flow entrance:* Piped entrances should include rock or other erosion protection material in the channel entrance to dissipate energy and disperse flow.
- *Catch basin:* In some locations where road sanding or higher than usual sediment inputs are anticipated, catch basins can be used to settle sediment and release water to the bioretention area through a grate for filtering coarse material.
- *Trench drains:* can be used to cross sidewalks or driveways where a deeper pipe conveyance creates elevation problems. Trench drains tend to clog and may require additional maintenance.

Woody plants can restrict or concentrate flows and can be damaged by erosion around the root ball and should not be placed directly in the entrance flow path.

Bottom area and side slopes

Bioretention areas are highly adaptable and can fit various settings such as rural and urban roadsides, ultra urban streetscapes and parking lots by adjusting bottom area and side slope configuration. Recommended maximum and minimum dimensions include:

- Maximum planted side slope if total cell depth is greater than 3 feet: 3H:1V. If steeper side slopes are necessary rockeries, concrete walls or soil wraps may be effective design options. Local jurisdictions may require bike and/or pedestrian safety features, such as railings or curbs with curb cuts, when steep side slopes are adjacent to sidewalks, walkways, or bike lanes.
- Minimum bottom width for bioretention swales: 2 feet recommended and 1 foot minimum. Carefully consider flow depths and velocities, flow velocity control (check dams) and appropriate vegetation or rock mulch to prevent erosion and channelization at bottom widths less than 2 feet.

Bioretention areas should have a minimum shoulder of 12 inches (30.5 cm) between the road edge and beginning of the bioretention side slope where flush curbs are used. Compaction effort for the shoulder should 90 percent proctor.

Ponding area

Ponding depth recommendations:

- Maximum ponding depth: 12 inches (30.5 cm).
- Surface pool drawdown time: 24 hours

For design on projects subject to Minimum Requirement #5, and choosing to use List #1 or List #2 of that requirement, a bioretention facility shall have a horizontally projected surface area below the overflow which is at least 5% of the total impervious surface area draining to it. If lawn/landscape area will also be draining to the bioretention facility, Ecology recommends that the bioretention facility's horizontally projected surface area below the overflow be increased by 2% of the lawn/landscape area.

The ponding area provides surface storage for storm flows, particulate settling, and the first stages of pollutant treatment within the cell. Pool depth and draw-down rate are recommended to provide surface storage, adequate infiltration capability, and soil moisture conditions that allow for a range of appropriate plant species. Soils must be allowed to dry out periodically in order to: restore hydraulic capacity to receive flows from subsequent storms; maintain infiltration rates; maintain adequate soil oxygen levels for healthy soil biota and vegetation; provide proper soil conditions for biodegradation and retention of pollutants. Maximum designed depth of ponding (before surface overflow to a pipe or ditch) must be considered in light of drawdown time.

For bioretention areas with under-drains, elevating the drain to create a temporary saturated zone beneath the drain is advised to promote denitrification (conversion of nitrate to nitrogen gas) and prolong moist soil conditions for plant survival during dry periods (see Under-drain section below for details).

Surface overflow

Surface overflow can be provided by vertical stand pipes that are connected to under-drain systems, by horizontal drainage pipes or armored overflow channels installed at the designed maximum ponding elevations. Overflow can also be provided by a curb cut at the down-gradient end of the bioretention area to direct overflows back to the street. Overflow conveyance structures are necessary for all bioretention facilities to safely convey flows that exceed the capacity of the facility and to protect downstream natural resources and property.

The minimum freeboard from the invert of the overflow stand pipe, horizontal drainage pipe or earthen channel should be 6 inches unless otherwise specified by the local jurisdiction's design standards.

Default Bioretention Soil Media (BSM)

Projects which use the following requirements for the bioretention soil media do not have to test the media for it saturated hydraulic conductivity (aka. Infiltration rate). They may assume the rates specified in the subsection titled "Determining Bioretention Soil Mix Infiltration Rate."

Mineral Aggregate

Percent Fines: A range of 2 to 4 percent passing the #200 sieve is ideal and fines should not be above 5 percent for a proper functioning specification according to ASTM D422.

Aggregate Gradation

The aggregate portion of the BSM should be well-graded. According to ASTM D 2487-98 (Classification of Soils for Engineering Purposes (Unified Soil Classification System)), well-graded sand should have the following gradation coefficients:

- Coefficient of Uniformity ($C_u = D_{60}/D_{10}$) equal to or greater than 4, and
- Coefficient of Curve ($C_c = (D_{30})^2/D_{60} \times D_{10}$) greater than or equal to 1 and less than or equal to 3.

Table 7.4.1 provides a gradation guideline for the aggregate component of a Bioretention Soil Mix specification in western Washington (Hinman, Robertson, 2007). The sand gradation below is often supplied as a well-graded utility or screened. With compost this blend provides enough fines for adequate water retention, hydraulic conductivity within recommended range (see below), pollutant removal capability, and plant growth characteristics for meeting design guidelines and objectives.

Table 7.4.1
General Guideline for Mineral Aggregate Gradation

Sieve Size	Percent Passing
3/8"	100
#4	95-100
#10	75-90
#40	25-40
#100	4-10
#200	2-5

Where existing soils meet the above aggregate gradation, those soils may be amended rather than importing mineral aggregate.

Compost to Aggregate Ratio, Organic Matter Content, Cation Exchange Capacity

- Compost to aggregate ratio: 60-65 percent mineral aggregate, 35 – 40 percent compost by volume.
- Organic matter content: 5 – 8 percent by weight.
- Cation Exchange Capacity (CEC) must be ≥ 5 milliequivalents/100 g dry soil Note: Soil mixes meeting the above specifications do not have to be tested for CEC. They will readily meet the minimum CEC.

Compost

To ensure that the BSM will support healthy plant growth and root development, contribute to biofiltration of pollutants, and not restrict infiltration when used in the proportions cited herein, the following compost standards are required.

- Meets the definition of "composted material~~s~~" in WAC 173-350-~~22~~100 and complies with testing parameters ~~(including contaminant levels~~ and other standards in WAC 173-350-220.~~), available online at~~
- Produced at a composting facility that is permitted by the ~~WA Department of Ecology~~jurisdictional health authority. ~~A current list of P~~permitted compost facilities in Washington are included on a list ~~is~~ available at http://www.ecy.wa.gov/programs/swfa/~~compost~~organics/soil.html
- The compost product must originate a minimum of 65 percent by volume from recycled plant waste comprised of ~~as defined in WAC 173-350-100~~ as ~~"Type I Feedstocks~~"yard debris," "crop residues," and "bulking agents~~.~~" as those terms are defined in WAC 173-350-100. A maximum of 35 percent by volume of "post-consumer food waste" ~~other approved organic waste~~ as defined in WAC 173-350-100 ~~as "Type III", including postconsumer food waste~~, but not including biosolids, may be substituted for recycled plant waste. ~~Type II and IV feedstocks shall not be used for the compost going into bioretention facilities or rain gardens.~~
- Stable (low oxygen use and CO_2 generation) and mature (capable of supporting plant growth) by tests shown below. This is critical to plant success in a bioretention soil mixes.
- Moisture content range: no visible free water or dust produced when handling the material.
- Tested in accordance with the U.S. Composting Council "Testing Methods for the Examination of Compost and Composting" (TMECC), as established in the Composting Council's "Seal of Testing Assurance" (STA) program. Most Washington compost facilities now use these tests.

- Screened to the following size gradations for Fine Compost ~~under~~when tested in accordance with TMECC test method 02.02-B, Sample Sieving for Aggregate Size Classification."

  Fine Compost shall meet the following gradation by dry weight

  Minimum percent passing 2" 100%

  Minimum percent passing 1" 99%

  Minimum percent passing 5/8" 90%

  Minimum percent passing ¼" 75%

- ~~(gradations are shown in the specification in an appendix of the ***Low Impact Development Technical Guidance Manual for Puget Sound***)~~ .
- pH between 6.0 and 8.5 (TMECC 04.11-A). If the pH falls outside of the acceptable range, it may be modified with lime to increase the pH or iron sulfate plus sulfur to lower the pH. The lime or iron sulfate must be mixed uniformly into the soil prior to use in the bioretention area.
- "Physical contaminants" (as defined in WAC 173-350-100) ~~Manufactured inert~~ content less that 1% by weight (TMECC 03.08-A) total, not to exceed 0.25 percent film plastic by dry weight.
- Minimum organic matter content of 40% (TMECC 05.07-A)
- Soluble salt content less than 4.0 mmhos/cm (TMECC 04.10-A)
- Maturity greater than 80% (TMECC 05.05-A "Germination and Vigor")
- Stability of 7 or below (TMECC 05.08-B "Carbon Dioxide Evolution Rate")
- Carbon to nitrogen ratio (TMECC 04.01 "Total Carbon" and 04.02D "Total Kjeldahl Nitrogen") of less than 25:1. The C:N ratio may be up to 35:1 for plantings composed entirely of Puget Sound Lowland native species and up to 40:1 for coarse compost to be used as a surface mulch (not in a soil mix).

Design Criteria for Custom Bioretention Soil Mixes

Projects which prefer to create a custom Bioretention Soil Mix rather than using the default requirements above must demonstrate compliance with the following criteria using the specified test method:

- CEC ≥ 5 meq/100 grams of dry soil; USEPA 9081
- pH between 5.5 and 7.0

- 5 - 8 percent organic matter content before and after the saturated hydraulic conductivity test; ASTM D2974(Standard Test Method for Moisture, Ash, and Organic Matter of Peat and Other Organic Soils)
- 2-5 percent fines passing the 200 sieve; TMECC 04.11-A
- Measured (Initial) saturated hydraulic conductivity of less than 12 inches per hour; ASTM D 2434 (Standard Test Method for Permeability of Granular Soils (Constant Head)) at 85% compaction per ASTM D 1557 (Standard Test Method s for Laboratory Compaction Characteristics of Soil Using Modified Effort). Also, use Appendix V-B, Recommended Procedures for ASTM D 2434 When Measuring Hydraulic Conductivity for Bioretention Soil Mixes.
- Design (long-term) saturated hydraulic conductivity of more than 1 inch per hour. Note: Design saturated hydraulic conductivity is determined by applying the appropriate infiltration correction factors as explained above under "Determining Bioretention soil mix infiltration rate."
- If compost is used in creating the custom mix, it must meet all of the specifications listed above for compost.

Soil Depth:

- Soil depth must be a minimum of 18 inches to provide water quality treatment and good growing conditions for selected plants
- ~~A minimum depth of 24 inches should be selected for improved phosphorus and nitrogen (TKN) removal where under-drains are used.~~

Filter Fabrics:

Do not use filter fabrics between the subgrade and the Bioretention Soil Mix. The gradation between existing soils and Bioretention Soil Mix is not great enough to allow significant migration of fines into the Bioretention Soil Mix. Additionally, filter fabrics may clog with downward migration of fines from the Bioretention Soil Mix.

Underdrain (optional):

Note that if an underdrain is used in a bioretention facility design, the bioretention facility is no longer considered an LID BMP and cannot be used to satisfy Minimum Requirement #5. However, a bioretention facility with an underdrain may still be used to satisfy Minimum Requirement #6 (Runoff Treatment). If the underdrain is elevated within a base course of gravel, the bioretention facility will also provide some modest flow reduction benefit that will help achieve Minimum Requirement #7 (Flow Control).

The area above an under-drain pipe in a bioretention area provides detention and pollutant filtering; however, only the area below the under-drain invert and above the bottom of the bioretention facility (subgrade)

can be used in the WWHM or MGSFlood for dead storage volume that provides flow control benefit.

When using an underdrained bioretention facility, the model must be run twice. Once to determine its treatment capacity, and once to determine its flow control benefits.

- For treatment capacity, when using the default bioretention soil media, the modeled infiltration rate shall be either 1.5 or 3 in/hr, depending on the drainage area. See the "Determining Bioretention soil mix infiltration rate" section above.
- For determining project compliance with Minimum Requirement #7, and/or the LID performance standard option of Minimum Requirement #5, the modeled infiltration rate shall be 6 in/hr when using the default bioretention soil media.

Under-drain systems should only be installed when the bioretention facility is:

- Located near sensitive infrastructure (e.g., unsealed basements) and potential for flooding is likely.
- Used for filtering storm flows from gas stations or other pollutant hotspots (requires impermeable liner).
- Located above native soils with infiltration rates that are not adequate to meet maximum pool and system dewater rates, or are below a minimum rate allowed by the local government.
- In an area that does not provide the minimum depth to a hydraulic restriction layer, e.g., high seasonal ground water.

The under-drain can be connected to a downstream open conveyance (bioretention swale), to another bioretention cell as part of a connected treatment system, daylight to a dispersion area using an effective flow dispersion practice, or to a storm drain.

Under-drain pipe:

Under-drains shall be slotted, thick-walled plastic pipe. The slot opening should be smaller than the smallest aggregate gradation for the gravel filter bed (see under-drain filter bed below) to prevent migration of material into the drain. This configuration allows for pressurized water cleaning and root cutting if necessary.

Under-drain pipe recommendations:

- Minimum pipe diameter: 4 inches (pipe diameter will depend on hydraulic capacity required, 4 to 8 inches is common).
- Slotted subsurface drain PVC per ASTM D1785 SCH 40.
- Slots should be cut perpendicular to the long axis of the pipe and be 0.04 to 0.069 inches by 1 inch long and be spaced 0.25 inches apart

(spaced longitudinally). Slots should be arranged in four rows spaced on 45-degree centers and cover ½ of the circumference of the pipe. See Filter Materials section for aggregate gradation appropriate for this slot size.

- Under-drains should be sloped at a minimum of 0.5 percent unless otherwise specified by an engineer.

Perforated PVC or flexible slotted HDPE pipe cannot be cleaned with pressurized water or root cutting equipment, are less durable and are not recommended. Wrapping the under-drain pipe in filter fabric increases chances of clogging and is not recommended. A 6-inch rigid non-perforated observation pipe or other maintenance access should be connected to the under-drain every 250 to 300 feet to provide a clean-out port, as well as an observation well to monitor dewatering rates.

Under-drain aggregate filter and bedding layer.

Aggregate filter and bedding layers buffer the under-drain system from sediment input and clogging. When properly selected for the soil gradation, geosynthetic filter fabrics can provide adequate protection from the migration of fines. However, aggregate filter and bedding layers, with proper gradations, provide a larger surface area for protecting under-drains and are preferred.

- Guideline for under-drain aggregate filter and bedding layers with heavy walled slotted pipe (see under-drain pipe guideline above):

Sieve size	**Percent Passing**
¾ inch	100
¼ inch	30-60
US No. 8	20-50
US No. 50	3-12
US No. 200	0-1

The above gradation is a Type 26 mineral aggregate (gravel backfill for drains, City of Seattle).

- Place under-drain on a bed of the Type 26 aggregate with a minimum thickness of 6 inches and cover with Type 26 aggregate to provide a 1-foot minimum depth around the top and sides of the slotted pipe. See the ~~*Low Impact Development*~~*LID Technical Guidance Manual for Puget Sound* (2012) -for a related figure.

  - Note that the *LID Technical Guidance Manual for Puget Sound* (2012) is for additional informational purposes only. You must follow the guidance within this manual if there are any discrepancies between this manual and the *LID Technical Guidance Manual for Puget Sound* (2012).

Orifice and other flow control structures:

- The minimum orifice diameter should be 0.5 inches to minimize clogging and maintenance requirements.

Check dams and weirs

Check dams are necessary for reducing flow velocity and potential erosion, as well as increasing detention time and infiltration capability on sloped sites. Typical materials include concrete, wood, rock, compacted dense soil covered with vegetation, and vegetated hedge rows. Design depends on flow control goals, local regulations for structures within road right-of-ways and aesthetics. Optimum spacing is determined by flow control benefit (modeling) in relation to cost consideration. See ~~the~~ the *LID Technical Guidance Manual for Puget Sound* (2012) ~~*Low Impact Development Technical Guidance Manual for Puget Sound*~~ for displays of typical designs.

Note that the *LID Technical Guidance Manual for Puget Sound* (2012) is for additional informational purposes only. You must follow the guidance within this manual if there are any discrepancies between this manual and the *LID Technical Guidance Manual for Puget Sound* (2012).

UIC discharge

Stormwater that has passed through the bioretention soil mix may also discharge to a gravel-filled dug or drilled drain. Underground Injection Control (UIC) regulations are applicable and must be followed (Chapter 173-218 WAC).

Hydraulic restriction layers:

Adjacent roads, foundations or other infrastructure may require that infiltration pathways are restricted to prevent excessive hydrologic loading. Two types of restricting layers can be incorporated into bioretention designs:

- Clay (bentonite) liners are low permeability liners. Where clay liners are used under-drain systems are necessary. See Volume V section 4.4.3 for guidelines.
- Geomembrane liners completely block infiltration to subgrade soils and are used for ground water protection when bioretention facilities are installed to filter storm flows from pollutant hotspots or on sidewalls of bioretention areas to restrict lateral flows to roadbeds or other sensitive infrastructure. Where geomembrane liners are used to line the entire facility under-drain systems are necessary. The liner should have a minimum thickness of 30 mils and be ultraviolet (UV) resistant.

Plant materials

In general, the predominant plant material utilized in bioretention areas are facultative species adapted to stresses associated with wet and dry conditions. Soil moisture conditions will vary within the facility from saturated (bottom of cell) to relatively dry (rim of cell). Accordingly, wetland plants may be used in the lower areas, if saturated soil conditions exist for appropriate periods, and drought-tolerant species planted on the perimeter of the facility or on mounded areas. See ~~Low Impact Development Technical Guidance Manual for the Puget Sound Basin~~the *LID Technical Guidance Manual for Puget Sound* (2012) -for additional guidance and recommended plant species.

Note that the *LID Technical Guidance Manual for Puget Sound* (2012) is for additional informational purposes only. You must follow the guidance within this manual if there are any discrepancies between this manual and the *LID Technical Guidance Manual for Puget Sound* (2012).

Mulch layer

You can design Bioretention areas with or without a mulch layer. When used, mulch shall be:

- Coarse compost in the bottom of the facilities (compost is less likely to float during cell inundation).
- Shredded or chipped hardwood or softwood on side slopes above ponding elevation and rim area. Arborist mulch is mostly woody trimmings from trees and shrubs and is a good source of mulch material. Wood chip operations are a good source for mulch material that has more control of size distribution and consistency. Do not use shredded construction wood debris or any shredded wood to which preservatives have been added.
- Free of weed seeds, soil, roots and other material that is not **bole** or branch wood and bark.
- A maximum of 2 to 3 inches thick.

Mulch shall **not** be:

- Grass clippings (decomposing grass clippings are a source of nitrogen and are not recommended for mulch in bioretention areas).
- Pure bark (bark is essentially sterile and inhibits plant establishment).

In bioretention areas where higher flow velocities are anticipated an aggregate mulch may be used to dissipate flow energy and protect underlying Bioretention Soil Mix. Aggregate mulch varies in size and type, but 1 to 1 1/2 inch gravel (rounded) decorative rock is typical.

Installation

Excavation

Soil compaction can lead to facility failure; accordingly, minimizing compaction of the base and sidewalls of the bioretention area is critical. Excavation should never be allowed during wet or saturated conditions (compaction can reach depths of 2-3 feet during wet conditions and mitigation is likely not be possible). Excavation should be performed by machinery operating adjacent to the bioretention facility and no heavy equipment with narrow tracks, narrow tires, or large lugged, high pressure tires should be allowed on the bottom of the bioretention facility. If machinery must operate in the bioretention cell for excavation, use light weight, low ground-contact pressure equipment and rip the base at completion to refracture soil to a minimum of 12 inches. If machinery operates in the facility, subgrade infiltration rates must be field tested and compared to design rates. Failure to meet or exceed the design infiltration rate will require revised engineering designs to verify achievement of treatment and flow control benefits that were estimated in the Stormwater Site Plan.

Prior to placement of the BSM, the finished subgrade shall:

- Be scarified to a minimum depth of 3 inches.
- Have any sediment deposited from construction runoff removed. To remove all introduced sediment, subgrade soil should be removed to a depth of 3-6 inches and replaced with BSM.
- Be inspected by the responsible engineer to verify required subgrade condition.

Sidewalls of the facility, beneath the surface of the BSM, can be vertical if soil stability is adequate. Exposed sidewalls of the completed bioretention area with BSM in place should be no steeper than 3H:1V. The bottom of the facility should be flat.

Soil Placement

On-site soil mixing or placement shall not be performed if Bioretention Soil Mix or subgrade soil is saturated. The bioretention soil mixture should be placed and graded by machinery operating adjacent to the bioretention facility. If machinery must operate in the bioretention cell for soil placement, use light weight equipment with low ground-contact pressure. If machinery operates in the facility, subgrade infiltration rates must be field tested and compared to design rates. Failure to meet or exceed the design infiltration rate will require revised engineering designs to verify achievement of treatment and flow control benefits that were estimated in the Stormwater Site Plan.

The soil mixture shall be placed in horizontal layers not to exceed 12 inches per lift for the entire area of the bioretention facility.

Compact the Bioretention Soil Mix to a relative compaction of 85 percent of modified maximum dry density (ASTM D 1557). Compaction can be achieved by boot packing (simply walking over all areas of each lift), and

then apply 0.2 inches (0.5 cm) of water per 1 inch (2.5 cm) of Bioretention Soil Mix depth. Water for settling should be applied by spraying or sprinkling.

Temporary Erosion and Sediment Control (TESC)

Controlling erosion and sediment are most difficult during clearing, grading, and construction; accordingly, minimizing site disturbance to the greatest extent practicable is the most effective sediment management. During construction:

- Bioretention facilities should not be used as sediment control facilities and all drainage should be directed away from bioretention facilities after initial rough grading. Flow can be directed away from the facility with temporary diversion swales or other approved protection. If introduction of construction runoff cannot be avoided see below for guidelines.
- Construction on Bioretention facilities should not begin until all contributing drainage areas are stabilized according to erosion and sediment control BMPs and to the satisfaction of the engineer.
- If the design includes curb and gutter, the curb cuts and inlets should be blocked until Bioretention Soil Mix and mulch have been placed and planting completed (when possible), and dispersion pads are in place.

Every effort during design, construction sequencing and construction should be made to prevent sediment from entering bioretention facilities. However, bioretention areas are often distributed throughout the project area and can present unique challenges during construction. See the ~~*Low Impact Technical Guidance Manual for the Puget Sound Basin*~~*LID Technical Guidance Manual for Puget Sound* (2012) for guidelines if no other options exist and runoff during construction must be directed through the bioretention facilities.

Note that the *LID Technical Guidance Manual for Puget Sound* (2012) is for additional informational purposes only. You must follow the guidance within this manual if there are any discrepancies between this manual and the *LID Technical Guidance Manual for Puget Sound* (2012).

Erosion and sediment control practices must be inspected and maintained on a regular basis.

Verification

If using the default bioretention soil media, pre-placement laboratory analysis for saturated hydraulic conductivity of the bioretention soil media is not required. Verification of the mineral aggregate gradation, compliance with the compost specifications, and the mix ratio must be provided.

If using a custom bioretention soil media, verification of compliance with the minimum design criteria cited above for such custom mixes must be provided. This will require laboratory testing of the material that will be used in the installation. Testing shall be performed by a Seal of Testing Assurance, AASHTO, ASTM or other standards organization accredited laboratory with current and maintained certification. Samples for testing

must be supplied from the BSM that will be placed in the bioretention areas.

If testing infiltration rates is necessary for post-construction verification use the Pilot Infiltration Test (PIT) method or a double ring infiltrometer test (or other small-scale testing allowed by the local government with jurisdiction). If using the PIT method, do not excavate Bioretention Soil Mix (conduct test at level of finished Bioretention Soil Mix elevation), use a maximum of 6 inch ponding depth and conduct test before plants are installed.

Maintenance

Bioretention areas require annual plant, soil, and mulch layer maintenance to ensure optimum infiltration, storage, and pollutant removal capabilities. In general, bioretention maintenance requirements are typical landscape care procedures and include:

- Watering: Plants should be selected to be drought tolerant and not require watering after establishment (2 to 3 years). Watering may be required during prolonged dry periods after plants are established.
- Erosion control: Inspect flow entrances, ponding area, and surface overflow areas periodically, and replace soil, plant material, and/or mulch layer in areas if erosion has occurred. Properly designed facilities with appropriate flow velocities should not have erosion problems except perhaps in extreme events. If erosion problems occur the following should be reassessed: (1) flow volumes from contributing areas and bioretention cell sizing; (2) flow velocities and gradients within the cell; and (3) flow dissipation and erosion protection strategies in the pretreatment area and flow entrance. If sediment is deposited in the bioretention area, immediately determine the source within the contributing area, stabilize, and remove excess surface deposits.
- Sediment removal*:* Follow the maintenance plan schedule for visual inspection and remove sediment if the volume of the ponding area has been compromised.
- Plant material: Depending on aesthetic requirements, occasional pruning and removing dead plant material may be necessary. Replace all dead plants and if specific plants have a high mortality rate, assess the cause and replace with appropriate species. Periodic weeding is necessary until plants are established.
- Weeding: Invasive or nuisance plants should be removed regularly and not allowed to accumulate and exclude planted species. At a minimum, schedule weeding with inspections to coincide with important horticultural cycles (e.g., prior to major weed varieties dispersing seeds). Weeding should be done manually and without herbicide applications. The weeding schedule should become less frequent if the appropriate plant species and planting density are used and the selected plants grow to capture the site and exclude undesirable weeds.

- Nutrient and pesticides*:* The soil mix and plants are selected for optimum fertility, plant establishment, and growth. Nutrient and pesticide inputs should not be required and may degrade the pollutant processing capability of the bioretention area, as well as contribute pollutant loads to receiving waters. By design, bioretention facilities are located in areas where phosphorous and nitrogen levels may be elevated and these should not be limiting nutrients. If in question, have soil analyzed for fertility.
- Mulch: Replace mulch annually in bioretention facilities where heavy metal deposition is high (e.g., contributing areas that include gas stations, ports and roads with high traffic loads). In residential settings or other areas where metals or other pollutant loads are not anticipated to be high, replace or add mulch as needed (likely 3 to 5 years) to maintain a 2 to 3 inch depth.

  Soil*:* Soil mixes for bioretention facilities are designed to maintain long-term fertility and pollutant processing capability. Estimates from metal attenuation research suggest that metal accumulation should not present an environmental concern for at least 20 years in bioretention systems, but this will vary according to pollutant load. Replacing mulch media in bioretention facilities where heavy metal deposition is likely provides an additional level of protection for prolonged performance. If in question, have soil analyzed for fertility and pollutant levels.

BMP T7.40: Compost-amended Vegetated Filter Strips (CAVFS)

Description

The CAVFS is a variation of the basic vegetated filter strip that adds soil amendments to the roadside embankment (See Figure 7.4.3). The soil amendments improve infiltration characteristics, increase surface roughness, and improve plant sustainability. Once permanent vegetation is established, the advantages of the CAVFS *a*re higher surface roughness; greater retention and infiltration capacity; improved removal of soluble cationic contaminants through sorption; improved overall vegetative health; and a reduction of invasive weeds. Compost-amended systems have somewhat higher construction costs due to more expensive materials, but require less land area for runoff treatment, which can reduce overall costs.

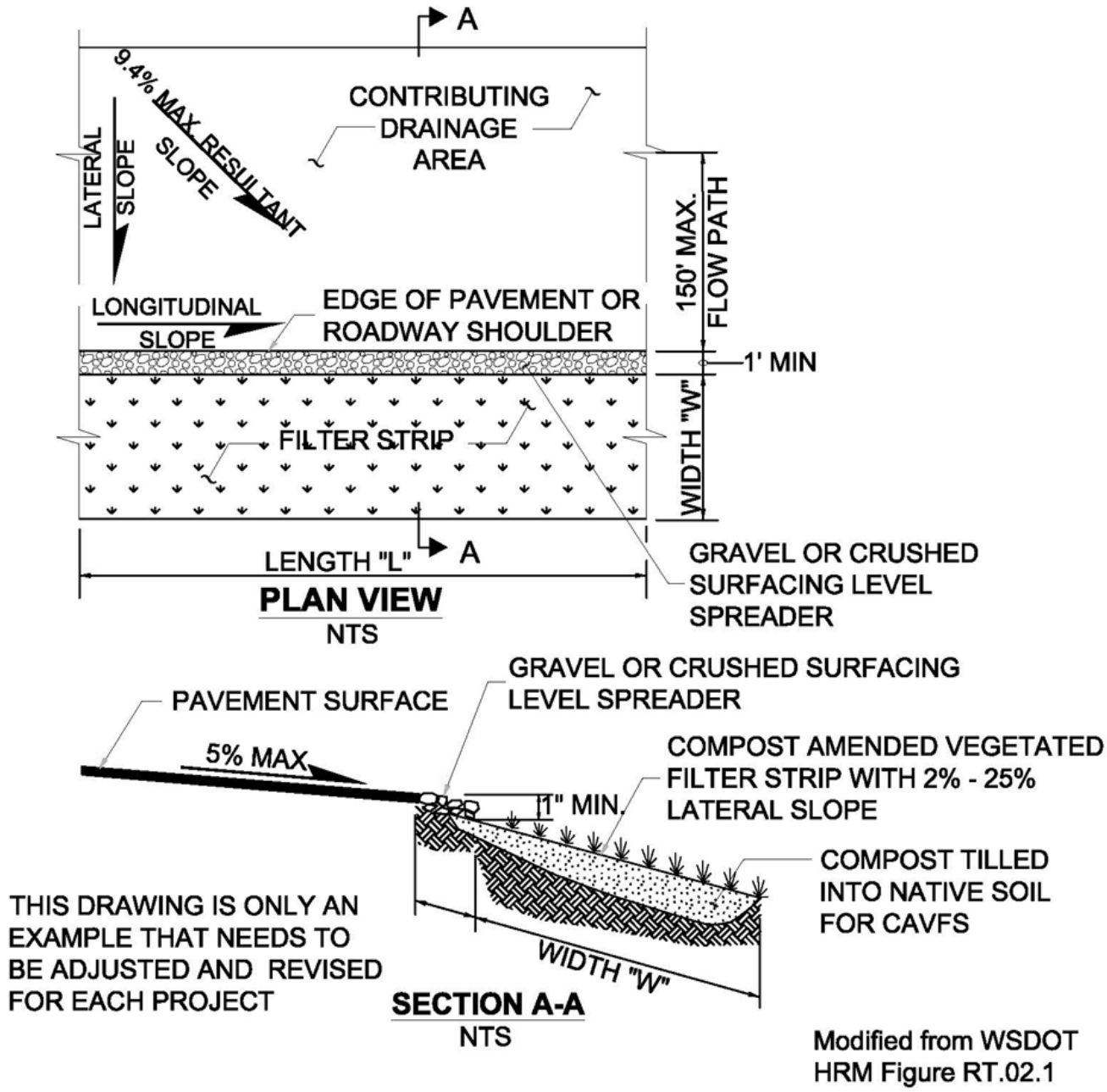

Figure 7.4.3 – Example of a Compost Amended Vegetated Filter Strip (CAVFS)

Applications

CAVFS can be used to meet basic runoff treatment and enhanced runoff treatment objectives. It has practical application in areas where there is space for roadside embankments that can be built to the CAVFS specifications.

Soil Design Criteria

The CAVFS design incorporates composted material into the native soils per the criteria in BMP T5.13 for turf areas. However, as noted below, the compost shall not contain biosolids, or manure. The goal is to create a healthy soil environment for a lush growth of turf.

Soil/Compost Mix:

- Presumptive approach: Place and rototill 1.75 inches of composted material into 6.25 inches of soil (a total amended depth of about 9.5 inches), for a settled depth of 8 inches. Water or roll to compact soil to 85% maximum. Plant grass.
- Custom approach: Place and rototill the calculated amount of composted material into a depth of soil needed to achieve 8 inches of settled soil at 5% organic content. Water or roll to compact soil to 85% maximum. Plant grass. The amount of compost or other soil amendments used varies by soil type and organic matter content. If there is a good possibility that site conditions may already contain a relatively high organic content, then it may be possible to modify the pre-approved rate described above and still be able to achieve the 5% organic content target.
- The final soil mix (including compost and soil) should have an initial saturated hydraulic conductivity less than 12 inches per hour, and a minimum long-term hydraulic conductivity of 1.0 inch/hour per ASTM Designation D 2434 (Standard Test Method for Permeability of Granular Soils) at 85% compaction per ASTM Designation D 1557 (Standard Test Method for Laboratory Compaction Characteristics of Soil Using Modified Effort. Infiltration rate and hydraulic conductivity are assumed to be approximately the same in a uniform mix soil. Note: Long term saturated hydraulic conductivity is determined by applying the appropriate infiltration correction factors as explained under "Determining Bioretention soil mix infiltration rate" under BMP T7.30.
- The final soil mixture should have a minimum organic content of 5% by dry weight per ASTM Designation D 2974 (Standard Test Method for Moisture, Ash and Organic Matter of Peat and Other Organic Soils) (Tackett, 2004).
- Achieving the above recommendations will depend on the specific soil and compost characteristics. In general, the recommendation can be achieved with 60% to 65% loamy sand mixed with 25% to 30% compost or 30% sandy loam, 30% coarse sand, and 30% compost.
- The final soil mixture should be tested prior to installation for fertility, micronutrient analysis, and organic material content.
- Clay content for the final soil mix should be less than 5%.
- Compost must not contain biosolids,manure, any street or highway sweepings, or any catch basin solids.

- The pH for the soil mix should be between 5.5 and 7.0 (Stenn, 2003). If the pH falls outside the acceptable range, it may be modified with lime to increase the pH or iron sulfate plus sulfur to lower the pH. The lime or iron sulfate must be mixed uniformly into the soil prior to use in LID areas (Low-Impact Development Center, 2004).
- The soil mix should be uniform and free of stones, stumps, roots, or other similar material larger than 2 inches.
- When placing topsoil, it is important that the first lift of topsoil is mixed into the top of the existing soil. This allows the roots to penetrate the underlying soil easier and helps prevent the formation of a slip plane between the two soil layers.

Soil Component:

The texture for the soil component of the LID BMP soil mix should be loamy sand (USDA Soil Textural Classification).

Compost Component:

Follow the specifications for compost in BMP T7.30 – Bioretention

Design Modeling Method

The CAVFS will have an "Element" in the approved continuous runoff models that must be used for determining the amount of water that is treated by the CAVFS. To fully meet treatment requirements, Ninety-one percent of the influent runoff file must pass through the soil profile of the CAVFS. Water that merely flows over the surface is not considered treated. Approved continuous runoff models should be able to report the amount of water that it estimates will pass through the soil profile.

Maintenance

Compost, as with sand filters or other filter mediums, can become plugged with fines and sediment, which may require removal and replacement. Including vegetation with compost helps prevent the medium from becoming plugged with sediment by breaking up the sediment and creating root pathways for stormwater to penetrate into the compost. It is expected that soil amendments will have a removal and replacement cycle; however, this time frame has not yet been established.

- ~~The space available for ponding water within a Bio-infiltration swale can be sized by either:~~
  - ~~Completely retaining the water quality design volume, i.e., the 91st percentile, 24-hour runoff volume indicated by an approved continuous runoff model (or, the runoff volume from a 6-month 24-hour storm). No reduction in volume is taken for any infiltration. Under this option, the overflow to a dry well or to a surface water must be above the elevation corresponding to the water quality design volume.~~
  - ~~Using the same design sizing procedures outlined in Chapter 3 of Volume III for infiltration facilities designed as treatment facilities.~~

- ~~Drawdown time for the water quality design volume: 48 hours max. See Site Suitability Criterion (SSC 4) in Section 3.3.7, Chapter 3, Volume III.~~
- ~~Swale bottom: flat with a longitudinal slope less than 1%.~~
- ~~The maximum ponded level: 6 inches.~~
- ~~Treatment soil to be at least 18 inches thick with a CEC of at least 5 meq/100 gm dry soil, organic content of at least 1%, and sufficient target pollutant loading capacity. The design soil thickness may be reduced to as low as 6 inches if appropriate performance data demonstrates that the vegetated root zone and the natural soil can be expected to provide adequate removal and loading capacities for the target pollutants. The design professional should calculate the pollutant loading capacity of the treatment soil to estimate if there is sufficient treatment soil volume for an acceptable design period. (See Criteria for Assessing the Trace Element Removal Capacity of Bio-filtration Systems, Stan Miller, Spokane County, June 2000).~~
- ~~Other combinations of treatment soil thickness, CEC, and organic content design factors can be considered if it is demonstrated that the soil and vegetation will provide a target pollutant loading capacity and performance level acceptable to the local jurisdiction.~~
- ~~The treatment zone depth of 6 inches or more should contain sufficient organics and texture to ensure good growth of the vegetation.~~
- ~~The treatment soil infiltration rate should not exceed 1-inch per hour for a treatment zone depth of 6 inches relying on the root zone to enhance pollutant removal. The Site Suitability Criteria in Section 3.3.7 of Chapter 3, Volume III must also be applied, if a design soil depth of 18 inches is used then a maximum infiltration rate of 2.4 inches per hour is applicable.~~
- ~~Use native or adapted grass should be used.~~
- ~~Pretreatment of debris, gross TSS, and oil & grease to prevent the clogging of the treatment soil and/or growth of the vegetation, where necessary.~~
- ~~Identify pollutants, particularly in industrial and commercial area runoff, that could cause a violation of Ecology's ground water quality Standards (Chapter 173-200 WAC). Include appropriate mitigation measures (pretreatment, source control, etc.) for those pollutants.~~

This page purposely left blank

Chapter 8. - Filtration Treatment Facilities

Note: Figures in Chapter 8 are courtesy of King County, except as noted.

This Chapter presents criteria for the design, construction and maintenance of runoff treatment sand filters including basin, vault, and linear filters.

8.1 Purpose

Filtration treatment facilities collect and treat design runoff volumes to remove total suspended solids (TSS), phosphorous, and insoluble organics (including oils) from stormwater.

8.2 Description

A typical sand filtration system consists of a pretreatment system, flow spreader(s), sand bed, and underdrain piping. The sand filter bed includes a geotextile fabric between the sand bed and the bottom underdrain system.

Provide an impermeable liner under the facility if the filtered runoff requires additional treatment to remove soluble ground water pollutants; or where additional ground water protection is mandated.

The variations of a sand filter include a basic sand filter basin, large sand filter basin, sand filter vault, and linear sand filter. (Figures throughout this chapter provide examples of various sand filter configurations.)

The Media Filter Drain (MFD) has four basic components: a gravel no-vegetation zone, a grass strip, the MFD mix bed, and a conveyance system for flows leaving the MFD mix. The MFD mix is composed of gravel, perlite, dolomite, and gypsum.

8.3 Performance Objectives

Refer to Chapter 3 for descriptions of the Basic, Oil, Phosphorous, and Enhanced Performance Treatment Goals.

Basic Sand Filter Vault, Sand Filter Vault, and Linear Sand Filter: Ecology expects basic sand filters to achieve the following average pollutant removals:

- Basic Performance Treatment Goal: 80% total suspended solids (TSS) at influent Event Mean Concentrations (EMCs) of 100-200 mg/L.
- Oil Performance Treatment Goal: Oil and grease to below 10 mg/L daily average and 15 mg/L at any time, with no ongoing or recurring visible sheen in the discharge.

Large Sand filter: Ecology expects large sand filters to meet the Phosphorous Treatment Goal by removing at least 50% of the total phosphorous compounds (influent 0.1 to 0.5 mg/l, as total phosphorous)

and by collecting and treating 95% of the runoff volume. (ASCE and WEF, 1998)

Media filter drain: Ecology expects media filter drains to achieve the:

- Basic Treatment Goal
- Phosphorous Treatment Goal
- Dissolved Metals (Enhanced) Treatment Goals: greater than 30% reduction of dissolved copper, and greater than 60% reduction of dissolved zinc.

8.4 Applications and Limitations

Filtration can be used in most residential, commercial, and industrial developments where debris, heavy sediment loads, and oils and greases will not clog or prematurely overload the sand, or where adequate pretreatment is provided for these pollutants. Specific applications include residential subdivisions, parking lots for commercial and industrial establishments, gas stations, high-use sites, high-density multi-family housing, roadways, and bridge decks.

Locate sand filters off-line before or after detention (Chang, 2000). Sand filters are also suited for locations with space constraints in retrofit, and new/re-development situations. Carefully design overflow or bypass structures to handle the larger storms. Size off-line systems to treat 91% of the runoff volume predicted by a continuous runoff model. If a project must comply with Minimum Requirement #7, Flow Control, route the flows bypassing the filter and the filter discharge to a retention/detention facility.

Pretreatment is necessary to reduce velocities to the sand filter and remove debris, floatables, large particulate matter, and oils. In high water table areas, adequate drainage of the sand filter may require additional engineering analysis and design considerations. Consider an underground filter in areas subject to freezing conditions (Urbonas, 1997).

8.5 Best Management Practices (BMPs) for Sand Filtration

BMP T8.10: Basic Sand Filter Basin

Description

A sand filter basin is constructed so that its surface is at grade and open to the elements, much as an infiltration basin. However, instead of infiltrating into native soils, stormwater filters through a constructed sand bed with an underdrain system. See Figures 8.5.1 through 8.5.4 for more details.

Applications and Limitations

Use a sand filter basin to capture and treat the Water Quality Design Storm volume (see Section 4.1.1); which is 91% of the total runoff volume as predicted by Western Washington Hydrology Model (WWHM). Only 9% of the total runoff volume would bypass or overflow from the sand filter facility.

Locate off-line sand filters either upstream or downstream of detention facilities. Only locate on-line sand filters downstream of detention to prevent exposure of the sand filter surface to high flow rates that could cause loss of media and previously removed pollutants.

Site Suitability

Consider the following site characteristics when siting a sand filtration system:

- Space availability, including a presettling basin
- Sufficient hydraulic head, at least 4 feet from inlet to outlet
- Adequate Operation and Maintenance capability including accessibility for O & M
- Sufficient pretreatment of oil, debris and solids in the tributary runoff

Design Criteria

Hydraulics

If the drainage area maintains a base flow between storm events, bypass the base flow around the filter to keep the sand from remaining saturated for extended periods.

Assume a ***design filtration rate*** of 1 inch per hour. Though the sand specified below will initially infiltrate at a much higher rate, that rate will slow as the filter accumulates sediment. When the filtration rate falls to 1 inch per hour, removal of sediment is necessary to maintain rates above the rate assumed for sizing purposes.

On-line:

- Do NOT place ***upstream*** of a detention facility. In order to prevent exposure of the sand filter surface to high flow rates that could cause loss of media and previously removed pollutants.
- Size on-line sand filters placed ***downstream*** of a detention facility using WWHM or an approved equivalent continuous runoff model to filter the water quality runoff volume.
- Include an ***overflow*** in the design. The overflow height should be at the maximum hydraulic head of the pond above the sand bed. On-line filters shall have overflows (primary, secondary, and emergency) in accordance with the design criteria for detention ponds (Volume III, Section 3.2.1).

Off-line:

- Off-line sand filters placed ***upstream*** of a detention facility must have a flow splitter designed to send all flows at or below the 15-

minute water quality flow rate, as predicted by WWHM, to the sand filter.

- Size the facility to filter all the runoff sent to it (no overflows from the treatment facility should occur). Note that WWHM allows bypass flows and filtered runoff to be directed to the downstream detention facility.
- Off-line sand filters placed ***downstream*** of a detention facility must have a flow splitter designed to send all flows at or below the 2-year flow frequency from the detention pond, as predicted by WWHM, to the treatment facility. The treatment facility must be sized to filter all the runoff sent to it (no overflows from the treatment facility should occur).
- For off-line filters, design the underdrain structure to pass the 2-year peak inflow rate, as determined using 15-minute time steps in an approved continuous runoff model.

Additional Design Criteria

1. Pretreat(e.g., presettling basin, etc. depending on pollutants) runoff directed to the sand filter to remove debris and other solids. In high use sites, the pretreatment should be an appropriate oil treatment as described in Section 3.3.

2. Design inlet bypass and flow spreading structures (e.g., flow spreaders, weirs or multiple orifice openings) to capture the applicable design flow rate, minimize turbulence and to spread the flow uniformly across the surface of the sand filter. Install stone riprap or other energy dissipation devices to prevent gouging of the sand medium and to promote uniform flow. Include emergency spillway or overflow structures.

   a. If the sand filter is curved or an irregular shape, provide a flow spreader for a minimum of 20 percent of the filter perimeter.

   b. If the length-to-width ration of the filter is 2:1 or greater, locate a flow spreader on the longer side of the filter and for a minimum length of 20 percent of the facility perimeter.

   c. Provide erosion protection along the first foot of the sand bed adjacent to the flow spreader. Methods for this include geotextile weighted with sand bags at 15-foot intervals and quarry spalls.

3. The following are design criteria for the underdrain piping:

   Types of acceptable underdrains:

   - A central collector pipe with lateral feeder pipes in an 8-inch gravel backfill or drain rock bed.
   - A central collector pipe with a geotextile drain strip in an 8-inch gravel backfill or drain rock bed.
   - Longitudinal pipes in an 8-inch gravel backfill or drain rock with a collector pipe at the outlet end.

- Upstream of detention, size underdrain piping to handle double the two-year return frequency flow indicated by WWHM (the doubling factor is a safety factor used in the absence of a conversion factor from the 1-hr. time step to a 15 minute time step). Downstream of detention, size the underdrain piping for the two-year return frequency flow indicated by WWHM. In both instances provide at least one (1) foot of hydraulic head above the invert of the upstream end of the collector pipe. (King County, 1998)
- Use underdrain pipe with a minimum of internal diameter of six (6) inches, with two rows of ½-inch holes spaced 6 inches apart longitudinally (maximum), and rows 120 degrees apart (laid with holes downward). Maintain a maximum perpendicular distance between two feeder pipes, or the edge of the filter and a feeder pipe, of 15 feet. For all piping use schedule 40 PVC or piping with a greater wall thickness.
- Slope the main collector underdrain pipe at 0.5 percent minimum. (King County, 1998)
- Use a geotextile fabric (specifications in Appendix V-C) between the sand layer and drain rock or gravel. Cover the geotextile fabric with 1-inch of drain rock/gravel. Use 0.75-1.5 inch drain rock or gravel backfill, washed free of clay and organic material. (King County, 1998)

Place cleanout wyes with caps or junction boxes at both ends of the collector pipes. Extend cleanouts to the surface of the filter. Supply a valve box for access to the cleanouts. Provide access for cleaning all underdrain piping. This may consist of installing cleanout ports, which tee into the underdrain system and surface above the top of the sand bed. To facilitate maintenance of the sand filter an inlet shutoff/bypass valve is recommended.

4. Sand specification: The sand shall be 18 inches minimum in depth and must consist of a medium sand meeting the size gradation (by weight) given in Table 8.5.1. The contractor must obtain a grain size analysis from the supplier to certify that the sand meets the No. 100 and No. 200 sieve requirements. *(Note: Standard backfill for sand drains, Wa. Std. Spec. 9-03.13, does not meet this specification and do not use Spec 9-03.13 for sand filters.)*

Table 8.5.1 Sand Medium Specification	
U.S. Sieve Number	**Percent Passing**
4	95-100
8	70-100
16	40-90
30	25-75
50	2-25
100	<4
200	<2

Source: King County Surface Water Design Manual, September

5. Impermeable Liners for Sand Bed Bottom: Impermeable liners are generally required for soluble pollutants such as metals and toxic organics and where the underflow could cause problems with structures. Impermeable liners may consist of clay, concrete or geomembrane. Clay liners should have a minimum thickness of 12 inches and meet the specifications give in Table 8.5.2:

Table 8.5.2 Clay Liner Specifications			
Property	**Test Method**	**Unit**	**Specification**
Permeability	ASTM D-2434	cm/sec	1×10^{-6} max.
Plasticity Index of Clay	ASTM D-423 & D-424	percent	Not less than 15
Liquid Limit of Clay	ASTM D-2216	percent	Not less than 30
Clay Particles Passing	ASTM D-422	percent	Not less than 30
Clay Compaction	ASTM D-2216	percent	95% of Standard Proctor Density

Source: City of Austin, 1988

- If a geomembrane liner is used it should have a minimum thickness of 30 mils and be ultraviolet resistant. Protect the geomembrane liner from puncture, tearing, and abrasion by installing geotextile fabric on the top and bottom of the geomembrane.
- Concrete liners may also be used for sedimentation chambers and for sedimentation and sand filtration basins less than 1,000 square feet in area. Concrete should be 5 inches thick Class A or better and reinforced by steel wire mesh. The steel wire mesh should be 6 gauge wire or larger and 6-inch by 6-inch mesh or smaller. An "Ordinary Surface Finish" is required. When the underlying soil is clay or has an unconfined compressive strength of 0.25 ton per square foot or less, the concrete should have a minimum 6-inch

compacted aggregate base. This base must consist of coarse sand and river stone, crushed stone or equivalent with diameter of 0.75- to 1-inch.

- If an impermeable liner is not required then a geotextile fabric liner should be installed that retains the sand and meets the specifications listed in Appendix V-C unless the basin has been excavated to bedrock.
- If an impermeable liner is not provided, then an analysis should be made of possible adverse effects of seepage zones on ground water, and near building foundations, basements, roads, parking lots and sloping sites. Sand filters without impermeable liners should not be built on fill sites and should be located at least 20-foot downslope and 100-foot upslope from building foundations.

6. Include an access ramp with a slope not to exceed 7:1, or equivalent, for maintenance purposes at the inlet and the outlet of a surface filter. Consider an access port for inspection and maintenance.
7. Side slopes for earthen/grass embankments should not exceed 3:1 to facilitate mowing.
8. High ground water may damage underground structures or affect the performance of filter underdrain systems. There should be sufficient clearance (at least 2 feet is recommended) between the seasonal high ground water level (highest level of ground water observed) and the bottom of the sand filter to obtain adequate drainage.

Construction Criteria

No runoff should enter the sand filter prior to completion of construction and approval of site stabilization by the responsible inspector. Construction runoff may be routed to a pretreatment sedimentation facility, but discharge from sedimentation facilities should by-pass downstream sand filters. Careful level placement of the sand is necessary to avoid formation of voids within the sand that could lead to short-circuiting, (particularly around penetrations for underdrain cleanouts) and to prevent damage to the underlying geomembranes and underdrain system. Over-compaction should be avoided to ensure adequate filtration capacity. Sand is best placed with a low ground pressure bulldozer (4 psig or less). After the sand layer is placed water settling is recommended. Flood the sand with 10-15 gallons of water per cubic foot of sand.

Maintenance Criteria

Inspections of sand filters and pretreatment systems should be conducted every 6 months and after storm events as needed during the first year of operation, and annually thereafter if filter performs as designed. Repairs should be performed as necessary. Suggestions for maintenance include:

- Accumulated silt, and debris on top of the sand filter should be removed when their depth exceeds 1/2-inch. The silt should be scraped off during dry periods with steel rakes or other devices. Once sediment

is removed, the design permeability of the filtration media can typically be restored by then striating the surface layer of the media. Finer sediments that have penetrated deeper into the filtration media can reduce the permeability to unacceptable levels, necessitating replacement of some or all of the sand.

- Sand replacement frequency is not well established and will depend on suspended solids levels entering the filter (the effectiveness of the pretreatment BMP can be a significant factor).
- Frequent overflow into the spillway or overflow structure or slow drawdown are indicators of plugging problems. A sand filter should empty in 24 hours following a storm event (24 hours for the pre-settling chamber), depending on pond depth. If the hydraulic conductivity drops to one (1) inch per hour corrective action is needed, e.g.:
  - Scraping the top layer of fine-grain sediment accumulation (mid-winter scraping is suggested)
  - Removal of thatch
  - Aerating the filter surface
  - Tilling the filter surface (late-summer rototilling is suggested)
  - Replacing the top 4 inches of sand.
  - Inspecting geotextiles for clogging
- Rapid drawdown in the sand bed (greater than 12 inches per hour) indicates short-circuiting of the filter. Inspect the cleanouts on the underdrain pipes and along the base of the embankment for leakage.
- Drawdown tests for the sand bed could be conducted, as needed, during the wet season. These tests can be conducted by allowing the filter to fill (or partially fill) during a storm event, then measuring the decline in water level over a 4-8 hour period. An inlet and an underdrain outlet valve would be necessary to conduct such a test.
- Formation of rills and gullies on the surface of the filter indicates improper function of the inlet flow spreader, or poor sand compaction. Check for accumulation of debris on or in the flow spreader and refill rills and gullies with sand.
- Avoid driving heavy equipment on the filter to prevent compaction and rut formation.

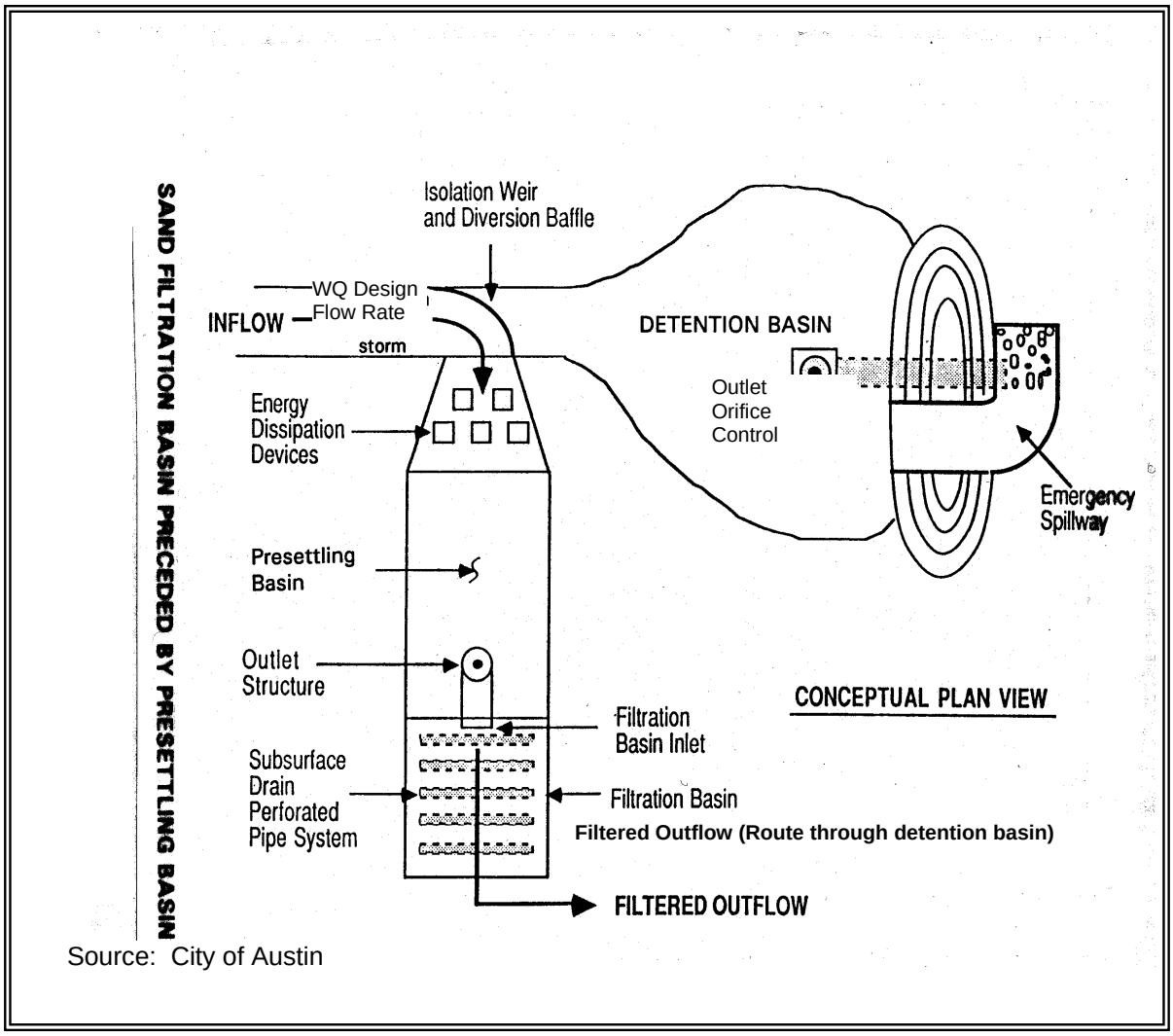

Source: City of Austin

Figure 8.5.1 – Sand Filtration Basin Preceded by Presettling Basin (Variation of a Basic Sand Filter)

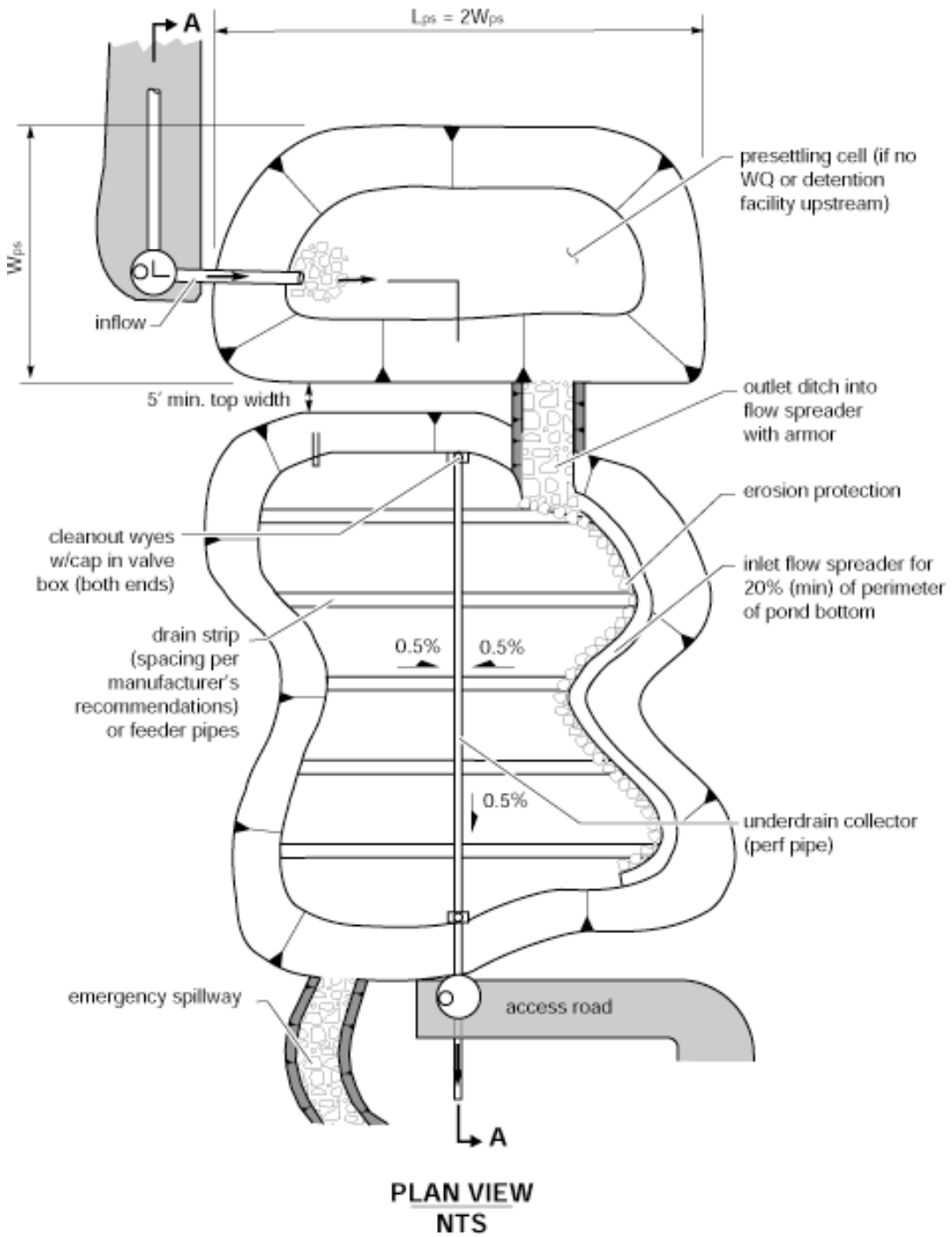

PLAN VIEW
NTS

Figure 8.5.2 – Sand Filter with Pretreatment Cell

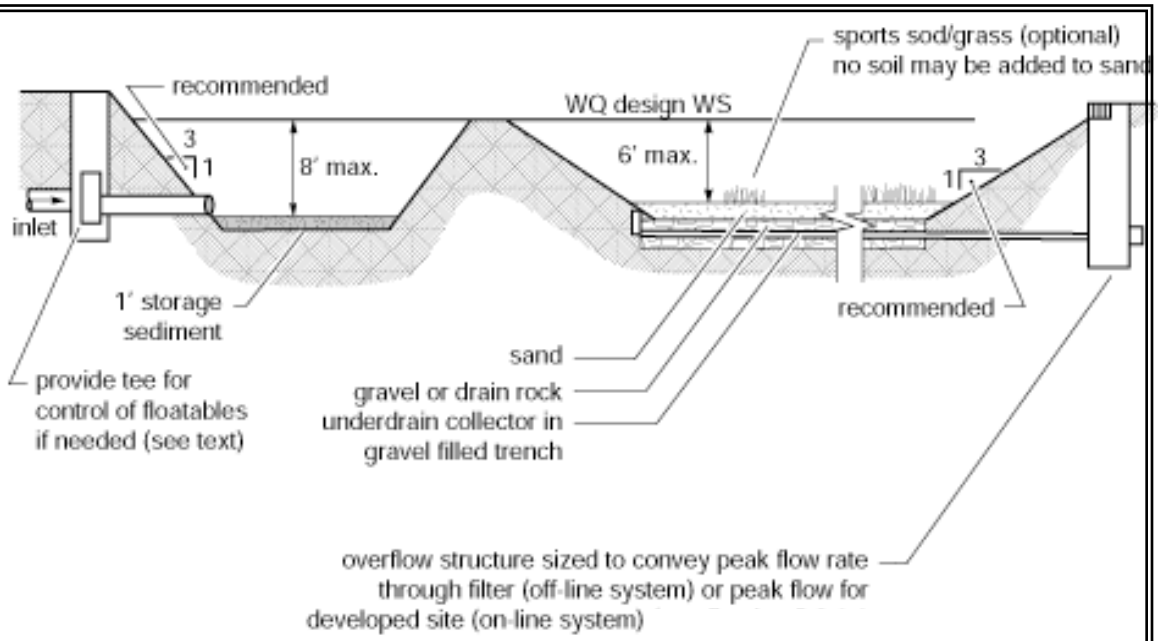

SECTION A-A
NTS

Figure 8.5.2 (cont) Sand Filter with Pretreatment Cell

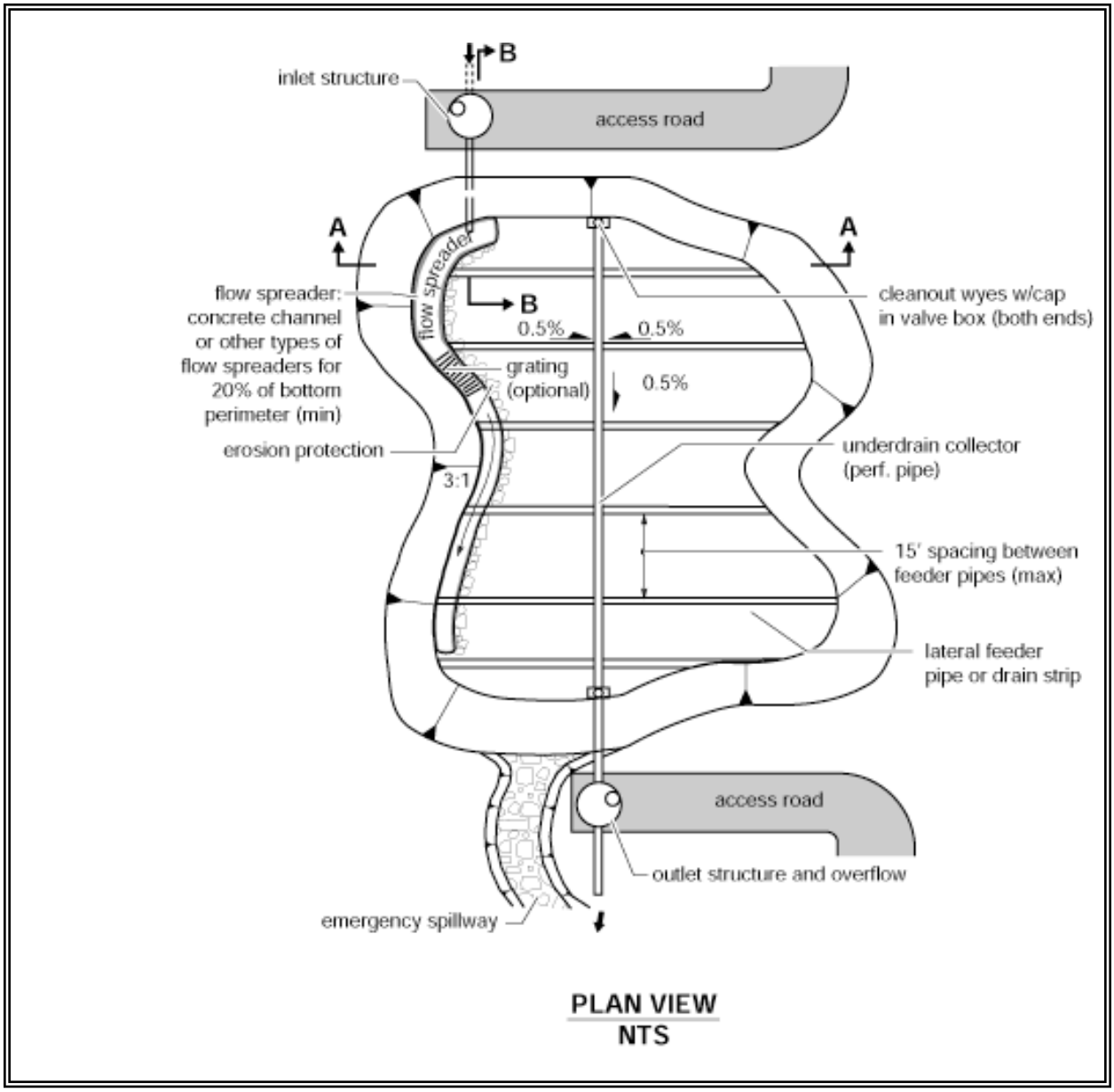

Figure 8.5.3 – Sand Filter with Level Spreader

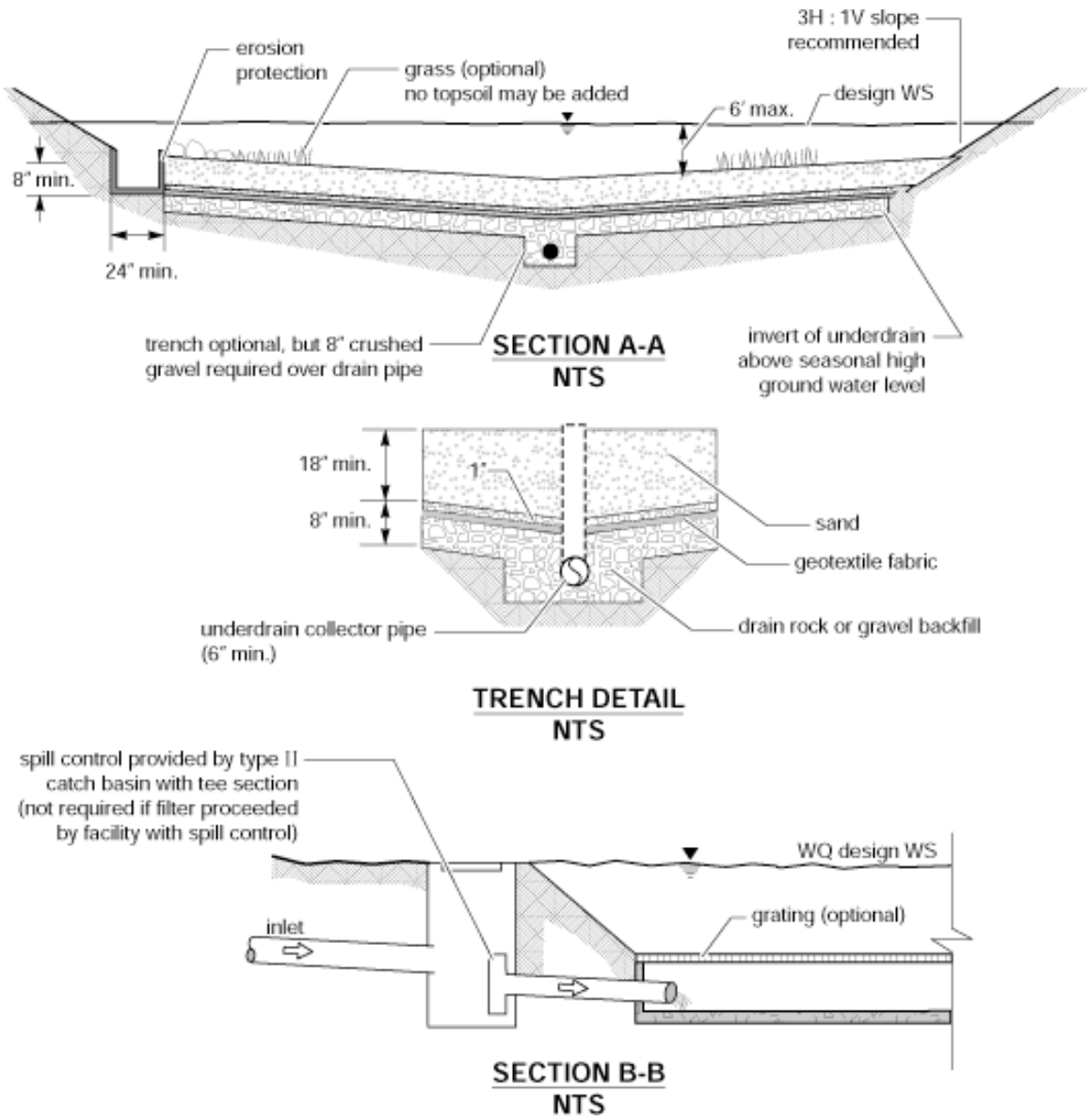

Figure 8.5.3 - (cont) Sand Filter with Level Spreader

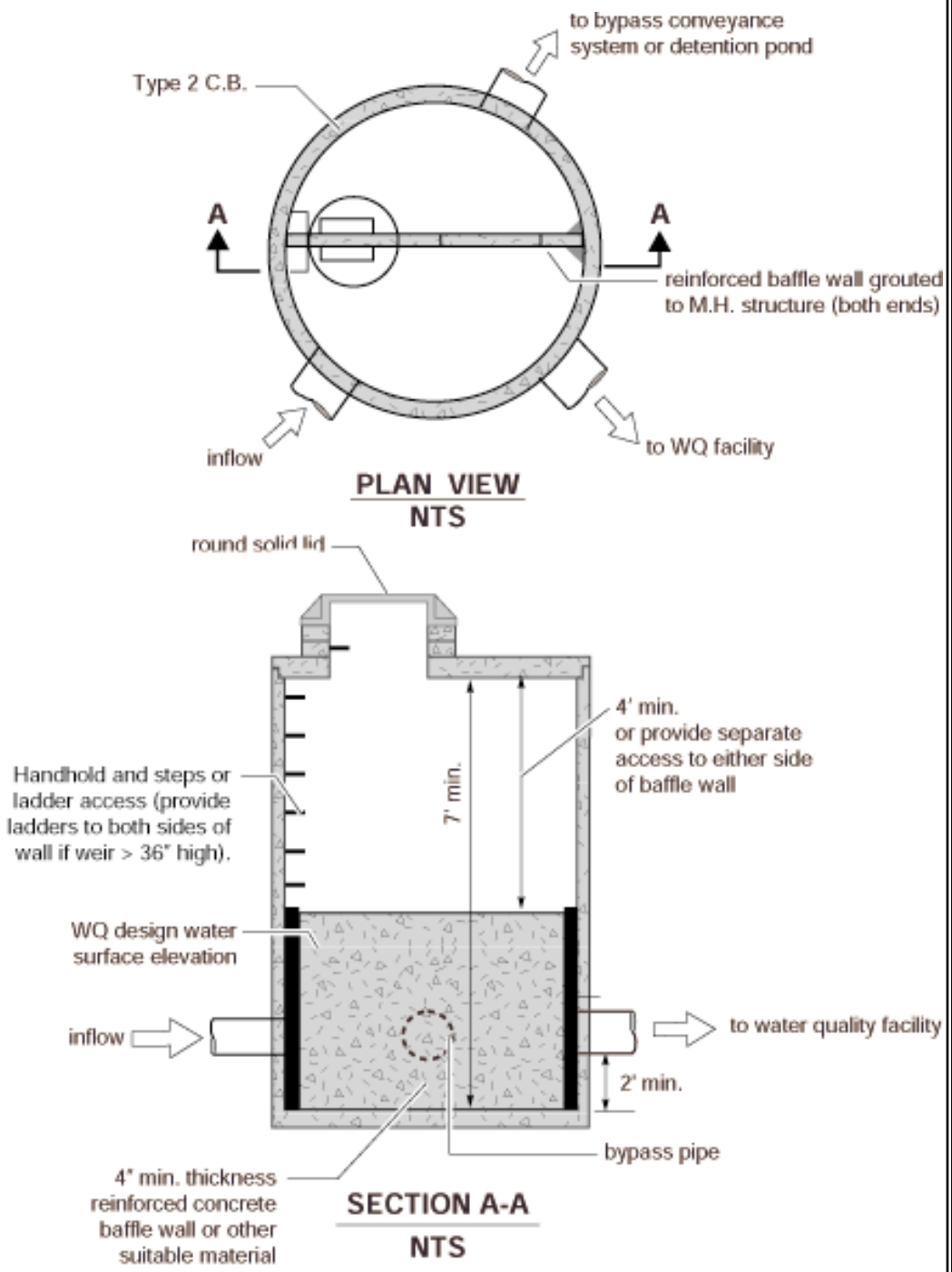

Note: The water quality discharge pipe may require an orifice plate be installed on the outlet to control the height of the design water surface (weir height). The design water surface should be set to provide a minimun headwater/diameter ratio of 2.0 on the outlet pipe.

Figure 8.5.4a – Flow Splitter Option A

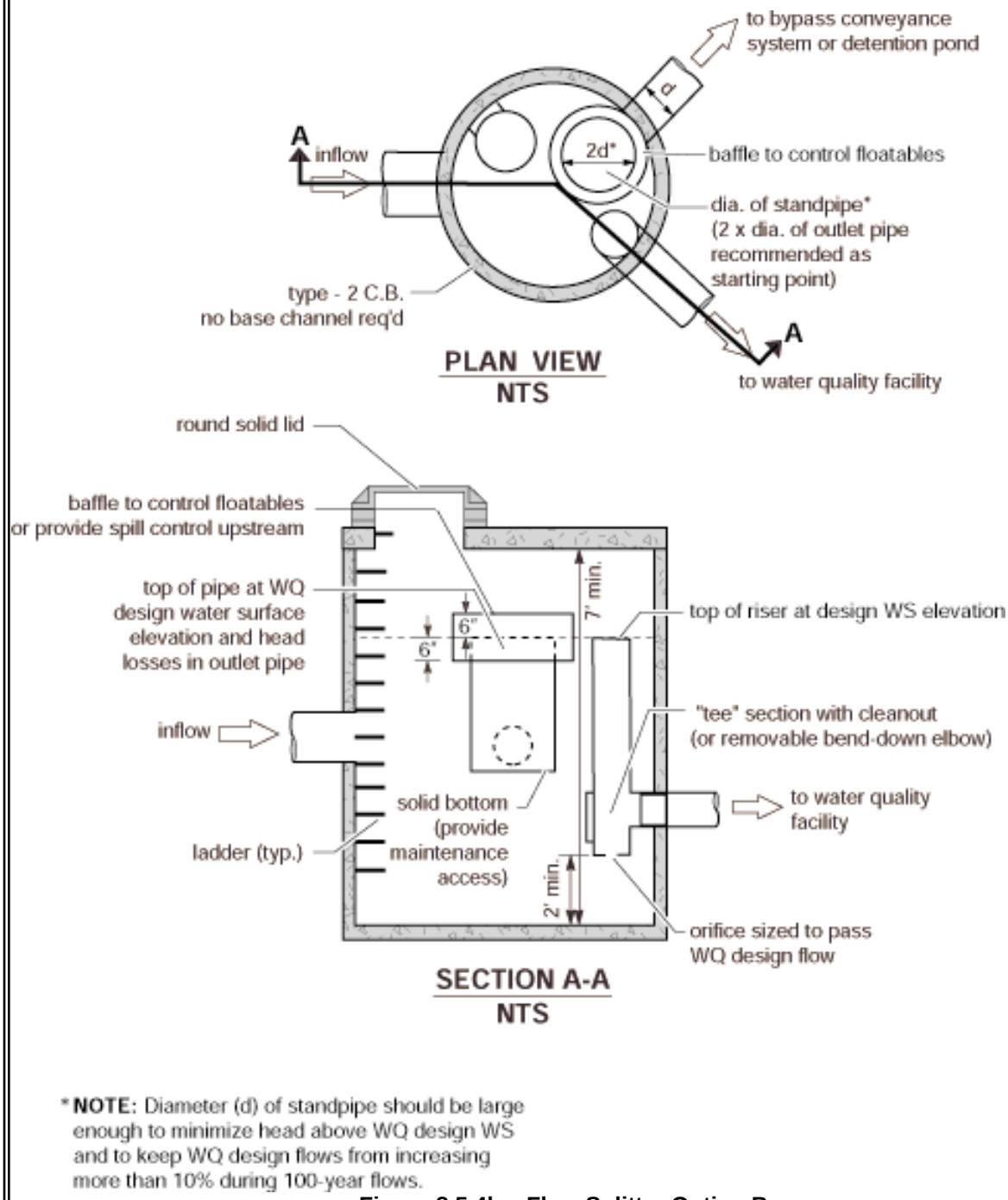

***NOTE:** Diameter (d) of standpipe should be large enough to minimize head above WQ design WS and to keep WQ design flows from increasing more than 10% during 100-year flows.

Figure 8.5.4b – Flow Splitter Option B

BMP T8.11: Large Sand Filter Basin

Description

A Large Sand Filter Basin is virtually identical to a Basic Sand Filter Basin except that it is sized to provide a higher level of treatment. A Basic Sand Filter Basin is listed as a Basic Treatment per Section 3.5. A Large Sand Filter Basin is approved for under the Enhanced Treatment Menu in Section 3.4.

Applications and Limitations

The Large Sand Filter is generally subject to the same Applications and Limitations as BMP T8.10 Basic Sand Filter Basin. The difference is that the Large Sand Filter Basin uses a higher Water Quality Design Storm volume: 95% of the runoff volume of the period modeled in the WWHM model. Only 5% of the total runoff volume as modeled by WWHM would bypass or overflow from the sand filter facility.

Locate off-line sand filters either upstream or downstream of detention facilities. Only locate on-line sand filters downstream of detention to prevent exposure of the sand filter surface to high flow rates that could cause loss of media and previously removed pollutants.

Site Suitability

The Site Suitability for the Large Sand Filter Basin is the same as BMP T8.10 Basic Sand Filter Basin. Please refer to BMP T8.10 Basic Sand Filter Basin for more details.

Design Criteria

Design Volume

As stated the Applications and Limitations of this BMP, the Facility should be sized to capture the Water Quality Design Volume, which is 95% of the runoff volume for the Large Sand Filter Basin (as opposed the 91% for the Basic Sand Filter Basin).

Overflow and Underdrains

The design flows for the overflow and underdrains must be increased from BMP T8.10 Basic Sand Filter Basin to this BMP for the Large Sand Filter Basin.

The Basic Sand Filter Basin that uses the 91% runoff volume as the Water Quality Design Volume, a 2-year return interval peak flow from WWHM or equivalent approved continuous model. The corresponding Overflow and Underdrain Design flow is the 2 Year Storm.

Thus, the Overflow and Underdrain design flow can be calculated by increased the 2 year return interval peak flow by the ration of the 95% runoff volume (water quality design volume for this BMP, Large Sand Filter) and the 91% runoff volume (water quality design volume for BMP T8.10 Basic Sand Filter Basin). In equation form:

Design Flow rate for Large Sand Filter Overflow or Under-drain = (95% runoff Volume)/(91% Runoff Volume) * 2 year return interval peak flow.

For all other design criteria refer to BMP T8.10 Basic Sand Filter Basin.

BMP T8.20: Sand Filter Vault

Description

A sand filter vault is similar to an open sand filter except that the sand layer and underdrains are installed below grade in a vault. It consists of presettling and sand filtration cells. See Figures 8.5.5, 8.5.6a and 8.5.6b for more details.

Application and Limitations

- Use where space limitations preclude above ground facilities
- Not suitable where high water table and heavy sediment loads are expected
- An elevation difference of 4 feet between inlet and outlet is needed

Design Criteria

See design criteria for sand filter basins, including: hydraulics and additional criteria.

Additional Design Criteria for Vaults

- Vaults may be designed as off-line systems or on-line for small drainages
- In an off-line system a diversion structure should be installed to divert the design flow rate into the sediment chamber and bypass the remaining flow to detention/retention (if necessary to meet Minimum Requirement #7), or to surface water.
- Optimize sand inlet flow distribution with minimal sand bed disturbance. A maximum of 8-inch distance between the top of the spreader and the top of the sand bed is suggested. Flows may enter the sand bed by spilling over the top of the wall into a flow spreader pad or alternatively a pipe and manifold system may be used. Any pipe and manifold system must retain the required dead storage volume in the first cell, minimize turbulence, and be readily maintainable.
- If an inlet pipe and manifold system is used, the minimum pipe size should be 8 inches. Multiple inlets are recommended to minimize turbulence and reduce local flow velocities.
- Erosion protection must be provided along the first foot of the sand bed adjacent to the spreader. Geotextile fabric secured on the surface of the sand bed, or equivalent method, may be used.
- The filter bed should consist of a sand top layer, and a geotextile fabric second layer with an underdrain system.
- Design the presettling cell for sediment collection and removal. A V-shaped bottom, removable bottom panels, or equivalent sludge handling system should be used. One-foot of sediment storage in the presettling cell must be provided.
- The pre-settling chamber must be sealed to trap oil and trash. This chamber is usually connected to the sand filtration chamber through an invert elbow to protect the filter surface from oil and trash.

- If a retaining baffle is necessary for oil/floatables in the presettling cell, it must extend at least one foot above to one foot below the design flow water level. Provision for the passage of flows in the event of plugging must be provided. Access opening and ladder must be provided on both sides of the baffle.
- To prevent anoxic conditions, a minimum of 24 square feet of ventilation grate should be provided for each 250 square feet of sand bed surface area. For sufficient distribution of airflow across the sand bed, grates may be located in one area if the sand filter is small, but placement at each end is preferred. Small grates may also be dispersed over the entire sand bed area.
- Provision for access is the same as for wet vaults. Removable panels must be provided over the entire sand bed.
- Sand filter vaults must conform to the materials and structural suitability criteria specified for wet vaults.
- Provide a sand filter inlet shutoff/bypass valve for maintenance
- A geotextile fabric over the entire sand bed may be installed that is flexible, highly permeable, three-dimensional matrix, and adequately secured. This is useful in trapping trash and litter.

Construction Criteria

See sand filter basins, BMP T8.10, and Table 4.5.2 in Section 4.6.

Maintenance Criteria

See sand filter basins, BMP T8.10, and Table 4.5.2 in Section 4.6.

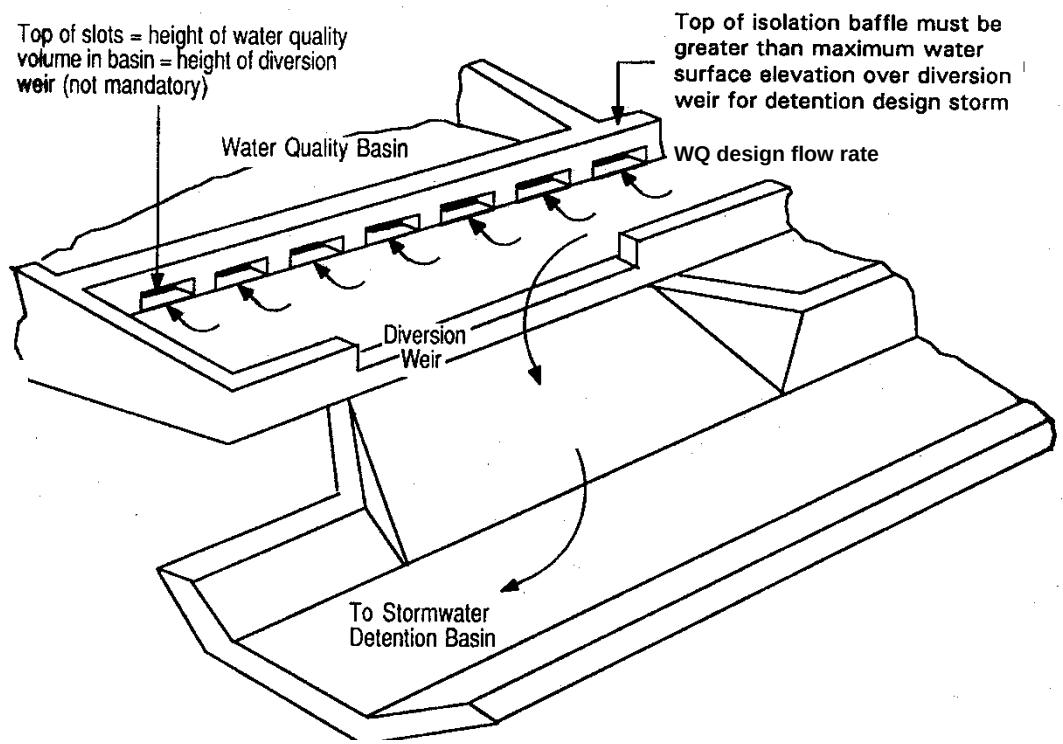

Source: City of Austin

Figure 8.5.5 – Example Isolation/Diversion Structure

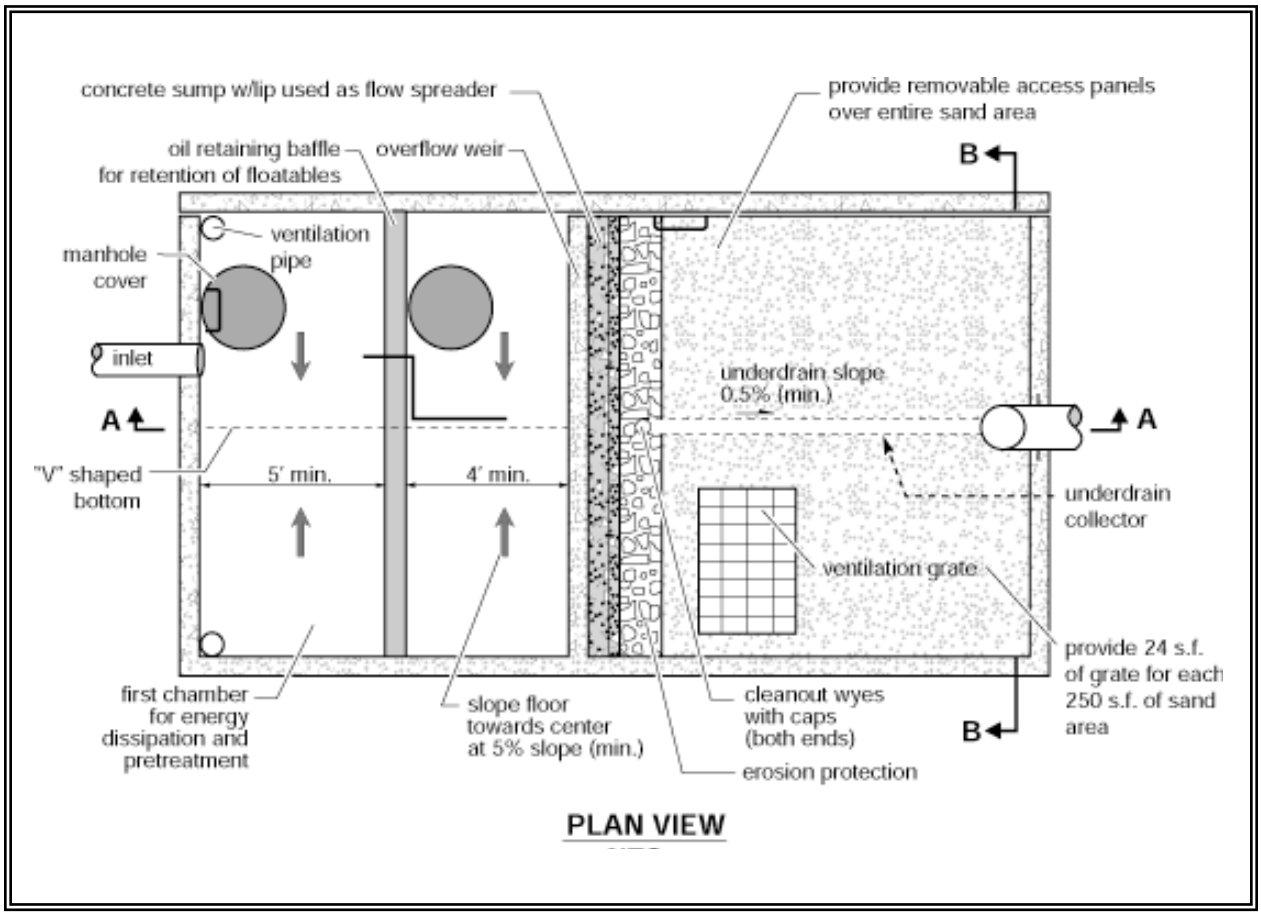

Figure 8.5.6a – Sand Filter Vault

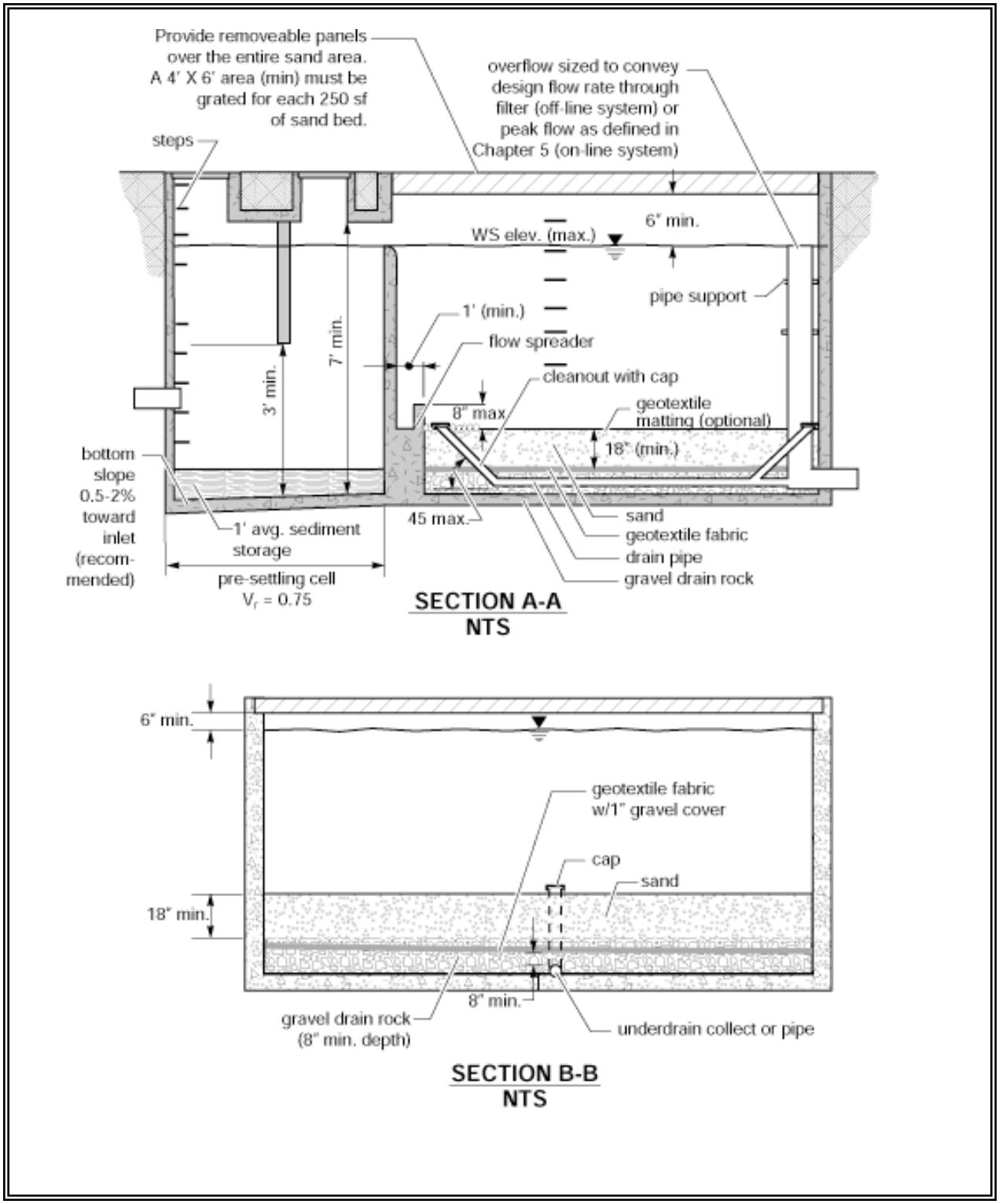

Figure 8.5.6b – Sand Filter Vault (cont)

BMP T8.30: Linear Sand Filter

Description (Figure 8.5.7)

Linear sand filters are typically long, shallow, two-celled, rectangular vaults. The first cell is designed for settling coarse particles, and the second cell contains the sand bed. Stormwater flows into the second cell via a weir section that also functions as a flow spreader.

Application and Limitations

- Applicable in long narrow spaces such as the perimeter of a paved surface.
- As a part of a treatment train as downstream of a filter strip, upstream of an infiltration system, or upstream of a wet pond or a biofilter for oil control.
- To treat small drainages (less than 2 acres of impervious area).
- To treat runoff from high-use sites for TSS and oil/grease removal, if applicable.

Additional Design Criteria for Linear Sand Filters

- The two cells should be divided by a divider wall that is level and extends a ~~minimum~~maximum ~~-~~of 12 inches (minimum of 6 inches) above the sand bed.
- Stormwater may enter the sediment cell by sheet flow or a piped inlet.
- The width of the sand cell must be 1-foot minimum to 15 feet maximum.
- The sand filter bed must be a minimum of 12 inches deep and have an 8-inch layer of drain rock with perforated drainpipe beneath the sand layer.
- The drainpipe must be 6-inch diameter minimum and be wrapped in geotextile and sloped a minimum of 0.5 percent.
- Maximum sand bed ponding depth: 1-foot.
- Must be vented as for sand filter vaults
- Linear sand filters must conform to the materials and structural suitability criteria specified for wet vaults.
- Set sediment cell width as follows:

Sand filter width, (w) inches	12-24	24-48	48-72	72+
Sediment cell width, inches	12	18	24	w/3

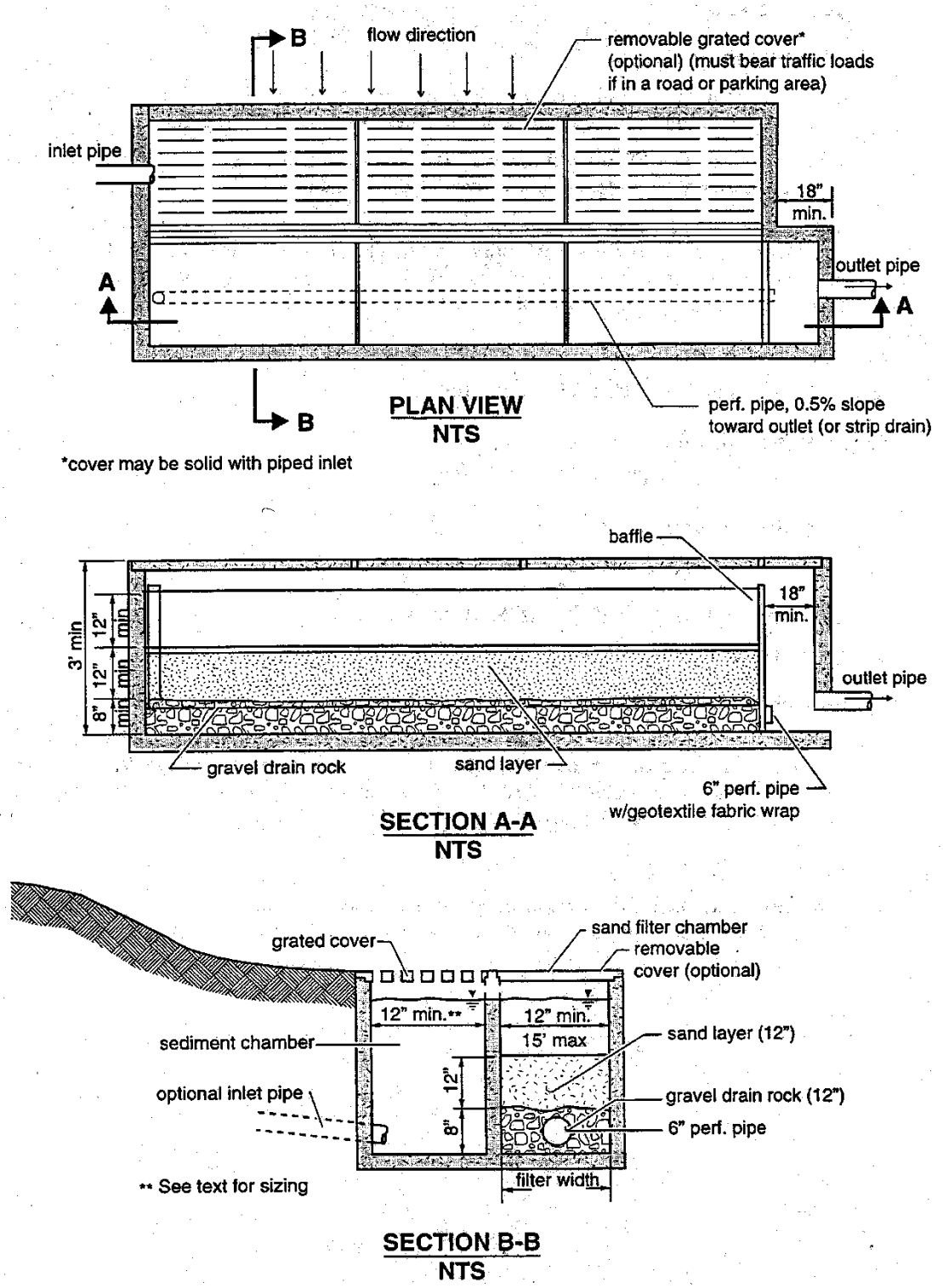

Figure 8.5.7 – Linear Sand Filter

BMP T8.40: Media Filter Drain (previously referred to as the Ecology Embankment)

General Description

The media filter drain (MFD), previously referred to as the *ecology embankment*, is a linear flow-through stormwater runoff treatment device that can be sited along highway side slopes (conventional design) and medians (dual media filter drains), borrow ditches, or other linear depressions. Cut-slope applications may also be considered. The media filter drain can be used where available right of way is limited, sheet flow from the highway surface is feasible, and lateral gradients are generally less than 25% (4H:1V). The media filter drain has a General Use Level Designation (GULD) for basic, enhanced, and phosphorus treatment. Updates/changes to the use-level designation and any design changes will be posted in the *Postpublication Updates* section of the HRM Resource Web Page.

Media filter drains (MFDs) have four basic components: a gravel no-vegetation zone, a grass strip, the MFD mix bed, and a conveyance system for flows leaving the MFD mix. This conveyance system usually consists of a gravel-filled underdrain trench or a layer of crushed surfacing base course (CSBC). This layer of CSBC must be porous enough to allow treated flows to freely drain away from the MFD mix.

Typical MFD configurations are shown in Figures 8.5.8, 8.5.9, and 8.5.10.

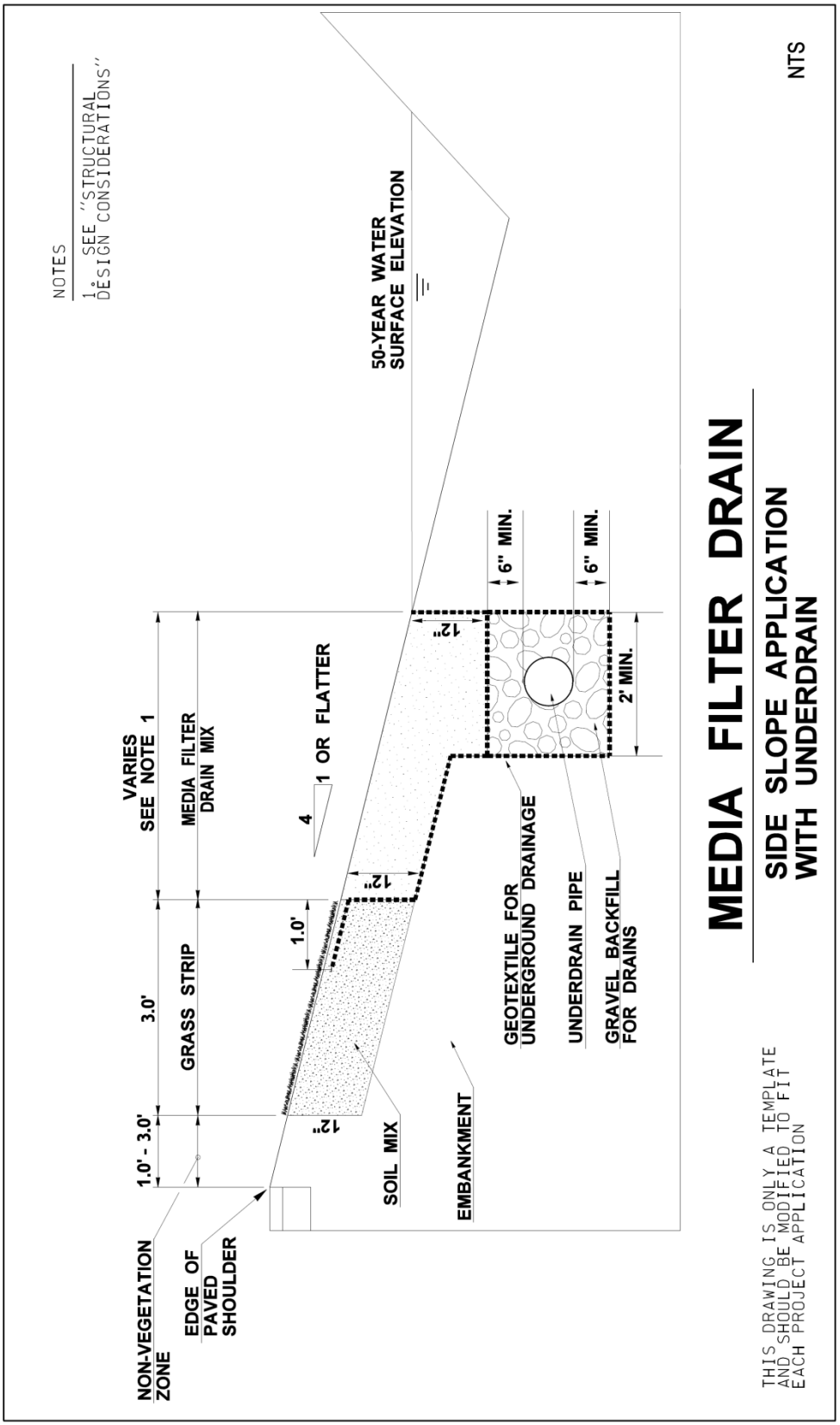

Figure 8.5.8 – Media filter drain: Cross section

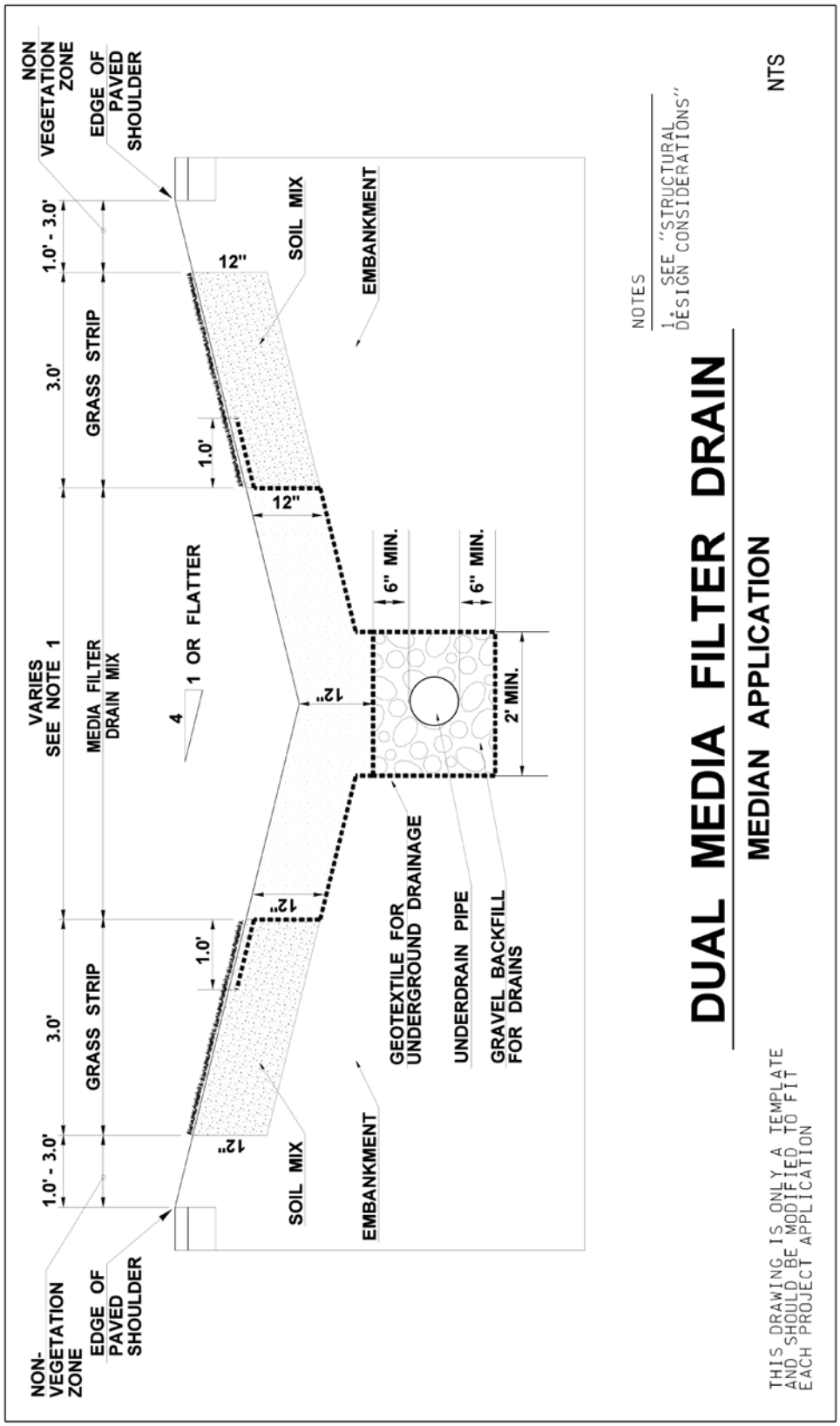

Figure 8.5.9 – Dual media filter drain: Cross section

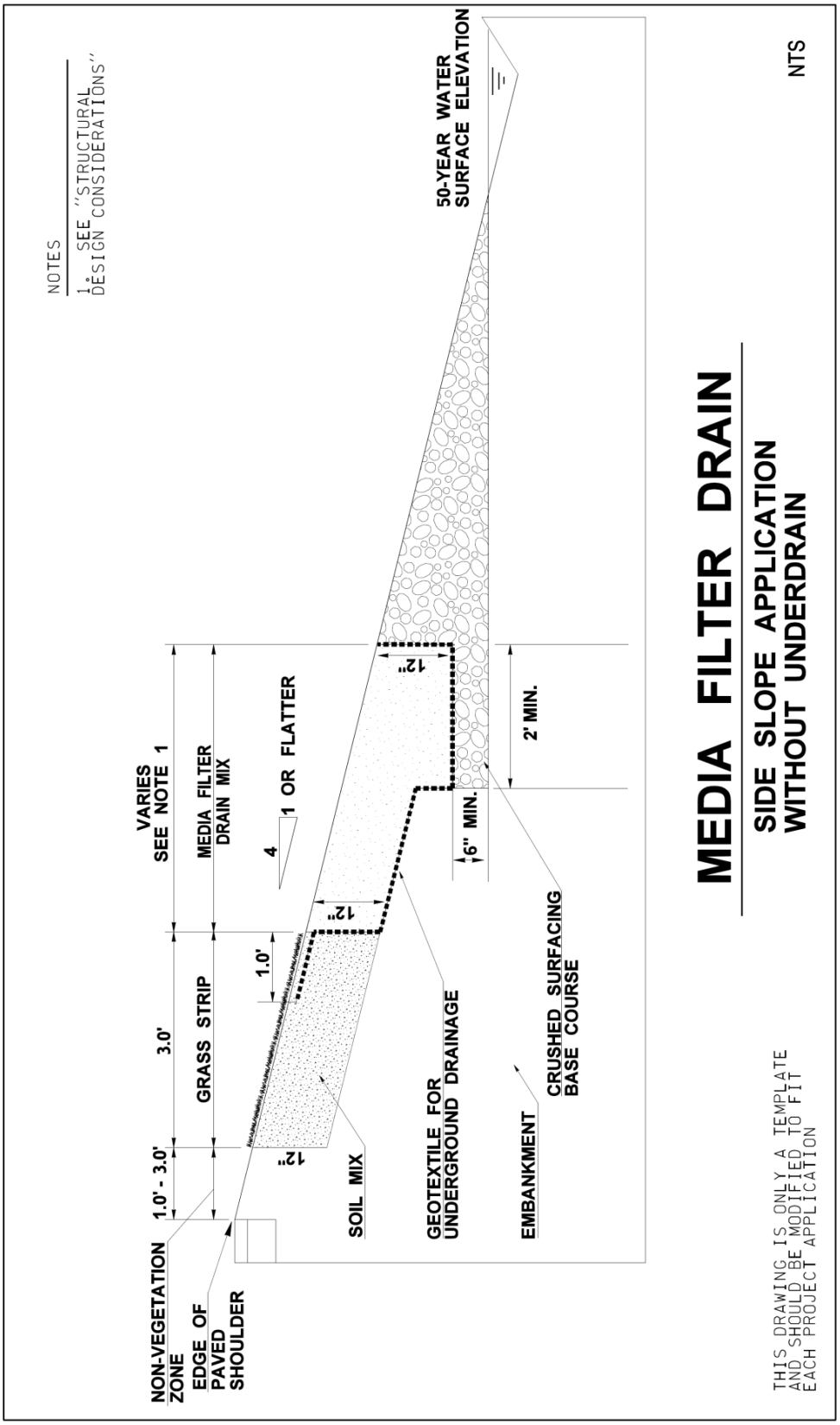

Figure 8.5.10 – Media filter drain without underdrain trench

Functional Description

The media filter drain removes suspended solids, phosphorus, and metals from highway runoff through physical straining, ion exchange, carbonate precipitation, and biofiltration.

Stormwater runoff is conveyed to the media filter drain via sheet flow over a vegetation-free gravel zone to ensure sheet dispersion and provide some pollutant trapping. Next, a grass strip, which may be amended with composted material, is incorporated into the top of the fill slope to provide pretreatment, further enhancing filtration and extending the life of the system. The runoff is then filtered through a bed of porous, alkalinity-generating granular medium—the media filter drain mix. Media filter drain mix is a fill material composed of crushed rock (sized by screening), dolomite, gypsum, and perlite. The dolomite and gypsum additives serve to buffer acidic pH conditions and exchange light metals for heavy metals. Perlite is incorporated to improve moisture retention, which is critical for the formation of biomass epilithic biofilm to assist in the removal of solids, metals, and nutrients. Treated water drains from the media filter drain mix bed into the conveyance system below the media filter drain mix. Geotextile lines the underside of the media filter drain mix bed and the conveyance system.

The underdrain trench is an option for hydraulic conveyance of treated stormwater to a desired location, such as a downstream flow control facility or stormwater outfall. The trench's perforated underdrain pipe is a protective measure to ensure free flow through the media filter drain mix and to prevent prolonged ponding. It may be possible to omit the underdrain pipe if it can be demonstrated that the pipe is not necessary to maintain free flow through the media filter drain mix and underdrain trench.

It is critical to note that water should sheet flow across the media filter drain. Channelized flows or ditch flows running down the middle of the dual media filter drain (continuous off-site inflow) should be minimized.

Applications and Limitations

In many instances, conventional runoff treatment is not feasible due to right of way constraints (such as adjoining wetlands and geotechnical considerations). The media filter drain and the dual media filter drain designs are runoff treatment options that can be sited in most right of way confined situations. In many cases, a media filter drain or a dual media filter drain can be sited without the acquisition of additional right of way needed for conventional stormwater facilities or capital-intensive expenditures for underground wet vaults.

Applications

Media Filter Drains

The media filter drain can achieve basic, phosphorus, and enhanced water quality treatment.

Since maintaining sheet flow across the media filter drain is required for its proper function, the ideal locations for media filter drains in highway settings are highway side slopes or other long, linear grades with lateral side slopes less than 4H:1V and longitudinal slopes no steeper than 5%. As side slopes approach 3H:1V, without design modifications, sloughing may become a problem due to friction limitations between the separation geotextile and underlying soils. The longest flow path from the contributing area delivering sheet flow to the media filter drain should not exceed 150 feet.

If there is sufficient roadway embankment width, the designer should consider placing the grass strip and media mix downslope when feasible. The project office should ensure the MFD does not intercept seeps, springs, or ground water.

Dual Media Filter Drain for Highway Medians

The dual media filter drain is fundamentally the same as the side-slope version. It differs in siting and is more constrained with regard to drainage options. Prime locations for dual media filter drains in a highway setting are medians, roadside drainage or borrow ditches, or other linear depressions. It is especially critical for water to sheet flow across the dual media filter drain. Channelized flows or ditch flows running down the middle of the dual media filter drain (continuous off-site inflow) should be minimized.

Limitations

Media Filter Drains

- **Steep slopes.** Avoid construction on longitudinal slopes steeper than 5%. Avoid construction on 3H:1V lateral slopes, and preferably use less than 4H:1V slopes. In areas where lateral slopes exceed 4H:1V, it may be possible to construct terraces to create 4H:1V slopes or to otherwise stabilize up to 3H:1V slopes. (For details, see *Geometry, Components* and *Sizing Criteria, Cross Section* in the Structural Design Considerations section below).
- **Wetlands.** Do not construct in wetlands and wetland buffers. In many cases, a media filter drain (due to its small lateral footprint) can fit within the highway fill slopes adjacent to a wetland buffer. In those situations where the highway fill prism is located adjacent to wetlands, an interception trench/underdrain will need to be incorporated as a design element in the media filter drain.
- **Shallow ground water.** Mean high water table levels at the project site need to be determined to ensure the media filter drain mix bed and the underdrain (if needed) will not become saturated by shallow ground water.
- **Unstable slopes**. In areas where slope stability may be problematic, consult a geotechnical engineer.

- **Areas of seasonal ground water inundations or basement flooding**. Site-specific piezometer data may be needed in areas of suspected seasonal high ground water inundations. The hydraulic and runoff treatment performance of the dual media filter drain may be compromised due to backwater effects and lack of sufficient hydraulic gradient.
- Narrow roadway shoulders. In areas where there is a narrow roadway shoulder that does not allow enough room for a vehicle to fully stop or park, consider placing the MFD farther down the embankment slope. This will reduce the amount of rutting in the MFD and decrease overall maintenance repairs.

Design Flow Elements

Flows to Be Treated

The basic design concept behind the media filter drain and dual media filter drain is to fully filter all runoff through the media filter drain mix. Therefore, the infiltration capacity of the medium and drainage below needs to match or exceed the hydraulic loading rate.

Structural Design Considerations

Geometry

Components

No-Vegetation Zone

The no-vegetation zone (vegetation-free zone) is a shallow gravel zone located directly adjacent to the highway pavement. The no-vegetation zone is a crucial element in a properly functioning media filter drain or other BMPs that use sheet flow to convey runoff from the highway surface to the BMP. The no-vegetation zone functions as a level spreader to promote sheet flow and a deposition area for coarse sediments. The no-vegetation zone should be between 1 foot and 3 feet wide. Depth will be a function of how the roadway section is built from subgrade to finish grade; the resultant cross section will typically be triangular to trapezoidal. Within these bounds, width varies depending on maintenance spraying practices.

Grass Strip

The width of the grass strip is dependent on the availability of space within the highway side slope. The baseline design criterion for the grass strip within the media filter drain is a 3-foot-minimum-width, but wider grass strips are recommended if the additional space is available. The designer may consider adding aggregate to the soil mix to help minimize rutting problems from errant vehicles. The soil mix should ensure grass growth for the design life of the media filter drain. Composted material used in the grass strip shall meet the specifications for compost used in Bioretention Soil Media (BSM). See BMP T7.30.

Media Filter Drain Mix Bed

The media filter drain mix is a mixture of crushed rock, dolomite, gypsum, and perlite. The crushed rock provides the support matrix of the medium; the dolomite and gypsum add alkalinity and ion exchange capacity to promote the precipitation and exchange of heavy metals; and the perlite improves moisture retention to promote the formation of biomass within the media filter drain mix. The combination of physical filtering, precipitation, ion exchange, and biofiltration enhances the water treatment capacity of the mix. The media filter drain mix has an estimated initial filtration rate of 50 inches per hour and a long-term filtration rate of 28 inches per hour due to siltation. With an additional safety factor, the rate used to size the length of the media filter drain should be 10 inches per hour.

Conveyance System Below Media Filter Drain Mix

The gravel underdrain trench provides hydraulic conveyance when treated runoff needs to be conveyed to a desired location such as a downstream flow control facility or stormwater outfall.

In Group C and D soils, an underdrain pipe would help to ensure free flow of the treated runoff through the media filter drain mix bed. In some Group A and B soils, an underdrain pipe may be unnecessary if most water percolates into subsoil from the underdrain trench. The need for underdrain pipe should be evaluated in all cases. The underdrain trench should be a minimum of 2 feet wide for either the conventional or dual media filter drain.

The gravel underdrain trench may be eliminated if there is evidence to support that flows can be conveyed laterally to an adjacent ditch or onto a fill slope that is properly vegetated to protect against erosion. The media filter drain mix should be kept free draining up to the 50-year storm event water surface elevation represented in the downstream ditch.

Sizing Criteria

Width

The width of the media filter drain mix bed is determined by the amount of contributing pavement routed to the embankment. The surface area of the media filter drain mix bed needs to be sufficiently large to fully infiltrate the runoff treatment design flow rate using the long-term filtration rate of the media filter drain mix. For design purposes, a 50% safety factor is incorporated into the long-term media filter drain mix filtration rate to accommodate variations in slope, resulting in a design filtration rate of 10 inches per hour. The media filter drain mix bed should have a bottom width of at least 2 feet in contact with the conveyance system below the media filter drain mix.

Length

In general, the length of a media filter drain or dual media filter drain is the same as the contributing pavement. Any length is acceptable as long as the surface area media filter drain mix bed is sufficient to fully infiltrate the runoff treatment design flow rate.

Cross Section

In profile, the surface of the media filter drain should preferably have a lateral slope less than 4H:1V (<25%). On steeper terrain, it may be possible to construct terraces to create a 4H:1V slope, or other engineering may be employed if approved by Ecology, to ensure slope stability up to 3H:1V. If sloughing is a concern on steeper slopes, consideration should be given to incorporating permeable soil reinforcements, such as geotextiles, open-graded/ permeable pavements, or commercially available ring and grid reinforcement structures, as top layer components to the media filter drain mix bed. Consultation with a geotechnical engineer is required.

Inflow

Runoff is conveyed to a media filter drain using sheet flow from the pavement area. The longitudinal pavement slope contributing flow to a media filter drain should be less than 5%.

Although there is no lateral pavement slope restriction for flows going to a media filter drain, the designer should ensure flows remain as sheet flow.

Media Filter Drain Mix Bed Sizing Procedure

The media filter drain mix should be a minimum of 12 inches deep, including the section on top of the underdrain trench.

For runoff treatment, sizing the media filter drain mix bed is based on the requirement that the runoff treatment flow rate from the pavement area, $Q_{Highway,}$ cannot exceed the long-term infiltration capacity of the media filter drain, $Q_{Infiltration}$:

$$_{Highway\ Infiltration}Q \leq Q$$

For western Washington, $Q_{Highway}$ is the flow rate at or below which 91% of the runoff volume for the developed TDA will be treated, based on a 15-minute time step and can be determined using and approved continuous runoff model.

The long-term infiltration capacity of the media filter drain is based on the following equation:

$$\frac{LTIR * L * W}{C * SF} = Q_{Infiltration}$$

where: *LTIR* = Long-term infiltration rate of the media filter drain mix (use 10 inches per hour for design) (in/hr)

L = Length of media filter drain (parallel to roadway) (ft)

W = Width of the media filter drain mix bed (ft)

C = Conversion factor of 43200 ((in/hr)/(ft/sec))

SF = Safety Factor (equal to 1.0, unless unusually heavy sediment loading is expected)

Assuming that the length of the media filter drain is the same as the length of the contributing pavement, solve for the width of the media filter drain:

$$W \geq \frac{Q_{Highway} * C * SF}{LTIR * L}$$

Western Washington project applications of this design procedure have shown that, in almost every case, the calculated width of the media filter drain does not exceed 1.0 foot. Therefore, Table 8.5.3 was developed to simplify the design steps and should be used to establish an appropriate width.

Table 8.5.3
Western Washington Design Widths for Media Filter Drains

Pavement width that contributes runoff to the media filter drain	Minimum media filter drain width*
≤ 20 feet	2 feet
≥ 20 and ≤ 35 feet	3 feet
> 35 feet	4 feet

* Width does not include the required 1–3 foot gravel vegetation-free zone or the 3-foot filter strip width (see Figure 8.5.8).

Underdrain Design

Underdrain pipe can provide a protective measure to ensure free flow through the media filter drain (MFD) mix and is sized similar to storm drains. For MFD underdrain sizing, an additional step is required to determine the flow rate that can reach the underdrain pipe. This is done by

comparing the contributing basin flow rate to the infiltration flow rate through the media filter mix and then using the smaller of the two to size the underdrain. The analysis described below considers the flow rate per foot of MFD, which allows you the flexibility of incrementally increasing the underdrain diameter where long lengths of underdrain are required. When underdrain pipe connects to a storm drain system, place the invert of the underdrain pipe above the 25-year water surface elevation in the storm drain to prevent backflow into the underdrain system.

The following describes the procedure for sizing underdrains installed in combination with media filter drains.

1. Calculate the flow rate per foot from the contributing basin to the media filter drain. The design storm event used to determine the flow rate should be relevant to the purpose of the underdrain. For example, if the MFD installation is in western Washington and the underdrain will be used to convey treated runoff to a detention BMP, size the underdrain for the 50-year storm event. (See the *Hydraulics Manual*, Figure 2-2.1, for conveyance flow rate determination.)

$$\frac{Q_{highway}}{ft} = \frac{Q_{highway}}{L_{MFD}}$$

where:

$\frac{Q_{highway}}{ft}$ = contributing flow rate per foot (cfs/ft)

L_{MFD} = length of MFD contributing runoff to the underdrain (ft)

2. Calculate the MFD flow rate of runoff per foot given an infiltration rate of 10 in/hr through the media filter drain mix.

$$Q_{\frac{MFD}{ft}} = \frac{f \times W \times 1\,ft}{ft} \times \frac{1\,ft}{12in} \times \frac{1hr}{3600\sec}$$

where:

$Q_{\frac{MFD}{ft}}$ = flow rate of runoff through MFD mix layer (cfs/ft)

W = width of underdrain trench (ft) – see Standard Plan B-55.20-00; the minimum width is 2 ft

f = infiltration rate though the MFD mix (in/hr) = 10 in/hr

3. Size the underdrain pipe to convey the runoff that can reach the underdrain trench. This is taken to be the smaller of the contributing basin flow rate or the flow rate through the MFD mix layer.

$$Q_{\frac{UD}{ft}} = smaller \left\{ Q_{\frac{highway}{ft}} \; or \; Q_{\frac{MFD}{ft}} \right\}$$

where:

$Q_{\frac{UD}{ft}}$ = underdrain design flow rate per foot (cfs/ft)

4. Determine the underdrain design flow rate using the length of the MFD and a factor of safety of 1.2.

$$Q_{UD} = 1.2 \times Q_{\frac{UD}{ft}} \times W \times L_{MFD}$$

where:

Q_{UD} = estimated flow rate to the underdrain (cfs)
W = width of the underdrain trench (ft) – see Standard Plan B-55.20-00; the minimum width is 2 ft
L_{MFD} = length of MFD contributing runoff to the underdrain (ft)

5. Given the underdrain design flow rate, determine the underdrain diameter. Round pipe diameters to the nearest standard pipe size and have a minimum diameter of 6 inches. For diameters that exceed 12 inches, contact either the Region or HQ Hydraulics Office.

$$D = 16\left(\frac{(Q_{UD} \times n)}{s^{0.5}}\right)^{3/8}$$

where:

D = underdrain pipe diameter (inches)
n = Manning's coefficient
s = slope of pipe (ft/ft)

Materials

Media Filter Drain Mix

The media filter drain mix used in the construction of media filter drains consists of the amendments listed in Table 8.5.4. Mixing and transportation must occur in a manner that ensures the materials are thoroughly mixed prior to placement and that separation does not occur during transportation or construction operations.

These materials should be used in accordance with the following *Standard Specifications*:

- Gravel Backfill for Drains, 9-03.12(4)
- Underdrain Pipe, 7-01.3(2)
- Construction Geotextile for Underground Drainage, 9-33.1

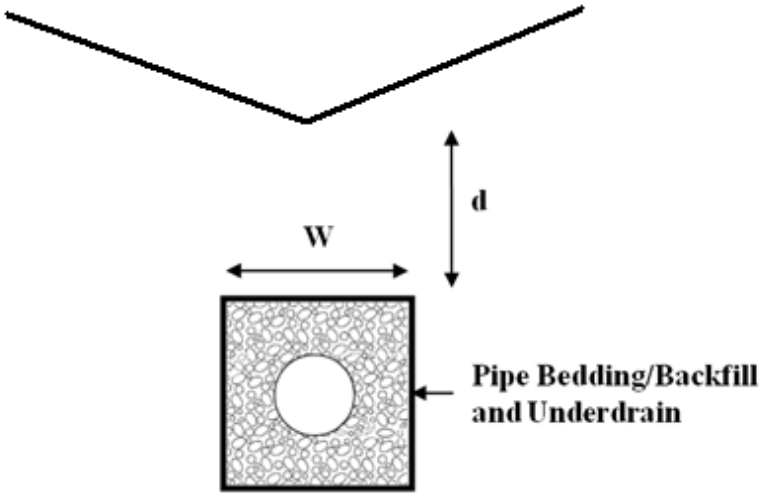

Figure 8.5.4 - Media filter drain underdrain installation

Crushed Surfacing Base Course (CSBC)

If the design is configured to allow the media filter drain to drain laterally into a ditch, the crushed surfacing base course below the media filter drain should conform to Section 9-03.9(3) of the *Standard Specifications.*

Berms, Baffles, and Slopes

See *Geometry, Components* and *Sizing Criteria, Cross Section* under Structural Design Considerations above.

Table 8.5.4 Media filter drain mix

Amendment	Quantity
Mineral aggregate: Aggregate for Media Filter Drain Mix Aggregate for Media filter Drain Mix shall be manufactured from ledge rock, talus, or gravel in accordance with Section 3-01 of the *Standard Specifications for Road, Bridge, and Municipal Construction* (2002), which meets the following test requirements for quality. The use of recycled material is not permitted.: Los Angeles Wear, 500 Revolutions 35% max. Degradation Factor 30 min. Aggregate for the Media Filter Drain Mix shall conform to the following requirements for grading and quality: **Sieve Size** **Percent Passing (by weight)** 1/2" square 100 3/8" square 90-100 U.S. No. 4 30-56 U.S. No. 10 0-10 U.S. No. 200 0-1.5 % fracture, by weight, min. 75 Static stripping test Pass The fracture requirement shall be at least two fractured faces and will apply to material retained on the U.S. No. 10. Aggregate for the Media Filter Drain shall be substantially free from adherent coatings. The presence of a thin, firmly adhering film of weathered rock shall not be considered as coating unless it exists on more than 50% of the surface area of any size between successive laboratory sieves.	3 cubic yards
Perlite: ☐ Horticultural grade, free of any toxic materials) ☐ 0-30% passing US No. 18 Sieve ☐ 0-10% passing US No. 30 Sieve	1 cubic yard per 3 cubic yards of mineral aggregate
Dolomite: CaMg(CO3)2 (calcium magnesium carbonate) ☐ Agricultural grade, free of any toxic materials) ☐ 100% passing US No. 8 Sieve ☐ 0% passing US No. 16 Sieve	10 pounds per cubic yard of perlite
Gypsum: Noncalcined, agricultural gypsum CaSO4•2H2O (hydrated calcium sulfate) ☐ Agricultural grade, free of any toxic materials) ☐ 100% passing US No. 8 Sieve ☐ 0% passing US No. 16 Sieve	**1.5 pounds per cubic yard of perlite**

	Site Design Elements
Landscaping (Planting Considerations)	Landscaping for the grass strip is the same as for biofiltration swales unless otherwise specified in the special provisions for the project's construction documents.
Operations and Maintenance	Maintenance will consist of routine roadside management. While herbicides must not be applied directly over the media filter drain, it may be necessary to periodically control noxious weeds with herbicides in areas around the media filter drain as part of a roadside management program. The use of pesticides may be prohibited if the media filter drain is in a critical aquifer recharge area for drinking water supplies. The designer should check with the local area water purveyor or local health department. Areas of the media filter drain that show signs of physical damage will be replaced by local maintenance staff in consultation with region hydraulics/water quality staff.
Construction Criteria	Keep effective erosion and sediment control measures in place until grass strip is established. Do not allow vehicles or traffic on the MFD to minimize rutting and maintenance repairs
Signing	Nonreflective guideposts will delineate the media filter drain. This practice allows personnel to identify where the system is installed and to make appropriate repairs should damage occur to the system. If the media filter drain is in a critical aquifer recharge area for drinking water supplies, signage prohibiting the use of pesticides must be provided.

Chapter 9. - Biofiltration Treatment Facilities

Note: Figures in Chapter 9 are courtesy of King County, except as noted.

This Chapter addresses Best Management Practices (BMPs) that are classified as biofiltration treatment facilities:

Biofilters are vegetated treatment systems (typically grass) that remove pollutants by means of sedimentation, filtration, soil sorption, and/or plant uptake. They are typically configured as swales or flat filter strips.

9.1 Purpose

The BMPs discussed in this Chapter are designed to remove low concentrations and quantities of total suspended solids (TSS), heavy metals, petroleum hydrocarbons, and/or nutrients from stormwater.

9.2 Applications

A biofilter can be used as a basic treatment BMP for contaminated stormwater runoff from roadways, driveways, parking lots, and highly impervious ultra-urban areas or as the first stage of a treatment train. In cases where hydrocarbons, high TSS, or debris would be present in the runoff, such as high-use sites, a pretreatment system for those components would be necessary. Off-line location is preferred to avoid flattening vegetation and the erosive effects of high flows. Consider biofilters in retrofit situations where appropriate. (Center for Watershed Protection, 1998)

9.3 Site Suitability

Consider the following factors for determining site suitability:

- Target pollutants are amenable to biofilter treatment
- Accessibility for Operation and Maintenance
- Suitable growth environment; (soil, etc.) for the vegetation
- Adequate siting for a pre-treatment facility if high petroleum hydrocarbon levels (oil/grease) or high TSS loads could impair treatment capacity or efficiency
- If the biofilter can be impacted by snowmelts and ice, refer to Caraco and Claytor for additional design criteria (USEPA, 1997).

9.4 Best Management Practices

This Chapter presents the numerous Biofiltration Treatment BMPs.

BMP T9.10: Basic Biofiltration Swale

Description

Biofiltration swales are typically shaped as a trapezoid or a parabola as shown in Figure 9.4.1.

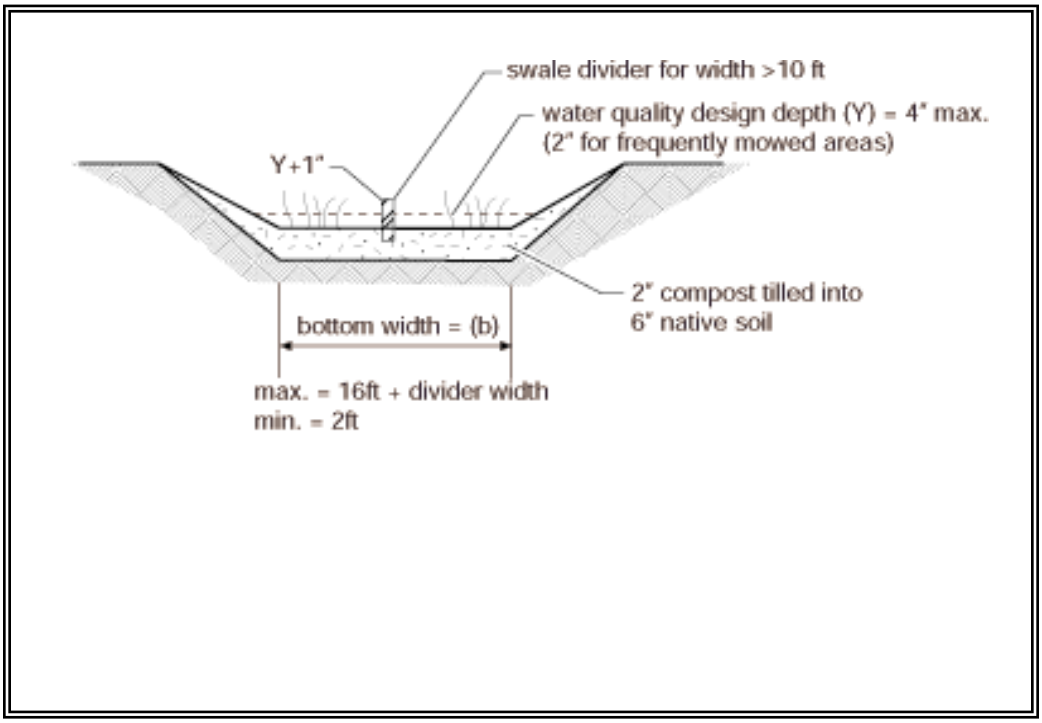

Figure 9.4.1 – Typical Swale Section

Limitations

Data suggest that the performance of biofiltration swales is highly variable from storm to storm. Ecology recommends considering other treatment methods that perform more consistently, such as sand filters and wet ponds, before using a biofiltration swale. Biofitlration swales downstream of devices of equal or greater effectiveness can convey runoff; but do not consider them to offer a treatment benefit. (Horner, 2000)

Design Criteria

- Table 9.4.1 specifies design criteria. Use a 9 minute hydraulic residence time at a multiple of the peak 15 minute Water Quality Design Flow Rate (Q) representing 91% runoff volume as determined by the Western Washington Hydrology Model (WWHM).
- Check the hydraulic capacity/stability for inflows greater than design flows. Bypass high flows, or control release rates into the biofilter, if necessary.
- Install level spreaders (min. 1-inch gravel) at the head and every 50 feet in swales of ≥4 feet width. Include sediment cleanouts (weir, settling basin, or equivalent) at the head of the biofilter as needed.
- Use energy dissipators (riprap) for increased downslopes.

***Guidance for Bypassing Off-line Facilities*:**

Most biofiltration swales are currently designed to be on-line facilities. However, an off-line design is possible. Swales designed in an off-line mode should not engage a bypass until the flow rate exceeds a value determined by multiplying Q, the off-line water quality design flow rate predicted by the WWHM, by the ratio determined in Figure 9.4.6b. This modified design flow rate is an estimate of the design flow rate determined by using SBUH procedures. The only advantage of designing a swale to be off-line is that the stability check, which may make the swale larger, is not necessary.

Sizing Procedure for Biofiltration Swales

This guide provides biofilter swale design procedures in full detail, along with examples.

Preliminary Steps (P)

P-1 Determine the Water Quality design flow rate (Q) in 15-minute time-steps using the WWHM. Use the correct flow rate, off-line or on-line, for the design situation.

P-2 Establish the longitudinal slope of the proposed biofilter.

P-3 Select a vegetation cover suitable for the site. Refer to Tables 9.4.2, 9.4.3, and 9.4.4 (in text) to select vegetation for western Washington.

Design Calculations for Biofiltration Swale:

The procedure recommended here is an adaptation from the design procedure originate by Chow (Chow, 1959) for biofiltration applications in the Puget Sound region.

This procedure reverses Chow's order, designing first for capacity and then for stability. The capacity analysis emphasizes the promotion of biofiltration, rather than transporting flow with the greatest possible hydraulic efficiency. Therefore, it is based on criteria that promote sedimentation, filtration, and other pollutant removal mechanisms. Because these criteria include a lower maximum velocity than permitted for stability, the biofilter dimensions usually do not have to be modified after a stability check.

Design Steps (D):

D-1. Select the type of vegetation, and design depth of flow (based on frequency of mowing and type of vegetation). (Table 9.4.1)

D-2. Select a value of Manning's n (Table 9.4.1 with footnote #3).

Table 9.4.1 Sizing Criteria		
Design parameter	**BMP T 9.10-Biofiltration swale**	**BMP T 9.40-Filter strip**
Longitudinal Slope	0.015 - 0.025[1]	0.01 - 0.33
Maximum velocity	1 ft / sec (@ K multiplied by the WQ design flow rate ; for stability, 3 ft/sec max.	0.5 ft / sec @ K multiplied by the WQ design flow rate
Maximum water depth[2]	2"- if mowed frequently; 4" if mowed infrequently	1-inch max.
Manning coefficient (22)	(0.2 – 0.3)[3](0.24 if mowed infrequently)	0.35
Bed width (bottom)	(2 - 10 ft)[4]	---
Freeboard height	0.5 ft	---
Minimum hydraulic residence time at Water Quality Design Flow Rate	9 minutes (18 minutes for continuous inflow) (See Volume I, Appendix B)	9 minutes
Minimum length	100 ft	Sufficient to achieve hydraulic residence time in the filter strip
Maximum sideslope	3 H : 1 V 4H:1V preferred	Inlet edge ≥ 1" lower than contributing paved area
Max. tributary drainage flowpath	---	150 feet
Max. longitudinal slope of contributing area	---	0.05 (steeper than 0.05 need upslope flow spreading and energy dissipation)
Max. lateral slope of contributing area	---	0.02 (at the edge of the strip inlet)

1. For swales, if the slope is less than 1.5% install an underdrain using a perforated pipe, or equivalent. Amend the soil if necessary to allow effective percolation of water to the underdrain. Install the low-flow drain 6" deep in the soil. Slopes greater than 2.5% need check dams (riprap) at vertical drops of 12-15 inches. Underdrains can be made of 6 inch Schedule 40 PVC perforated pipe with 6" of drain gravel on the pipe. The gravel and pipe must be enclosed by geotextile fabric. (See Figures 9.4.2 and 9.4.3)

2. Below the design water depth install an erosion control blanket, at least 4" of topsoil, and the selected biofiltration mix. Above the water line use a straw mulch or sod.

3. This range of Manning's n can be used in the equation; b = Qn/1.49y(1.67) s(0.5) – Zy with wider bottom width b, and lower depth, y, at the same flow. This provides the designer with the option of varying the bottom width of the swale depending on space limitations. Designing at the higher n within this range at the same flow decreases the hydraulic design depth, thus placing the pollutants in closer contact with the vegetation and the soil.

4. For swale widths up to 16 feet the cross-section can be divided with a berm (concrete, plastic, compacted earthfill) using a flow spreader at the inlet (Figure 9.4.4)

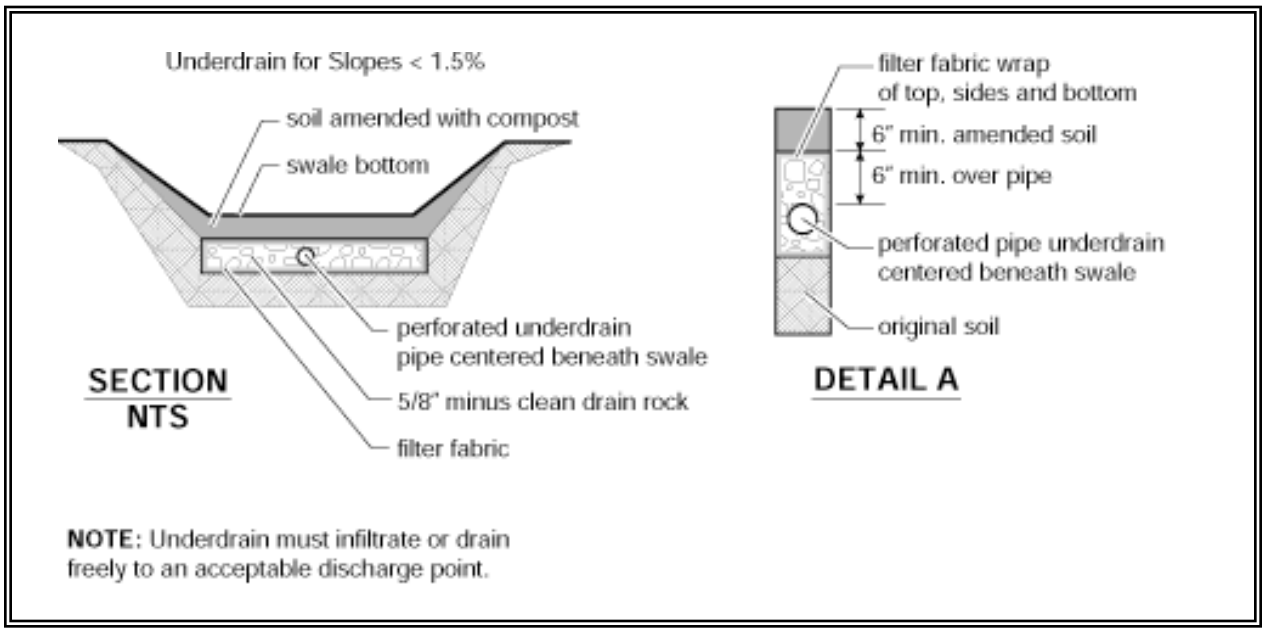

Figure 9.4.2 – Biofiltration Swale Underdrain Detail

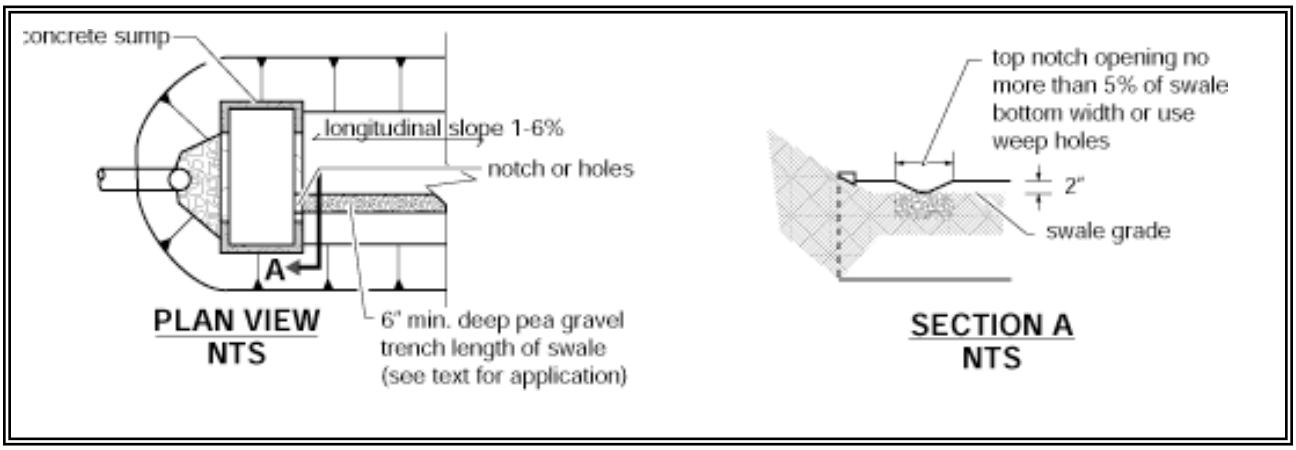

Figure 9.4.3 – Biofiltration Swale Low-Flow Drain Detail

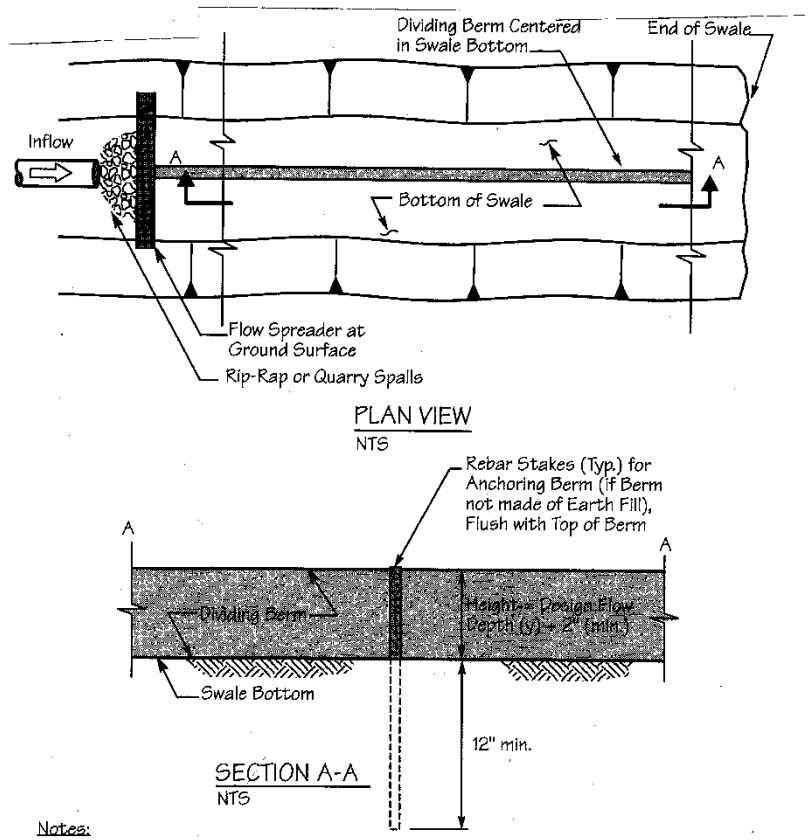

Notes:

1. Berm may be Made of Compacted Earthfill (seeded with grass), Timber, Concrete Plastic, or Similar Weather - Resistant Non - Erodible Material.
2. Rebar Stakes or Similar Berm Anchoring Materials Needed if Berm Made of Timber, Plastic, or Concrete Curbing - Stake Placement Required at Both Ends of Each Individual Member (at a minimum).

Figure 9.4.4 – Swale Dividing Berm

D-3. Select swale shape-typically trapezoidal or parabolic.

D-4. Use Manning's equation and first approximations relating hydraulic radius and dimensions for the selected swale shape to obtain a working value of a biofilter width dimension:

$$Q = \frac{1.49AR^{0.67}s^{0.5}}{n} \qquad (1)$$

$$A_{rectangle} = Ty \qquad (2)$$

$$R_{rectangle} = \frac{Ty}{T + 2y} \qquad (3)$$

Where:

Q = Water Quality Design flow rate in 15-minute time steps based on WWHM, (ft^3/s, cfs)
n = Manning's n (dimensionless)
s = Longitudinal slope as a ratio of vertical rise/horizontal run (dimensionless)
A = Cross-sectional area (ft^2)
R = Hydraulic radius (ft)
T = top width of trapezoid or width of a rectangle (ft)
y = depth of flow (ft)
b = bottom width of trapezoid (ft)

If equations 2 and 3 are substituted into equation 1 and solved for T, complex equations result that are difficult to solve manually. However, approximate solutions can be found by recognizing that T>>y and Z^2>>1, and that certain terms are nearly negligible. The approximation solutions for rectangular and trapezoidal shapes are:

$R_{rectangle} \approx y$, $R_{trapezoid} \approx y$, $R_{parabolic} \approx 0.67y$, $R_v \approx 0.5y$

Substitute $R_{trapezoid}$ and $A_{trapezoid} = by+Zy^2$ into Equation 1, and solve for the bottom width b (trapezoidal swale):

$$b \approx \frac{2.5Qn}{1.49y^{1.67}s^{0.5}} - Zy$$

For a trapezoid, select a side slope Z of at least 3. Compute b and then top width T, where T = b + 2yZ. *(Note: Adjustment factor of 2.5 accounts for the differential between Water Quality design flow rate and the SBUH design flow. This equation is used to estimate an initial cross-sectional area. It does not affect the overall biofiltration swale size.)*

If b for a swale is greater than 10 ft, either investigate how Q can be reduced, divide the flow by installing a low berm, or arbitrarily set b = 10 ft and continue with the analysis. For other swale shapes refer to Figure. 9.4.5.

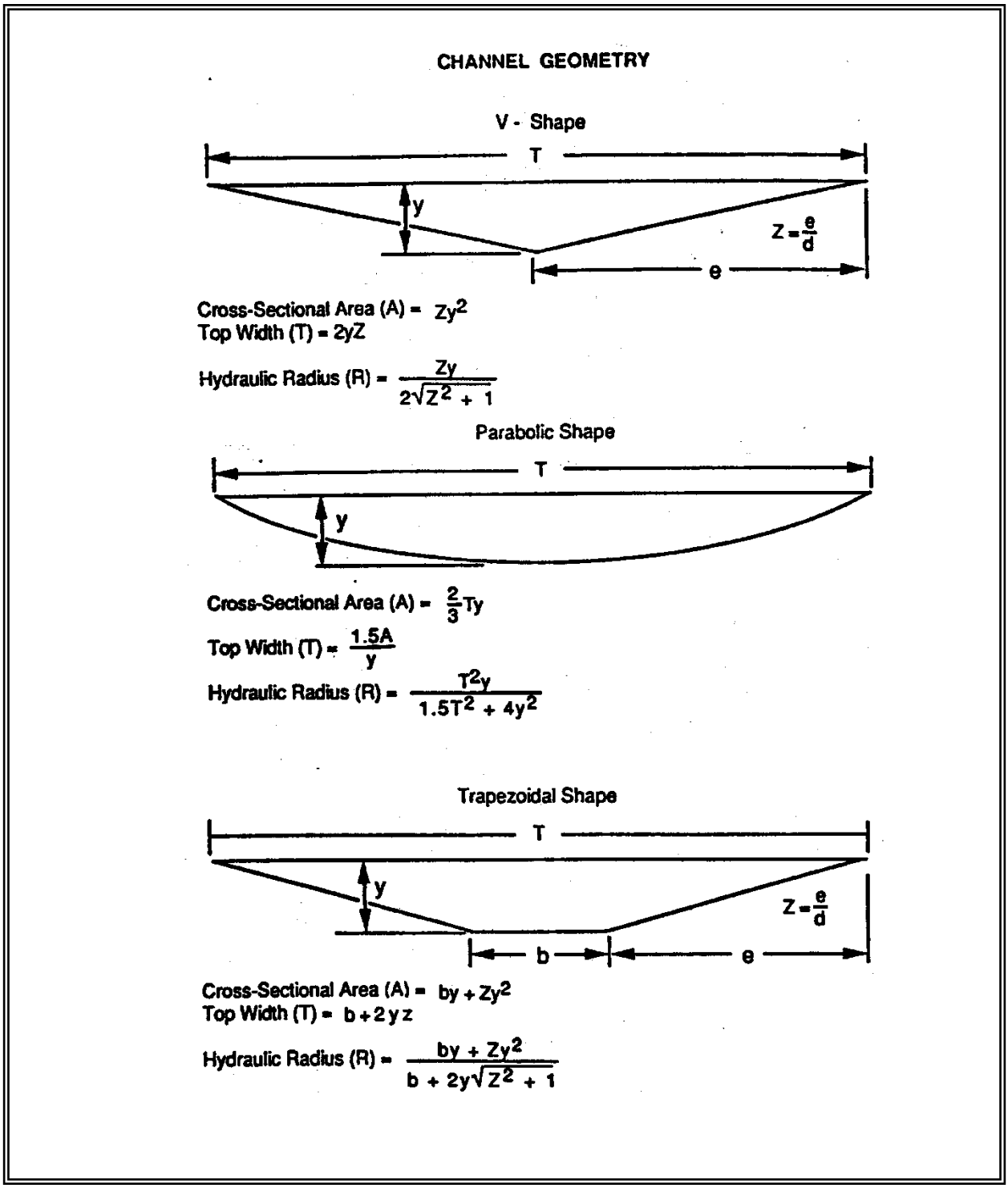

Figure 9.4.5 – Geometric Formulas for Common Swale Shapes

Source: Livingston, et al, 1984

D-5. Compute A:

$$A_{rectangle} = Ty \quad \text{or} \quad A_{trapazoid} = by + Zy^2$$

$$A_{filter\ strip} = Ty$$

D-6. Compute the flow velocity at design flow rate:

$$V = \kappa \frac{Q}{A}$$

K = A ratio of the peak ~~10-minute flow predicted~~volumetric flow rate calculated using a 10-minute time step by SBUH to the water quality design flow rate estimated using the WWHM. The value of K is determined from Figure 9.4.6a for on-line facilities, or Figure 9.4.6b for off-line facilities.

If V >1.0 ft/sec (or V>0.5 ft/sec for a filter strip), repeat steps D-1 to D-6 until the condition is met. A velocity greater than 1.0 ft/sec was found to flatten grasses, thus reducing filtration. A velocity lower than this maximum value will allow a 9-minute hydraulic residence time criterion in a shorter biofilter. If the value of V suggests that a longer biofilter will be needed than space permits, investigate how Q can be reduced (e.g., use of low impact development BMP's), or increase y and/or T (up to the allowable maximum values) and repeat the analysis.

D-7. Compute the swale length (L, ft)

L = Vt (60 sec/min)

Where: t = hydraulic residence time (min)

Use t = 9 minutes for this calculation (use t = 18 minutes for a continuous inflow biofiltration swale). If a biofilter length is greater than the space permits, follow the advice in step D-6.

If a length less than 100 feet results from this analysis, increase it to 100 feet, the minimum allowed. In this case, it may be possible to save some space in width and still meet all criteria. This possibility can be checked by computing V in the 100 ft biofilter for t = 9 minutes, recalculating A (if V < 1.0 ft/sec) and recalculating T.

D-8. If there is still not sufficient space for the biofilter, the local government and the project proponent should consider the following solutions (listed in order of preference):

1) Divide the site drainage to flow to multiple biofilters.
2) Use infiltration to provide lower discharge rates to the biofilter (only if the Site Suitability Criteria in Chapter 3, Volume III are met).
3) Increase vegetation height and design depth of flow (note: the design must ensure that vegetation remains standing during design flow).

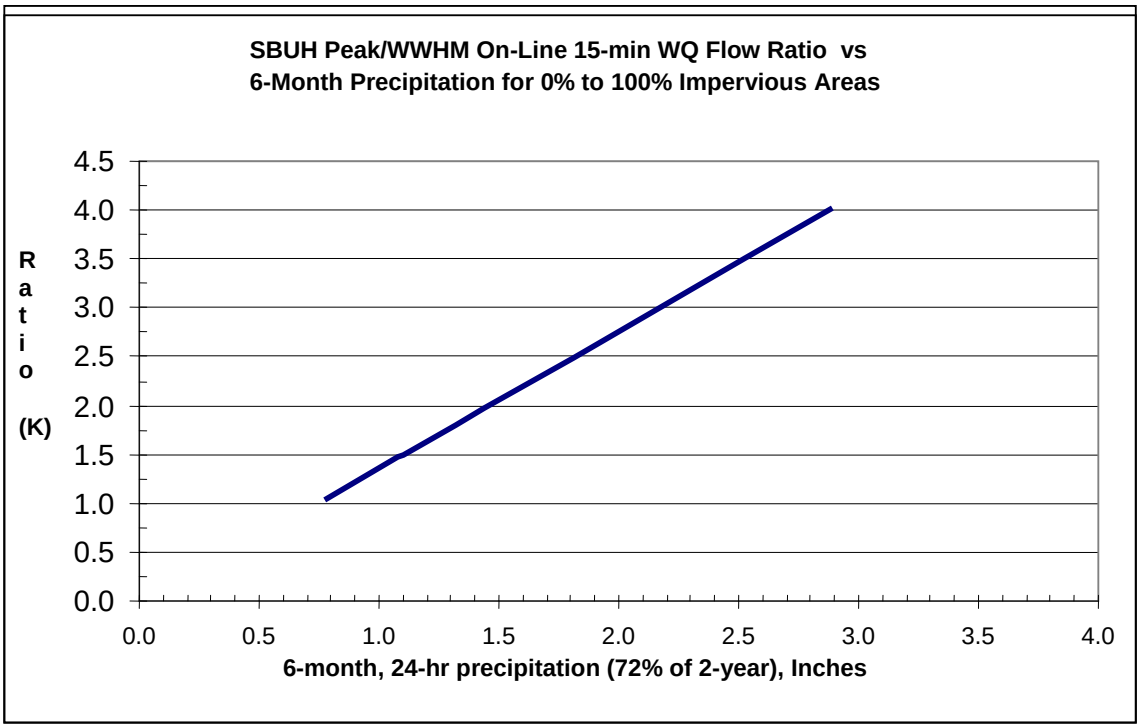

Figure 9.4.6a – Ratio of SBUH Peak/WQ Flow

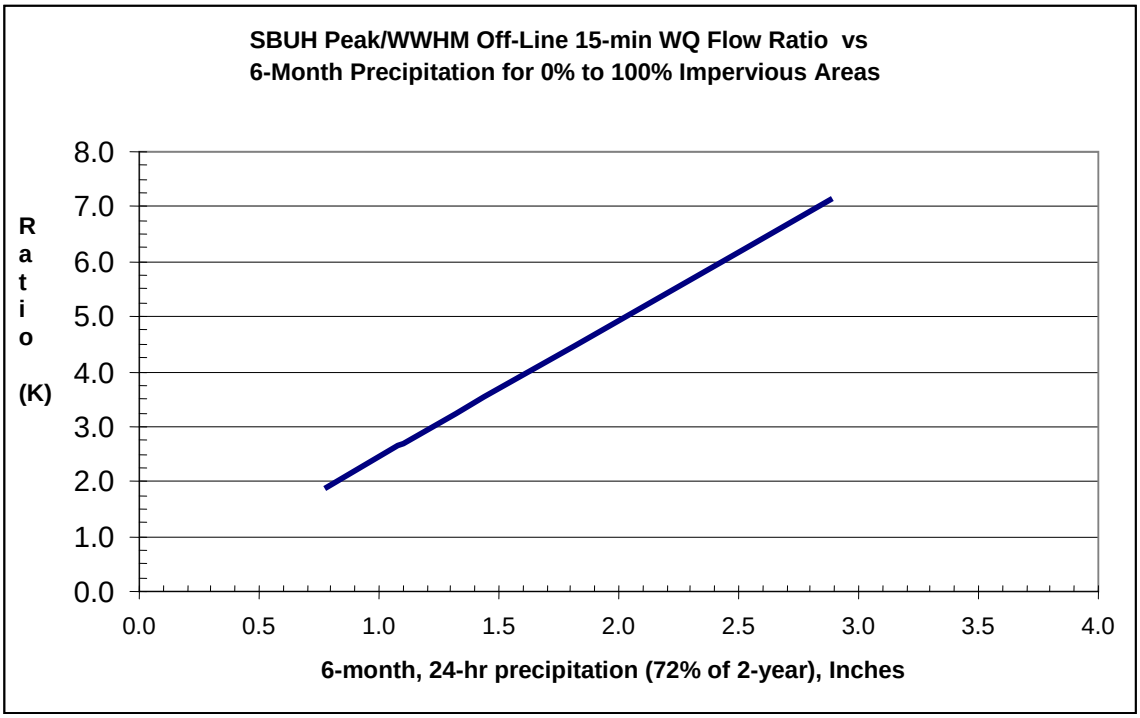

Figure 9.4.6b – Ratio of SBUH Peak/WQ Flow

4) Reduce the developed surface area to gain space for biofiltration.
5) Increase the longitudinal slope.

6) Increase the side slopes.

7) Nest the biofilter within or around another BMP.

Check for Stability (Minimizing Erosion)

The stability check must be performed for the combination of highest expected flow and least vegetation coverage and height. A check is not required for biofiltration swales that are located "off-line" from the primary conveyance/detention system, Maintain the same units as in the biofiltration capacity analysis.

SC-1. Perform the stability check for the 100-year, return frequency flow using 15-minute time steps using an approved continuous runoff model. Until WWHM peak flow rates in 15-minute time steps are available the designer can use the WWHM 100-yr. hourly peak flows times an adjustment factor of 1.6 to approximate peak flows in 15-minute time steps.

SC-2. Estimate the vegetation coverage ("good" or "fair") and height on the first occasion that the biofilter will receive flow, or whenever the coverage and height will be least. Avoid flow introduction during the vegetation establishment period by timing planting or bypassing.

SC-3. Estimate the degree of retardance from Table 9.4.2. When uncertain, be conservative by selecting a relatively low degree.

The maximum permissible velocity for erosion prevention (Vmax) is 3 feet per second.

Stability Check Steps (SC)

Table 9.4.2
Guide for Selecting Degree of Retardance [(a)]

Coverage	Average Grass Height (inches)	Degree of Retardance
Good	<2	E. Very Low
	2-6	D. Low
	6-10	C. Moderate
	11-24	B. High
	>30	A. Very High
Fair	<2	E. Very Low
	2-6	D. Low
	6-10	D. Low
	11-24	C. Moderate
	>30	B. High

See Chow (1959).. In addition, Chow recommended selection of retardance C for a grass-legume mixture 6-8 inches high and D for a mixture 4-5 inches high. No retardance recommendations have appeared for emergent wetland species. Therefore, judgment must be used. Since these species generally grow less densely than grasses, using a "fair" coverage would be a reasonable approach.

SC-4. Select a trial Manning's n for the high flow condition. The minimum value for poor vegetation cover and low height (possibly, knocked from the vertical by high flow) is 0.033. A good initial choice under these conditions is 0.04.

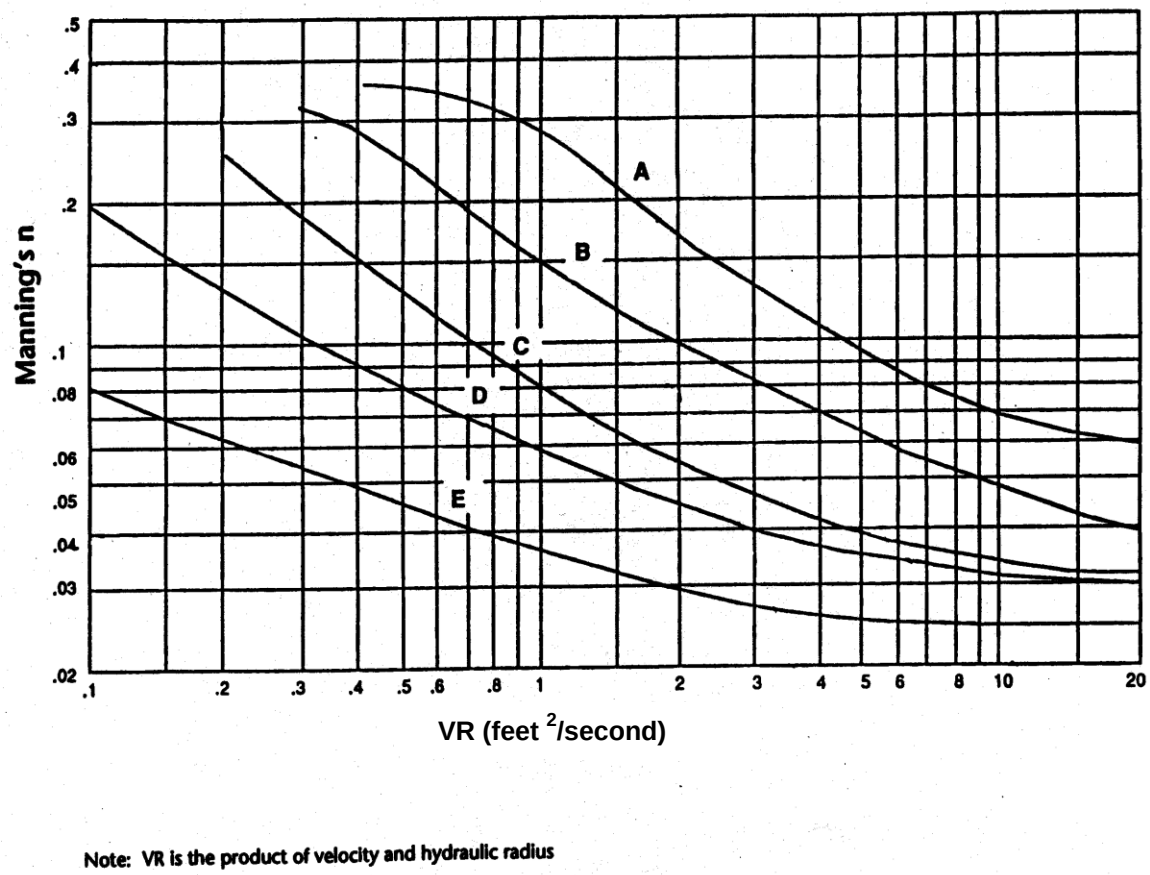

Source: Livingston, et al, 1984

Figure 9.4.7 – The Relationship of Manning's n with VR for Various Degrees of Flow Retardance (A-E)

SC-5. Refer to Figure 9.4.7 to obtain a first approximation for VR of 3 feet/second.

SC-6. Compute hydraulic radius, R, from VR in Figure 9.4.7 and a Vmax

SC-7. Use Manning's equation to solve for the actual VR.

SC-8. Compare the actual VR from step SC-7 and first approximation from step SC-5. If they do not agree within 5 percent, repeat steps SC-4 to SC-8 until acceptable agreement is reached. If n<0.033 is needed to get agreement, set n = 0.033, repeat step SC-7, and then proceed to step SC-9.

SC-9. Compute the actual V for the final design conditions:

Check to be sure $V < V_{max}$ of 3 feet/second.

SC-10. Compute the required swale cross-sectional area, A, for stability:

SC-11. Compare the A, computed in step SC-10 of the stability analysis, with the A from the biofiltration capacity analysis (step D-5).

If less area is required for stability than is provided for capacity, the capacity design is acceptable. If not, use A from step SC-10 of the stability analysis and recalculate channel dimensions.

SC-12. Calculate the depth of flow at the stability check design flow rate condition for the final dimensions and use A from step SC-10.

SC-13. Compare the depth from step SC-12 to the depth used in the biofiltration capacity design (Step D-1). Use the larger of the two and add 0.5 ft. of freeboard to obtain the total depth (y_t) of the swale. Calculate the top width for the full depth using the appropriate equation.

SC-14. Recalculate the hydraulic radius: (use b from Step D-4 calculated previously for biofiltration capacity, or Step SC-11, as appropriate, and y_t = total depth from Step SC-13)

SC-15. Make a final check for capacity based on the stability check design storm (this check will ensure that capacity is adequate if the largest expected event coincides with the greatest retardance). Use Equation 1, a Manning's n selected in step D-2, and the calculated channel dimensions, including freeboard, to compute the flow capacity of the channel under these conditions. Use R from step SC-14, above, and $A = b(y_t) + Z(y_t)^2$ using b from Step D-4, D-15, or SC-11 as appropriate.

If the flow capacity is less than the stability check design storm flow rate, increase the channel cross-sectional area as needed for this conveyance. Specify the new channel dimensions.

Completion Step (CO)

CO. Review all of the criteria and guidelines for biofilter planning, design, installation, and operation above and specify all of the appropriate features for the application.

Example of Design Calculations for Biofiltration Swales

Preliminary Steps

P-1. Assume that the WWHM based Water Quality Design Flow Rate in 15 minute time-steps, Q, is 0.2 cfs. Assume an on-line facility.

P-2. Assume the slope (s) is 2 percent.

P-3. Assume the vegetation will be a grass-legume mixture and it will be infrequently mowed.

Design for Biofiltration Swale Capacity

D-1. Set winter grass height at 5" and the design flow depth (y) at 3 inches.

D-2. Use n = 0.20 to n_2 = 0.30

D-3. Base the design on a trapezoidal shape, with a side slope Z = 3.

D-4a. Calculate the bottom width, b;

Where:

n = 0.20 y = 0.25 ft
Q = 0.2 cfs s = 0.02
Z = 3

$$b \approx \frac{2.5Qn}{1.49y^{1.67}s^{0.5}} - Zy$$

$b \approx 4.0$ ft

At n_2; b_2 = 6.5 feet

D-4b. Calculate the top width (T)

T = b + 2yZ = 4.0+ [2(0.25)(3)] = 5.5 feet

D-5. Calculate the cross-sectional area (A)

$A = by + Zy^2 = (4.0)(0.25) + (3)(0.25^2) = 1.19$ ft²

D-6. Calculate the flow velocity (V)

$$V = K\frac{Q}{A} = 0.17 \text{ ft / sec}$$

for K = 1. Actual K is determined per Figure 9.4.6a

0.17<1.0 ft/sec ∴ OK

D-7 Calculate the Length (L)

L = Vt(60 sec/min)

= 0.17 (9)(60)

For t = 9 min, L = 92 ft. at n; expand to a minimum of 100 foot length per design criterion

At n_2; L = 100 ft.

Note: Where b is less than the maximum value, it may be possible to reduce L by increasing b. In this case, because L is determined by the requirement for a minimum length of 100 feet, it is not possible.

Check for Channel Stability

SC-1. Base the check on passing the 100-year, return frequency flow (15 minute time steps) through a swale with a mixture of Kentucky bluegrass and tall fescue on loose erodible soil. Until WWHM peak flow rates in 15-minute time steps are available the designer can use the WWHM 100-yr. hourly peak flows times an adjustment factor of 1.6 to approximate peak flows in 15-minute time steps. Assume that the adjusted peak Q is 1.92 cfs.

SC-2. Base the check on a grass height of 3 inches with "fair" coverage (lowest mowed height and least cover, assuming flow bypasses or does not occur during grass establishment).

SC-3. From Table 9.4.2, Degree of Retardance = D (low)

Set V_{max} = 3 ft/sec

SC-4. Select trial Manning's n = 0.04

SC-5. From Figure 9.4.7, VR_{appx} = 3 ft²/s

SC-6. Calculate R

$$R = \frac{VR_{appx}}{V_{max}} = 1.0 \text{ ft}$$

SC-7. Calculate VR_{actual}

$$VR_{actual} = \frac{1.49}{n} R^{1.67} s^{0.5} = 5.25 \text{ ft}^2 / \text{sec}$$

SC-8. VR_{actual} from step SC-7 > VR_{appx} from step SC-5 by > 5%.

Select new trial n = 0.0475

Figure 9.4.7: VR_{appx} = 1.7 ft²/s

R = 0.57 ft.

VR_{actual} = 1.73 ft²/s (within 5% of VR_{appx} = 1.7)

SC-9. Calculate V

$$V = \frac{VR_{actual}}{R} = \frac{1.73}{0.57} = 3 \text{ ft / sec}$$

V = 3 ft/sec $\leq$ 3 ft/sec, Vmax $\therefore$ OK

SC-10. Calculate Stability Area

$$A_{Stability} = \frac{Q}{} = \frac{1.92}{3} = 0.64 \text{ ft}^2$$

SC-11. Stability Check

$A_{Stability}$ = 0.64 ft² is less than $A_{Capacity}$ from step D-5 ($A_{Capacity}$ = 1.19 ft^2). $\therefore$ OK

If $A_{Stability} > A_{Capacity}$, it will be necessary to select new trial sizes for width and flow depth (based on space and other considerations), recalculate $A_{Capacity}$, and repeat steps SC-10 and SC-11.

SC-12. Calculate depth of flow at the stability design flow rate condition using the quadratic equation solution:

$$y = \frac{-b \pm \sqrt{b^2 - 4Z(-A)}}{2Z}$$

For b = 4, y = 0.14 ft (positive root)

SC-13. Use the greater value of y from SC-12 or that assumed in D-1. In this case, the greater depth is 0.25-foot, which was the basis for the biofiltration capacity design. Add 0.5 feet freeboard to that depth.

Total channel depth = 0.75 ft

Top Width = b + 2yZ

= 4 + (2)(0.75)(3)

= 8.5 ft

SC-14. Recalculate hydraulic radius and flow rate

For b = 4 ft, y = 0.75 ft

Z = 3, s = 0.02, n = 0.2

A = by + Zy² = 4.68 ft²

R = {by + Zy²}/{b + 2y(Z² + 1)$^{0.5}$} = 0.53 ft.

SC-15. Calculate Flow Capacity at Greatest Resistance

$$Q = \frac{1.49AR^{0.67}s^{0.5}}{n} = 3.2 \text{ cfs}$$

Q = 3.2 cfs > 1.92 cfs $\therefore$ OK

Completion Step

CO-1. Assume 100 feet of swale length is available.

The final channel dimensions are:

Bottom width, b = 4 feet
Channel depth= 0.75 feet
Top width = b + 2yZ = 8.5 feet

No check dams are needed for a 2% slope.

Soil Criteria

- The following top soil mix at least 8-inch deep:
  - Sandy loam 60-90 %
  - Clay 0-10 %
  - Composted ~~organic~~ mat~~t~~erial, 10-30 % ~~(excluding animal waste, toxics)~~
- Use compost amended soil where ~~pra~~c~~ticable~~practicable. Composted material shall meet the specifications for compost used in the Bioretention Soil Media (BMP T7.30). This excludes use of biosolids and manures.
- Till to at least 8-inch depth
- For longitudinal slopes of < 2 percent use more sand to obtain more infiltration
- If ground water contamination is a concern, seal the bed with clay or a geomembrane liner

Vegetation Criteria

- See Tables 9.4.3, 9.4.4 and 9.4.5 for recommended grasses, wetland plants, and groundcovers.
- Select fine, turf-forming, water-resistant grasses where vegetative growth and moisture will be adequate for growth.
- Irrigate if moisture is insufficient during dry weather season.

- Use sod with low clay content and where needed to initiate adequate vegetative growth. Preferably sod should be laid to a minimum of one-foot vertical depth above the swale bottom.
- Consider sun/shade conditions for adequate vegetative growth and avoid prolonged shading of any portion not planted with shade tolerant vegetation.
- Stabilize soil areas upslope of the biofilter to prevent erosion
- Fertilizing a biofilter should be avoided if at all possible in any application where nutrient control is an objective. Test the soil for nitrogen, phosphorous, and potassium and consult with a landscape professional about the need for fertilizer in relation to soil nutrition and vegetation requirements. If use of a fertilizer cannot be avoided, use a slow-release fertilizer formulation in the least amount needed.

Recommended grasses (see Tables 9.4.3 and 9.4.4 below)

Table 9.4.3
Grass Seed Mixes Suitable for Biofiltration Swale Treatment Areas

Mix 1		Mix 2	
75-80 percent	tall or meadow fescue	60-70 percent	tall fescue
10-15 percent	seaside/colonial bentgrass	10-15 percent	seaside/colonial bentgrass
5-10 percent	Redtop	10-15 percent	meadow foxtail
		6-10 percent	alsike clover
		1-5 percent	marshfield big trefoil
		1-6 percent	Redtop

Note: *all percentages are by weight. * based on Briargreen, Inc.*

Table 9.4.4
Groundcovers And Grasses Suitable for the Upper Side Slopes of a Biofiltration Swale in Western Washington

Groundcovers	
kinnikinnick*	*Arctostaphylos uva-ursi*
Epimedium	*Epimedium grandiflorum*
creeping forget-me-not	*Omphalodes verna*
--	*Euonymus lanceolata*
yellow-root	*Xanthorhiza simplissima*
--	*Genista*
white lawn clover	*Trifolium repens*
*	
-------	*Rubus calycinoides*
strawberry*	*Fragaria chiloensis*
broadleaf lupine*	*Lupinus latifolius*

Grasses (drought-tolerant, minimum mowing)	
dwarf tall fescues	*Festuca* spp. (e.g., Many Mustang, Silverado)
hard fescue	*Festuca ovina duriuscula* (e.g., Reliant, Aurora)
tufted fescue	*Festuca amethystine*
buffalo grass	*Buchloe dactyloides*
red fescue*	*Festuca rubra*
tall fescue grass*	*Festuca arundinacea*
blue oatgrass	*Helictotrichon sempervirens*

Construction Criteria

The biofiltration swale should not be put into operation until areas of exposed soil in the contributing drainage catchment have been sufficiently stabilized. Deposition of eroded soils can impede the growth of grass in the swale and reduce swale treatment effectiveness. Thus, effective erosion and sediment control measures should remain in place until the swale vegetation is established (see Volume II for erosion and sediment control BMPs). Avoid compaction during construction. Grade biofilters to attain uniform longitudinal and lateral slopes.

Maintenance Criteria

- Inspect biofilters at least once every 6 months, preferably during storm events, and also after storm events of > 0.5 inch rainfall/ 24 hours. Maintain adequate grass growth and eliminate bare spots.
- Mow grasses, if needed for good growth {typically maintain at 4 – 9 inches and not below design flow level (King County, 1998)}.
- Remove sediment as needed at head of the swale if grass growth is inhibited in greater than 10 percent of the swale, or if the sediment is blocking the distribution and entry of the water (King County, 1998).
- Remove leaves, litter, and oily materials, and re-seed or resod, and regrade, as needed. Clean curb cuts and level spreaders as needed.

Prevent scouring and soil erosion in the biofilter. If flow channeling occurs, regrade and reseed the biofilter, as necessary.

Maintain access to biofilter inlet, outlet, and to mowing (Figure 9.4.8)

- If a swale is equipped with underdrains, vehicular traffic on the swale bottom (other than grass mowing equipment) should be avoided to prevent damage to the drainpipes.

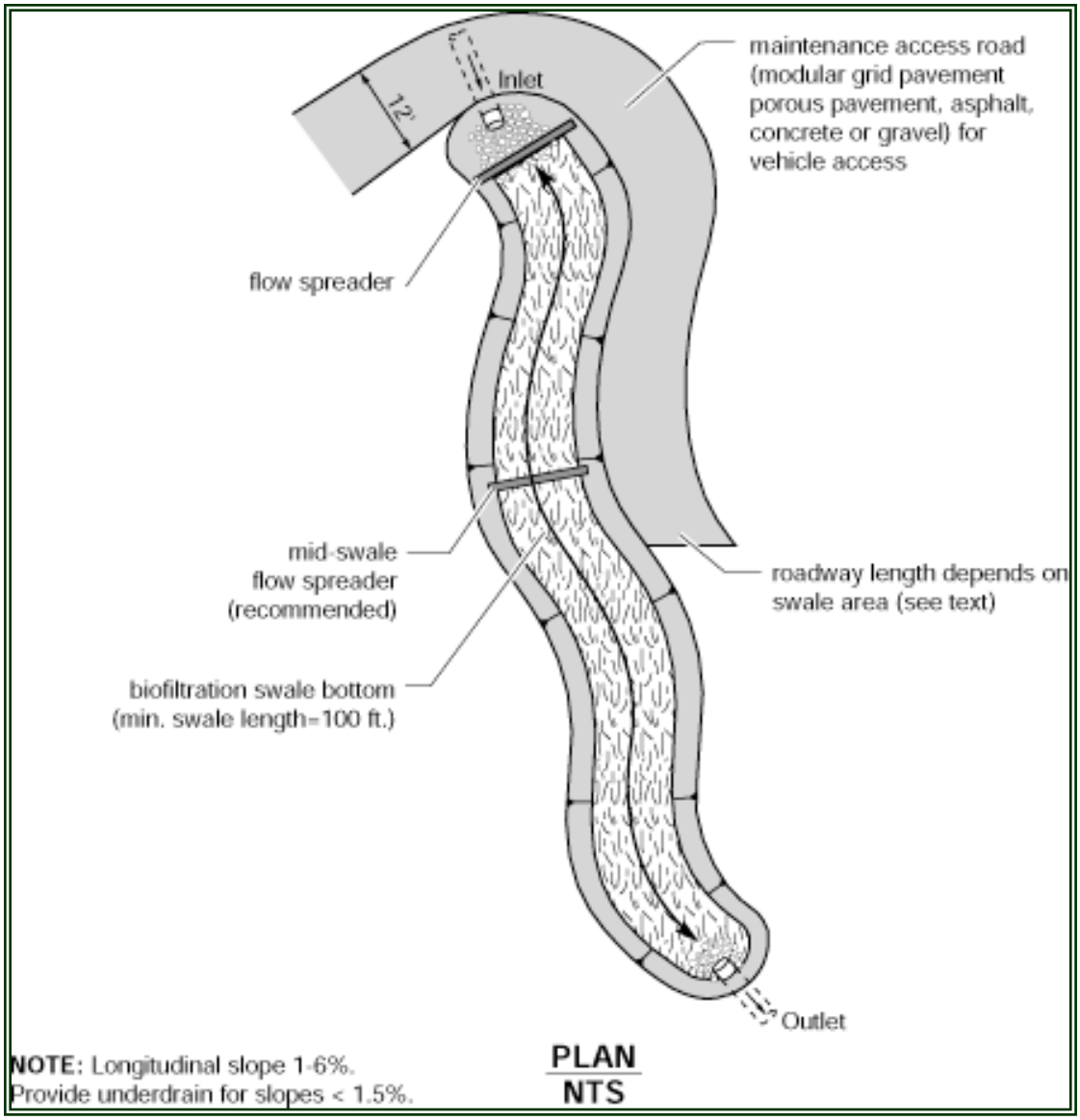

Figure 9.4.8 – Biofiltration Swale Access Features

BMP T9.20: Wet Biofiltration Swale

Description

A wet biofiltration swale is a variation of a basic biofiltration swale. Designers can use wet biofiltration swales when the longitudinal slope is slight, water tables are high, or a continuous low base flow is likely to result in saturated soil. Where saturation exceeds about 2 weeks, typical grasses will die. Thus, use vegetation specifically adapted to saturated soil conditions. Different vegetation in turn requires modification of several of the design parameters for the basic biofiltration swale.

Performance Objectives

To remove low concentrations of pollutants such as TSS, heavy metals, nutrients, and petroleum hydrocarbons.

Applications/ Limitations

Wet biofiltration swales are applied where a basic biofiltration swale is desired but not allowed or advisable because one or more of the following conditions exist:

- The swale is on till soils and is downstream of a detention pond providing flow control.
- Saturated soil conditions are likely because of seeps or base flows on the site.
- Longitudinal slopes are slight (generally less than 2 percent).

Design Criteria

Use the same design approach as for basic biofiltration swales except to add the following:

Adjust for extended wet season flow. If the swale will be downstream of a detention pond providing flow control, multiply the treatment area (bottom width times length) of the swale by 2, and readjust the swale length, if desired. Maintain a 5:1 length to width ratio.

Intent: An increase in the treatment area of swales following detention ponds is required because of the differences in vegetation established in a constant flow environment. Flows following detention are much more prolonged. These prolonged flows result in more stream-like conditions than are typical for other wet biofilter situations. Since vegetation growing in streams is often less dense, this increase in treatment area is needed to ensure that equivalent pollutant removal is achieved in extended flow situations.

Swale Geometry: Same as specified for basic biofiltration swales except for the following modifications:

Criterion 1: The bottom width may be increased to 25 feet maximum, but a minimum length-to-width ratio of 5:1 must be provided. No longitudinal dividing berm is needed. *Note: The minimum swale length is still 100 feet.*

Criterion 2: If longitudinal slopes are greater than 2 percent, the wet swale must be stepped so that the slope within the stepped sections averages 2 percent. Steps may be made of retaining walls, log check dams, or short riprap sections. **No underdrain or low-flow drain is required**.

High-Flow Bypass: A high-flow bypass (i.e., an off-line design) is required for flows greater than the off-line water quality design flow that has been increased by the ratio indicated in Figure 9.4.6b. The bypass is necessary to protect wetland vegetation from damage. Unlike grass, wetland vegetation will not quickly regain an upright attitude after being laid down by high flows. New growth, usually from the base of the plant, often taking several weeks, is required to regain its upright form. The bypass may be an open channel parallel to the wet biofiltration swale.

Water Depth and Base Flow: Same as for basic biofiltration swales except the design water depth shall be 4 inches for all wetland vegetation selections, and **no underdrains or low-flow drains are required**.

Flow Velocity, Energy Dissipation, and Flow Spreading: Same as for basic biofiltration swales except no flow spreader is needed.

Access: Same as for basic biofiltration swales except access is only required to the inflow and the outflow of the swale; access along the length of the swale is not required. Also, wheel strips may not be used for access in the swale.

Intent: An access road is not required along the length of a wet swale because of infrequent access needs. Frequent mowing or harvesting is not desirable. In addition, wetland plants are fairly resilient to sediment-induced changes in water depth, so the need for access should be infrequent.

Soil Amendment: Same as for basic biofiltration swales.

Planting Requirements: Same as for basic biofiltration swales except for the following modifications:

1. A list of acceptable plants and recommended spacing is shown in Table 9.4.5. In general, it is best to plant several species to increase the likelihood that at least some of the selected species will find growing conditions favorable.
2. A wetland seed mix may be applied by hydroseeding, but if coverage is poor, planting of rootstock or nursery stock is required. Poor coverage is considered to be more than 30 percent bare area through the upper 2/3 of the swale after four weeks.

Recommended Design Features: Same as for basic biofiltration swales

Construction Considerations: Same as for basic biofiltration swales

Maintenance Considerations: Same as for basic biofiltration swales except mowing of wetland vegetation is not required. However, harvesting of very dense vegetation may be desirable in the fall after plant die-back to prevent the sloughing of excess organic material into receiving waters. Many native *Juncus* species remain green throughout the winter; therefore, fall harvesting of *Juncus* species is not recommended.

Table 9.4.5
Recommended Plants for Wet Biofiltration Swale

Common Name	Scientific Name	Spacing (on center)
Shortawn foxtail	*Alopecurus aequalis*	seed
Water foxtail	*Alopecurus geniculatus*	seed
Spike rush	*Eleocharis spp.*	4 inches
Slough sedge*	*Carex obnupta*	6 inches or seed
Sawbeak sedge	*Carex stipata*	6 inches
Sedge	*Carex* spp.	6 inches
Western mannagrass	*Glyceria occidentalis*	seed
Velvetgrass	*Holcus mollis*	seed
Slender rush	*Juncus tenuis*	6 inches
Watercress*	*Rorippa nasturtium-aquaticum*	12 inches
Water parsley*	*Oenanthe sarmentosa*	6 inches
Hardstem bulrush	*Scirpus acutus*	6 inches
Small-fruited bulrush	*Scirpus microcarpus*	12 inches

** Good choices for swales with significant periods of flow, such as those downstream of a detention facility.*

Note: Cattail (Typha latifolia) is not appropriate for most wet swales because of its very dense and clumping growth habit which prevents water from filtering through the clump.

BMP T9.30: Continuous Inflow Biofiltration Swale

Description

In situations where water enters a biofiltration swale continuously along the side slope rather than discretely at the head, a different design approach–the continuous inflow biofiltration swale–is needed. The basic swale design is modified by increasing swale length to achieve an equivalent average residence time.

Applications

A continuous inflow biofiltration swale is to be **used when inflows are not concentrated**, such as locations along the shoulder of a road without curbs. This design may also be **used where frequent, small point flows enter a swale**, such as through curb inlet ports spaced at intervals along a road, or from a parking lot with frequent curb cuts. In general, no inlet port should carry more than about 10 percent of the flow.

A continuous inflow swale is not appropriate for a situation in which significant lateral flows enter a swale at some point downstream from the head of the swale. In this situation, the swale width and length must be recalculated from the point of confluence to the discharge point in order to provide adequate treatment for the increased flows.

Design Criteria

Same as specified for **basic biofiltration swale** except for the following:

- The design flow for continuous inflow swales must include runoff from the pervious side slopes draining to the swale along the entire swale length. Therefore, they must be on-line facilities.
- If only a single design flow is used, the flow rate at the outlet should be used. The goal is to achieve an average residence time through the swale of 9 minutes as calculated using the on-line water quality design flow rate multiplied by the ratio, K, in Figure 9.4.6a. Assuming an even distribution of inflow into the side of the swale double the hydraulic residence time to a minimum of 18 minutes.
- For continuous inflow biofiltration swales, interior side slopes above the WQ design treatment elevation shall be planted in grass. A typical lawn seed mix or the biofiltration seed mixes are acceptable. Landscape plants or groundcovers other than grass may not be used anywhere between the runoff inflow elevation and the bottom of the swale. **Intent:** The use of grass on interior side slopes reduces the chance of soil erosion and transfer of pollutants from landscape areas to the biofiltration treatment area.

BMP T9.40: Basic Filter Strip

Description

A basic filter strip is flat with no side slopes (Figure 9.4.9). Contaminated stormwater is distributed as sheet flow across the inlet width of a biofilter strip. Treatment is by passage of water over the surface, and through grass.

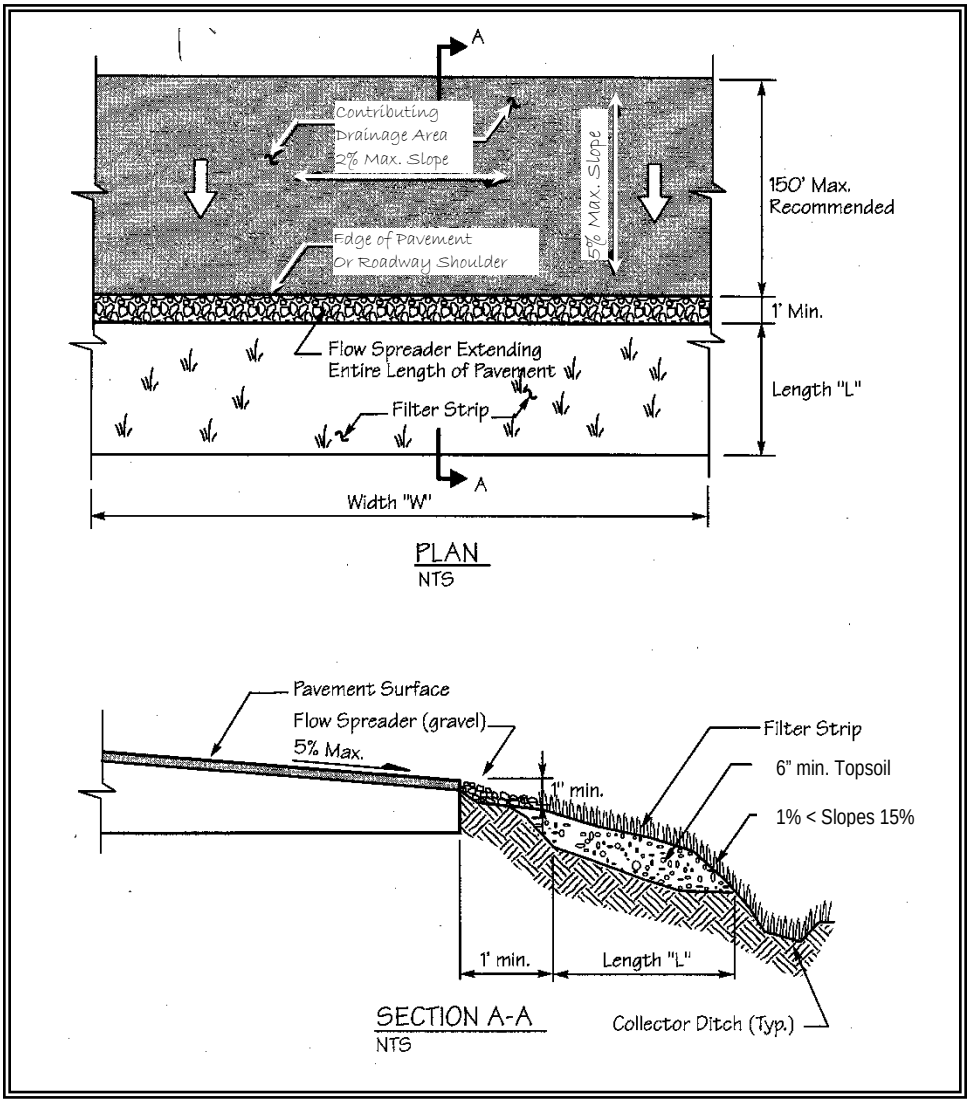

Figure 9.4.9 – Typical Filter Strip

Applications and Limitations

The basic filter strip is typically used on-line and adjacent and parallel to a paved area such as parking lots, driveways, and roadways.

Design Criteria for Filter strips:

- Use the Design Criteria specified in Table 9.4.1.
- Filter strips should only receive sheet flow.
- Use curb cuts ≥ 12-inch wide and 1-inch above the filter strip inlet.

Calculate the design flow depth using Manning's equation as follows:

$$KQ = (1.49A\ R^{0.67}\ s^{0.5})/n$$

Substituting for AR:

$$KQ = (1.49Ty^{1.67}\ s^{0.5})/n$$

Where:

$Ty = A_{rectangle,\ ft}{}^2$
$y \approx R_{rectangle}$, design depth of flow, ft. (1 inch maximum)
Q = peak Water Quality design flow rate based on WWHM, ft^3/sec (See Appendix I-B, Volume I)
K = The ratio determined by using Figure 9.4.6a
n = Manning's roughness coefficient
s = Longitudinal slope of filter strip parallel to direction of flow
T = Width of filter strip perpendicular to the direction of flow, ft.
A = Filter strip inlet cross-sectional flow area (rectangular), ft^2
R = hydraulic radius, ft.

Rearranging for y:

$$y = [KQn/1.49Ts^{0.5}]^{0.6}$$

y must not exceed 1 inch

Note: As in swale design an adjustment factor of K accounts for the differential between the WWHM Water Quality design flow rate and the SBUH design flow

Calculate the design flow velocity V, ft./sec., through the filter strip:

$$V = KQ/Ty$$

V must not exceed 0.5 ft./sec

Calculate required length, ft., of the filter strip at the minimum hydraulic residence time, t, of 9 minutes:

$$\mathbf{L = tV = 540V}$$

Chapter 10. - Wetpool Facilities

Note: Figures in Chapter 10 are from the King County Surface Water Design Manual

10.1 Purpose

This Chapter presents the methods, criteria, and details for analysis and design of wetponds, wetvaults, and stormwater wetlands. These facilities have as a common element a permanent pool of water - the wetpool. Each of the wetpool facilities can be combined with a detention or flow control pond in a combined facility.

10.2 Application

The wetpool facility designs described for the four BMPs in this Chapter will achieve the performance objectives cited in Chapter 3 for specific treatment menus.

10.3 Best Management Practices (BMPs) for Wetpool Facilities

The four BMPs discussed below are currently recognized as effective treatment techniques using wetpool facilities. The specific BMPs that are selected should be coordinated with the Treatment Facility Menus discussed in Chapter 3.

BMP T10.10: Wetponds - Basic and Large

Purpose and Definition

A wetpond is a constructed stormwater pond that retains a permanent pool of water ("wetpool") at least during the wet season. The volume of the wetpool is related to the effectiveness of the pond in settling particulate pollutants. As an option, a shallow marsh area can be created within the permanent pool volume to provide additional treatment for nutrient removal. Peak flow control can be provided in the "live storage" area above the permanent pool. Figures 10.31a and 10.3.1b illustrates a typical wet pond BMP.

The following design, construction, and operation and maintenance criteria cover two wetpond applications - the basic wetpond and the large wetpond. Large wetponds are designed for higher levels of pollutant removal.

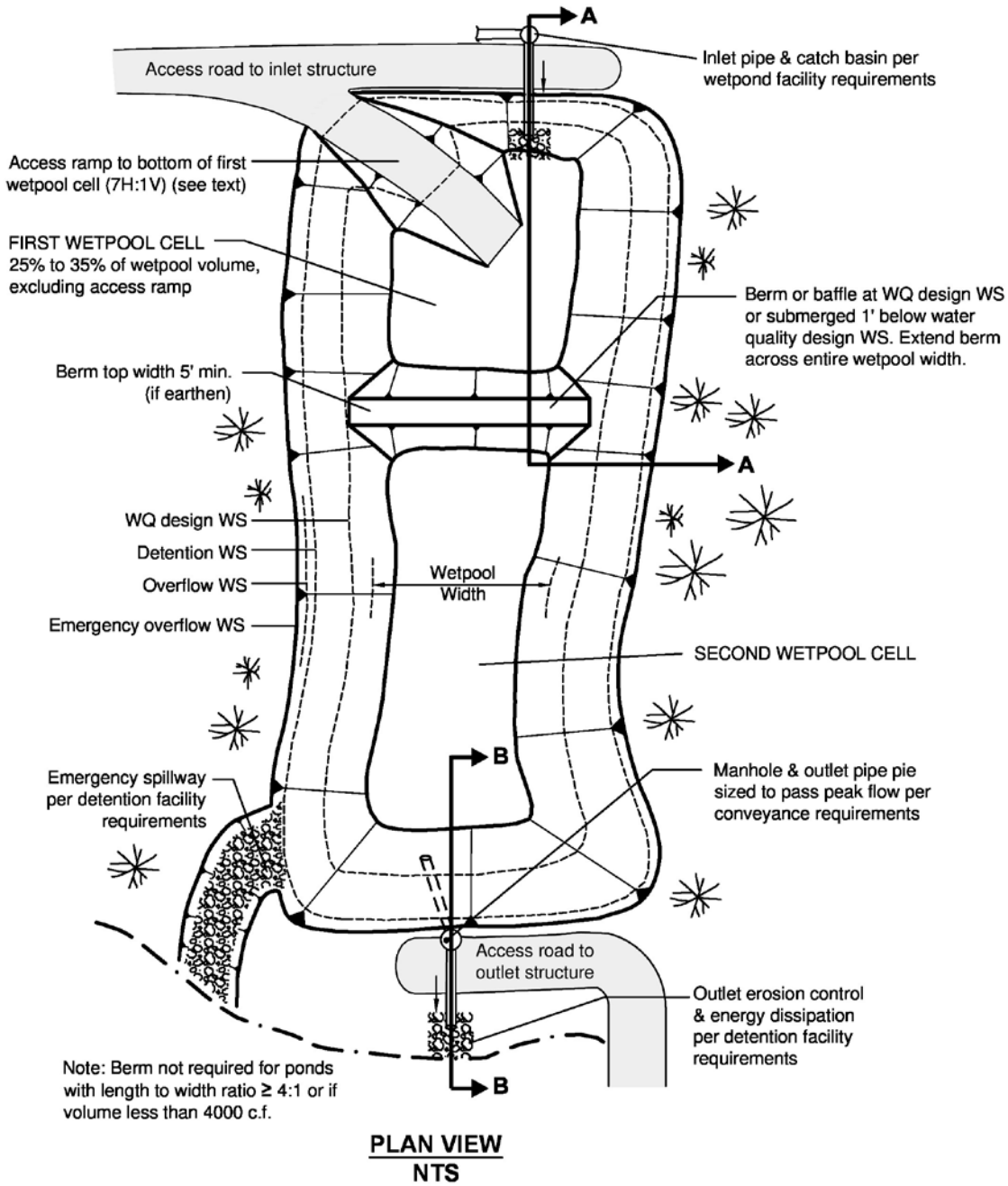

Figure 10.3.1a – Wetpond

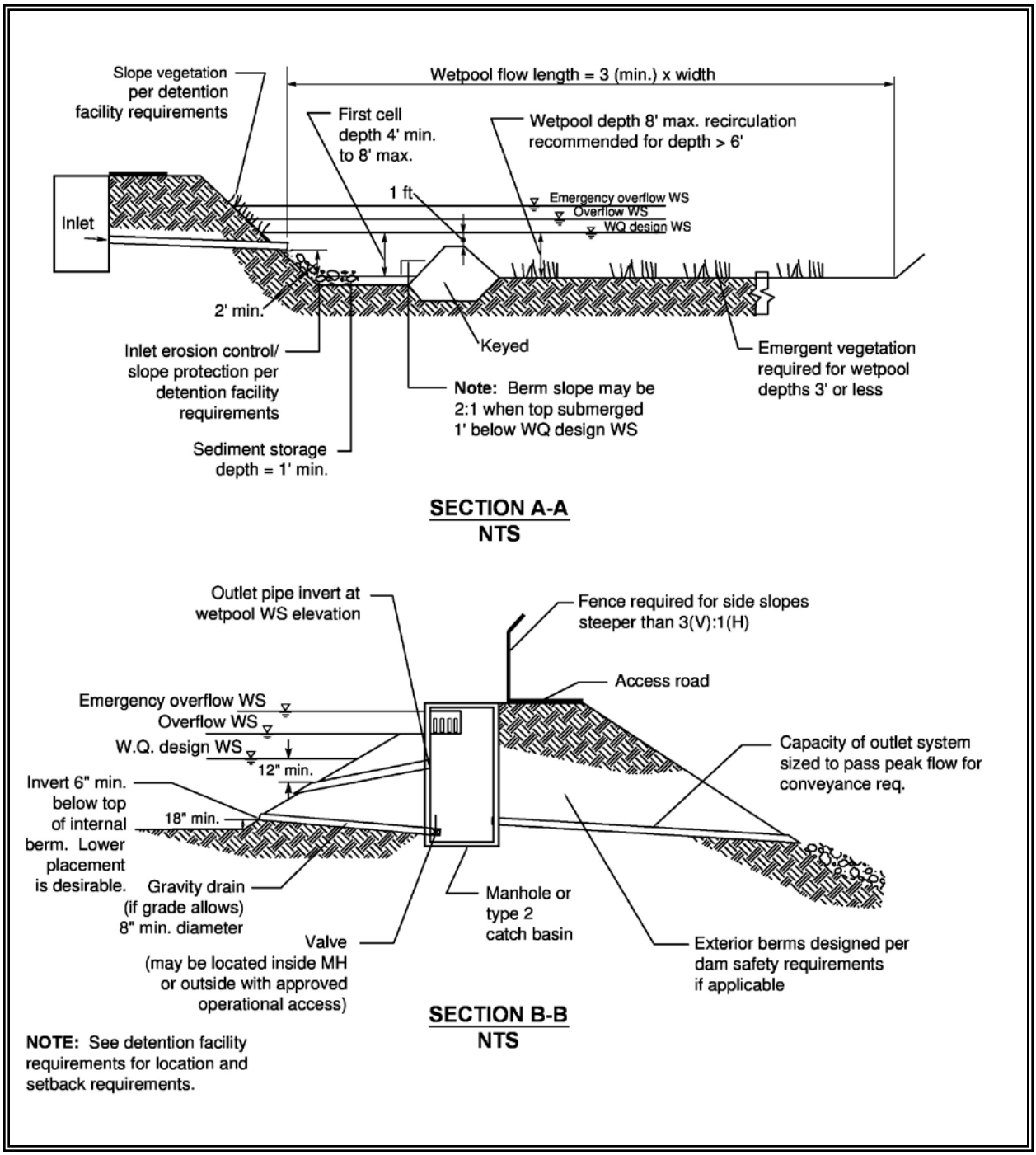

Figure 10.3.1b – Wetpond

Applications and Limitations

A wetpond requires a larger area than a biofiltration swale or a sand filter, but it can be integrated to the contours of a site fairly easily. In till soils, the wetpond holds a permanent pool of water that provides an attractive aesthetic feature. In more porous soils, wetponds may still be used, but water seepage from unlined cells could result in a dry pond, particularly in the summer months. Lining the first cell with a low permeability liner is one way to deal with this situation. As long as the

first cell retains a permanent pool of water, this situation will not reduce the pond's effectiveness but may be an aesthetic drawback.

Wetponds work best when the water already in the pond is moved out en masse by incoming flows, a phenomenon called "plug flow." Because treatment works on this displacement principle, the wetpool storage of wetponds may be provided below the ground water level without interfering unduly with treatment effectiveness. However, if combined with a detention function, the live storage must be above the seasonal high ground water level.

Wetponds may be single-purpose facilities, providing only runoff treatment, or they may be combined with a detention pond to also provide flow control. If combined, the wetpond can often be stacked under the detention pond with little further loss of development area. See BMP T10.40 for a description of combined detention and wetpool facilities.

Design Criteria

The primary design factor that determines a wetpond's treatment efficiency is the volume of the wetpool. The larger the wetpool volume, the greater the potential for pollutant removal. For a basic wetpond, the wetpool volume provided shall be equal to or greater than the total volume of runoff from the water quality design storm - the 6-month, 24-hour storm event. **Alternatively, use an approved continuous runoff model to give you the Water Quality Design Storm Volume. This volume is equal to the simulated daily volume that represents the upper limit of the range of daily volumes that accounts for 91% of the entire runoff volume over a multi-decade period of record. The WWHM and MGS Flood identify this volume for you.**

A large wetpond requires a wetpool volume at least 1.5 times larger than the Water Quality Design Storm Volume. Also important are the avoidance of short-circuiting and the promotion of plug flow. ***Plug flow*** describes the hypothetical condition of stormwater moving through the pond as a unit, displacing the "old" water in the pond with incoming flows. To prevent short-circuiting, water is forced to flow, to the extent practical, to all potentially available flow routes, avoiding "dead zones" and maximizing the time water stays in the pond during the active part of a storm.

Design features that encourage plug flow and avoid dead zones are:

- Dissipating energy at the inlet.
- Providing a large length-to-width ratio.
- Providing a broad surface for water exchange using a berm designed as a broad-crested weir to divide the wetpond into two cells rather than a constricted area such as a pipe.
- Maximizing the flowpath between inlet and outlet, including the vertical path, also enhances treatment by increasing residence time.

Sizing Procedure

Procedures for determining a wetpond's dimensions and volume are outlined below.

Step 1: Identify required wetpool volume using: a) the SCS (now known as NRCS) curve number equations presented in Volume III, Chapter 2, Section 2.3.2, or b) an approved continuous runoff. A basic wetpond requires a volume equal to or greater than the total volume of runoff from the 6-month, 24-hour storm event. Alternatively, use the Water Quality Design Storm Volume indicated by an approved continuous runoff model. A large wetpond requires a volume at least 1.5 times the total volume of runoff from the 6-month, 24-hour storm event, or 1.5 times the Water Quality Design Storm Volume identified by an approved continuous runoff model.

Step 2: Determine wetpool dimensions. Determine the wetpool dimensions satisfying the design criteria outlined below and illustrated in Figures 10.3.1a and 10.3.1b. A simple way to check the volume of each wetpool cell is to use the following equation:

$$V = \frac{h(A_1 + A_2)}{2}$$

where V = wetpool volume (cf)
h = wetpool average depth (ft)
A_1 = water quality design surface area of wetpool (sf)
A_2 = bottom area of wetpool (sf)

Step 3: Design pond outlet pipe and determine primary overflow water surface. The pond outlet pipe shall be placed on a reverse grade from the pond's wetpool to the outlet structure. Use the following procedure to design the pond outlet pipe and determine the primary overflow water surface elevation:

a) Use the nomographs in Figures 10.3.2 and 10.3.3 to select a trial size for the pond outlet pipe sufficient to pass the on-line WQ design flow, Q_{wq} indicated by WWHM or other approved continuous runoff model.
b) Use Figure 10.3.4 to determine the critical depth d_c at the outflow end of the pipe for Q_{wq}.
c) Use Figure 10.3.5 to determine the flow area A_c at critical depth.
d) Calculate the flow velocity at critical depth using continuity equation ($V_c = Q_{wq} / A_c$).
e) Calculate the velocity head V_H ($V_H = V_c^2 / 2g$, where g is the gravitational constant, 32.2 feet per second).
f) Determine the primary overflow water surface elevation by adding the velocity head and critical depth to the invert elevation at the outflow end of the pond outlet pipe (i.e., overflow water surface elevation = outflow invert + d_c + V_H).

g) Adjust outlet pipe diameter as needed and repeat Steps (a) through (e).

Step 4: Determine wetpond dimensions. General wetpond design criteria and concepts are shown in Figure 10.3.1a and 10.3.1b.

Wetpool Geometry

- The wetpool shall be divided into two cells separated by a baffle or berm. The first cell shall contain between 25 to 35 percent of the total wetpool volume. The baffle or berm volume shall not count as part of the total wetpool volume. The term baffle means a vertical divider placed across the entire width of the pond, stopping short of the bottom. A berm is a vertical divider typically built up from the bottom, or if in a vault, connects all the way to the bottom.

Intent: The full-length berm or baffle promotes plug flow and enhances quiescence and laminar flow through as much of the entire water volume as possible. Alternative methods to the full-length berm or baffle that provide equivalent flow characteristics may be approved on a case-by-case basis by the Local Plan Approval Authority.

- Sediment storage shall be provided in the first cell. The sediment storage shall have a minimum depth of 1-foot. A fixed sediment depth monitor should be installed in the first cell to gauge sediment accumulation unless an alternative gauging method is proposed.
- The minimum depth of the first cell shall be 4 feet, exclusive of sediment storage requirements. The depth of the first cell may be greater than the depth of the second cell.
- The maximum depth of each cell shall not exceed 8 feet (exclusive of sediment storage in the first cell). Pool depths of 3 feet or shallower (second cell) shall be planted with emergent wetland vegetation (see Planting requirements).
- Inlets and outlets shall be placed to maximize the flowpath through the facility. The ratio of flowpath length to width from the inlet to the outlet shall be at least 3:1. The ***flowpath length*** is defined as the distance from the inlet to the outlet, as measured at mid-depth. The ***width*** at mid-depth can be found as follows: width = (average top width + average bottom width)/2.
- Wetponds with wetpool volumes less than or equal to 4,000 cubic feet may be single celled (i.e., no baffle or berm is required). However, it is especially important in this case that the flow path length be maximized. The ratio of flow path length to width shall be at least 4:1 in single celled wetponds, but should preferably be 5:1.
- All inlets shall enter the first cell. If there are multiple inlets, the length-to-width ratio shall be based on the average flowpath length for all inlets.

- The first cell must be lined in accordance with the liner requirements contained in Section 4.4.

Berms, Baffles, and Slopes

- A berm or baffle shall extend across the full width of the wetpool, and tie into the wetpond side slopes. If the berm embankments are greater than 4 feet in height, the berm must be constructed by excavating a key equal to 50 percent of the embankment cross-sectional height and width. This requirement may be waived if recommended by a geotechnical engineer for specific site conditions. The geotechnical analysis shall address situations in which one of the two cells is empty while the other remains full of water.
- The top of the berm may extend to the WQ design water surface or be 1-foot below the WQ design water surface. If at the WQ design water surface, berm side slopes should be 3H:1V. Berm side slopes may be steeper (up to 2:1) if the berm is submerged 1-foot.

  Intent: Submerging the berm is intended to enhance safety by discouraging pedestrian access when side slopes are steeper than 3H:1V. An alternative to the submerged berm design is the use of barrier planting to prevent easy access to the divider berm in an unfenced wetpond.
- If good vegetation cover is not established on the berm, erosion control measures should be used to prevent erosion of the berm back-slope when the pond is initially filled.
- The interior berm or baffle may be a retaining wall provided that the design is prepared and stamped by a licensed civil engineer. If a baffle or retaining wall is used, it should be submerged one foot below the design water surface to discourage access by pedestrians.
- Criteria for wetpond side slopes are included in Section 4.3.

Embankments

Embankments that impound water must comply with the Washington State Dam Safety Regulations (Chapter 173-175 WAC). If the impoundment has a storage capacity (including both water and sediment storage volumes) greater than 10 acre-feet (435,600 cubic feet or 3.26 million gallons) above natural ground level, then dam safety design and review are required by the Department of Ecology. See Section 3.2.1 of Volume III.

Inlet and Outlet

See Figure 10.3.1a and 10.3.1b for details on the following requirements:

- The inlet to the wetpond shall be submerged with the inlet pipe invert a minimum of two feet from the pond bottom (not including sediment

storage). The top of the inlet pipe should be submerged at least 1-foot, if possible.

Intent: The inlet is submerged to dissipate energy of the incoming flow. The distance from the bottom is set to minimize resuspension of settled sediments. Alternative inlet designs that accomplish these objectives are acceptable.

- An outlet structure shall be provided. Either a Type 2 catch basin with a grated opening (jail house window) or a manhole with a cone grate (birdcage) may be used (see Volume III, Figure 3.2.3 for an illustration). No sump is required in the outlet structure for wetponds not providing detention storage. The outlet structure receives flow from the pond outlet pipe. The grate or birdcage openings provide an overflow route should the pond outlet pipe become clogged. The overflow criteria provided below specifies the sizing and position of the grate opening.
- The pond outlet pipe (as opposed to the manhole or type 2 catch basin outlet pipe) shall be back-sloped or have a turn-down elbow, and extend 1 foot below the WQ design water surface. Note: A floating outlet, set to draw water from 1-foot below the water surface, is also acceptable if vandalism concerns are adequately addressed.

  Intent: The inverted outlet pipe provides for trapping of oils and floatables in the wetpond.
- The pond outlet pipe shall be sized, at a minimum, to pass the on-line WQ design flow. Note: The highest invert of the outlet pipe sets the WQ design water surface elevation.
- The overflow criteria for single-purpose (treatment only, not combined with flow control) wetponds are as follows:

  a) The requirement for primary overflow is satisfied by either the grated inlet to the outlet structure or by a birdcage above the pond outlet structure.

  b) The bottom of the grate opening in the outlet structure shall be set at or above the height needed to pass the WQ design flow through the pond outlet pipe. *Note: The grate invert elevation sets the overflow water surface elevation.*

  c) The grated opening should be sized to pass the 100-year design flow. The capacity of the outlet system should be sized to pass the peak flow for the conveyance requirements.
- An emergency spillway shall be provided and designed according to the requirements for detention ponds (see Section 3.2.1 of Volume III).
- The Local Plan Approval Authority may require a bypass/ shutoff valve to enable the pond to be taken offline for maintenance purposes.

- A gravity drain for maintenance is recommended if grade allows.

  Intent: It is anticipated that sediment removal will only be needed for the first cell in the majority of cases. The gravity drain is intended to allow water from the first cell to be drained to the second cell when the first cell is pumped dry for cleaning.

- The drain invert shall be at least 6 inches below the top elevation of the dividing berm or baffle. Deeper drains are encouraged where feasible, but must be no deeper than 18 inches above the pond bottom.

  Intent: To prevent highly sediment-laden water from escaping the pond when drained for maintenance.

- The drain shall be at least 8 inches (minimum) diameter and shall be controlled by a valve. Use of a shear gate is allowed only at the inlet end of a pipe located within an approved structure.

  Intent: Shear gates often leak if water pressure pushes on the side of the gate opposite the seal. The gate should be situated so that water pressure pushes toward the seal.

- Operational access to the valve shall be provided to the finished ground surface.
- The valve location shall be accessible and well-marked with 1-foot of paving placed around the box. It must also be protected from damage and unauthorized operation.
- A valve box is allowed to a maximum depth of 5 feet without an access manhole. If over 5 feet deep, an access manhole or vault is required.
- All metal parts shall be corrosion-resistant. Galvanized materials should not be used unless unavoidable.

  Intent: Galvanized metal contributes zinc to stormwater, sometimes in very high concentrations.

Access and Setbacks

- All facilities shall be a minimum of 20 feet from any structure, property line, and any vegetative buffer required by the local government, and 100 feet from any septic tank/drainfield.
- All facilities shall be a minimum of 50 feet from any steep (greater than 15 percent) slope. A geotechnical report must address the potential impact of a wet pond on a steep slope.
- Access and maintenance roads shall be provided and designed according to the requirements for detention ponds. Access and maintenance roads shall extend to both the wetpond inlet and outlet structures. An access ramp (7H minimum:1V) shall be provided to the

bottom of the first cell unless all portions of the cell can be reached and sediment loaded from the top of the pond.

- If the dividing berm is also used for access, it should be built to sustain loads of up to 80,000 pounds.

Planting Requirements

Planting requirements for detention ponds also apply to wetponds.

- Large wetponds intended for phosphorus control should not be planted within the cells, as the plants will release phosphorus in the winter when they die off.
- If the second cell of a basic wetpond is 3 feet or shallower, the bottom area shall be planted with emergent wetland vegetation. See Table 10.3.1 for recommended emergent wetland plant species for wetponds. Intent: Planting of shallow pond areas helps to stabilize settled sediment and prevent resuspension.

Note: The recommendations in Table 10.3.1 are for western Washington only. Local knowledge should be used to adapt this information if used in other areas.

- Cattails (Typha latifolia) are not recommended because they tend to crowd out other species and will typically establish themselves anyway.
- If the wetpond discharges to a phosphorus-sensitive lake or wetland, shrubs that form a dense cover should be planted on slopes above the WQ design water surface on at least three sides. For banks that are berms, no planting is allowed if the berm is regulated by dam safety requirements. The purpose of planting is to discourage waterfowl use of the pond and to provide shading. Some suitable trees and shrubs include vine maple (Acer circinatum), wild cherry (Prunus emarginata), red osier dogwood (Cornus stolonifera), California myrtle (Myrica californica), Indian plum (Oemleria cerasiformis), and Pacific yew (Taxus brevifolia) as well as numerous ornamental species.

Recommended Design Features

The following design features should be incorporated into the wetpond design where site conditions allow:

- The method of construction of soil/landscape systems can cause natural selection of specific plant species. Consult a soil restoration or wetland soil scientist for site-specific recommendations. The soil formulation will impact the plant species that will flourish or suffer on the site, and the formulation should be such that it encourages desired species and discourages undesired species.

- For wetpool depths in excess of 6 feet, it is recommended that some form of recirculation be provided in the summer, such as a fountain or aerator, to prevent stagnation and low dissolved oxygen conditions.
- A flow length-to-width ratio greater than the 3:1 minimum is desirable. If the ratio is 4:1 or greater, then the dividing berm is not required, and the pond may consist of one cell rather than two. A one-cell pond must provide at least 6-inches of sediment storage depth. A one cell pond must also provide a minimum depth of 4 feet for the volume equivalent to the first cell of a two-cell design.
- A tear-drop shape, with the inlet at the narrow end, rather than a rectangular pond is preferred since it minimizes dead zones caused by corners.
- A small amount of base flow is desirable to maintain circulation and reduce the potential for low oxygen conditions during late summer.
- Evergreen or columnar deciduous trees along the west and south sides of ponds are recommended to reduce thermal heating, except that no trees or shrubs may be planted on berms meeting the criteria of dams regulated for safety. In addition to shade, trees and shrubs also discourage waterfowl use and the attendant phosphorus enrichment problems they cause. Trees should be set back so that the branches will not extend over the pond.

  Intent: Evergreen trees or shrubs are preferred to avoid problems associated with leaf drop. Columnar deciduous trees (e.g., hornbeam, Lombardy poplar, etc.) typically have fewer leaves than other deciduous trees.
- The number of inlets to the facility should be limited; ideally there should be only one inlet. The flowpath length should be maximized from inlet to outlet for all inlets to the facility.
- The access and maintenance road could be extended along the full length of the wetpond and could double as playcourts or picnic areas. Placing finely ground bark or other natural material over the road surface would render it more pedestrian friendly.
- The following design features should be incorporated to enhance aesthetics where possible:
  - Provide pedestrian access to shallow pool areas enhanced with emergent wetland vegetation. This allows the pond to be more accessible without incurring safety risks.
  - Provide side slopes that are sufficiently gentle to avoid the need for fencing (3:1 or flatter).
  - Create flat areas overlooking or adjoining the pond for picnic tables or seating that can be used by residents. Walking or jogging trails around the pond are easily integrated into site design.

- Include fountains or integrated waterfall features for privately maintained facilities.
- Provide visual enhancement with clusters of trees and shrubs. On most pond sites, it is important to amend the soil before planting since ponds are typically placed well below the native soil horizon in very poor soils. Make sure dam safety restrictions against planting do not apply.
- Orient the pond length along the direction of prevailing summer winds (typically west or southwest) to enhance wind mixing.

Construction Criteria

- Sediment that has accumulated in the pond must be removed after construction in the drainage area of the pond is complete (unless used for a liner - see below).
- Sediment that has accumulated in the pond at the end of construction may be used in excessively drained soils to meet the liner requirements if the sediment meets the criteria for low permeability or treatment liners in keeping with guidance in Chapter 4. Sediment used for a soil liner must be graded to provide uniform coverage and must meet the thickness specifications in Chapter 4. The sediment must not reduce the design volume of the pond. The pond must be over-excavated initially to provide sufficient room for the sediments to serve as a liner.

Operation and Maintenance

- Maintenance is of primary importance if wetponds are to continue to function as originally designed. A local government, a designated group such as a homeowners' association, or a property owner shall accept the responsibility for maintaining the structures and the impoundment area. A specific maintenance plan shall be formulated outlining the schedule and scope of maintenance operations.
- The pond should be inspected by the local government annually. The maintenance standards contained in Section 4.6 are measures for determining if maintenance actions are required as identified through the annual inspection.
- Site vegetation should be trimmed as necessary to keep the pond free of leaves and to maintain the aesthetic appearance of the site. Slope areas that have become bare should be revegetated and eroded areas should be regraded prior to being revegetated.
- Sediment should be removed when the 1-foot sediment zone is full plus 6 inches. Sediments should be tested for toxicants in compliance with current disposal requirements. Sediments must be disposed in accordance with current local health department requirements and the Minimum Functional Standards for Solid Waste Handling. See Volume IV, Appendix IV-G Recommendations for Management of Street Waste for additional guidance.

- Any standing water removed during the maintenance operation must be properly disposed of. The preferred disposal option is discharge to a sanitary sewer at an approved location. Other disposal options include discharge back into the wetpool facility or the storm sewer system if certain conditions are met. See Volume IV, Appendix IV-G for additional guidance.

Table 10.3.1
Emergent Wetland Plant Species Recommended for Wetponds

Species	Common Name	Notes	Maximum Depth
INUNDATION TO 1-FOOT			
Agrostis exarata[1]	Spike bent grass	Prairie to coast	to 2 feet
Carex stipata	Sawbeak sedge	Wet ground	
Eleocharis palustris	Spike rush	Margins of ponds, wet meadows	to 2 feet
Glyceria occidentalis	Western mannagrass	Marshes, pond margins	to 2 feet
Juncus tenuis	Slender rush	Wet soils, wetland margins	
Oenanthe sarmentosa	Water parsley	Shallow water along stream and pond margins; needs saturated soils all summer	
Scirpus atrocinctus (formerly S. cyperinus)	Woolgrass	Tolerates shallow water; tall clumps	
Scirpus microcarpus	Small-fruited bulrush	Wet ground to 18 inches depth	18 inches
Sagittaria latifolia	Arrowhead		
INUNDATION 1 TO 2 FEET			
Agrostis exarata[1]	Spike bent grass	Prairie to coast	
Alisma plantago-aquatica	Water plantain		
Eleocharis palustris	Spike rush	Margins of ponds, wet meadows	
Glyceria occidentalis	Western mannagrass	Marshes, pond margins	
Juncus effusus	Soft rush	Wet meadows, pastures, wetland margins	
Scirpus microcarpus	Small-fruited bulrush	Wet ground to 18 inches depth	18 inches
Sparganium emmersum	Bur reed	Shallow standing water, saturated soils	
INUNDATION 1 TO 3 FEET			
Carex obnupta	Slough sedge	Wet ground or standing water	1.5 to 3 feet
Beckmania syzigachne[1]	Western sloughgrass	Wet prairie to pond margins	
Scirpus acutus[2]	Hardstem bulrush	Single tall stems, not clumping	to 3 feet
Scirpus validus[2]	Softstem bulrush		
INUNDATION GREATER THAN 3 FEET			
Nuphar polysepalum	Spatterdock	Deep water	3 to 7.5 feet
Nymphaea odorata[1]	White waterlily	Shallow to deep ponds	to 6 feet

Notes:
(1) Non-native species. *Beckmania syzigachne* is native to Oregon. Native species are preferred.
(2) *Scirpus* tubers must be planted shallower for establishment, and protected from foraging waterfowl until established. Emerging aerial stems should project above water surface to allow oxygen transport to the roots.
Primary sources: Municipality of Metropolitan Seattle, *Water Pollution Control Aspects of Aquatic Plants*, 1990. Hortus Northwest, *Wetland Plants for Western Oregon*, Issue 2, 1991. Hitchcock and Cronquist, *Flora of the Pacific Northwest*, 1973.

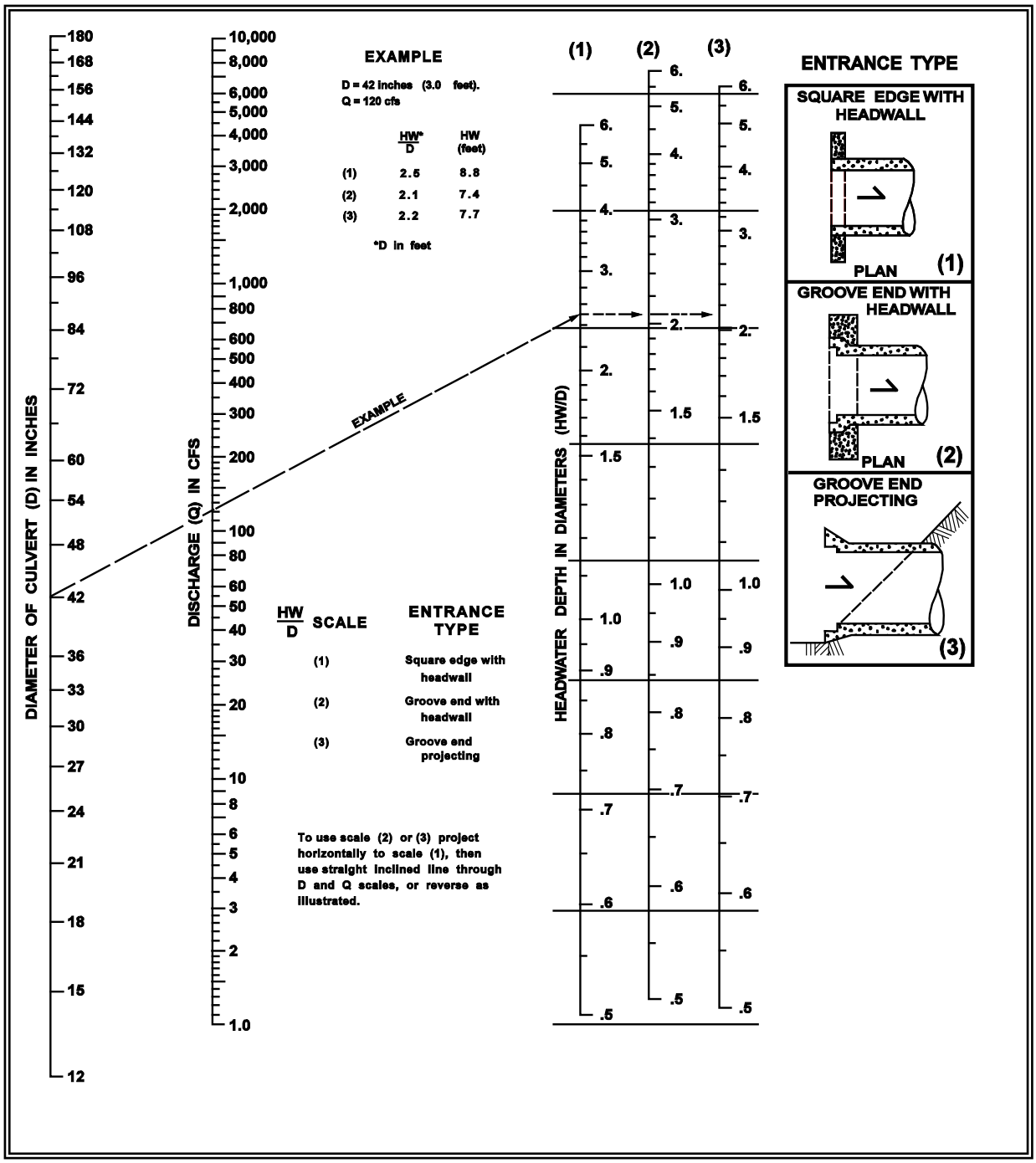

Figure 10.3.2 – Headwater Depth for Smooth Interior Pipe Culverts with Inlet Control

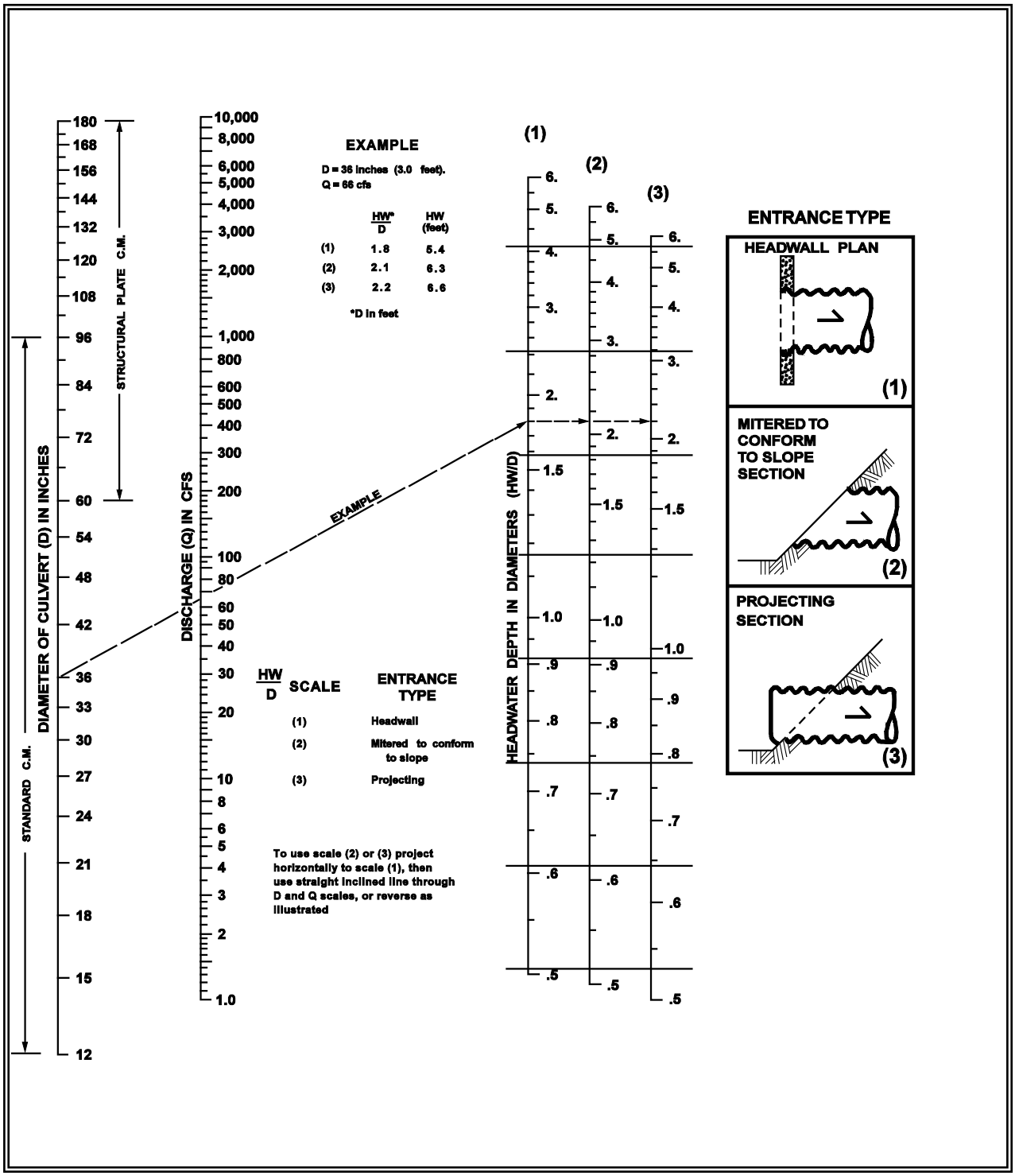

Figure 10.3.3 – Headwater Depth for Corrugated Pipe Culverts with Inlet Control

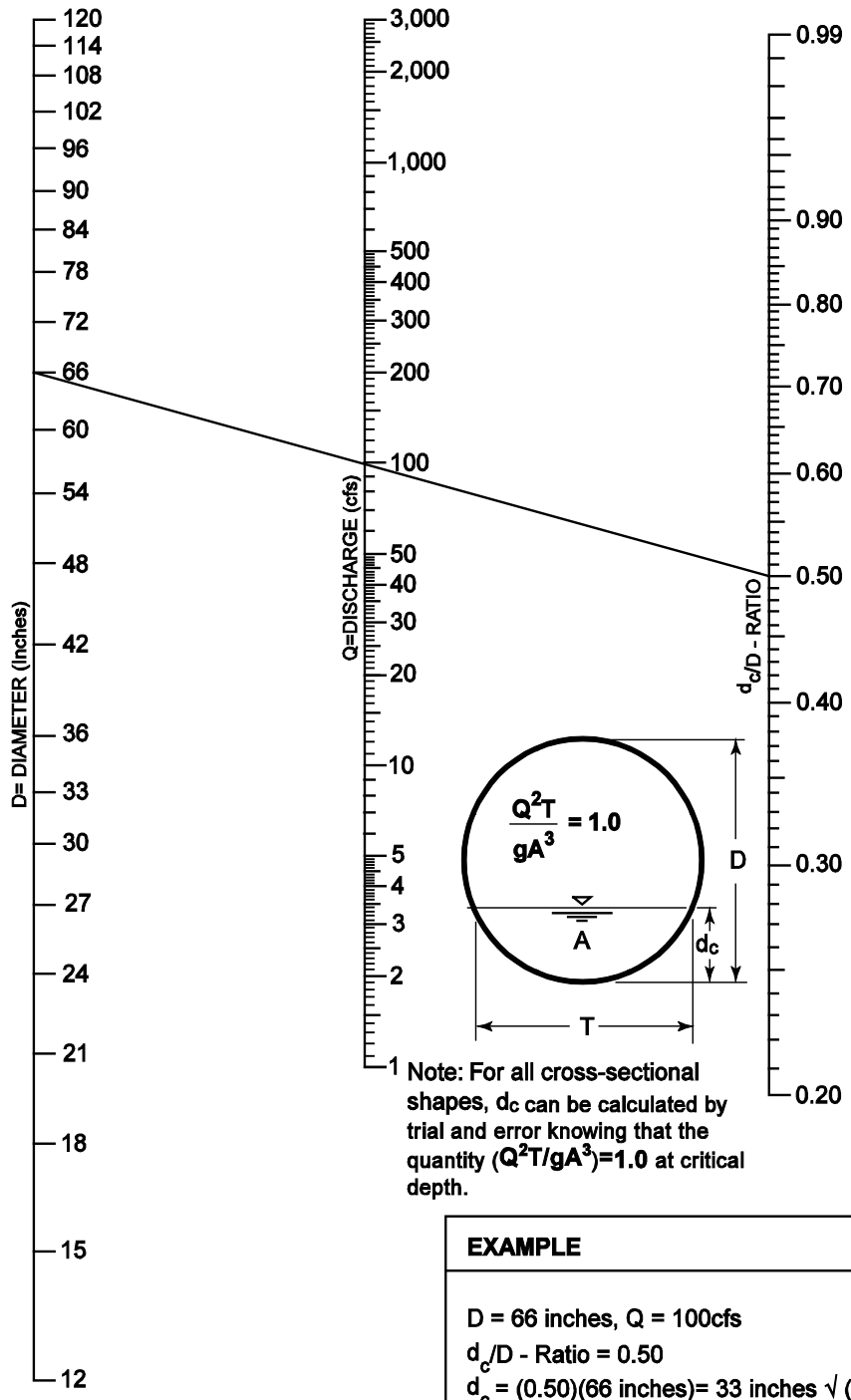

Note: For all cross-sectional shapes, d_c can be calculated by trial and error knowing that the quantity $(Q^2T/gA^3)=1.0$ at critical depth.

EXAMPLE

D = 66 inches, Q = 100cfs

d_c/D - Ratio = 0.50

d_c = (0.50)(66 inches)= 33 inches √ (12 inches/ft)

d_c= 2.75 feet

Figure 10.3.4 – Critical Depth of Flow for Circular Culverts

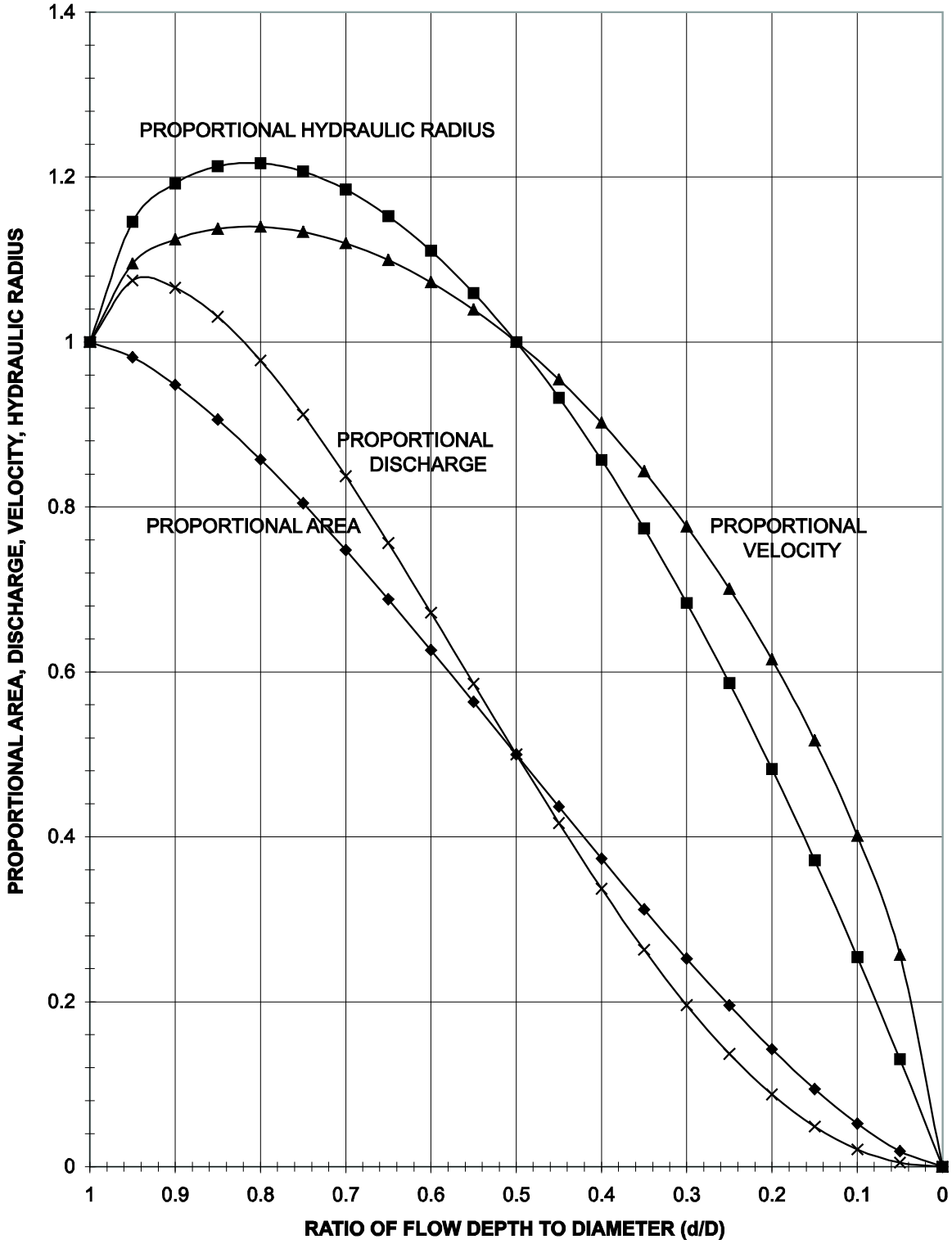

Figure 10.3.5 – Circular Channel Ratios

BMP T10.20: Wetvaults

Purpose and Definition

A wetvault is an underground structure similar in appearance to a detention vault, except that a wetvault has a permanent pool of water (wetpool) which dissipates energy and improves the settling of particulate pollutants (see the wetvault details in Figure 10.3.6). Being underground, the wetvault lacks the biological pollutant removal mechanisms, such as algae uptake, present in surface wetponds.

Applications and Limitations

A wetvault may be used for commercial, industrial, or roadway projects if there are space limitations precluding the use of other treatment BMPs. The use of wetvaults for residential development is highly discouraged. Combined detention and wetvaults are allowed; see BMP T10.40.

A wetvault is believed to be ineffective in removing dissolved pollutants such as soluble phosphorus or metals such as copper. There is also concern that oxygen levels will decline, especially in warm summer months, because of limited contact with air and wind. However, the extent to which this potential problem occurs has not been documented.

Below-ground structures like wetvaults are relatively difficult and expensive to maintain. The need for maintenance is often not seen and as a result routine maintenance does not occur.

If oil control is required for a project, a wetvault may be combined with an API oil/water separator.

Design Criteria

Sizing Procedure

As with wetponds, the primary design factor that determines the removal efficiency of a wetvault is the volume of the wetpool. The larger the volume, the higher the potential for pollutant removal. Performance is also improved by avoiding dead zones (like corners) where little exchange occurs, using large length-to-width ratios, dissipating energy at the inlet, and ensuring that flow rates are uniform to the extent possible and not increased between cells.

The sizing procedure for a wetvault is identical to the sizing procedure for a wetpond. The wetpool volume for the wetvault shall be equal to or greater than the total volume of runoff from the 6-month, 24-hour storm event. Alternatively, use the Water Quality Design Storm Volume estimated by an approved continuous runoff model.

Typical design details and concepts for the wetvault are shown in Figure 10.3.6.

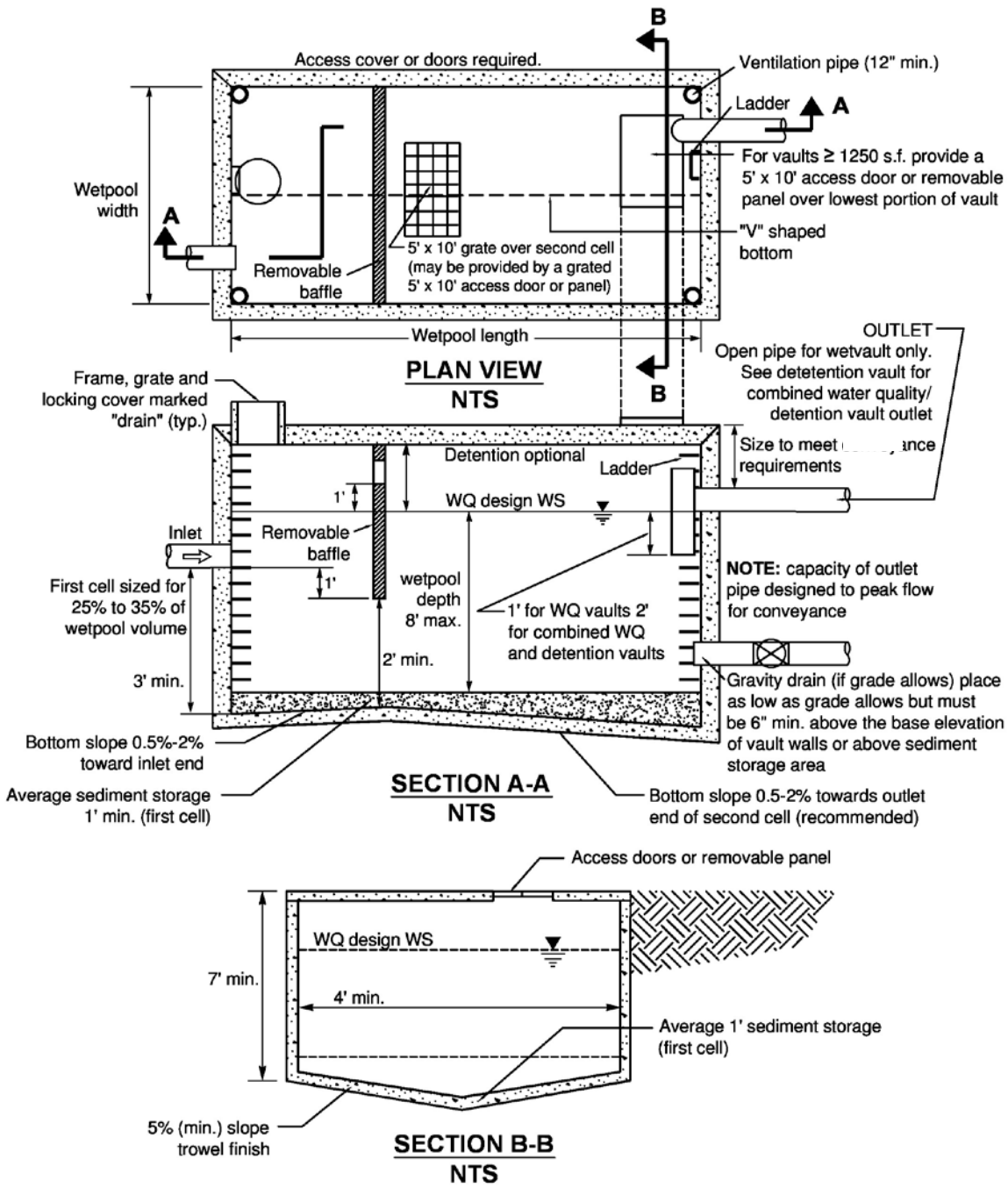

Figure 10.3.6 – Wetvault

Wetpool Geometry

Same as specified for wetponds (see BMP T10.10) except for the following two modifications:

- The sediment storage in the first cell shall be an average of 1-foot. Because of the v-shaped bottom, the depth of sediment storage needed above the bottom of the side wall is roughly proportional to vault width according to the schedule below:

Vault Width	Sediment Depth (from bottom of side wall)
15'	10"
20'	9"
40'	6"
60'	4"

- The second cell shall be a minimum of 3 feet deep since planting cannot be used to prevent resuspension of sediment in shallow water as it can in open ponds.

Vault Structure

- The vault shall be separated into two cells by a wall or a removable baffle. If a wall is used, a 5-foot by 10-foot removable maintenance access must be provided for both cells. If a removable baffle is used, the following criteria apply:

  1) The baffle shall extend from a minimum of 1-foot above the WQ design water surface to a minimum of 1-foot below the invert elevation of the inlet pipe.

  2) The lowest point of the baffle shall be a minimum of 2 feet from the bottom of the vault, and greater if feasible.

- If the vault is less than 2,000 cubic feet (inside dimensions), or if the length-to-width ratio of the vault pool is 5:1 or greater, the baffle or wall may be omitted and the vault may be one-celled.

- The two cells of a wetvault should not be divided into additional subcells by internal walls. If internal structural support is needed, it is preferred that post and pier construction be used to support the vault lid rather than walls. Any walls used within cells must be positioned so as to lengthen, rather than divide, the flowpath.

  Intent: Treatment effectiveness in wetpool facilities is related to the extent to which plug flow is achieved and short-circuiting and dead zones are avoided. Structural walls placed within the cells can interfere with plug flow and create significant dead zones, reducing treatment effectiveness.

- The bottom of the first cell shall be sloped toward the access opening. Slope should be between 0.5 percent (minimum) and 2 percent

(maximum). The second cell may be level (longitudinally) sloped toward the outlet, with a high point between the first and second cells. The intent of sloping the bottom is direct the sediment accumulation to the closest access point for maintenance purposes. Sloping the second cell towards the access opening for the first cell is also acceptable.

- The vault bottom shall slope laterally a minimum of 5 percent from each side towards the center, forming a broad "v" to facilitate sediment removal. Note: More than one "v" may be used to minimize vault depth.

  Exception: The Local Plan Approval Authority may allow the vault bottom to be flat if removable panels are provided over the entire vault. Removable panels should be at grade, have stainless steel lifting eyes, and weigh no more than 5 tons per panel.

- The highest point of a vault bottom must be at least 6 inches below the outlet elevation to provide for sediment storage over the entire bottom.
- Provision for passage of flows should the outlet plug shall be provided.
- Wetvaults may be constructed using arch culvert sections provided the top area at the WQ design water surface is, at a minimum, equal to that of a vault with vertical walls designed with an average depth of 6 feet.

  Intent: To prevent decreasing the surface area available for oxygen exchange.

- Wetvaults shall conform with the "Materials" and "Structural Stability" criteria specified for detention vaults in Volume III, Chapter 3.
- Where pipes enter and leave the vault below the WQ design water surface, they shall be sealed using a non-porous, non-shrinking grout.

Inlet and Outlet

- The inlet to the wetvault shall be submerged with the inlet pipe invert a minimum of 3 feet from the vault bottom. The top of the inlet pipe should be submerged at least 1-foot, if possible.

  Intent: The submerged inlet is to dissipate energy of the incoming flow. The distance from the bottom is to minimize resuspension of settled sediments. Alternative inlet designs that accomplish these objectives are acceptable.

- Unless designed as an off-line facility, the capacity of the outlet pipe and available head above the outlet pipe should be designed to convey the 100-year design flow for developed site conditions without overtopping the vault. The available head above the outlet pipe must be a minimum of 6 inches.

- The outlet pipe shall be back-sloped or have tee section, the lower arm of which should extend 1 foot below the WQ design water surface to provide for trapping of oils and floatables in the vault.
- The Local Plan Approval Authority may require a bypass/shutoff valve to enable the vault to be taken offline for maintenance.

Access Requirements

Same as for detention vaults (see Volume III, Section 3.2) except for the following additional requirement for wetvaults:

- A minimum of 50 square feet of grate should be provided over the second cell. For vaults in which the surface area of the second cell is greater than 1,250 square feet, 4 percent of the top should be grated. This requirement may be met by one grate or by many smaller grates distributed over the second cell area. Note: a grated access door can be used to meet this requirement.

  Intent: The grate allows air contact with the wetpool in order to minimize stagnant conditions which can result in oxygen depletion, especially in warm weather.

Access Roads, Right of Way, and Setbacks

Same as for detention vaults (see Volume III, Section 3.2).

Recommended Design Features

The following design features should be incorporated into wetvaults where feasible, but they are not specifically required:

- The floor of the second cell should slope toward the outlet for ease of cleaning.
- The inlet and outlet should be at opposing corners of the vault to increase the flowpath.
- A flow length-to-width ratio greater than 3:1 minimum is desirable.
- Lockable grates instead of solid manhole covers are recommended to increase air contact with the wetpool.
- Galvanized materials shall not be used unless unavoidable.
- The number of inlets to the wetvault should be limited, and the flowpath length should be maximized from inlet to outlet for all inlets to the vault.

Construction Criteria

Sediment that has accumulated in the vault must be removed after construction in the drainage area is complete. If no more than 12 inches of sediment have accumulated after the infrastructure is built, cleaning may be left until after building construction is complete. In general, sediment accumulation from stabilized drainage areas is not expected to exceed an average of 4 inches per year in the first cell. If sediment accumulation is greater than this amount, it will be assumed to be from construction unless it can be shown otherwise.

Operation and Maintenance

- Accumulated sediment and stagnant conditions may cause noxious gases to form and accumulate in the vault. Vault maintenance procedures must meet OSHA confined space entry requirements, which include clearly marking entrances to confined space areas. This may be accomplished by hanging a removable sign in the access riser(s), just under the access lid.
- Facilities should be inspected by the local government annually. The maintenance standards contained in Section 4.6 of this volume are measures for determining if maintenance actions are required as identified through the annual inspection.
- Sediment should be removed when the 1-foot sediment zone is full plus 6 inches. Sediments should be tested for toxicants in compliance with current disposal requirements. Sediments must be disposed in accordance with current local health department requirements and the Minimum Functional Standards for Solid Waste Handling. See Volume IV, Appendix IV-G Recommendations for Management of Street Waste for additional guidance.
- Any standing water removed during the maintenance operation must be properly disposed of. The preferred disposal option is discharge to a sanitary sewer at an approved location. Other disposal options include discharge back into the wetpool facility or the storm sewer system if certain conditions are met. See Volume IV, Appendix IV-G for additional guidance.

Modifications for Combining with a Baffle Oil/Water Separator

If the project site is a high-use site and a wetvault is proposed, the vault may be combined with a baffle oil/water separator to meet the runoff treatment requirements with one facility rather than two. Structural modifications and added design criteria are given below. However, the maintenance requirements for baffle oil/water separators must be adhered to, in addition to those for a wetvault. This will result in more frequent inspection and cleaning than for a wetvault used only for TSS removal. See Chapter 11 for information on maintenance of baffle oil/water separators.

1. The sizing procedures for the baffle oil/water separator (Chapter 11) should be run as a check to ensure the vault is large enough. If the oil/water separator sizing procedures result in a larger vault size, increase the wetvault size to match.
2. An oil retaining baffle shall be provided in the second cell near the vault outlet. The baffle should not contain a high-flow overflow, or else the retained oil will be washed out of the vault during large storms.
3. The vault shall have a minimum length-to-width ratio of 5:1.

4. The vault shall have a design water depth-to-width ratio of between 1:3 to 1:2.
5. The vault shall be watertight and shall be coated to protect from corrosion.
6. Separator vaults shall have a shutoff mechanism on the outlet pipe to prevent oil discharges during maintenance and to provide emergency shut-off capability in case of a spill. A valve box and riser shall also be provided.
7. Wetvaults used as oil/water separators must be off-line and must bypass flows greater than the off-line WQ design flow multiplied by the off-line ratio indicated in Figure 9.4.6b.

   Intent: This design minimizes the entrainment and/or emulsification of previously captured oil during very high flow events.

BMP T10.30: Stormwater Treatment Wetlands

Purpose and Definition

In land development situations, wetlands are usually constructed for two main reasons: to replace or mitigate impacts when natural wetlands are filled or impacted by development (mitigation wetlands), and to treat stormwater runoff (stormwater treatment wetlands). Stormwater treatment wetlands are shallow man-made ponds that are designed to treat stormwater through the biological processes associated with emergent aquatic plants (see the stormwater wetland details in Figure 10.3.7 and Figure 10.3.8.

Wetlands created to mitigate disturbance impacts, such as filling, may not also be used as stormwater treatment facilities. This is because of the different, incompatible functions of the two kinds of wetlands. Mitigation wetlands are intended to function as full replacement habitat for fish and wildlife, providing the same functions and harboring the same species diversity and biotic richness as the wetlands they replace. Stormwater treatment wetlands are used to capture and transform pollutants, just as wetponds are, and over time pollutants will concentrate in the sediment. This is not a healthy environment for aquatic life. Stormwater treatment wetlands are used to capture pollutants in a managed environment so that they will not reach natural wetlands and other ecologically important habitats. In addition, vegetation must occasionally be harvested and sediment dredged in stormwater treatment wetlands, further interfering with use for wildlife habitat.

In general, stormwater wetlands perform well to remove sediment, metals, and pollutants that bind to humic or organic acids. Phosphorus removal in stormwater wetlands is highly variable.

Applications and Limitations

This stormwater wetland design occupies about the same surface area as wetponds, but has the potential to be better integrated aesthetically into a site because of the abundance of emergent aquatic vegetation. The most critical factor for a successful design is the provision of an adequate supply of water for most of the year. Careful planning is needed to be sure sufficient water will be retained to sustain good wetland plant growth. Since water depths are shallower than in wetponds, water loss by evaporation is an important concern. Stormwater wetlands are a good WQ facility choice in areas with high winter ground water levels.

Design Criteria

When used for stormwater treatment, stormwater wetlands employ some of the same design features as wetponds. However, instead of gravity settling being the dominant treatment process, pollutant removal mediated by aquatic vegetation and the microbiological community associated with that vegetation becomes the dominant treatment process. Thus when designing wetlands, water volume is not the dominant design criteria. Rather, factors which affect plant vigor and biomass are the primary concerns.

Sizing Procedure

Step 1: The volume of a basic wetpond is used as a template for sizing the stormwater wetland. The design volume is the total volume of runoff from the 6-month, 24-hour storm event. Alternatively, use the Water Quality Design Storm Volume estimated by an approved continuous runoff model.

Step 2: Calculate the surface area of the stormwater wetland. The surface area of the wetland shall be the same as the top area of a wetpond sized for the same site conditions. Calculate the surface area of the stormwater wetland by using the volume from Step 1 and dividing by the average water depth (use 3 feet).

Step 3: Determine the surface area of the first cell of the stormwater wetland. Use the volume determined from Criterion 2 under "Wetland Geometry", and the actual depth of the first cell.

Step 4: Determine the surface area of the wetland cell. Subtract the surface area of the first cell (Step 3) from the total surface area (Step 2).

Step 5: Determine water depth distribution in the second cell. Decide if the top of the dividing berm will be at the surface or submerged (designer's choice). Adjust the distribution of water depths in the second cell according to Criterion 8 under "Wetland Geometry" below. Note: This will result in a facility that holds less volume than that determined in Step 1 above. This is acceptable.

Intent: The surface area of the stormwater wetland is set to be roughly equivalent to that of a wetpond designed for the same site so as not to discourage use of this option.

Step 6: Choose plants. See Table 10.3.1 for a list of plants recommended for wetpond water depth zones, or consult a wetland scientist.

Wetland Geometry

1. Stormwater wetlands shall consist of two cells, a presettling cell and a wetland cell.
2. The presettling cell shall contain approximately 33 percent of the wetpool volume calculated in Step 1 above.
3. The depth of the presettling cell shall be between 4 feet (minimum) and 8 feet (maximum), excluding sediment storage.
4. One-foot of sediment storage shall be provided in the presettling cell.
5. The wetland cell shall have an average water depth of about 1.5 feet (plus or minus 3 inches).
6. The "berm" separating the two cells shall be shaped such that its downstream side gradually slopes to form the second shallow wetland cell (see the section view in Figure 10.3.7). Alternatively, the second cell may be graded naturalistically from the top of the dividing berm (see Criterion 8 below).
7. The top of berm shall be either at the WQ design water surface or submerged 1-foot below the WQ design water surface, as with wetponds. Correspondingly, the side slopes of the berm must meet the following criteria:
    a. If the top of berm is at the WQ design water surface, the berm side slopes shall be no steeper than 3H:1V.
    b. If the top of berm is submerged 1-foot, the upstream side slope may be up to 2H:1V. If the berm is at the water surface, then for safety reasons, its slope should be not greater than 3:1, just as the pond banks should not be greater than 3:1 if the pond is not fenced. A steeper slope (2:1 rather than 3:1) is allowable if the berm is submerged in 1 foot of water. If submerged, the berm is not considered accessible, and the steeper slope is allowable.
8. Two examples are provided for grading the bottom of the wetland cell. One example is a shallow, evenly graded slope from the upstream to the downstream edge of the wetland cell (see Figure 10.3.7). The second example is a "naturalistic" alternative, with the specified range of depths intermixed throughout the second cell (see Figure 10.3.8). A distribution of depths shall be provided in the wetland cell depending on whether the dividing berm is at the water surface or submerged (see Table 10.3.2 below). The maximum depth is 2.5 feet in either configuration. Other configurations within the wetland geometry constraints listed above may be approved by the Local Plan Approval Authority.

Table 10.3.2 Distribution of Depths in Wetland Cell			
Dividing Berm at WQ Design Water Surface		**Dividing Berm Submerged 1-Foot**	
Depth Range (feet)	**Percent**	**Depth Range (feet)**	**Percent**
0.1 to 1	25	1 to 1.5	40
1 to 2	55	1.5 to 2	40
2 to 2.5	20	2 to 2.5	20

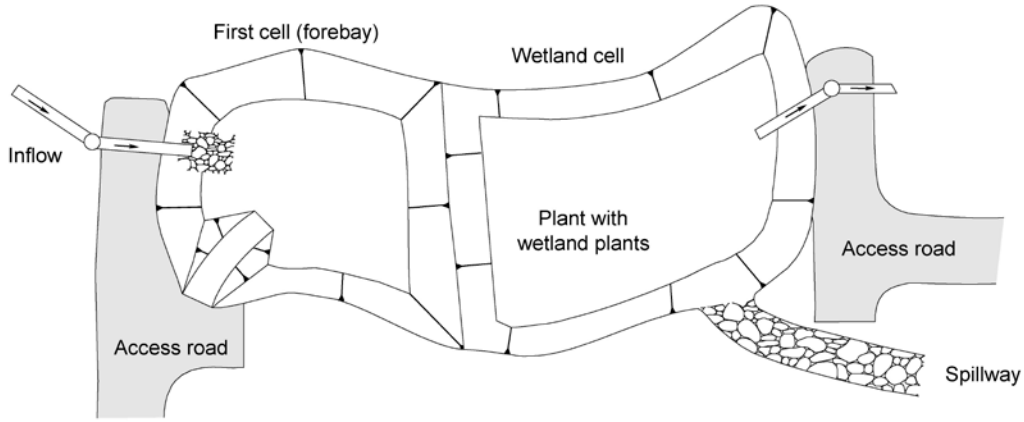

PLAN VIEW Option A
NTS

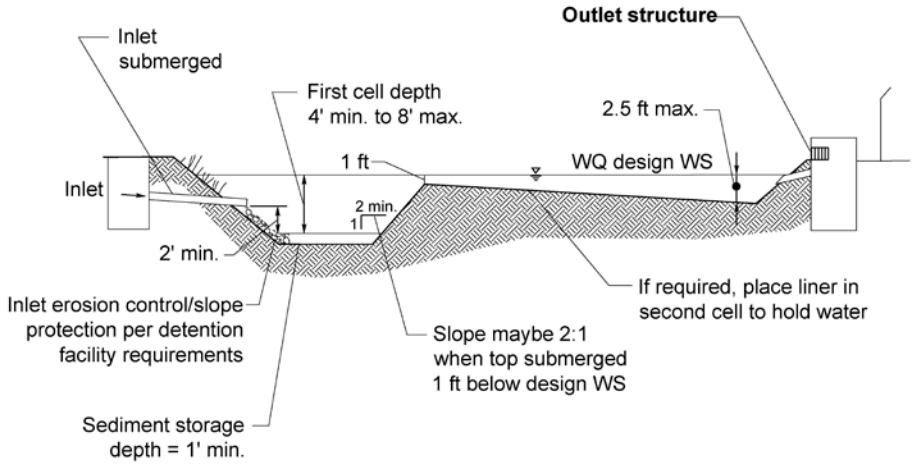

SECTION VIEW Option A
NTS

Note: See detention facility requirements for location and setback requirements.

Figure 10.3.7 – Stormwater Wetland — Option One

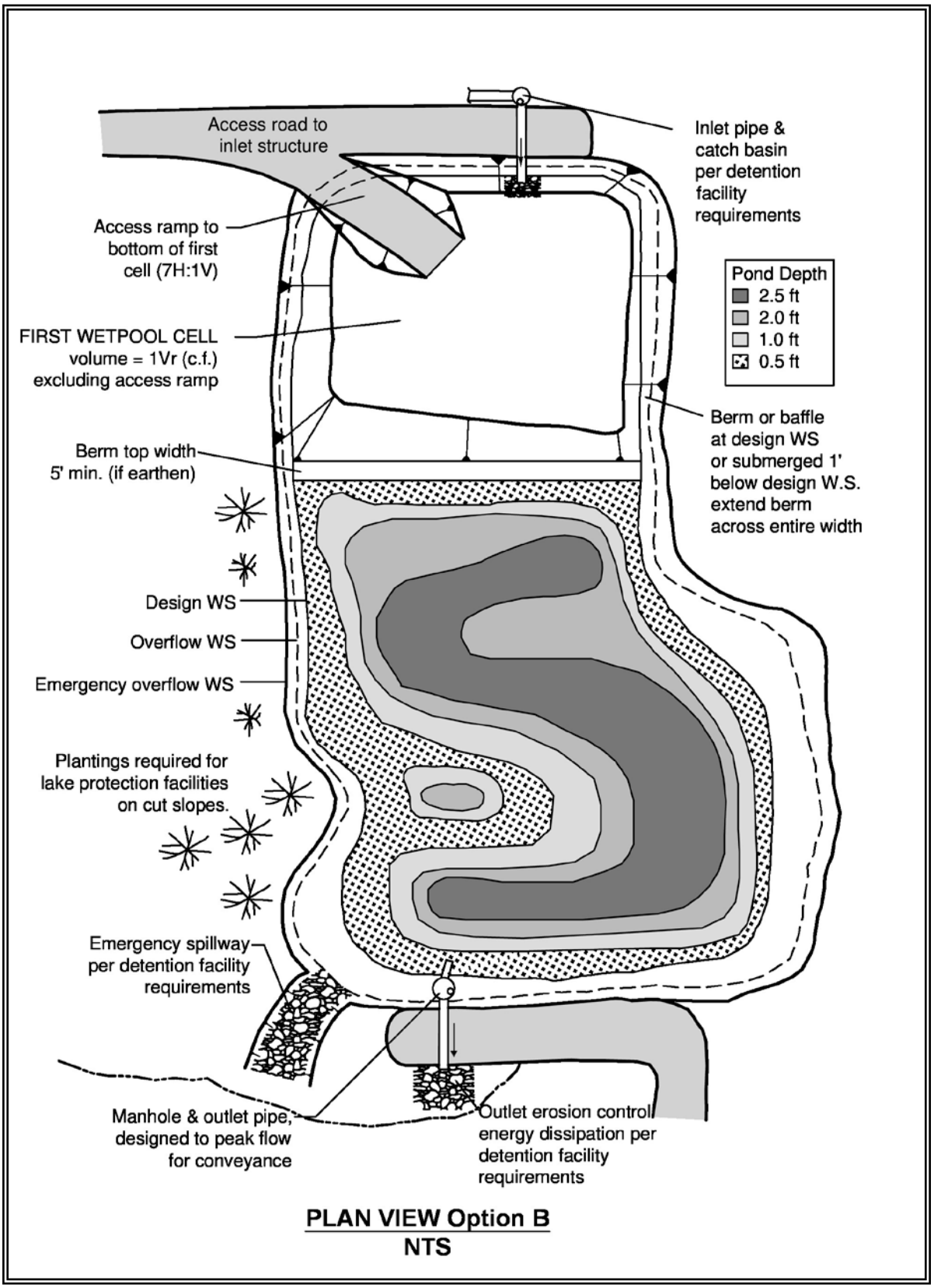

Figure 10.3.8 – Stormwater Wetland — Option Two

Lining Requirements

Constructed wetlands are not intended to infiltrate. In infiltrative soils, both cells of the stormwater wetland shall be lined. To determine whether a low-permeability liner or a treatment liner is required, determine whether the following conditions will be met. If soil permeability will allow sufficient water retention, lining may be waived.

1. The second cell must retain water for at least 10 months of the year.
2. The first cell must retain at least three feet of water year-round.
3. A complete precipitation record shall be used when establishing these conditions. Evapotranspiration losses shall be taken into account as well as infiltration losses.

Intent: Many wetland plants can adapt to periods of summer drought, so a limited drought period is allowed in the second cell. This may allow a treatment liner rather than a low permeability liner to be used for the second cell. The first cell must retain water year-round in order for the presettling function to be effective.

- If a low permeability liner is used, a minimum of 18 inches of native soil amended with good topsoil or compost (one part compost mixed with 3 parts native soil) must be placed over the liner. For geomembrane liners, a soil depth of 3 feet is recommended to prevent damage to the liner during planting. Hydric soils are not required.

The criteria for liners given in Chapter 4 must be observed.

Inlet and Outlet

Same as for wetponds (see BMP T10.10).

Access and Setbacks

- Location of the stormwater wetland relative to site constraints (e.g., buildings, property lines, etc.) shall be the same as for detention ponds (see Volume III). See Section 4.3 for typical setback requirements for water quality facilities.
- Access and maintenance roads shall be provided and designed according to the requirements for detention ponds (see Volume III). Access and maintenance roads shall extend to both the wetland inlet and outlet structures. An access ramp (7H minimum:1V) shall be provided to the bottom of the first cell unless all portions of the cell can be reached and sediment loaded from the top of the wetland side slopes.
- If the dividing berm is also used for access, it should be built to sustain loads of up to 80,000 pounds.

Planting Requirements

The wetland cell shall be planted with emergent wetland plants following the recommendations given in Table 10.3.1 or the recommendations of a wetland specialist. Note: Cattails (Typha latifolia) are not recommended. They tend to escape to natural wetlands and crowd out other species. In addition, the shoots die back each fall and will result in oxygen depletion in the wetpool unless they are removed.

Construction Criteria

- Construction and maintenance considerations are the same as for wetponds.
- Construction of the naturalistic alternative (Option 2) can be easily done by first excavating the entire area to the 1.5-foot average depth. Then soil subsequently excavated to form deeper areas can be deposited to raise other areas until the distribution of depths indicated in the design is achieved.

Operation and Maintenance

- Wetlands should be inspected at least twice per year during the first three years during both growing and non-growing seasons to observe plant species presence, abundance, and condition; bottom contours and water depths relative to plans; and sediment, outlet, and buffer conditions.
- Maintenance should be scheduled around sensitive wildlife and vegetation seasons.
- Plants may require watering, physical support, mulching, weed removal, or replanting during the first three years.
- Nuisance plant species should be removed and desirable species should be replanted.
- The effectiveness of harvesting for nutrient control is not well documented. There are many drawbacks to harvesting, including possible damage to the wetlands and the inability to remove nutrients in the below-ground biomass. If harvesting is practiced, it should be done in the late summer.

Resource Material

King County Surface Water Design Manual, September 1998.

Schueler, Thomas. Design of Stormwater Wetland Systems, Guidelines for Creating Diverse and Effective Stormwater Wetland Systems in the Mid-Atlantic Region, October, 1992.

Kadlec, Robert and Robert L. Knight. Treatment Wetlands. 1996.

BMP T10.40: Combined Detention and Wetpool Facilities

Purpose and Definition

Combined detention and WQ wetpool facilities have the appearance of a detention facility but contain a permanent pool of water as well. The following design procedures, requirements, and recommendations cover differences in the design of the stand-alone WQ facility when combined with detention storage. The following combined facilities are addressed:

- Detention/wetpond (basic and large)
- Detention/wetvault
- Detention/stormwater wetland.

There are two sizes of the combined wetpond, a basic and a large, but only a basic size for the combined wetvault and combined stormwater wetland. The facility sizes (basic and large) are related to the pollutant removal goals. See Chapter 3 for more information about treatment performance goals.

Applications and Limitations

Combined detention and water quality facilities are very efficient for sites that also have detention requirements. The water quality facility may often be placed beneath the detention facility without increasing the facility surface area. However, the fluctuating water surface of the live storage will create unique challenges for plant growth and for aesthetics alike.

The basis for pollutant removal in combined facilities is the same as in the stand-alone WQ facilities. However, in the combined facility, the detention function creates fluctuating water levels and added turbulence. For simplicity, the positive effect of the extra live storage volume and the negative effect of increased turbulence are assumed to balance, and are thus ignored when sizing the wetpool volume. For the combined detention/stormwater wetland, criteria that limit the extent of water level fluctuation are specified to better ensure survival of the wetland plants.

Unlike the wetpool volume, the live storage component of the facility should be provided above the seasonal high water table.

Combined Detention and Wetpond (Basic and Large)

Typical design details and concepts for a combined detention and wetpond are shown in Figures 10.3.9 and 10.3.10. The detention portion of the facility shall meet the design criteria and sizing procedures set forth in Volume 3.

Sizing Procedure

The sizing procedure for combined detention and wetponds are identical to those outlined for wetponds and for detention facilities. The wetpool volume for a combined facility shall be equal to or greater than the total volume of runoff from the 6-month, 24-hour storm event. Alternatively,,

use the Water Quality Design Storm Volume estimated by an approved continuous runoff model. Follow the standard procedure specified in Volume III and guidance documents for use of an approved continuous runoff model to size the detention portion of the pond.

Detention and Wetpool Geometry

- The wetpool and sediment storage volumes shall not be included in the required detention volume.
- The "Wetpool Geometry" criteria for wetponds (see BMP T10.10) shall apply with the following modifications/clarifications:

Criterion 1: The permanent pool may be made shallower to take up most of the pond bottom, or deeper and positioned to take up only a limited portion of the bottom. Note, however, that having the first wetpool cell at the inlet allows for more efficient sediment management than if the cell is moved away from the inlet. Wetpond criteria governing water depth must, however, still be met. See Figure 10.3.11 for two possibilities for wetpool cell placement.

Intent: This flexibility in positioning cells is provided to allow for multiple use options, such as volleyball courts in live storage areas in the drier months.

Criterion 2: The minimum sediment storage depth in the first cell is 1-foot. The 6 inches of sediment storage required for detention ponds does not need to be added to this, but 6 inches of sediment storage must be added to the second cell to comply with the detention sediment storage requirement.

Berms, Baffles, and Slopes

Same as for wetponds (see BMP T10.10).

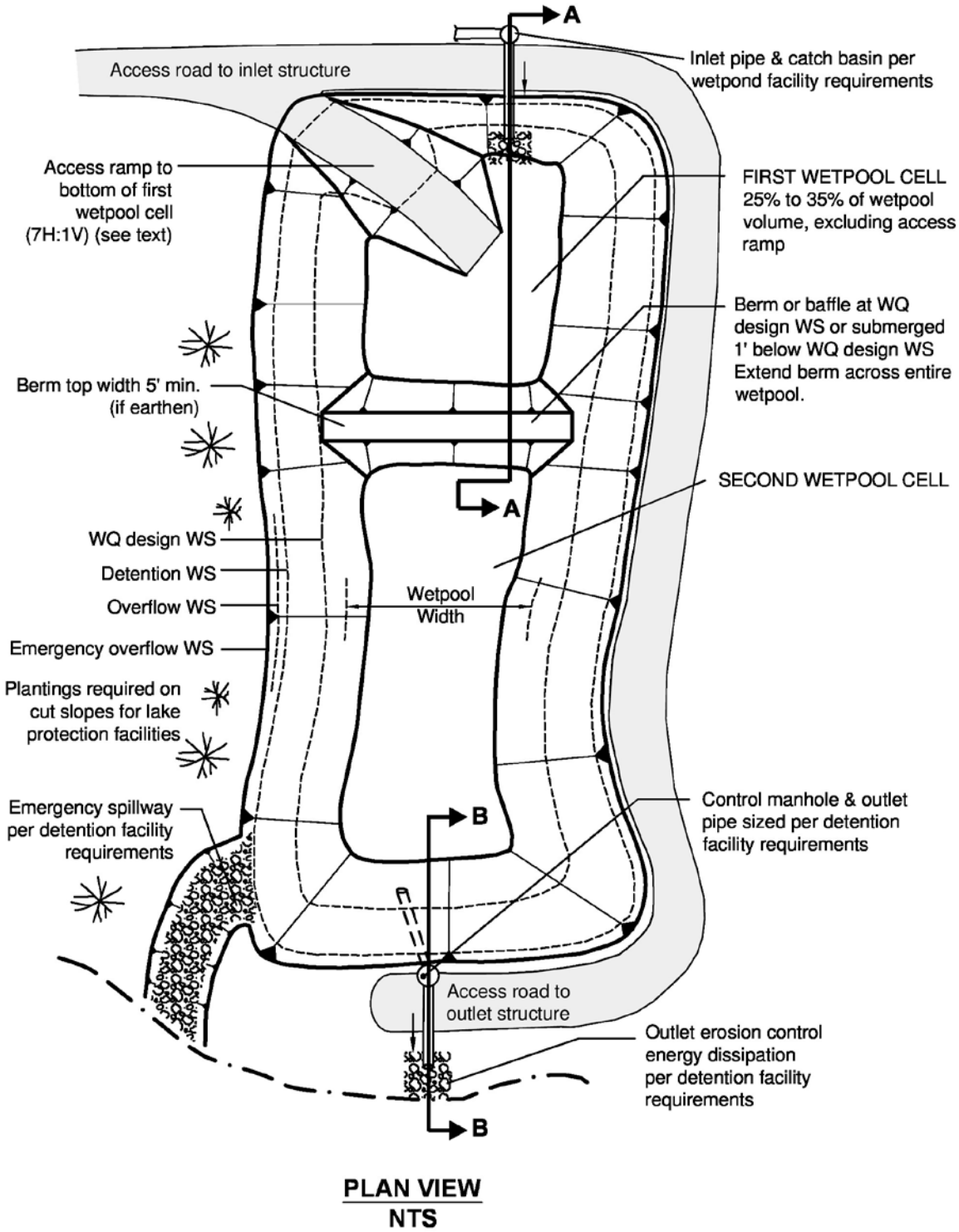

Figure 10.3.9 – Combined Detention and Wetpond

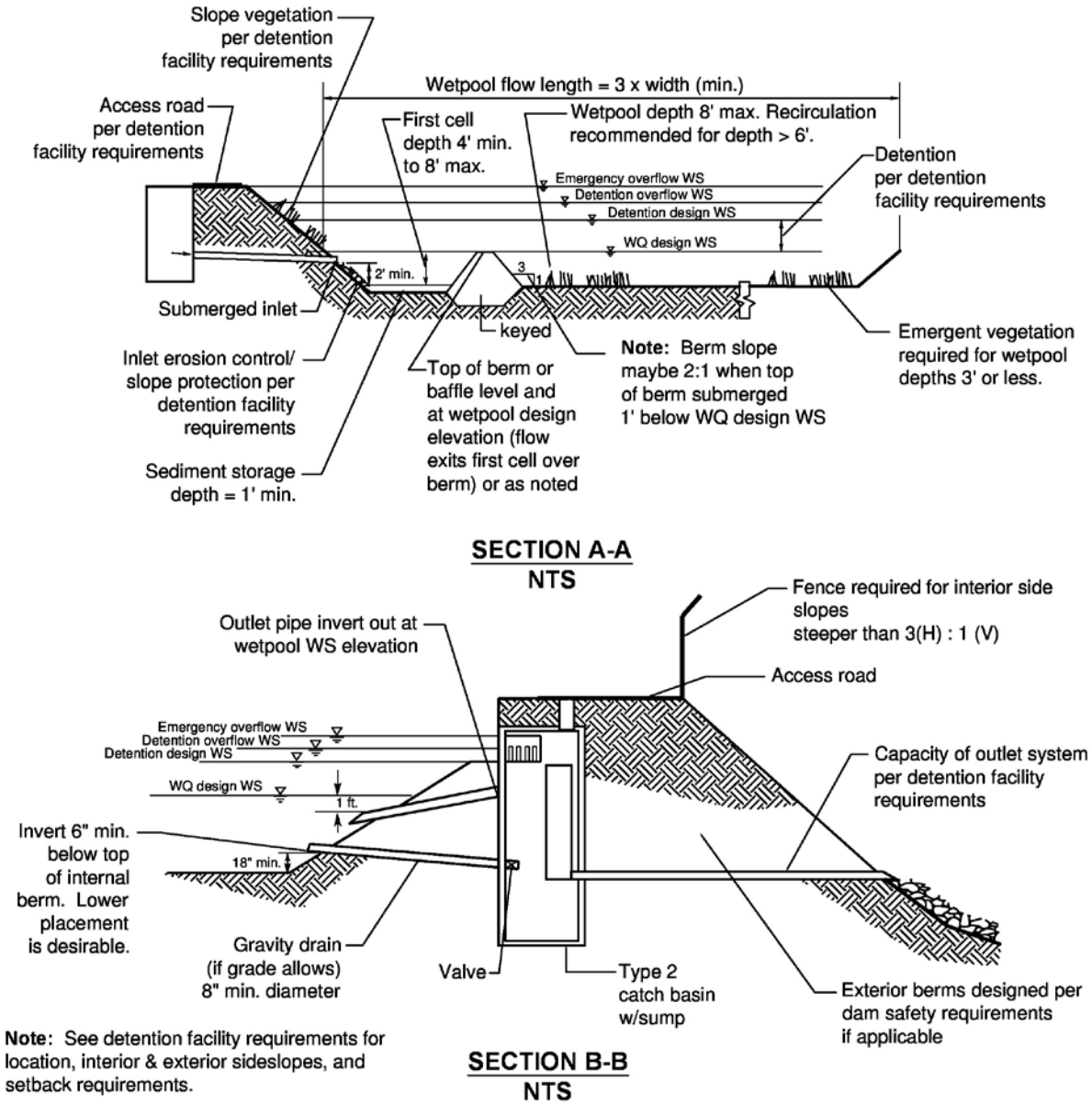

Figure 10.3.10 – Combined Detention and Wetpond (Continued)

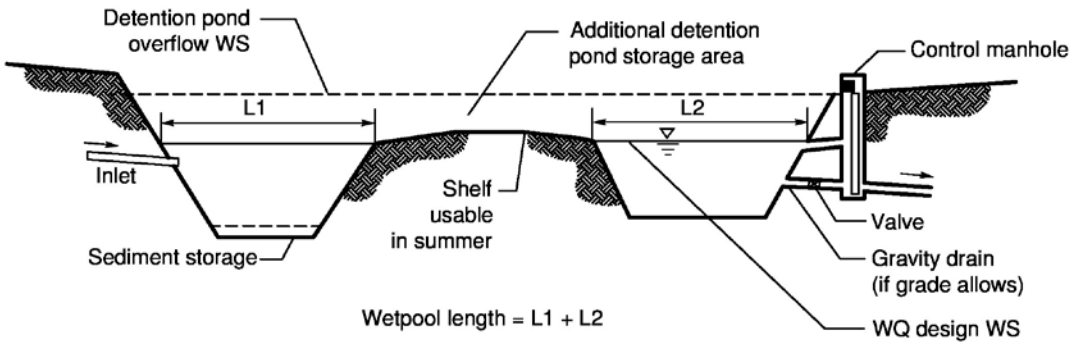

SECTION VIEW
NTS

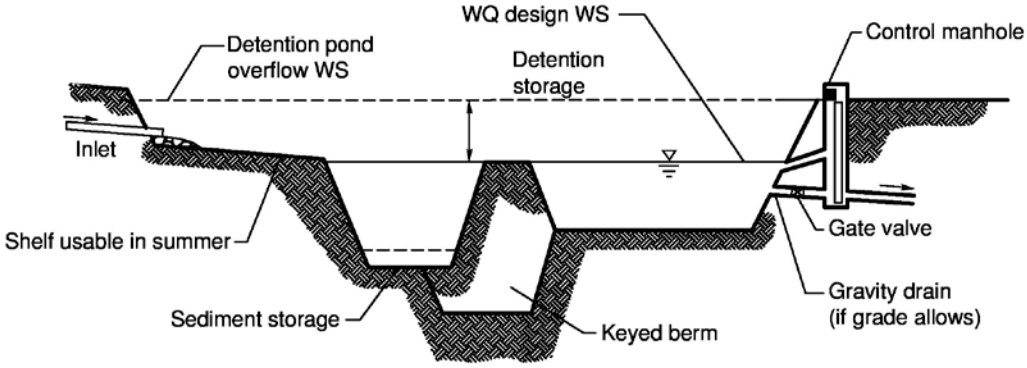

SECTION VIEW
NTS

Note: These examples show how the combined detention/wetpool can be configured to allow for "shelves" for joint use opportunities in dry weather. Other options may also be acceptable.

Figure 10.3.11 – Alternative Configurations of Detention and Wetpool Areas

Inlet and Outlet

The "Inlet and Outlet" criteria for wetponds shall apply with the following modifications:

- A sump must be provided in the outlet structure of combined ponds.
- The detention flow restrictor and its outlet pipe shall be designed according to the requirements for detention ponds (see Volume III).

Access and Setbacks

Same as for wetponds.

Planting Requirements

Same as for wetponds.

Combined Detention and Wetvault

The sizing procedure for combined detention and wetvaults is identical to those outlined for wetvaults and for detention facilities. The wetvault volume for a combined facility shall be equal to or greater than the total volume of runoff from the 6-month, 24-hour storm event. Alternatively, use the Water Quality Design Storm Volume estimated by an approved continuous runoff model to size the wetpool portion of vault. Follow the standard procedure specified in Volume 3 and guidance documents for use of an approved continuous runoff model to size the detention portion of the vault.

The design criteria for detention vaults and wetvaults must both be met, except for the following modifications or clarifications:

- The minimum sediment storage depth in the first cell shall average 1-foot. The 6 inches of sediment storage required for detention vaults does not need to be added to this, but 6 inches of sediment storage must be added to the second cell to comply with detention vault sediment storage requirements.
- The oil retaining baffle shall extend a minimum of 2 feet below the WQ design water surface.

Intent: The greater depth of the baffle in relation to the WQ design water surface compensates for the greater water level fluctuations experienced in the combined vault. The greater depth is deemed prudent to better ensure that separated oils remain within the vault, even during storm events.

Note: If a vault is used for detention as well as water quality control, the facility may not be modified to function as a baffle oil/water separator as allowed for wetvaults in BMP T10.20. This is because the added pool fluctuation in the combined vault does not allow for the quiescent conditions needed for oil separation.

Combined Detention and Stormwater Wetland

The sizing procedure for combined detention and stormwater wetlands is identical to those outlined for stormwater wetlands and for detention facilities. Follow the procedure specified in BMP T10.30 to determine the stormwater wetland size. Follow the standard procedure specified in Volume III to size the detention portion of the wetland.

The design criteria for detention ponds and stormwater wetlands must both be met, except for the following modifications or clarifications:

- The "Wetland Geometry" criteria for stormwater wetlands (see BMP T10.30) are modified as follows:
- The minimum sediment storage depth in the first cell is 1-foot. The 6 inches of sediment storage required for detention ponds does not need to be added to this, nor does the 6 inches of sediment storage in the second cell of detention ponds need to be added.

Intent: Since emergent plants are limited to shallower water depths, the deeper water created before sediments accumulate is considered detrimental to robust emergent growth. Therefore, sediment storage is confined to the first cell which functions as a presettling cell.

The "Inlet and Outlet" criteria for wetponds shall apply with the following modifications:

- A sump must be provided in the outlet structure of combined facilities.
- The detention flow restrictor and its outlet pipe shall be designed according to the requirements for detention ponds (see Volume III).

The "Planting Requirements" for stormwater wetlands are modified to use the following plants which are better adapted to water level fluctuations:

Scirpus acutus (hardstem bulrush)	2 - 6' depth
Scirpus microcarpus (small-fruited bulrush)	1 - 2.5' depth
Sparganium emersum (burreed)	1 - 2' depth
Sparganium eurycarpum (burreed)	1 - 2' depth
Veronica sp. (marsh speedwell)	0 - 1' depth

In addition, the shrub Spirea douglasii (Douglas spirea) may be used in combined facilities.

Water Level Fluctuation Restrictions: The difference between the WQ design water surface and the maximum water surface associated with the 2-year runoff shall not be greater than 3 feet. If this restriction cannot be met, the size of the stormwater wetland must be increased. The additional area may be placed in the first cell, second cell, or both. If placed in the second cell, the additional area need not be planted with wetland vegetation or counted in calculating the average depth.

Intent: This criterion is designed to dampen the most extreme water level fluctuations expected in combined facilities to better ensure that fluctuation-tolerant wetland plants will be able to survive in the facility. It is not intended to protect native wetland plant communities and is not to be applied to natural wetlands.

This page purposely left blank

Chapter 11. - Oil and Water Separators

This chapter provides a discussion of oil and water separators, including their application and design criteria. BMPs are described for baffle type and coalescing plate separators.

11.1 Purpose of Oil and Water Separators

To remove oil and other water-insoluble hydrocarbons, and settleable solids from stormwater runoff.

11.2 Description

Oil and water separators are typically the American Petroleum Institute (API) (also called baffle type) (American Petroleum Institute, 1990) or the coalescing plate (CP) type using a gravity mechanism for separation. See Figures 11.2.1 and 11.2.2. Oil removal separators typically consist of three bays; forebay, separator section, and the afterbay. The CP separators need considerably less space for separation of the floating oil due to the shorter travel distances between parallel plates. A spill control (SC) separator (Figure 11.2.3) is a simple catchbasin with a T-inlet for temporarily trapping small volumes of oil. The spill control separator is included here for comparison only and is not designed for, or to be used for treatment purposes.

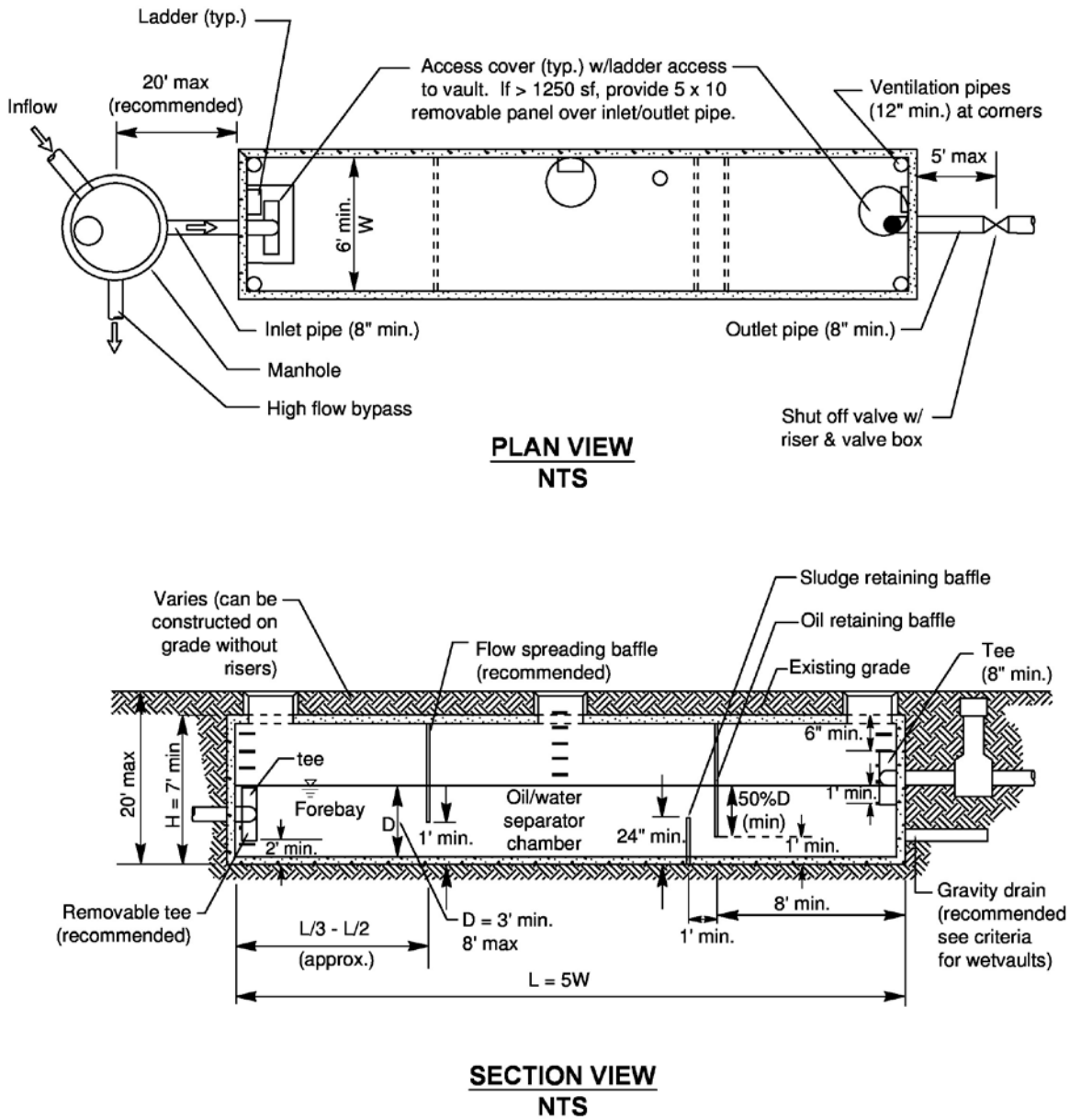

Figure 11.2.1 – API (Baffle Type) Separator

Source: King County (reproduced with permission)

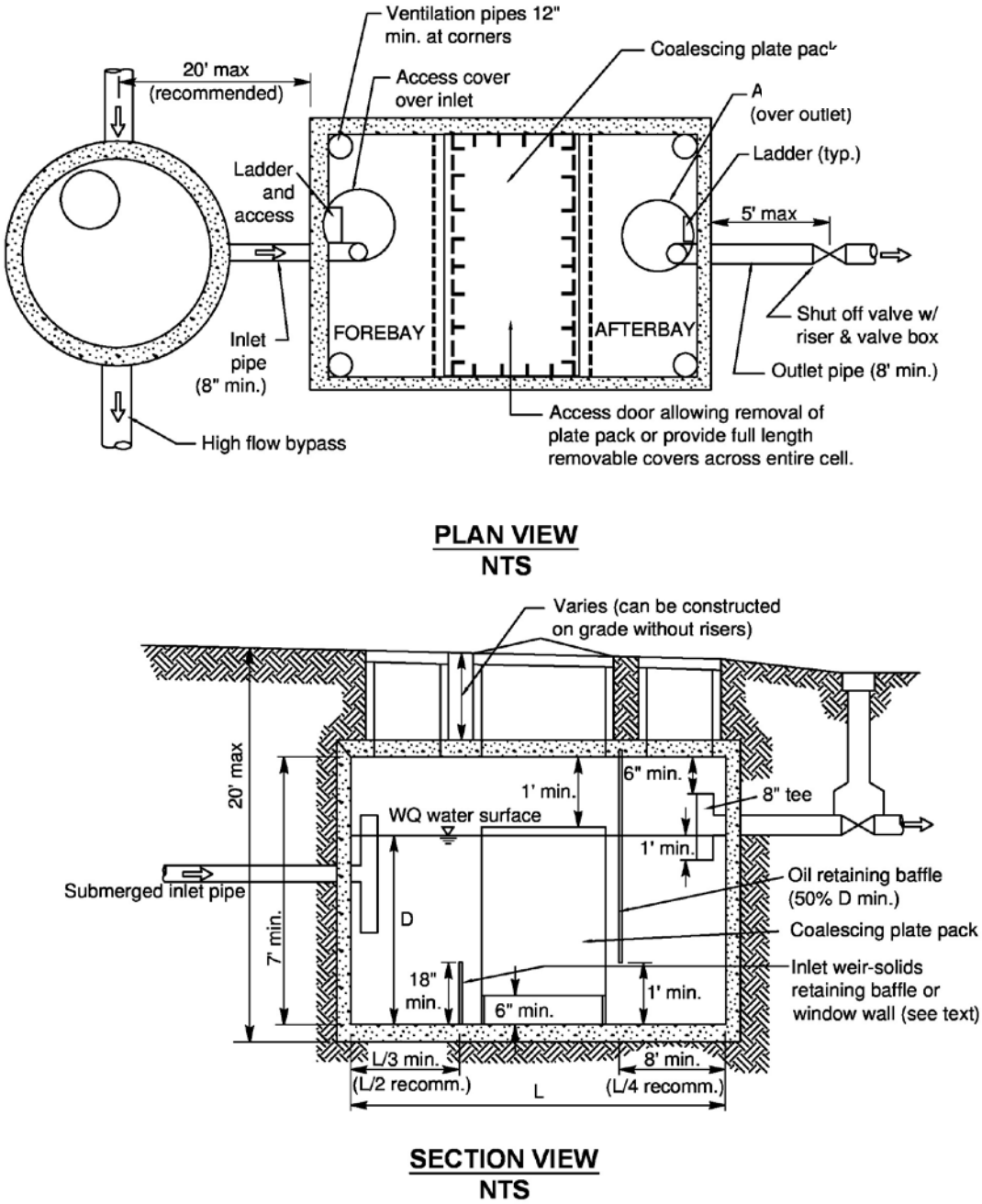

Figure 11.2.2 – Coalescing Plate Separator

Source: King County (reproduced with permission)

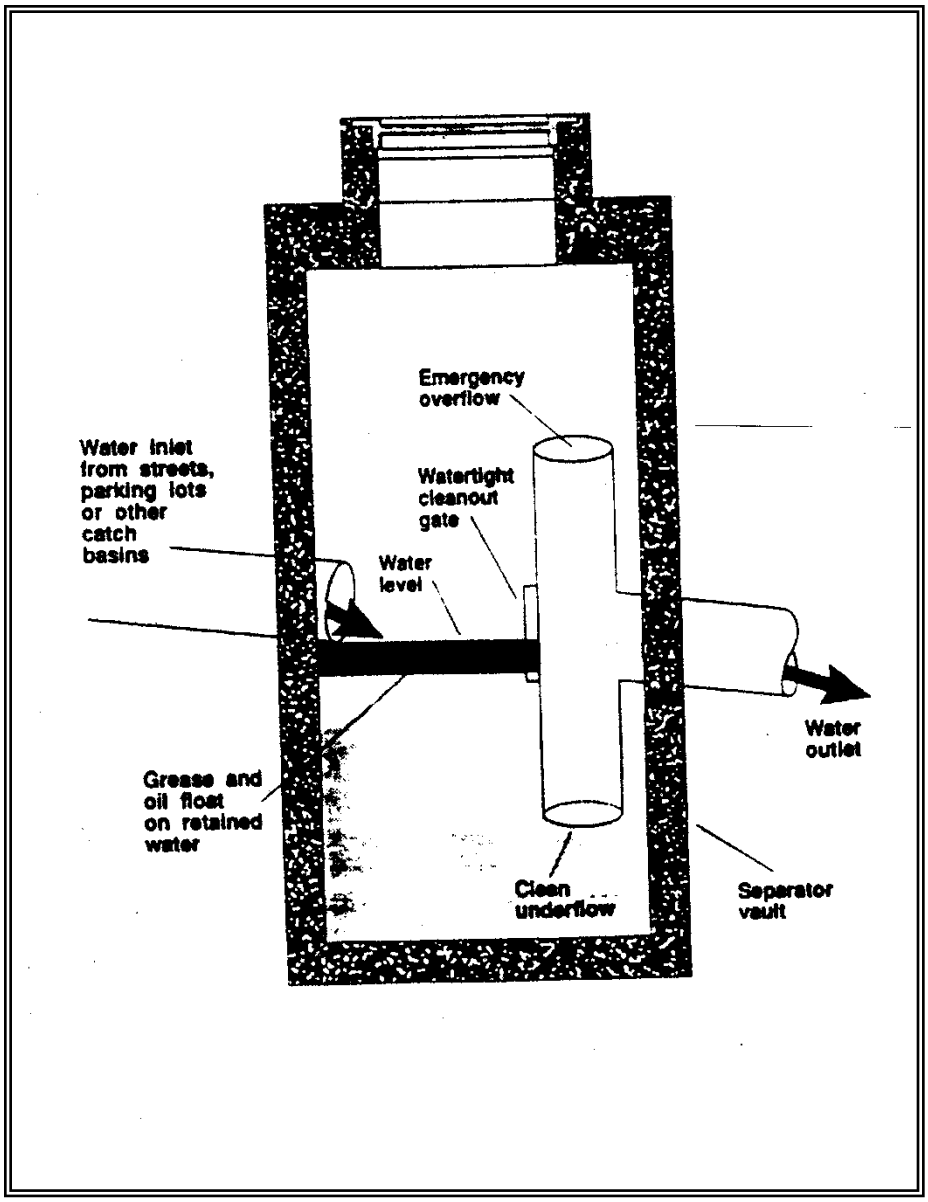

Figure 11.2.3 – Spill Control Separator (not for oil treatment)

Source: 1992 Ecology Manual

11.3 Performance Objectives

Oil and water separators should be designed to remove oil and TPH down to 15 mg/L at any time and 10 mg/L on a 24-hr average, and produce a discharge that does not cause an ongoing or recurring visible sheen in the stormwater discharge, or in the receiving water. (See also Chapter 3)

11.4 Applications/Limitations

The following are potential applications of oil and water separators where free oil is expected to be present at treatable high concentrations and sediment will not overwhelm the separator. (Seattle METRO, 1990; Watershed Protection Techniques, 1994; King County Surface Water Management, 1998) For low concentrations of oil, other treatments may be more applicable. These include sand filters and emerging technologies.

- Commercial and industrial areas including petroleum storage yards, vehicle maintenance facilities, manufacturing areas, airports, utility areas (water, electric, gas), and fueling stations.(King County Surface Water Management, 1998)
- Facilities that would require oil control BMPs under the high-use site threshold described in Chapter 2 including parking lots at convenience stores, fast food restaurants, grocery stores, shopping malls, discount warehouse stores, banks, truck fleets, auto and truck dealerships, and delivery services. (King County Surface Water Management, 1998)
- Without intense maintenance oil/water separators may not be sufficiently effective in achieving oil and TPH removal down to required levels.
- Pretreatment should be considered if the level of TSS in the inlet flow would cause clogging or otherwise impair the long-term efficiency of the separator.
- For inflows from small drainage areas (fueling stations, maintenance shops, etc.) a coalescing plate (CP) type separator is typically considered, due to space limitations. However, if plugging of the plates is likely, then a new design basis for the baffle type API separator may be considered on an experimental basis. (See 11.6 Design Criteria)

11.5 Site Suitability

Consider the following site characteristics:

- Sufficient land area
- Adequate TSS control or pretreatment capability
- Compliance with environmental objectives
- Adequate influent flow attenuation and/or bypass capability

Sufficient access for operation and maintenance (O & M)

11.6 Design Criteria-General Considerations

There is concern that oil/water separators used for stormwater treatment have not performed to expectations (Watershed Protection Techniques, 1994; Schueler, Thomas R., 1992). Therefore, emphasis should be given to proper application (see Section 11.4), design, O & M, (particularly sludge and oil removal) and prevention of CP fouling and plugging (US Army of Engineers, 1994). Other treatment systems, such as sand filters and emerging technologies, should be considered for the removal of insoluble oil and TPH.

The following are design criteria applicable to API and CP oil/water separators:

- If practicable, determine oil/grease (or TPH) and TSS concentrations, lowest temperature, pH; and empirical oil rise rates in the runoff, and the viscosity, and specific gravity of the oil. Also determine whether the oil is emulsified or dissolved. (Washington State Department of Ecology, 1995). Do not use oil/water separators for the removal of dissolved or emulsified oils such as coolants, soluble lubricants, glycols, and alcohols.
- Locate the separator off-line and bypass the incremental portion of flows that exceed the off-line 15-minute, Water Quality design flow rate multiplied by the ratio indicated in Figure 9.4.6b of this Volume. If it is necessary to locate the separator on-line, try to minimize the size of the area needing oil control, and use the on-line water quality design flow rate multiplied by the ratio indicated in Figure 9.4.6a.
- Use only impervious conveyances for oil contaminated stormwater.
- Specify appropriate performance tests after installation and shakedown, and/or certification by a professional engineer that the separator is functioning in accordance with design objectives. Expeditious corrective actions must be taken if it is determined the separator is not achieving acceptable performance levels.

- Add pretreatment for TSS that could cause clogging of the CP separator, or otherwise impair the long-term effectiveness of the separator.

Criteria for Separator Bays:

- Size the separator bay for the Water Quality design flow rate (15 minute time step) x a correction factor ratio indicated in Figure 9.4.6b of this Volume (assuming an off-line facility). (See Chapter 4 of this Volume for a definition of the Water Quality Design Flow Rate.)
- To collect floatables and settleable solids, design the surface area of the forebay at ≥ 20 ft^2 per 10,000 ft^2 of area draining to the separator [(6)]. The length of the forebay should be 1/3-1/2 of the length of the entire separator. Include roughing screens for the forebay or upstream of the separator to remove debris, if needed. Screen openings should be about 3/4 inch.
- Include a submerged inlet pipe with a turn-down elbow in the first bay at least two feet from the bottom. The outlet pipe should be a Tee, sized to pass the design peak flow and placed at least 12 inches below the water surface.
- Include a shutoff mechanism at the separator outlet pipe. (King County Surface Water Management, 1998)
- Use absorbents and/or skimmers in the afterbay as needed.

Criteria for Baffles:

- Oil retaining baffles (top baffles) should be located at least at 1/4 of the total separator length from the outlet and should extend down at least 50% of the water depth and at least 1 ft. from the separator bottom.
- Baffle height to water depth ratios should be 0.85 for top baffles and 0.15 for bottom baffles.

11.7 Oil and Water Separator BMPs

Two BMPs are described in this section. BMP T11.10 for baffle type separators, and BMP T11.11 for coalescing plate separators.

BMP T11.10: API (Baffle type) Separator Bay

Design Criteria

The criteria for small drainages is based on V_h, V_t, residence time, width, depth, and length considerations. As a correction factor API's turbulence criteria is applied to increase the length.

Ecology is modifying the API criteria for treating stormwater runoff from small drainage area (fueling stations, commercial parking lots, etc.) by using the design hydraulic horizontal velocity, V_h, for the design V_h/V_t ratio rather than the API minimum of $V_h/V_t = 15$. The API criteria appear applicable for greater than two acres of impervious drainage area. Performance verification of this design basis must be obtained during at least one wet season using the test protocol referenced in Chapter 12 for new technologies.

The following is the sizing procedure using modified API criteria:

- Determine the oil rise rate, V_t, in cm/sec, using Stokes Law (Water Pollution Control Federation, 1985), or empirical determination, or 0.033 ft./min for 60μ oil. The application of Stokes' Law to site-based oil droplet sizes and densities, or empirical rise rate determinations recognizes the need to consider actual site conditions. In those cases the design basis would not be the 60 micron droplet size and the 0.033 ft/min. rise rate.
- Stokes Law equation for rise rate, V_t (cm/sec):

  $$Vt = [(g)(\rho_w - \rho_o)(d^2)] / [(18*\mu_w)]$$

  Where:

  Vt = the rise rate of the oil droplet (cm/s or ft/sec)
  g = acceleration due to gravity (cm/s² or ft/s²)
  ρ_w = density of water at the design temperature (g/cm³ or lbm/ft³)
  ρ_o = density of oil at the design temperature (g/cm³ or lbm/ft³)
  d = oil droplet diameter (cm or ft)
  μ_w = absolute viscosity of the water [(g/(cm*s) or lbm/(ft*s)])

Use the following separator dimension criteria:

Separator water depth, d ≥3≤8 feet (to minimize turbulence) (American Petroleum Institute, 1990; US Army Corps of Engineers, 1994).

Separator width, 6-20 feet (WEF & ASCE, 1998; King County Surface Water Management, 1998)

Depth/width (d/w) of 0.3-0.5 (American Petroleum Institute, 1990)

For Stormwater Inflow from Drainages under 2 Acres:

1. Determine V_t and select depth and width of the separator section based on above criteria.
2. Calculate the minimum residence time (t_m) of the separator at depth d:

$$t_m = d/V_t$$

3. Calculate the horizontal velocity of the bulk fluid, V_h, vertical cross-sectional area, A_v, and actual design V_h/V_t (American Petroleum Institute, 1990; US Army Corps of Engineers, 1994).

   $V_h = Q/dw = Q/A_v$ (V_h maximum at < 2.0 ft/min.)(American Petroleum Institute, 1990)

   Q = (k) the ratio indicated in Figure 9.4.~~5~~6.a (for on-line facilities) or Figure 9.4.6.b (for offline facilities) for the site location multiplied by the 15-minute Water Quality design flow rate in ft^3/min, at minimum residence time, t_m

   At V_h/V_t determine F, turbulence and short-circuiting factor (Appendix V-D) API F factors range from 1.28-1.74. (American Petroleum Institute, 1990)

4. Calculate the minimum length of the separator section, l(s), using:

   $l(s) = FQt_m/wd = F(V_h/V_t)d$
   $l(t) = l(f) + l(s) + l(a)$
   $l(t) = l(t)/3 + l(s) + l(t)/4$

   Where:

   l(t) = total length of 3 bays = "L" in Figure 11.2.1
   l(f) = length of forebay
   l(a) = length of afterbay

5. Calculate $V = l(s)wd = FQt_m$, and $A_h = wl(s)$

   V = minimum hydraulic design volume
   A_h = minimum horizontal area of the separator

For Stormwater Inflow from Drainages > 2 Acres: Use $V_h = 15\ V_t$ and $d = (Q/2V_h)^{1/2}$ (with d/w = 0.5) and repeat above calculations 3- 5.

BMP T11.11: Coalescing Plate (CP) Separator Bay

Design Criteria

Calculate the projected (horizontal) surface area of plates needed using the following equation:

$A_h = Q/Vt = [Q] / [(.00386) * ((S_w - S_o)/(\mu_w))]$

Where

A_h = horizontal surface area of the plates (ft^2)
Vt = rise rate of the oil droplet (ft/min)
Q = design flowrate (ft^3/min)
S_w = specific gravity of water at the design temperature
S_o = specific gravity of oil at the design temperature
μ_w = absolute viscosity of the water (poise)

The above equation is based on an oil droplet diameter of 60 microns.

- Plate spacing should be a minimum of 3/4 in (perpendicular distance between plates) or as determined by the manufacturer. (WEF & ASCE, 1998; US Army Corps of Engineers, 1994; US Air Force, 1991; Jaisinghani, R., 1979)
- Select a plate angle between 45° to 60° from the horizontal.
- Locate plate pack at least 6 inches from the bottom of the separator for sediment storage
- Add 12 inches minimum head space from the top of the plate pack and the bottom of the vault cover.
- Design inlet flow distribution and baffles in the separator bay to minimize turbulence, short-circuiting, and channeling of the inflow especially through and around the plate packs of the CP separator. The Reynolds Number through the separator bay should be <500 (laminar flow).
- Include forebay for floatables and afterbay for collection of effluent. (WEF & ASCE, 1998)
- The sediment-retaining baffle must be upstream of the plate pack at a minimum height of 18 in. (King County Surface Water Management, 1998).
- Design plates for ease of removal, and cleaning with high-pressure rinse or equivalent.

Operation and Maintenance

- Prepare, regularly update, and implement an O & M Manual for the oil/water separators.
- Inspect oil/water separators monthly during the wet season of October 1-April 30 (WEF & ASCE, 1998; Woodward-Clyde Consultants) to

ensure proper operation, and, during and immediately after a large storm event of ≥1 inch per 24 hours.

- Clean oil/water separators regularly to keep accumulated oil from escaping during storms. They must be cleaned by October 15 to remove material that has accumulated during the dry season (Woodward-Clyde Consultants), after all spills, and after a significant storm. Coalescing plates may be cleaned in-situ or after removal from the separator. An eductor truck may be used for oil, sludge, and washwater removal. (King County Surface Water Management, 1998) Replace wash water in the separator with clean water before returning it to service.
- Remove the accumulated oil when the thickness reaches 1-inch. Also remove sludge deposits when the thickness reaches 6 inches (King County Surface Water Management, 1998).
- Replace oil absorbent pads before their sorbed oil content reaches capacity.
- Train designated employees on appropriate separator operation, inspection, record keeping, and maintenance procedures.

This page purposely left blank

Chapter 12. - Emerging Technologies

12.1 Background

Traditional best management practices (BMPs) such as wetponds and filtration swales may not be appropriate in many situations due to size and space restraints or their inability to remove target pollutants. Because of this, the stormwater treatment industry emerged to develop new stormwater treatment devices.

Emerging technologies are stormwater treatment devices that are new to the stormwater treatment marketplace. These devices include both permanent and construction site treatment technologies. Many of these devices have not undergone complete performance testing so their performance claims cannot be verified.

12.2 Ecology Role in Evaluating Emerging Technologies

To aid local governments in selecting new stormwater treatment technologies Ecology developed the Technology Assessment Protocol – Ecology (TAPE) and Chemical Technology Assessment Protocol Ecology (CTAPE) protocols. These protocols provide manufacturers with guidance on stormwater monitoring so they may verify their performance claims.

As a part of this process Ecology:

- Posts information on emerging technologies at the emerging technologies website: http://www.ecy.wa.gov/programs/wq/stormwater/newtech/index.html
- Participates in all Technical Review Committee (TRC) and Chemical Technical Review Committee (CTRC) activities which include reviewing manufacturer performance data and providing recommendations on use level designations.
- Grants use level designations based on performance and other pertinent data submitted by the manufacturers and vendors.
- Provides oversight and analysis of all submittals to ensure consistency with this manual.

12.3 Evaluation of Emerging Technologies

Local governments should consider the following as they make decisions concerning the use of new stormwater treatment technologies in their jurisdiction:

Remember the Goal:

The goal of any stormwater management program or BMP is to treat and release stormwater in a manner that does not harm beneficial uses.

Exercise Reasonable Caution:

- Before allowing the use of a new technology, the local government should review evaluation information based on the TAPE or CTAPE.
- An emerging technology cannot be used for new or redevelopment unless this technology has a use level designation. Having a use level designation means that Ecology and the TRC or CTRC reviewed system performance data and believe the technology has the ability to provide the level of treatment claimed by the manufacturer.
- To achieve the goals of the Clean Water Act and the Endangered Species Act, local governments may find it necessary to retrofit stormwater pollutant control systems for many existing stormwater discharges. In retrofit situations, the use of any BMP that makes substantial progress toward these goals is a step forward and encouraged by Ecology. To the extent practical, the performance of BMPs used in retrofit situations should be evaluated using the TAPE or CTAPE protocols.

12.4 Assessing Levels of Development of Emerging Technologies

Ecology developed use level designations to assess levels of development for emerging technologies. The use level designations are based upon the quantity, quality, and type of performance data. There are three use level designations: pilot use level designation, conditional use level designation, and general use level designation.

Pilot Use Level Designation (PULD)

For technologies that have limited performance data, the pilot use level designation allows limited use to conduct field-testing. Ecology may give Pilot use level designations based solely on laboratory performance data. Pilot use level designations apply for a specified time period only. During this time period, the proponent must complete all field testing and submit a technology evaluation report (TER) to Ecology.

PULD technologies may be installed at sites that are pre-approved by Ecology and the local government with jurisdiction provided that the

vendor and/or developer agree to conduct field testing based on TAPE requiremements. Ecology will limit the number of installations to five during the pilot use level period and the manufacture must monitor all five sites. Local governments should not approve technologies that have a PULD for a new or redevelopment project unless Ecology has concurred in the use of the technology at that project site.

Please note: Government entities covered by a municipal stormwater NPDES permit must notify Ecology when a PULD technology is proposed (form is available in TAPE guidance document, at: www.ecy.wa.gov/biblio/1110061.html)

Conditional Use Level Designation (CULD)

Ecology established the CULD for emerging technologies that have considerable performance data not collected per the TAPE protocol. Ecology may give a conditional use level designation if a manufacture collected field data through a protocol reasonably consistent with but not fully meeting the TAPE protocol. The field data must meet the statistical goals set out in the TAPE guidelines (See www.ecy.wa.gov/pubs/1110061.pdf). Manufactures may use laboratory data to supplement field data. Ecology will allow the use of Technologies that receive a CULD for a specified time, during which the manufacture must complete the field testing necessary to obtain a general use level designation (GULD) and must submit a TER to Ecology and the TRC. Ecology limits the number of installations to ten during the CULD period.

General Use Level Designation (GULD)

The general use level designation (GULD) confers a general acceptance for the specified applications (land uses). Technologies with a GULD may be used for new development, re-development, or retrofit situations anywhere in Washington, subject to conditions that Ecology places within the Use Designation document.

12.5 Emerging Technologies for Stormwater Treatment and Control Options

Ecology's Emerging Technologies website: www.ecy.wa.gov/programs/wq/stormwater/newtech/index.html

lists technologies that have obtained a use level designation through the Technology Assessment Protocol – Ecology (TAPE) process. Ecology's website also provides additional guidance regarding the TAPE process and application forms.

In addition to Ecology certification, local jurisdiction approval is required for installation of treatment technologies with Pilot (PULD), Conditional (CULD), or General (GULD) Use Level Designations. Local jurisdictions

may choose not to accept products approved through TAPE, or may require additional testing prior to consideration for local approval.

In addition to other requirements, Ecology uses the goals below to evaluate emerging stormwater treatment technologies. Proponents attempting to obtain a GULD for a stormwater treatment technology must demonstrate the achievement of applicable performance goals by monitoring the water quality parameters listed in Table 12.5.1.

The following subheadings link to menus of emerging treatment technologies that have completed or are engaged in the TAPE program.

Pretreatment

Pretreatment is generally applied to:

- Project sites using infiltration treatment.
- Treatment systems needed to assure and extend performance of the downstream basic or enhanced treatment facility.

Pretreatment Performance Goal: For influent concentrations ranging:

- Less than 100 mg/L: achieve effluent goals of 50 mg/L of fine and 20 mg/L of coarse total suspended solids.
- Greater than 100 mg/L, but less than 200 mg/L: achieve 50% removal of fine (50 micron-mean size) and 80% removal of coarse (125-micron-mean size) total suspended solids.

Oil Treatment

Oil treatment Performance Goal: Achieve no ongoing or recurring visible sheen and a daily average total petroleum hydrocarbon concentration no greater than 10 mg/L with a maximum of 15 mg/L for discrete (grab) samples.

Basic Treatment

Basic treatment Effluent Goals: For influent concentrations ranging:

- Less than 100mg/L: achieve an effluent of 20mg/L total suspended solids.
- From 100mg/L to 200 mg/L: achieve 80% removal of total suspended solids.
- Greater than 200mg/L: achieve more than 80% removal of total suspended solids.

Ecology has also approved technologies listed in this section with a GULD for Pre-treatment in accordance with Section 6.2.

Enhanced Treatment

Enhanced Performance Treatment Goal: Achieve a higher level of treatment than basic treatment. For influent concentrations ranging:

- Dissolved copper 0.005 - 0.02 mg/L: meet basic treatment goal and better than basic treatment currently defined as > 30% dissolved copper removal.
- Dissolved zinc 0.02 - 0.3 mg/L: meet basic treatment goal and better than basic treatment currently defined as > 60% dissolved zinc removal.

Phosphorous Treatment

Phosphorus Performance Treatment Goal: Achieve 50% total phosphorus removal for an influent concentration range of 0.1 to 0.5 mg/L and achieve basic treatment goals.

Construction Site Treatments

Construction Performance Treatment Goal: Achieve a maximum of 5 NTUs above background (background of 50 NTUs or less), not more than 10% increase in turbidity where background is greater than 50 NTUs, pH of 6.5-8.5 in freshwater and 7.0-8.5 in marine water, and no visible oil sheen.

Table 12.5.1 TAPE Treatment Goals and Water Quality Parameters

Performance Goal	Influent Range	Criteria	Required Water Quality Parameters
Basic Treatment	20-100 mg/L TSS	Effluent goal ≤ 20 mg/L TSS [a]	TSS
	100-200 mg/L TSS	≥ 80% TSS removal [b]	
	> 200 mg/L TSS	> 80% TSS removal [b]	
Dissolved Metals Treatment [c]	Dissolved copper 0.005 – 0.02 mg/L	Must meet basic treatment goal and better than basic treatment currently defined as > 30% dissolved copper removal [b,d]	TSS, hardness, total and dissolved Cu and Zn
	Dissolved zinc 0.02 – 0.3 mg/L	Must meet basic treatment goal and better than basic treatment currently defined as > 60% dissolved zinc removal [b,d]	
Phosphorus Treatment	Total phosphorus (TP) 0.1 to 0.5 mg/L	Must meet basic treatment goal and exhibit ≥ 50% TP removal [b]	TSS, TP, orthophosphate
Oil Treatment	Total petroleum hydrocarbons (TPH) > 10 mg/L [e]	1) No ongoing or recurring visible sheen in effluent 2) Daily average effluent TPH concentration < 10 mg/L [a,e] 3) Maximum effluent TPH concentration of 15 mg/L [a,e] for a discrete (grab) sample	NWTPH-Dx, visible sheen
Pretreatment [f]	50-100 mg/L TSS	Effluent goal ≤ 50 mg/L TSS [a]	TSS
	≥ 100 mg/L TSS	> 50% TSS removal [b]	

mg/L – milligrams per liter
Cu – copper
NWTPH-Dx – Northwest Total Petroleum Hydrocarbons-Motor Oil and Diesel fractions
TP – total phosphorus
TPH – total petroleum hydrocarbons
TSS – total suspended solids
Zn – zinc

[a] The upper one-sided 95 percent confidence interval around the mean effluent concentration for the treatment system being evaluated must be lower than this performance goal to meet the performance goal with the required 95 percent confidence.

[b] The lower one-sided 95 percent confidence interval around the mean removal efficiency for the treatment system being evaluated must be higher than this performance goal to meet the performance goal with the required 95 percent confidence.

[c] Referred to as Enhanced Treatment in the *Stormwater Management Manual for Western Washington* (Ecology 2005) and Metals Treatment in the *Stormwater Management Manual for Eastern Washington* (Ecology 2004b). Must meet the removal goal for both dissolved copper and dissolved zinc in order to achieve a Dissolved Metals Treatment GULD. Meeting the removal goal for only one of these dissolved metals is not sufficient.

[d] This percent removal was determined based on an analysis of basic treatment BMP dissolved metals removal data from the International Stormwater BMP database to define performance goals for dissolved metals treatment (Washington Stormwater Center and Herrera 2011). Data from the International Stormwater BMP database was reviewed and screened based on influent concentrations, geographic location, data quality, BMP design, and monitoring problems to develop a subset of data that was representative and suitable for determining BMP performance.

[e] This performance goal should be evaluated based on the motor oil fraction of TPH-Dx only.

[f] Pretreatment technologies generally apply to (1) project sites using infiltration treatment and (2) treatment systems where pretreatment is needed to ensure and extend performance of the downstream basic or dissolved metals treatment facilities.

Volume V References

Allen, Tony (Recommendations by) -Geotechnical Engineer, WSDOT, 1999

American Petroleum Institute, “Design and Operation of Oil-Water Separators,” Publication 421, Feb. 1990.

APWA Task Committee, "Protocol for the Acceptance of Unapproved Stormwater Treatment Technologies for Use in the Puget Sound Watershed, November 1999.

Aquashield Inc., "Aquafilter Stormwater Filtration System", 2000.

ASCE and WEF, Urban Runoff Quality Management, WEF Manual of Practice No. 23, 1998.

Caraco, Deborah and Richard Claytor, Stormwater BMP Design Supplement for Cold Climates, Center for Watershed Protection, December 1997.

Center for Watershed Protection, “Better Site Design”, August 1998.

Chang, George, C., “Review of Stormwater Manual-Sand Filtration Basins for Department of Ecology, State of Washington”, November 5, 2000.

Chin, D. A. Water Resources Engineering, Prentice Hall, New Jersey, 2000.

Chow, V.T., "Open Channel Hydraulics", McGraw-Hill Book Co., New York, 1959.

City of Austin, Texas. Design Guidelines for Water Quality Control Basins, Environmental Criteria Manual, June 1988.

Claytor, Richard and Thomas Schueler, Design of Stormwater Filter Systems, December 1996

Colwell, S.R., “Characterization of Performance Predictors and Evaluation of Mowing Practices in Biofiltration Swales.” MSCE Thesis, U. of Washington, 2000.

Corbitt, Robert A., “Oil and Grease Removal,” Handbook of Environmental Engineering, McGraw-Hill, Inc., 1990.

CSR-HydroConduit, "The Stormceptor System Technical Manual", 1997.

Ferguson, Bruce K., Stormwater Infiltration, Lewis Publishers, 1994.

Ferguson, Bruce K., Review of Draft Stormwater Manual for Western Washington (Infiltration Sections of Volume III and Volume V), October 2000.

Goldman, S.J., K. Jackson and T.A. Bursztynsky, "Erosion and Sediment Control Handbook” McGraw-Hill Book Co., New York, 1986.

H.I.L. Technology, Inc.," Downstream Defender", 1998.

Horner, R., "Fundamentals of Urban Runoff Management-Technical and Institutional Issues", 1994.

Horner, Richard “Review of Stormwater Manual.” October 23, 2000.

Jaisinghani, R., A., et. al., “A Study of Oil/Water Separation in Corrugated Plate Separators,” Journal of Engineering for Industry, 11/79.

King County Surface Water Management, “High Use/Oil Control Decision Paper,” Draft, 1994.

King County Surface Water Management, Design Manual, September, 1998.

King County Surface Water Management, WA, “Draft Guidelines for Full-Scale Infiltration Facility Testing”, February, 2001.

Koon, John, “Evaluation of Water Quality Ponds and Swales in the Issaquah/East Sammamish Basins”, King County Surface Water Management, 1995.

Koon, John, et al, "Evaluation of Commercial-Available Catch basin Inserts for the Treatment of Stormwater Runoff from Developed Sites", Interagency Catch basin Insert Committee, 1995.

Kulzer, Louise and Horner, Richard, et. al., “Biofiltration Swale Performance, Recommendations, and Design Considerations”, Municipality of Metropolitan Seattle. Publication 657, October 1992

Lambert, C., "Stormceptor", CSR, Inc., July 2000.

Lee, D., T.A. Dillaha and J.H. Sherrard, "Modeling Phosphorus Transport in Grass Buffer Strips.” Journal of Environmental Engineering, Volume 115, No. 2, New York, N.Y., April, 1989.

Leif, Bill, "Compost Stormwater Filter Evaluation", January 1999.

Leif, William, "Sediment Removal in Catch Basin Inserts", Snohomish County, March 1998.

Massmann, Joel and Carolyn Butchart. Infiltration Characteristics, Performance, and Design of Storm Water Facilities, U. of Washington, March 2000.

Mazer, Greg, “Environmental Limitations to Vegetation Establishment and Growth in Vegeteted Stormwater Biofilters.” University of Washington, July 1998.

Minton, Gary, “Planning Report No. 3: Sizing Oil/Water Separators for the Redmond Way Storm Drain System”, Resource Planning Associates, 1990.

Minton, G., The Selection and Sizing of Treatment BMPs in New Developments to Achieve Water Quality Objectives, March 1993.

No. Carolina DEHNR," Stormwater Best Management Practices", November 1995.

Rawls, W. J., D. L. Brakensiek, and K. E. Saxton. Estimation of Soil Properties. Transactions of the American Society of Agricultural Engineers, Vol. 25, No. 5, pp. 1316-1320, 1982.

Schueler, Thomas R., “Water Quality inlets/Oil Grit Separators,” BMP Fact Sheet #11, Current Assessment of Urban Best Management Practices, March 1992.

Schueler, Tom, et. al., “A Current Assessment of Urban Best Management Practices”, March 1992.

Seattle METRO, “Oil and Water Don’t Mix,” October 1990.

Shaver, Earl, Sand Filter Design for Water Quality Treatment, Delaware Department of Natural Resources and Environmental Control, 1992.

SPE Production Engineering, “Droplet-Settling vs. Retention-Time Theories for Sizing Oil/Water Separator,” Kenneth Arnold, et. al., February 1990.

Stenstrom, Michael, et. al., “Oil and Grease in Urban Stormwater,” 1983 paper for publication in Journal of Environ. Engineering.

Stormwater Management Co., "Stormfilter Product Manual", 1999.

Strynchuk, Justin, et al, "The Use of a CDS Unit for Sediment Control in Brevard County, April, 2000.

Sutherland, Roger, et al, "High Efficiency Sweeping as an Alternative to the Use of Wet Vaults for Stormwater Treatment," 1998.

Thurston County Environmental Health, “Oil/Water Separator Fact Sheet,” circa 1995.

U.S. Air Force, “Gravity Oil and Water Separator Design Criteria,” circa 1991.

U.S. Army Corps. of Engineers, “Selection and Design of Oil and Water Separators,” August 26, 1994.

U.S. Army Corps. of Engrs., “Prefabricated Oil-Water Separators,” Draft Specifications, 1995.

U.S. Dept. of Commerce, Bureau of Public Roads, "Design Charts for Open-Channel Flow, Hydraulic Design Series 3", Washington, D.C., 1961.

Urbonas, Ben, Hydraulic Design of Sand Filters for Stormwater Quality, 1997.

USEPA, “Stormwater BMP Design Supplement for Cold Climates”, December 1997.

Varner, Phyllis, et al, "Lakemont Stormwater Treatment Facility Monitoring Report," City of Bellevue, November 1999.

Wa. Dept. of Ecology, “NPDES and State Waste Discharge General Permit for Stormwater Discharges Associated with Industrial Activities,” October 21, 2009.

Wang T.S., D.E. Spyridakis, B.W. Mar, and R.R. Horner, "Transport, Deposition and Control of Heavy Metals in Highway Runoff." FHWA-WA-RD-39.10. Report to Washington State Department of Transportation by Department of Civil Engineering, University of Washington, Seattle, 1982

Water Environment Federation, “Urban Runoff Quality Management”, American Society of Civil Engineers, 1998.

Water Pollution Control Federation, “Clarifier Design,” Manual of Practice FD-8, 1985.

Watershed Protection Techniques, “Hydrocarbon Hotspots in the Urban Landscape: Can They be Controlled?”, Feb. 1994.

WEF & ASCE, “Urban Runoff Quality Management, 1998.

Wiltsie, Edward, Stormwater Facilities Performance Study, Infiltration Pond Testing and Data Evaluation, August 10, 1998.

Woinsky, S. G., “New Advanced Solids/Oil/Water Separator,” Environmental Progress, Feb. 1995.

Wong, S.L., and R.H. McKuen, "The Design of Vegetative Buffer Strips for Runoff and Sediment Control", Report to the Maryland Coastal Zone Management Program, University of Maryland, College Park, Maryland, 1981.

Woodward-Clyde Consultants (Recommendations by), "Biofiltration Swales and Filter Strips", November 1995.

Woodward-Clyde Consultants “Oil/Water Separators.”

Woodward-Clyde Consultants, Recommendations for Revising Ecology’s Manual, November 1995.

Appendix V-A Basic Treatment Receiving Waters

1. All salt waterbodies

2.

Rivers	Upstream Point for Exemption
Baker	Anderson Creek
Bogachiel	Bear Creek
Cascade	Marblemount
Chehalis	Bunker Creek
Clearwater	Town of Clearwater
Columbia	Canadian Border
Cowlitz	Skate Creek
Elwha	Lake Mills
Green	Howard Hanson Dam
Hoh	South Fork Hoh River
Humptulips	West and East Fork Confluence
Kalama	Italian Creek
Lewis	Swift Reservoir
Muddy	Clear Creek
Nisqually	Alder Lake
Nooksack	Glacier Creek
South Fork Nooksack	Hutchinson Creek
North River	Raymond
Puyallup	Carbon River
Queets	Clearwater River
Quillayute	Bogachiel River
Quinault	Lake Quinault
Sauk	Clear Creek
Satsop	Middle and East Fork Confluence
Skagit	Cascade River
Skokomish	Vance Creek
Skykomish	Beckler River
Snohomish	Snoqualmie River
Snoqualmie	Middle and North Fork Confluence
Sol Duc	Beaver Creek
Stillaguamish	North and South Fork Confluence
North Fork Stillaguamish	Boulder River
South Fork Stillaguamish	Canyon Creek
Suiattle	Darrington
Tilton	Bear Canyon Creek
Toutle	North and South Fork Confluence
North Fork Toutle	Green River
Washougal	Washougal
White	Geenwater River
Wind	Carson
Wynoochee	Wishkah River Road Bridge

3.	Lakes	County
	Washington	King
	Sammamish	King
	Union	King
	Whatcom	Whatcom
	Silver	Cowlitz

Note: Local governments may petition for the addition of more waters to this list. The initial criteria for this list are rivers whose mean annual flow exceeds 1000 cfs, and lakes whose surface area exceeds 300 acres. Additional waters do not have to meet these criteria, but should have sufficient background dilution capacity to accommodate dissolved metals additions from build-out conditions in the watershed under the latest Comprehensive Land Use Plan and zoning regulations.

Appendix V-B Recommended Modifications to ASTM D 2434 When Measuring Hydraulic Conductivity for Bioretention Soil Mixes

Developed by the City of Seattle in cooperation with local soils laboratories.

Proctor method ASTM D1557 Method C (6-inch mold) shall be used to determine maximum dry density values for compaction of bioretention soil sample. Sample preparation for the Proctor test shall be amended in the following ways:

1) Maximum grain size within the sample shall be no more than ½ inches in size.
2) Snip larger organic particles (if present) into ½ inch long pieces.
3) When adding water to the sample during the Proctor test, allow the sample to pre-soak for at least 48 hours to allow the organics to fully saturate before compacting the sample. This pre-soak ensures the organics have been fully saturated at the time of the test.

ASTM D2434 shall be used and amended in the following ways:

1) Apparatus:
   a. 6-inch mold size shall be used for the test.
   b. If using porous stone disks for the testing, the permeability of the stone disk shall be measured before and after the soil tests to ensure clogging or decreased permeability has not occurred during testing.
   c. Use the confined testing method, with 5- to 10-pound force spring
   d. Use de-aired water.
2) Sample:
   a. Maximum grain size within the sample shall not be more than ½ inch in size.
   b. Snip larger organic particles (if present) into ½-inch long pieces.
   c. Pre-soak the sample for at least 48 hours prior to loading it into the mold. During the pre-soak, the moisture content shall be higher than optimum moisture but less than full saturation (i.e., there shall be no free water). This pre-soak ensures the organics have been fully saturated at the time of the test.
3) Preparation of Sample:
   a. Place soil in cylinder via a scoop.
   b. Place soil in 1-inch lifts and compact using a 2-inch-diameter round tamper. Pre-weigh how much soil is necessary to fill 1-inch lift at 85% of maximum dry density, then tamp to 1-inch thickness. Once mold is full, verify that density is at 85% of maximum dry density (+ or – 0.5%). Apply vacuum (20 inches Hg) for 15 minutes before inundation.
   c. Inundate sample slowly under a vacuum of 20 inches Hg over a period of 60 to 75 minutes.

d. Slowly remove vacuum (> 15 seconds).

e. Sample shall be soaked in the mold for 24 to 72 hours before starting test.

4) Procedure:

a. The permeability test shall be conducted over a range of hydraulic gradients between 0.1 and 2.

b. Steady state flow rates shall be documented for four consecutive measurements before increasing the head.

c. The permeability test shall be completed within one day (one-day test duration).

Appendix V-C Geotextile Specifications

Table C.1 Geotextile Properties for Underground Drainage Geotextile Property Requirements[1]			
		Low Survivability	**Moderate Survivability**
Geotextile Property	**Test Method**	**Woven/Nonwoven**	**Woven/Nonwoven**
Grab Tensile Strength,in machine and x-machine direction	ASTM D4632	180 lbs/115 lbs min.	250 lbs/160 lbs min.
Grab Failure Strain, in machine and x-machine direction	ASTM D4632	<50%/>=50%	<50%/>=50%
Seam Breaking Strength (if seams are present) with seam located in the center of 8-inch-long specimen oriented parallel to grip faces	ASTM D4632	160 lbs/100 lbs min.	220 lbs/140 lbs min.
Puncture Resistance	ASTM D6241	370 lbs/220 lbs min.	495 lbs/310 lbs min.
Tear Strength, in machine and x-machine direction	ASTM D4533	67 lbs/40 lbs min.	80 lbs/50 lbs min.
Ultraviolet (UV) Radiation stability	ASTM D4355	50% strength retained min., after 500 hrs. in a xenon arc device	50% strength retained min., after 500 hrs. in a xenon arc device

[1] All geotextile properties are minimum average roll values (i.e., the test result for any sampled roll in a lot shall meet or exceed the values shown in the table).

Table C.-2
Geotextile for Underground Drainage Filtration Properties

Geotextile Property Requirements[1]

Geotextile Property	Test Method	Class A	Class B	Class C
AOS[2]	ASTM D4751	No. 40 max.	No. 60 max.	No. 80 max.
Water Permittivity	ASTM D4491	0.5 sec^{-1} min.	0.4 sec^{-1} min.	0.3 sec^{-1} min.

[1] All geotextile properties are minimum average roll values (i.e., the test result for any sampled roll in a lot shall meet or exceed the values shown in the table).
[2] Apparent Opening Size (measure of diameter of the pores in the geotextile)

Table C.-3
Geotextile Strength Properties for Impermeable Liner Protection

Geotextile Property	**Test Method**	**Geotextile Property Requirements[1]**
Grab Tensile Strength, min. in machine and x-machine direction	ASTM D4632	250 lbs min.
Grab Failure Strain, in machine and x-machine direction	ASTM D4632	>50%
Seam Breaking Strength (if seams are present)	ASTM D4632 and ASTM D4884 (adapted for grab test)	220 lbs min.
Puncture Resistance	ASTM D4833	125 lbs min.
Tear Strength, min. in machine and x-machine direction	ASTM D4533	90 lbs min.
Ultraviolet (UV) Radiation	ASTM D4355	50% strength stability retained min., after 500 hrs. in ~~weatherometer~~xenon arc device

[1] All geotextile properties are minimum average roll values (i.e., the test result for any sampled roll in a lot shall meet or exceed the values shown in the table).

Applications

1. For sand filter drain strip between the sand and the drain rock or gravel layers specify Geotextile Properties for Underground Drainage, moderate survivability, Class A, from C-1 and C-2 in the Geotextile Specifications.
2. For sand filter matting located immediately above the impermeable liner and below the drains, the function of the geotextile is to protect the impermeable liner by acting as a cushion. The specification provided in Table C-3 should be used to specify survivability properties for the liner protection application. Table 2, Class C should be used for filtration properties. Only nonwoven geotextiles are appropriate for the liner protection application.
3. For an infiltration drain specify Geotextile for Underground Drainage, low survivability, Class C, from Tables C-1 and C-2 in the Geotextile Specifications.
4. For a sand bed cover a geotextile fabric is placed exposed on top of the sand layer to trap debris brought in by the storm water and to protect the sand, facilitating easy cleaning of the surface of the sand layer. However, a geotextile is not the best product for this application. A polyethylene or polypropylene geonet would be better. The geonet material should have high UV resistance (90% or more strength retained after 500 hours in the weatherometer, ASTM D4355), and high permittivity (ASTM D4491, 0.8 sec. -1 or more) and percent open area (CWO-22125, 10% or more). Tensile strength should be on the order of 200 lbs grab (ASTM D4632) or more.

Courtesy of Tony Allen, Geotechnical Engineer-WSDOT

Reference for Tables C-1 and C-2: Section 9-33.2 “Geotextile Properties,” 2012 Standard Specifications for Road, Bridge, and Municipal Construction.

This page purposely left blank

Appendix V-D Turbulence and Short-Circuiting Factor

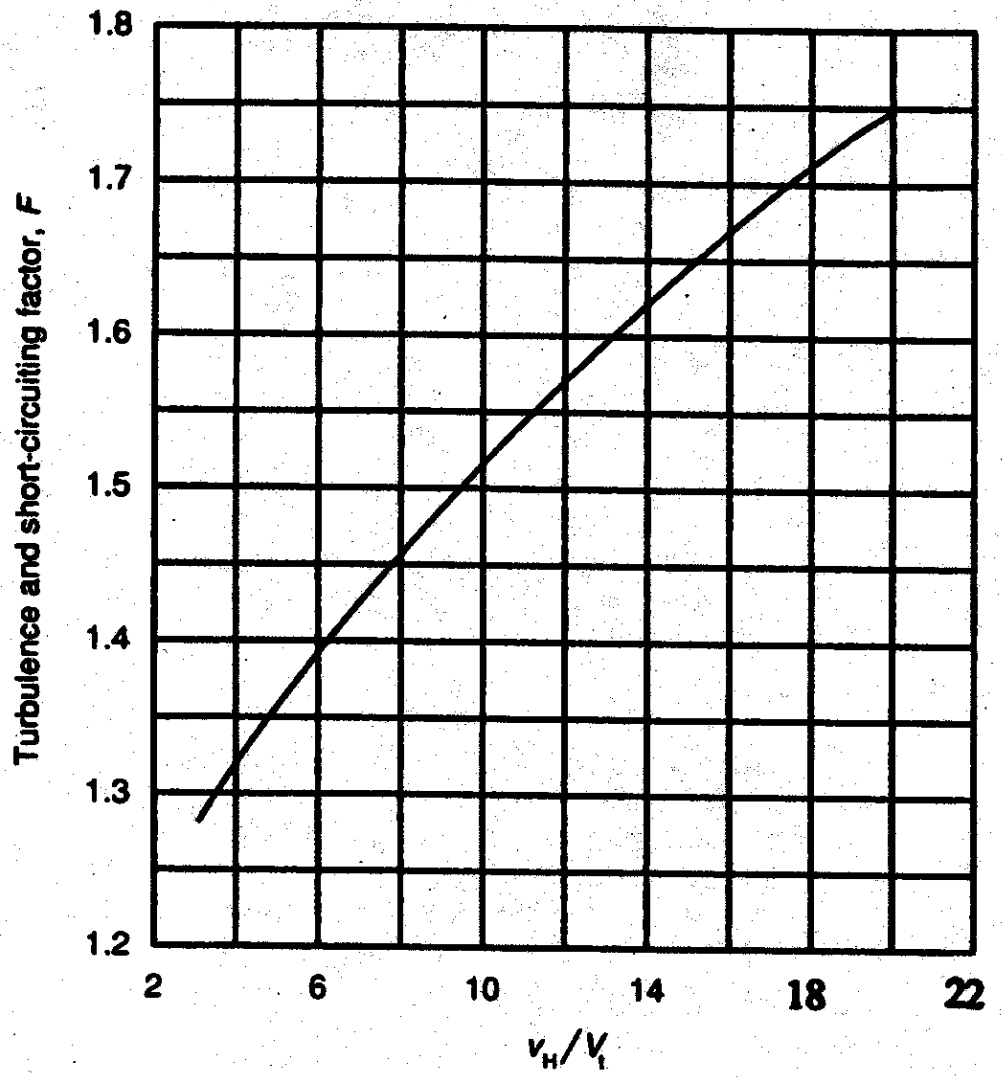

v_H/V_t	Turbulence Factor (F_t)	$F = 1.2(F_t)$
20	1.45	1.74
15	1.37	1.64
10	1.27	1.52
6	1.14	1.37
3	1.07	1.28

Figure D.1 – Recommended Values of *F* for Various Values of v_H/Vt

This page purposely left blank

Appendix V-E Recommended Newly Planted Tree Species for Flow Control Credit

Reprinted with permission of the City of Seattle

Green Factor Trees (Sorted according to criteria)

Group	Botanical Name	Common Name	Height	Spread	Shape	Volume	Strip Width	Wires	Fall Color	Comments	Street Tree	Native Tree
Large												
	Abies grandis	Grand Fir	100	35		0		☐		Grows at 0-1500 m in moist conifer forests	☐	☑
	Abies procera	Noble Fir	90	30		0		☐			☐	☐
	Acer freemanii 'Autumn Blaze'	Autumn Blaze M	50	40		37700	6	☐	Orange		☑	☐
	Acer macrophyllum	Big Leaf Maple	100	80	Rounded	0		☐	yellow / brown	Very large native	☐	☑
	Acer platanoides 'Emerald Que	Emerald Queen	50	40		50300	6	☐	Yellow		☑	☐
	Acer saccharum 'Bonfire'	Bonfire Sugar Ma	50	40	Oval	50300	6	☐	Bright orange red	Fastest growing sugar maple.	☑	☐
	Acer saccharum 'Commemorat	Commemoration	50	35		38500	6	☐	Orange to orange-red	Resistant to leaf tatter.	☑	☐
	Acer saccharum 'Legacy'	Legacy Sugar Ma	50	35		38500	5	☐	Yellow or orange/red	Limited use - where sugar maple is desired in standard planting strips	☑	☐
	Aesculus flava	Yellow Buckeye	70	40		0		☐	yellow / orange	yellow flowers - least suscepible to leaf blotch - large fruit	☐	☐
	Alnus rubra	Red Alder	70	35	Broadly coni	0		☐	yellow / brown	nitrogen fixing	☐	☑
	Cercidiphyllum japonicum	Katsura Tree	40	40	Oval	37700	6	☐	Yellow to orange	Needs lots of water when young	☑	☐
	Fagus sylvatica	Green Beech	50	40	Oval	50300	6	☐	Bronze	Silvery-grey bark.	☑	☐
	Fagus sylvatica 'Asplenifolia'	Fernleaf Beech	60	60		0	6	☐	golden / brown	Beautiful cut leaf	☑	☐
	Fraxinus latifolia	Oregon Ash	60	35		0		☐	yellow / brown	Only native ash in PNW	☐	☑

Group	Botanical Name	Common Name	Height	Spread	Shape	Volume	Strip Width	Wires	Fall Color	Comments	Street Tree	Native Tree
	Fraxinus pennsylvanica 'Urbani	Urbanite Ash	50	40	Pyramidal	50300	6	☐	Deep bronze	Tolerant of city conditions	☑	☐
	Gymnocladus dioicus 'Espress	Espresso Kentuc	50	35		0	6	☐	yellow	very coarse branches - extremely large bi-pinnately compound leaf -	☑	☐
	Liriodendron tulipifera	Tulip Tree	60	30	Oval	35400	8	☐	Yellow	Fast-growing tree.	☑	☐
	Nothofagus antarctica	Antarctic Beech	50	35		38500	6	☐	None	Rugged twisted branching and petite foliage.	☑	☐
	Picea sitchensis	Sitka Spruce	100	30		0		☐	Evergreen	Native environment is characterized by a cool, moist maritime climate	☐	☑
	Pinus monticola	Western White Pi	100	35		0		☐	Evergreen	Occurs in lowland fog forests or on moist mountain soils - primary host	☐	☑
	Platanus x acerifolia 'Bloodgoo	Bloodgood Londo	50	40	Pyramidal	63700	8	☐	Red	More anthracnose resistant - needs space	☑	☐
	Platanus x acerifolia 'Yarwood'	Yarwood London	50	40		50300	8	☐	Yellow-brown	High resistance to powdery mildew.	☑	☐
	Psudotsuga menziesii	Douglas Fir	150	35		0		☐	Evergreen		☐	☑
	Quercus bicolor	Swamp White Oa	45	45		55700	8	☐	Varies.	Shaggy peeling bark	☑	☐
	Quercus coccinea	Scarlet Oak	50	40	Upright	50300	6	☐	Red	Best oak for fall color	☑	☐
	Quercus garryana	Oregon Oak	45	40	Oval	43960	6	☐		Native to Pacific Northwest	☑	☐
	Quercus imbricaria	Shingle Oak	60	50		0	6	☐	golden / brown	nice summer foliage - leaves can persist	☑	☐
	Quercus muhlenbergii	Chestnut Oak	60	50		0	6	☐	brown / yellow	coarsely toothed leaf	☑	☐
	Quercus robur	English Oak	50	40	Rounded	50300	8	☐	Yellow-brown	Large, sturdy tree	☑	☐
	Quercus rubra	Red Oak	50	45	Rounded	63600	8	☐	Red	Fast growing oak - needs space	☑	☐

Group	Botanical Name	Common Name	Height	Spread	Shape	Volume	Strip Width	Wires	Fall Color	Comments	Street Tree	Native Tree
	Quercus velutina	Black Oak	60	50		0	6	☐	rusty red		☑	☐
	Thuja plicata	Western Red Ce	125	40	Pyramidal	0		☐	Evergreen	growth is stunted on dry soils	☐	☑
	Tsuga heterophylla	Western Hemloc	130	30		0		☐	Evergreen		☐	☑
	Ulmus 'Homestead'	Homestead Elm	60	35		48100	6	☐	Yellow		☑	☐
	Ulmus 'Pioneer'	Pioneer Elm	60	50		98200	6	☐	Yellow	Resistant to Dutch elm disease.	☑	☐
	Ulmus parvifolia 'Emer II'	Allee Elm	50	35	Vase	38500	5	☐	Yellow-orange	Exfoliating bark and nice fall color	☑	☐
	Zelkova serrata 'Greenvase'	Green Vase Zelk	50	40		50300	5	☐	Orange	Vigorous	☑	☐
Medium / Large												
	Acer campestre	Hedge Maple	30	30		14100	5	☐	Yellow		☑	☐
	Acer campestre 'Evelyn'	Queen Elizabeth	35	30		17700	5	☐	Yellow	More upright branching than the species.	☑	☐
	Acer miyabei 'Morton'	State Street Mapl	45	30		0	5	☐	yellow		☑	☐
	Acer platanoides 'Parkway'	Parkway Norway	40	25		14700	6	☐	Yellow	tolerant of verticillium wilt	☑	☐
	Acer pseudoplatanus 'Atropurp	Spaethii Maple	40	30		21200	5	☐	Not significant	Leaves green on top purple underneath.	☑	☐
	Acer saccharum 'Green Mount	Green Mountain	45	35	Oval	33700	6	☐	Red to orange.	Reliable fall color	☑	☐
	Aesculus x carnea	'Briottii' Red Hors	30	35		19200	5	☐	No	Resists heat and drought better than other horsechestmuts.	☑	☐
	Betula albosinenesis var septe	Chinese Red Birc	45	35		0	5	☐	yellow	pink/ white peeling bark	☑	☐
	Betula jacquemontii	Jacquemontii Bir	40	30	Oval	21200	5	☐	Yellow	White bark makes for good winter interest - best for aphid resistance	☑	☐

Group	Botanical Name	Common Name	Height	Spread	Shape	Volume	Strip Width	Wires	Fall Color	Comments	Street Tree	Native Tree
	Betula papyrifera	Paper Birch	60	35		0		☐	Yellow / brown	High susceptibility to aphid infestation	☐	☑
	Chamaecyparis pisifera	Sawara Cypress	45	25	Pyramidal	17200	6	☐	Evergreen	Special site approval needed - many cultivars available	☐	☐
	Corylus colurna	Turkish Filbert	40	25	Pyramidal	14800	5	☐	Yellow	Tight, formal, dense crown - not for high pedestrian areas	☑	☐
	Eucommia ulmoides	Hardy Rubber Tr	50	40		0	5	☐		Dark green shiny leaves	☑	☐
	Fagus sylvatica 'Rohanii'	Purple Oak Leaf	50	30		0	6	☐		Attractive purple leaves with wavy margins.	☑	☐
	Fraxinus americana 'Autumn A	Autumn Applaus	40	25	Oval	14700	5	☐	Purple	Compact tree - reportedly seedless	☑	☐
	Fraxinus americana 'Empire'	Empire Ash	50	25	Columnar	17900	5	☐	Rusty Orange	Use for areas adjacent to taller buildings when ash is desired	☑	☐
	Fraxinus pennsylvanica 'Patmo	Patmore Ash	45	35	Oval	33700	5	☐	Yellow	Extremely hardy, may be seedless.	☑	☐
	Ginko biloba 'Autumn Gold'	Autumn Gold Gin	45	35	Pyramidal	33700	6	☐	Yellow	Narrow when young	☑	☐
	Halesia monticola	Mountain Silverb	45	25		0	5	☐	yellow	attractive, small white flower	☑	☐
	Koelreuteria paniculata	Goldenrain Tree	30	30		14100		☑	Yellow	Midsummer blooming.	☑	☐
	Liquidambar styraciflua 'Rotun	Rotundiloba Swe	45	25		17200	6	☐	Purple orange	Only sweetgum that is entirely fruitless. Smooth rounded leaf	☑	☐
	Magnolia denudata	Yulan Magnolia	40	40		0	5	☐		6" inch, fragrant, white blossoms in spring	☑	☐
	Metasequoia glyptostroboides	Dawn Redwood	50	25	Narrow	19625	6	☐	Rusty	Fast growing deciduous conifer	☑	☐
	Nyssa sylvatica	Tupelo	60	20		18800	5	☐	Apricot > bright red	Handsomely chunky bark.	☑	☐
	Phellodendron amurense 'Mac	Macho Cork Tree	40	40		0	5	☐	yellow	Male selection - fruitless - another good variety is 'His Majesty'	☑	☐

Group	Botanical Name	Common Name	Height	Spread	Shape	Volume	Strip Width	Wires	Fall Color	Comments	Street Tree	Native Tree
	Pinus nigra	Austrian Pine	45	25	Pyramidal	17200	6	☐	Evergreen	Special site approval needed - fairly tolerant of heat, pollution, urban	☐	☐
	Pinus pinea	Italian Stone Pin	40	30	Pyramidal	21200	6	☐	Evergreen	Special site approval needed	☐	☐
	Populus tremuloides	Quaking Aspen	50	30		0		☐	yellow / orange		☐	☑
	Pyrus calleryana 'Aristocrat'	Aristocrat Pear	40	30		21200	5	☐	Red	Good branch angles - one of the tallest pears	☑	☐
	Quercus frainetto	Italian Oak	50	30	Oval	28300	6	☐	Yellow-Brown	Drought resistant	☑	☐
	Quercus robur 'fastigiata'	Skyrocket Oak	40	15		17200	6	☐	Yellow-brown	Columnar variety of oak.	☑	☐
	Salix lasiandra	Pacific Willow	40	30		0		☐	yellow		☐	☑
	Sophora japonica 'Regent'	Japanese Pagod	50	40		0	6	☐	yellow	can have trunk canker or twig blight	☑	☐
	Taxodium distichum	Bald Cypress	55	30	Pyramidal	31800	6	☐	Rusty red	A deciduous conifer	☑	☐
	Taxodium distichum 'Mickelson	Shawnee Brave	55	20	Narrow/pyr.	14100	6	☐	Orange/bronze	Deciduous conifer - tolerates city conditions	☑	☐
	Tilia americana 'Redmond'	Redmond Linden	45	30	Pyramidal	21200	8	☐	Yellow	Pyramidal, needs water.	☑	☐
	Tilia cordata 'Greenspire'	Greenspire Linde	40	30		21200	5	☐	Yellowish	Symmetrical, pyramidal form.	☑	☐
	Zelkova serrata 'Village Green'	Village Green Zel	40	38		34000	5	☐	Rusty Red		☑	☐
Medium / Small												
	Acer nigrum 'Green Column'	Green Column Bl	50	10		12600	5	☐	Yellow to orange	Good close to buildings.	☑	☐
	Acer platanoides'Columnar'	Columnar Norwa	40	15		5300	5	☐	Yellow	Good close to buildings.	☑	☐
	Acer rubrum 'Bowhall'	Bowhall Maple	40	15		5300	5	☐	Yellow orange		☑	☐

Group	Botanical Name	Common Name	Height	Spread	Shape	Volume	Strip Width	Wires	Fall Color	Comments	Street Tree	Native Tree
	Acer rubrum 'Karpick'	Karpick Maple	35-40	20		8800	5	☐	Yellow to orange	May work under very high powerlines with arborist's approval.	☑	☐
	Acer rubrum 'Scarsen'	Scarlet Sentinel	40	20		9400	5	☐	Yellow orange		☑	☐
	Acer truncatum x A. platanoide	Norwegian Suns	35	25		12300		☑	Yellow-orange/red	Limited use under wires	☑	☐
	Acer truncatum x A. platanoide	Pacific Sunset M	30	25		9800	5	☑	Yellow-orange/red	Limited use under wires	☑	☐
	Alnus sinuata	Sitka Alder	40	25		0		☐		Prefers a heavy moist soil - usually found above 3000' feet - can be	☐	☑
	Carpinus betulus	'Fastigiata' Pyra	35	15	Pyramidal	12300	5	☐	Yellow	Broadens when older	☑	☐
	Cladrastis kentukea	Yellowwood	40	40		0	5	☐	yellow / orange	white flowers in spring, resembling wisteria flowers	☑	☐
	Cornus controversa 'June Sno	Giant Dogwood	40	30		0	5	☐	red / orange	Large white flower clusters that appear in June	☑	☐
	Crataegus crus-galli 'Inermis'	Thornless Cocks	25	30		10600		☑	Orange to scarlet	Red persistent fruit.	☑	☐
	Crataegus phaenopyrum	Washington Haw	25	20		4700		☑	Scarlet	Thorny.	☑	☐
	Crataegus suksdorfii	Suksdorf's Hawth	30	25		0		☐		Shorter spines than C. Douglasii	☐	☑
	Crataegus x lavalii	Lavalle Hawthorn	28	20		5600		☑	Bronze	Thorns on younger trees.	☑	☐
	Davidia involucrata	Dove Tree	40	30		0	5	☐		large, unique white flowers in May	☑	☐
	Ginko biloba 'Princeton Sentry	Princeton Sentry	40	15	Columnar	5300	6	☐	Yellow	Very narrow growth.	☑	☐
	Halesia tetraptera	Carolina Silverbel	35	30	Irregular	0	5	☐	Yellow	Attractive bark for seasonal interest	☑	☐
	Libocedrus decurrens	Incense Cedar	35	20	Pyramidal	7850	6	☐	Evergreen	Special site approval needed	☐	☐

Group	Botanical Name	Common Name	Height	Spread	Shape	Volume	Strip Width	Wires	Fall Color	Comments	Street Tree	Native Tree
	Liquidambar styraciflua	Moraine Sweetgu	40	20		9400	6	☐	Yellow, orange/red	Light green foliage. More compact than other varieties	☑	☐
	Maackia amurensis	Amur Maackia	30	20		0	5	☑	none	attractive bark and summer flowers - grows in tough conditions	☑	☐
	Magnolia 'Elizabeth'	Elizabeth Magnol	30	20		0	5	☑		yellow flowers	☑	☐
	Magnolia 'Galaxy'	Galaxy Magnolia	35	25	pyramidal	0	5	☑	yellow/brown	reddish-purple flowers in spring.	☑	☐
	Magnolia grandiflora 'Victoria'	Victoria Evergree	25	20		4700	5	☑	Evergreen		☑	☐
	Magnolia Kobus	Wada's Memory	35	20	Round	7900	5	☑	Brown	Does not flower well when young	☑	☐
	Ostrya virginiana	Ironwood	40	25		0	5	☐	yellow	hop like fruit	☑	☐
	Parrotia persica	Persian Parrotia	30	20		6300	5	☑	Yellow - orange red	Select or prune for single stem; can be multi-trunked.	☑	☐
	Pinus densiflora 'Umbraculifera	Umbrella Pine	25	20	Oval	4810	8	☑	Evergreen	Special site approval needed	☐	☐
	Prunus x yedoensis 'Akebono'	Akebono Floweri	25	25		7400	6	☑	Yellow		☑	☐
	Pterostyrax hispida	Fragrant Epaulett	40	30		0	5	☐	yellow / brown	Pendulous creamy white flowers - fragrant	☑	☐
	Pyrus calleryana 'Cambridge"	Cambridge Pear	40	15	Pyramidal	5300	5	☐	Reddish purple	Narrow tree with good branch angles and form	☑	☐
	Pyrus calleryana 'Glen's Form'	Chanticleer or Cl	40	15		5300	5	☐	Scarlet	Vigorous.	☑	☐
	Pyrus calleryana 'Redspire'	Redspire Pear	35	25		12300		☐	Yellow to red	Pyramidal.	☑	☐
	Quercus 'Crimschmidt'	Crimson Spire O	45	15		6200		☐		Hard to find.	☑	☐
	Robinia x ambigua	Pink Idaho Locus	35	25		12300	5	☐	Yellow	Fragrant flowers.	☑	☐

Group	Botanical Name	Common Name	Height	Spread	Shape	Volume	Strip Width	Wires	Fall Color	Comments	Street Tree	Native Tree
	Sciadopitys verticillata	Japanese Umbrel	30	20	Pyramidal	6300	8	☑	Evergreen	Grows slowly - pristine evergreen foliage - special site approval	☐	☐
	Sorbus alnifolia	Korean Mountain	40	30		0	5	☐	orange	Simple leaves. Beautiful pink-red fruit - may be short lived	☑	☐
	Sorbus aucuparia 'Mitchred'	Cardinal Royal M	35	20		7900	5	☑	Rust	Bright red berries.	☑	☐
	Sorbus x hybridia	Oakleaf Royal Mt	30	20		6300	5	☑	Rust		☑	☐
	Stewartia monodelpha	Orange Bark Ste	30	20		0	5	☑	orange	orange peeling bark - white flowers in spring	☑	☐
	Taxus brevifolia	Pacific Yew	40	25		0		☐	Evergreen	typically occurs as an understory tree 3-5 m tall west of the Cascades	☐	☑
	Tilia cordata 'De Groot'	De Groot Littlelea	30	20		6300	5	☑	Yellow	Compact, suckers less than other Lindens.	☑	☐
	Tilia cordata 'Chancole'	Chancelor Linden	35	20		7900	5	☐	Yellow	Pyramidal.	☑	☐