Standards

Water Pollution Control Act
(Chapter 90.48 RCW)

Discharges to state waters shall not cause pollution, which is defined as an alteration of the physical, chemical or biological properties of State waters which would impair beneficial uses. Requires the use of AKART and BMPs approved by Ecology.

Federal Clean Water Act

Restore and maintain the chemical, physical, and biological integrity of the Nation's waters.

- State water quality standards (water-quality based treatment requirements)
- Federal technology-based treatment requirements
- NPDES permits
- 303(d) impaired water body list and water clean-up plans

Others

Endangered Species Act
- Properly functioning conditions

Hydraulics Code (HPA)
Safe Drinking Water Act (UIC)

Presumptive Approach

The Stormwater Management Manual for Western Washington provides a default set of stormwater practices based on current science which satisfy State and Federal stormwater requirements.

Considerations:
- More predictable, practices are approved across jurisdictions
- Costly studies, etc. are not required as they may be under the demonstrative approach

Demonstrative Approach

Project sponsor and approval agency individually review and condition proposed projects to meet federal and state stormwater standards based on current science.

Considerations:
- Lacks predictability and can be very time consuming
- For large, complex projects may reduce costs and/or improve environmental protection

Science

Hydrology

- When native vegetation is removed and replaced with impervious surfaces (roads or buildings) there is an increase in stormwater runoff and other drastic alterations to the natural hydrology.
- Increased flows lead to increased flooding and stream bank and stream bed erosion.
- Unless mitigated, adverse high flow impacts occur at even low levels of urban development: 4% to 10% total impervious area.
- Transportation infrastructure (including parking areas) represents 50% and 75% of the impervious surface area within any single watershed.

Water Quality

- More than one-third of the State's urban streams, creeks, and embayments are impaired due to stormwater runoff.
- Stormwater runoff from construction activities can contain large amounts of sediments and suspended solids which are harmful to fish and other aquatic life.
- Untreated stormwater from roads and urban areas can adversely impact water quality due to sediments, toxic metals, pesticides, herbicides, oils and greases, and possible human pathogens including fecal coliform bacteria.
- Untreated stormwater runoff from roads and urban areas can be toxic to aquatic life including fish.

DEPARTMENT OF
ECOLOGY
State of Washington

Figure I-1.6.1
Relation Between Environmental Science and Standards in Stormwater Regulations

Revised June 2015

Please see *http://www.ecy.wa.gov/copyright.html* for copyright notice including permissions, limitation of liability, and disclaimer.

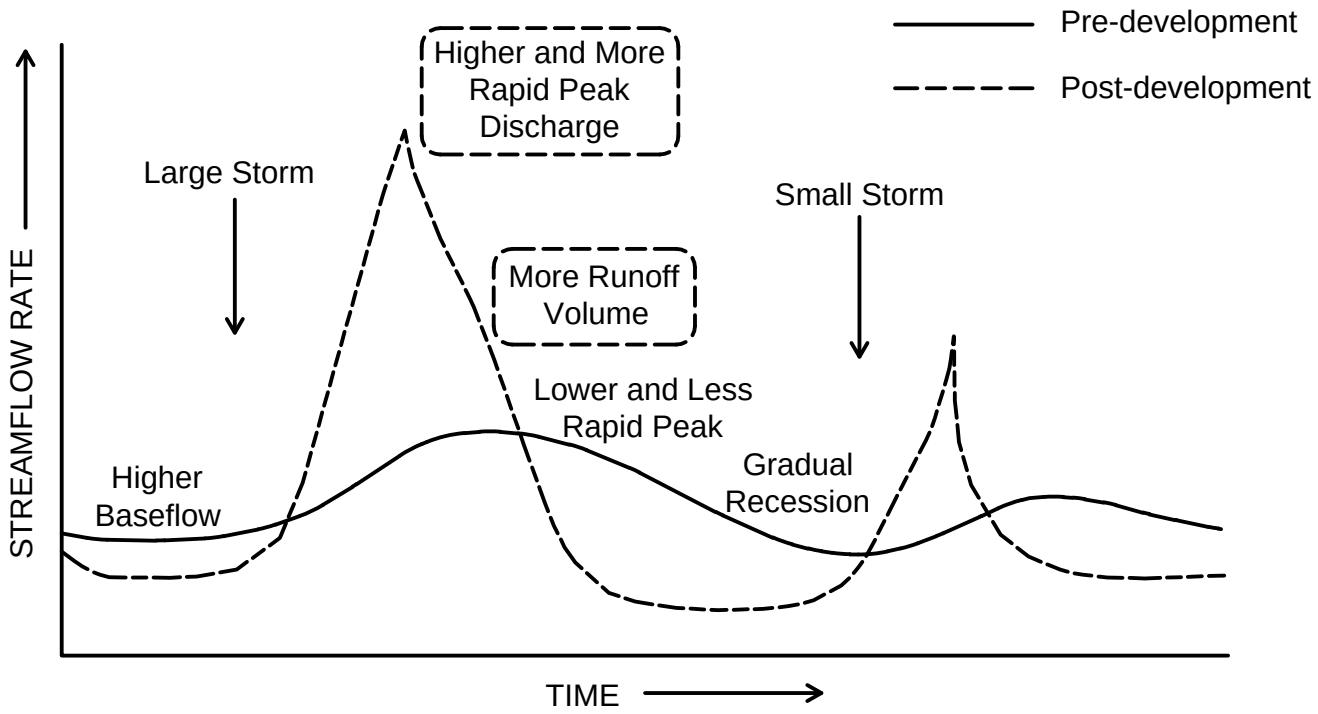

(Schueler, 1992)

NOT TO SCALE

DEPARTMENT OF ECOLOGY
State of Washington

Figure I-1.7.1
Changes in Hydrology after Development

Revised June 2015

Please see *http://www.ecy.wa.gov/copyright.html* for copyright notice including permissions, limitation of liability, and disclaimer.

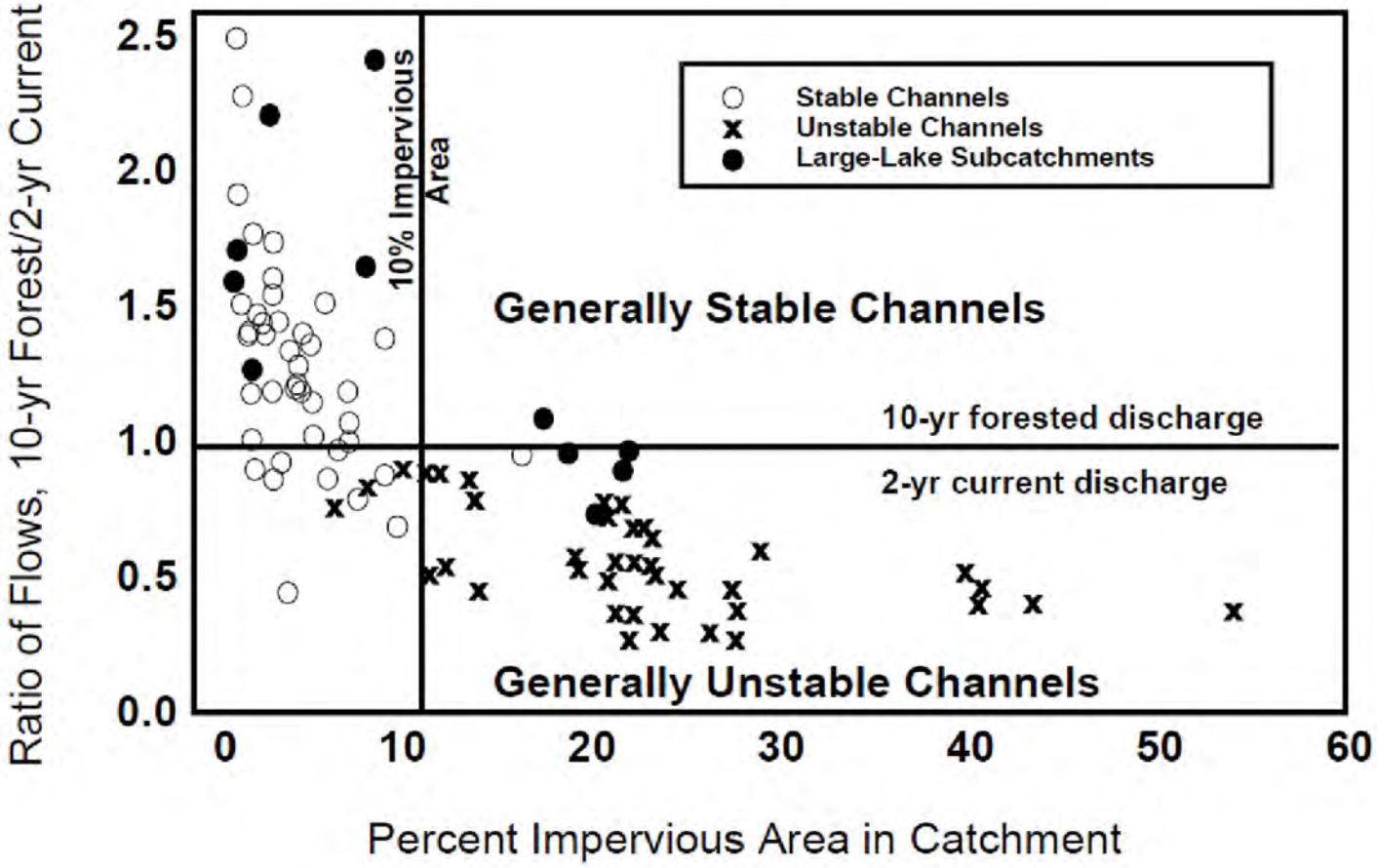

NOT TO SCALE

DEPARTMENT OF ECOLOGY
State of Washington

Figure I-1.7.2
Channel Stability and Land Use: Hylebos, East Lake Sammamish, Issaquah Basins

Revised June 2015

Please see *http://www.ecy.wa.gov/copyright.html* for copyright notice including permissions, limitation of liability, and disclaimer.

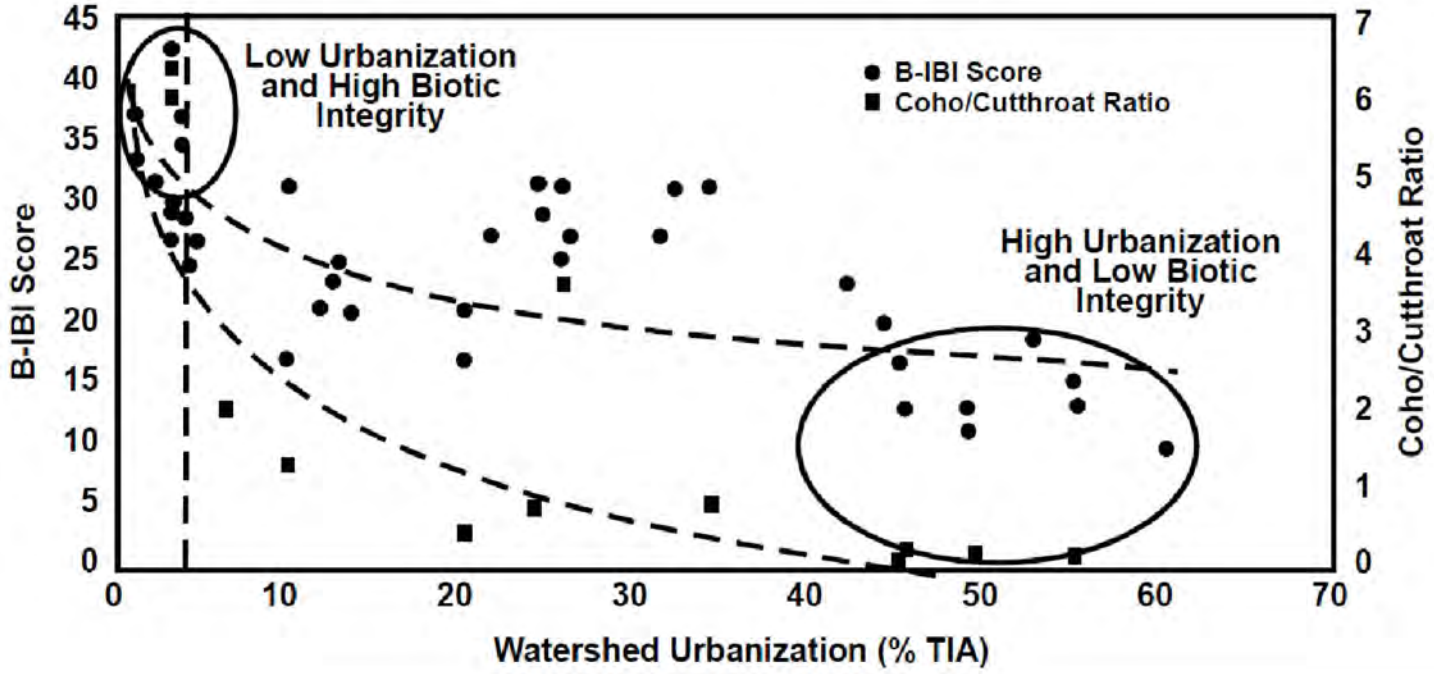

NOT TO SCALE

DEPARTMENT OF ECOLOGY
State of Washington

Figure I-1.7.3
Relationship Between Basin Development and Biotic Integrity in Puget Sound Lowland Streams

Revised June 2015

Please see *http://www.ecy.wa.gov/copyright.html* for copyright notice including permissions, limitation of liability, and disclaimer.

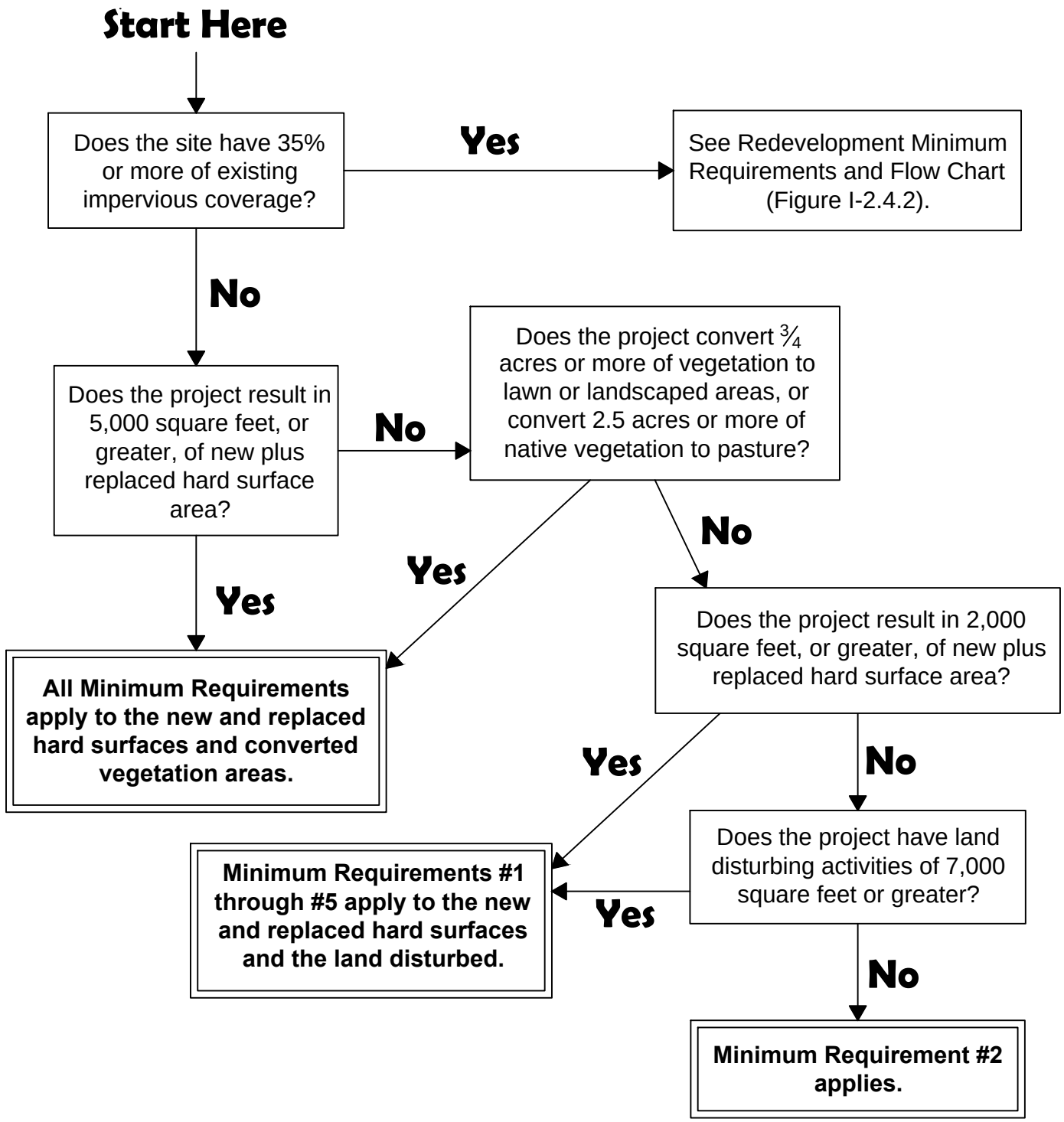

DEPARTMENT OF ECOLOGY
State of Washington

Figure I-2.4.1
Flow Chart for Determining Requirements for New Development

Revised June 2015

Please see *http://www.ecy.wa.gov/copyright.html* for copyright notice including permissions, limitation of liability, and disclaimer.

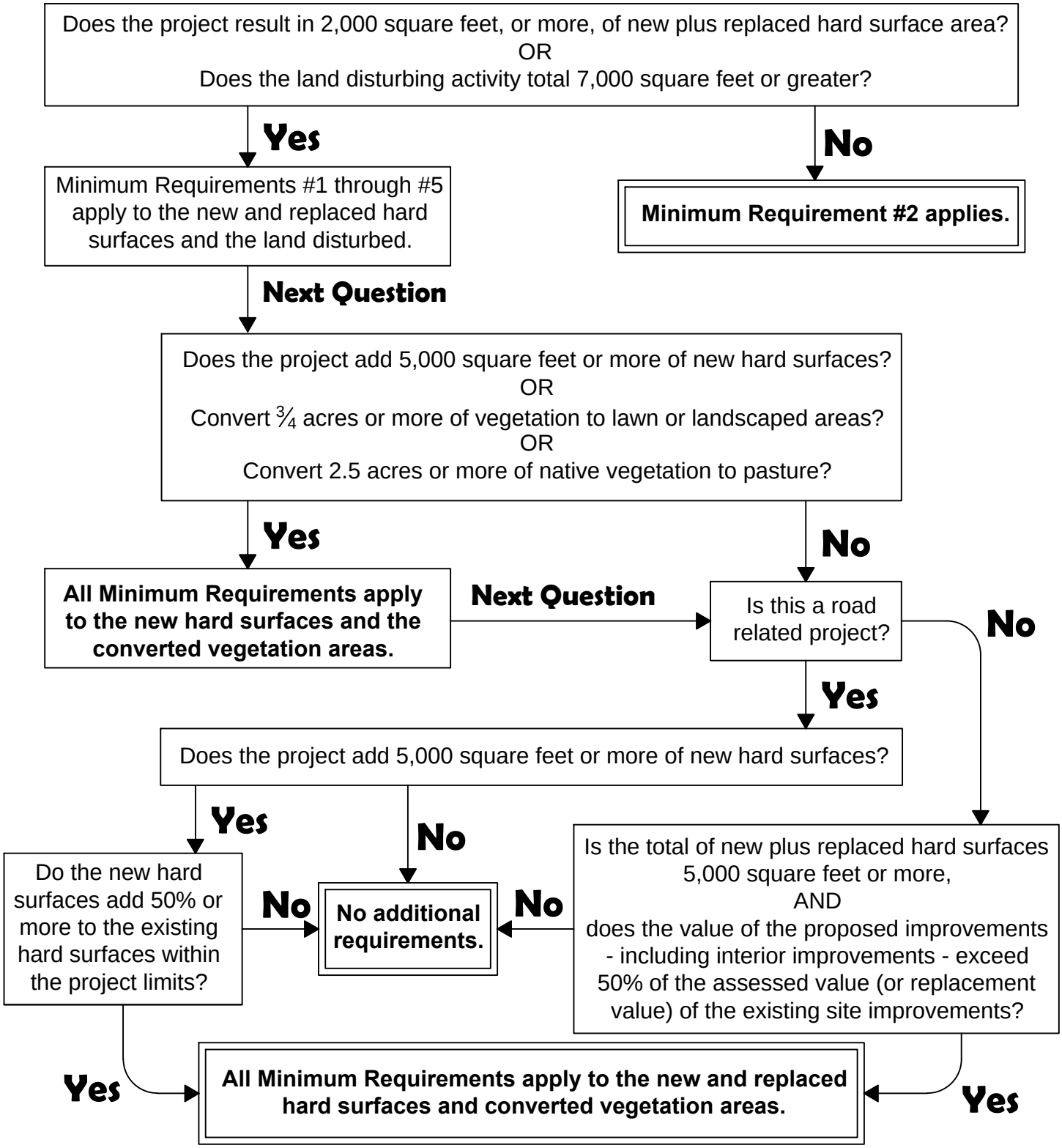

DEPARTMENT OF ECOLOGY
State of Washington

Figure I-2.4.2
Flow Chart for Determining Requirements for Redevelopment

Revised June 2015

Please see *http://www.ecy.wa.gov/copyright.html* for copyright notice including permissions, limitation of liability, and disclaimer.

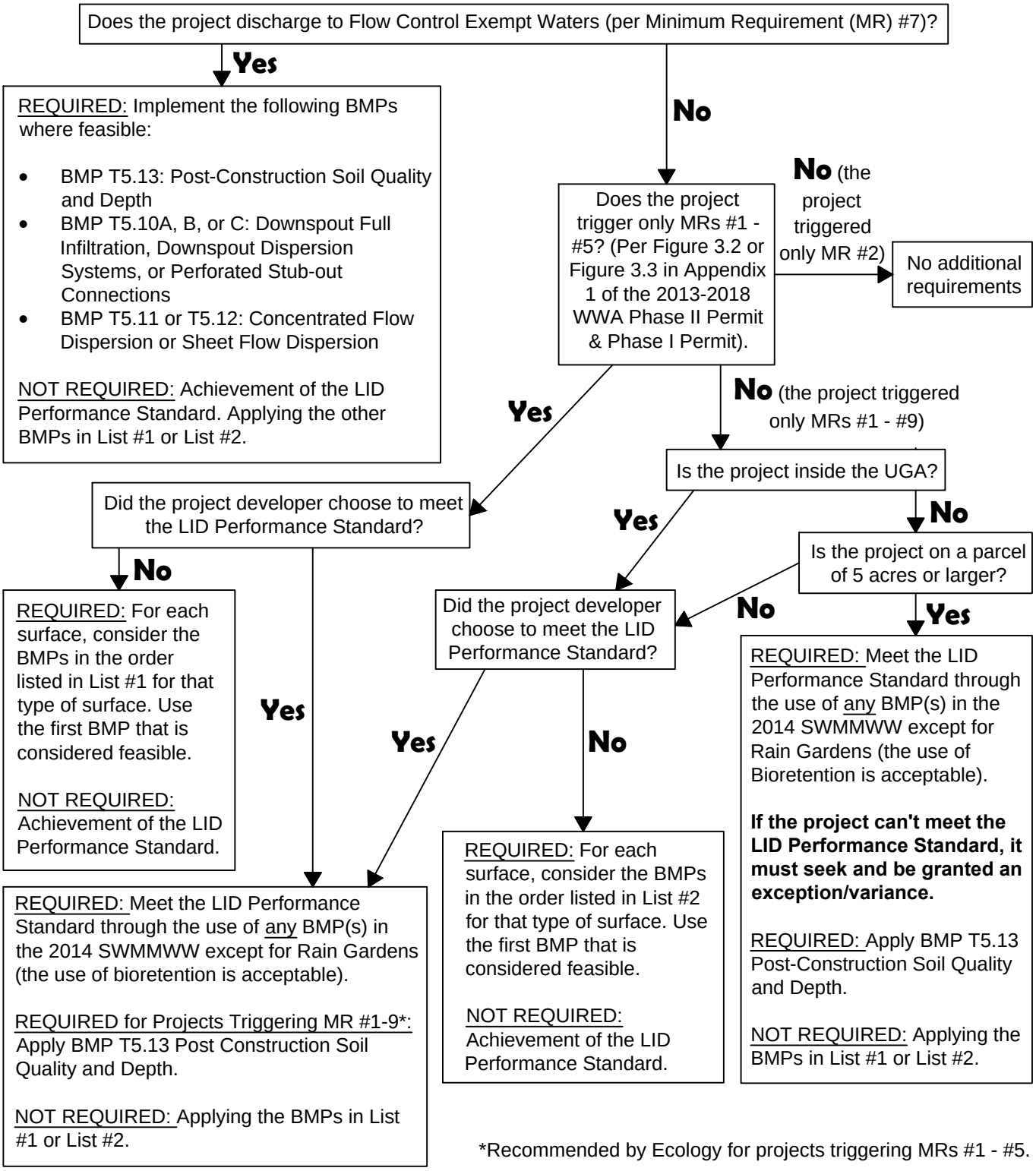

DEPARTMENT OF ECOLOGY
State of Washington

Figure I-2.5.1
Flow Chart for Determining LID MR #5 Requirements

Revised June 2015

Please see *http://www.ecy.wa.gov/copyright.html* for copyright notice including permissions, limitation of liability, and disclaimer.

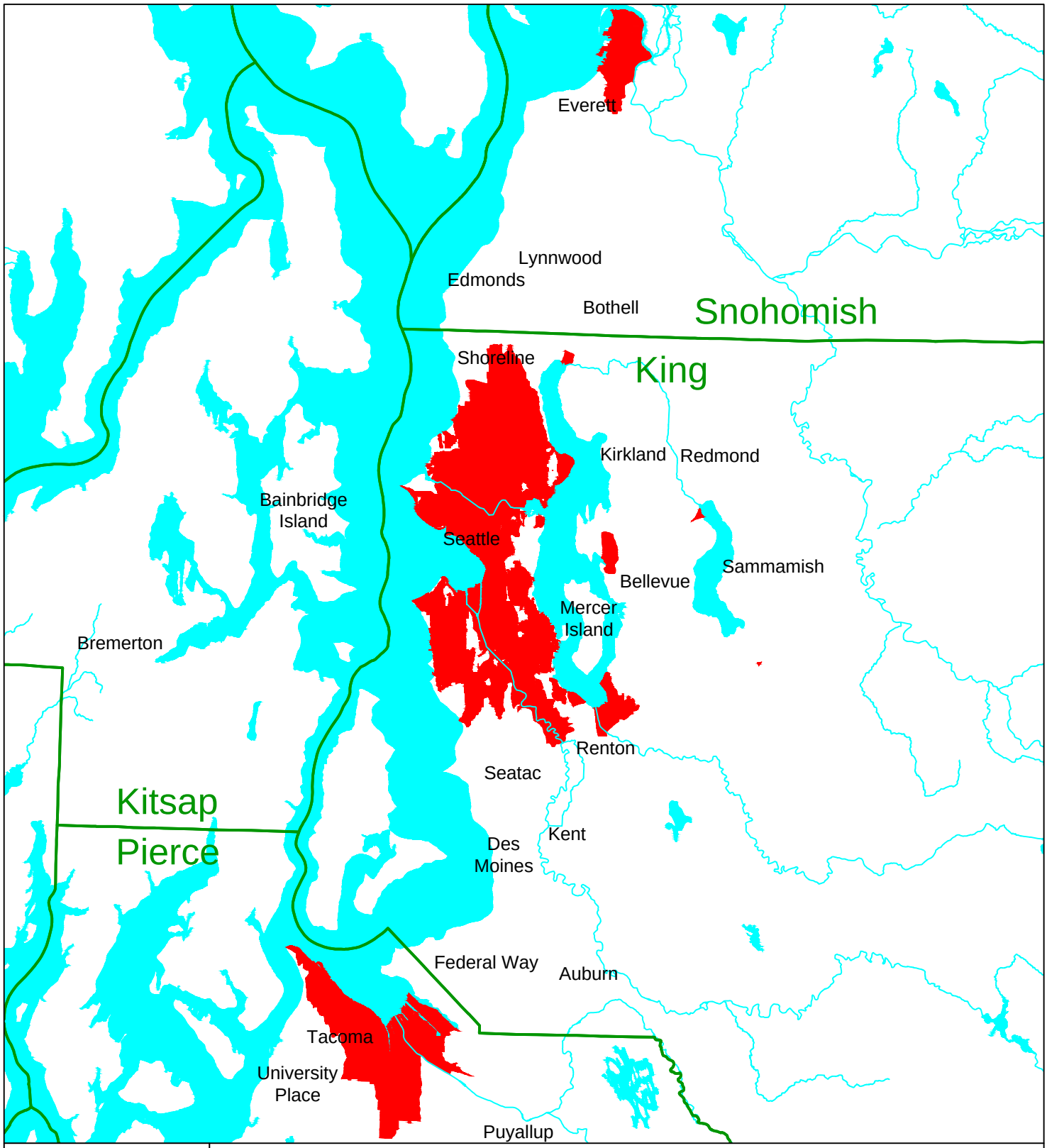

DEPARTMENT OF
ECOLOGY
State of Washington

Figure I-F.1
Basins with 40% Total Impervious Area as of 1985

Revised June 2015

Please see *http://www.ecy.wa.gov/copyright.html* for copyright notice including permissions, limitation of liability, and disclaimer.

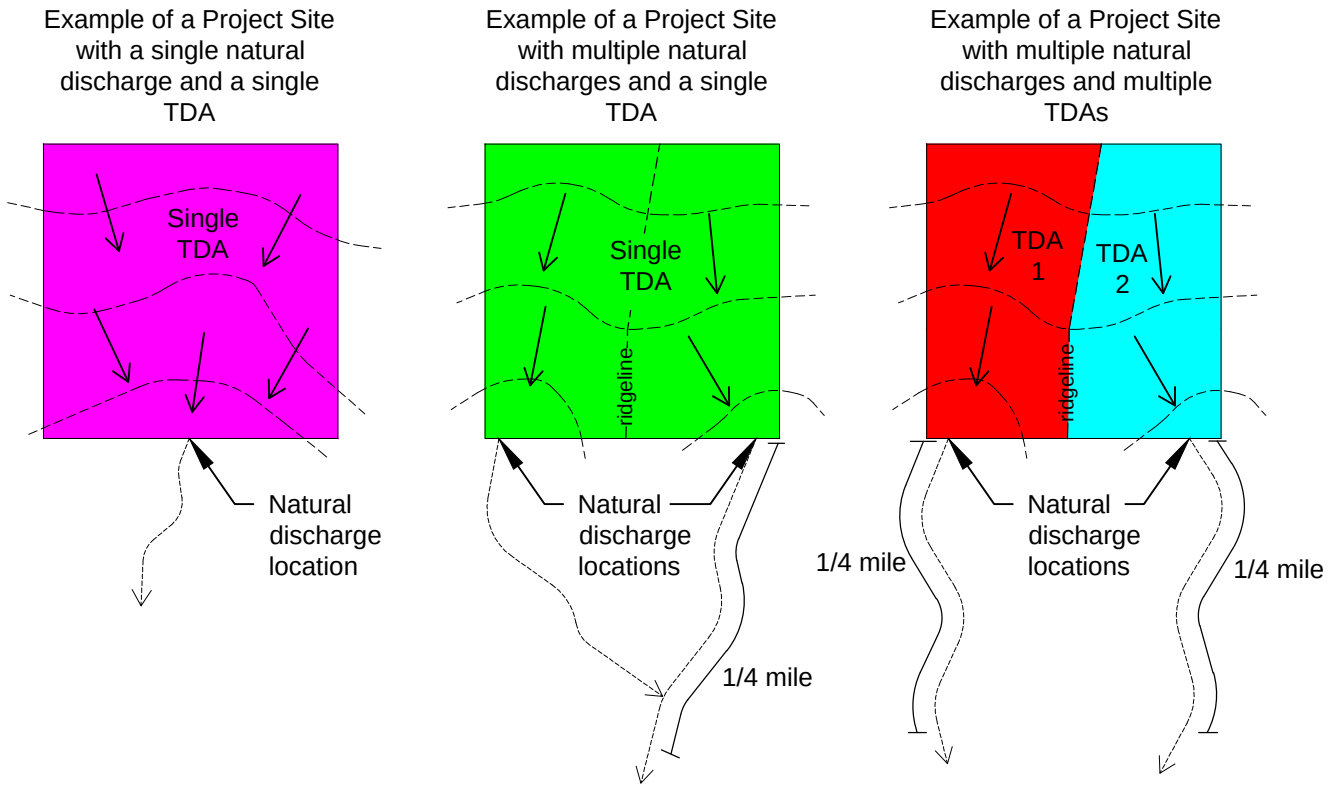

NOT TO SCALE

DEPARTMENT OF ECOLOGY
State of Washington

Figure I-G.1
Example TDA Delineations

Revised June 2015

Please see *http://www.ecy.wa.gov/copyright.html* for copyright notice including permissions, limitation of liability, and disclaimer.

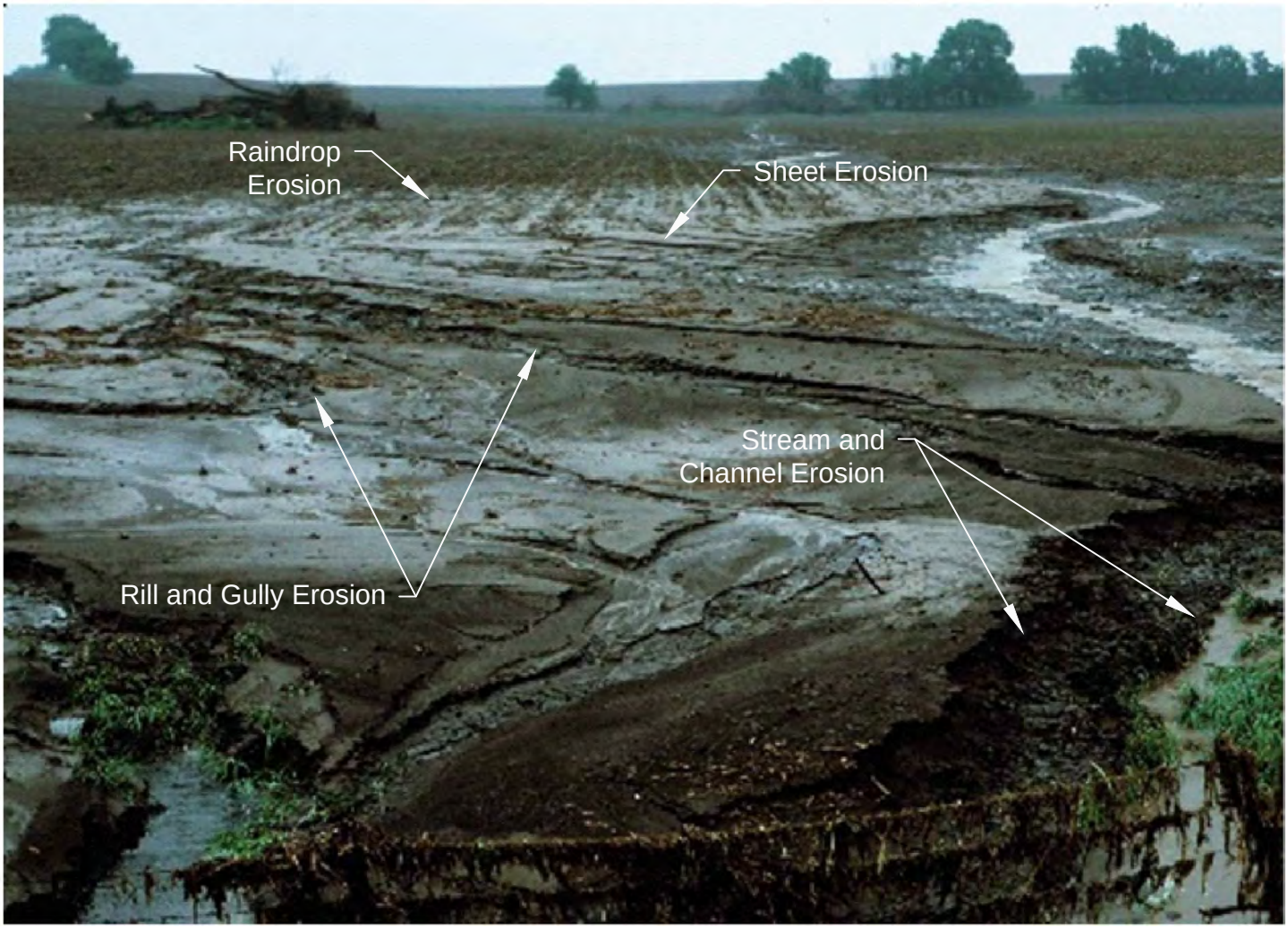

Photo by Lynn Betts, USDA Natural Resources Conservation

DEPARTMENT OF
ECOLOGY
State of Washington

Figure II-1.5.1
Types of Erosion

Revised June 2015

Please see *http://www.ecy.wa.gov/copyright.html* for copyright notice including permissions, limitation of liability, and disclaimer.

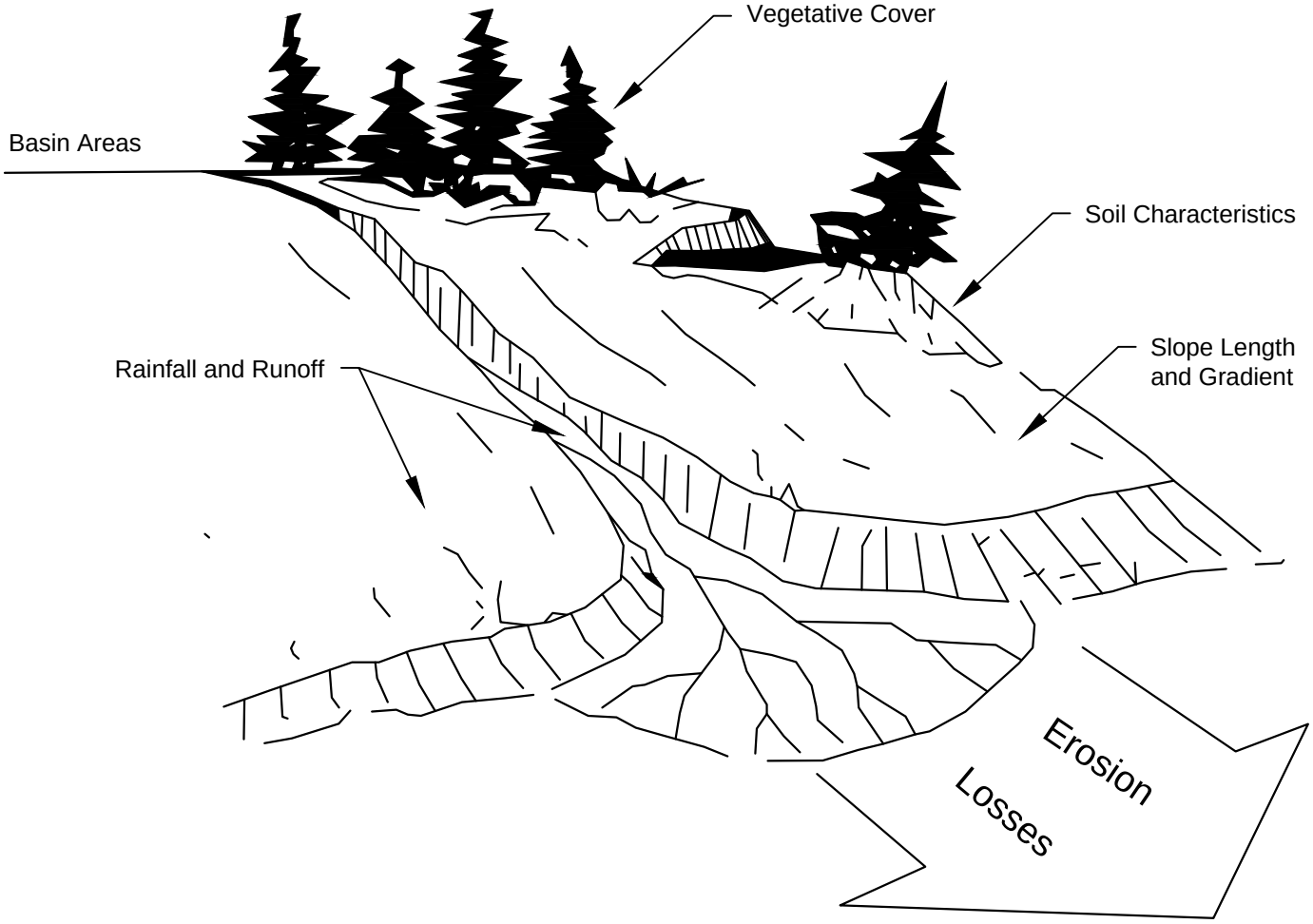

NOT TO SCALE

DEPARTMENT OF
ECOLOGY
State of Washington

Figure II-1.6.1
Factors Influencing Erosion Potential

Revised June 2015

Please see *http://www.ecy.wa.gov/copyright.html* for copyright notice including permissions, limitation of liability, and disclaimer.

NOT TO SCALE

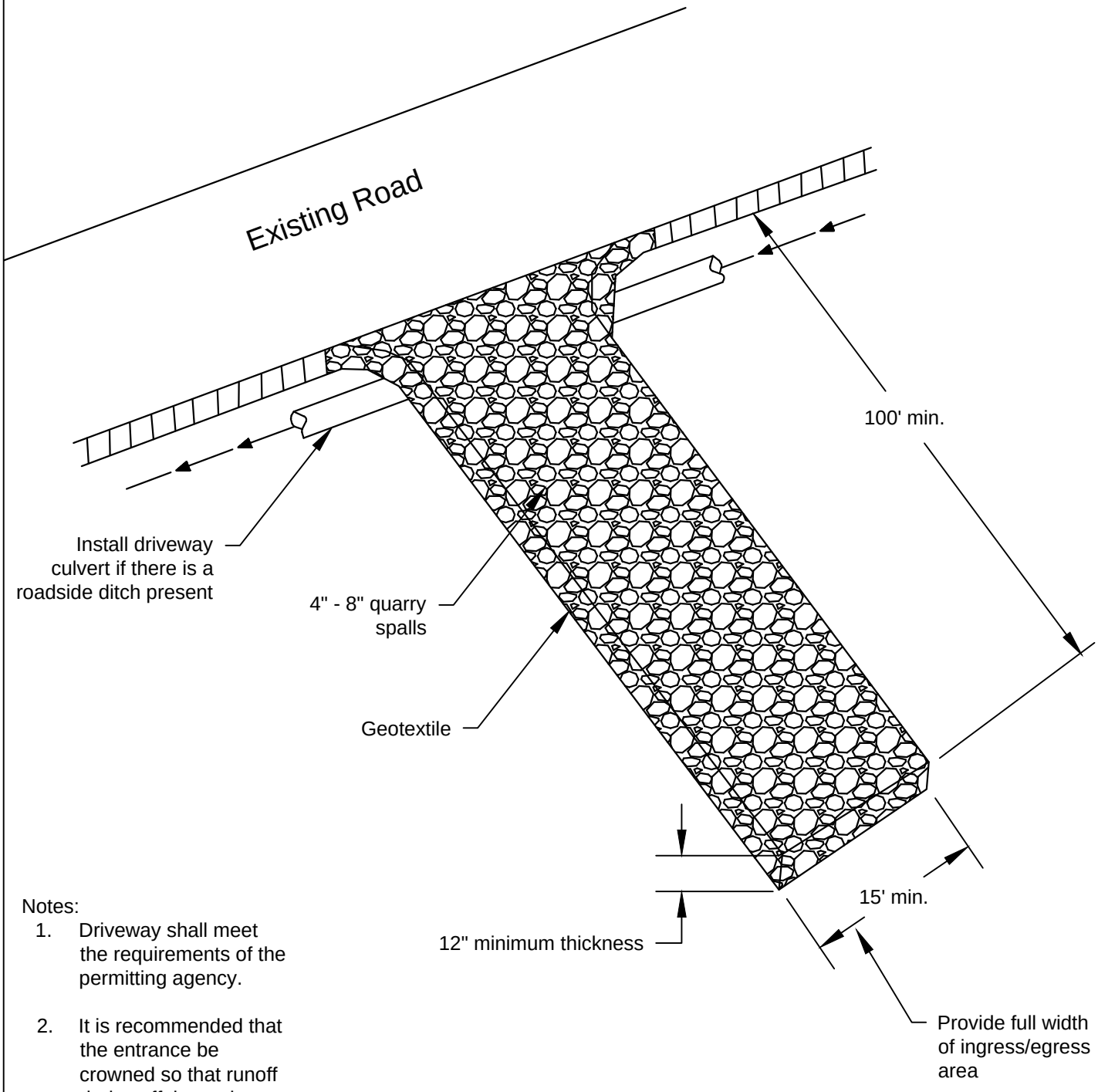

Notes:

1. Driveway shall meet the requirements of the permitting agency.

2. It is recommended that the entrance be crowned so that runoff drains off the pad.

DEPARTMENT OF ECOLOGY
State of Washington

Figure II-4.1.1
Stabilized Construction Entrance

Revised June 2015

Please see *http://www.ecy.wa.gov/copyright.html* for copyright notice including permissions, limitation of liability, and disclaimer.

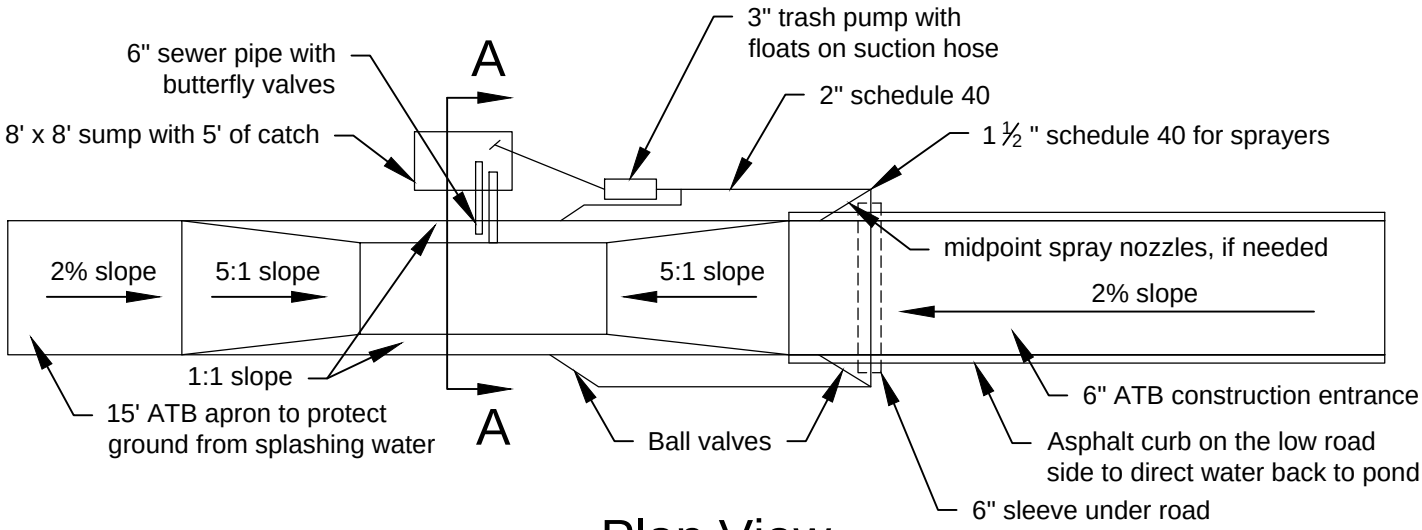

Plan View

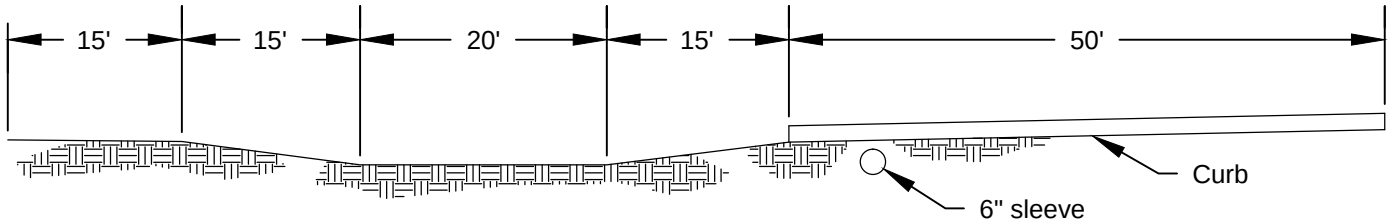

Elevation View

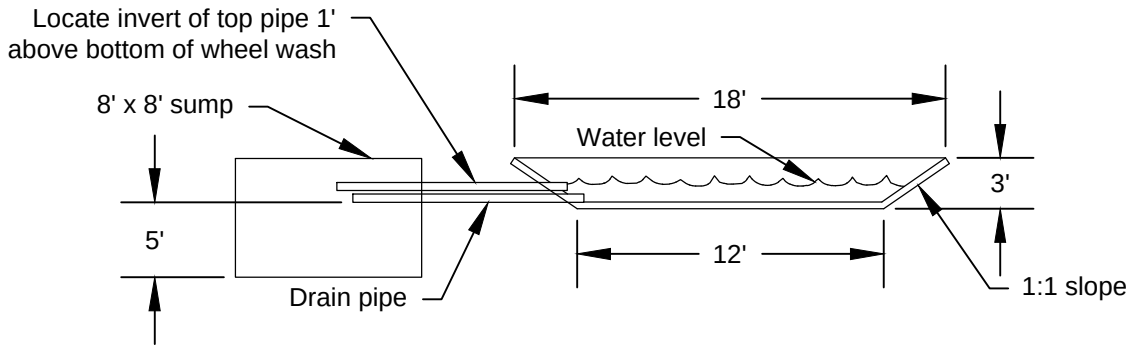

Section A-A

Notes:

1. Build 8' x 8' sump to accomodate cleaning by trackhoe.

NOT TO SCALE

DEPARTMENT OF
ECOLOGY
State of Washington

Figure II-4.1.2
Wheel Wash

Revised June 2015

Please see *http://www.ecy.wa.gov/copyright.html* for copyright notice including permissions, limitation of liability, and disclaimer.

NOT TO SCALE

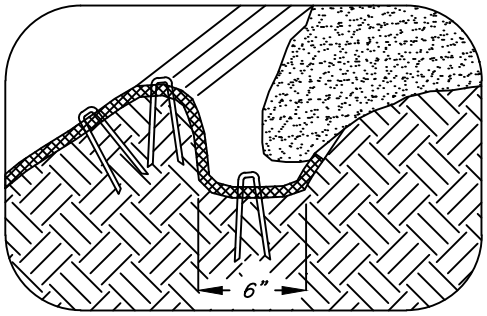

LONGITUDINAL ANCHOR TRENCH

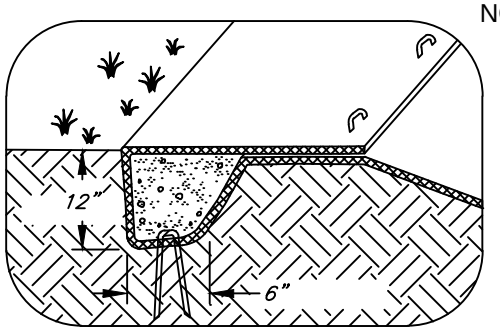

TERMINAL SLOPE AND CHANNEL ANCHOR TRENCH

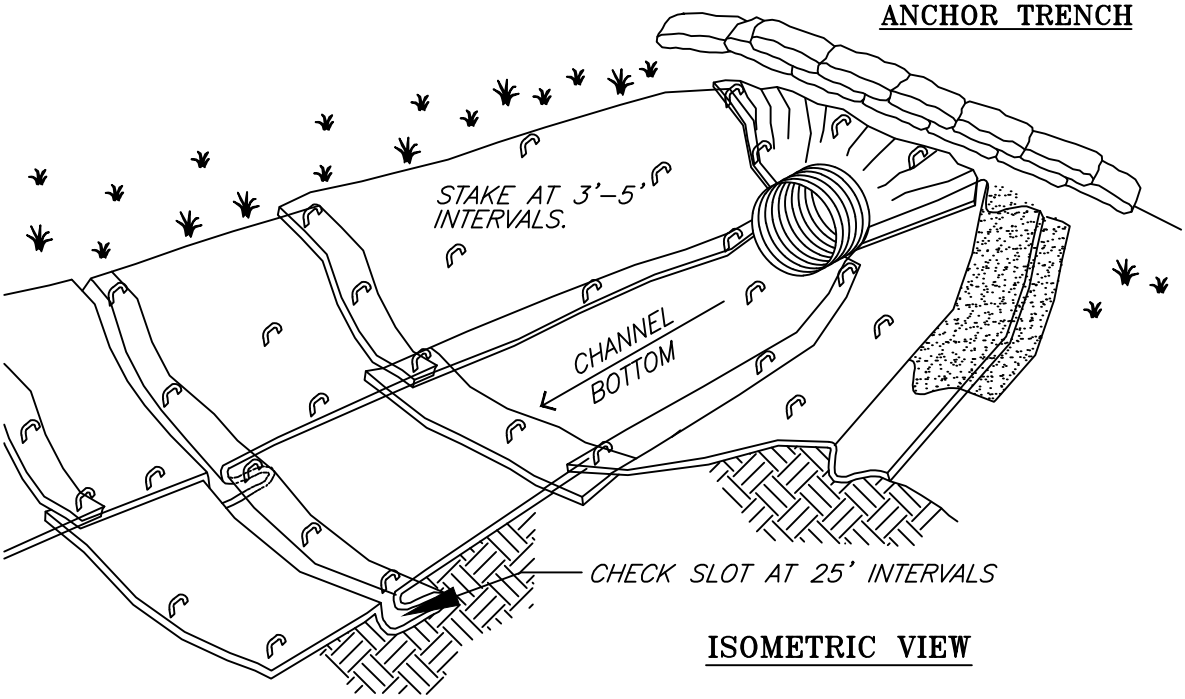

ISOMETRIC VIEW

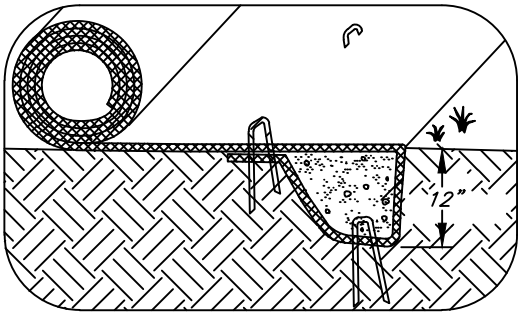

INITIAL CHANNEL ANCHOR TRENCH

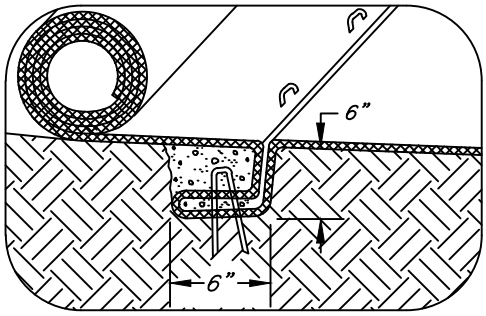

INTERMITTENT CHECK SLOT

Source: Clackamas County 2009 Erosion Prevention Planning and Design Manual

Notes:

1. Check slots to be constructed per manufacturers specifications.
2. Staking or stapling layout per manufacturers specifications.

DEPARTMENT OF ECOLOGY
State of Washington

Figure II-4.1.3
Channel Installation

Revised June 2015

Please see *http://www.ecy.wa.gov/copyright.html* for copyright notice including permissions, limitation of liability, and disclaimer.

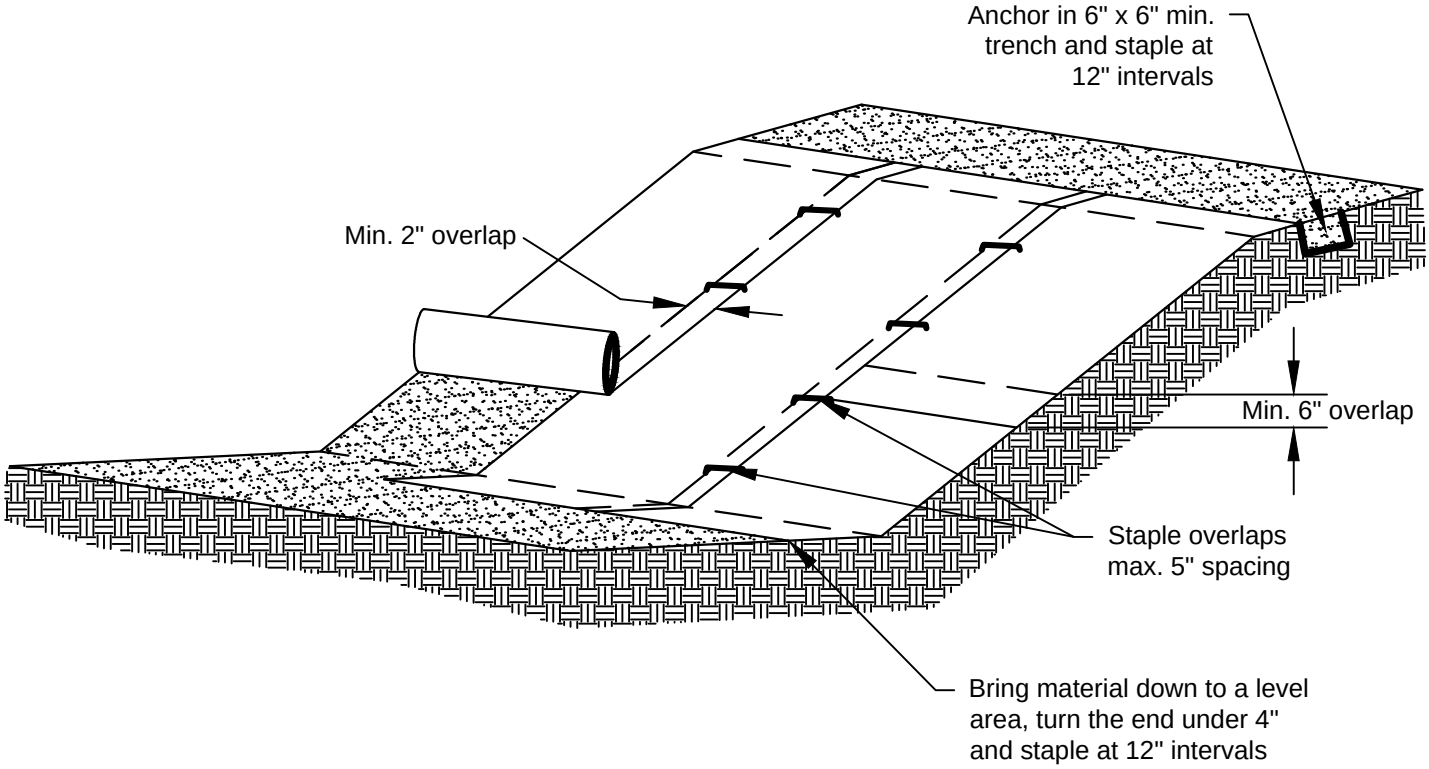

Notes:

1. Slope surface shall be smooth before placement for proper soil contact.
2. Stapling pattern as per manufacturer's recommendations.
3. Do not stretch blankets/mattings tight - allow the rolls to mold to any irregularities.
4. For slopes less than 3H:1V, rolls may be placed in horizontal strips.
5. If there is a berm at the top of the slope, anchor upslope of the berm.
6. Lime, fertilize, and seed before installation. Planting of shrubs, trees, etc. should occur after installation.

NOT TO SCALE

DEPARTMENT OF ECOLOGY
State of Washington

Figure II-4.1.4
Slope Installation

Revised June 2015

Please see *http://www.ecy.wa.gov/copyright.html* for copyright notice including permissions, limitation of liability, and disclaimer.

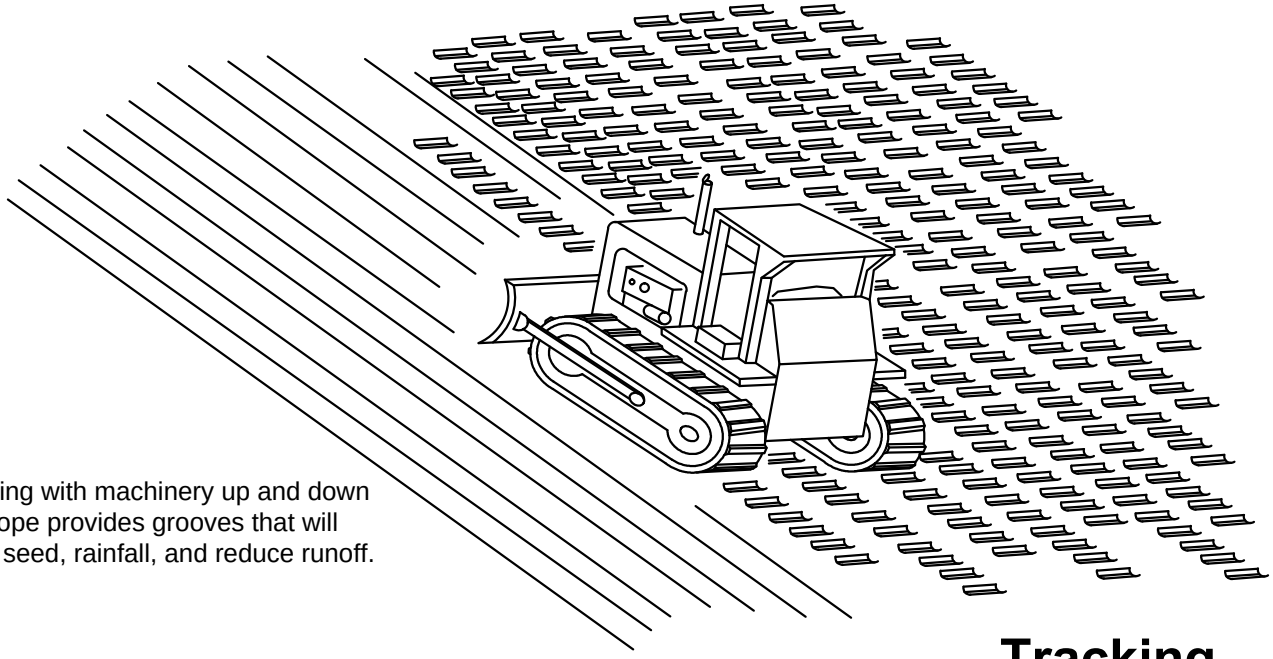

Tracking with machinery up and down the slope provides grooves that will catch seed, rainfall, and reduce runoff.

Tracking

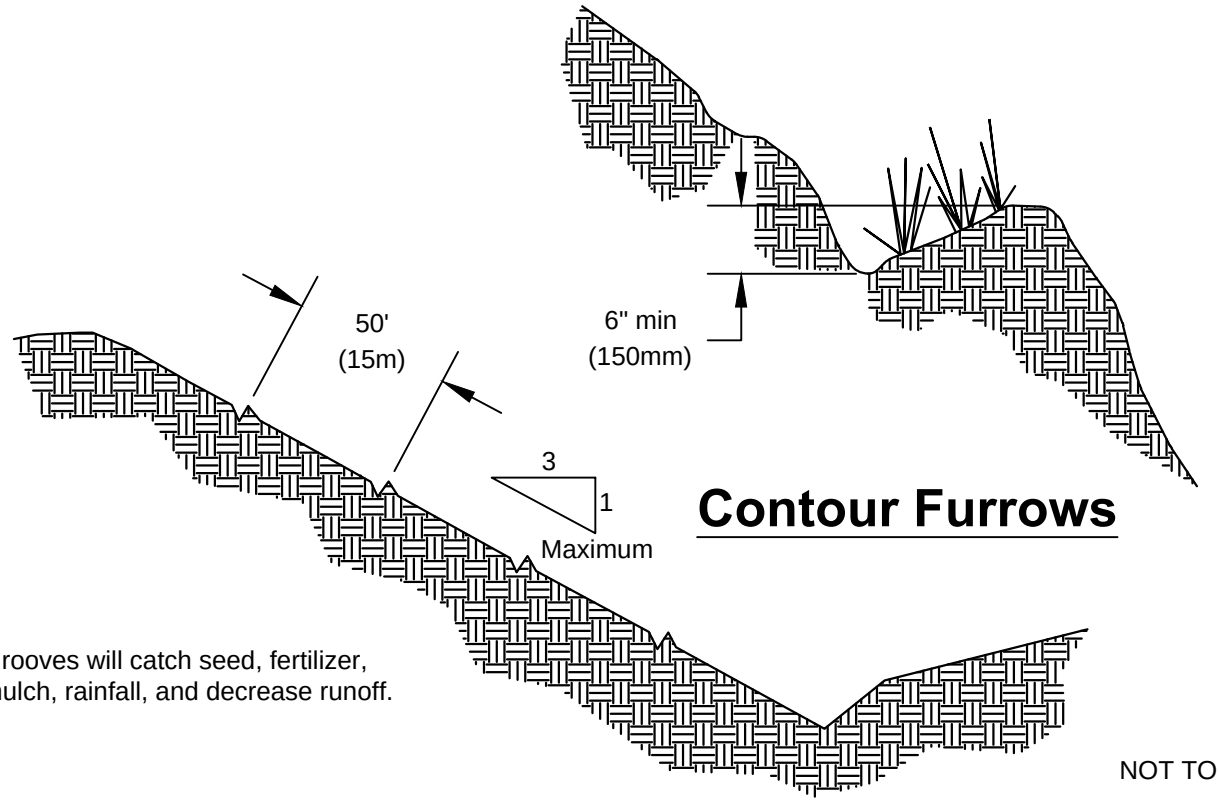

Contour Furrows

Grooves will catch seed, fertilizer, mulch, rainfall, and decrease runoff.

NOT TO SCALE

DEPARTMENT OF
ECOLOGY
State of Washington

Figure II-4.1.5
Surface Roughening by Tracking and Contour Furrows

Revised June 2015

Please see *http://www.ecy.wa.gov/copyright.html* for copyright notice including permissions, limitation of liability, and disclaimer.

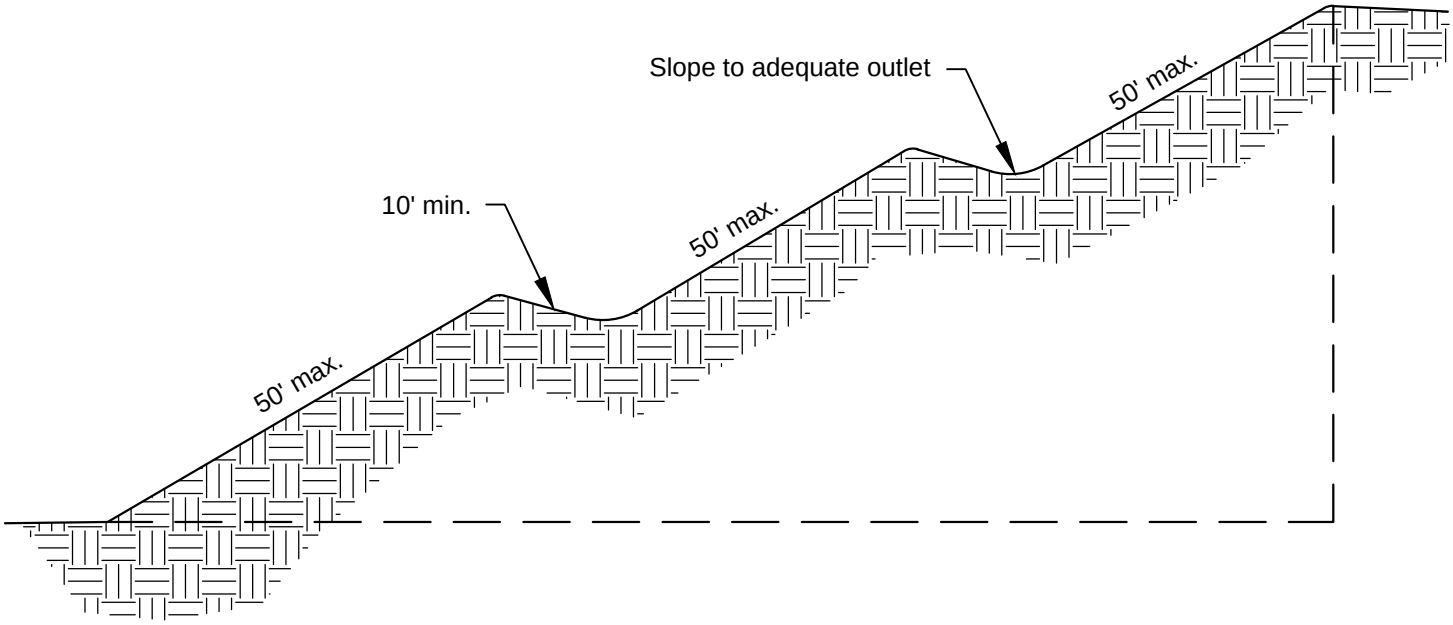

NOT TO SCALE

DEPARTMENT OF
ECOLOGY
State of Washington

Figure II-4.1.6
Gradient Terraces

Revised June 2015

Please see *http://www.ecy.wa.gov/copyright.html* for copyright notice including permissions, limitation of liability, and disclaimer.

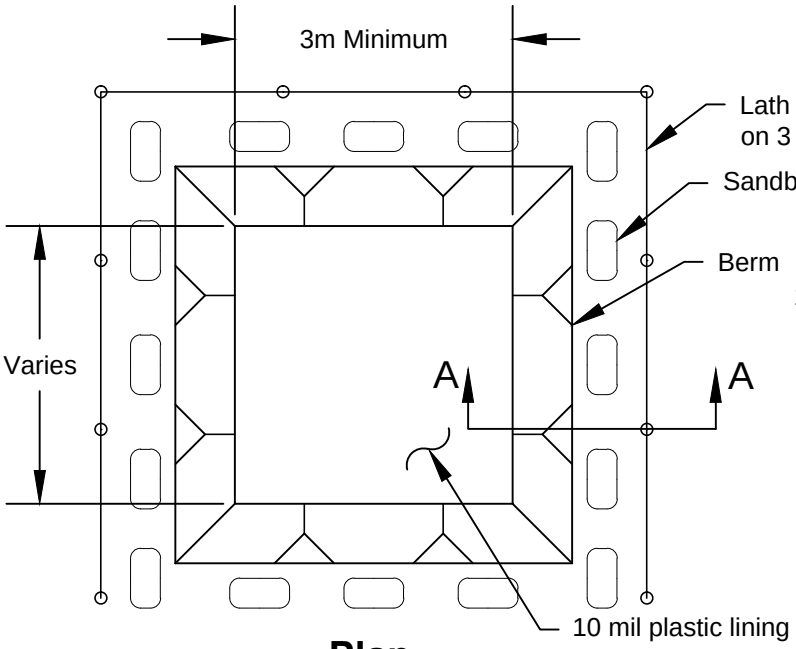

Plan

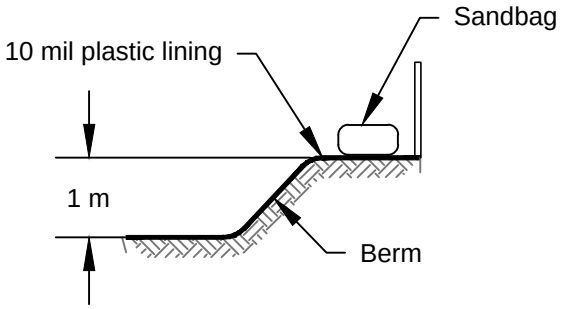

Section A-A

Type "Below Grade"

Notes:

1. Actual layout determined in the field.
2. A concrete washout sign shall be installed within 10 m of the temporary concrete washout facility.

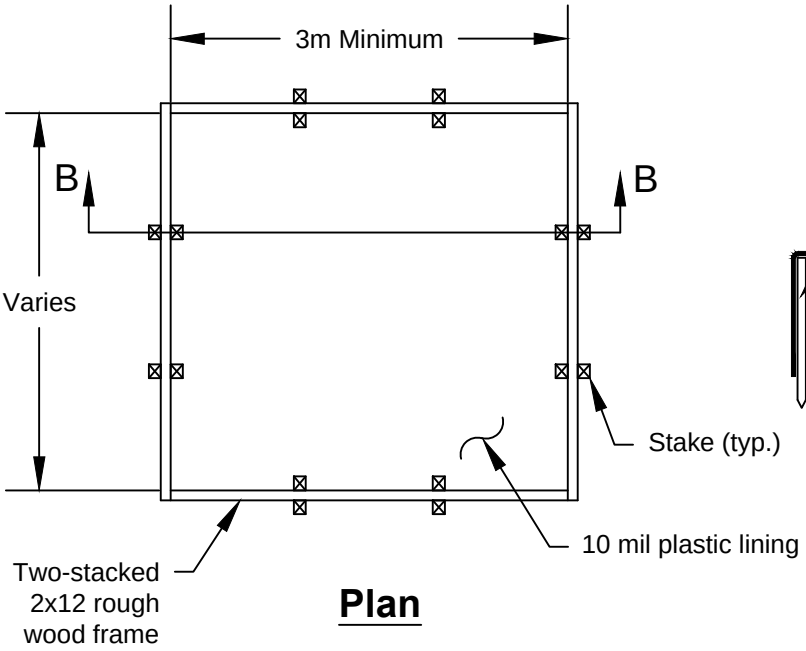

Plan

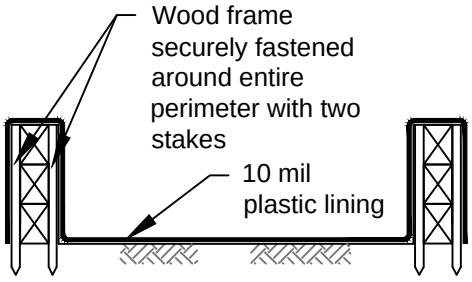

Section B-B

Type "Above Grade" with Wood Planks

NOT TO SCALE

DEPARTMENT OF ECOLOGY State of Washington

Figure II-4.1.7a
Concrete Washout Area

Revised June 2015

Please see *http://www.ecy.wa.gov/copyright.html* for copyright notice including permissions, limitation of liability, and disclaimer.

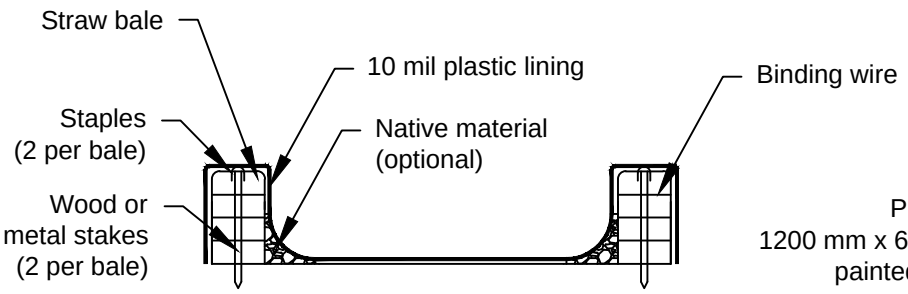

Section B-B

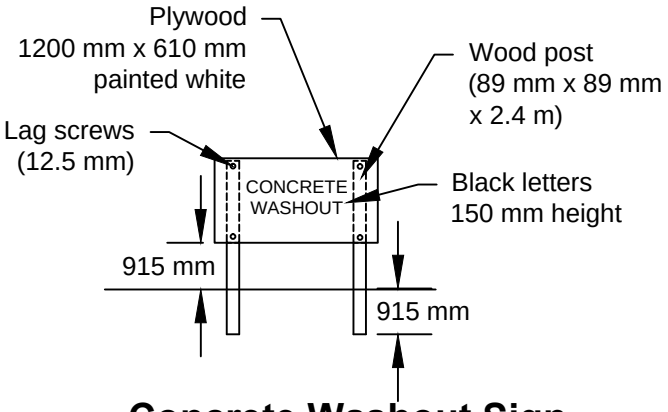

Concrete Washout Sign Detail (or equivalent)

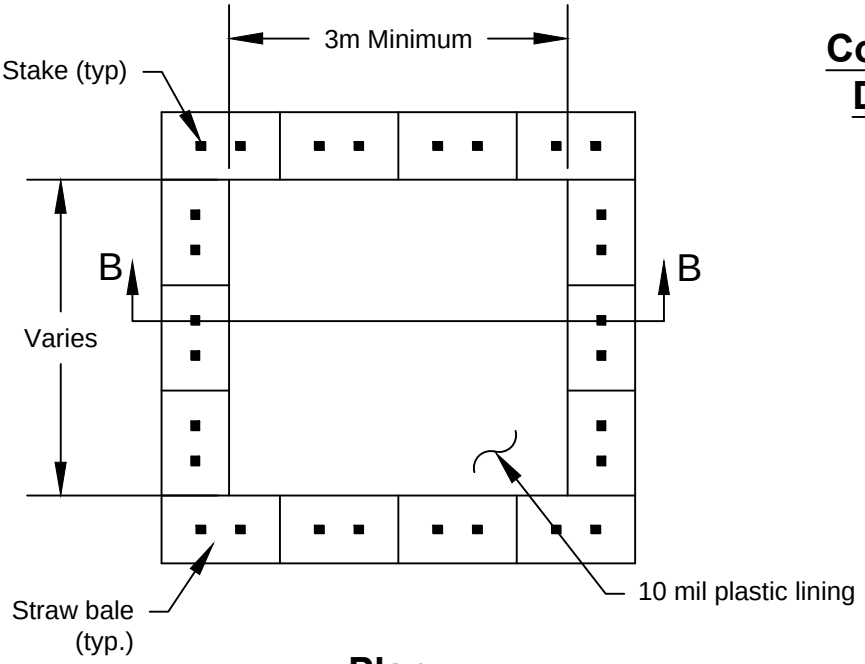

Plan

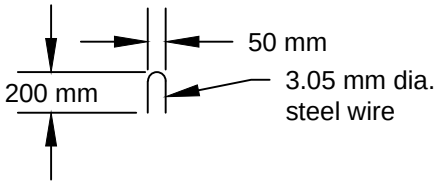

Staple Detail

Notes:

1. Actual layout determined in the field.
2. The concrete washout sign shall be installed within 10 m of the temporary concrete washout facility.

Type "Above Grade" with Straw Bales

NOT TO SCALE

DEPARTMENT OF
ECOLOGY
State of Washington

Figure II-4.1.7b
Concrete Washout Area

Revised June 2015

Please see *http://www.ecy.wa.gov/copyright.html* for copyright notice including permissions, limitation of liability, and disclaimer.

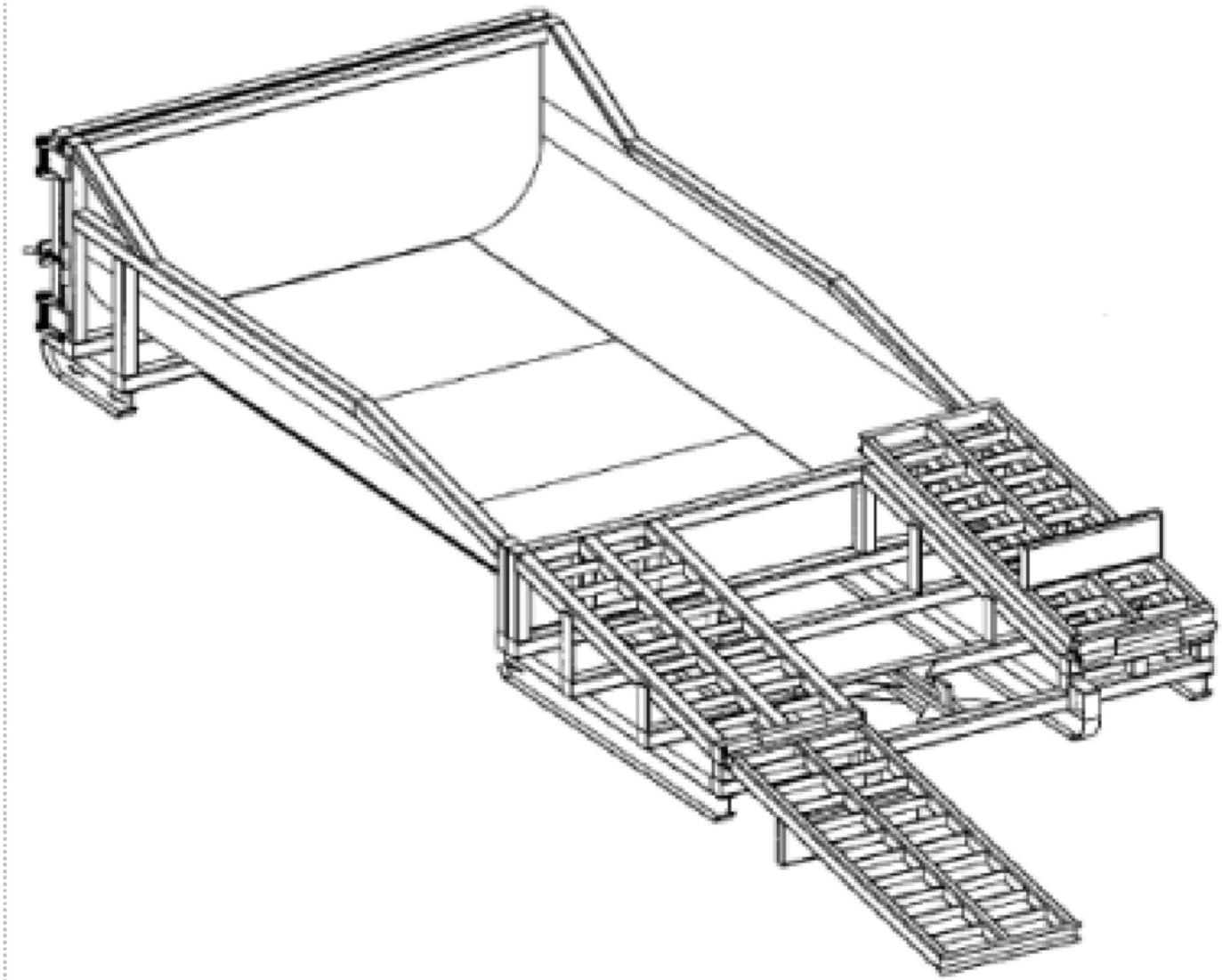

NOT TO SCALE

DEPARTMENT OF
ECOLOGY
State of Washington

Figure II-4.1.8
Prefabricated Concrete Washout Container w/Ramp

Revised June 2015

Please see *http://www.ecy.wa.gov/copyright.html* for copyright notice including permissions, limitation of liability, and disclaimer.

Typical V-Shaped Channel Cross-Section

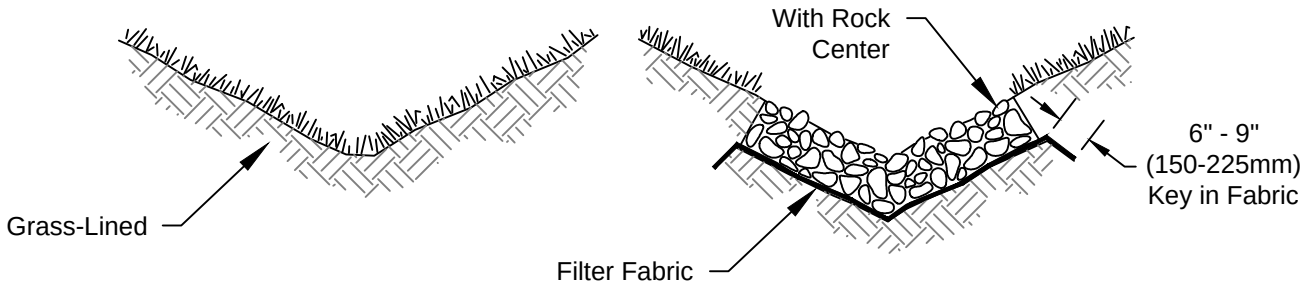

Typical Parabolic Channel Cross-Section

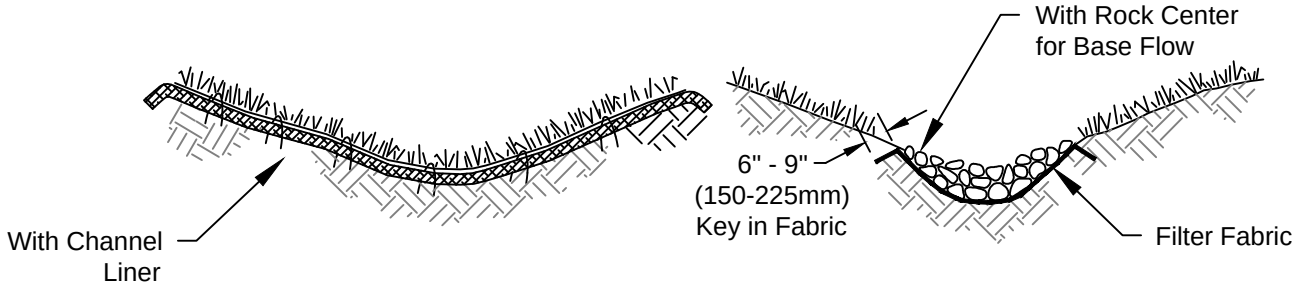

Typical Trapezoidal Channel Cross-Section

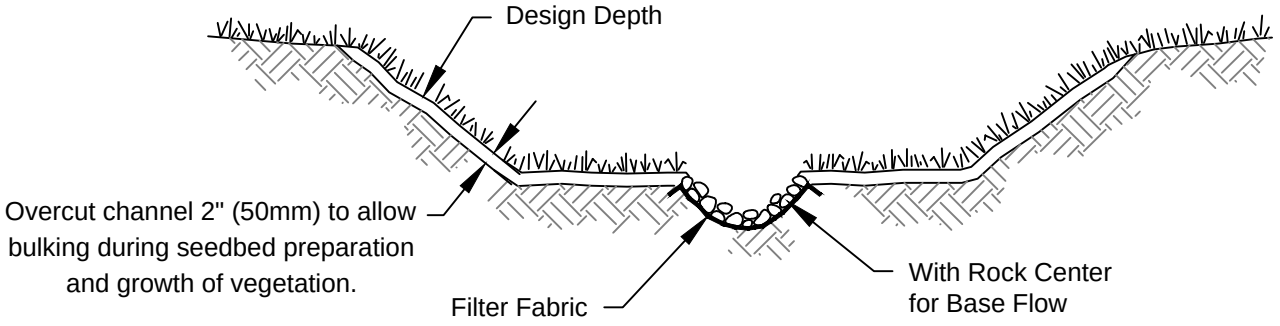

NOT TO SCALE

DEPARTMENT OF
ECOLOGY
State of Washington

Figure II-4.2.1
Typical Grass-Lined Channels

Revised June 2015

Please see *http://www.ecy.wa.gov/copyright.html* for copyright notice including permissions, limitation of liability, and disclaimer.

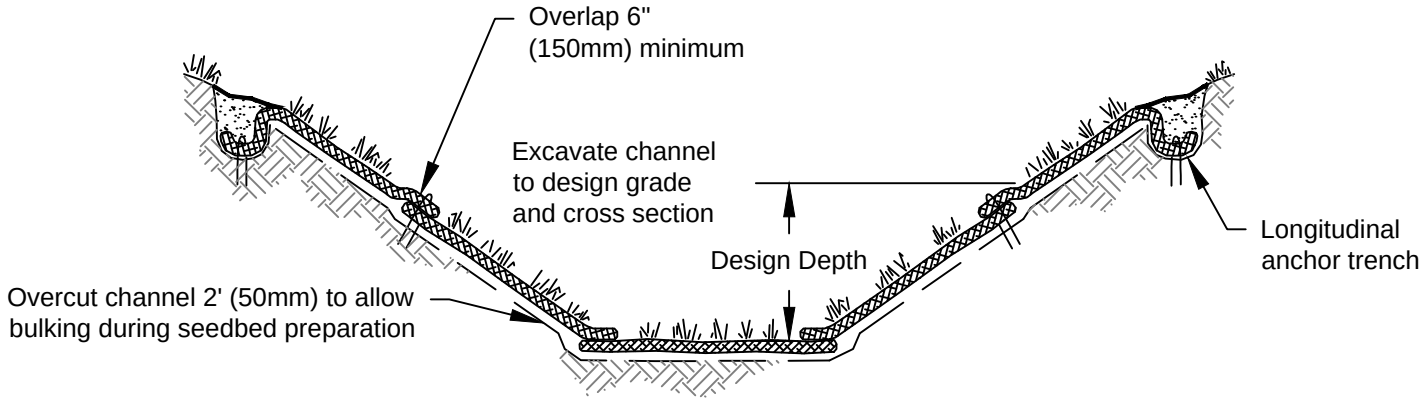

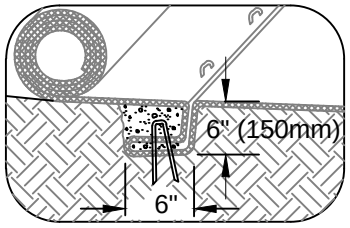

Typical installation with
erosion control blankets
or turf reinforcement mats

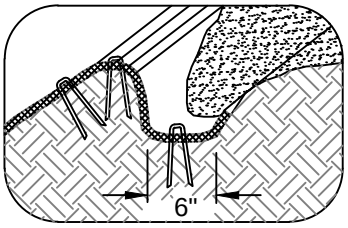

Intermittent Check Slot

Longitudinal Anchor Trench

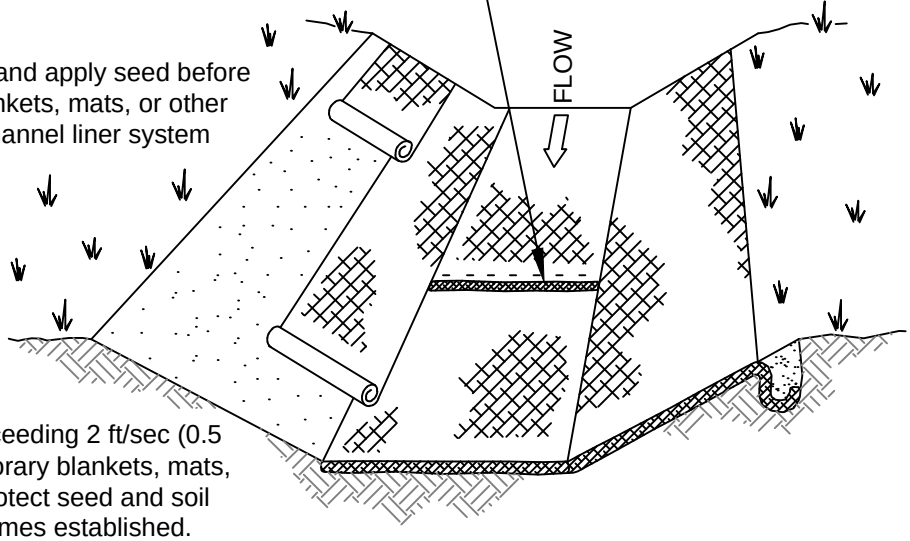

Notes:

1. Design velocities exceeding 2 ft/sec (0.5 m/sec) require temporary blankets, mats, or similar liners to protect seed and soil until vegetation becomes established.
2. Grass-lined channels with design velocities exceeding 6 ft/sec (2 m/sec) should include turf reinforcement mats.

NOT TO SCALE

DEPARTMENT OF
ECOLOGY
State of Washington

Figure II-4.2.2
Temporary Channel Liners

Revised July 2015

Please see *http://www.ecy.wa.gov/copyright.html* for copyright notice including permissions, limitation of liability, and disclaimer.

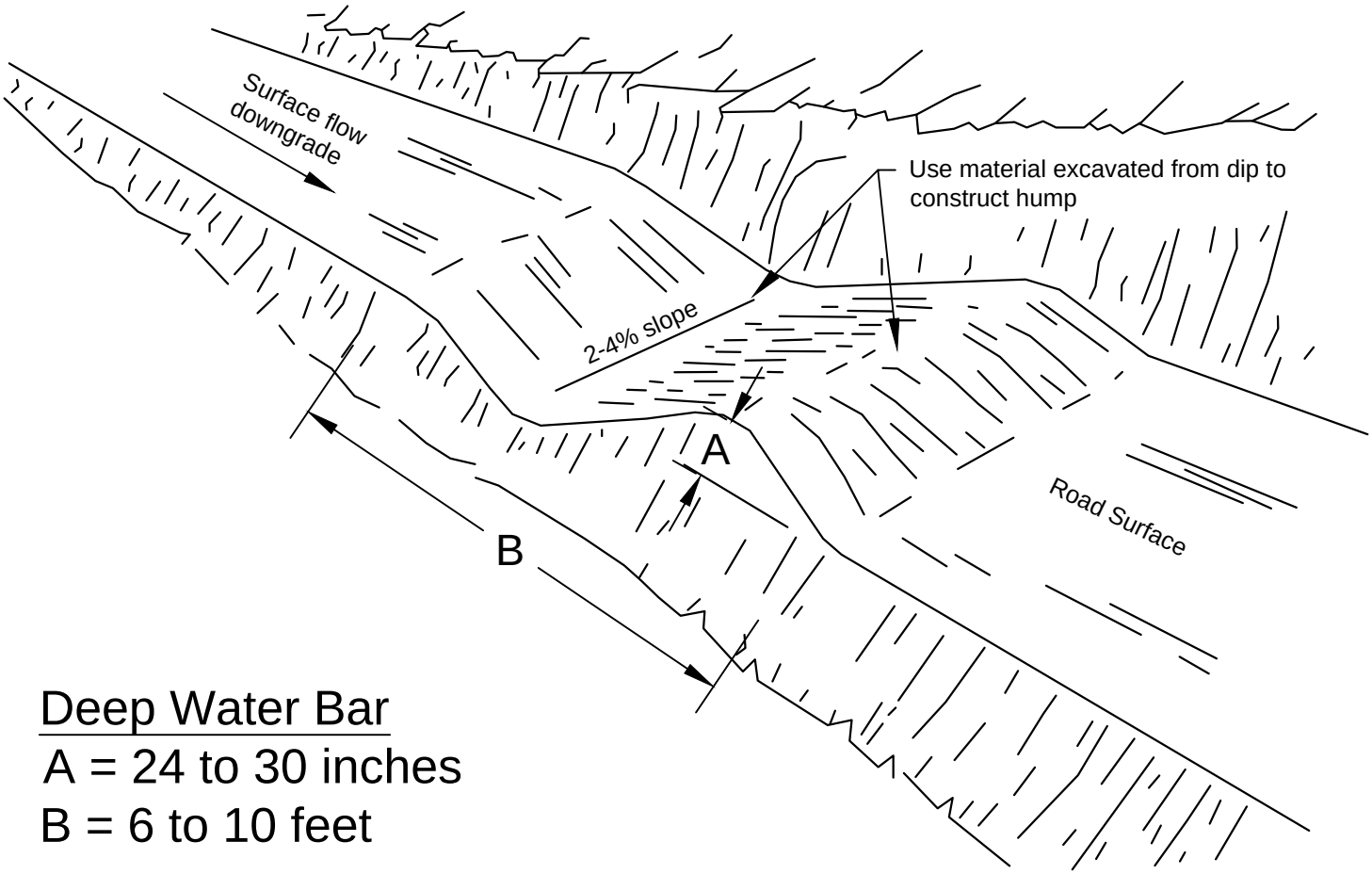

Deep Water Bar

A = 24 to 30 inches

B = 6 to 10 feet

Shallow Water Bar

A = 8 to 12 inches

B = 6 to 12 feet

NOT TO SCALE

DEPARTMENT OF ECOLOGY State of Washington

Figure II-4.2.3
Water Bar

Revised July 2015

Please see *http://www.ecy.wa.gov/copyright.html* for copyright notice including permissions, limitation of liability, and disclaimer.

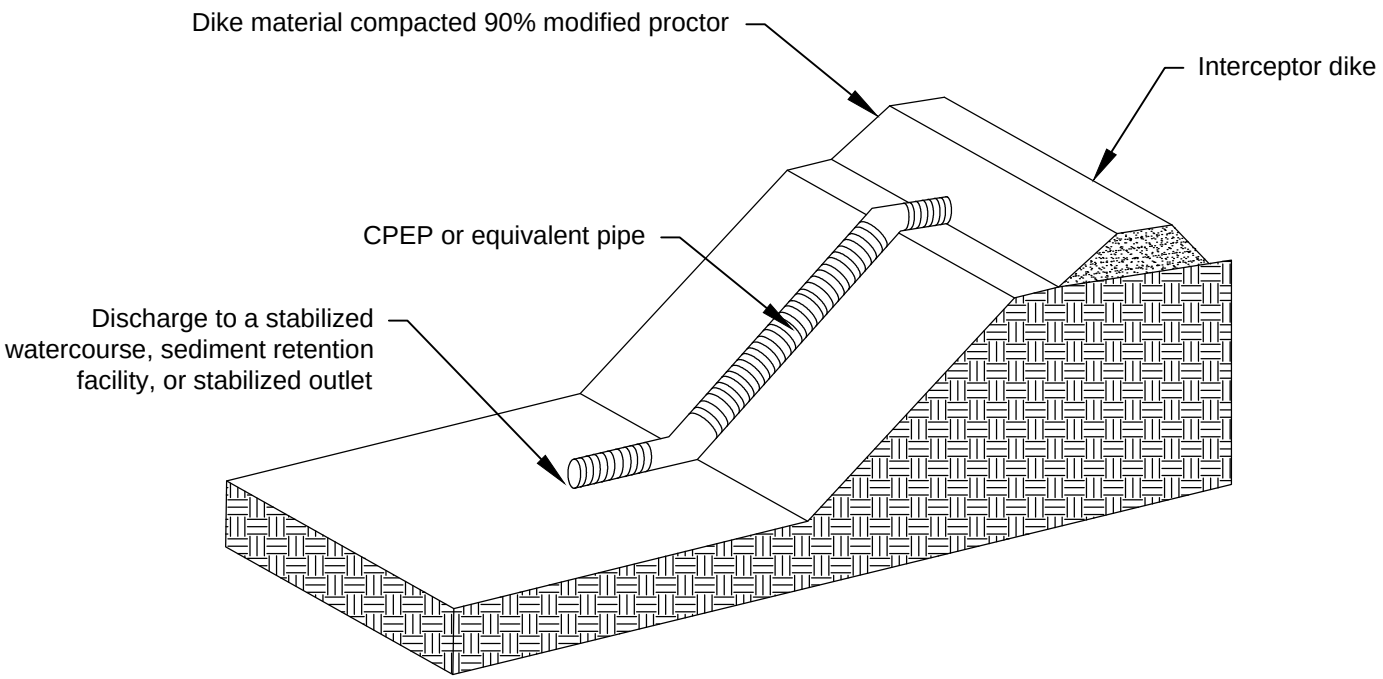

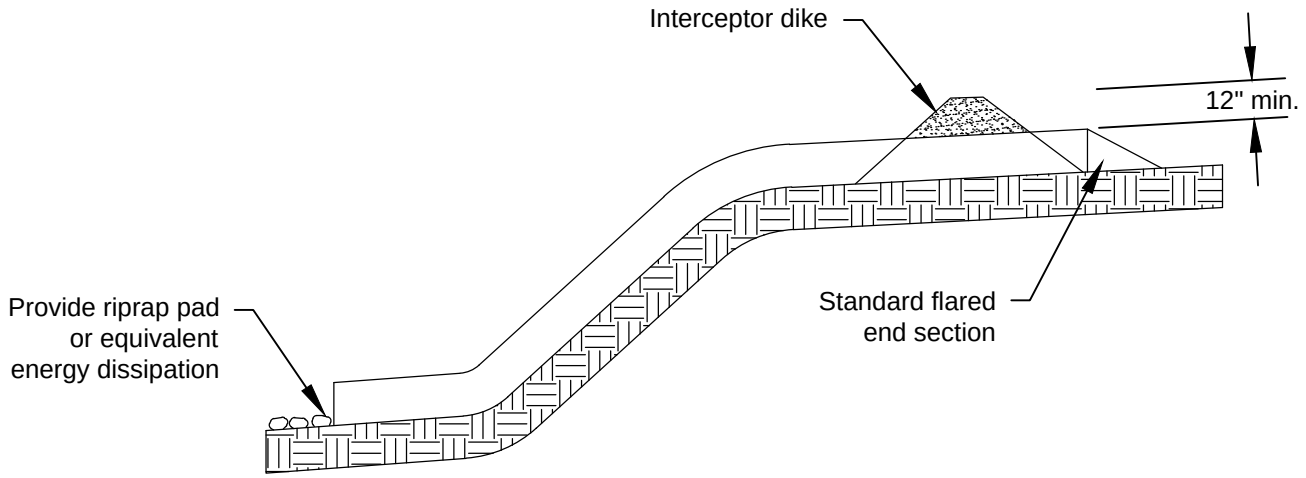

Notes:

1. Inlet and all sections must be securely fastened together with gasketed watertight fittings

NOT TO SCALE

DEPARTMENT OF ECOLOGY
State of Washington

Figure II-4.2.4
Pipe Slope Drain

Revised July 2015

Please see *http://www.ecy.wa.gov/copyright.html* for copyright notice including permissions, limitation of liability, and disclaimer.

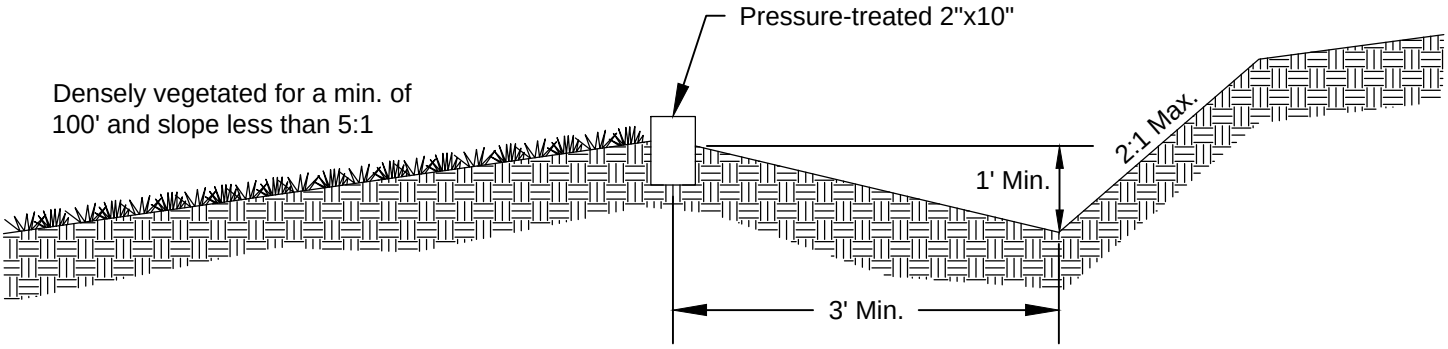

NOT TO SCALE

DEPARTMENT OF
ECOLOGY
State of Washington

Figure II-4.2.5
Cross Section of Level Spreader

Revised July 2015

Please see *http://www.ecy.wa.gov/copyright.html* for copyright notice including permissions, limitation of liability, and disclaimer.

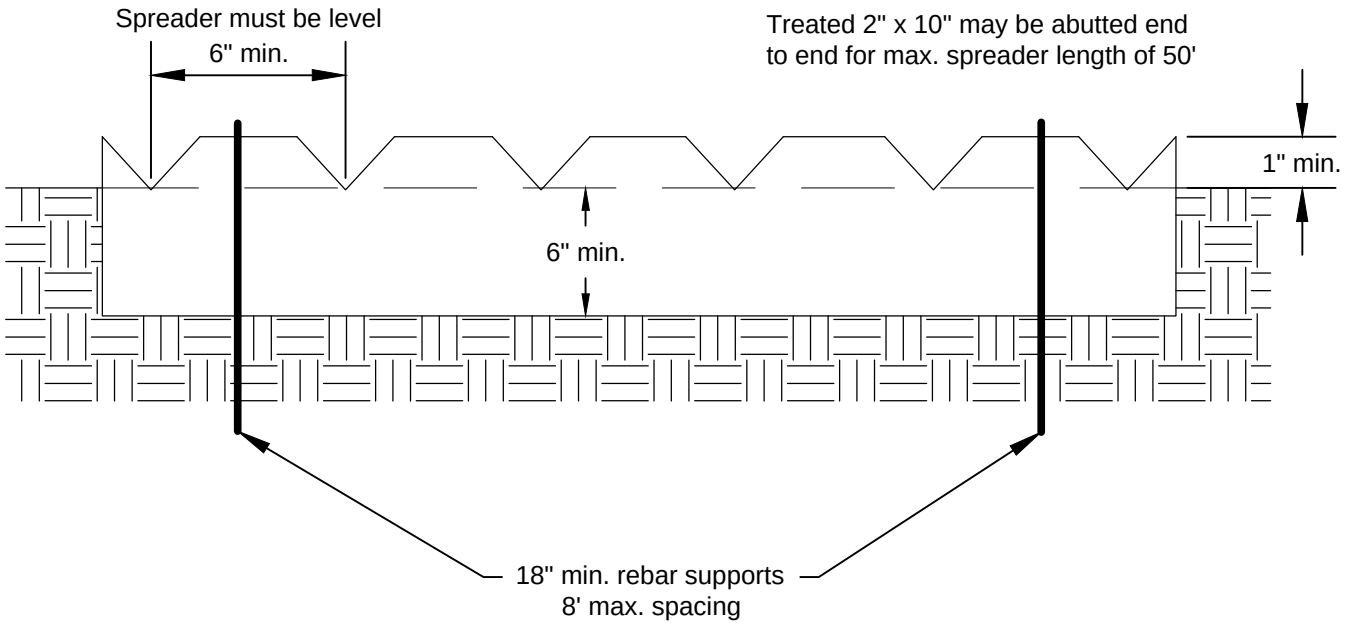

NOT TO SCALE

DEPARTMENT OF
ECOLOGY
State of Washington

Figure II-4.2.6
Detail of Level Spreader

Revised July 2015

Please see *http://www.ecy.wa.gov/copyright.html* for copyright notice including permissions, limitation of liability, and disclaimer.

View Looking Upstream

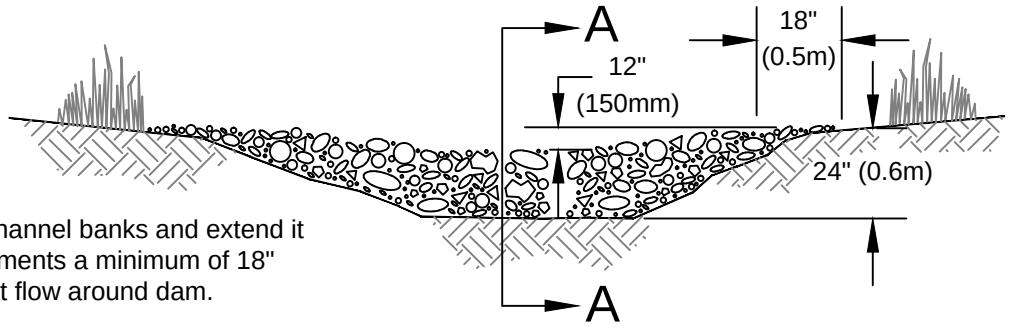

Note:
Key stone into channel banks and extend it beyond the abutments a minimum of 18" (0.5m) to prevent flow around dam.

Section A-A

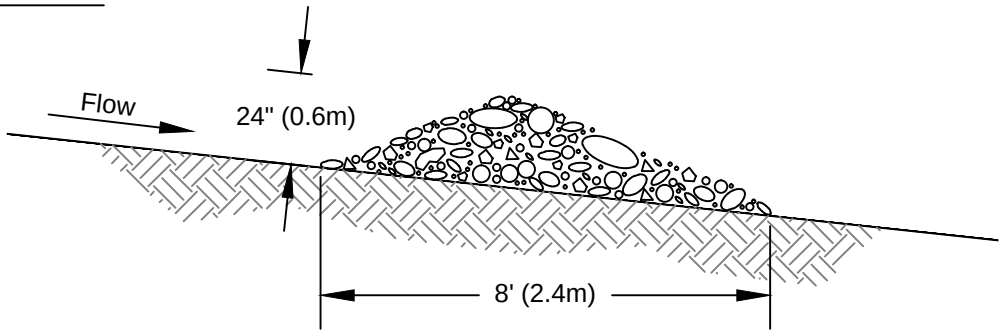

Spacing Between Check Dams

'L' = the distance such that points 'A' and 'B' are of equal elevation.

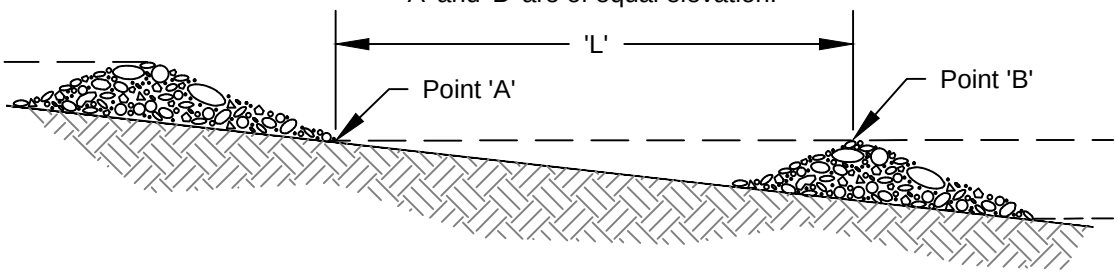

NOT TO SCALE

DEPARTMENT OF
ECOLOGY
State of Washington

Figure II-4.2.7
Rock Check Dam

Revised July 2015

Please see *http://www.ecy.wa.gov/copyright.html* for copyright notice including permissions, limitation of liability, and disclaimer.

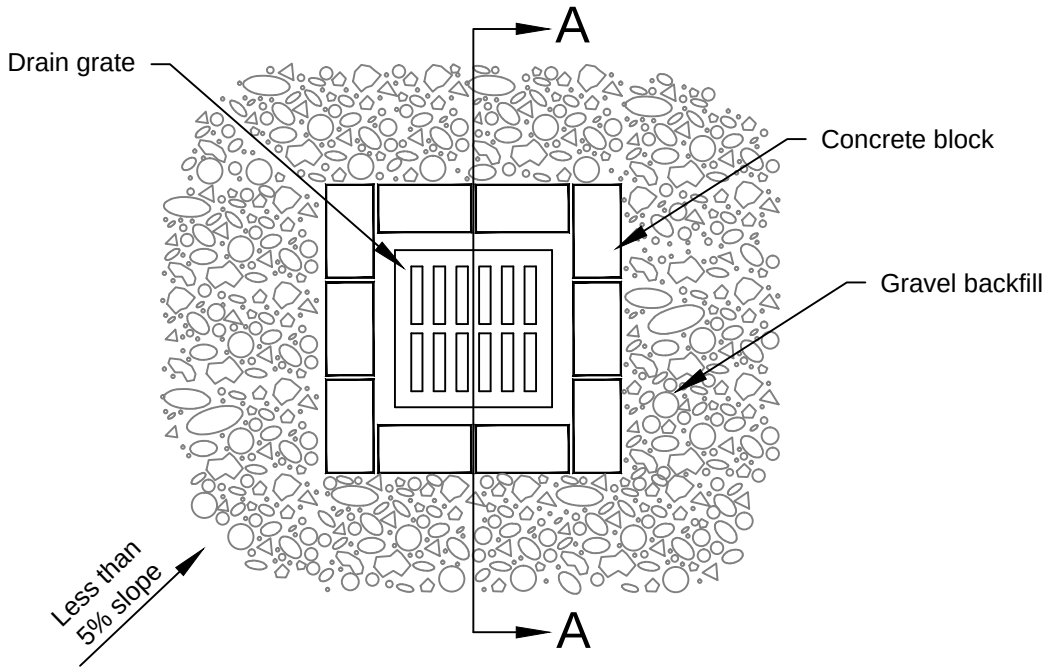

Plan View

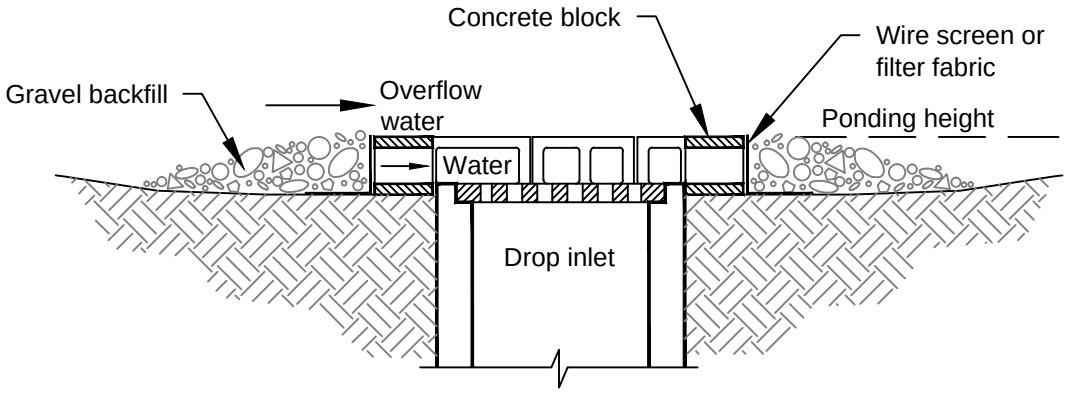

Section A-A

Notes:

1. Drop inlet sediment barriers are to be used for small, nearly level drainage areas. (less than 5%)
2. Excavate a basin of sufficient size adjacent to the drop inlet.
3. The top of the structure (ponding height) must be well below the ground elevation downslope to prevent runoff from bypassing the inlet. A temporary dike may be necessary on the downslope side of the structure.

NOT TO SCALE

DEPARTMENT OF
ECOLOGY
State of Washington

Figure II-4.2.8
Block and Gravel Filter

Revised August 2015

Please see *http://www.ecy.wa.gov/copyright.html* for copyright notice including permissions, limitation of liability, and disclaimer.

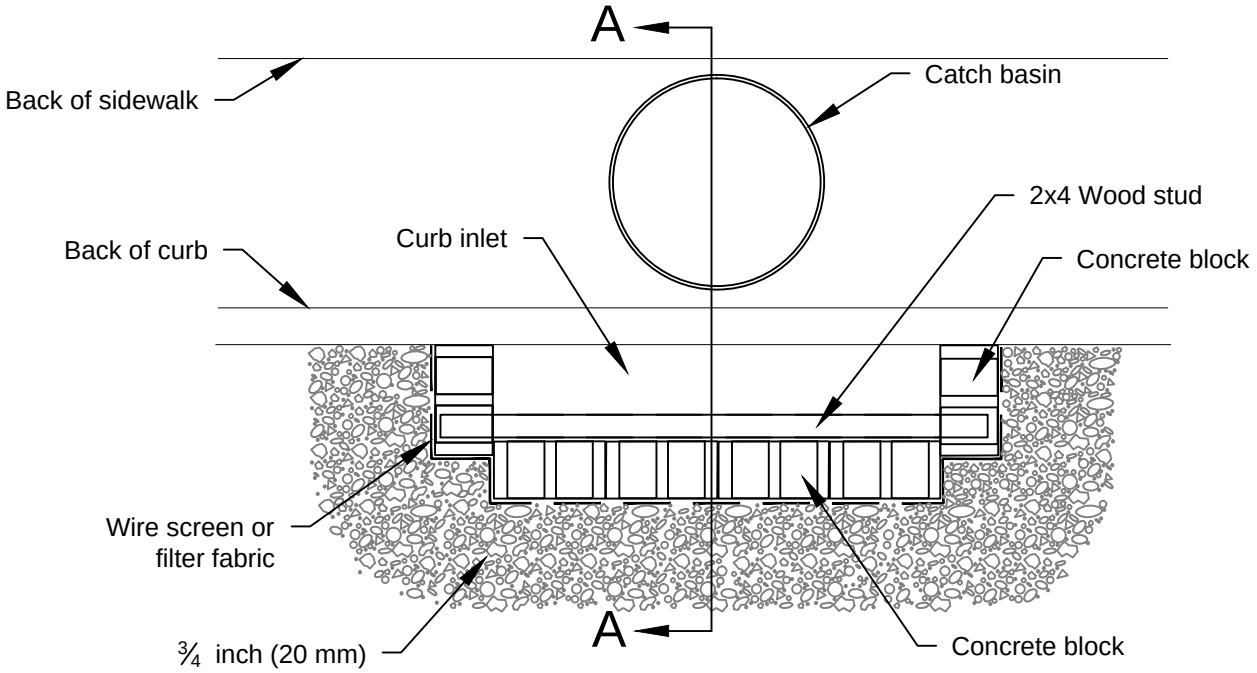

Plan View

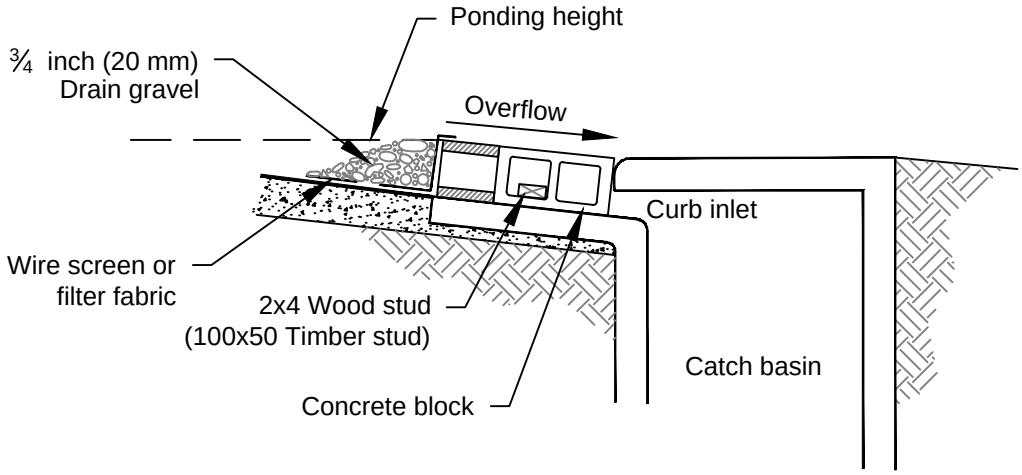

Section A-A

Notes:

1. Use block and gravel type sediment barrier when curb inlet is located in gently sloping street segment, where water can pond and allow sediment to separate from runoff.
2. Barrier shall allow for overflow from severe storm event.
3. Inspect barriers and remove sediment after each storm event. Sediment and gravel must be removed from the traveled way immediately.

NOT TO SCALE

DEPARTMENT OF
ECOLOGY
State of Washington

Figure II-4.2.9
Block and Gravel Curb Inlet Protection

Revised August 2015

Please see *http://www.ecy.wa.gov/copyright.html* for copyright notice including permissions, limitation of liability, and disclaimer.

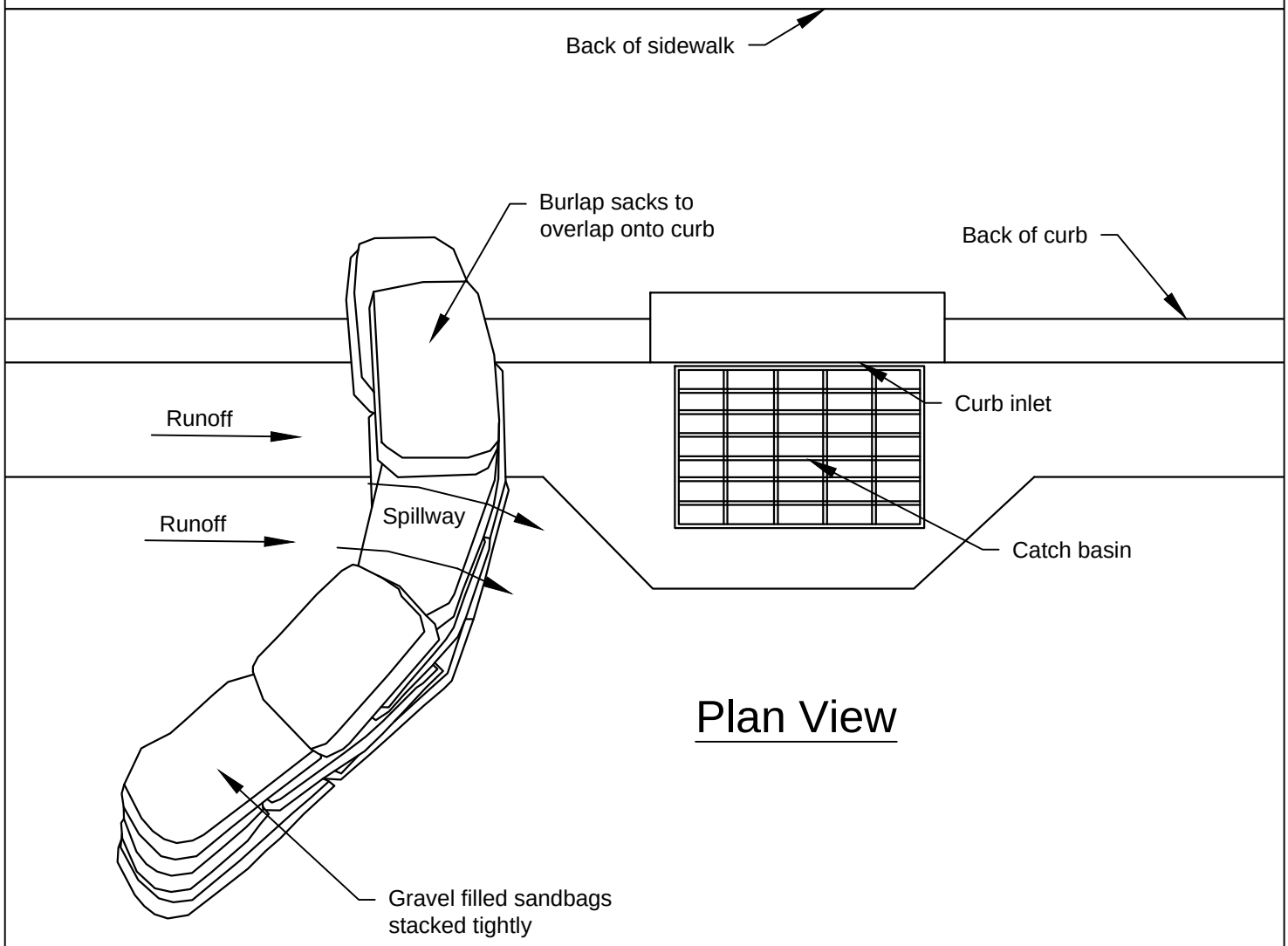

Notes:

1. Place curb type sediment barriers on gently sloping street segments, where water can pond and allow sediment to separate from runoff.
2. Sandbags of either burlap or woven 'geotextile' fabric, are filled with gravel, layered and packed tightly.
3. Leave a one sandbag gap in the top row to provide a spillway for overflow.
4. Inspect barriers and remove sediment after each storm event. Sediment and gravel must be removed from the traveled way immediately.

NOT TO SCALE

DEPARTMENT OF
ECOLOGY
State of Washington

Figure II-4.2.10
Curb and Gutter Barrier

Revised September 2015

Please see *http://www.ecy.wa.gov/copyright.html* for copyright notice including permissions, limitation of liability, and disclaimer.

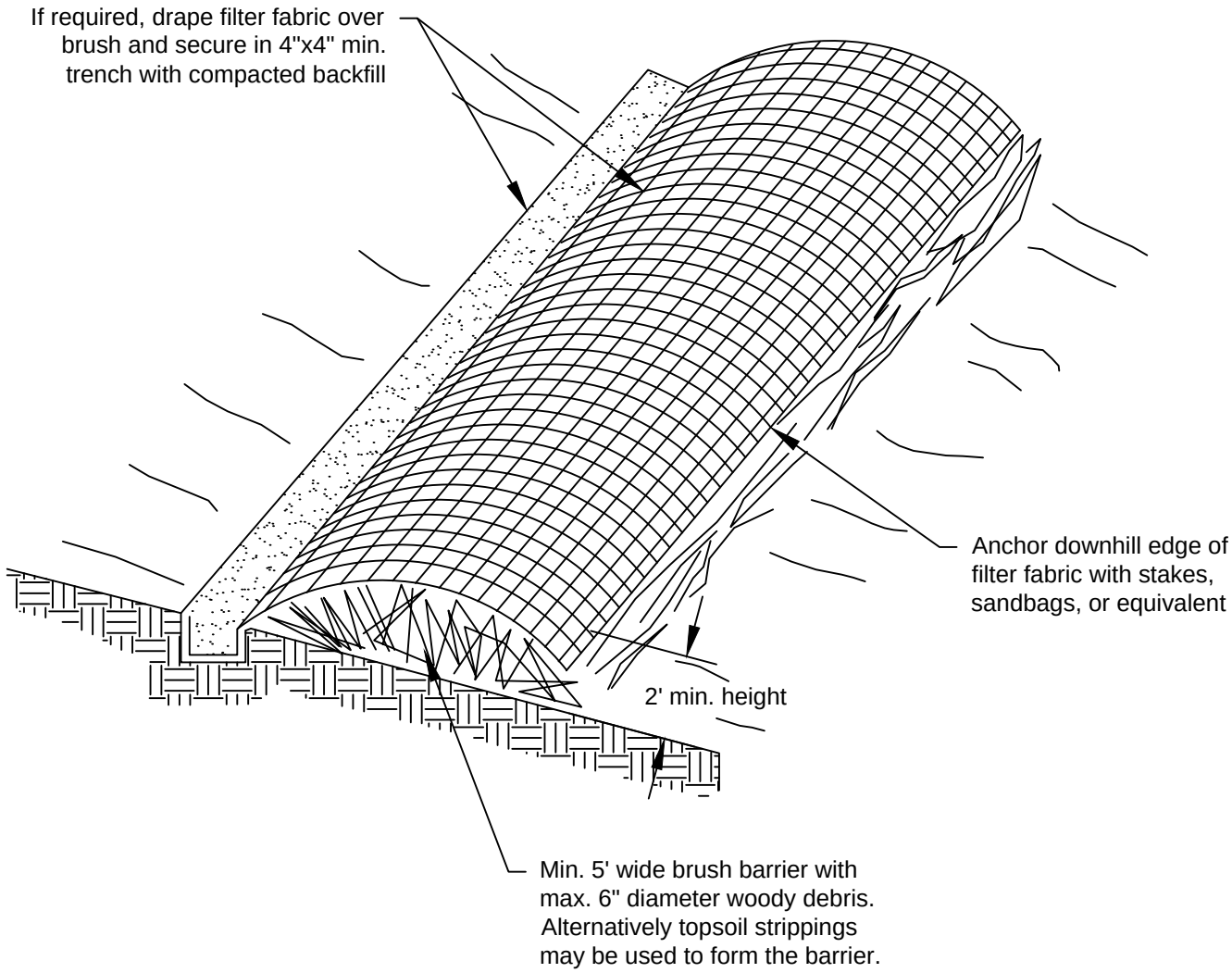

NOT TO SCALE

DEPARTMENT OF
ECOLOGY
State of Washington

Figure II-4.2.11
Brush Barrier

Revised September 2015

Please see *http://www.ecy.wa.gov/copyright.html* for copyright notice including permissions, limitation of liability, and disclaimer.

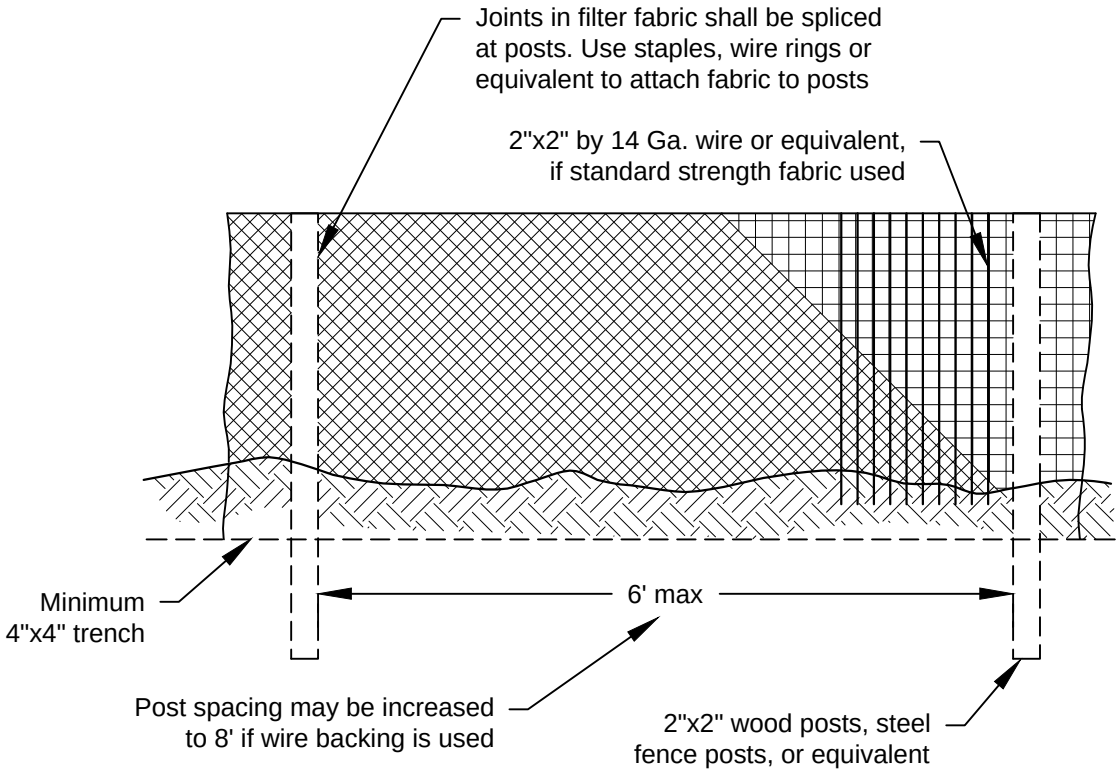

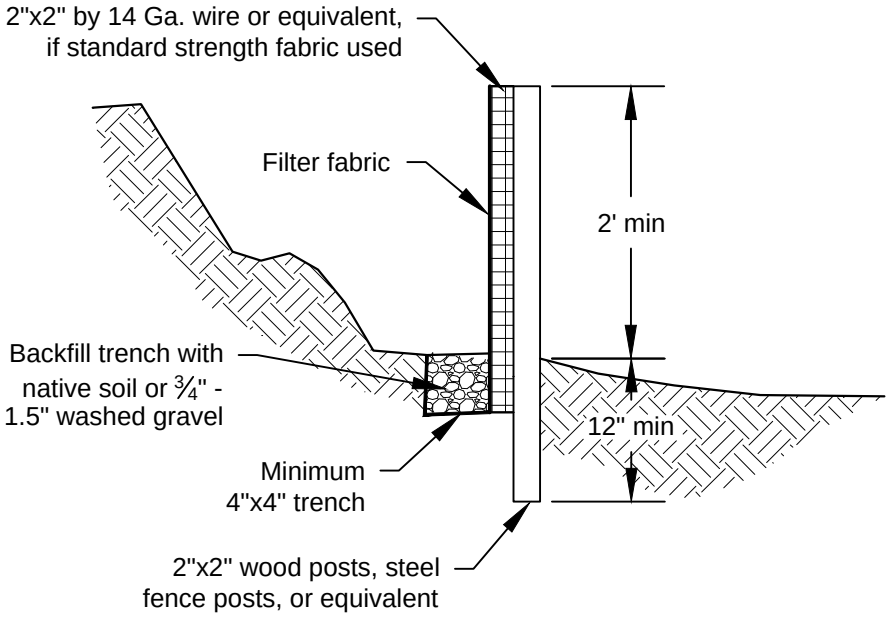

NOT TO SCALE

DEPARTMENT OF ECOLOGY
State of Washington

Figure II-4.2.12
Silt Fence

Revised October 2014

Please see *http://www.ecy.wa.gov/copyright.html* for copyright notice including permissions, limitation of liability, and disclaimer.

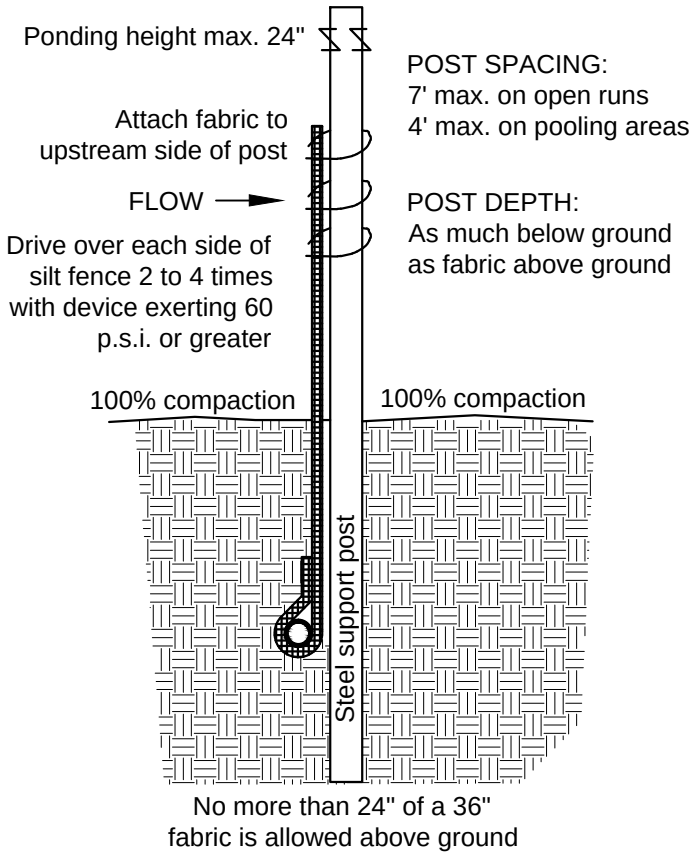

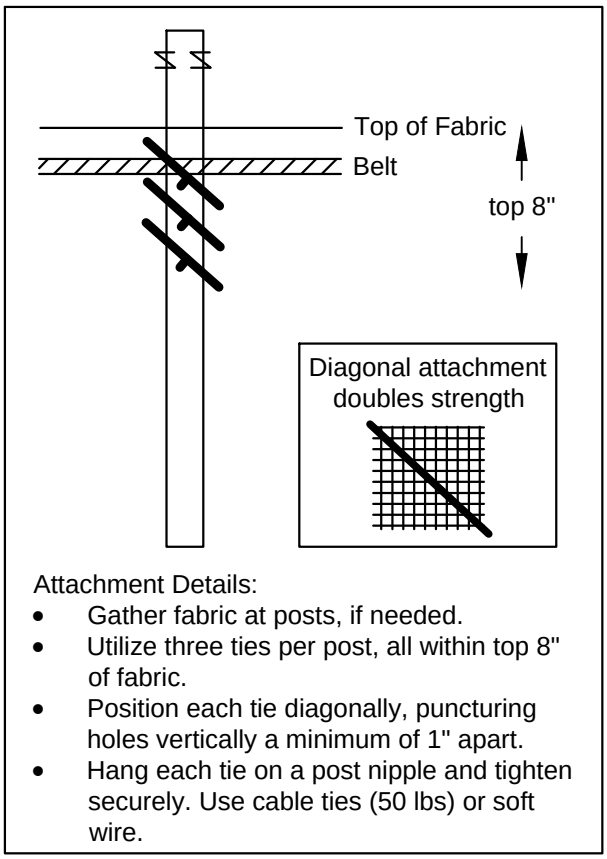

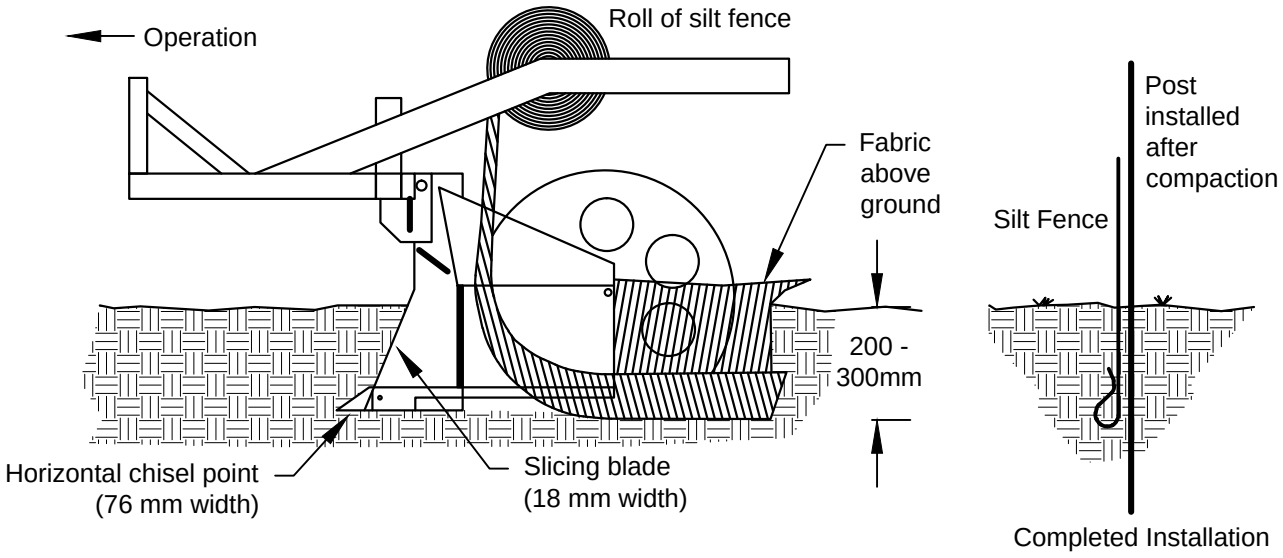

Vibratory plow is not acceptable because of horizontal compaction

NOT TO SCALE

DEPARTMENT OF ECOLOGY
State of Washington

Figure II-4.2.13
Silt Fence Installation by Slicing Method

Revised November 2015

Please see *http://www.ecy.wa.gov/copyright.html* for copyright notice including permissions, limitation of liability, and disclaimer.

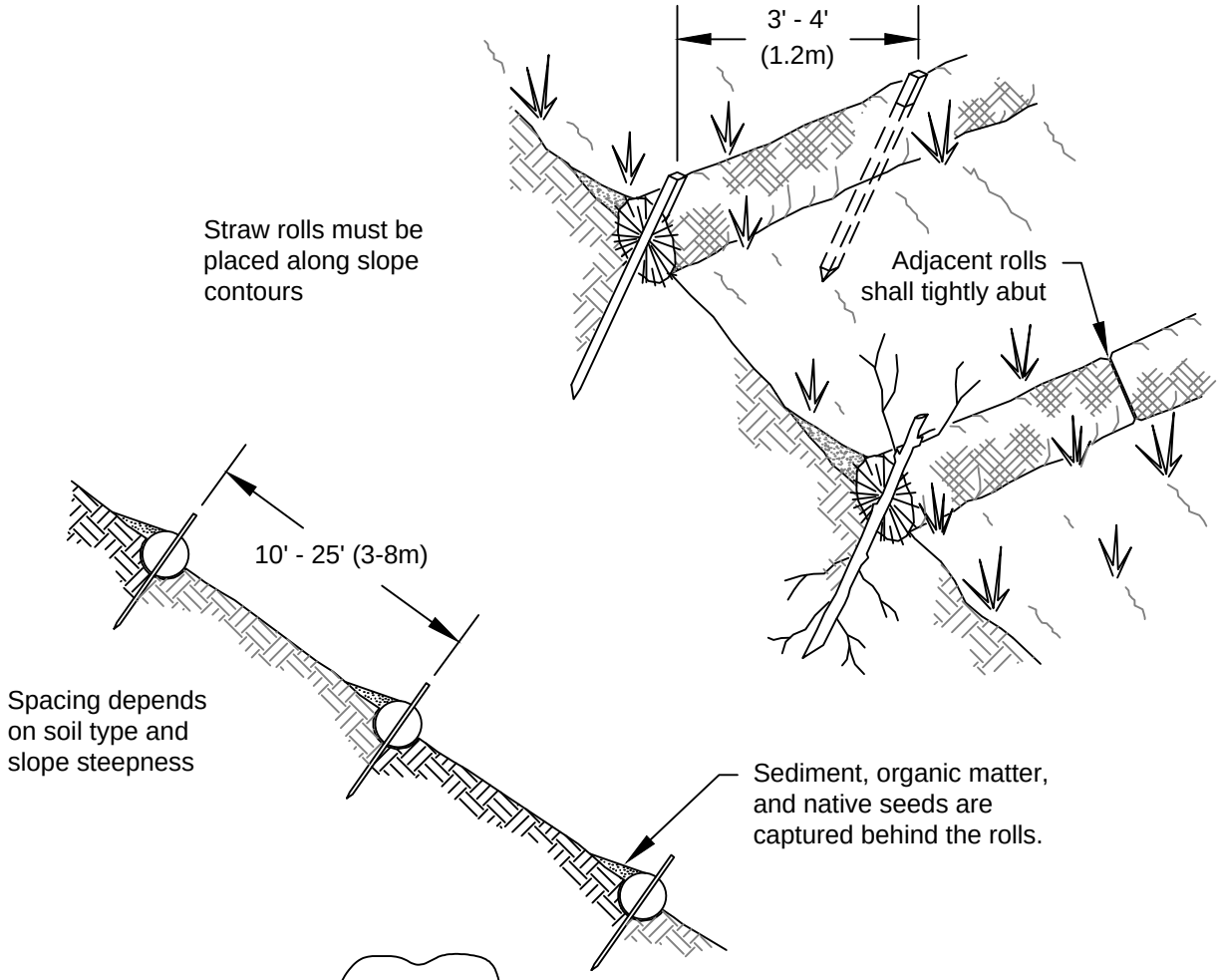

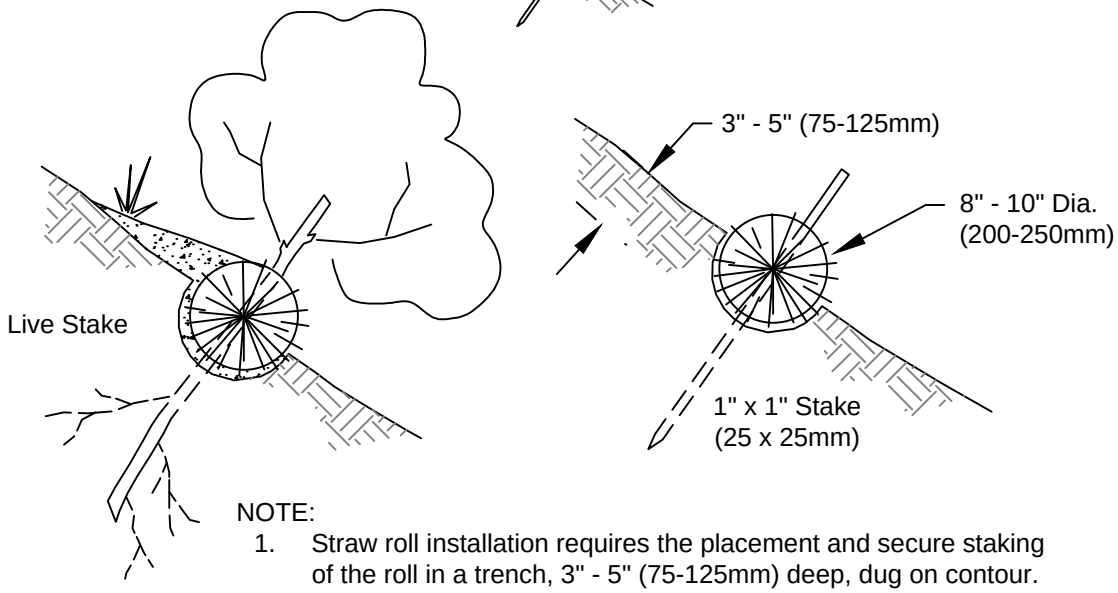

NOTE:

1. Straw roll installation requires the placement and secure staking of the roll in a trench, 3" - 5" (75-125mm) deep, dug on contour. Runoff must not be allowed to run under or around roll.

NOT TO SCALE

DEPARTMENT OF
ECOLOGY
State of Washington

Figure II-4.2.14
Wattles

Revised November 2015

Please see *http://www.ecy.wa.gov/copyright.html* for copyright notice including permissions, limitation of liability, and disclaimer.

NOT TO SCALE

DEPARTMENT OF
ECOLOGY
State of Washington

Figure II-4.2.15
Manifold and Branches in a Wooded, Vegetated Spray Field

Revised November 2015

Please see *http://www.ecy.wa.gov/copyright.html* for copyright notice including permissions, limitation of liability, and disclaimer.

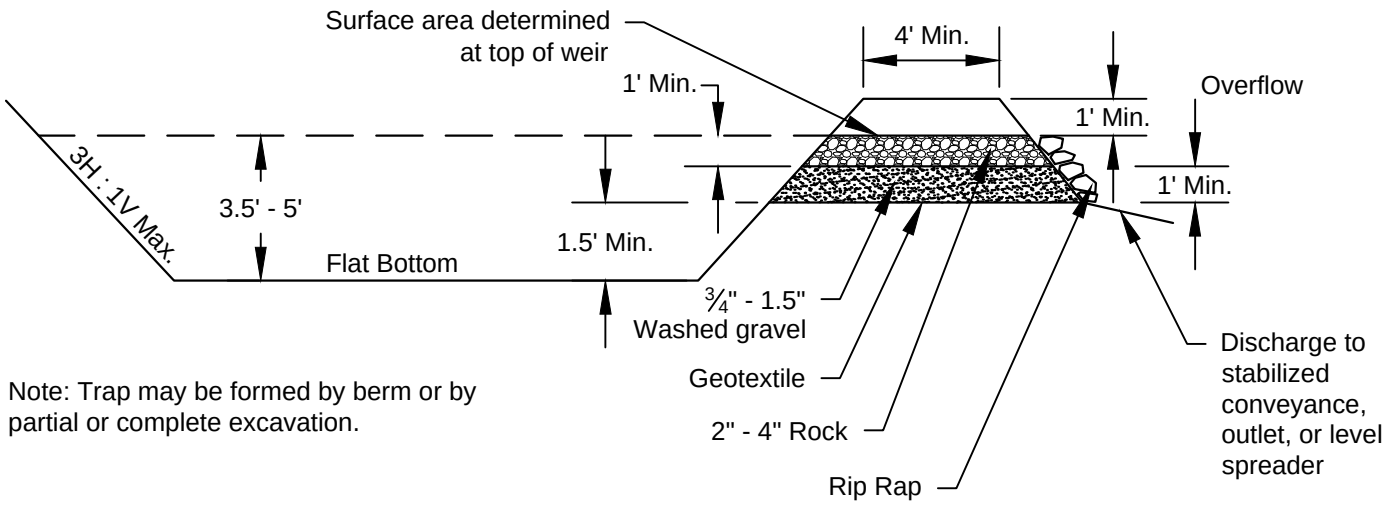

Note: Trap may be formed by berm or by partial or complete excavation.

NOT TO SCALE

DEPARTMENT OF
ECOLOGY
State of Washington

Figure II-4.2.16
Cross Section of Sediment Trap

Revised November 2015

Please see *http://www.ecy.wa.gov/copyright.html* for copyright notice including permissions, limitation of liability, and disclaimer.

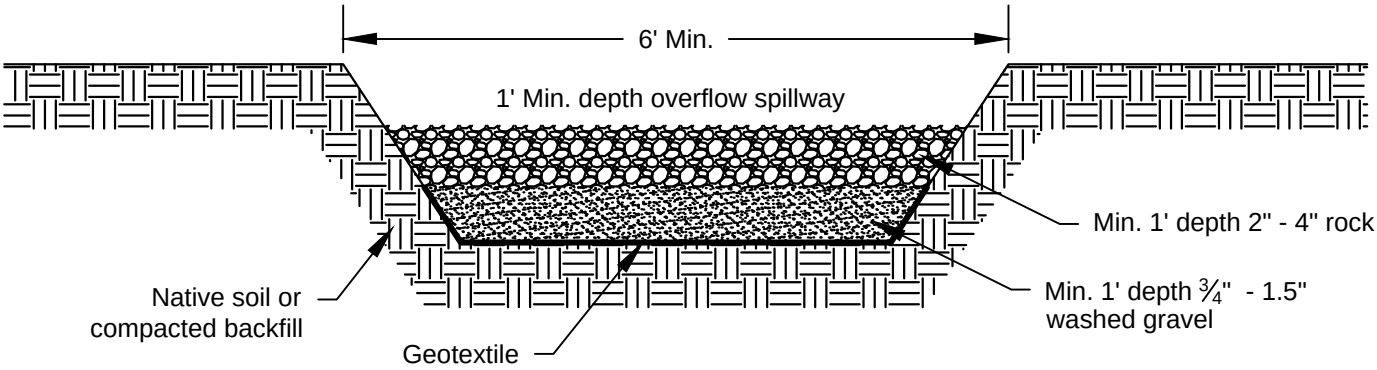

NOT TO SCALE

DEPARTMENT OF
ECOLOGY
State of Washington

Figure II-4.2.17
Sediment Trap Outlet

Revised November 2015

Please see *http://www.ecy.wa.gov/copyright.html* for copyright notice including permissions, limitation of liability, and disclaimer.

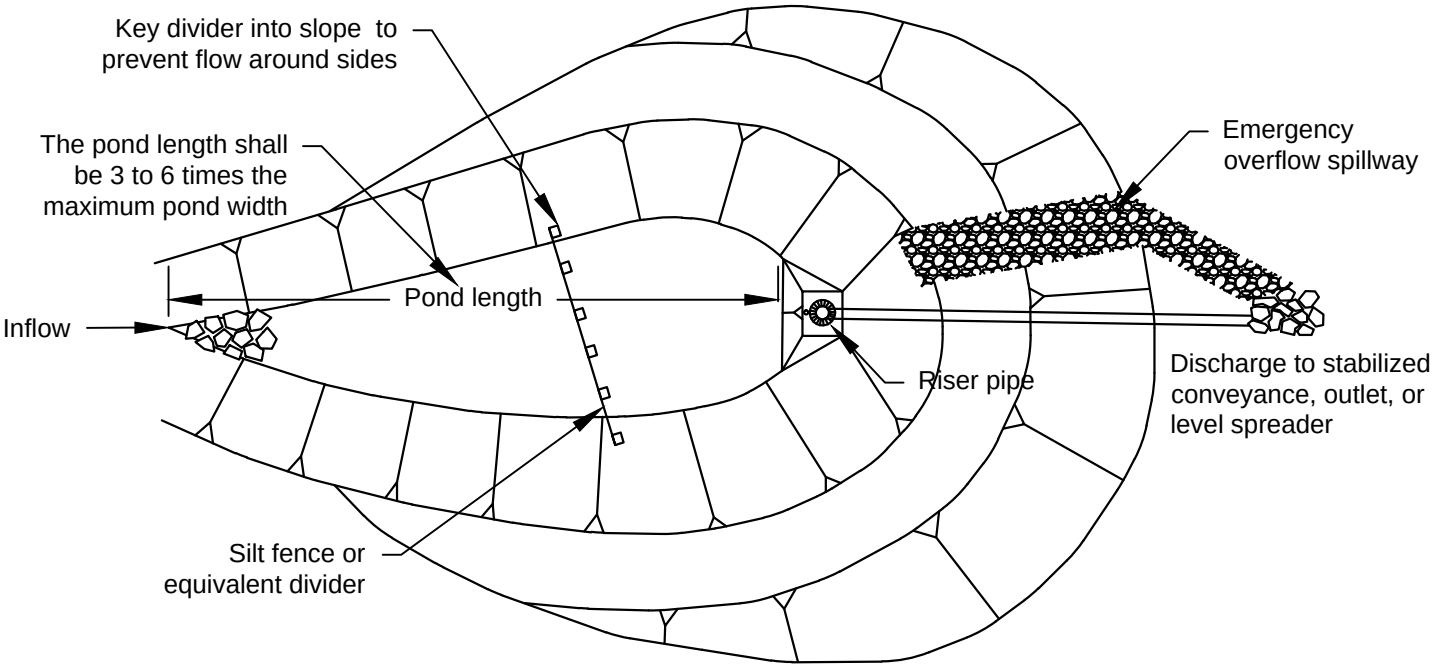

Note: Pond may be formed by berm or by partial or complete excavation

NOT TO SCALE

DEPARTMENT OF ECOLOGY State of Washington

Figure II-4.2.18
Sediment Pond Plan View

Revised November 2015

Please see *http://www.ecy.wa.gov/copyright.html* for copyright notice including permissions, limitation of liability, and disclaimer.

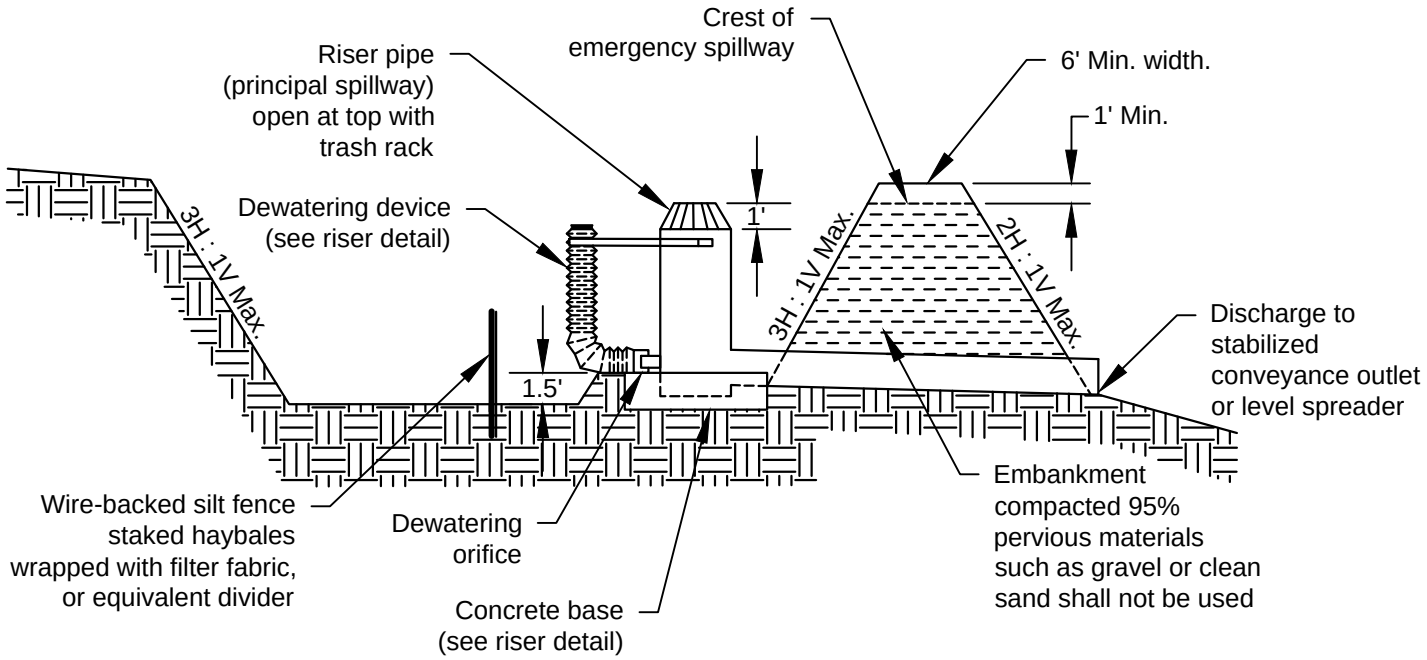

NOT TO SCALE

DEPARTMENT OF
ECOLOGY
State of Washington

Figure II-4.2.19
Sediment Pond Cross Section

Revised November 2015

Please see *http://www.ecy.wa.gov/copyright.html* for copyright notice including permissions, limitation of liability, and disclaimer.

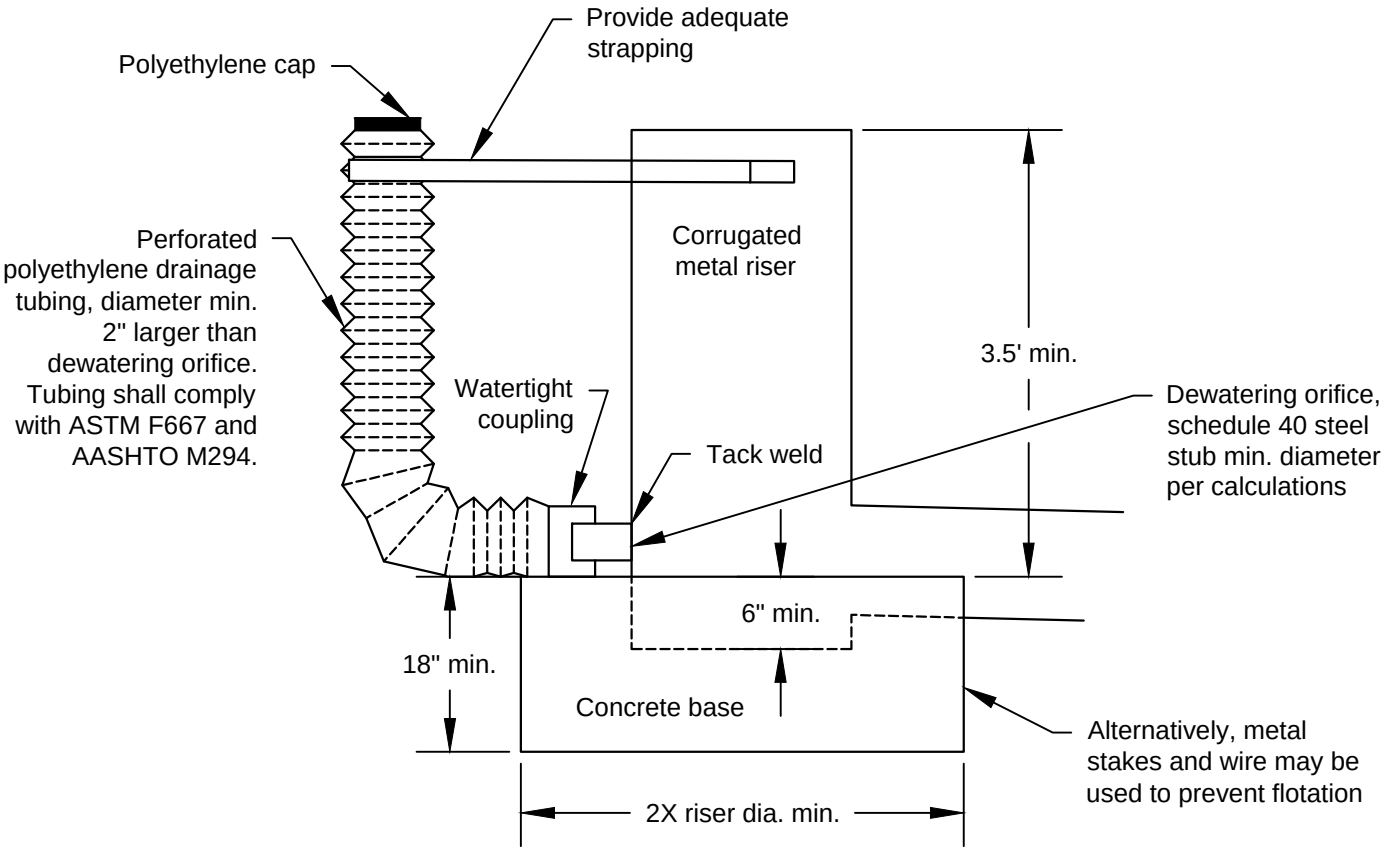

NOT TO SCALE

DEPARTMENT OF ECOLOGY
State of Washington

Figure II-4.2.20
Sediment Pond Riser Detail

Revised November 2015

Please see *http://www.ecy.wa.gov/copyright.html* for copyright notice including permissions, limitation of liability, and disclaimer.

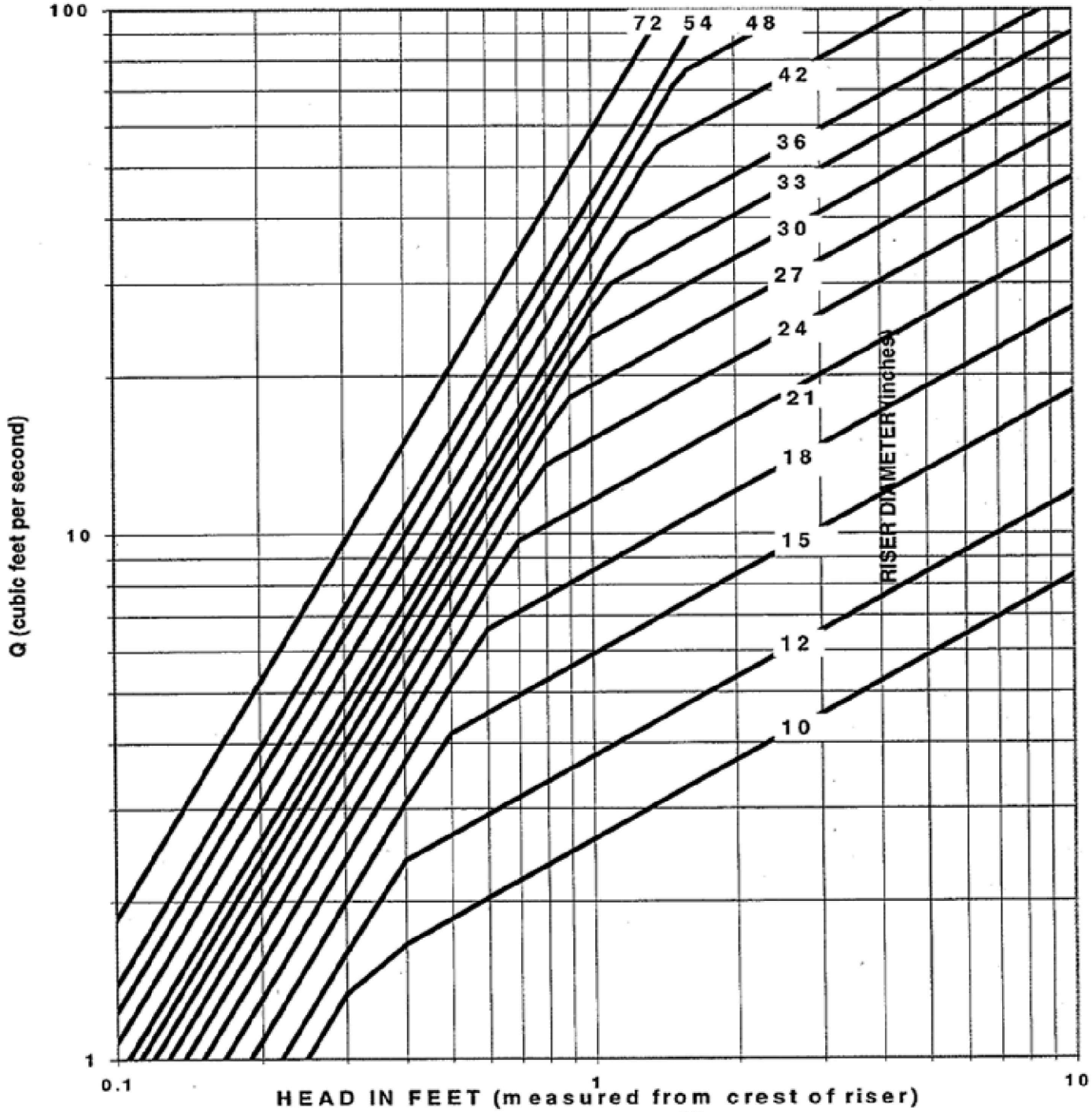

$Q_{weir} = 9.739\ DH^{3/2}$

$Q_{orifice} = 3.782\ D^2H^{1/2}$

Q in cfs, D and H in feet

Slope change occurs at weir-orifice transition

DEPARTMENT OF ECOLOGY State of Washington

Figure II-4.2.21
Riser Inflow Curves

Revised November 2015

Please see *http://www.ecy.wa.gov/copyright.html* for copyright notice including permissions, limitation of liability, and disclaimer.

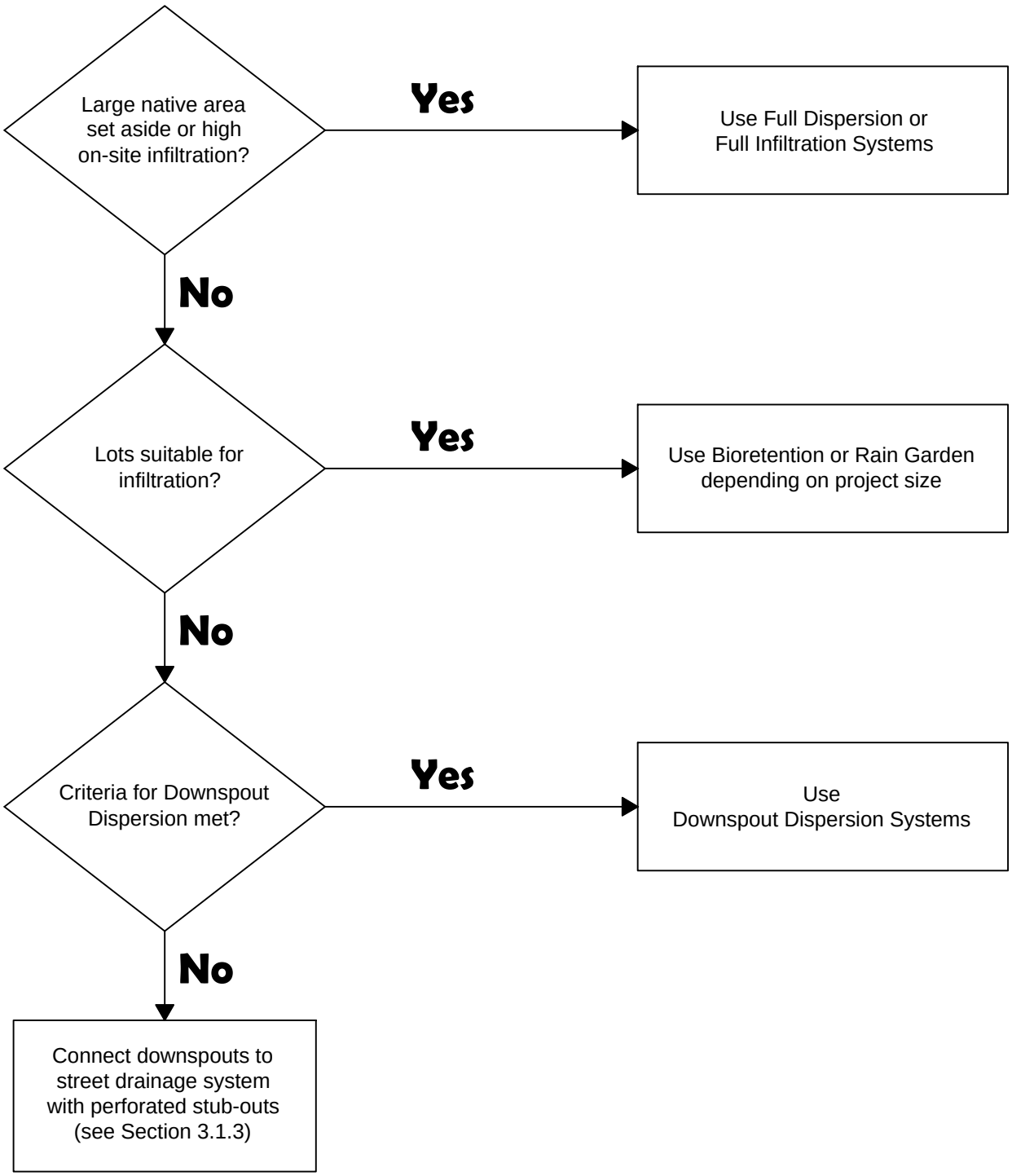

DEPARTMENT OF ECOLOGY
State of Washington

Figure III-3.1.1
Flow Diagram Showing Selection of Roof Downspout Controls

Revised November 2015

Please see *http://www.ecy.wa.gov/copyright.html* for copyright notice including permissions, limitation of liability, and disclaimer.

Plan View

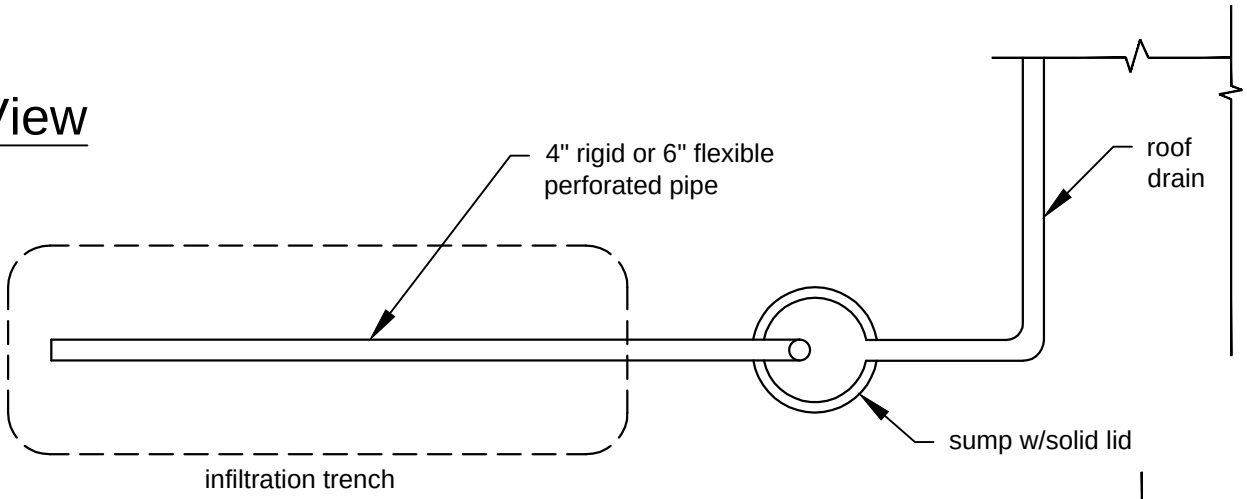

Profile View

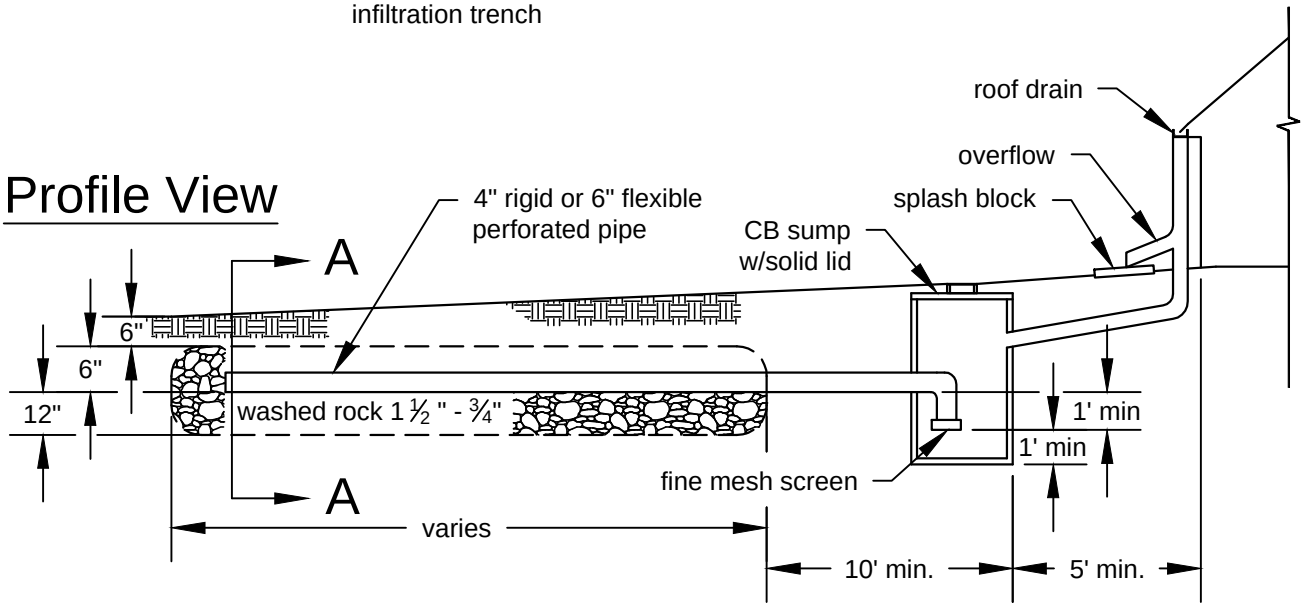

Section A-A

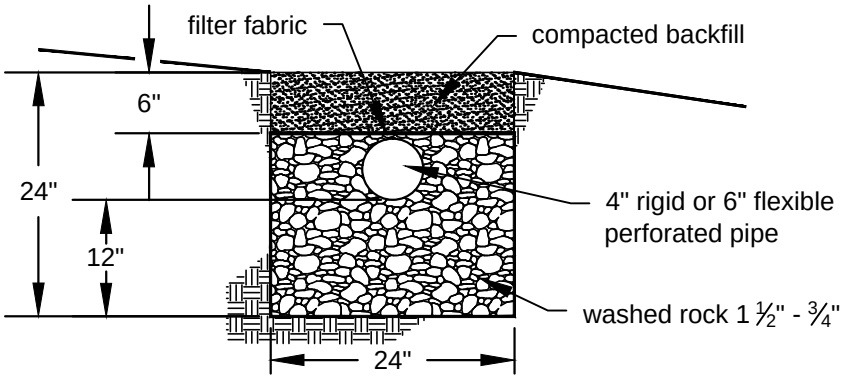

NOT TO SCALE

DEPARTMENT OF
ECOLOGY
State of Washington

Figure III-3.1.2
Typical Downspout Infiltration Trench

Revised November 2015

Please see *http://www.ecy.wa.gov/copyright.html* for copyright notice including permissions, limitation of liability, and disclaimer.

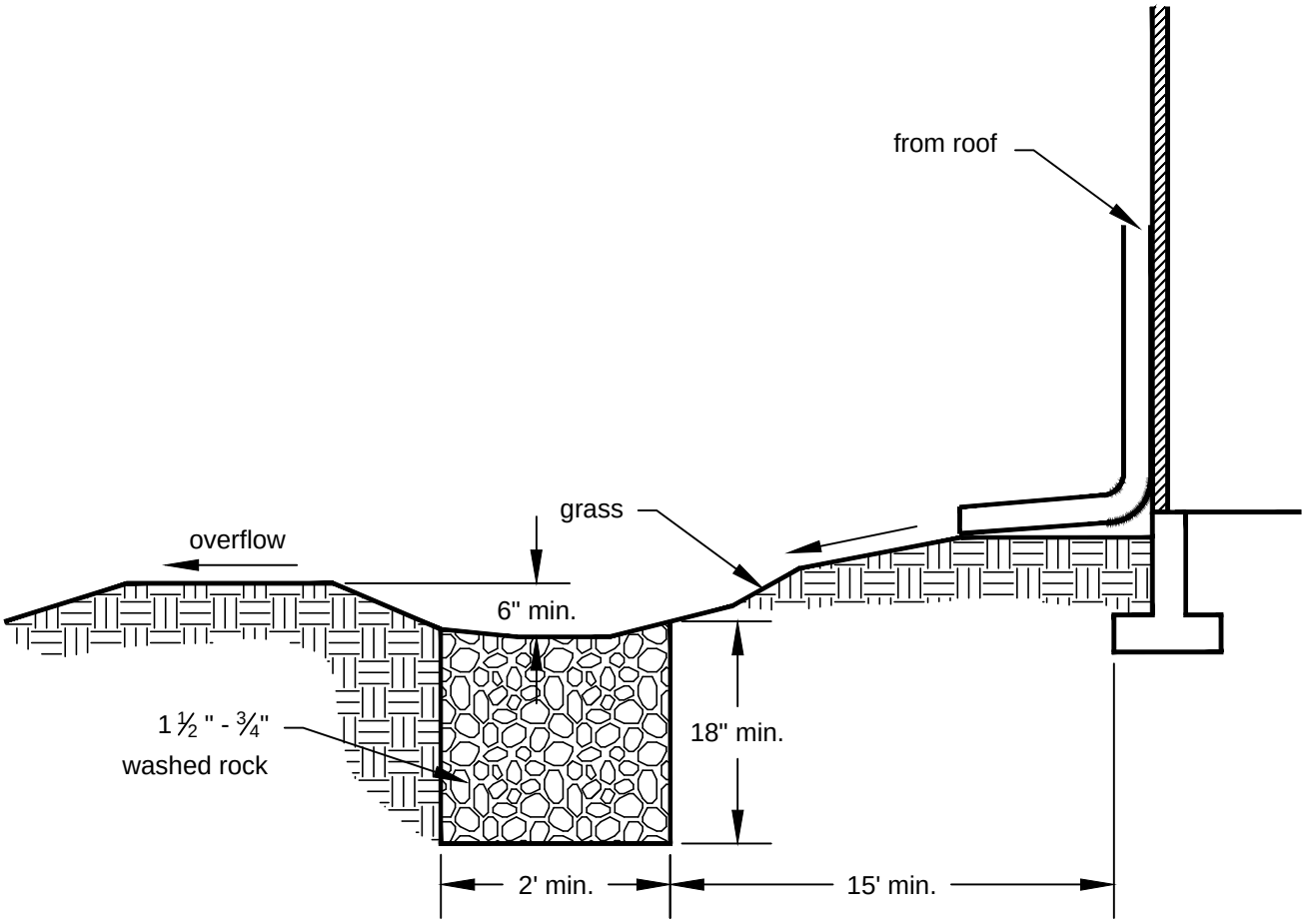

Note: Same length dimensions and site limitations as typical system

NOT TO SCALE

DEPARTMENT OF
ECOLOGY
State of Washington

Figure III-3.1.3
Alternative Downspout Infiltration Trench System for Coarse Sand and Gravel

Revised November 2015

Please see *http://www.ecy.wa.gov/copyright.html* for copyright notice including permissions, limitation of liability, and disclaimer.

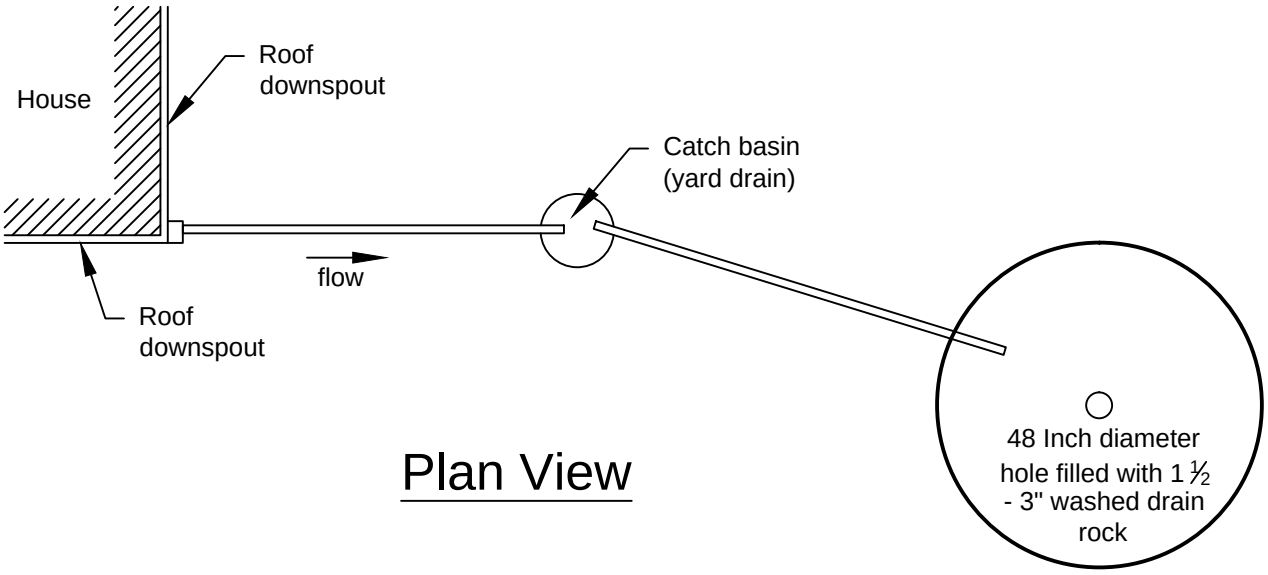

Plan View

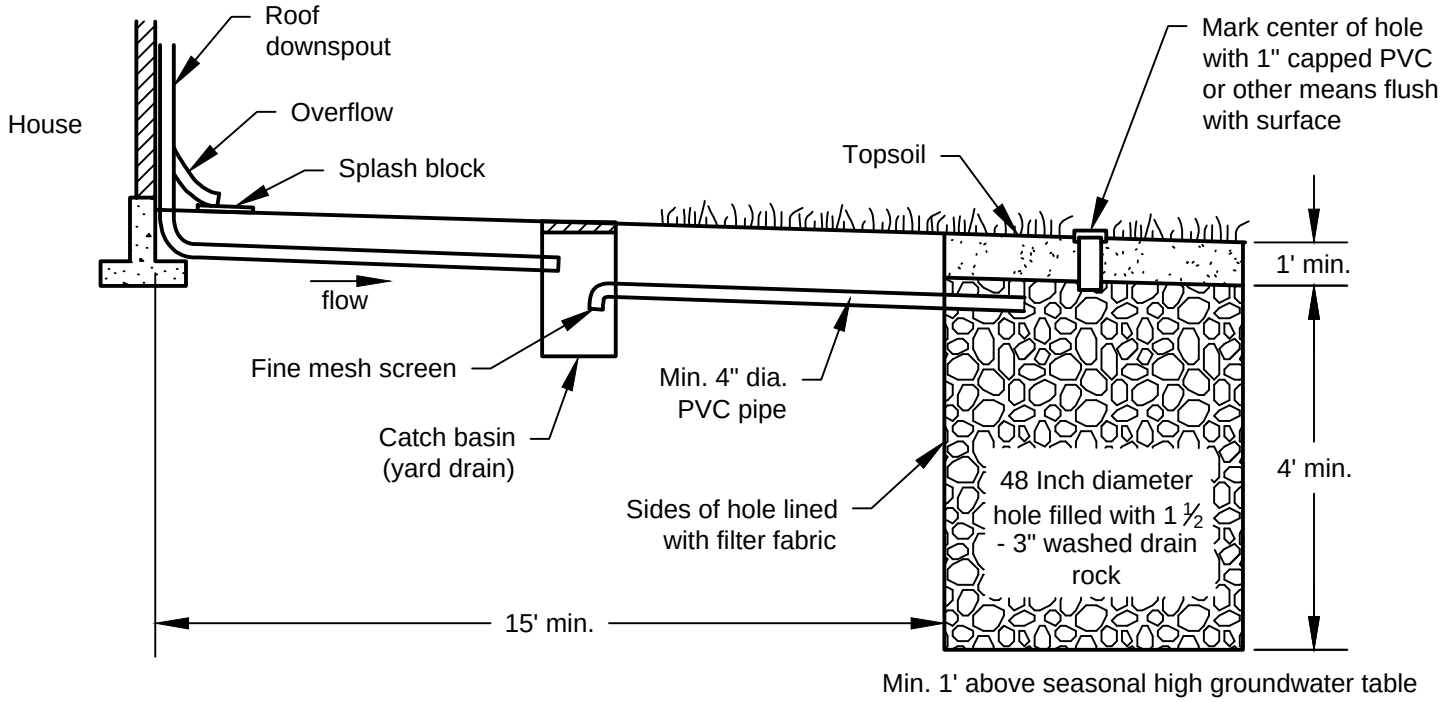

Section View

NOT TO SCALE

DEPARTMENT OF ECOLOGY
State of Washington

Figure III-3.1.4
Typical Downspout Infiltration Drywell

Revised November 2015

Please see *http://www.ecy.wa.gov/copyright.html* for copyright notice including permissions, limitation of liability, and disclaimer.

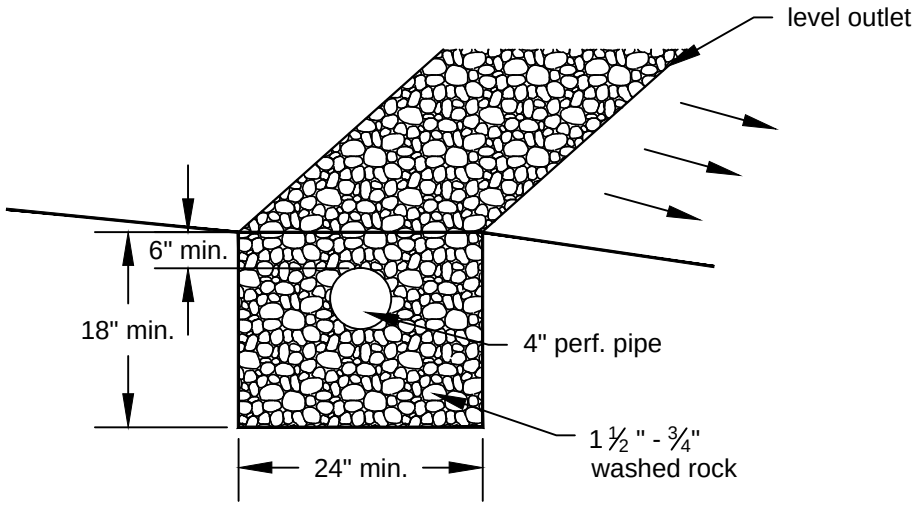

Trench X-Section

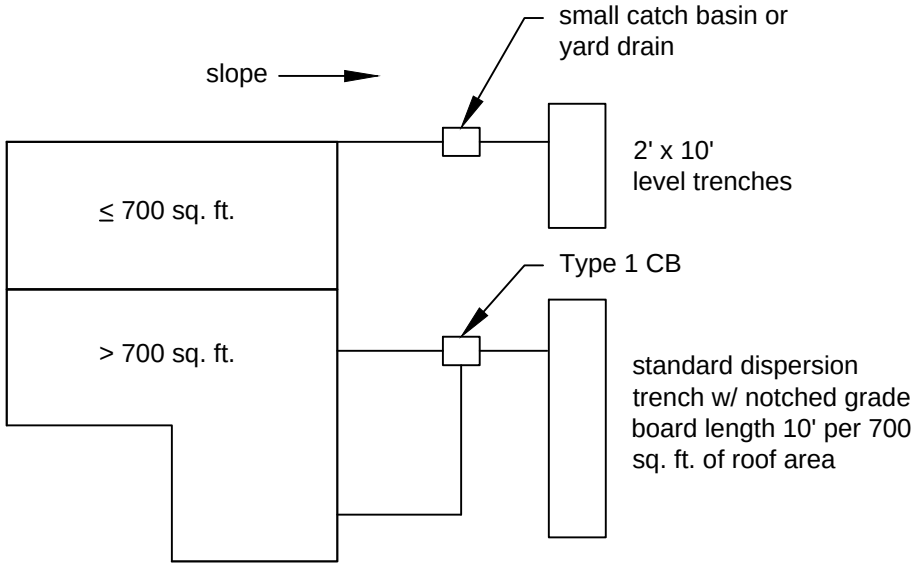

Plan View of Roof

NOT TO SCALE

DEPARTMENT OF
ECOLOGY
State of Washington

Figure III-3.1.5
Typical Downspout Dispersion Trench

Revised November 2015

Please see *http://www.ecy.wa.gov/copyright.html* for copyright notice including permissions, limitation of liability, and disclaimer.

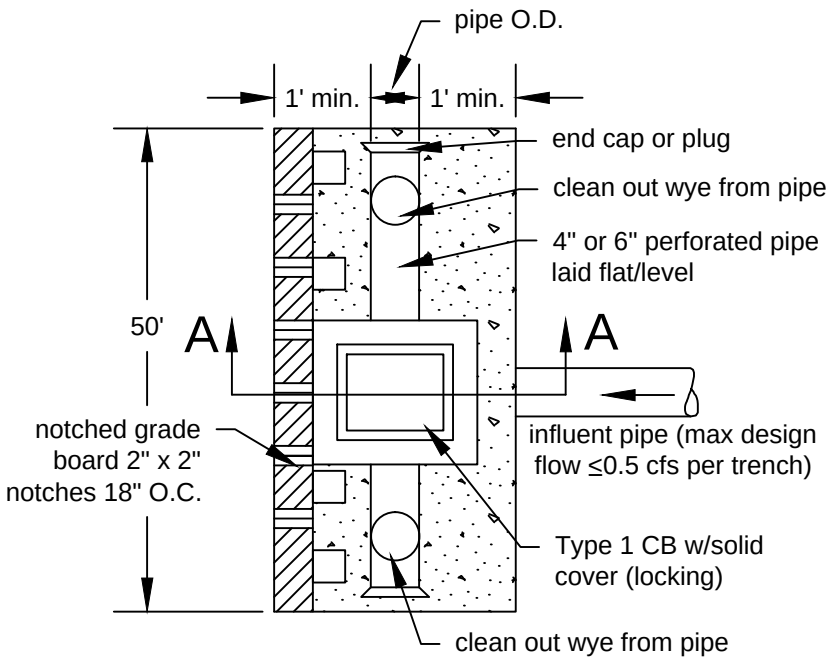

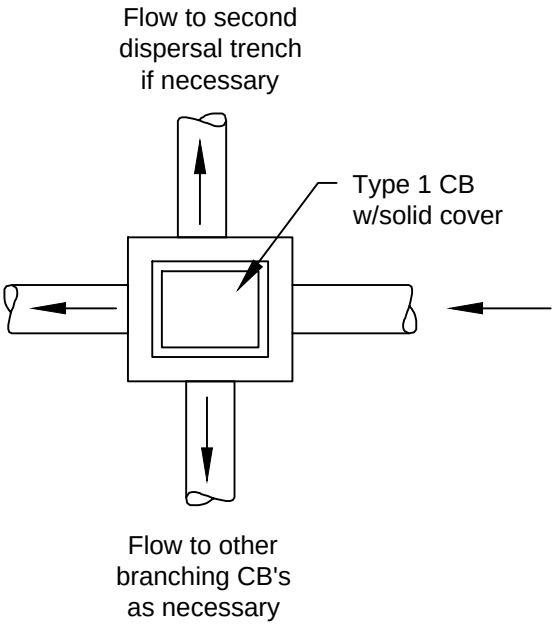

Plan

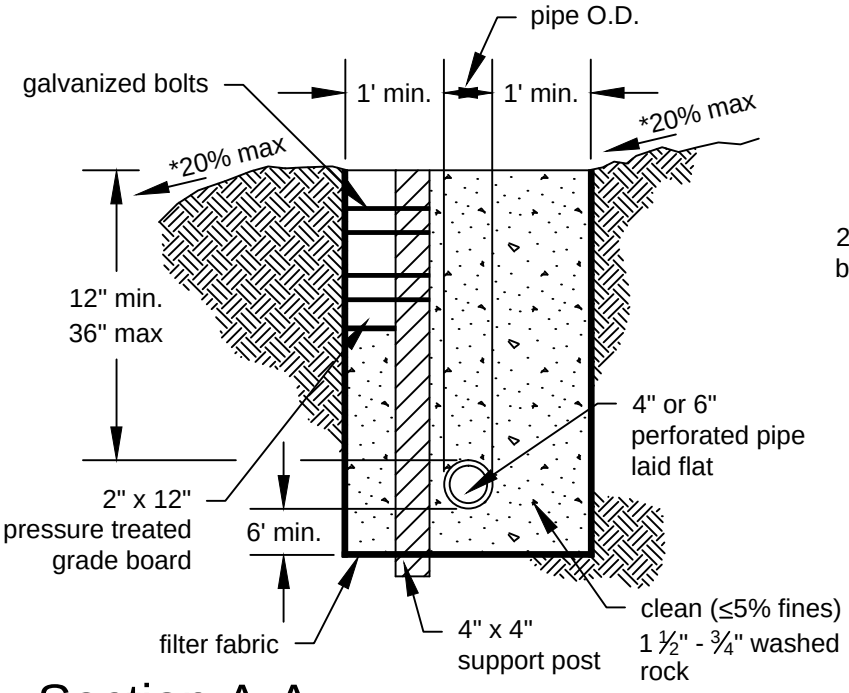

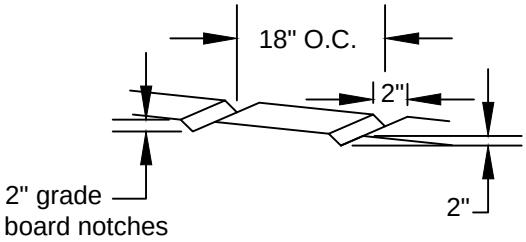

Section A-A

*15% max for flow control/water quality treatment in rural areas.

Notes:

1. This trench shall be constructed so as to prevent point discharge and/or erosion.
2. Trenches may be placed no closer than 50 feet to one another. (100 feet along flowline)
3. Trench and grade board must be level. Align to follow contours of site.
4. Support post spacing as required by soil conditions to ensure grade board remains level.

NOT TO SCALE

DEPARTMENT OF ECOLOGY State of Washington

Figure III-3.1.6
Standard Dispersion Trench with Notched Grade Board

Revised November 2015

Please see *http://www.ecy.wa.gov/copyright.html* for copyright notice including permissions, limitation of liability, and disclaimer.

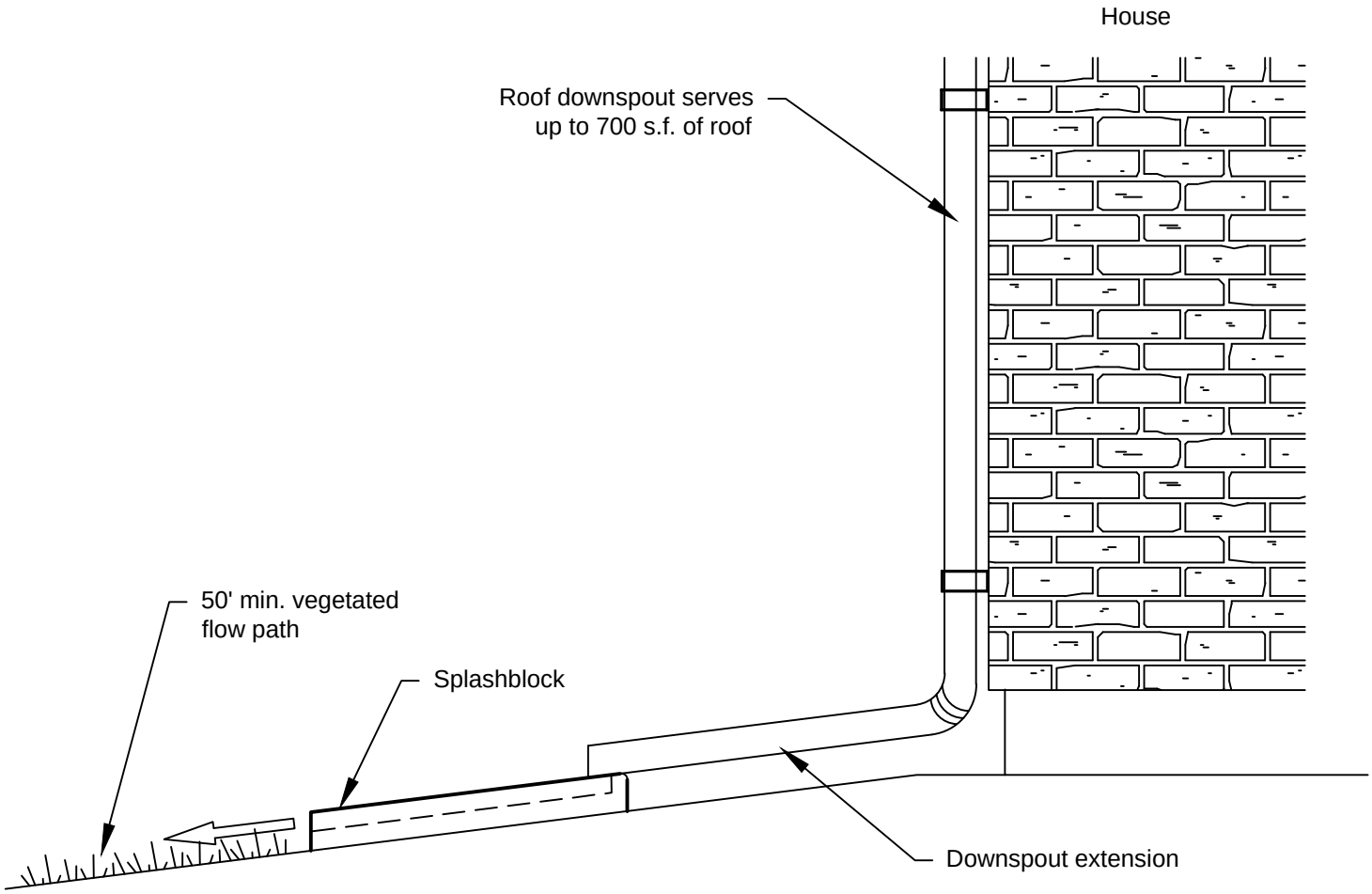

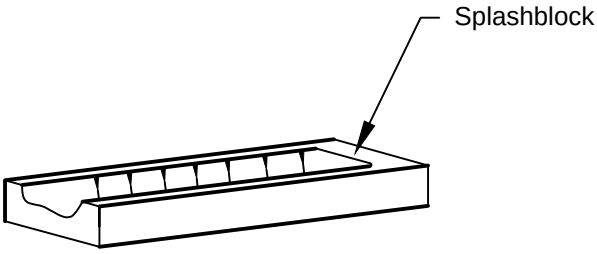

NOT TO SCALE

DEPARTMENT OF
ECOLOGY
State of Washington

Figure III-3.1.7
Typical Downspout Splashblock Dispersion

Revised December 2015

Please see *http://www.ecy.wa.gov/copyright.html* for copyright notice including permissions, limitation of liability, and disclaimer.

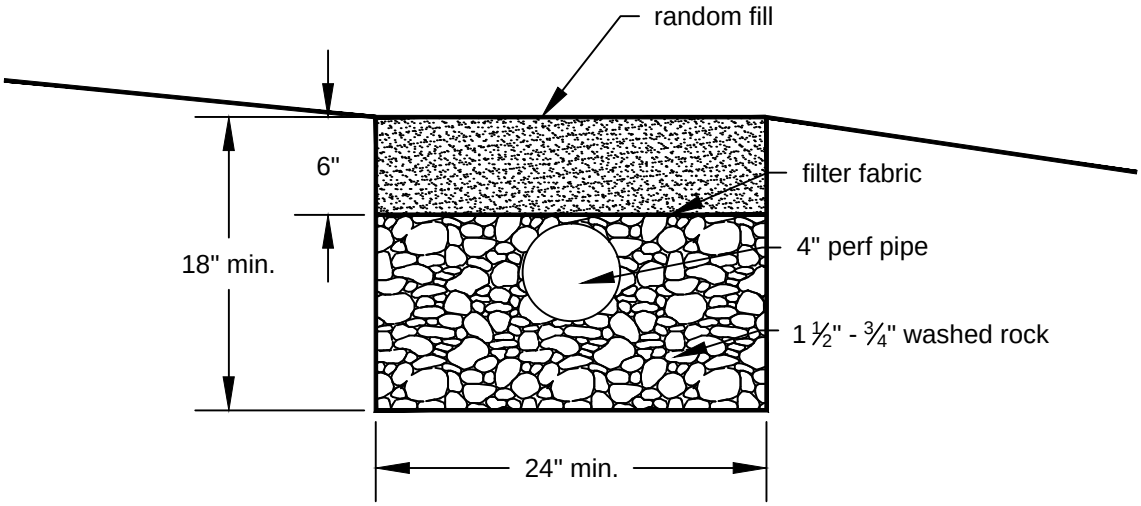

Trench X-Section

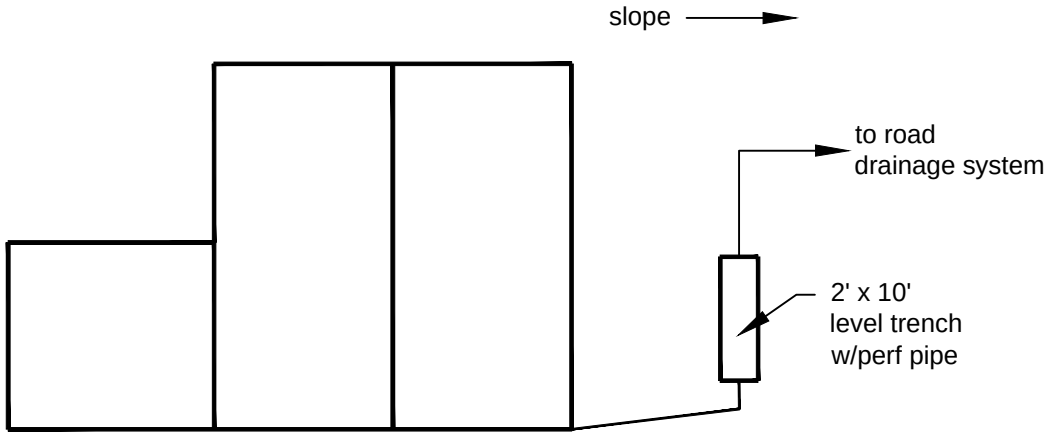

Plan View of Roof

NOT TO SCALE

DEPARTMENT OF
ECOLOGY
State of Washington

Figure III-3.1.8
Perforated Stub-Out Connection

Revised December 2015

Please see *http://www.ecy.wa.gov/copyright.html* for copyright notice including permissions, limitation of liability, and disclaimer.

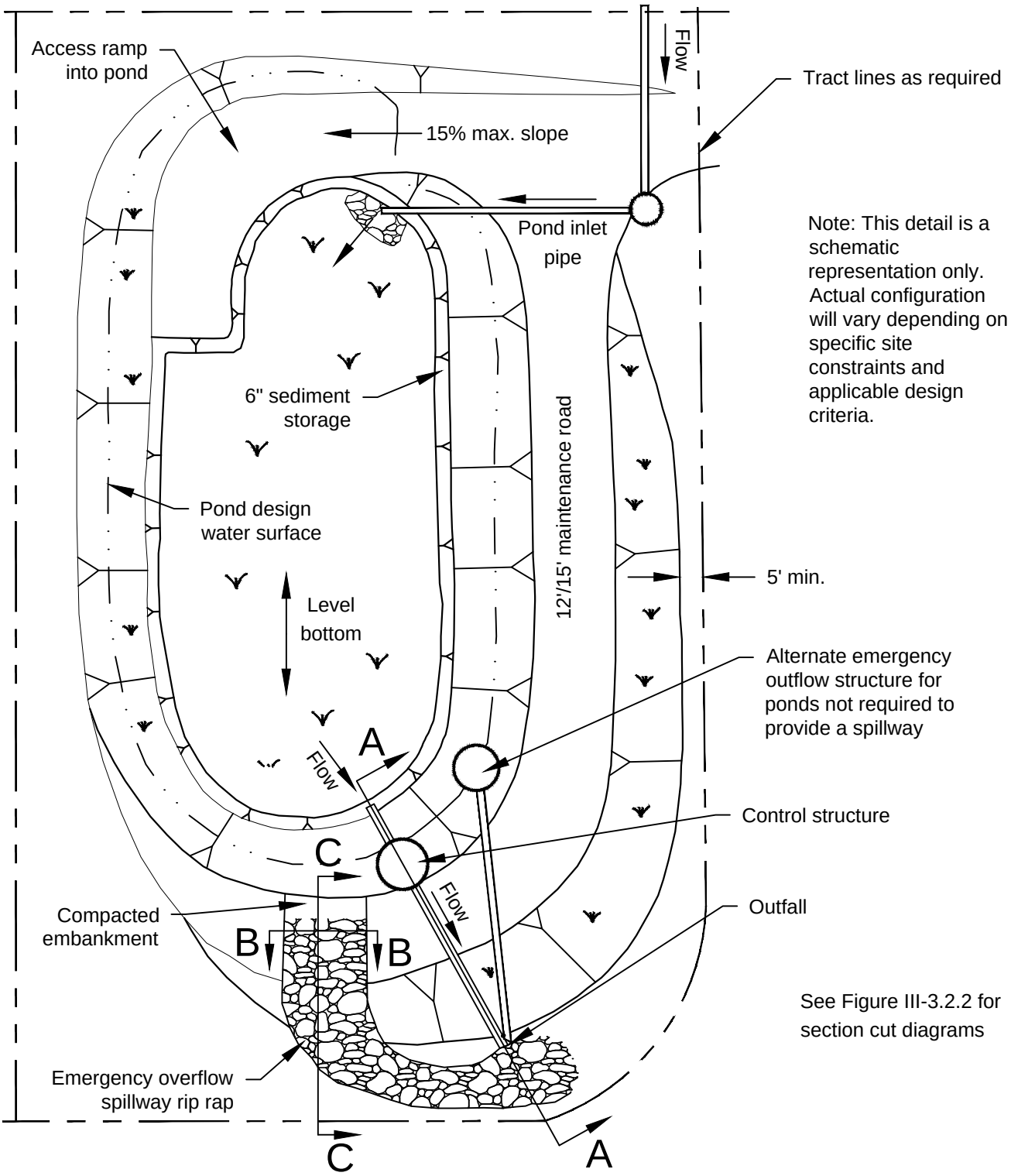

NOT TO SCALE

DEPARTMENT OF ECOLOGY
State of Washington

Figure III-3.2.1
Typical Detention Pond

Revised December 2015

Please see *http://www.ecy.wa.gov/copyright.html* for copyright notice including permissions, limitation of liability, and disclaimer.

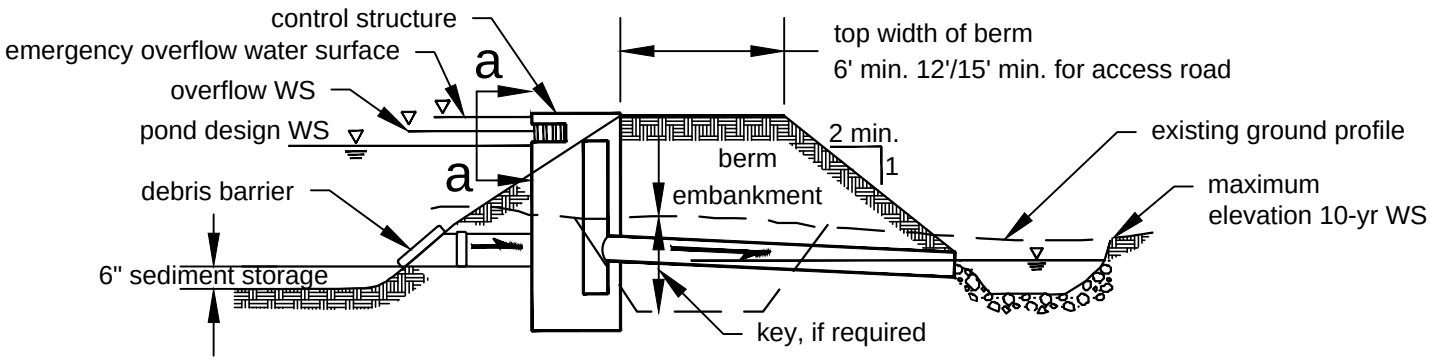

Section A-A

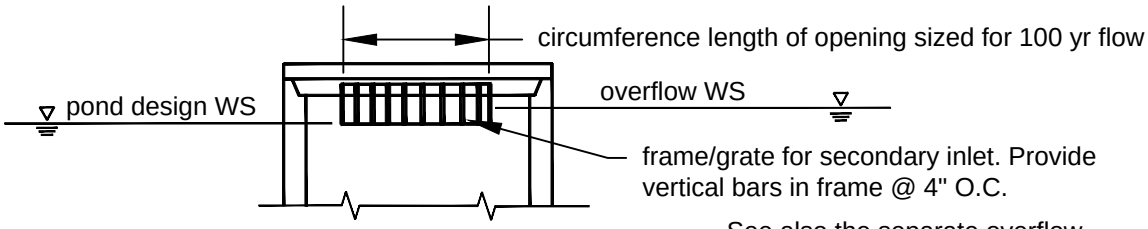

Section a-a

See also the separate overflow structure shown in Figure III-3.2.3

Section B-B has 2 options

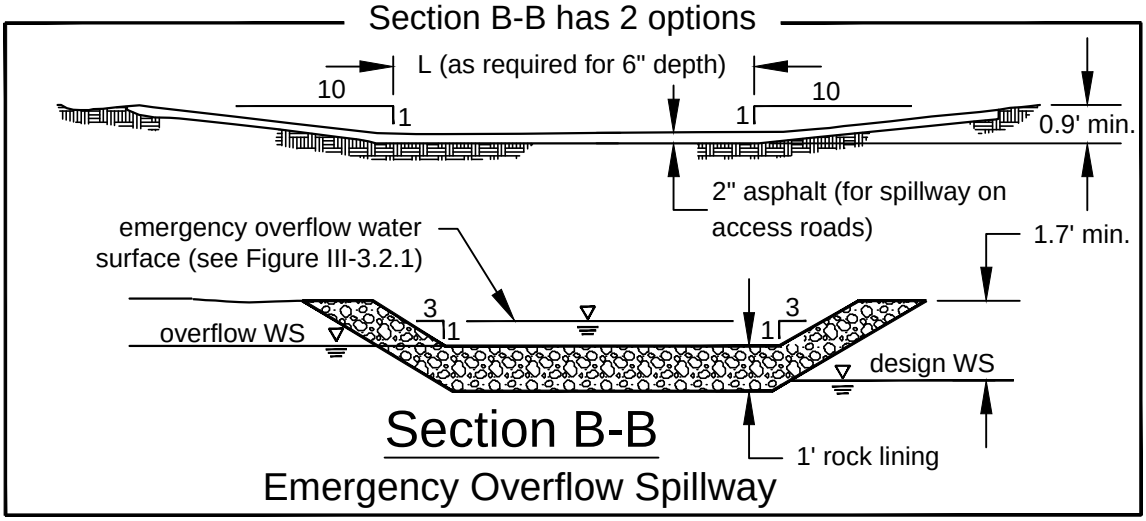

Section B-B

Emergency Overflow Spillway

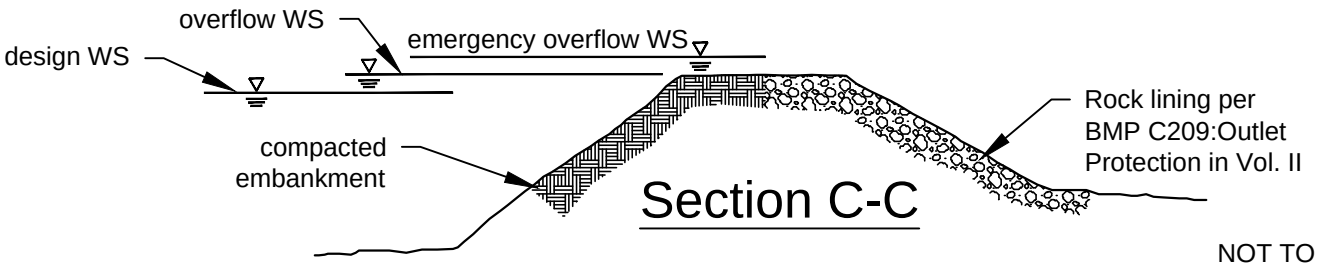

Section C-C

NOT TO SCALE

DEPARTMENT OF
ECOLOGY
State of Washington

Figure III-3.2.2
Typical Detention Pond Sections

Revised December 2015

Please see *http://www.ecy.wa.gov/copyright.html* for copyright notice including permissions, limitation of liability, and disclaimer.

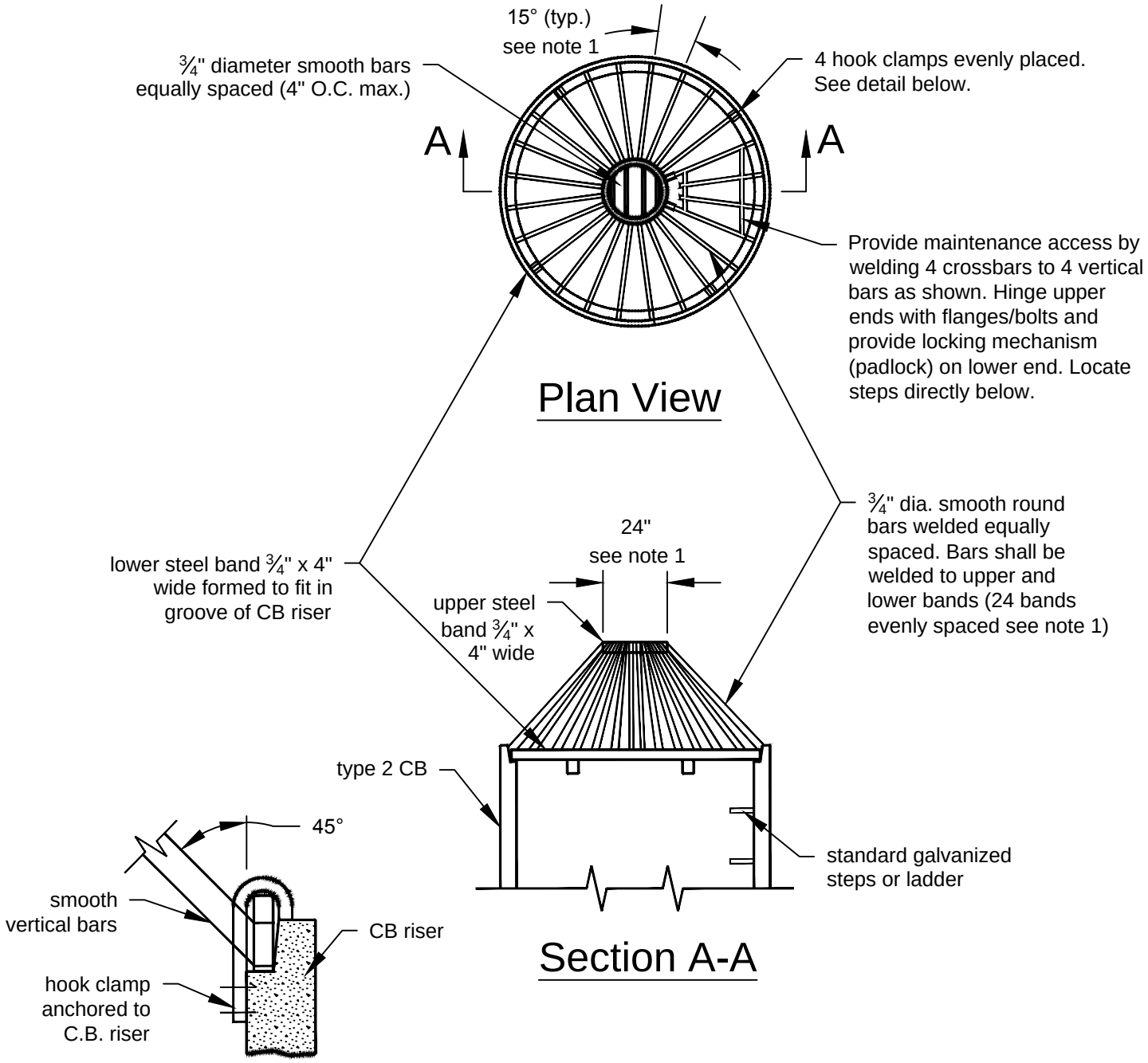

Notes:

1. Dimensions are for illustration on 54" diameter CB. For different diameter CB's adjust to maintain 45 degree angle on "vertical" bars and 7" O.C. maximum spacing of bars around lower steel band.
2. Metal parts must be corrosion resistant; steel bars must be galvanized.
3. This debris barrier is also recommended for use on the inlet to roadway cross-culverts with high potential for debris collection (except on type 2 streams).

NOT TO SCALE

DEPARTMENT OF ECOLOGY
State of Washington

Figure III-3.2.3
Overflow Structure

Revised December 2015

Please see *http://www.ecy.wa.gov/copyright.html* for copyright notice including permissions, limitation of liability, and disclaimer.

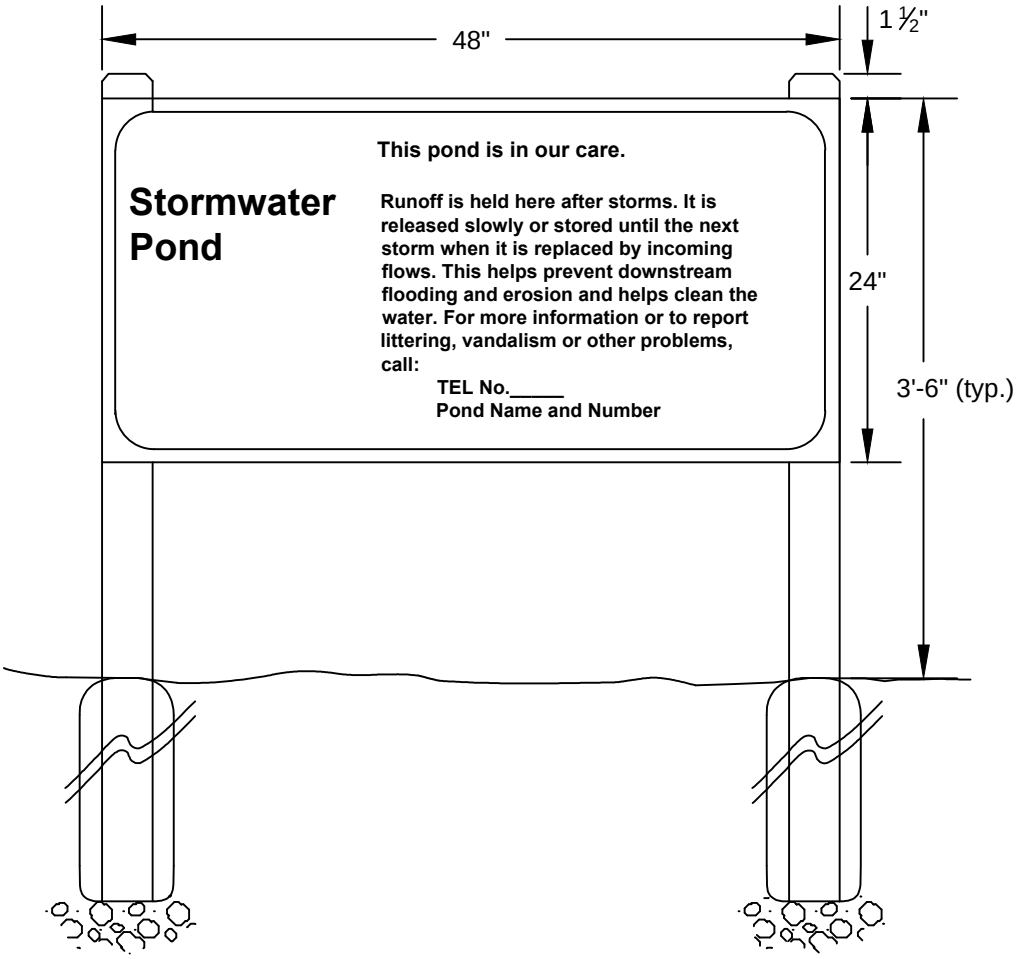

Sample Specifications:

Size:	48 inches by 24 inches
Material:	0.125-gauge aluminum
Face:	Non-reflective vinyl or 3 coats outdoor enamel (sprayed).
Lettering:	Silk screen enamel where possible, or vinyl letters.
Colors:	Beige background, teal letters.
Type face:	Helvetica condensed. Title: 3 inch; Sub-Title: 1 ½ inch; Text: 1 inch; Outer Border:; ⅛ inch; Border Distance from Edge: ¼ inch; all text 1 ¾ inch from border.
Posts:	Pressure treated, beveled tops, 1 ½ inch higher than sign.
Installation:	Secure to chain link fence if available. Otherwise install on two 4" x 4" posts, pressure treated, mounted atop gravel bed, installed in 30-inch concrete filled post holes (8-inch minimum diameter). Top of sign no higher than 42 inches from ground surface.
Placement:	Face sign in direction of primary visual or physical access. Do not block any access road. Do not place within 6 feet of structural facilities (e.g. manholes, spillways, pipe inlets).
Special Notes:	This facility is lined to protect groundwater (if a liner that restricts infiltration of stormwater exists).

NOT TO SCALE

DEPARTMENT OF
ECOLOGY
State of Washington

Figure III-3.2.4
Example of Permanent Surface Water Control Pond Sign

Revised December 2015

Please see *http://www.ecy.wa.gov/copyright.html* for copyright notice including permissions, limitation of liability, and disclaimer.

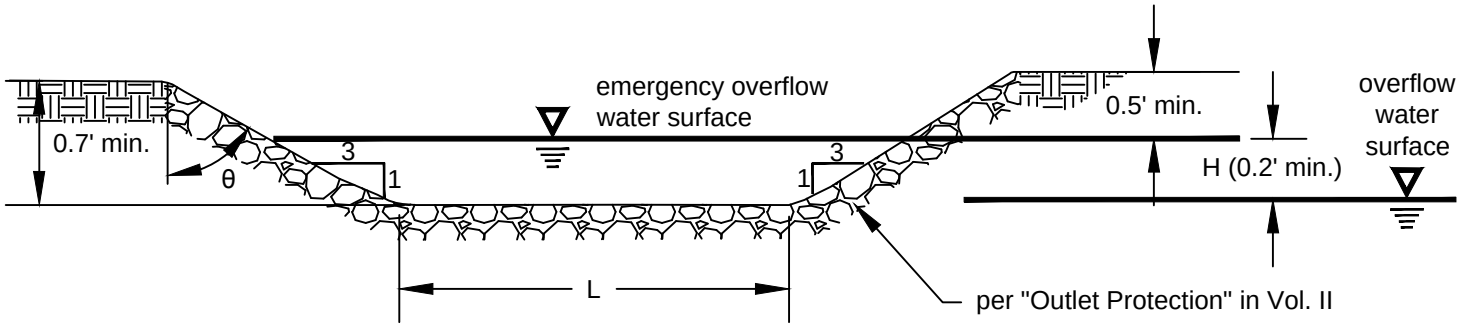

NOT TO SCALE

DEPARTMENT OF
ECOLOGY
State of Washington

Figure III-3.2.5
Weir Section for Emergency Overflow Spillway

Revised December 2015

Please see *http://www.ecy.wa.gov/copyright.html* for copyright notice including permissions, limitation of liability, and disclaimer.

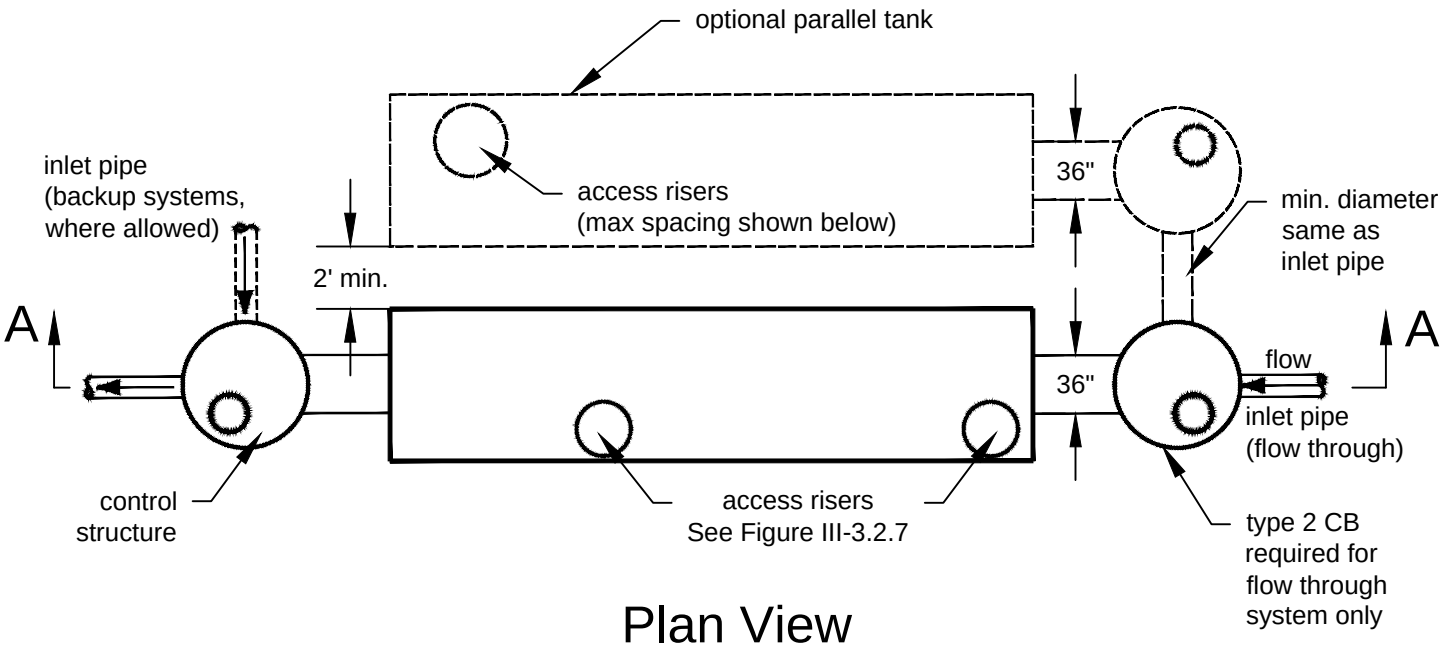

Plan View

"Flow-through" system shown solid.
Designs for "flow backup" system
and parallel tanks shown dashed.

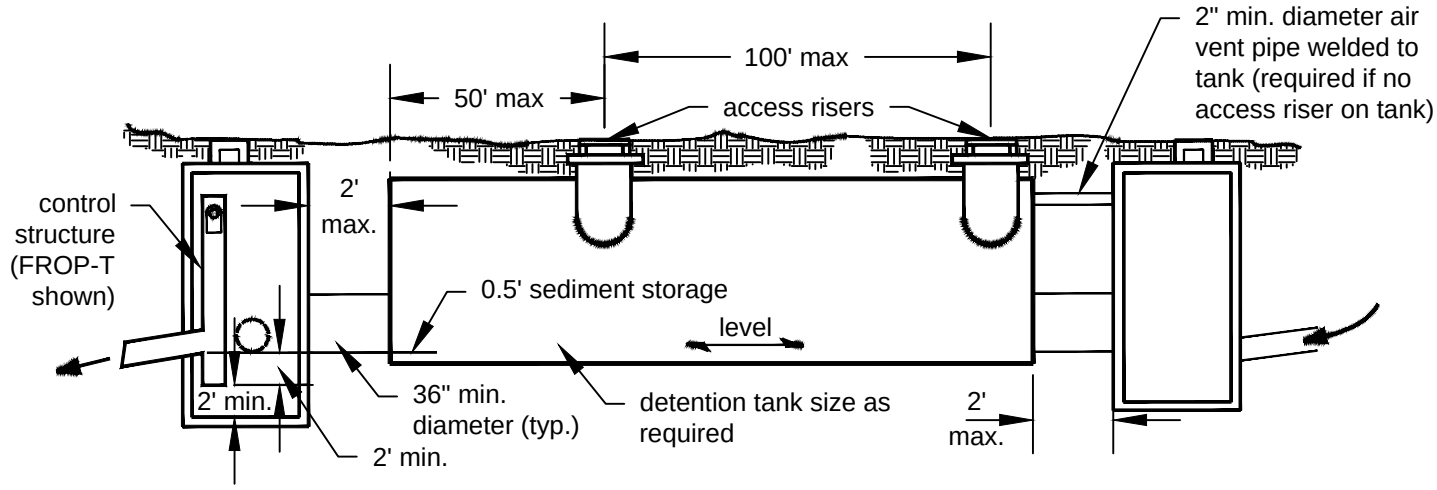

Section A-A

"Flow-through" system shown solid.

Note:
All metal parts corrosion resistant. Steel parts
galvanized and asphalt coated (Treatment 1 or better).

NOT TO SCALE

DEPARTMENT OF
ECOLOGY
State of Washington

Figure III-3.2.6
Typical Detention Tank

Revised December 2015

Please see *http://www.ecy.wa.gov/copyright.html* for copyright notice including permissions, limitation of liability, and disclaimer.

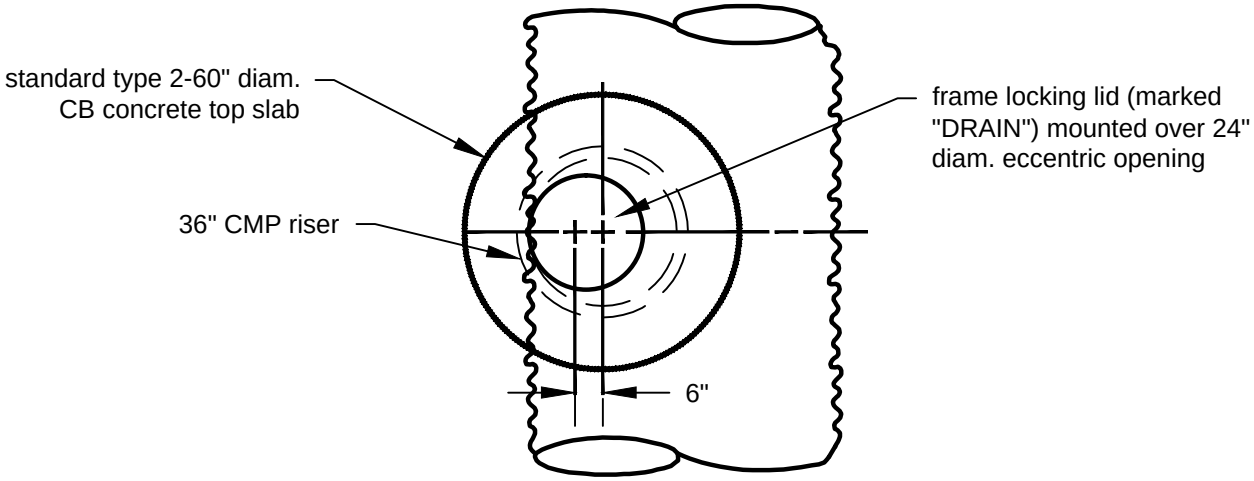

Plan

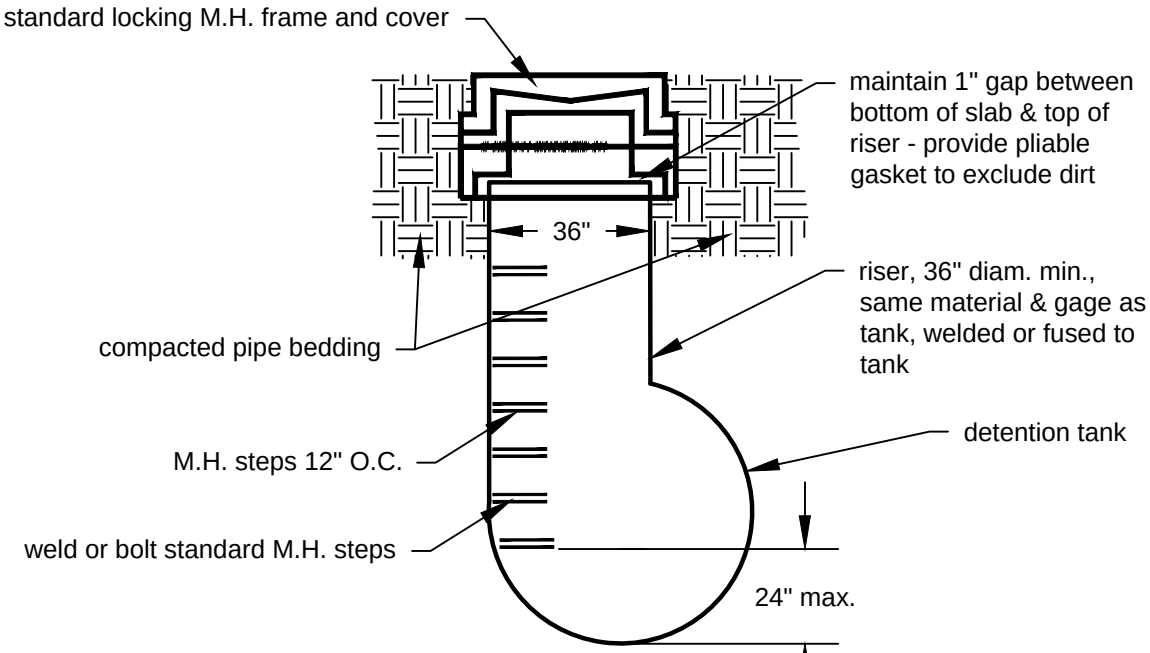

Section

Notes:
1. Use adjusting blocks as required to bring frame to grade.
2. All materials to be aluminum or galvanized and asphalt coated (Treatment 1 or better).
3. Must be located for access by maintenance vehicles.
4. May substitute WSDOT special Type IV manhole (RCP only)

NOT TO SCALE

DEPARTMENT OF
ECOLOGY
State of Washington

Figure III-3.2.7
Detention Tank Access Detail

Revised December 2015

Please see *http://www.ecy.wa.gov/copyright.html* for copyright notice including permissions, limitation of liability, and disclaimer.

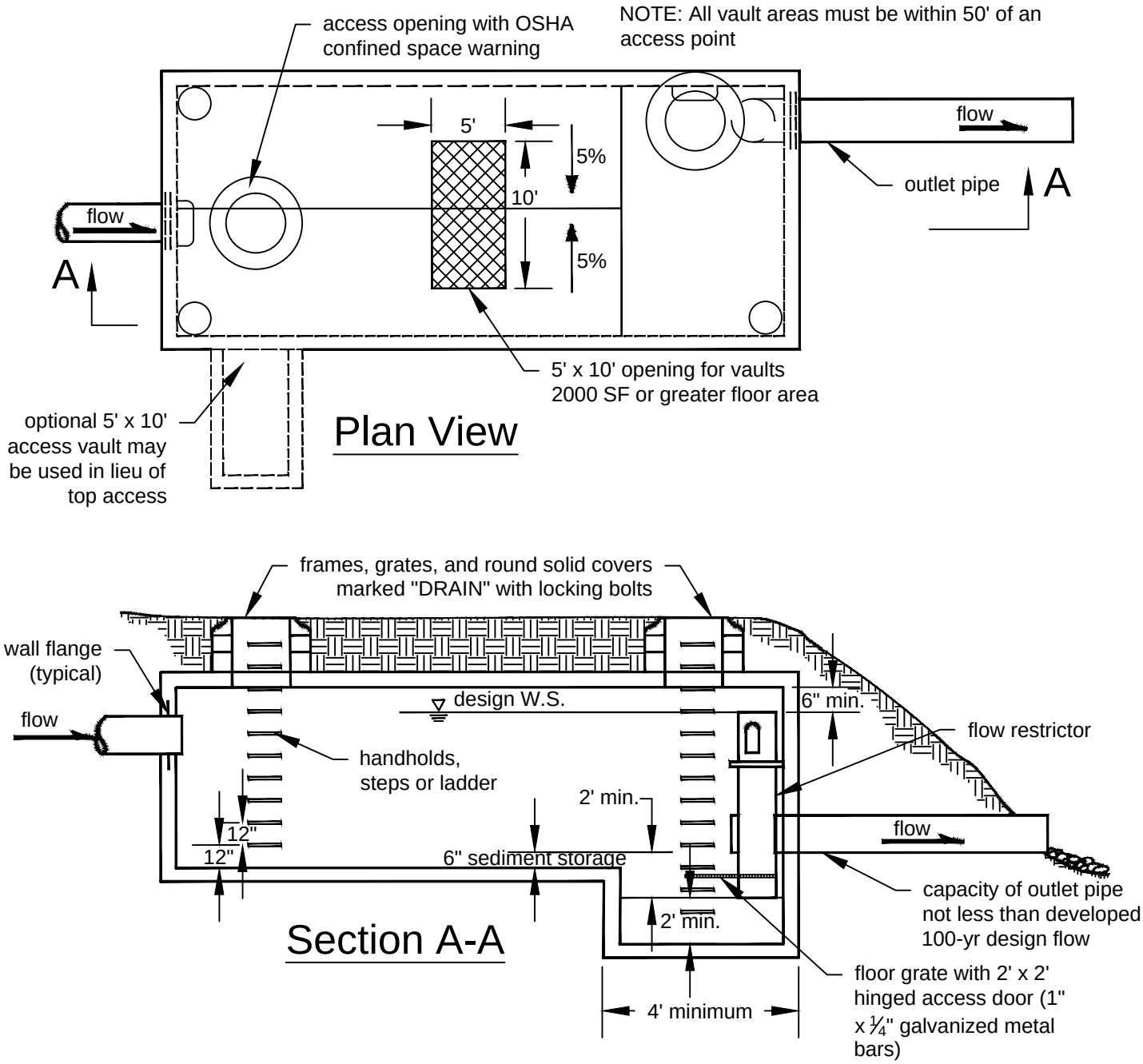

Notes:

1. All metal parts must be corrosion resistant. Steel parts must be galvanized and asphalt coated (Treatment 1 or better).
2. Provide water stop at all cast-in-place construction joints. Precast vaults shall have approved rubber gasket system.
3. Vaults ≤ 10' wide must use removable lids.
4. Prefabricated vault sections may require structural modifications to support 5' x 10' opening over main vault. Alternatively, access can be provided via a side vestibule as shown.

NOT TO SCALE

DEPARTMENT OF ECOLOGY
State of Washington

Figure III-3.2.8
Typical Detention Vault

Revised December 2015

Please see *http://www.ecy.wa.gov/copyright.html* for copyright notice including permissions, limitation of liability, and disclaimer.

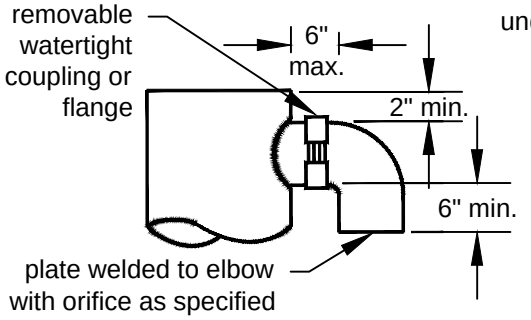

Elbow Restrictor Detail

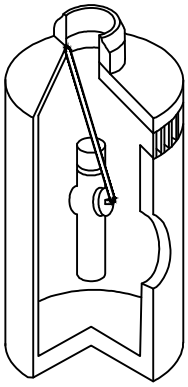

Isometric

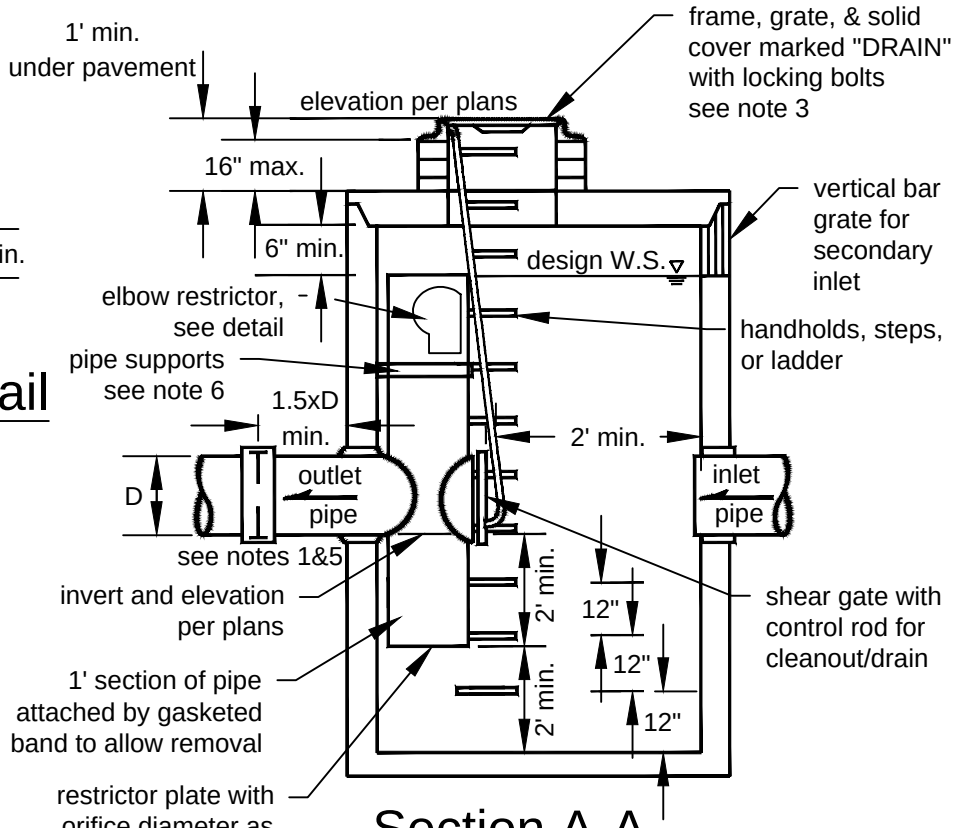

Section A-A

Notes:

1. Use a minimum of a 54" diameter type 2 catch basin.
2. Outlet Capacity: 100-yr developed peak flow.
3. Metal Parts: Corrosion resistant. Non-Galvanized parts preferred. Galvanized pipe parts to have asphalt treatment 1.
4. Frame and ladder or steps offset so:
   A. Cleanout gate is visible from top.
   B. Climb-down space is clear of riser and cleanout gate.
   C. Frame is clear of curb.
5. If metal outlet pipe connects to cement concrete pipe: outlet pipe to have smooth O.D. equal to concrete pipe I.D. less ¼".
6. Provide at least one 3" x 0.90 inches support bracket anchored to concrete wall. (maximum 3'-0" vertical spacing)
7. Locate elbow restrictor(s) as necessary to provide minimum clearance as shown.
8. Locate additional ladder rungs in structures used as access to tanks or vaults to allow access when catch basin is filled with water.

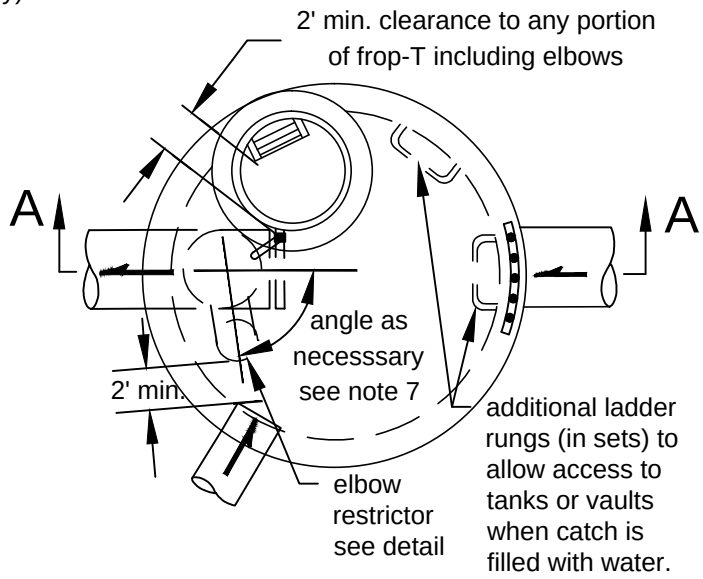

Plan View

NOT TO SCALE

DEPARTMENT OF ECOLOGY
State of Washington

Figure III-3.2.9
Flow Restrictor (TEE)

Revised December 2015

Please see *http://www.ecy.wa.gov/copyright.html* for copyright notice including permissions, limitation of liability, and disclaimer.

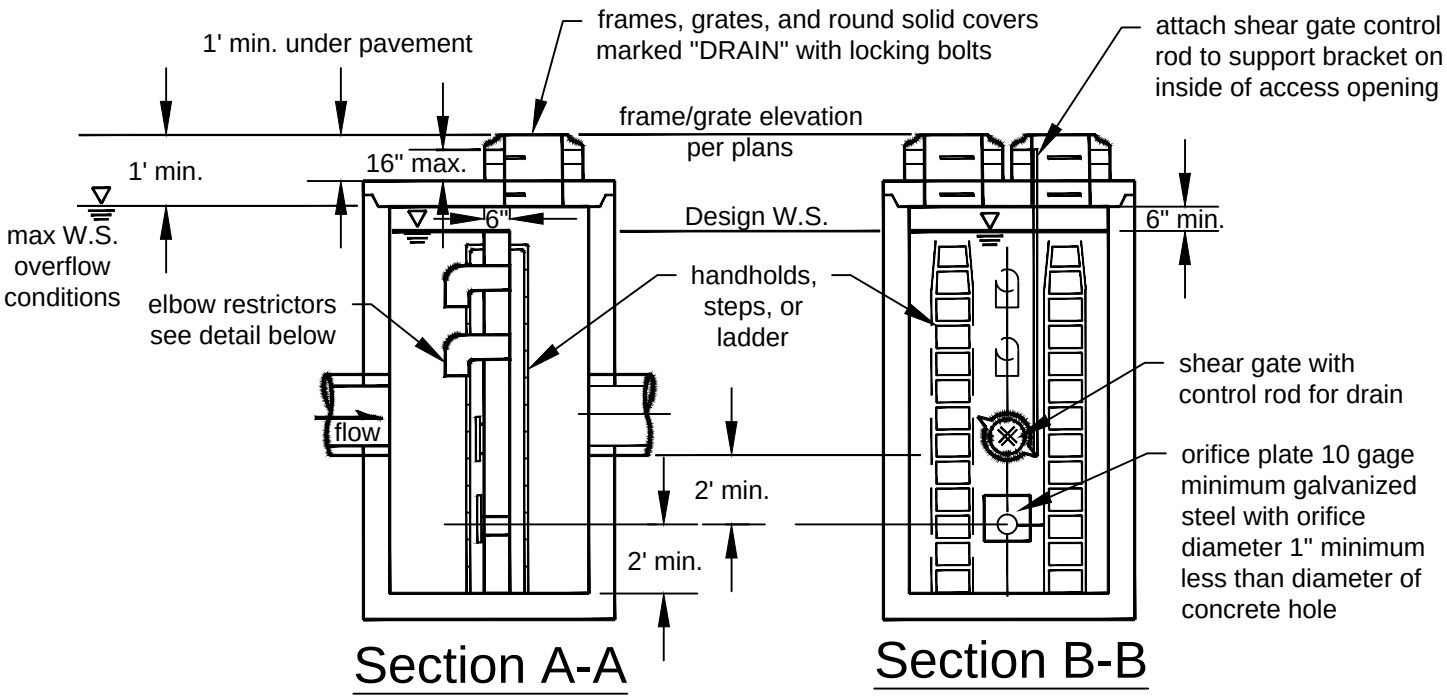

Section A-A

Section B-B

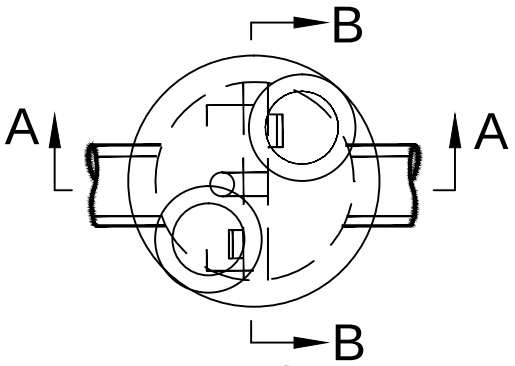

Plan View

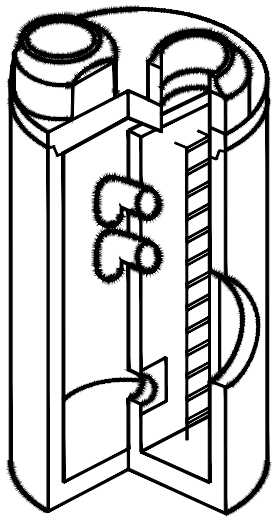

Isometric

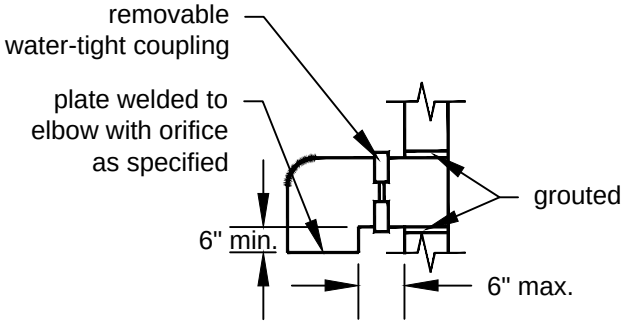

Elbow Restrictor Detail

Notes:

1. Outlet capacity: 100 year developed peak flow
2. Metal parts: corrosion resistant steel parts galvanized and asphalt coated
3. Catch basin: type 2 minimum 72" diameter
4. Orifices: sized and located as required with lowest orifice a minimum of 2' from base

NOT TO SCALE

DEPARTMENT OF ECOLOGY State of Washington

Figure III-3.2.10
Flow Restrictor (Baffle)

Revised December 2015

Please see *http://www.ecy.wa.gov/copyright.html* for copyright notice including permissions, limitation of liability, and disclaimer.

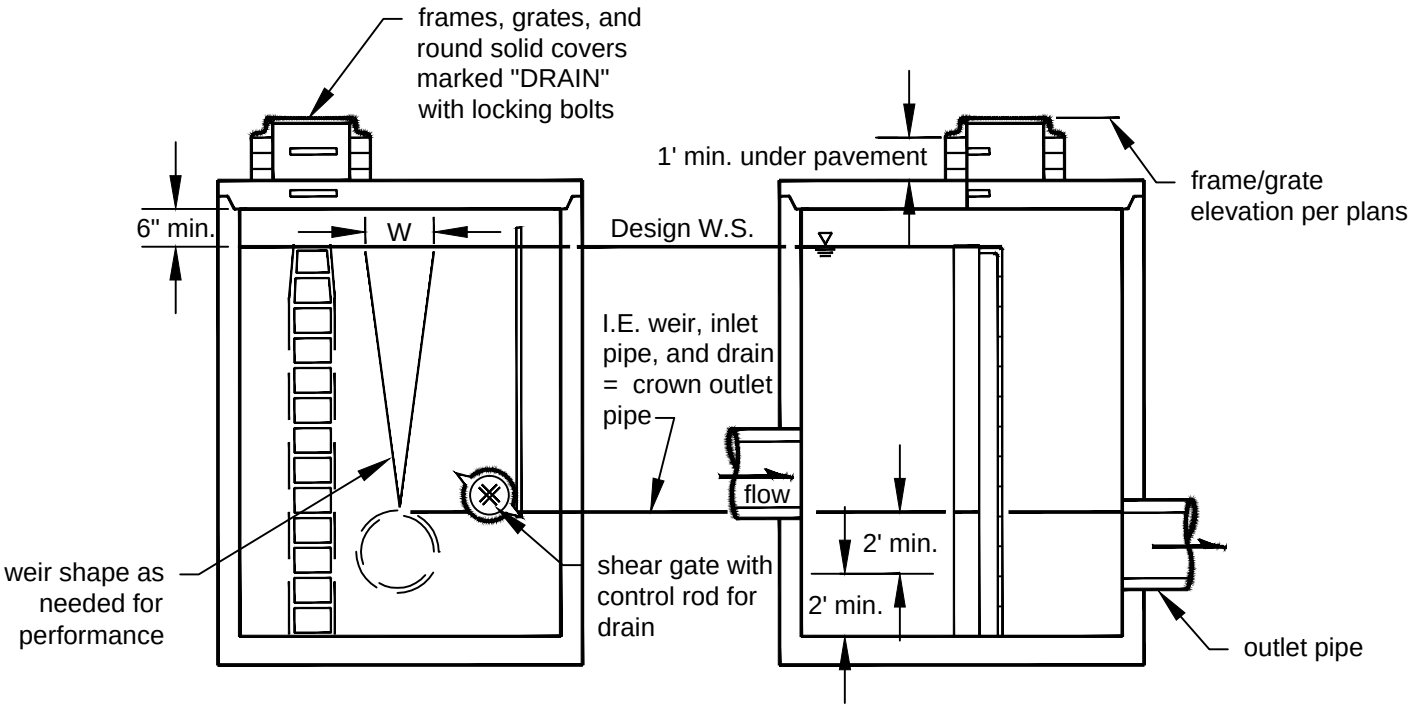

Section B-B

Section A-A

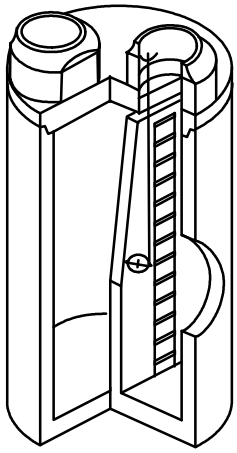

Isometric

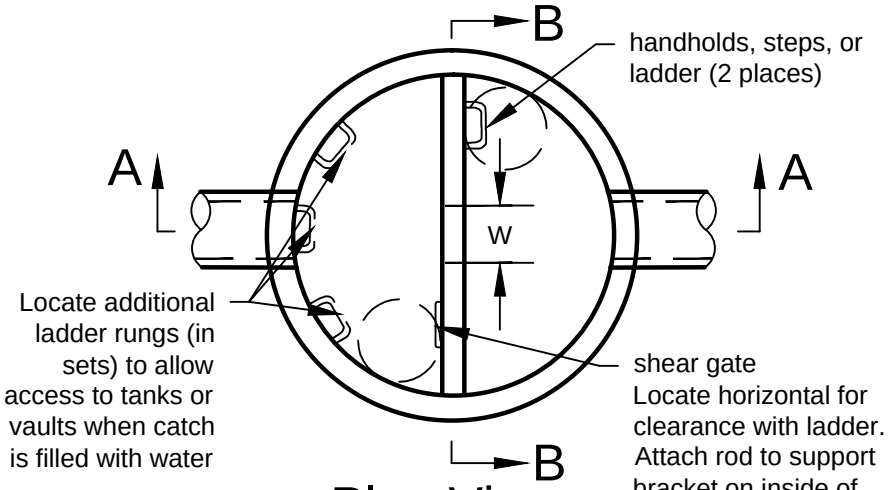

Plan View

Notes:

1. Outlet Capacity: 100-year developed peak flow.
2. Metal Parts: corrosion resistant steel parts galvanized and asphalt coated.
3. Catch Basin: type 2 min. 72" diameter.
4. Baffle Wall: to be designed with concrete reinforcing as required.
5. Spill containment must be provided to temporarily detain oil or floatable pollutants in runoff due to accidental spill or illegal dumping.

NOT TO SCALE

DEPARTMENT OF ECOLOGY
State of Washington

Figure III-3.2.11
Flow Restrictor (Weir)

Revised December 2015

Please see *http://www.ecy.wa.gov/copyright.html* for copyright notice including permissions, limitation of liability, and disclaimer.

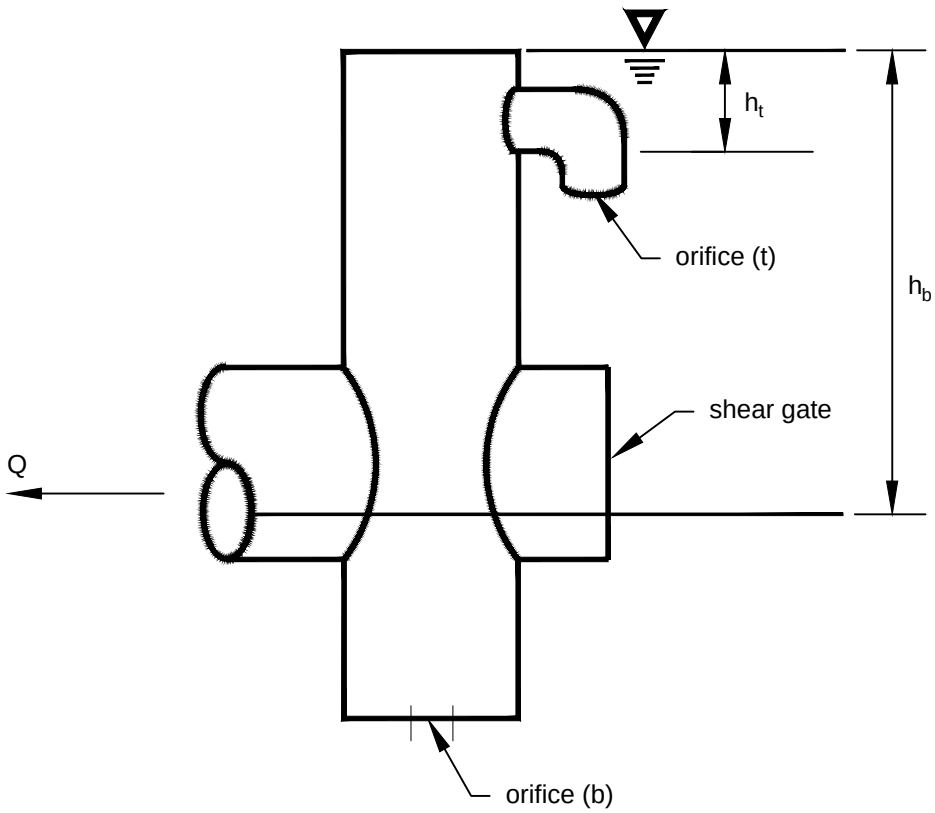

$$Q = CA_b\sqrt{2gh_b} + CA_t\sqrt{2gh_t}$$
$$= C\sqrt{2g}(A_b\sqrt{h_b} + A_t\sqrt{h_t})$$

h_b = distance from hydraulic grade line at the 2 – year flow of the outflow pipe to the overflow elevation

NOT TO SCALE

DEPARTMENT OF
ECOLOGY
State of Washington

Figure III-3.2.12
Simple Orifice

Revised December 2015

Please see *http://www.ecy.wa.gov/copyright.html* for copyright notice including permissions, limitation of liability, and disclaimer.

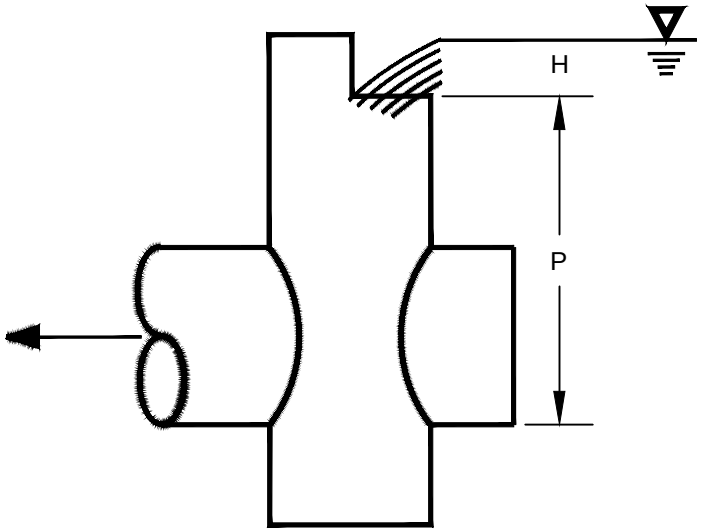

Section

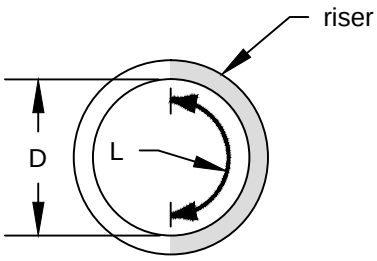

Plan

NOT TO SCALE

DEPARTMENT OF
ECOLOGY
State of Washington

Figure III-3.2.13
Rectangular, Sharp-Crested Weir

Revised December 2015

Please see *http://www.ecy.wa.gov/copyright.html* for copyright notice including permissions, limitation of liability, and disclaimer.

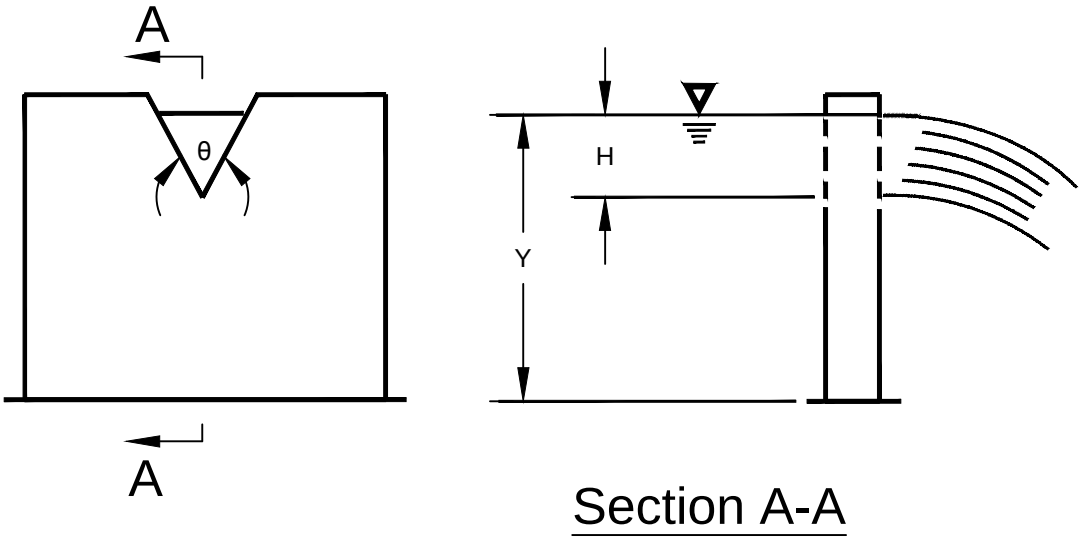

$$Q = C_d(\text{Tan}\,\frac{\theta}{2})H^{\frac{5}{2}} \text{ in cfs}$$

Where values of C_d may be taken from the following chart :

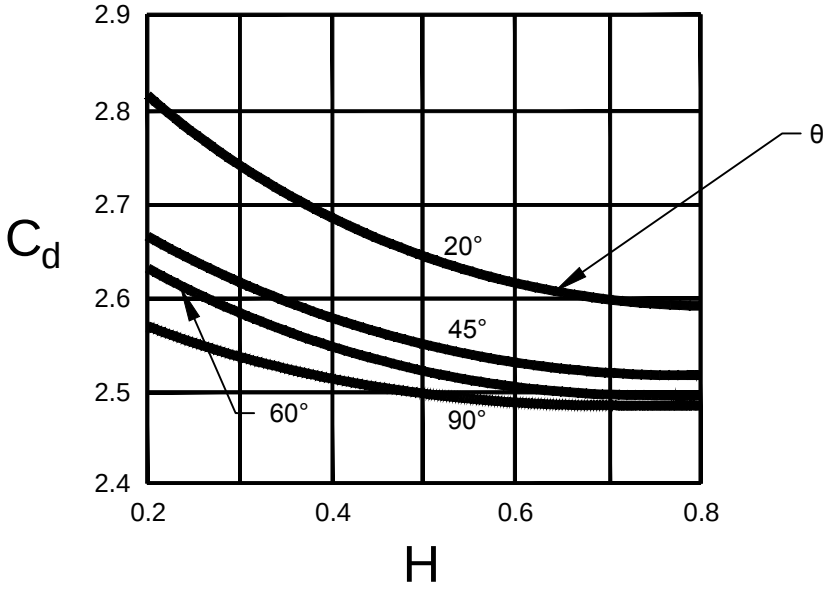

NOT TO SCALE

DEPARTMENT OF
ECOLOGY
State of Washington

Figure III-3.2.14
V-Notch, Sharp Crested Weir

Revised December 2015

Please see *http://www.ecy.wa.gov/copyright.html* for copyright notice including permissions, limitation of liability, and disclaimer.

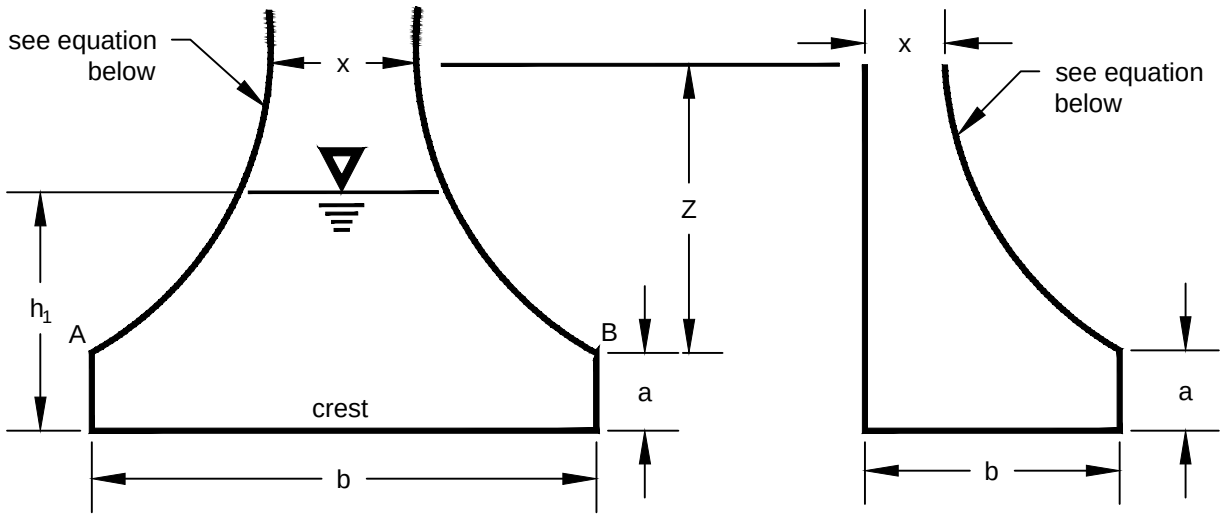

Symmetrical

Non-symmetrical

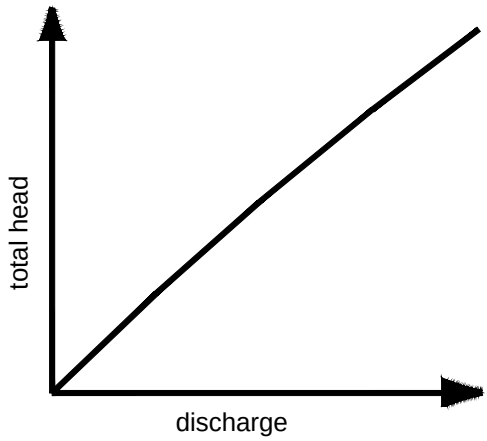

NOT TO SCALE

DEPARTMENT OF
ECOLOGY
State of Washington

Figure III-3.2.15
Sutro Weir

Revised December 2015

Please see *http://www.ecy.wa.gov/copyright.html* for copyright notice including permissions, limitation of liability, and disclaimer.

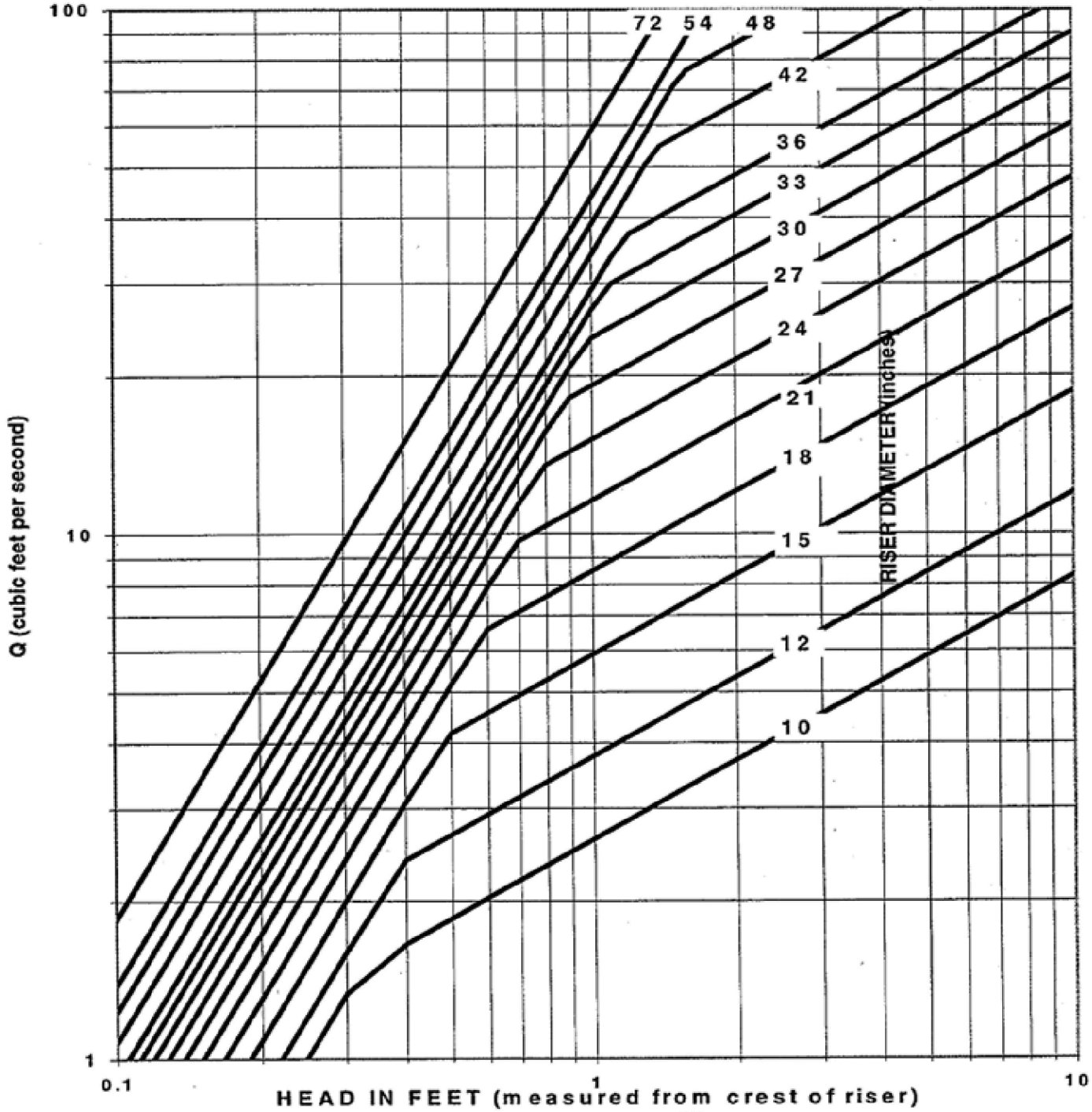

$Q_{weir} = 9.739\ DH^{3/2}$

$Q_{orifice} = 3.782\ D^2H^{1/2}$

Q in cfs, D and H in feet

Slope change occurs at weir-orifice transition

DEPARTMENT OF ECOLOGY
State of Washington

Figure III-3.2.16
Riser Inflow Curves

Revised December 2015

Please see *http://www.ecy.wa.gov/copyright.html* for copyright notice including permissions, limitation of liability, and disclaimer.

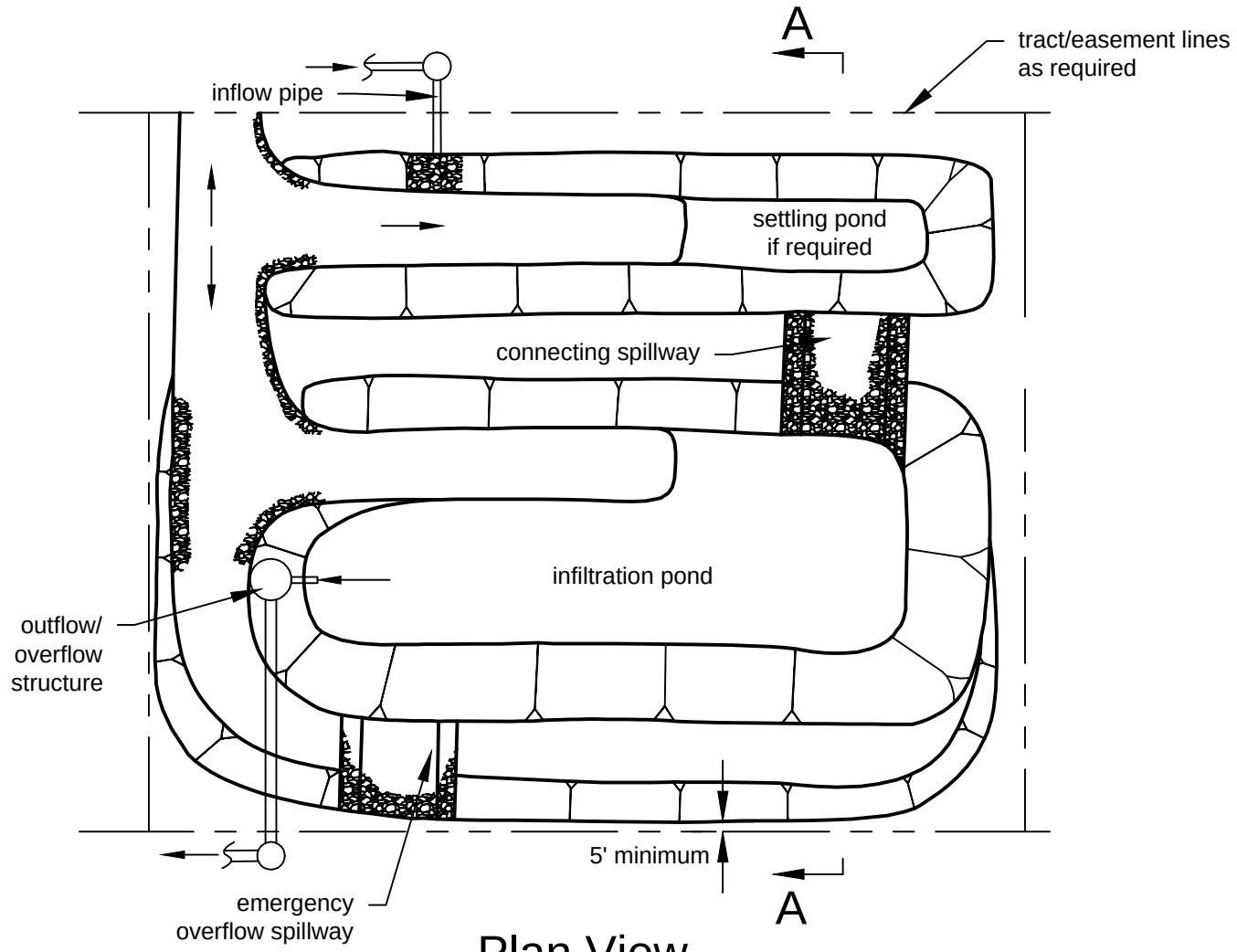

Plan View

overflow/emergency overflow

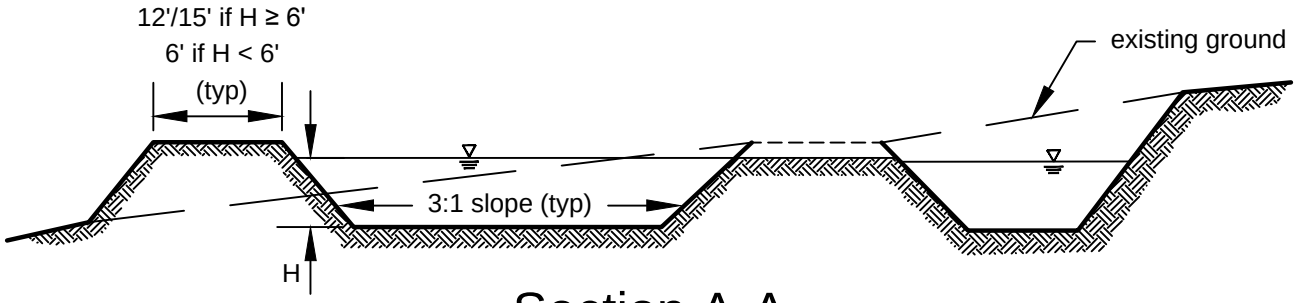

Section A-A

Note:
Detail is a schematic representation only. Actual configuration will vary depending on specific site constraints and applicable design criteria.

NOT TO SCALE

DEPARTMENT OF
ECOLOGY
State of Washington

Figure III-3.3.1
Typical Infiltration Pond/Basin

Revised December 2015

Please see *http://www.ecy.wa.gov/copyright.html* for copyright notice including permissions, limitation of liability, and disclaimer.

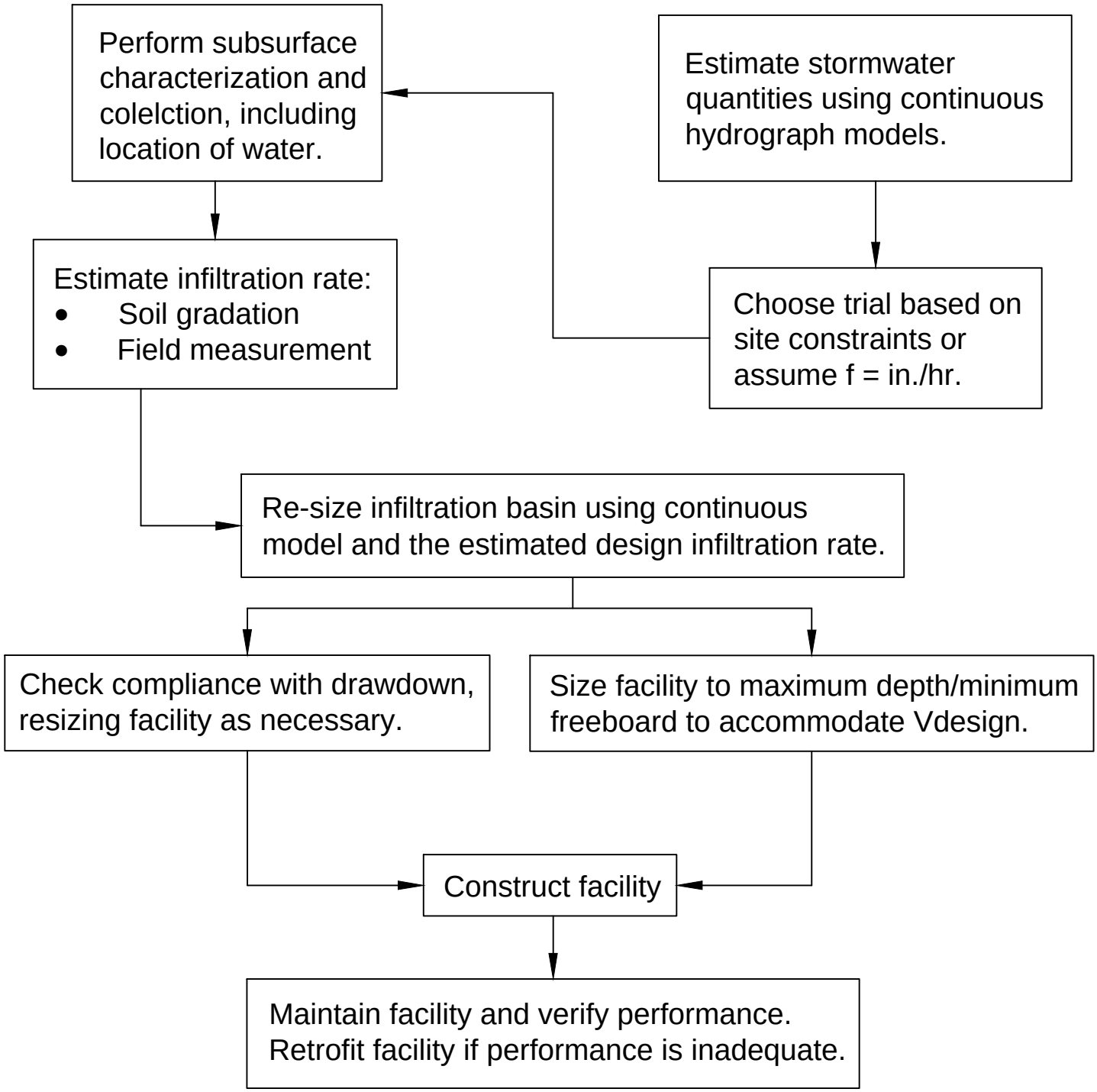

DEPARTMENT OF ECOLOGY
State of Washington

Figure III-3.3.2
Steps for Design of Infiltration Facilities - Simplified Approach

Revised December 2015

Please see *http://www.ecy.wa.gov/copyright.html* for copyright notice including permissions, limitation of liability, and disclaimer.

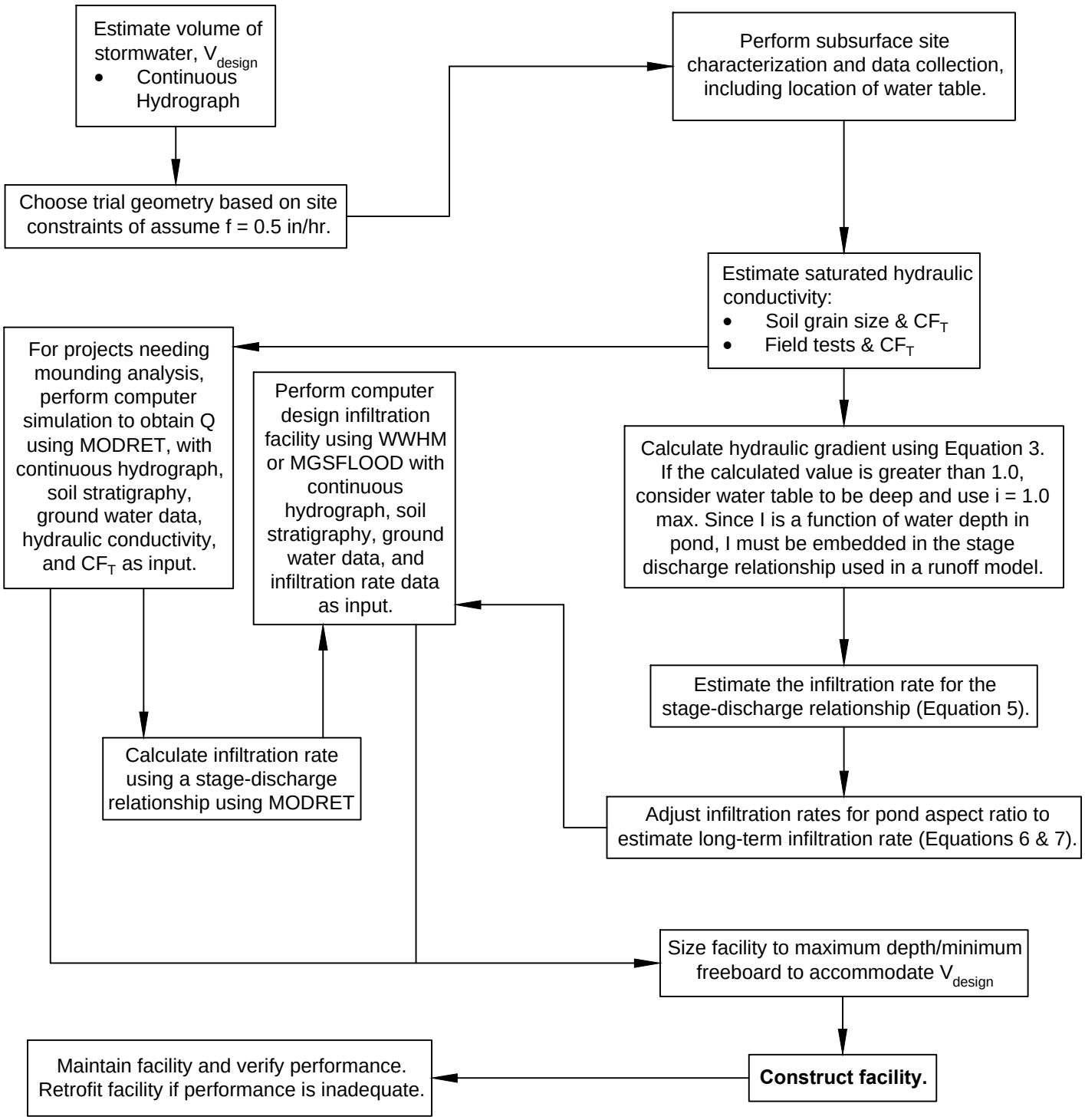

DEPARTMENT OF ECOLOGY
State of Washington

Figure III-3.3.3
Engineering Design Steps for Final Design of Infiltration Facilities Using the Detailed Method

Revised December 2015

Please see *http://www.ecy.wa.gov/copyright.html* for copyright notice including permissions, limitation of liability, and disclaimer.

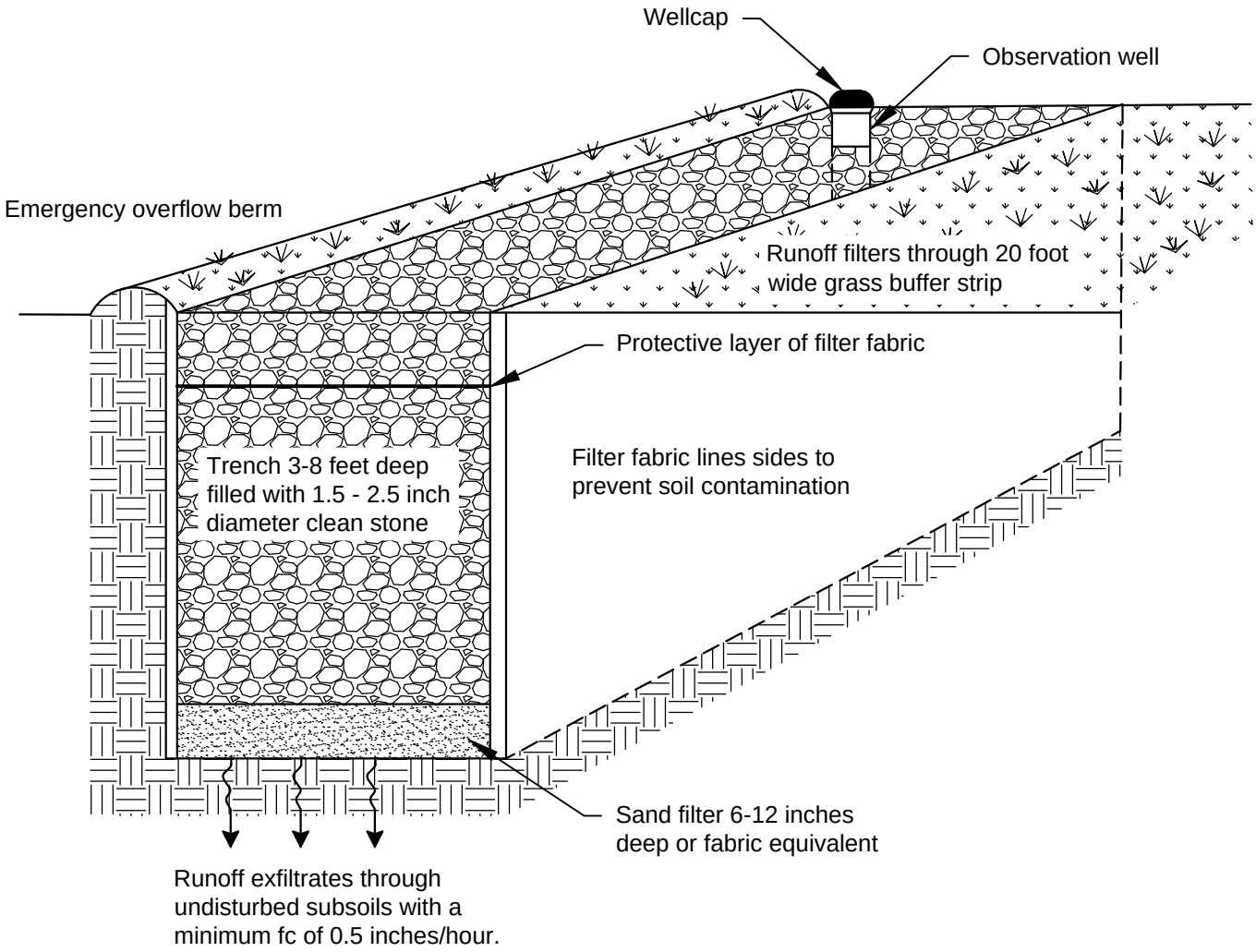

NOT TO SCALE

DEPARTMENT OF ECOLOGY
State of Washington

Figure III-3.3.4
Schematic of an Infiltration Trench

Revised December 2015

Please see *http://www.ecy.wa.gov/copyright.html* for copyright notice including permissions, limitation of liability, and disclaimer.

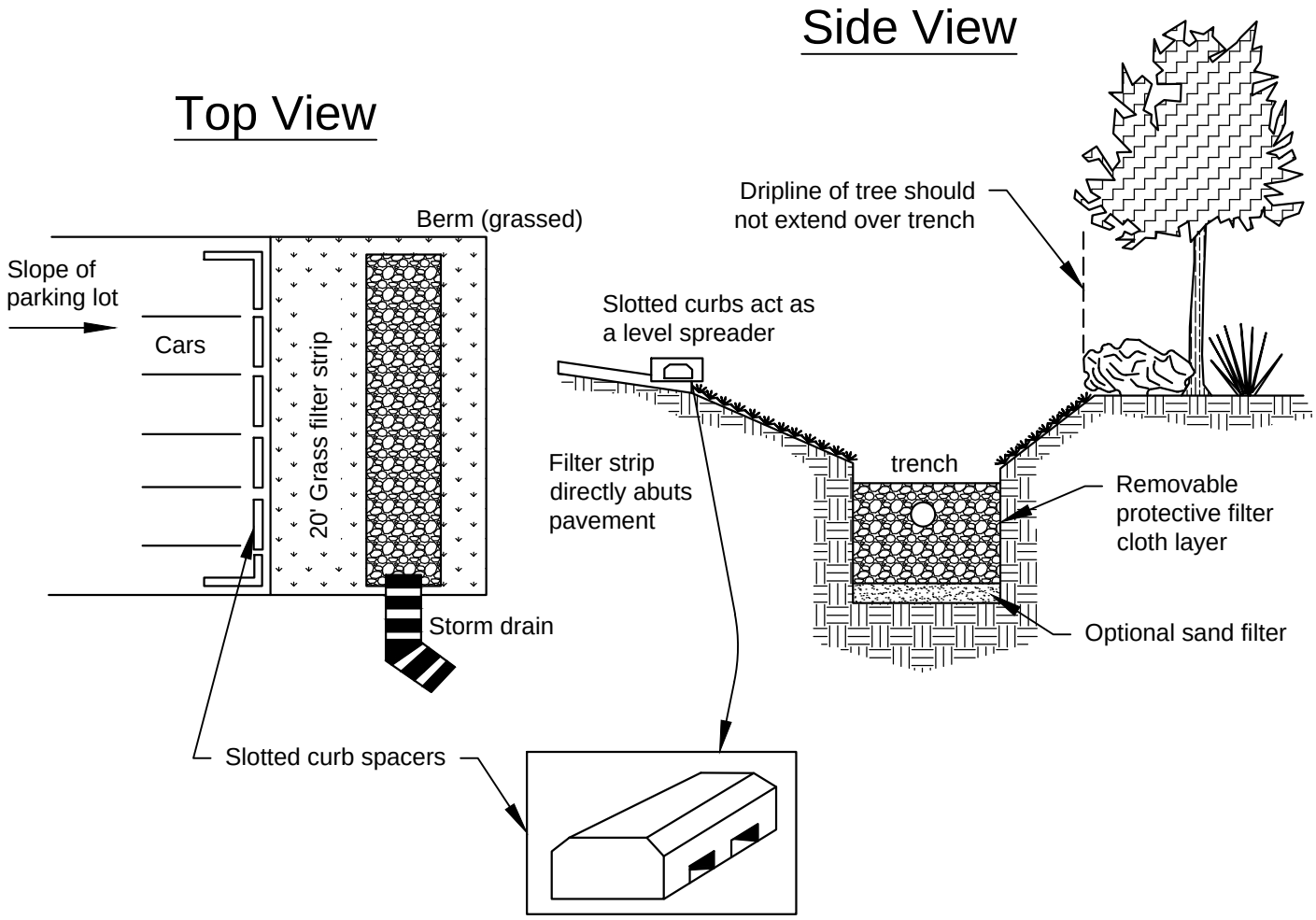

NOT TO SCALE

DEPARTMENT OF ECOLOGY
State of Washington

Figure III-3.3.5
Parking Lot Perimeter Trench Design

Revised December 2015

Please see *http://www.ecy.wa.gov/copyright.html* for copyright notice including permissions, limitation of liability, and disclaimer.

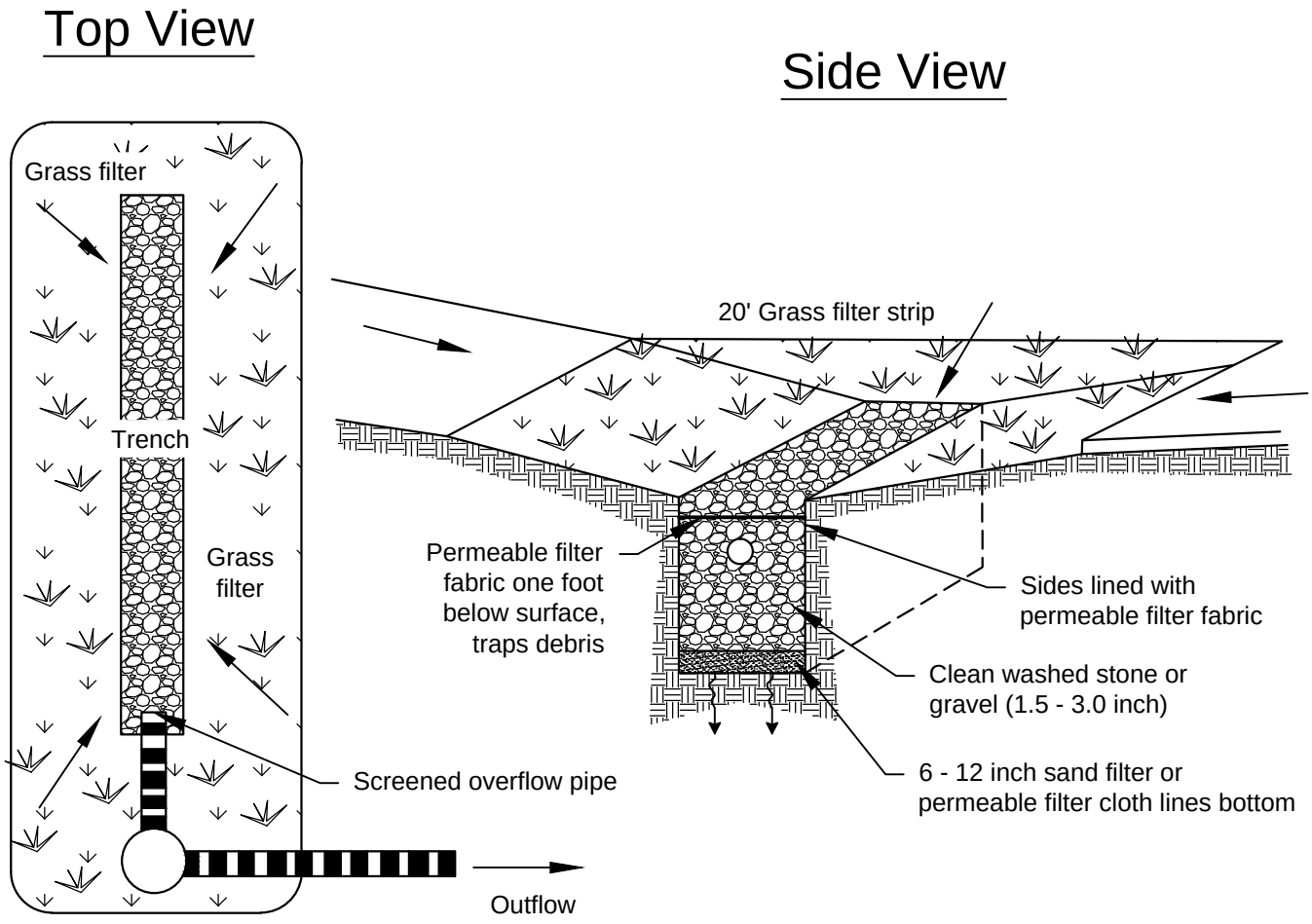

NOT TO SCALE

DEPARTMENT OF ECOLOGY
State of Washington

Figure III-3.3.6
Median Strip Trench Design

Revised December 2015

Please see *http://www.ecy.wa.gov/copyright.html* for copyright notice including permissions, limitation of liability, and disclaimer.

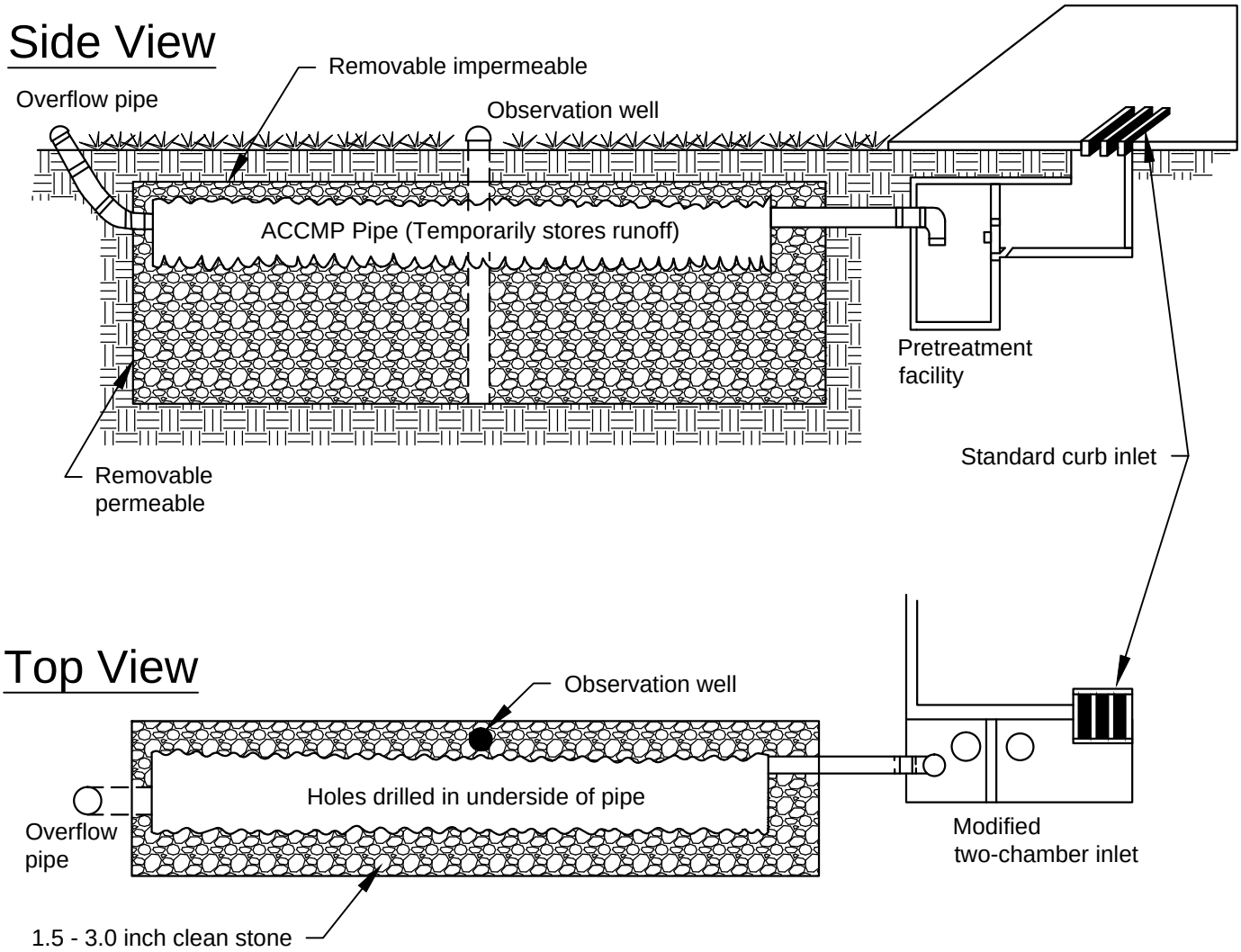

ACCMP - Asphalt Coated Corrugated Metal Pipe

NOT TO SCALE

DEPARTMENT OF ECOLOGY
State of Washington

Figure III-3.3.7
Oversized Pipe Trench Design

Revised December 2015

Please see *http://www.ecy.wa.gov/copyright.html* for copyright notice including permissions, limitation of liability, and disclaimer.

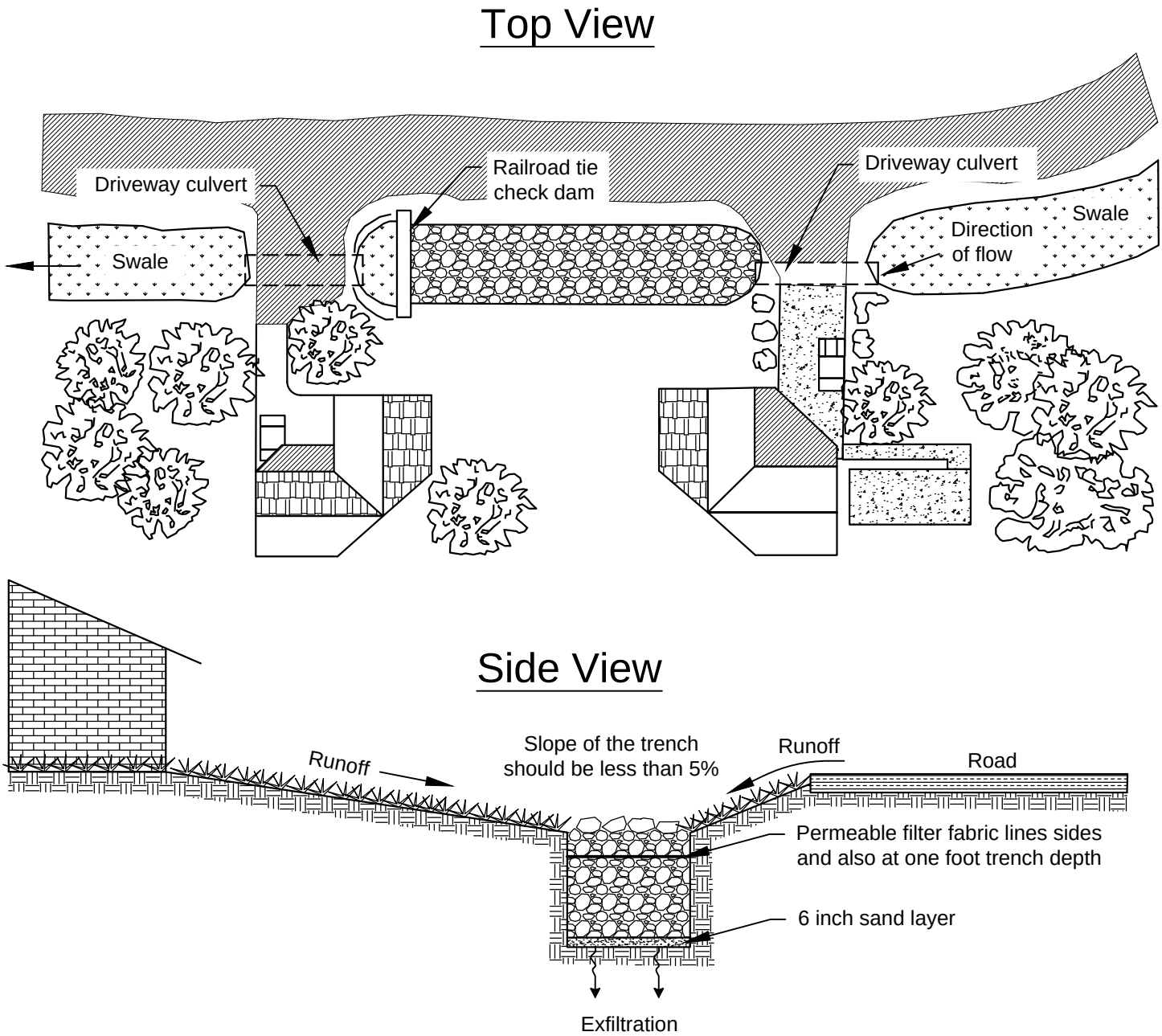

NOT TO SCALE

DEPARTMENT OF
ECOLOGY
State of Washington

Figure III-3.3.8
Swale/Trench Design

Revised December 2015

Please see *http://www.ecy.wa.gov/copyright.html* for copyright notice including permissions, limitation of liability, and disclaimer.

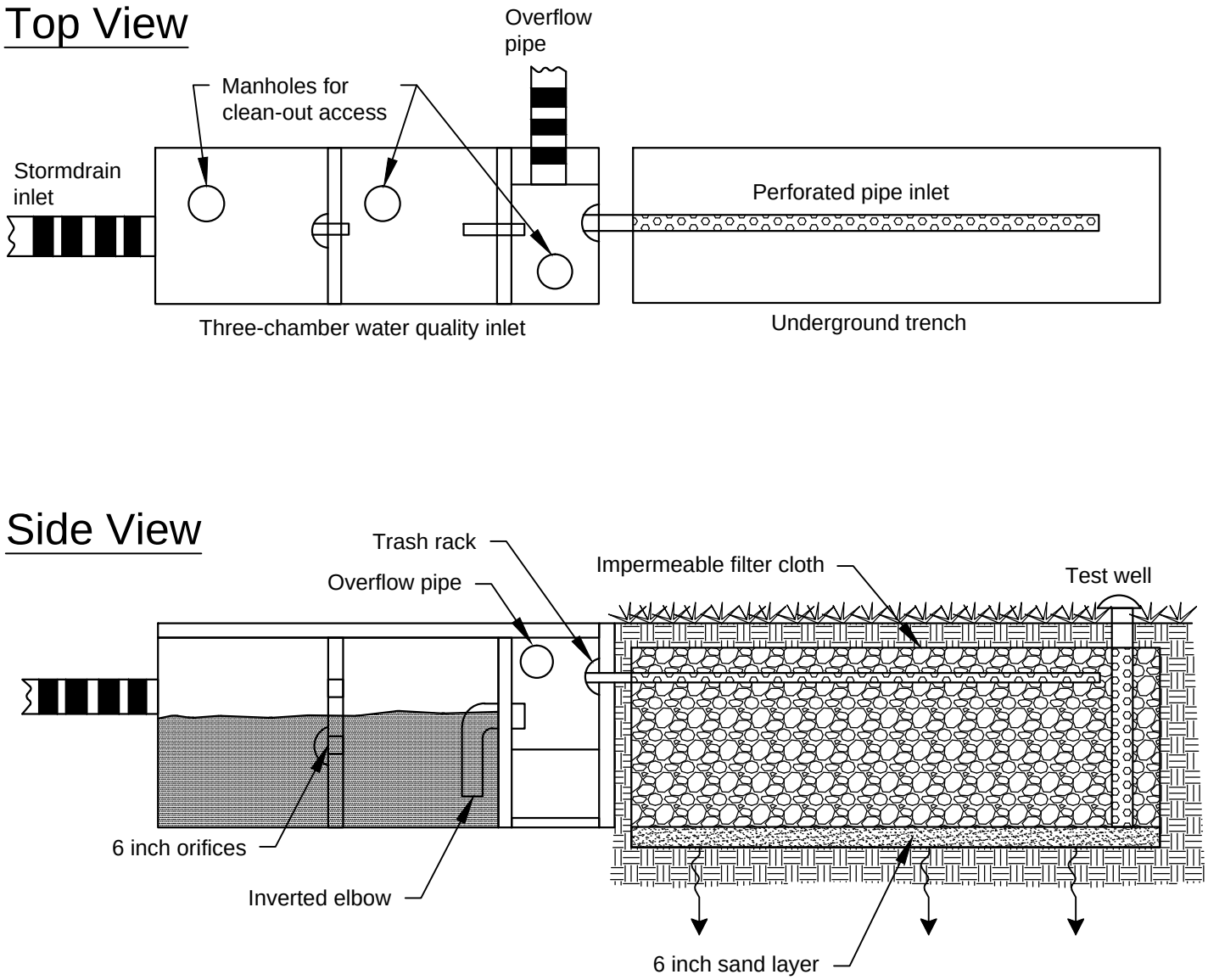

NOT TO SCALE

DEPARTMENT OF ECOLOGY
State of Washington

Figure III-3.3.9
Underground Trench with Oil/Grit Chamber

Revised December 2015

Please see *http://www.ecy.wa.gov/copyright.html* for copyright notice including permissions, limitation of liability, and disclaimer.

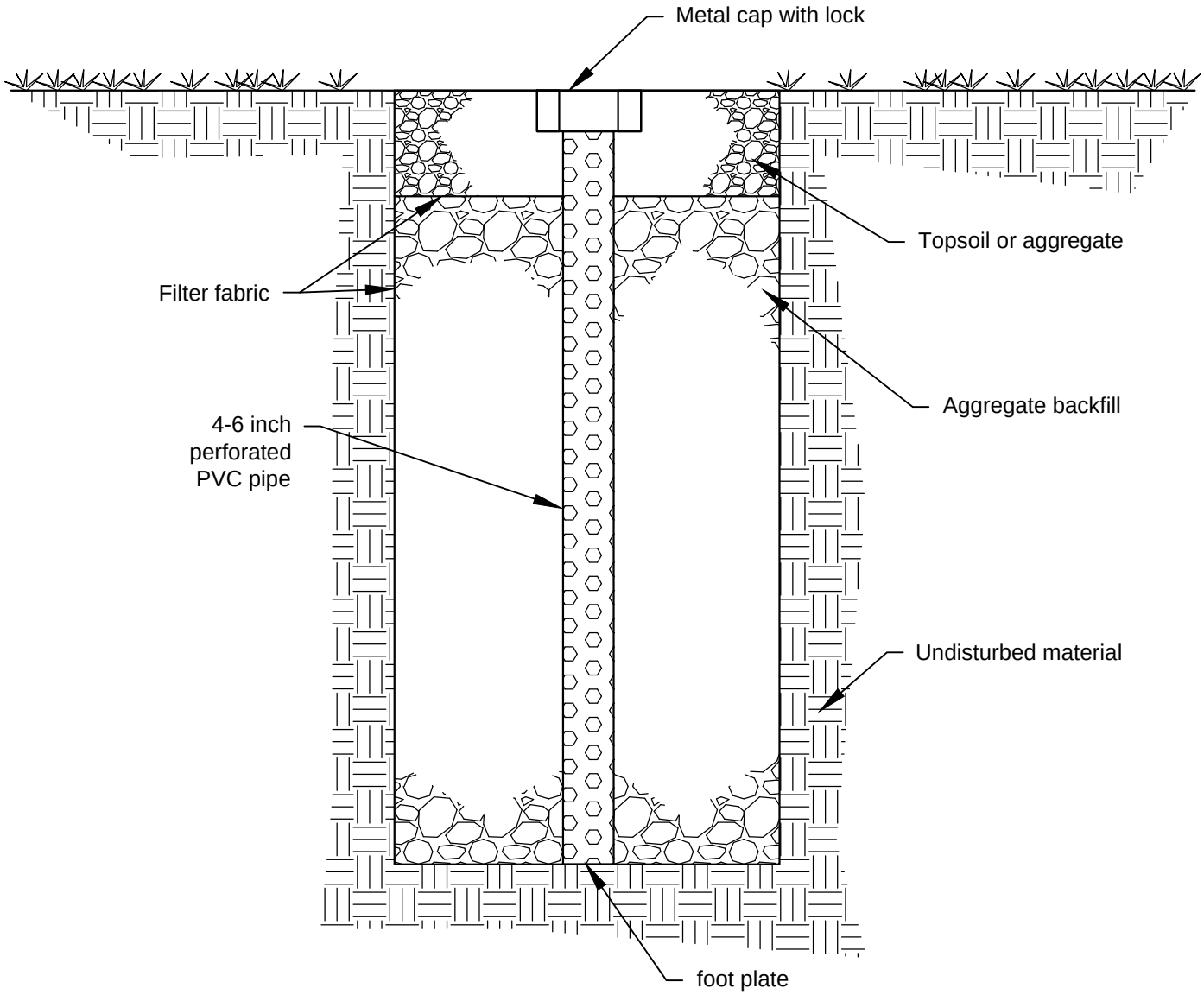

NOT TO SCALE

DEPARTMENT OF
ECOLOGY
State of Washington

Figure III-3.3.10
Observation Well Details

Revised December 2015

Please see *http://www.ecy.wa.gov/copyright.html* for copyright notice including permissions, limitation of liability, and disclaimer.

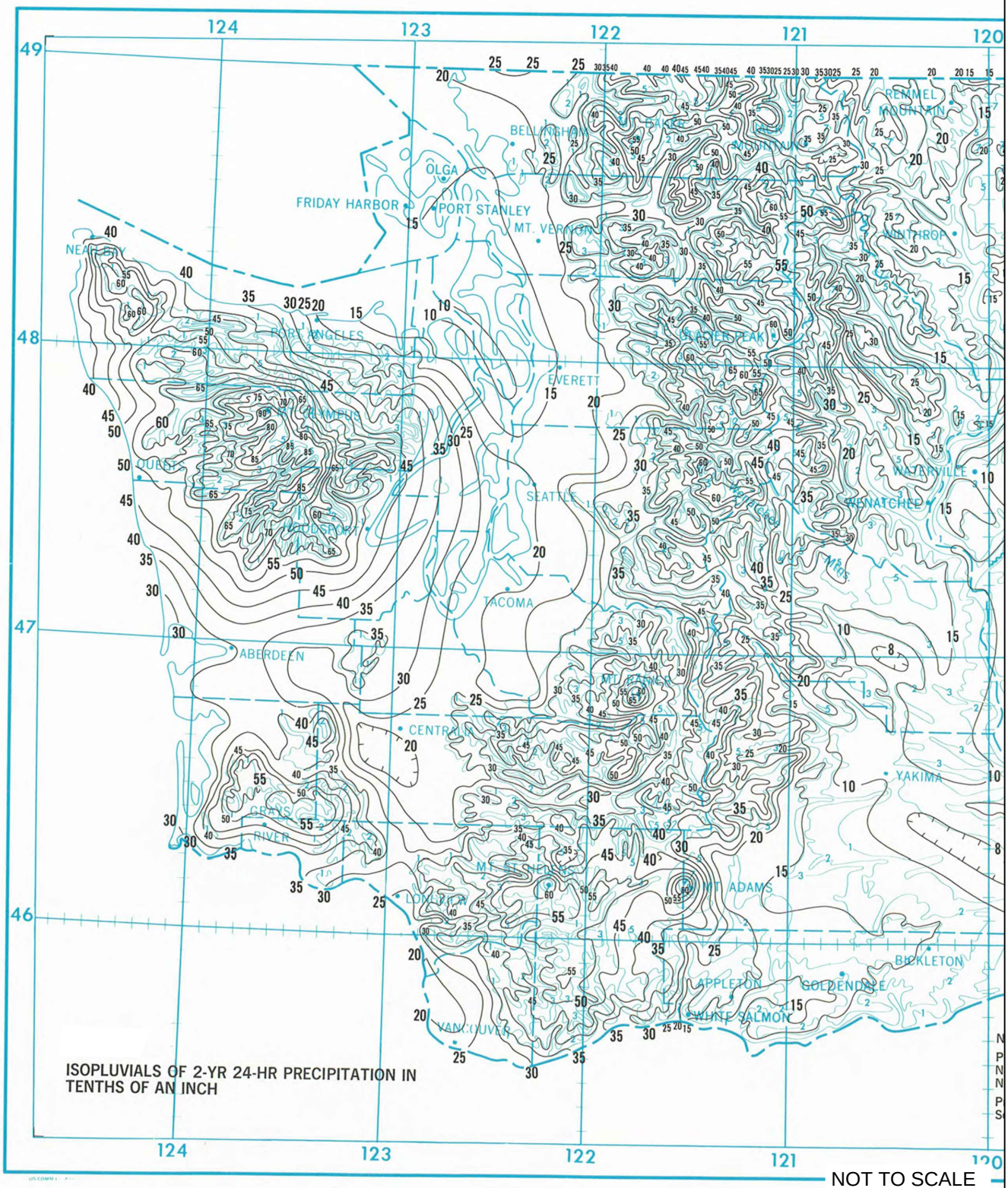

NOT TO SCALE

DEPARTMENT OF ECOLOGY
State of Washington

Figure III-A.1
Western Washington Isopluvial
2-year, 24 hour

Revised January 2016

Please see *http://www.ecy.wa.gov/copyright.html* for copyright notice including permissions, limitation of liability, and disclaimer.

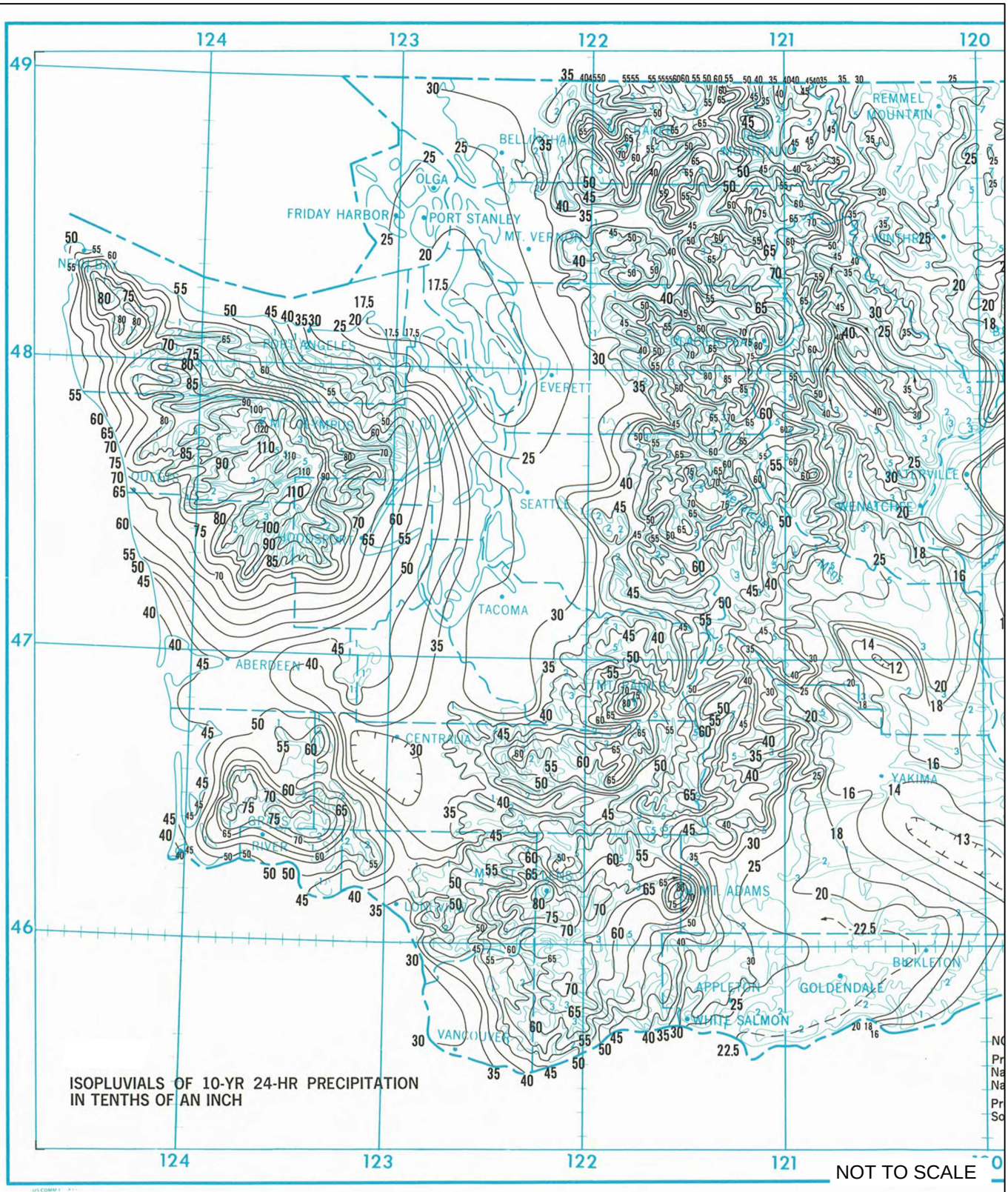

DEPARTMENT OF
ECOLOGY
State of Washington

Figure III-A.2
Western Washington Isopluvial
10-year, 24 hour

Revised January 2016

Please see *http://www.ecy.wa.gov/copyright.html* for copyright notice including permissions, limitation of liability, and disclaimer.

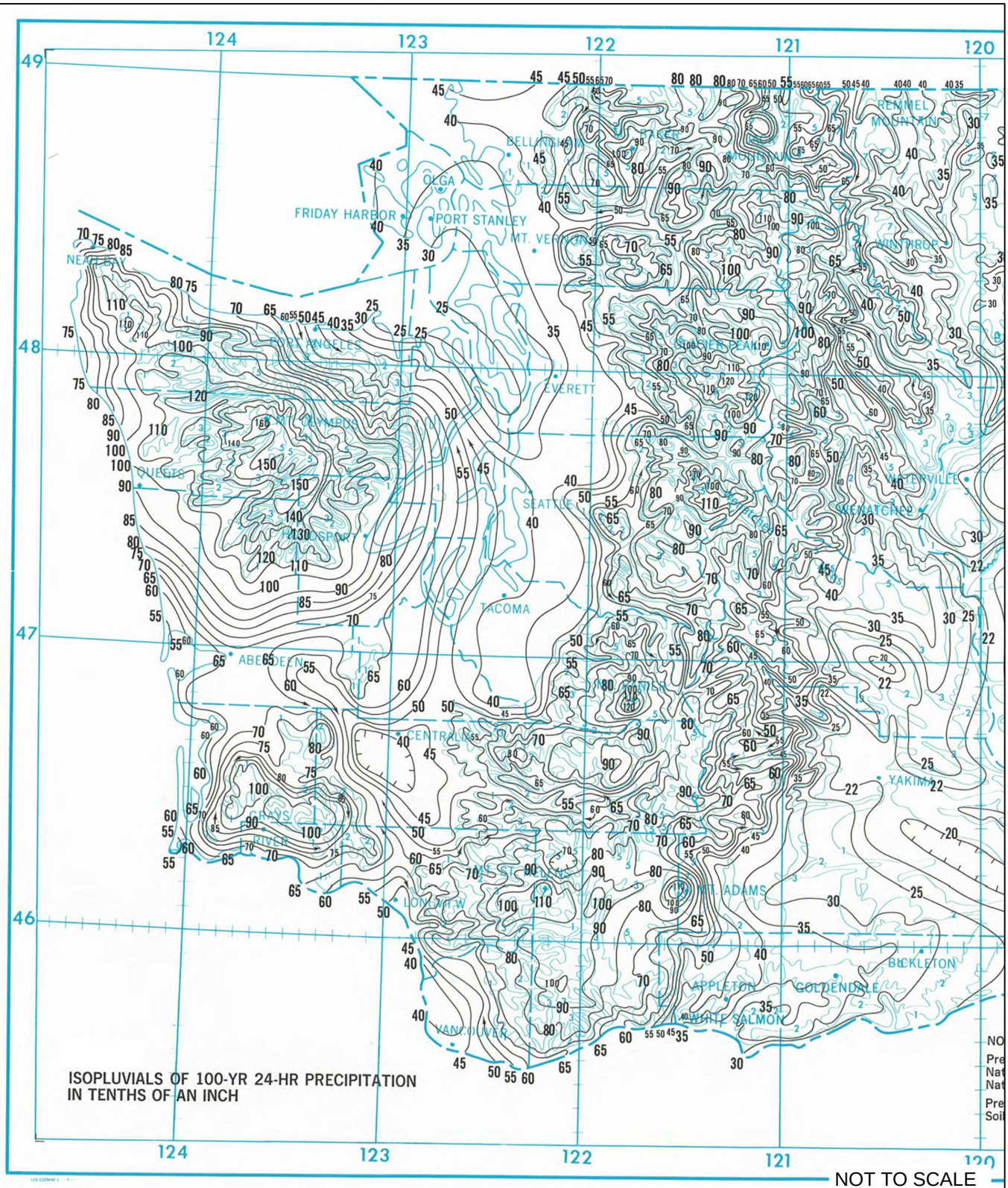

NOT TO SCALE

DEPARTMENT OF
ECOLOGY
State of Washington

Figure III-A.3
Western Washington Isopluvial
100-year, 24 hour

Revised January 2016

Please see *http://www.ecy.wa.gov/copyright.html* for copyright notice including permissions, limitation of liability, and disclaimer.

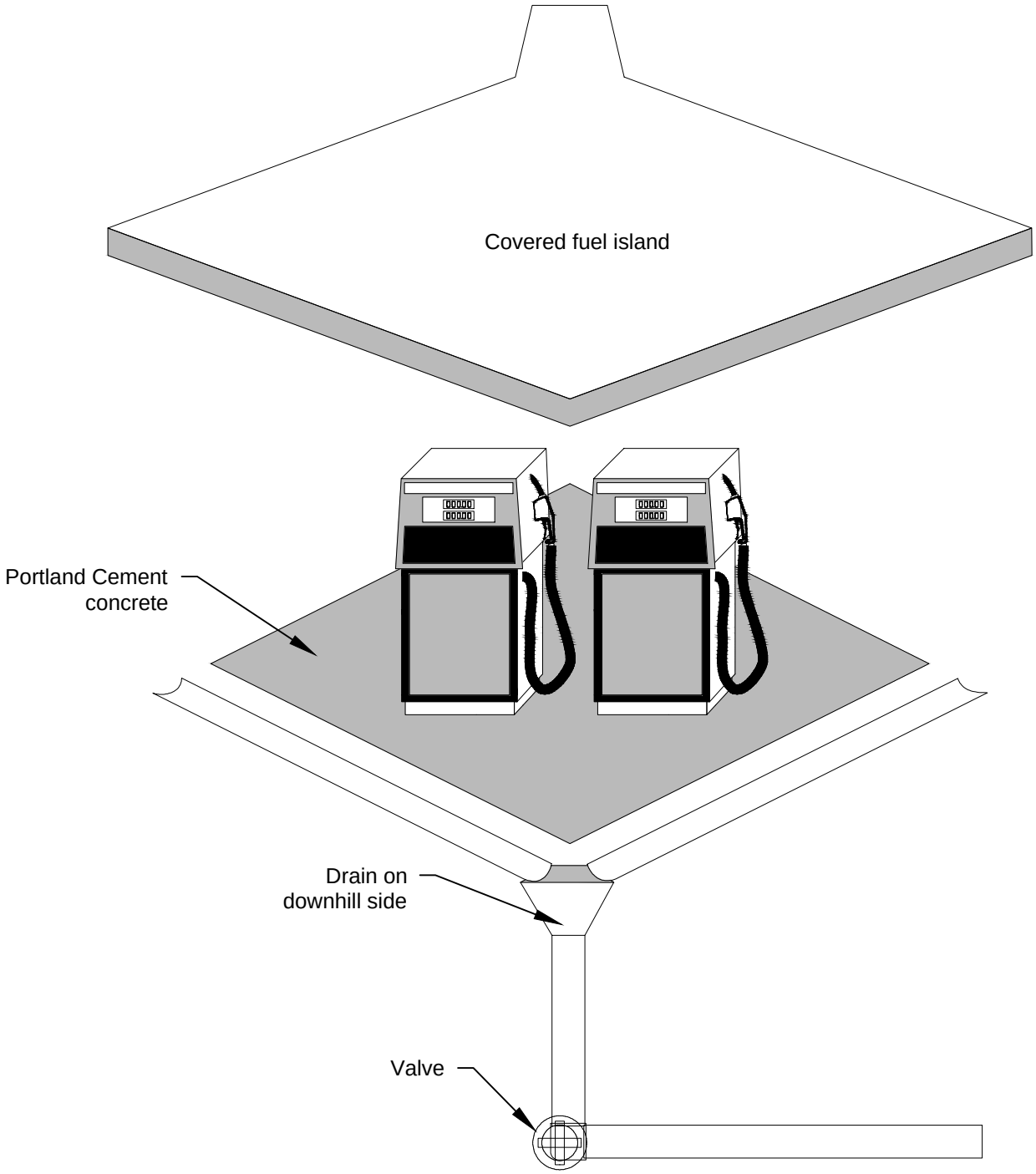

NOT TO SCALE

DEPARTMENT OF ECOLOGY
State of Washington

Figure IV-2.2.1
Covered Fuel Island

Revised December 2015

Please see *http://www.ecy.wa.gov/copyright.html* for copyright notice including permissions, limitation of liability, and disclaimer.

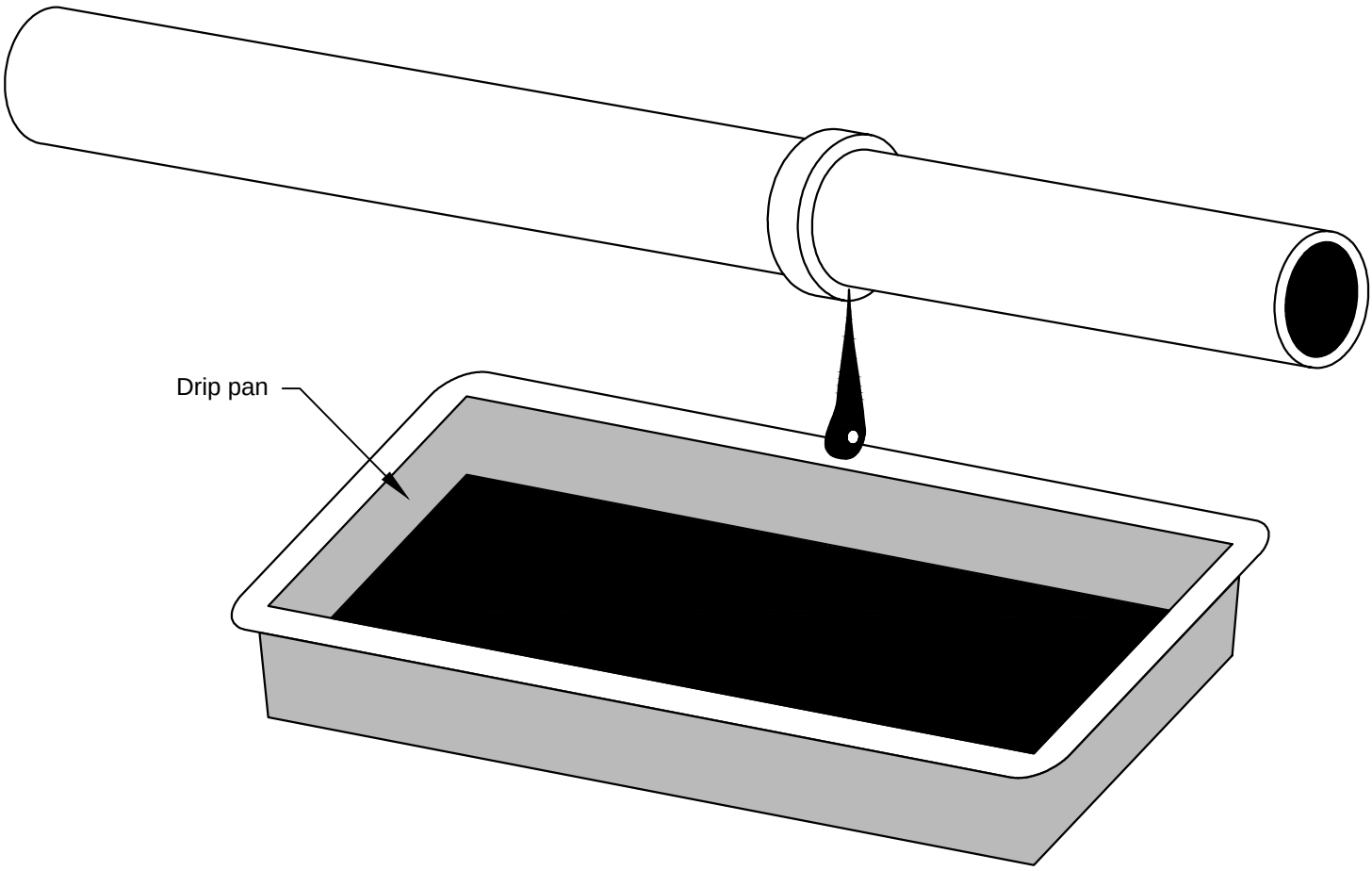

NOT TO SCALE

DEPARTMENT OF
ECOLOGY
State of Washington

Figure IV-2.2.2
Drip Pan

Revised December 2015

Please see *http://www.ecy.wa.gov/copyright.html* for copyright notice including permissions, limitation of liability, and disclaimer.

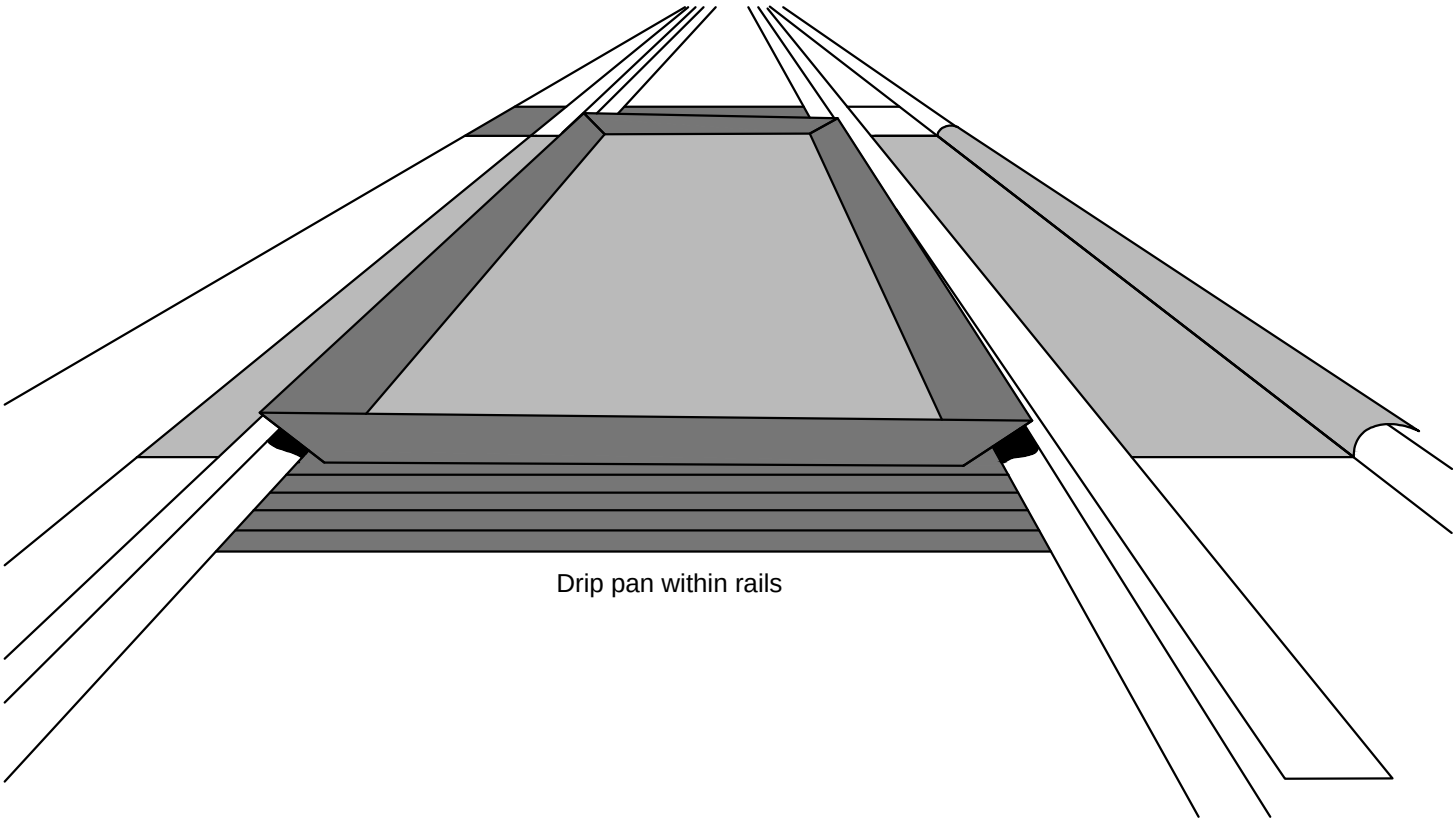

NOT TO SCALE

DEPARTMENT OF
ECOLOGY
State of Washington

Figure IV-2.2.3
Drip Pan Within Rails

Revised December 2015

Please see *http://www.ecy.wa.gov/copyright.html* for copyright notice including permissions, limitation of liability, and disclaimer.

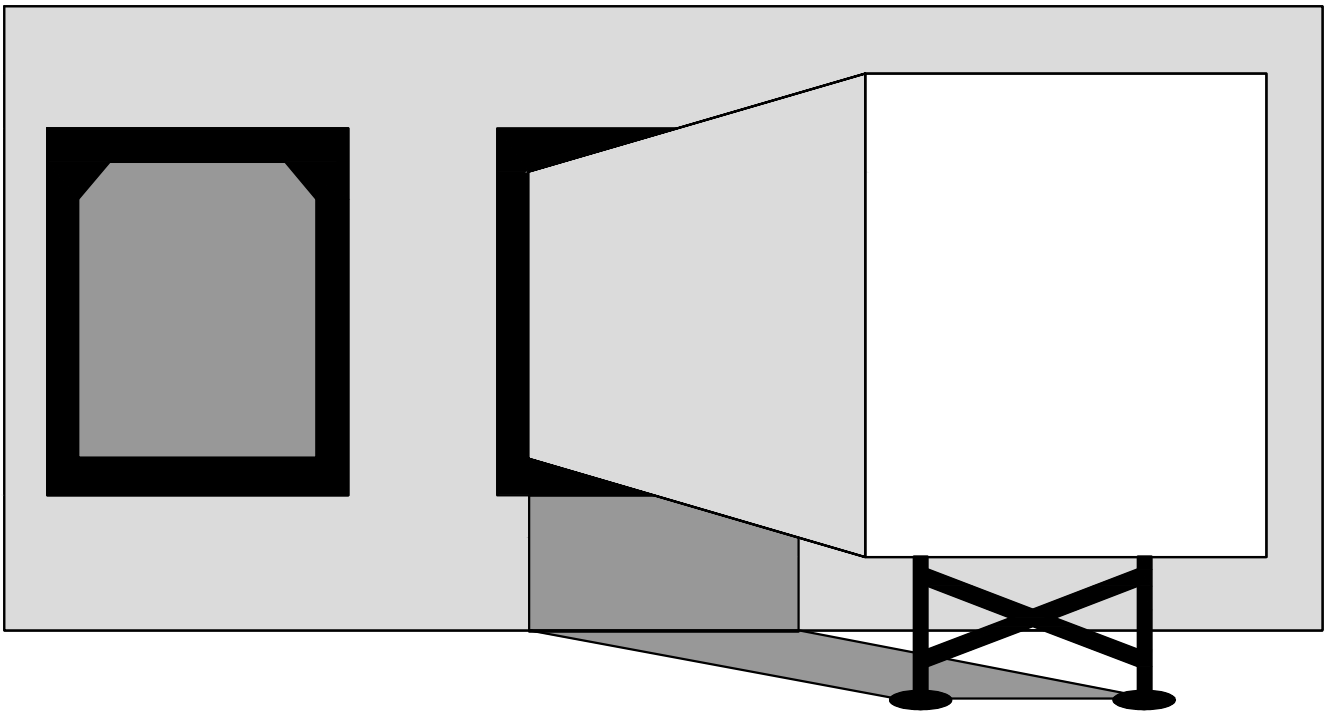

NOT TO SCALE

DEPARTMENT OF
ECOLOGY
State of Washington

Figure IV-2.2.4
Loading Dock with Door Skirt

Revised December 2015

Please see *http://www.ecy.wa.gov/copyright.html* for copyright notice including permissions, limitation of liability, and disclaimer.

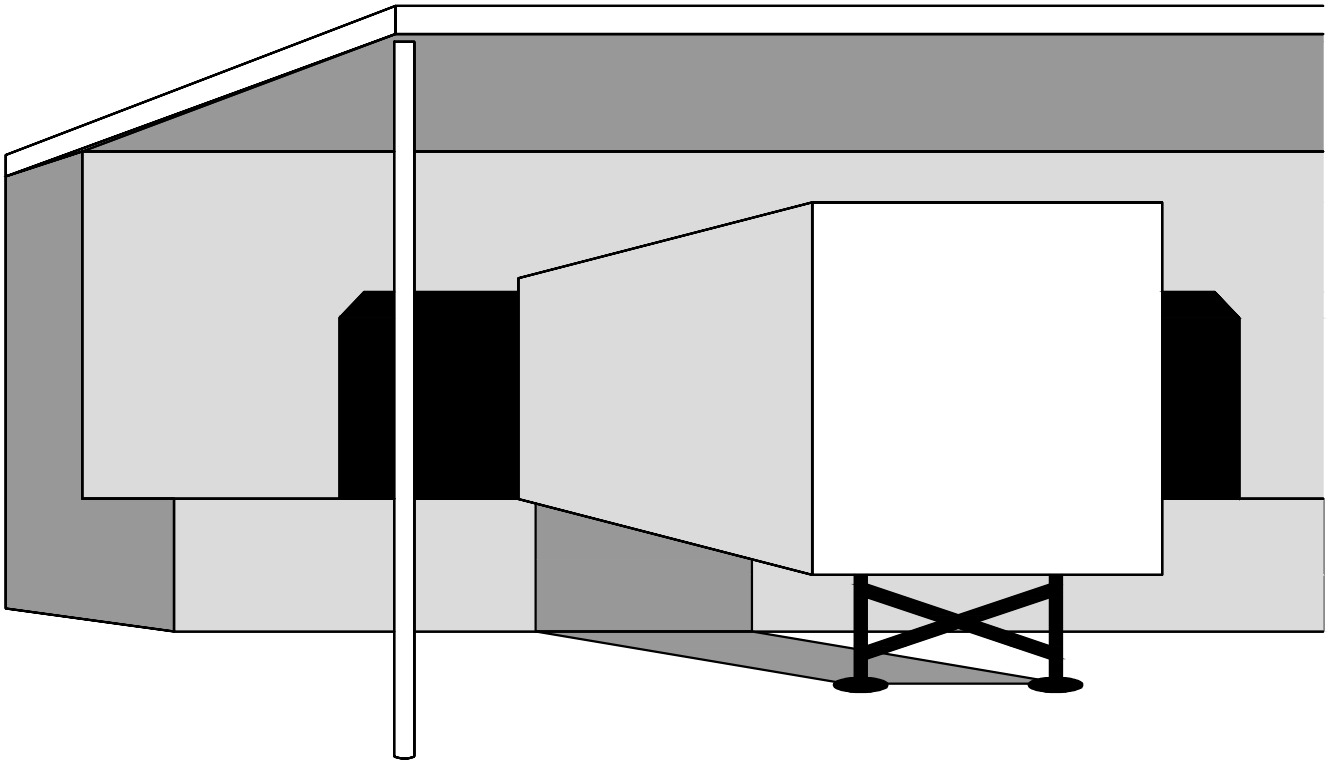

NOT TO SCALE

DEPARTMENT OF
ECOLOGY
State of Washington

Figure IV-2.2.5
Loading Dock with Overhang

Revised December 2015

Please see *http://www.ecy.wa.gov/copyright.html* for copyright notice including permissions, limitation of liability, and disclaimer.

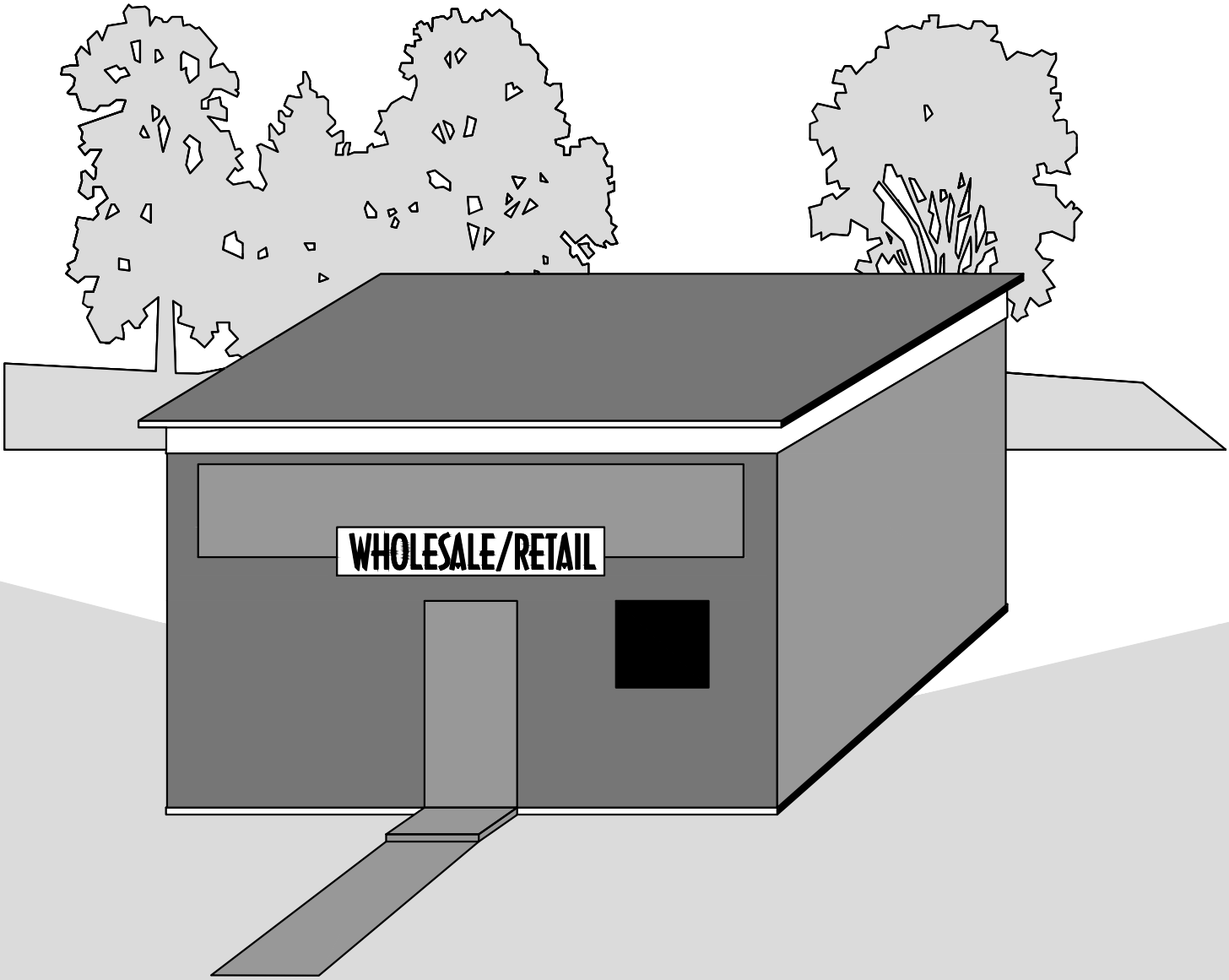

NOT TO SCALE

DEPARTMENT OF
ECOLOGY
State of Washington

Figure IV-2.2.6
Enclose the Activity

Revised December 2015

Please see *http://www.ecy.wa.gov/copyright.html* for copyright notice including permissions, limitation of liability, and disclaimer.

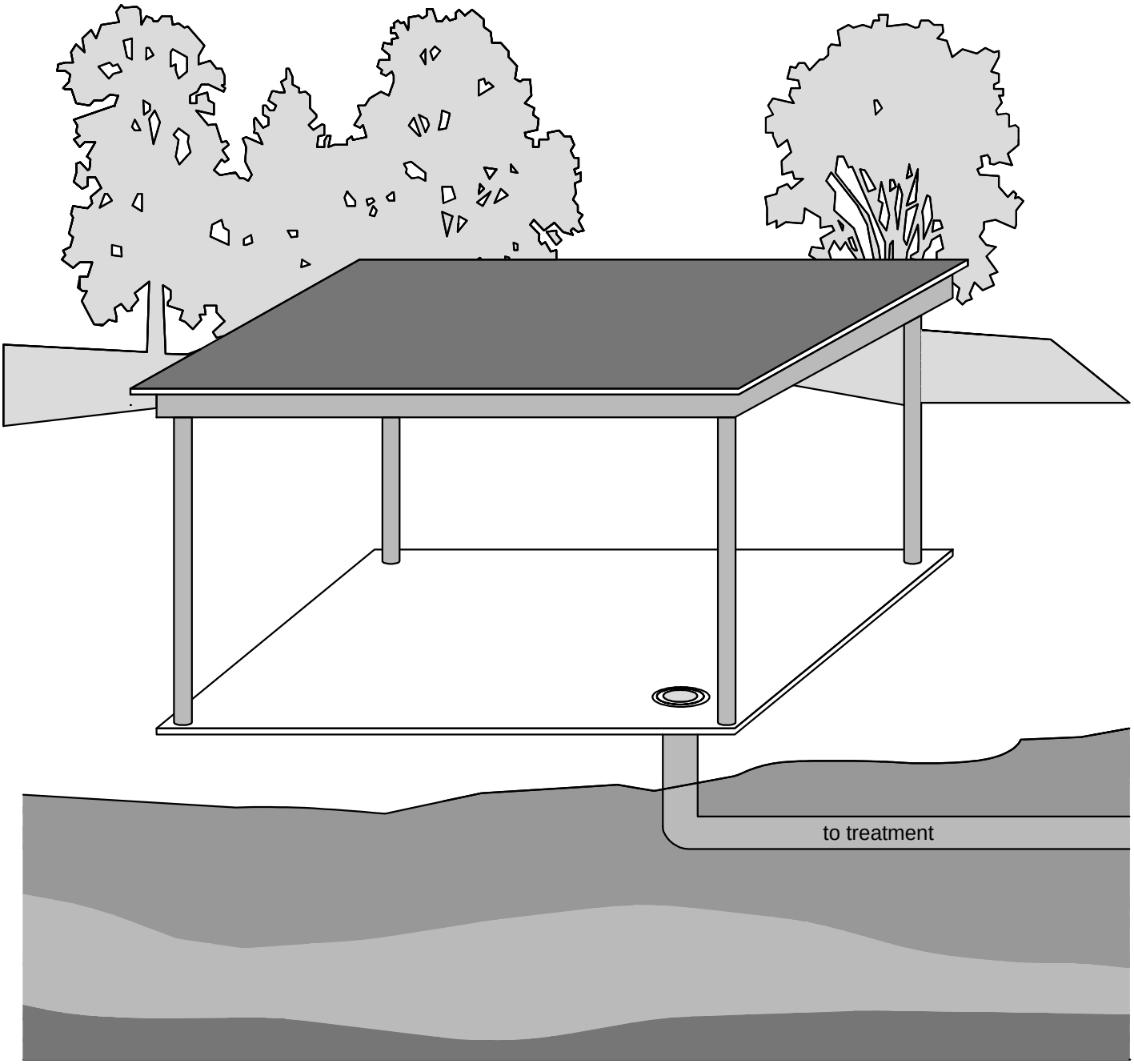

NOT TO SCALE

DEPARTMENT OF
ECOLOGY
State of Washington

Figure IV-2.2.7
Cover the Activity

Revised December 2015

Please see *http://www.ecy.wa.gov/copyright.html* for copyright notice including permissions, limitation of liability, and disclaimer.

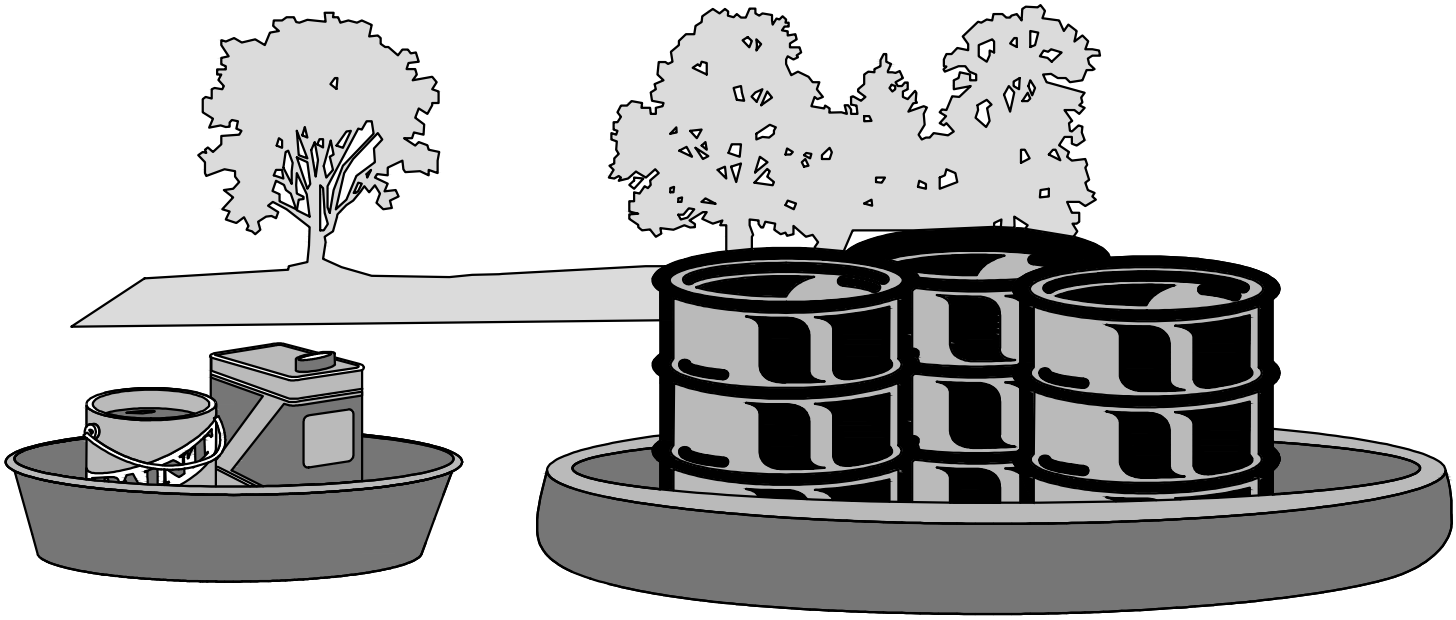

NOT TO SCALE

DEPARTMENT OF
ECOLOGY
State of Washington

Figure IV-2.2.8
Secondary Containment System

Revised December 2015

Please see *http://www.ecy.wa.gov/copyright.html* for copyright notice including permissions, limitation of liability, and disclaimer.

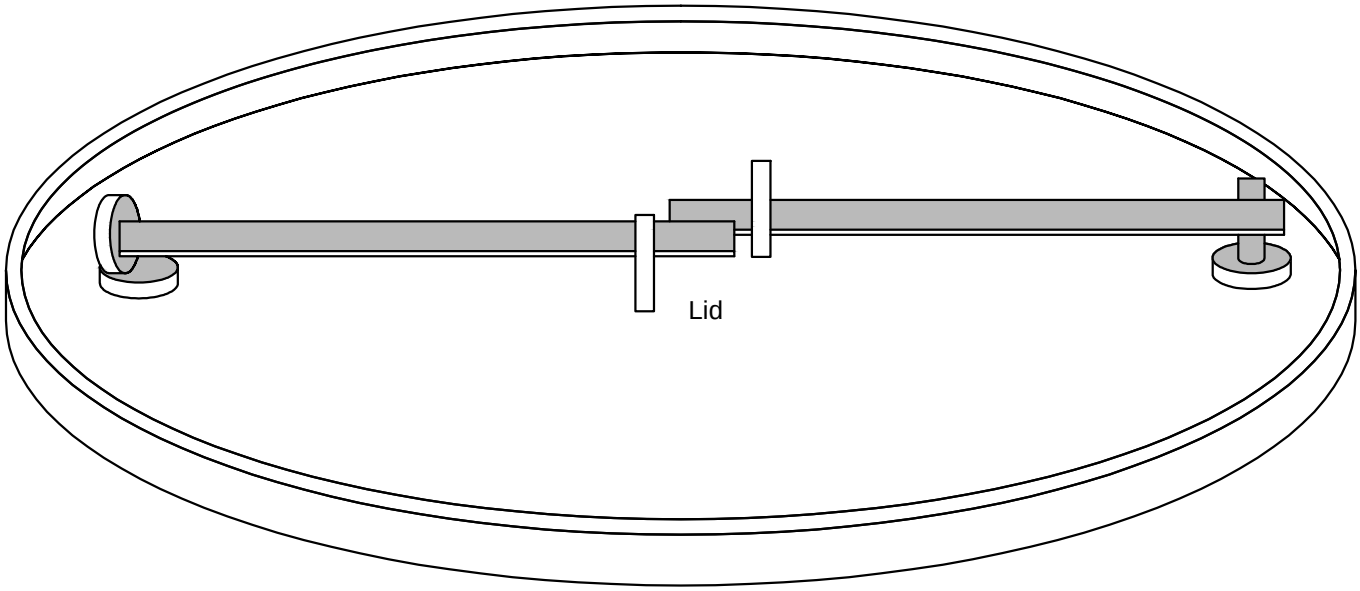

NOT TO SCALE

DEPARTMENT OF
ECOLOGY
State of Washington

Figure IV-2.2.9
Locking System for Drum Lid

Revised December 2015

Please see *http://www.ecy.wa.gov/copyright.html* for copyright notice including permissions, limitation of liability, and disclaimer.

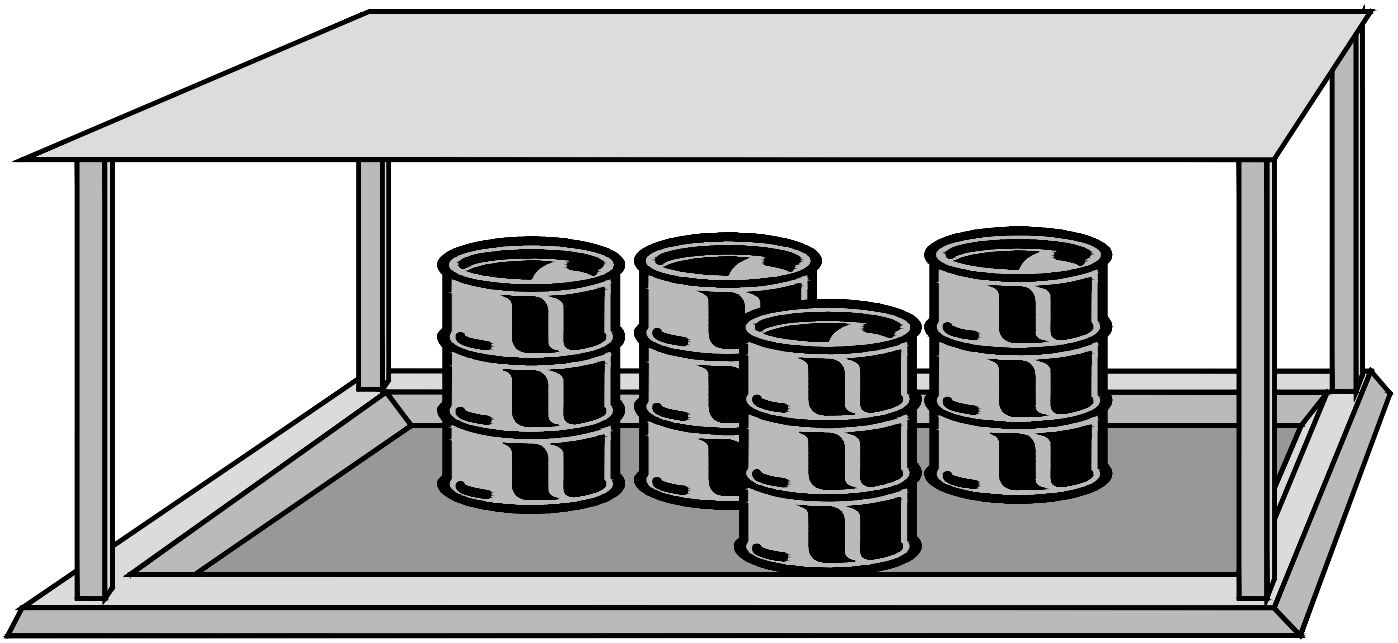

NOT TO SCALE

DEPARTMENT OF
ECOLOGY
State of Washington

Figure IV-2.2.10
Covered and Bermed Containment Area

Revised December 2015

Please see *http://www.ecy.wa.gov/copyright.html* for copyright notice including permissions, limitation of liability, and disclaimer.

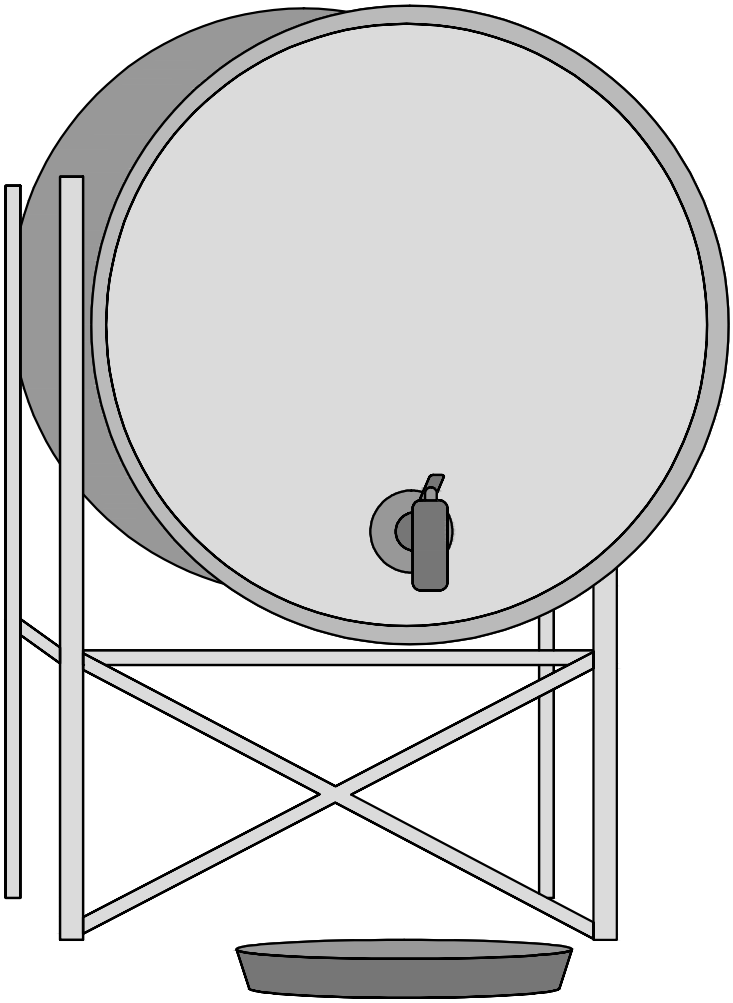

*Note that the secondary containment is not shown in this figure

NOT TO SCALE

DEPARTMENT OF
ECOLOGY
State of Washington

Figure IV-2.2.11
Mounted Container - with Drip Pan

Revised December 2015

Please see *http://www.ecy.wa.gov/copyright.html* for copyright notice including permissions, limitation of liability, and disclaimer.

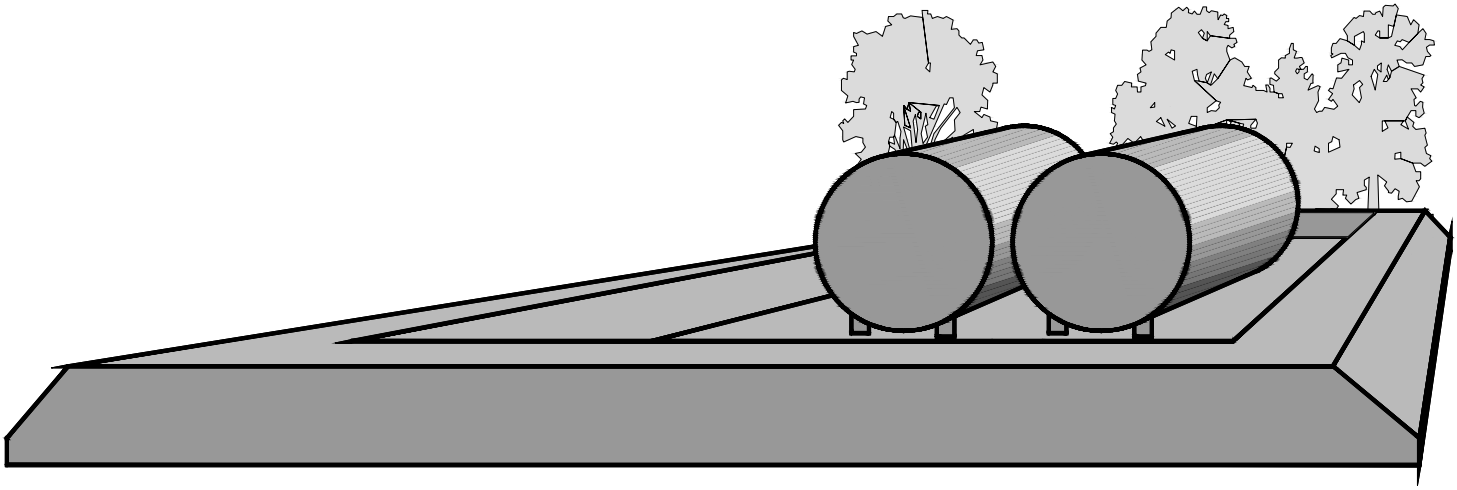

NOT TO SCALE

DEPARTMENT OF
ECOLOGY
State of Washington

Figure IV-2.2.12
Above-Ground Tank Storage

Revised December 2015

Please see *http://www.ecy.wa.gov/copyright.html* for copyright notice including permissions, limitation of liability, and disclaimer.

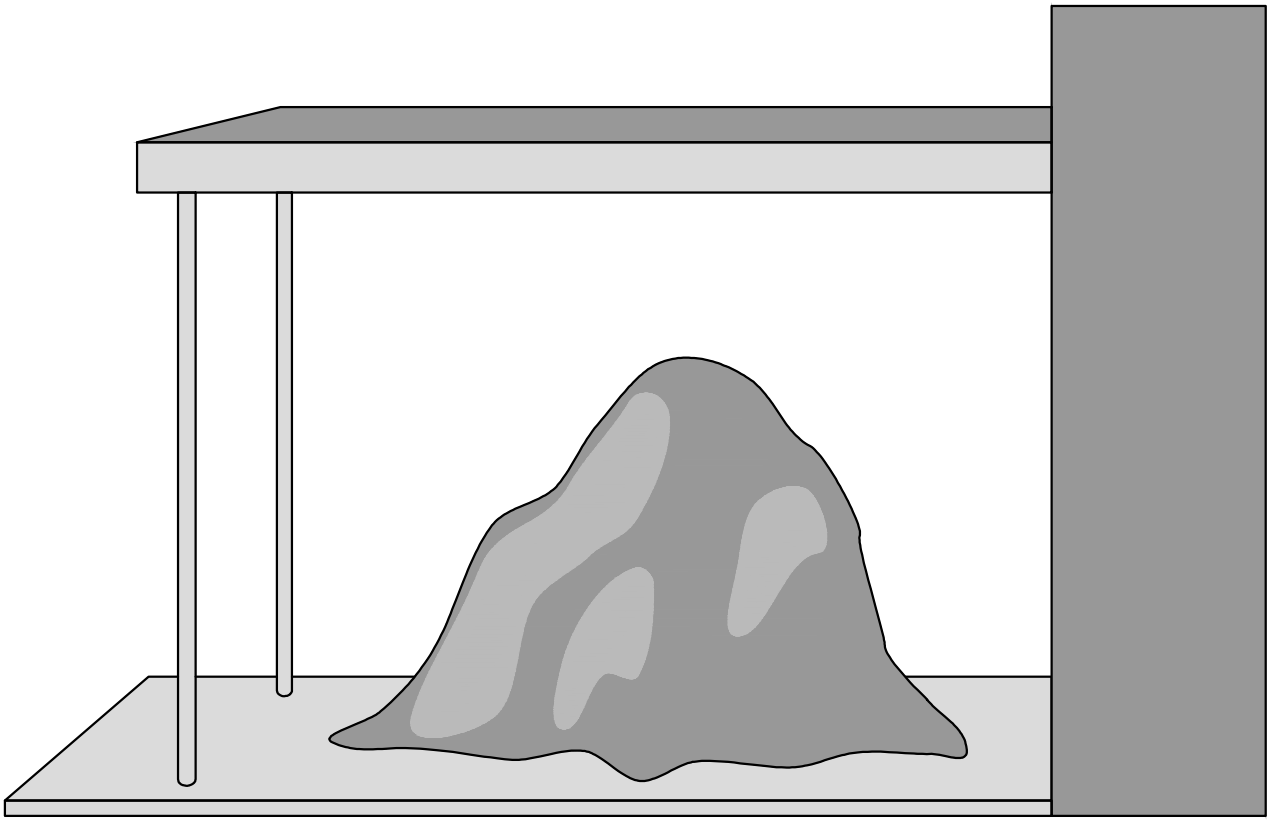

NOT TO SCALE

DEPARTMENT OF
ECOLOGY
State of Washington

Figure IV-2.2.13
Covered Storage Area for Bulk Solids
(include berm if needed)

Revised December 2015

Please see *http://www.ecy.wa.gov/copyright.html* for copyright notice including permissions, limitation of liability, and disclaimer.

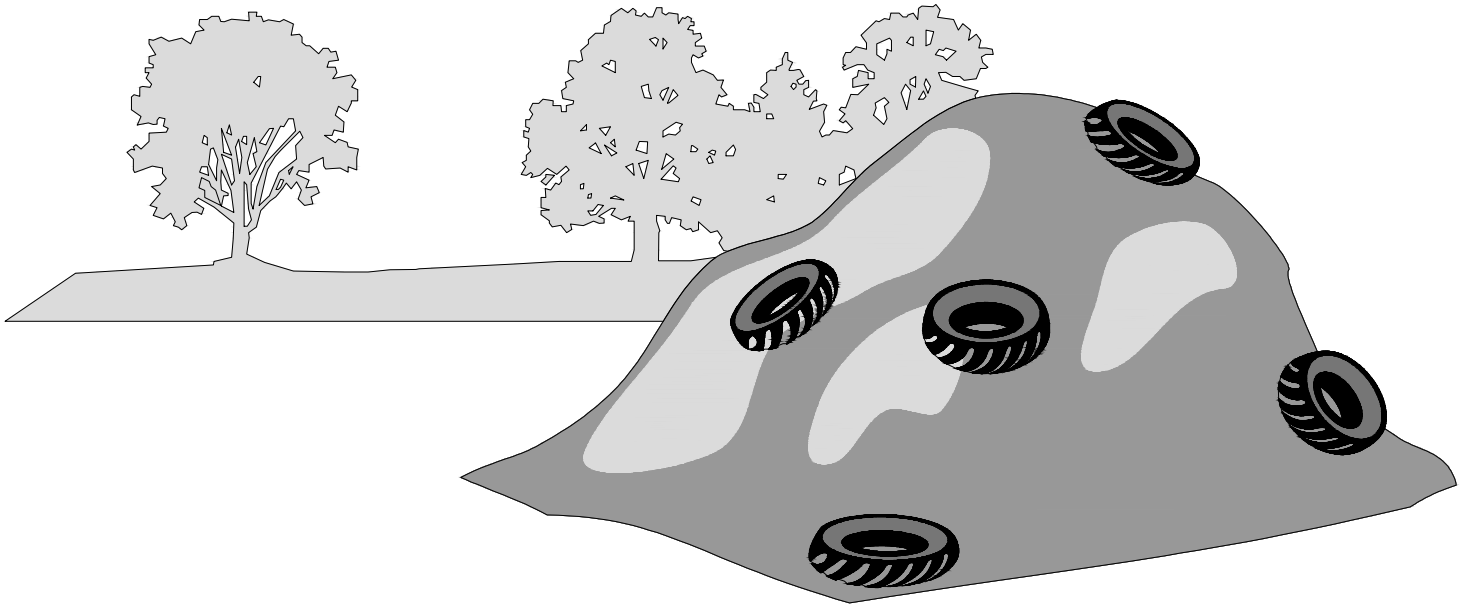

NOT TO SCALE

DEPARTMENT OF
ECOLOGY
State of Washington

Figure IV-2.2.14
Material Covered with Plastic Sheeting

Revised December 2015

Please see *http://www.ecy.wa.gov/copyright.html* for copyright notice including permissions, limitation of liability, and disclaimer.

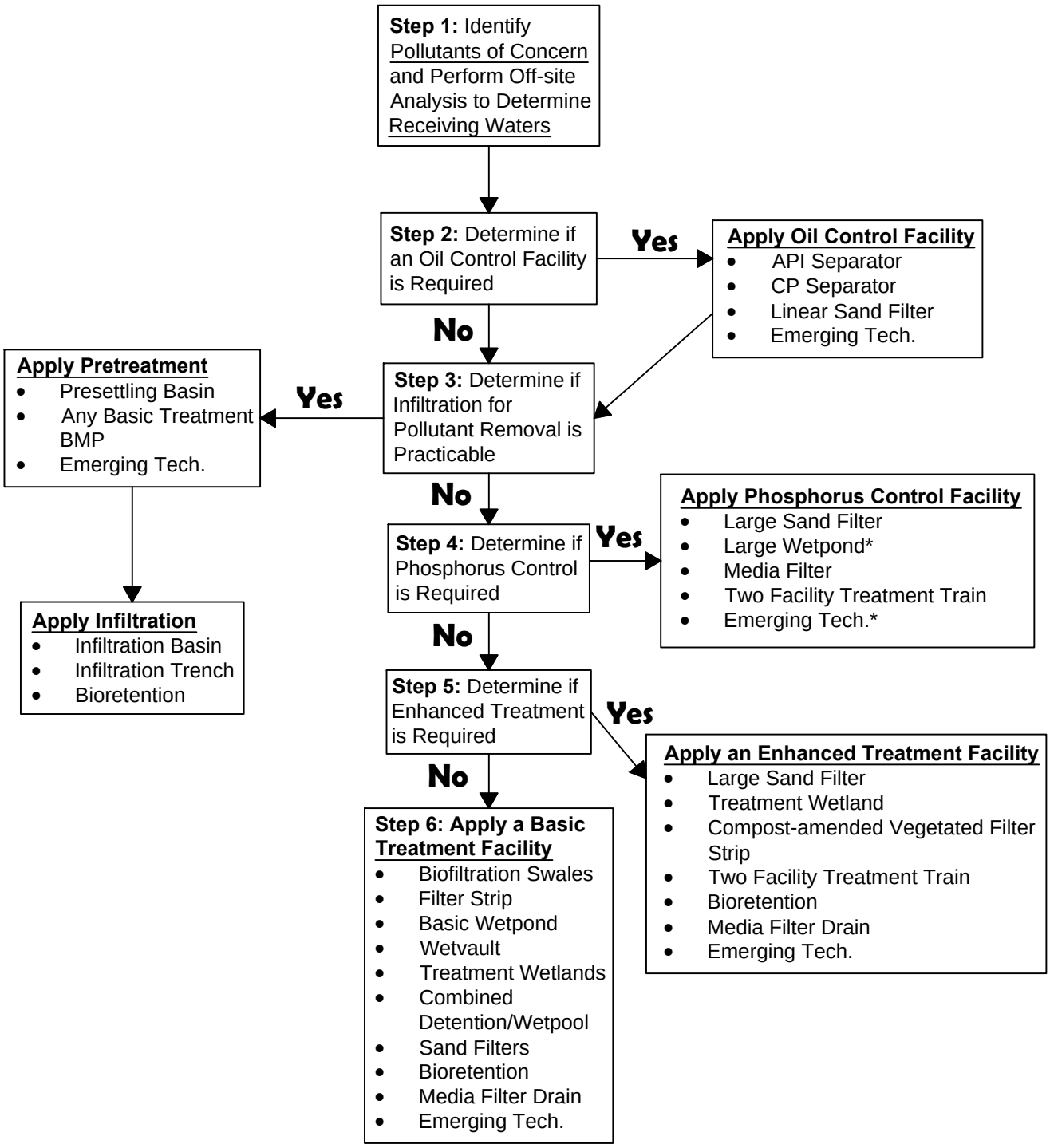

*When **Phosphorus Control and Enhanced** treatment are required, the Large Wetpond and certain types of emerging technologies will not meet both types of treatment requirements. A different or an additional treatment facility will be required to meet Enhanced treatment.

DEPARTMENT OF ECOLOGY
State of Washington

Figure V-2.1.1
Treatment Facility Selection Flow Chart

Revised December 2015

Please see *http://www.ecy.wa.gov/copyright.html* for copyright notice including permissions, limitation of liability, and disclaimer.

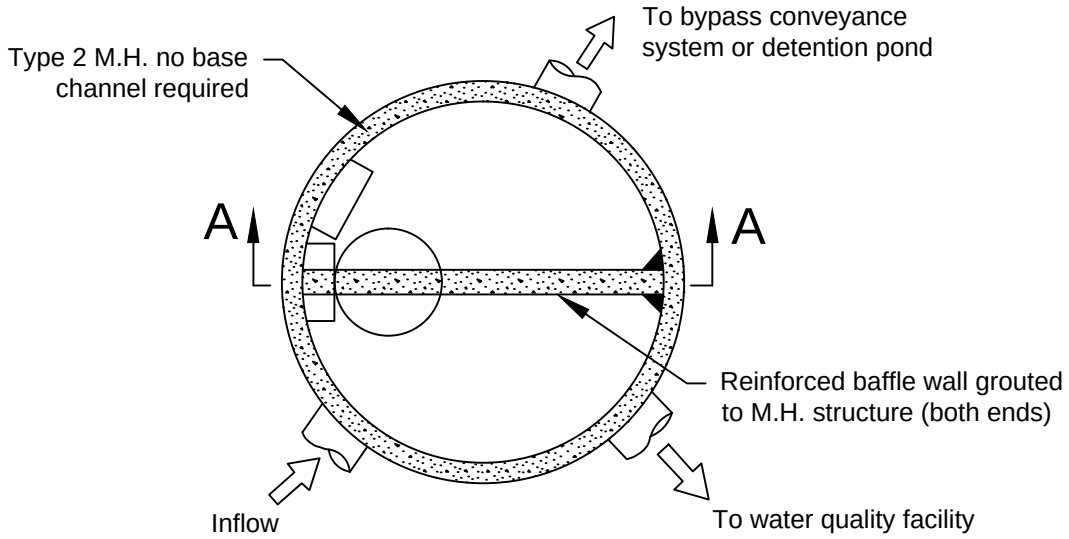

Plan View

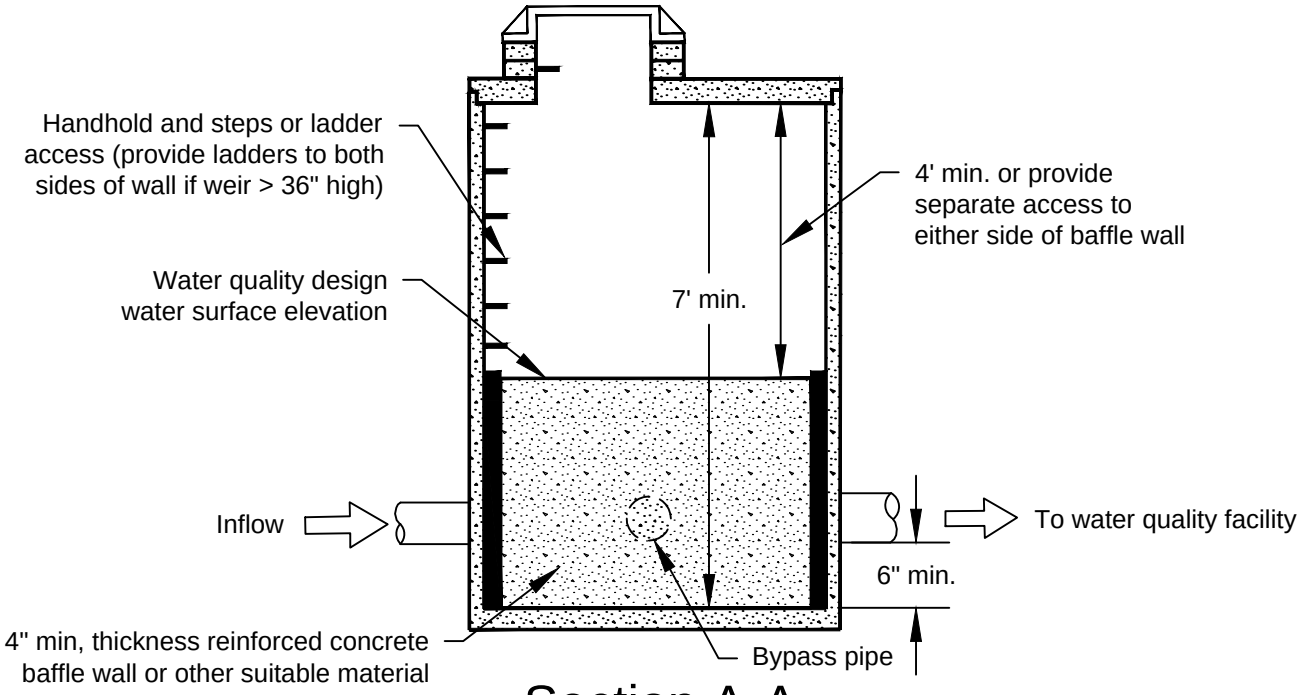

Section A-A

Note: The water quality discharge pipe may require an orifice plate to be installed on the outlet to control the height of the design water surface (weir height). The design water surface should be set to provide a minimum headwater/diameter ratio of 2.0 on the outlet pipe.

NOT TO SCALE

DEPARTMENT OF ECOLOGY State of Washington

Figure V-4.5.1
Flow Splitter, Option A

Revised January 2016

Please see *http://www.ecy.wa.gov/copyright.html* for copyright notice including permissions, limitation of liability, and disclaimer.

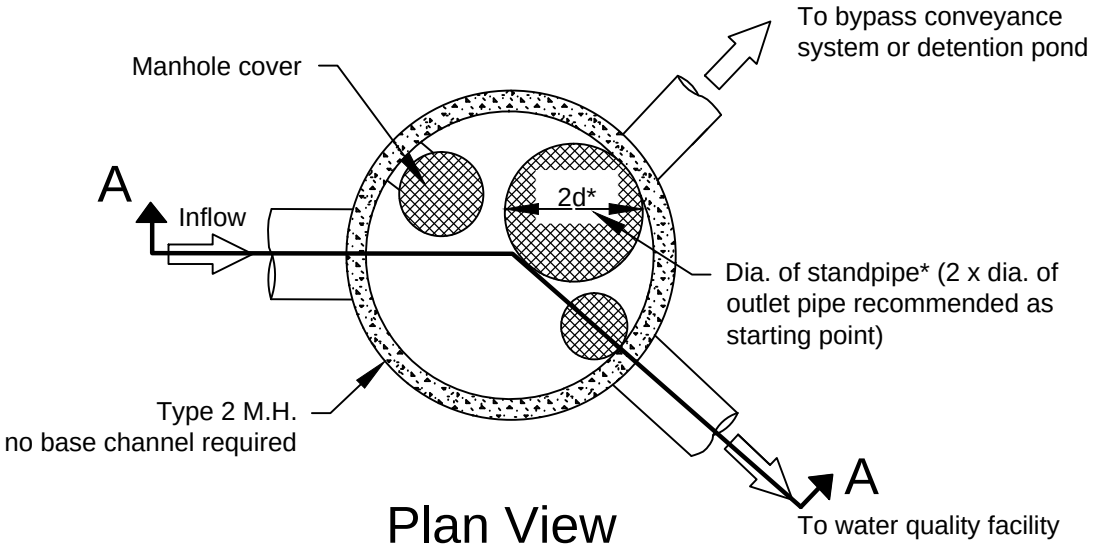

Plan View

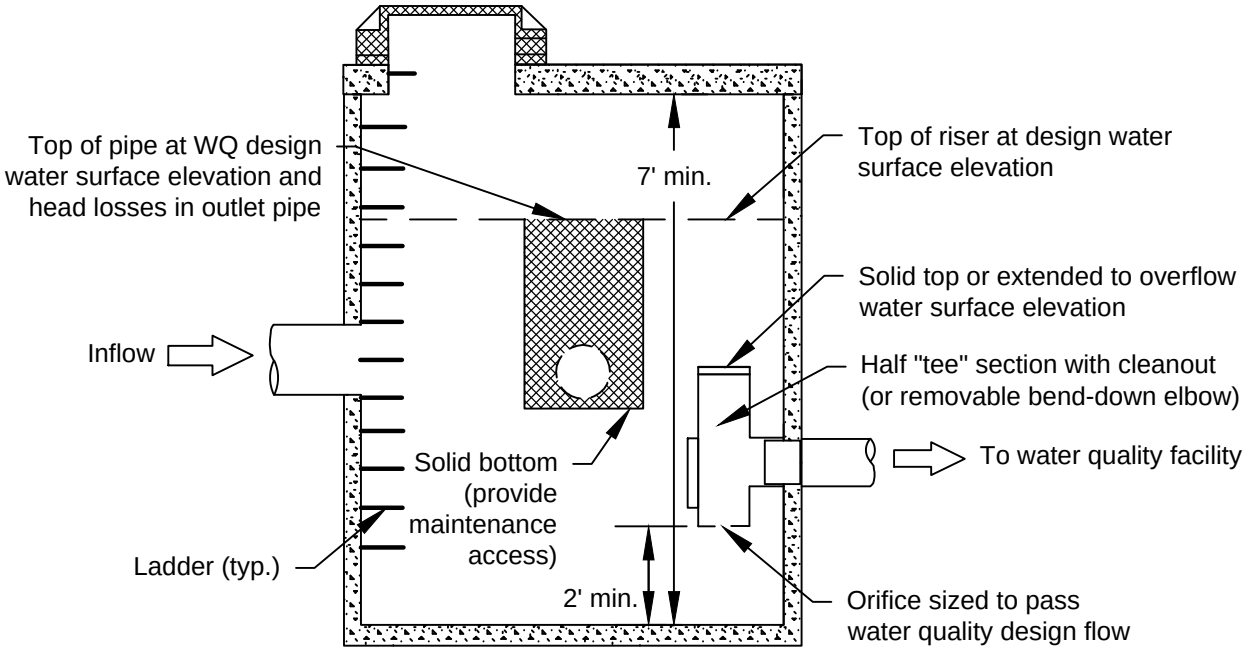

Section A-A

*Note: Diamter (d) of standpipe should be large enough to minimize head above water quality design water surface and to keep water quality design flows from increasing more than 10% during 100-year flows.

NOT TO SCALE

DEPARTMENT OF ECOLOGY
State of Washington

Figure V-4.5.2
Flow Splitter, Option B

Revised January 2016

Please see *http://www.ecy.wa.gov/copyright.html* for copyright notice including permissions, limitation of liability, and disclaimer.

Example of anchored plate used with a sand filter* (may also be used with other water quality facilities).

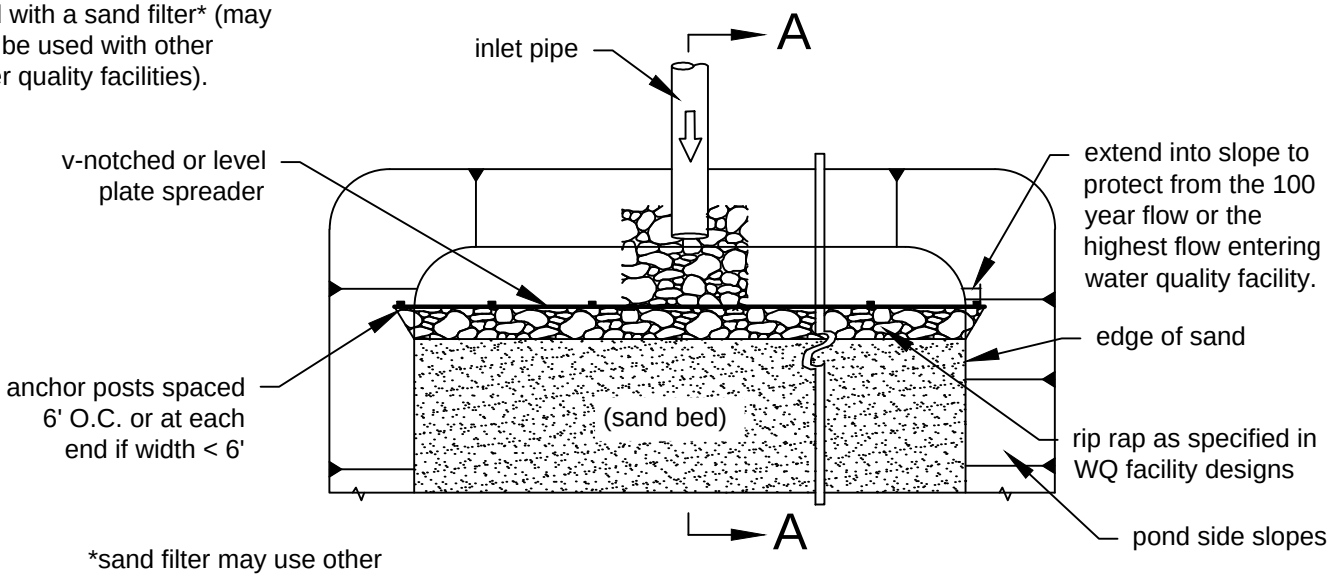

*sand filter may use other spreading options

Plan View

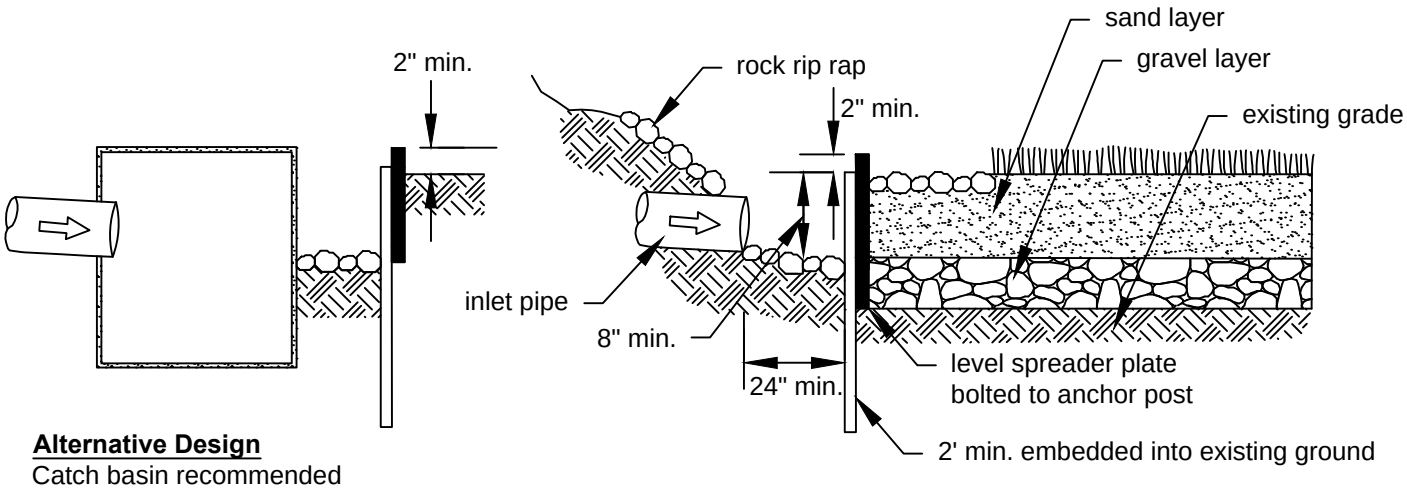

Alternative Design
Catch basin recommended for higher flow situations (generally for inflow velocities of 5 fps or greater for 100 year storm).

Section A-A

NOT TO SCALE

DEPARTMENT OF ECOLOGY
State of Washington

Figure V-4.5.3
Flow Spreader Option A: Anchored Plate

Revised January 2016

Please see *http://www.ecy.wa.gov/copyright.html* for copyright notice including permissions, limitation of liability, and disclaimer.

Example of a concrete sump flow spreader used with a biofiltration swale (may be used with other WQ facilities).

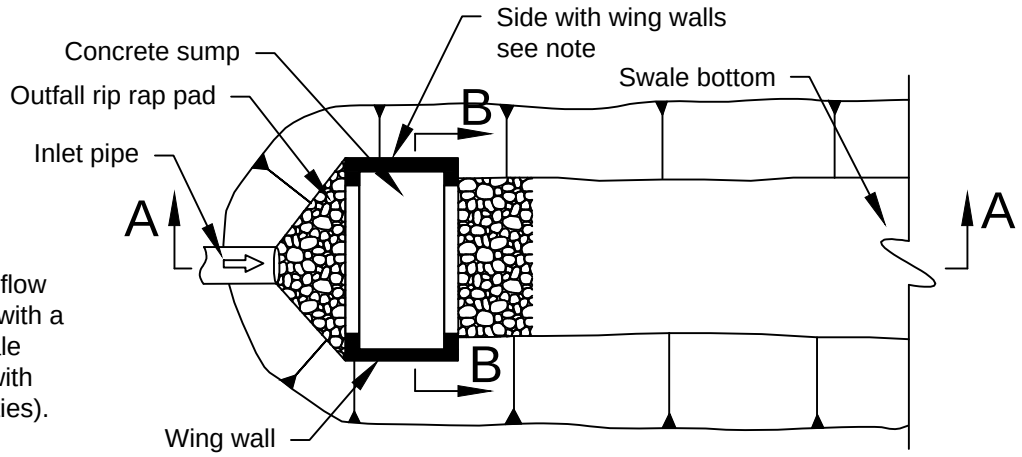

Plan View

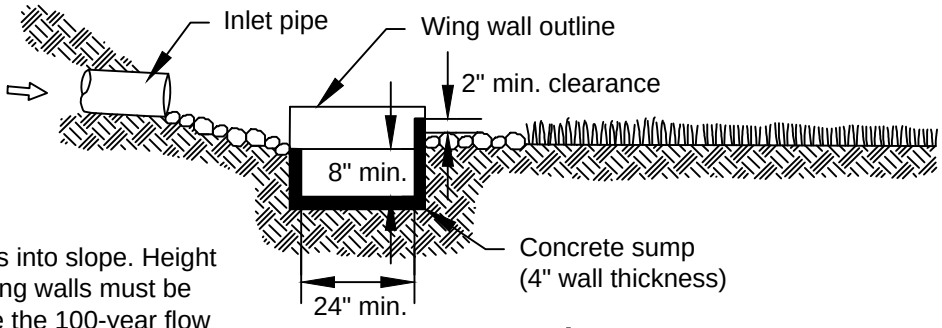

Note: Extend sides into slope. Height of side wall and wing walls must be sufficient to handle the 100-year flow or the highest flow entering the facility.

Section A-A

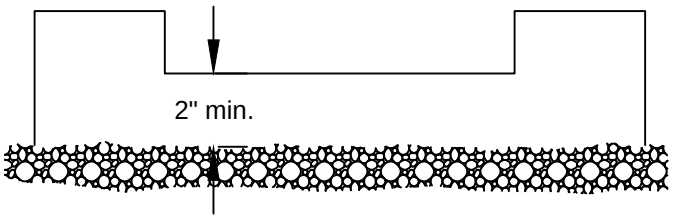

Section B-B

NOT TO SCALE

DEPARTMENT OF ECOLOGY State of Washington

Figure V-4.5.4
Flow Spreader Option B: Concrete Sump Box

Revised January 2016

Please see *http://www.ecy.wa.gov/copyright.html* for copyright notice including permissions, limitation of liability, and disclaimer.

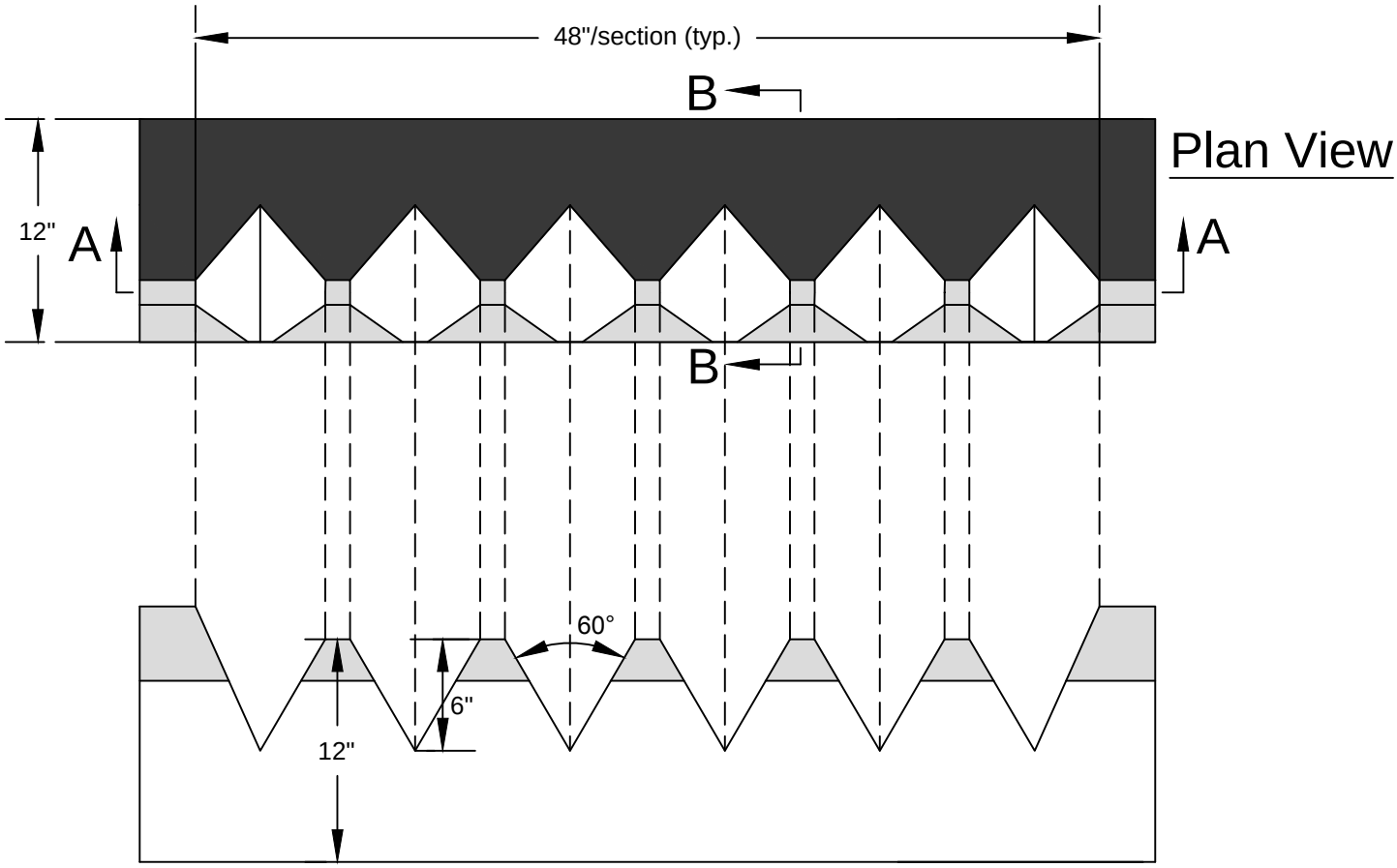

Front View A-A

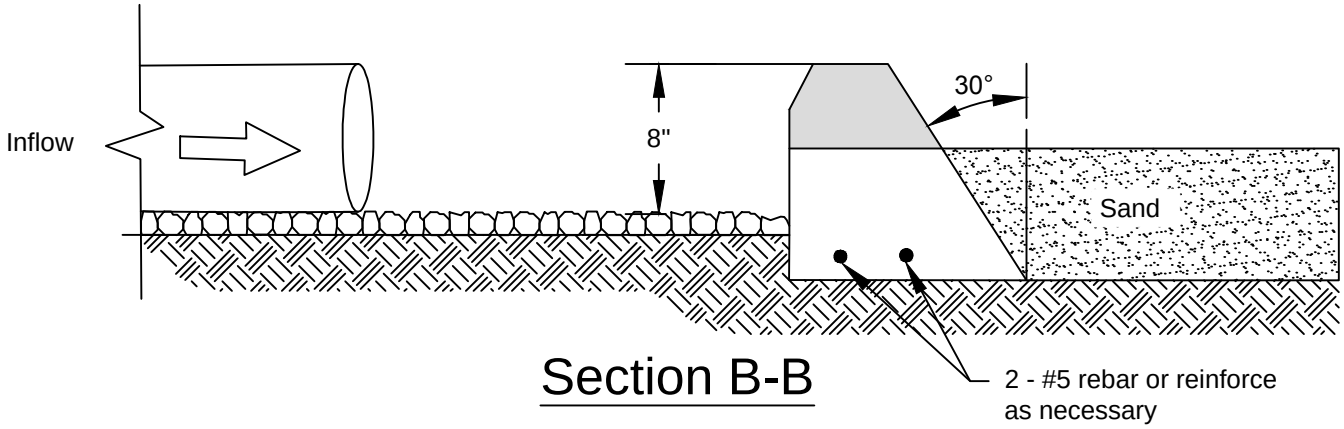

Section B-B

NOT TO SCALE

DEPARTMENT OF
ECOLOGY
State of Washington

Figure V-4.5.5
Flow Spreader Option C: Notched Curb Spreader

Revised January 2016

Please see *http://www.ecy.wa.gov/copyright.html* for copyright notice including permissions, limitation of liability, and disclaimer.

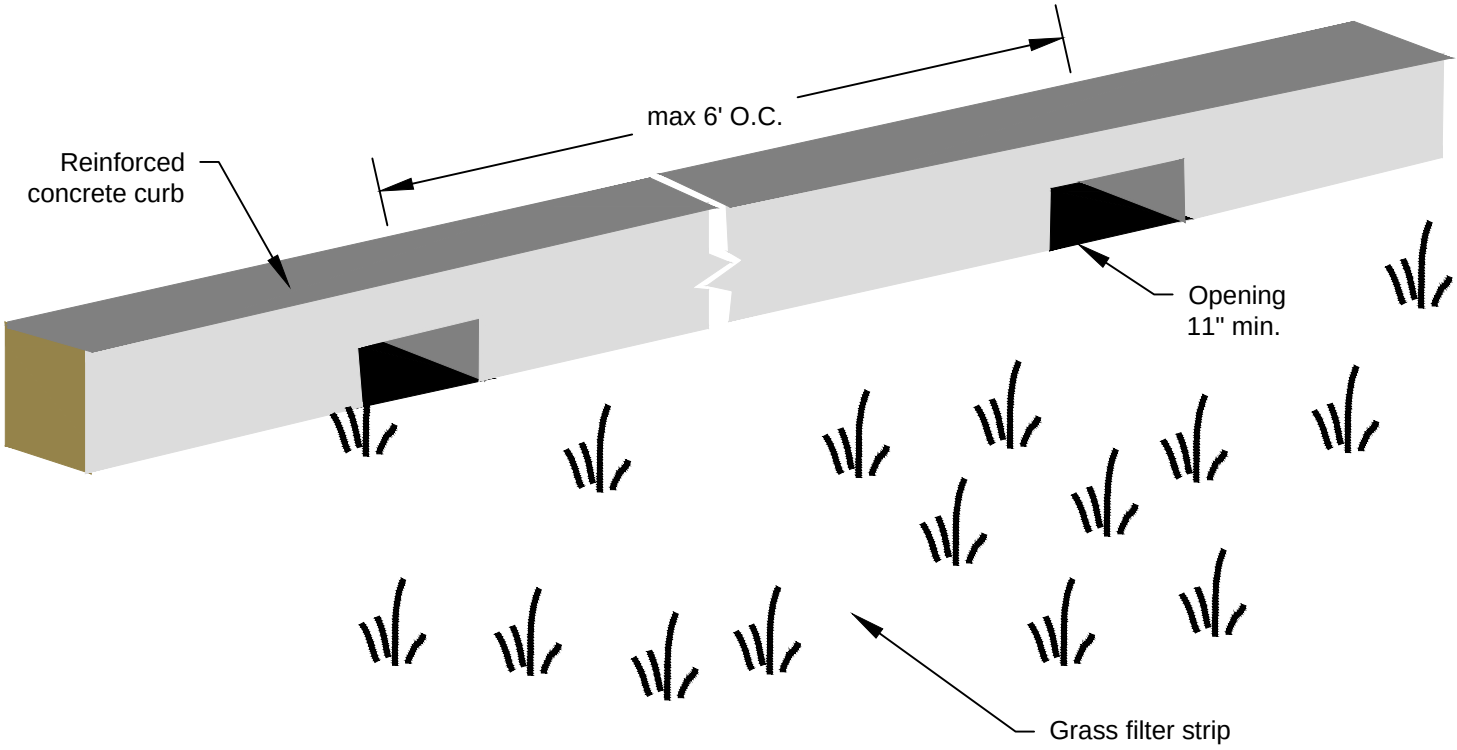

Curb Port

NOT TO SCALE

DEPARTMENT OF ECOLOGY
State of Washington

Figure V-4.5.6
Flow Spreader Option D: Through-Curb Port

Revised January 2016

Please see *http://www.ecy.wa.gov/copyright.html* for copyright notice including permissions, limitation of liability, and disclaimer.

Required Dimensions	
"A" + "B"	8' for rock lining
	12' for rip rap
See Table 4.5	

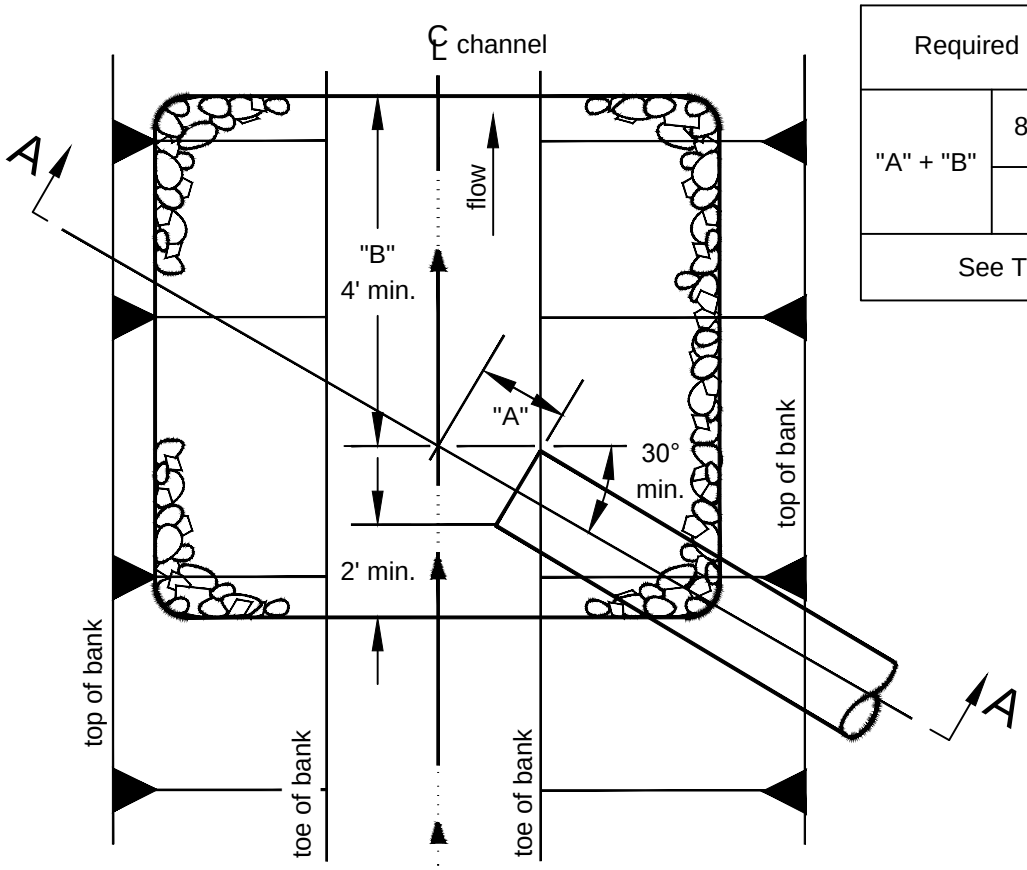

Plan

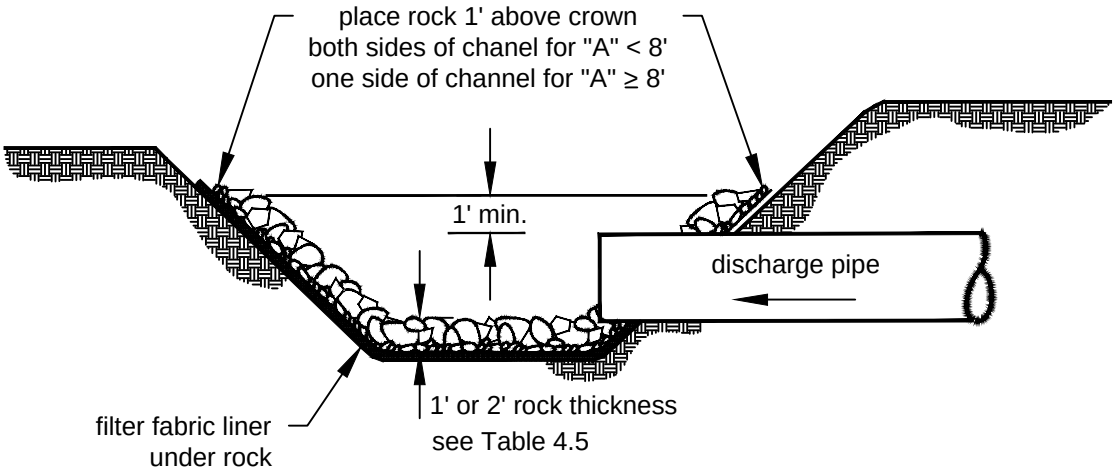

Section A-A

NOT TO SCALE

DEPARTMENT OF
ECOLOGY
State of Washington

Figure V-4.5.7
Pipe/Culvert Outfall Discharge Protection

Revised January 2016

Please see *http://www.ecy.wa.gov/copyright.html* for copyright notice including permissions, limitation of liability, and disclaimer.

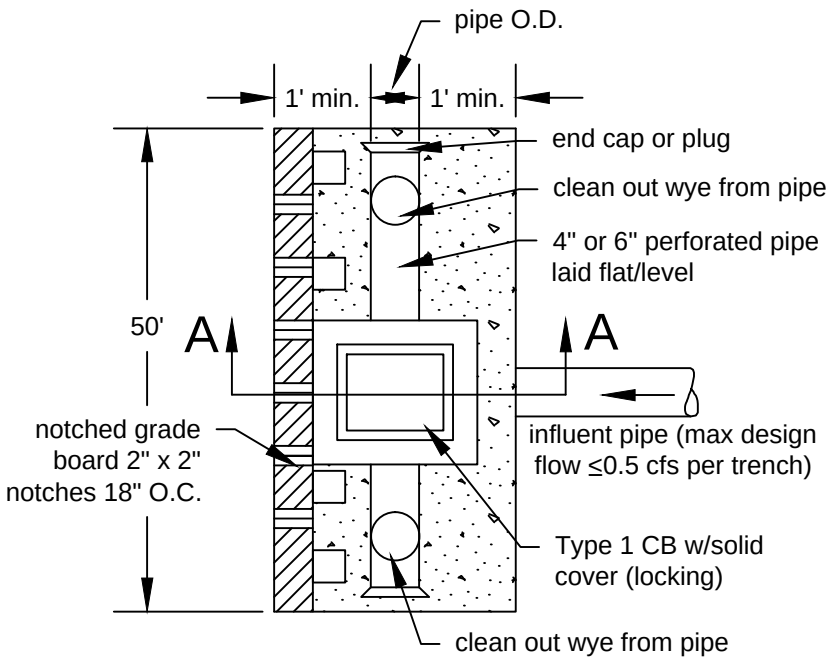

Plan

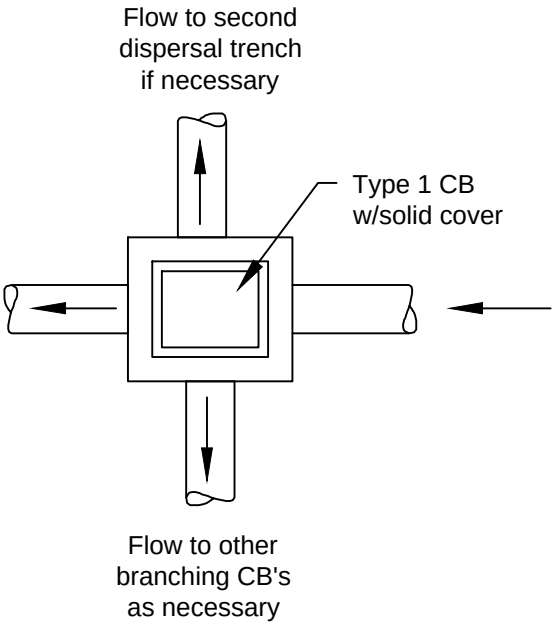

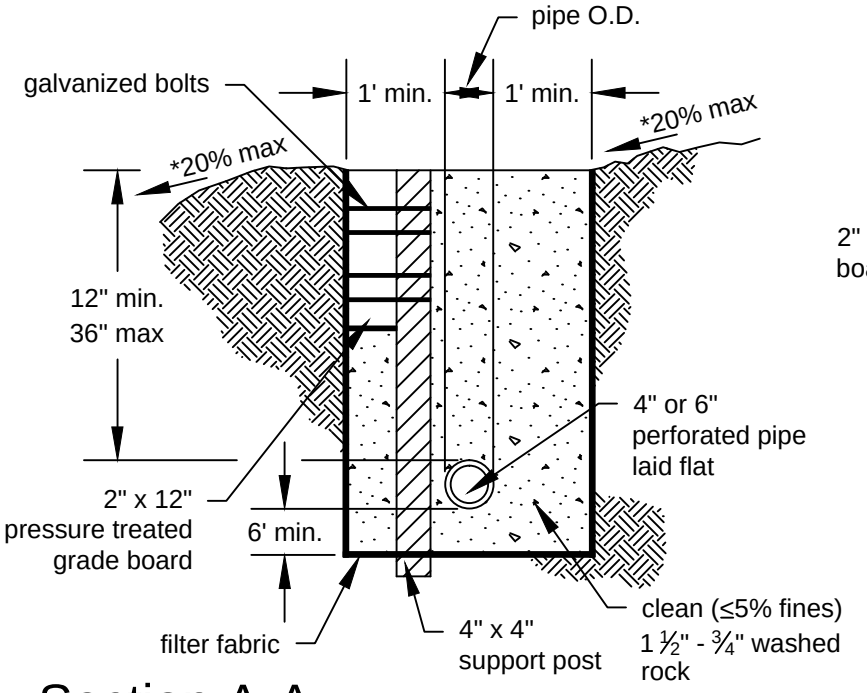

Section A-A

*15% max for flow control/water quality treatment in rural areas.

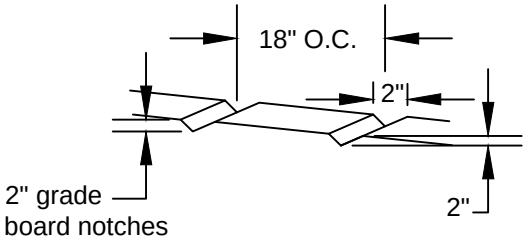

Notes:

1. This trench shall be constructed so as to prevent point discharge and/or erosion.
2. Trenches may be placed no closer than 50 feet to one another. (100 feet along flowline)
3. Trench and grade board must be level. Align to follow contours of site.
4. Support post spacing as required by soil conditions to ensure grade board remains level.

NOT TO SCALE

DEPARTMENT OF ECOLOGY
State of Washington

Figure V-4.5.8
Flow Dispersal Trench

Revised January 2016

Please see *http://www.ecy.wa.gov/copyright.html* for copyright notice including permissions, limitation of liability, and disclaimer.

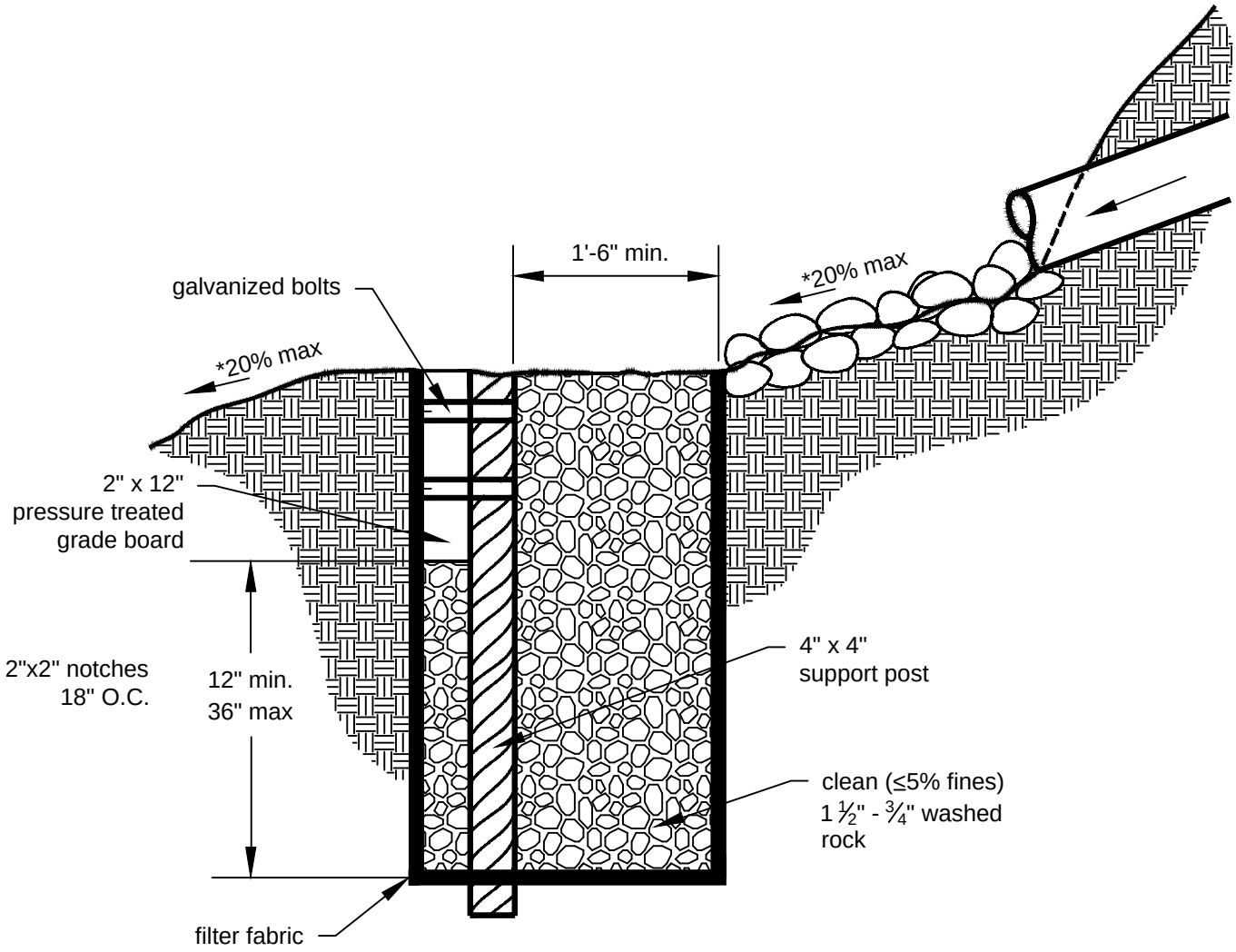

*15% max for flow control/water quality treatment in rural areas.

Section A-A

Notes:

1. This trench shall be constructed so as to prevent point discharge and/or erosion.
2. Trenches may be placed no closer than 50 feet to one another. (100 feet along flowline)
3. Trench and grade board must be level. Align to follow contours of site.
4. Support post spacing as required by soil conditions to ensure grade board remains level.

NOT TO SCALE

DEPARTMENT OF
ECOLOGY
State of Washington

Figure V-4.5.9
Alternative Flow Dispersal Trench

Revised January 2016

Please see *http://www.ecy.wa.gov/copyright.html* for copyright notice including permissions, limitation of liability, and disclaimer.

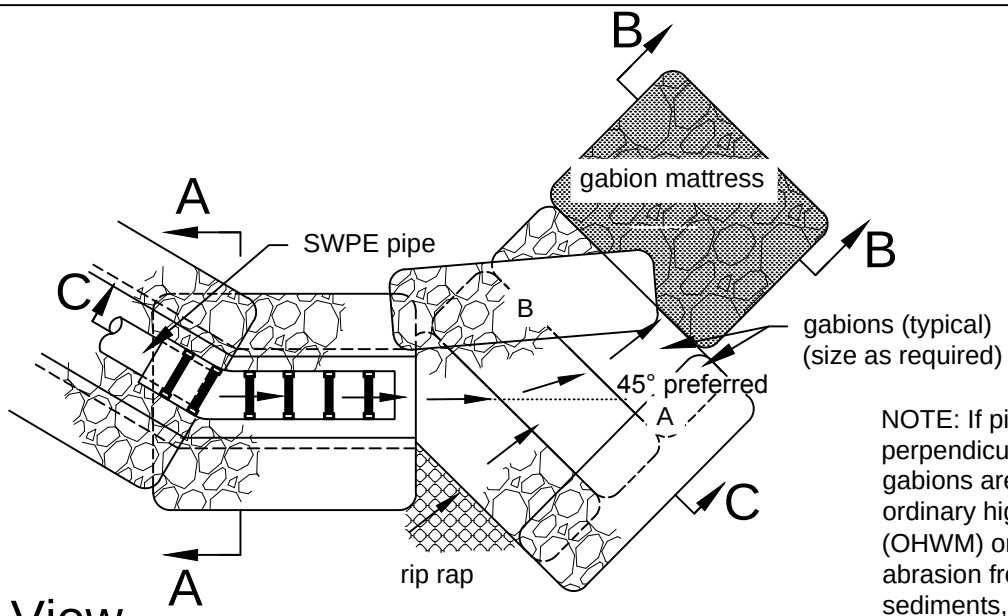

Plan View

NOTE: If pipe discharges perpendicular to stream, or gabions are located within the ordinary high water mark (OHWM) or will be subject to abrasion from upstream sediments, a four-sided gabion basket located outside the OHWM should be considered.

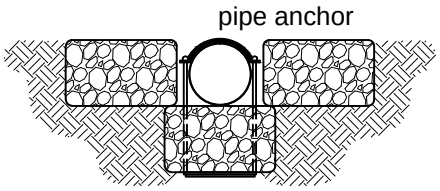

Section A-A

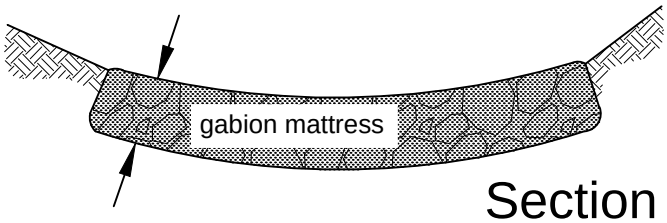

Section B-B

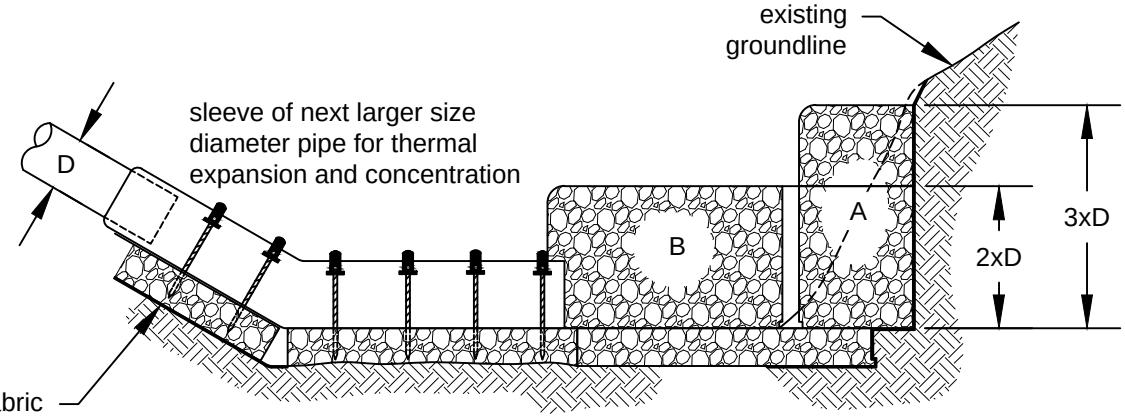

Section C-C

NOT TO SCALE

DEPARTMENT OF
ECOLOGY
State of Washington

Figure V-4.5.10
Gabion Outfall Detail

Revised January 2016

Please see *http://www.ecy.wa.gov/copyright.html* for copyright notice including permissions, limitation of liability, and disclaimer.

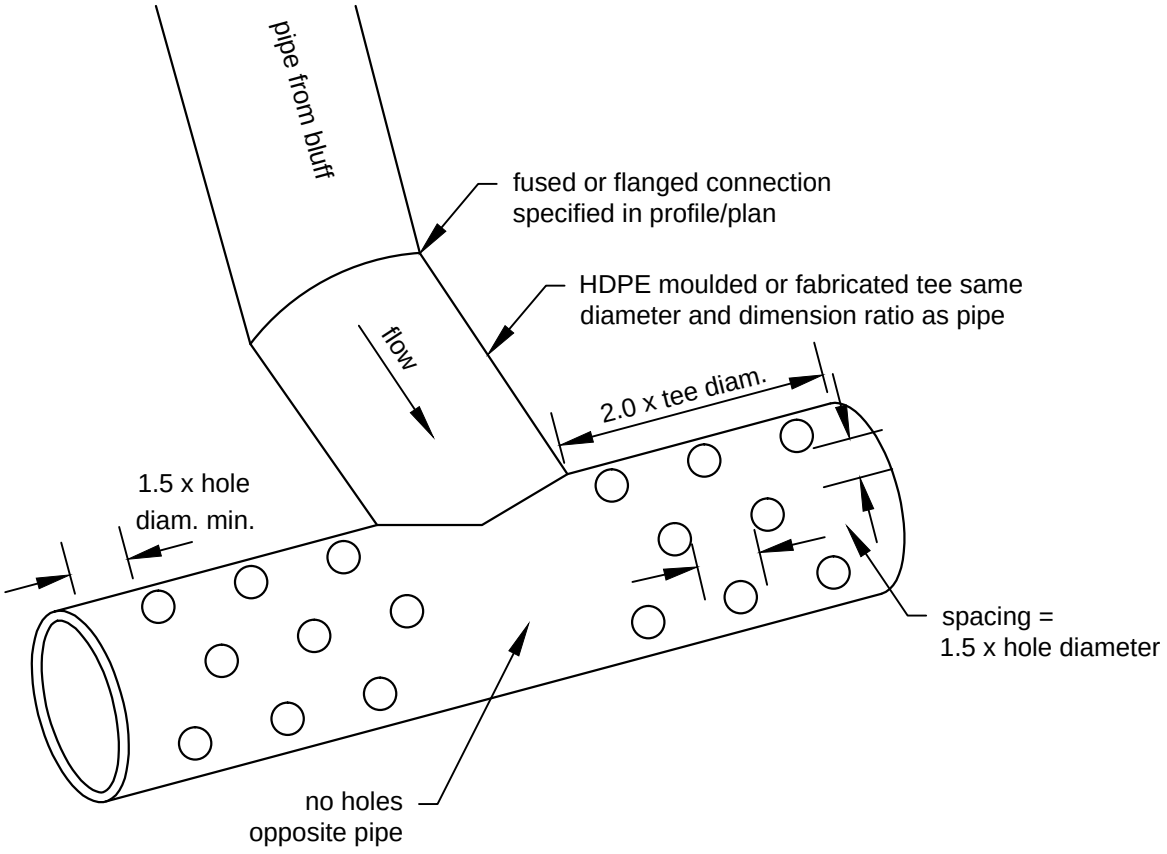

Drill holes in front half of tee only.
Hole diameter (inches) = tee diameter (inches) divided by 6
(ex. 6 inch tee = 1 inch holes
18 inch tee = 3 inch holes)

NOT TO SCALE

DEPARTMENT OF
ECOLOGY
State of Washington

Figure V-4.5.11
Diffuser TEE
(an example of energy dissipating end feature)

Revised January 2016

Please see *http://www.ecy.wa.gov/copyright.html* for copyright notice including permissions, limitation of liability, and disclaimer.

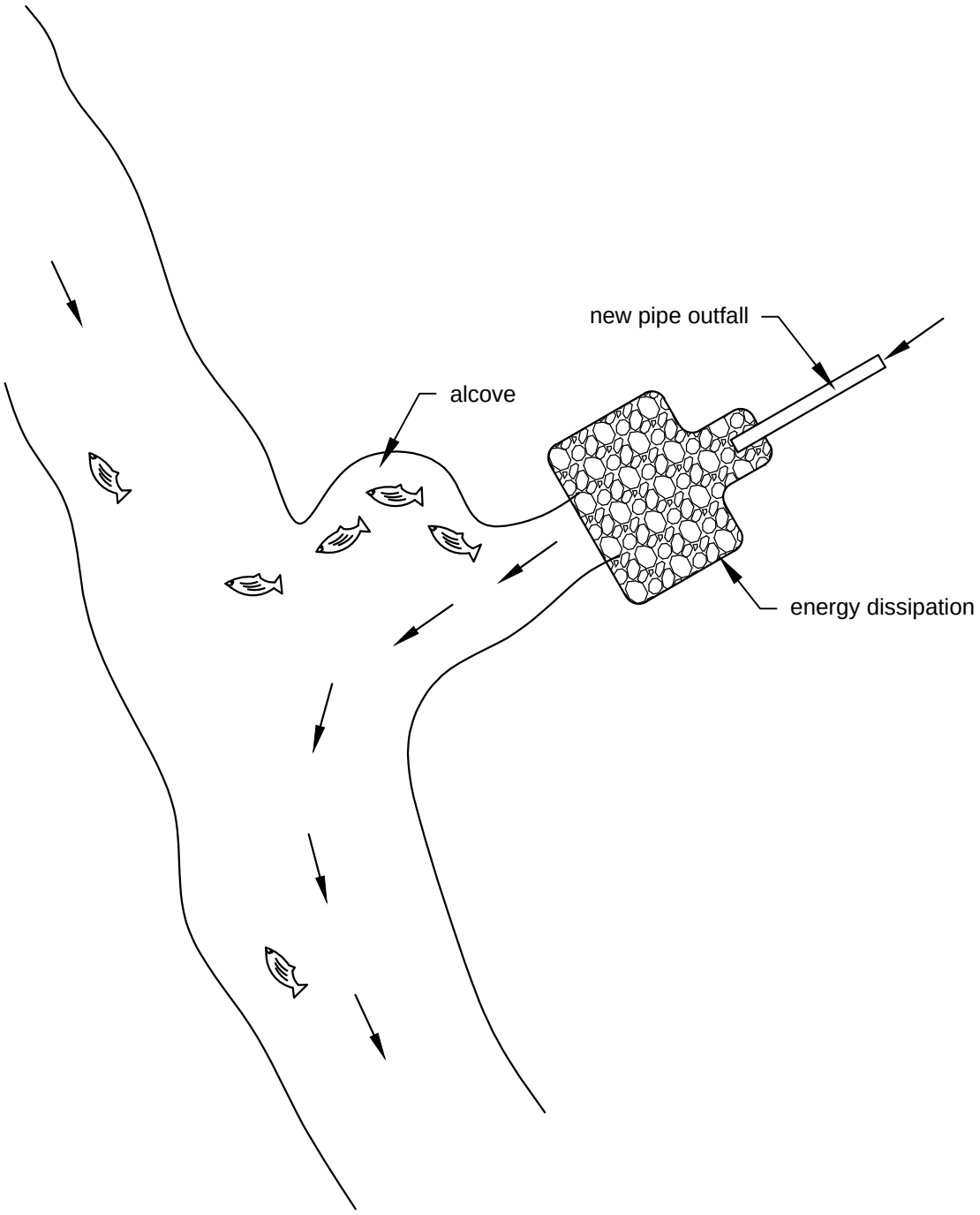

NOT TO SCALE

DEPARTMENT OF
ECOLOGY
State of Washington

Figure V-4.5.12
Fish Habitat Improvement at New Outfalls

Revised January 2016

Please see *http://www.ecy.wa.gov/copyright.html* for copyright notice including permissions, limitation of liability, and disclaimer.

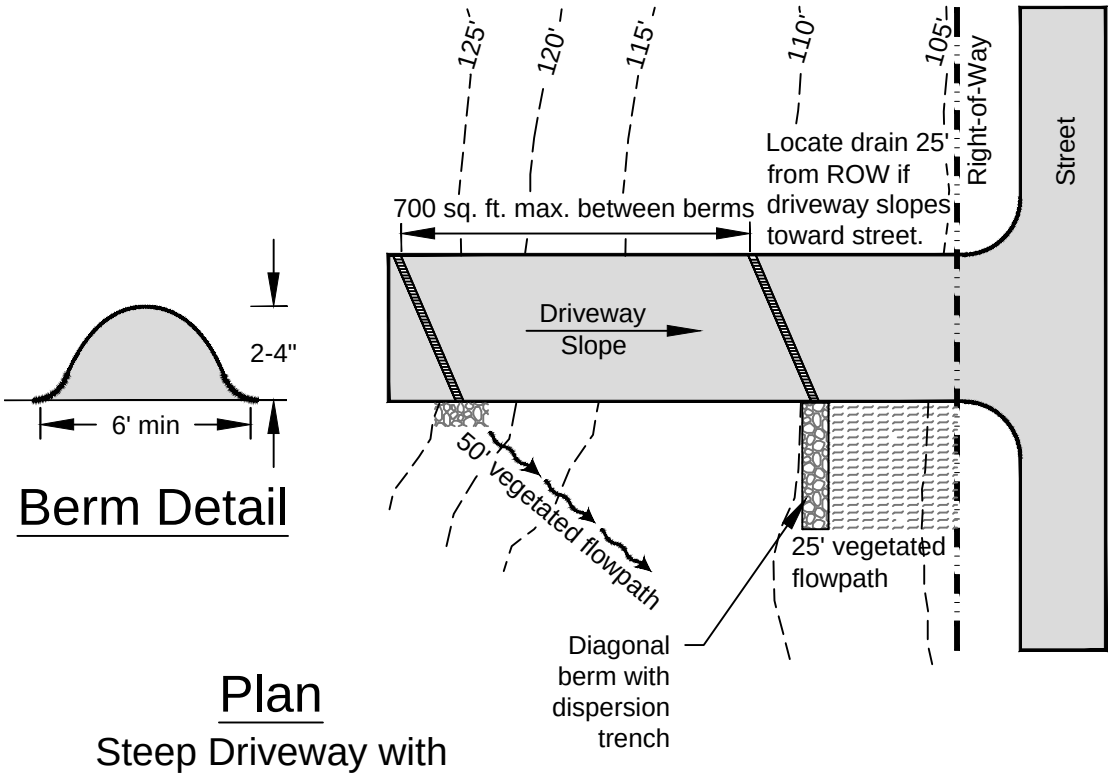

Berm Detail

Plan

Steep Driveway with Diagonal Berms

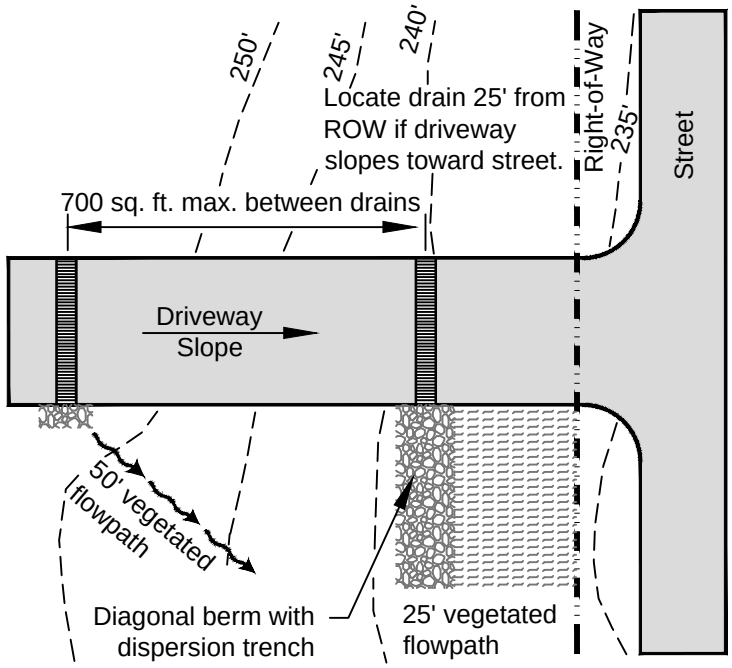

Plan

Steep Driveway with Slotted Drains

NOT TO SCALE

DEPARTMENT OF ECOLOGY
State of Washington

Figure V-5.3.1
Typical Concentrated Flow Dispersion for Steep Driveways

Revised January 2016

Please see *http://www.ecy.wa.gov/copyright.html* for copyright notice including permissions, limitation of liability, and disclaimer.

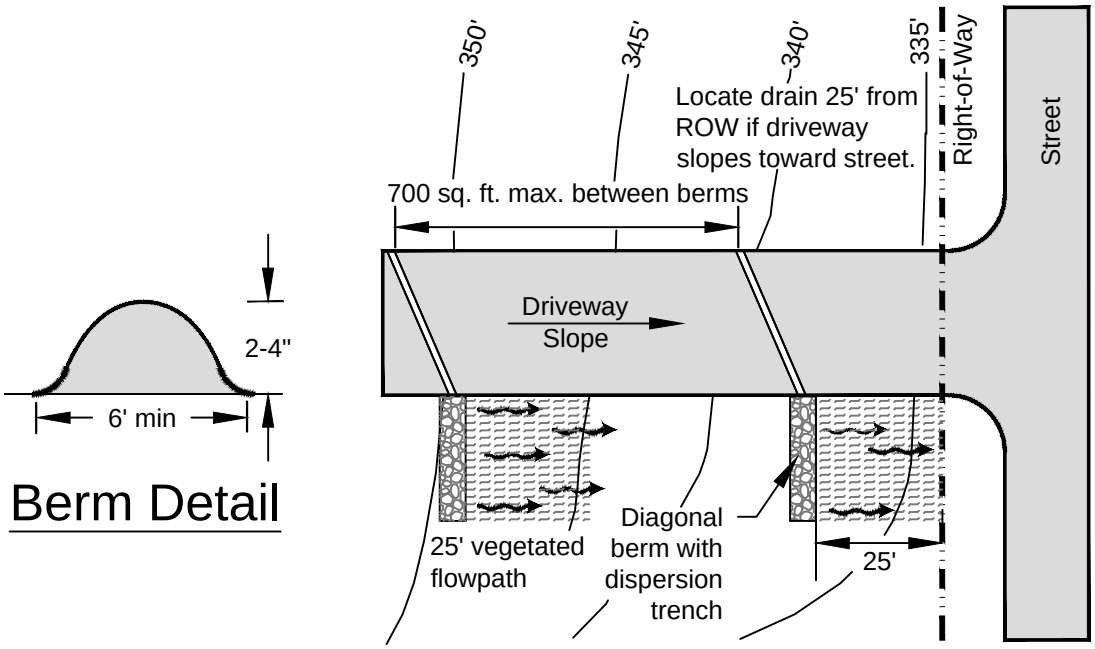

Plan

Driveway Dispersion Trench

Driveway Slope Varies and Slopes Toward Street

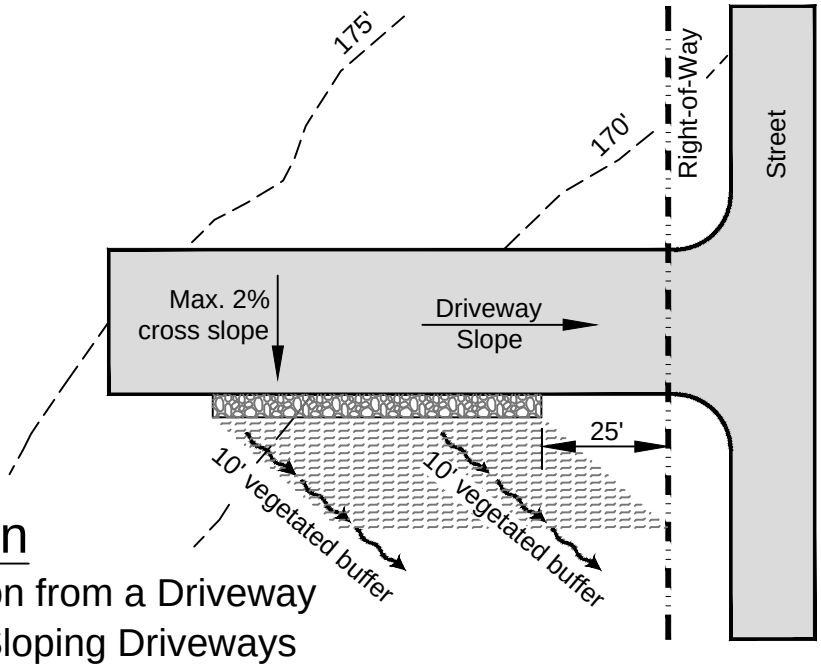

Plan

Sheet Flow Dispersion from a Driveway

Flat to Moderately Sloping Driveways

NOT TO SCALE

DEPARTMENT OF ECOLOGY State of Washington

Figure V-5.3.2
Sheet Flow Dispersion for Driveways

Revised January 2016

Please see *http://www.ecy.wa.gov/copyright.html* for copyright notice including permissions, limitation of liability, and disclaimer.

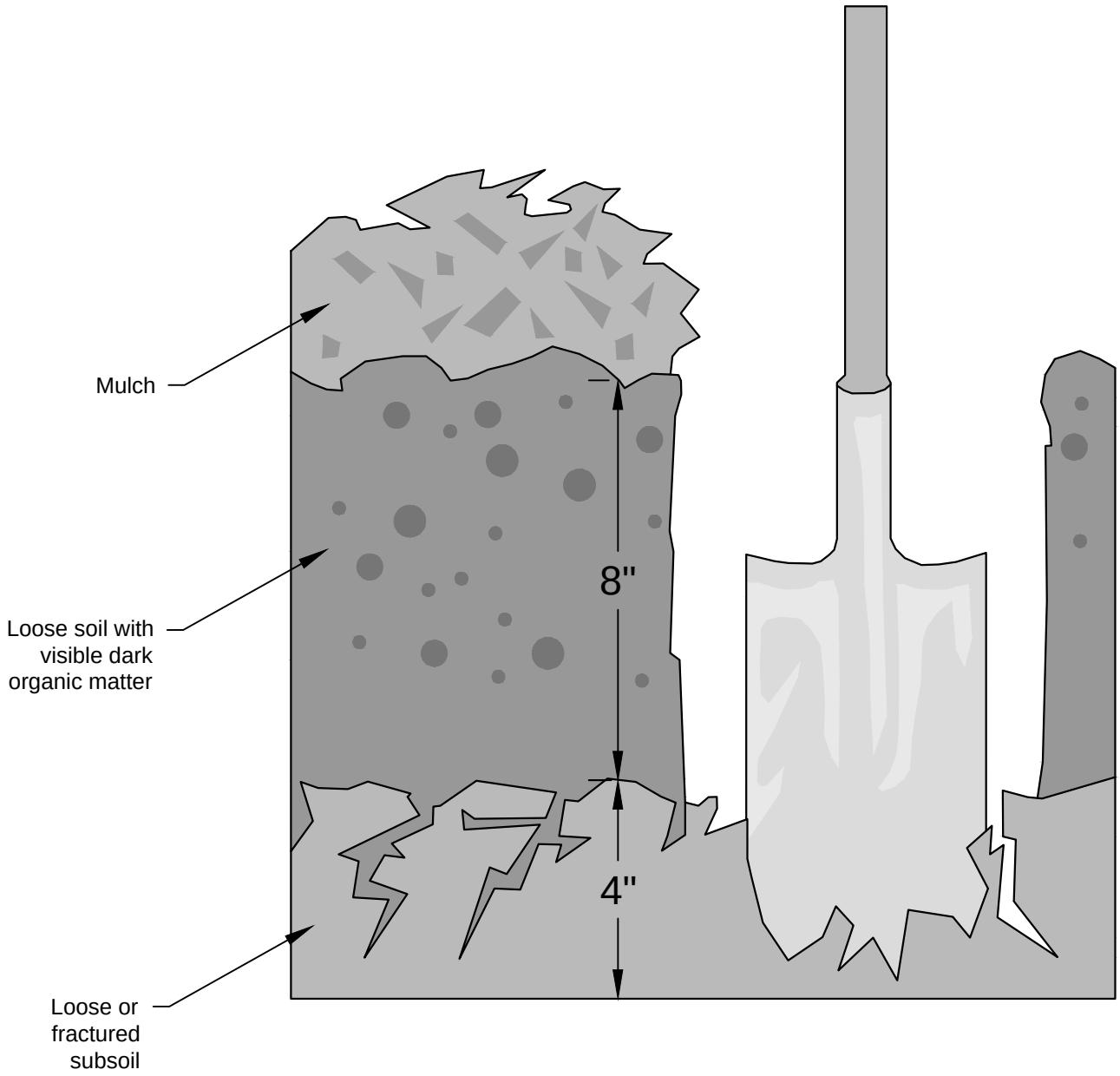

Reprinted from *Guidelines and Resources For Implementing Soil Quality and Depth BMP T5.13 in WDOE Stormwater Management Manual for Western Washington*, 2010, Washington Organic Recycling Council

NOT TO SCALE

DEPARTMENT OF ECOLOGY
State of Washington

Figure V-5.3.3
Planting Bed Cross-Section

Revised January 2016

Please see *http://www.ecy.wa.gov/copyright.html* for copyright notice including permissions, limitation of liability, and disclaimer.

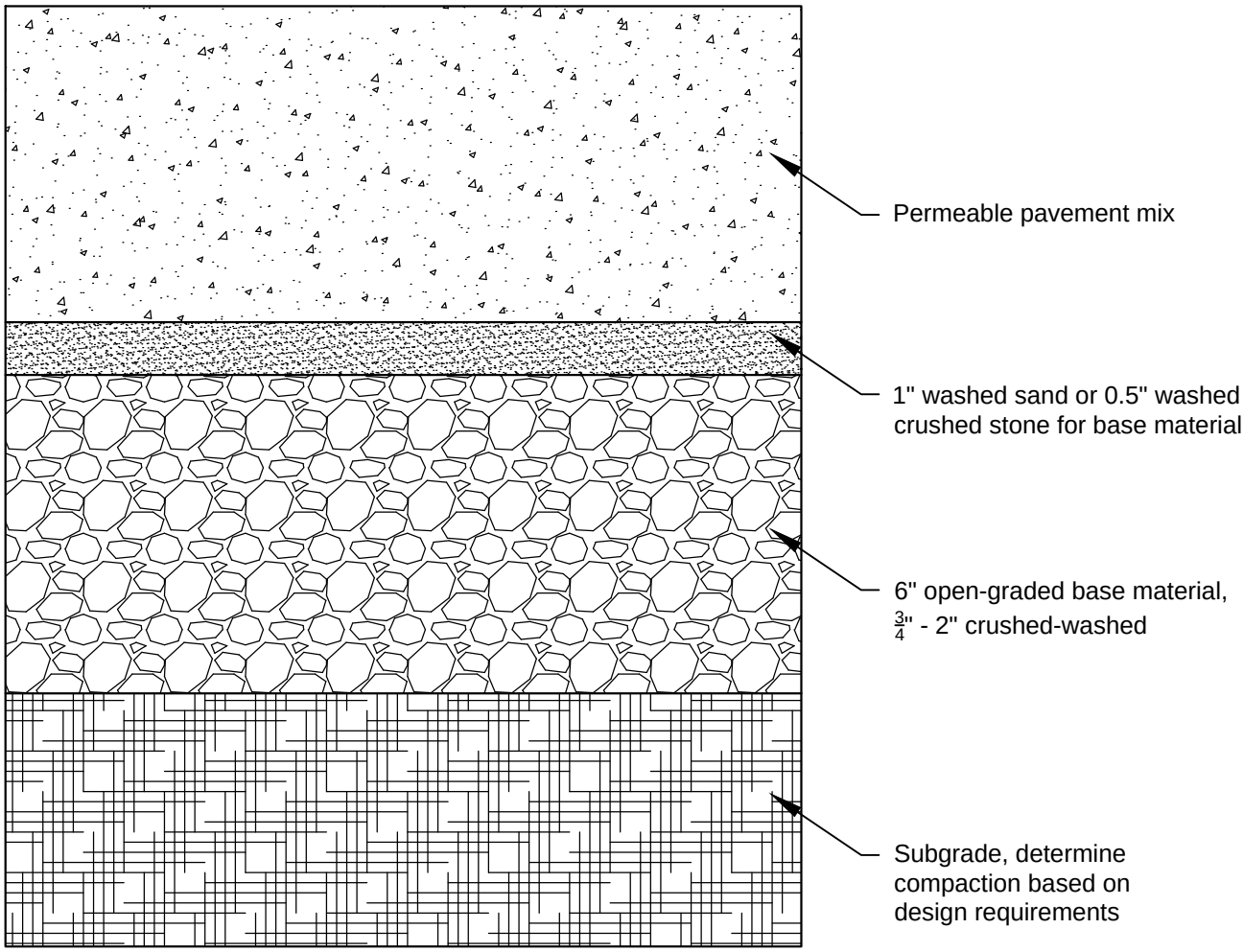

NOT TO SCALE

DEPARTMENT OF ECOLOGY
State of Washington

Figure V-5.3.4
Example of a Permeable Pavement (Concrete or Asphalt) Section

Revised January 2016

Please see *http://www.ecy.wa.gov/copyright.html* for copyright notice including permissions, limitation of liability, and disclaimer.

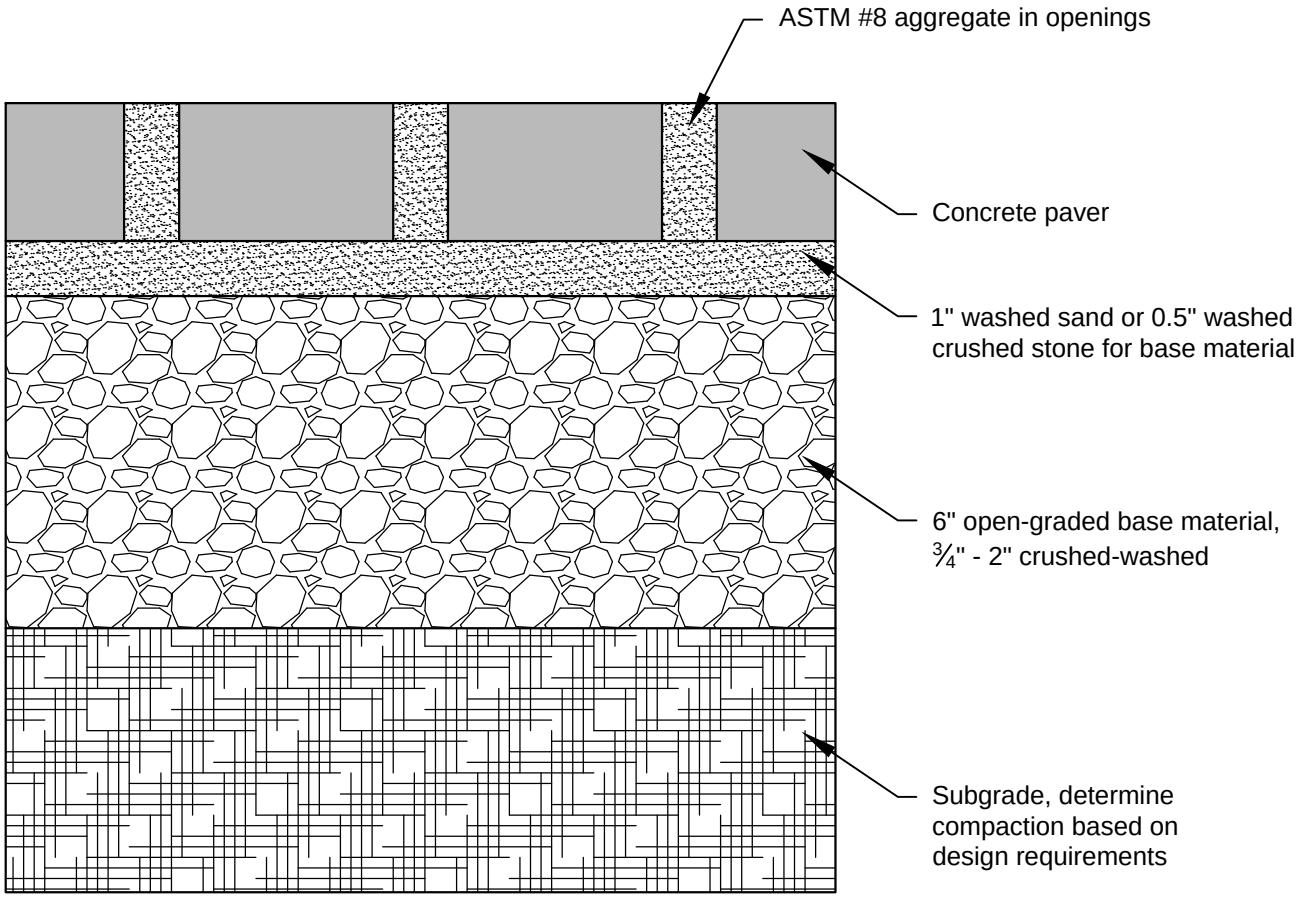

NOT TO SCALE

DEPARTMENT OF ECOLOGY
State of Washington

Figure V-5.3.5
Example of a Permeable Paver Section

Revised January 2016

Please see *http://www.ecy.wa.gov/copyright.html* for copyright notice including permissions, limitation of liability, and disclaimer.

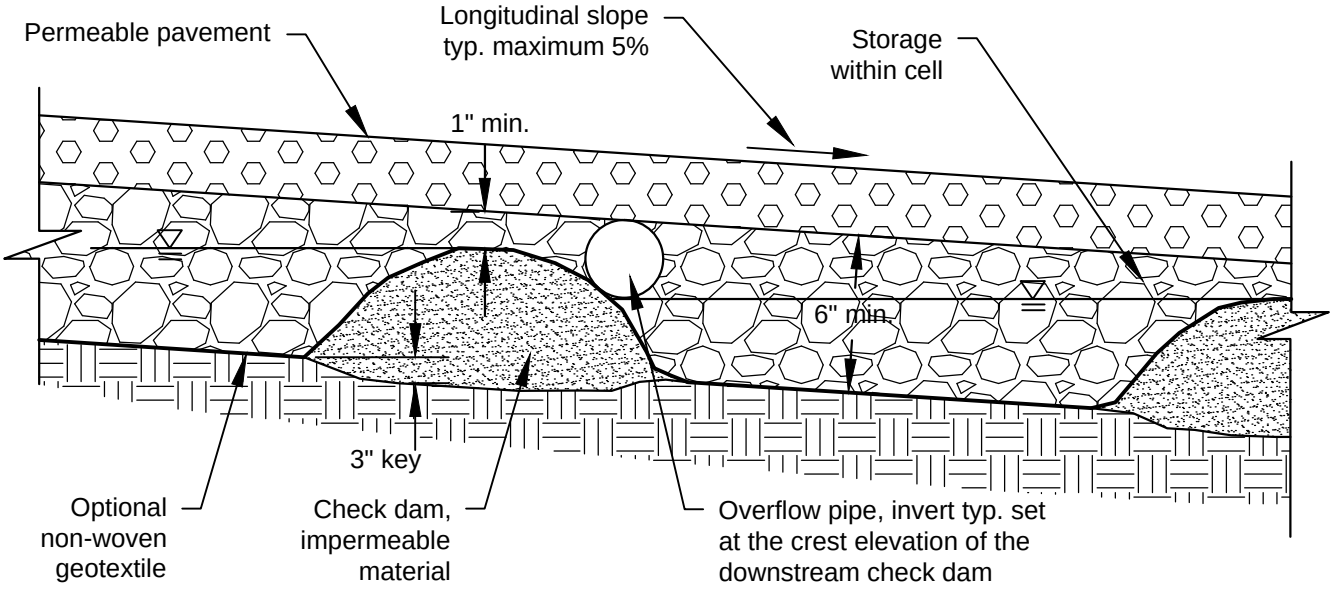

NOT TO SCALE

DEPARTMENT OF
ECOLOGY
State of Washington

Figure V-5.3.6
Example of a Check Dam Along a Sloped Section of Permeable Pavement

Revised January 2016

Please see *http://www.ecy.wa.gov/copyright.html* for copyright notice including permissions, limitation of liability, and disclaimer.

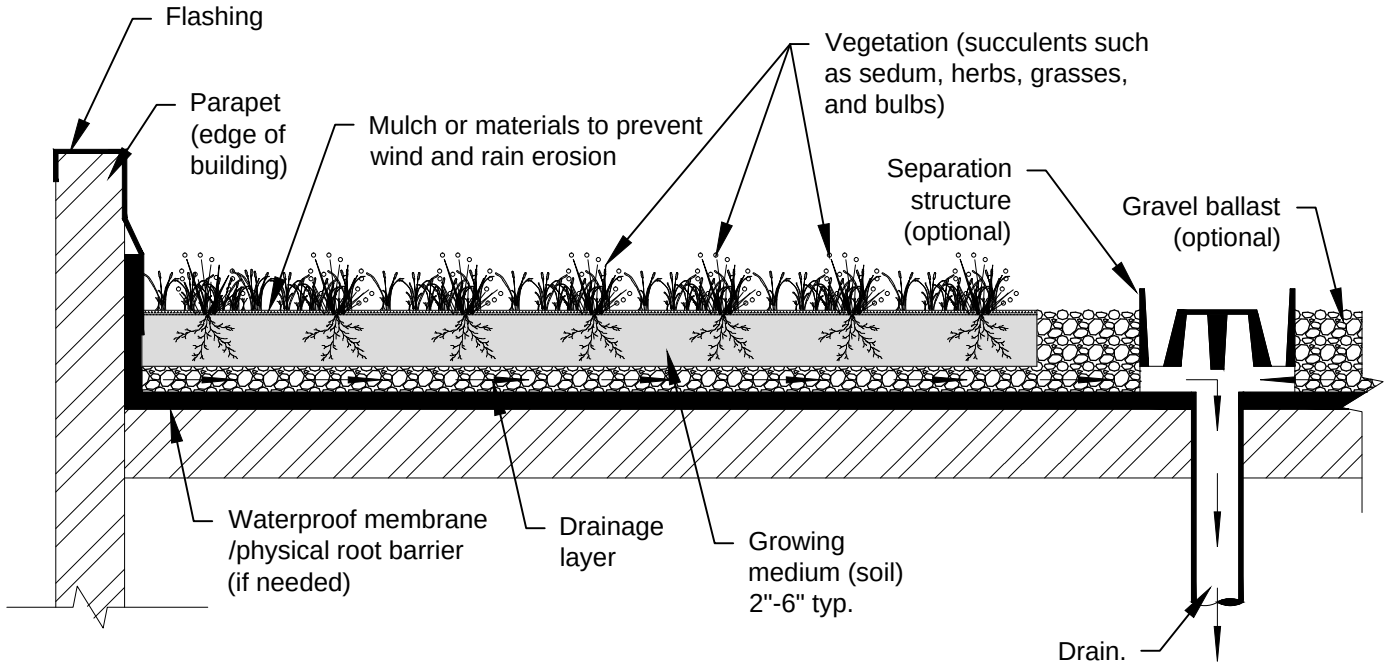

NOT TO SCALE

DEPARTMENT OF ECOLOGY
State of Washington

Figure V-5.3.7
Example of a Vegetated Roof Section

Revised February 2016

Please see *http://www.ecy.wa.gov/copyright.html* for copyright notice including permissions, limitation of liability, and disclaimer.

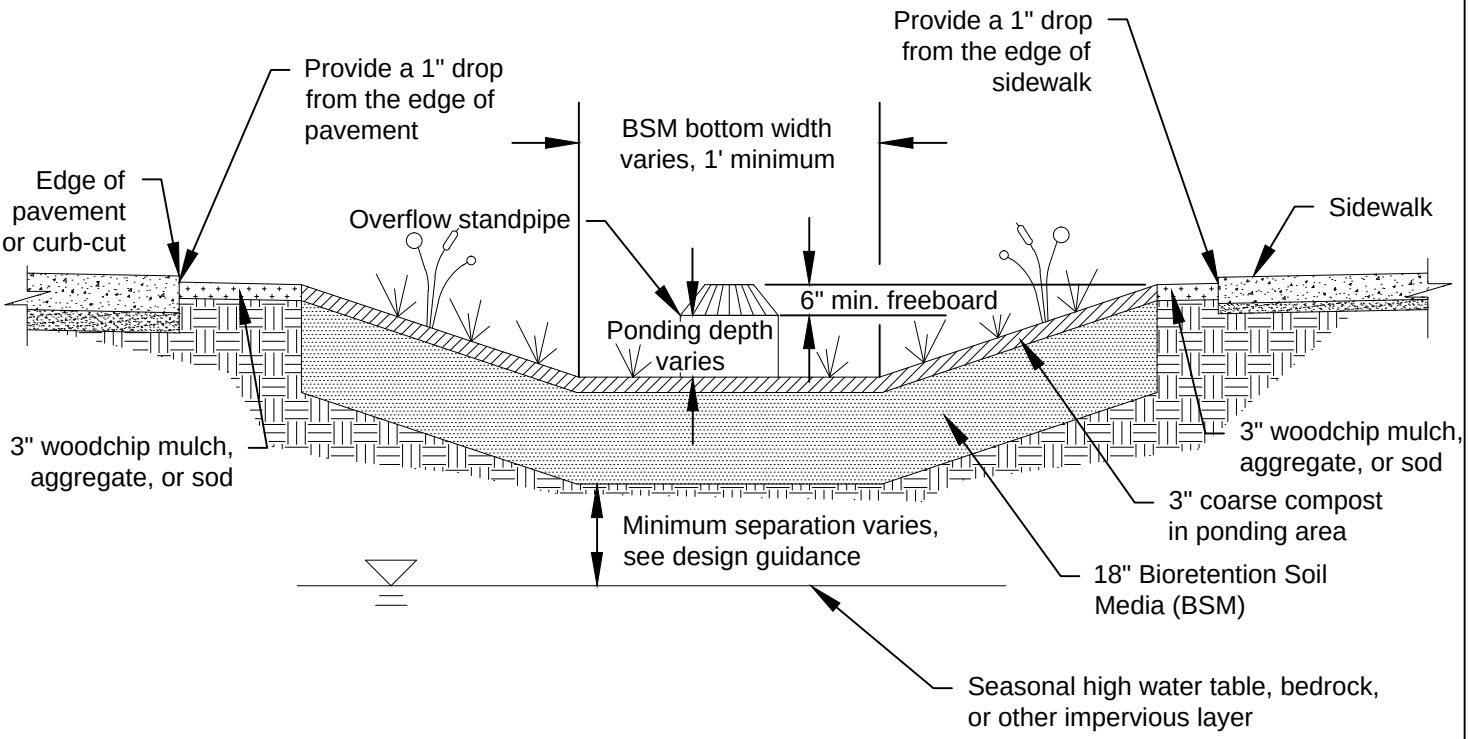

Notes:

1. Scarify subgrade 3" min. before bioretention soil installation
2. Compact BSM to 85% per ASTM 1577

NOT TO SCALE

DEPARTMENT OF ECOLOGY
State of Washington

Figure V-7.4.1a
Typical Bioretention

Revised February 2016

Please see *http://www.ecy.wa.gov/copyright.html* for copyright notice including permissions, limitation of liability, and disclaimer.

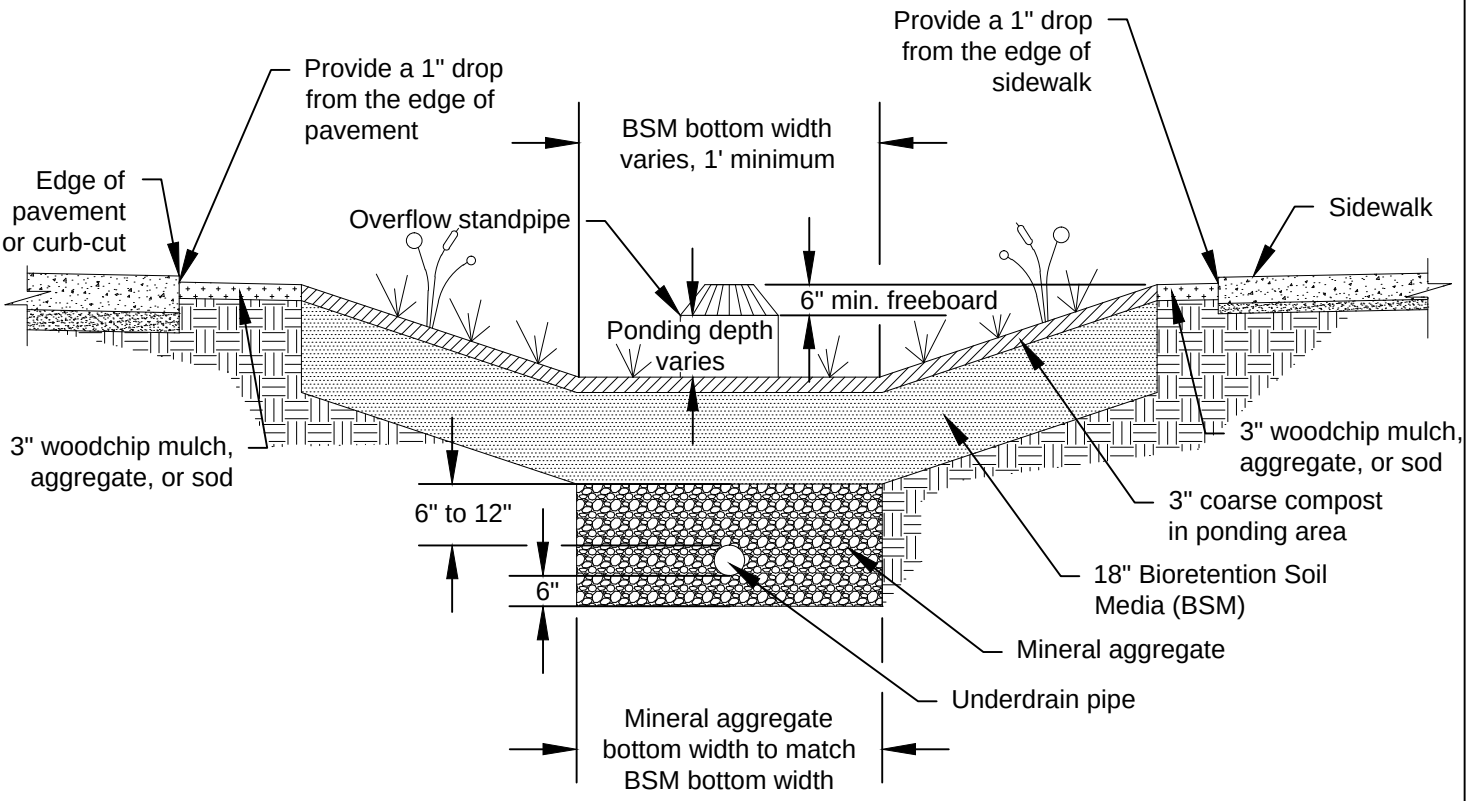

Notes:

1. Scarify subgrade 3" min. before bioretention soil installation
2. Compact BSM to 85% per ASTM 1577

NOT TO SCALE

DEPARTMENT OF ECOLOGY
State of Washington

Figure V-7.4.1b
Typical Bioretention w/Underdrain

Revised February 2016

Please see *http://www.ecy.wa.gov/copyright.html* for copyright notice including permissions, limitation of liability, and disclaimer.

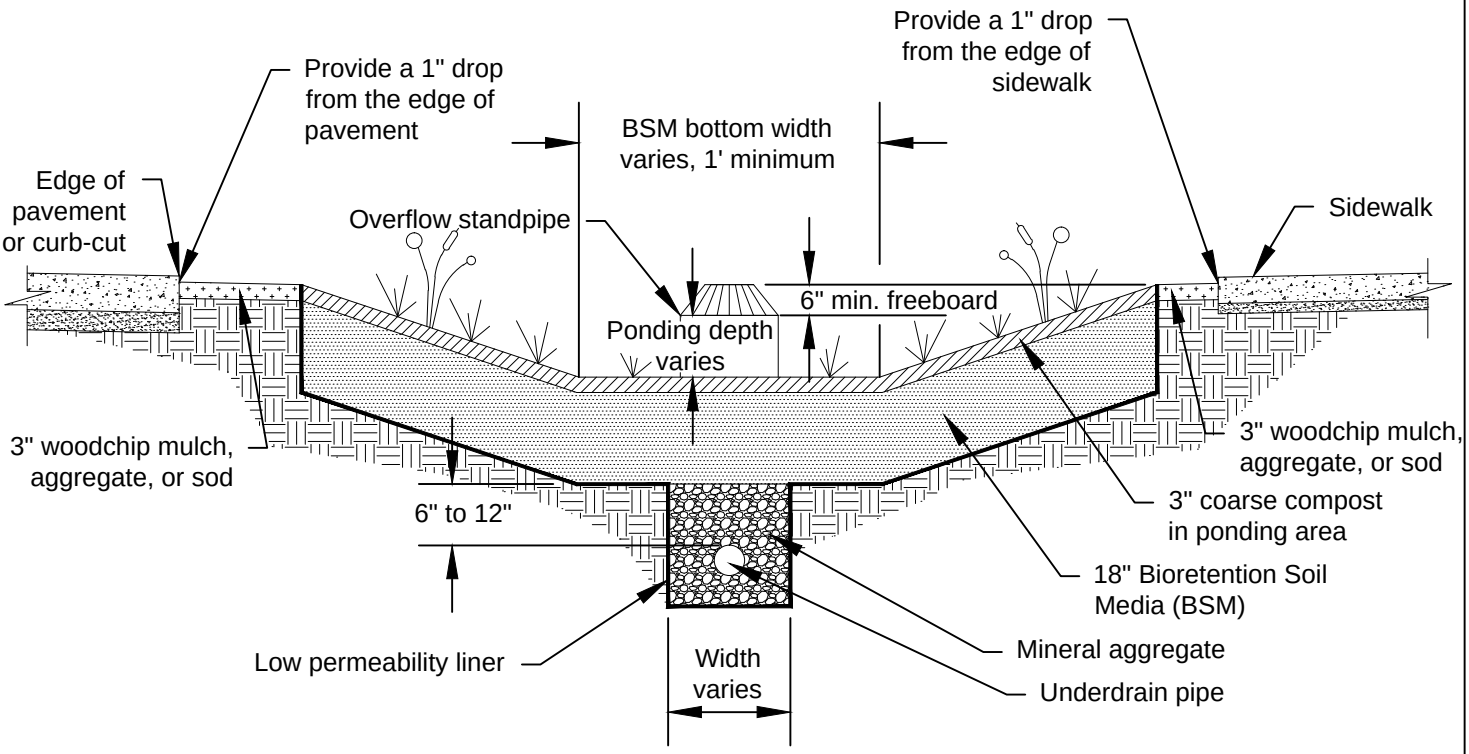

Notes:

1. Scarify subgrade 3" min. before bioretention soil installation
2. Compact BSM to 85% per ASTM 1577

NOT TO SCALE

DEPARTMENT OF ECOLOGY
State of Washington

Figure V-7.4.1c
Typical Bioretention w/Liner (Not LID)

Revised February 2016

Please see *http://www.ecy.wa.gov/copyright.html* for copyright notice including permissions, limitation of liability, and disclaimer.

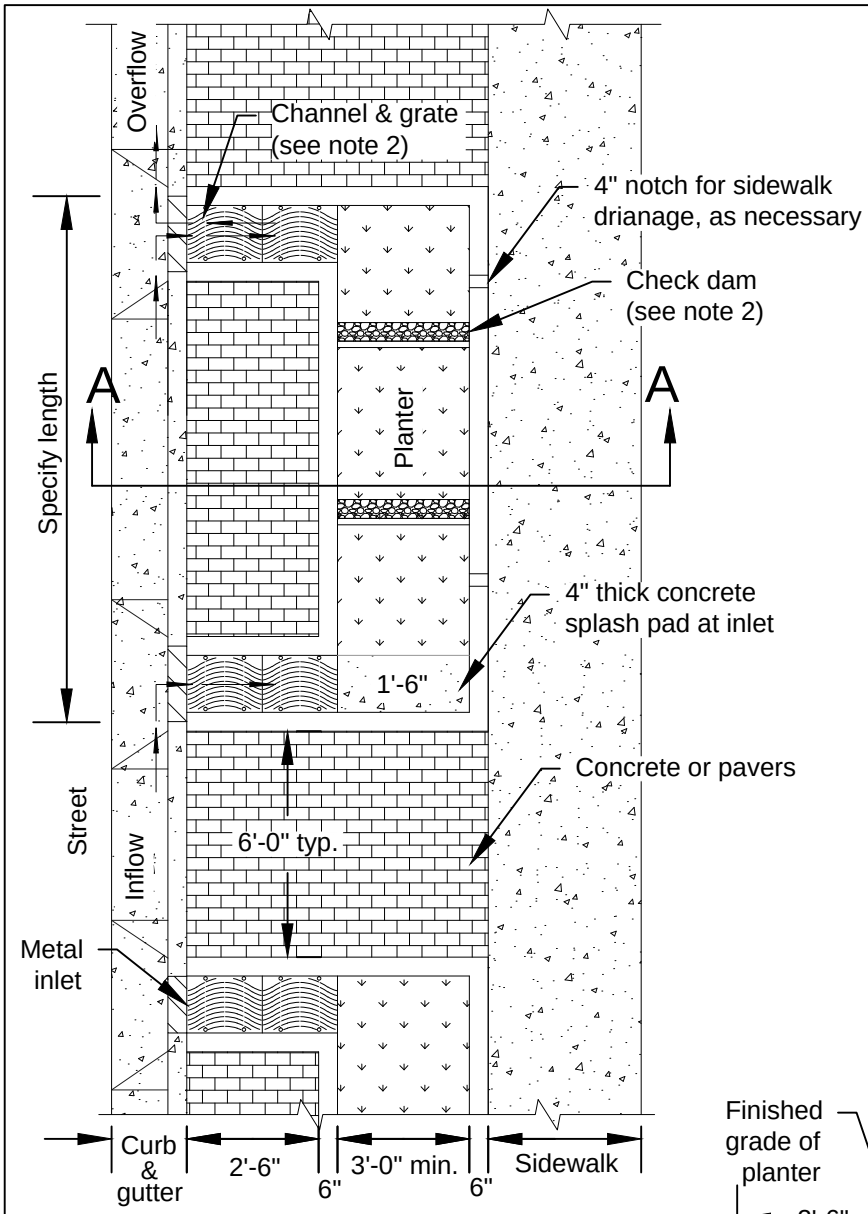

Plan View

DESIGNER INFORMATION:

1. Adapt plan view example to your engineered design.
2. Include beginning and ending stations for each facility. Provide stations and/or dimensions and elevations at every inlet, outlet, check dam, planter corner and sidewalk notch.
3. Longitudinal slope of planter matches road.
4. Sidewalk elevation must be set above inlet and outlet elevations to allow overflow to drain to street before sidewalk.
5. Minimum interior planter width is 3 feet. A minimum of 4 feet interior planter width is required for street trees in planter.
6. Existing utility lines must be sleeved or relocated. Proposed utility lines to be located out of the facility.
7. Area and depth of facility are based upon engineering calculations and right-of-way constraints.
8. May use concrete or pavers.

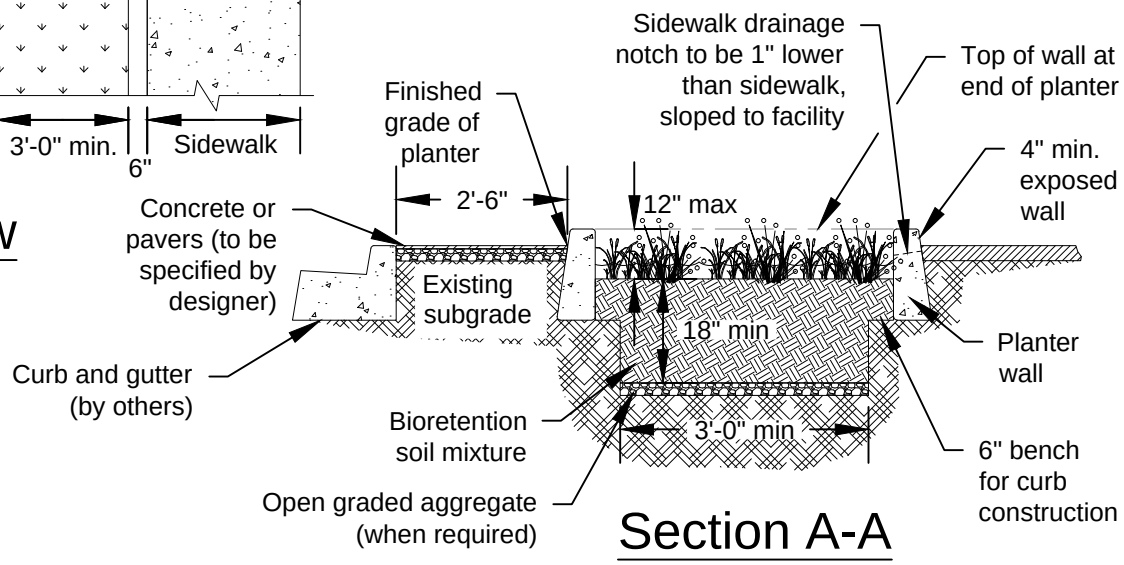

Section A-A

NOT TO SCALE

DEPARTMENT OF
ECOLOGY
State of Washington

Figure V-7.4.2
Example of a Bioretention Planter

Revised February 2016

Please see *http://www.ecy.wa.gov/copyright.html* for copyright notice including permissions, limitation of liability, and disclaimer.

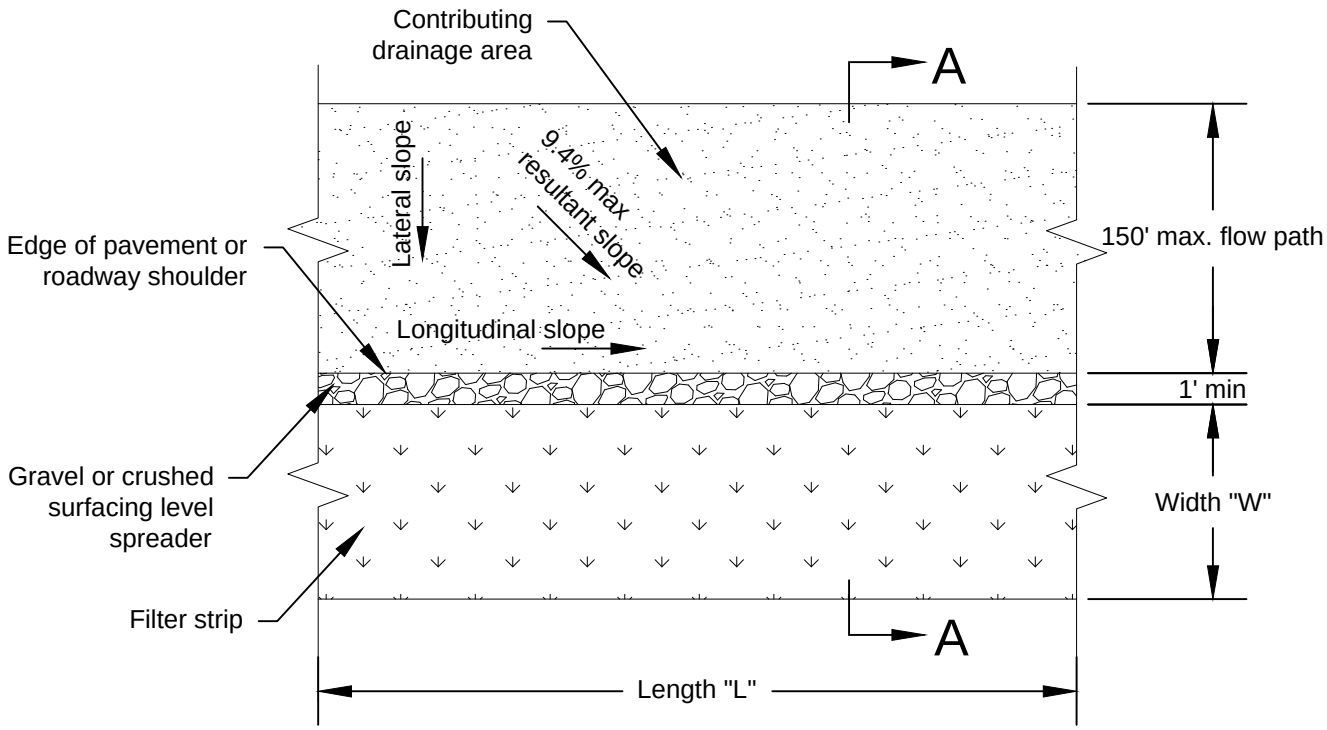

Plan View

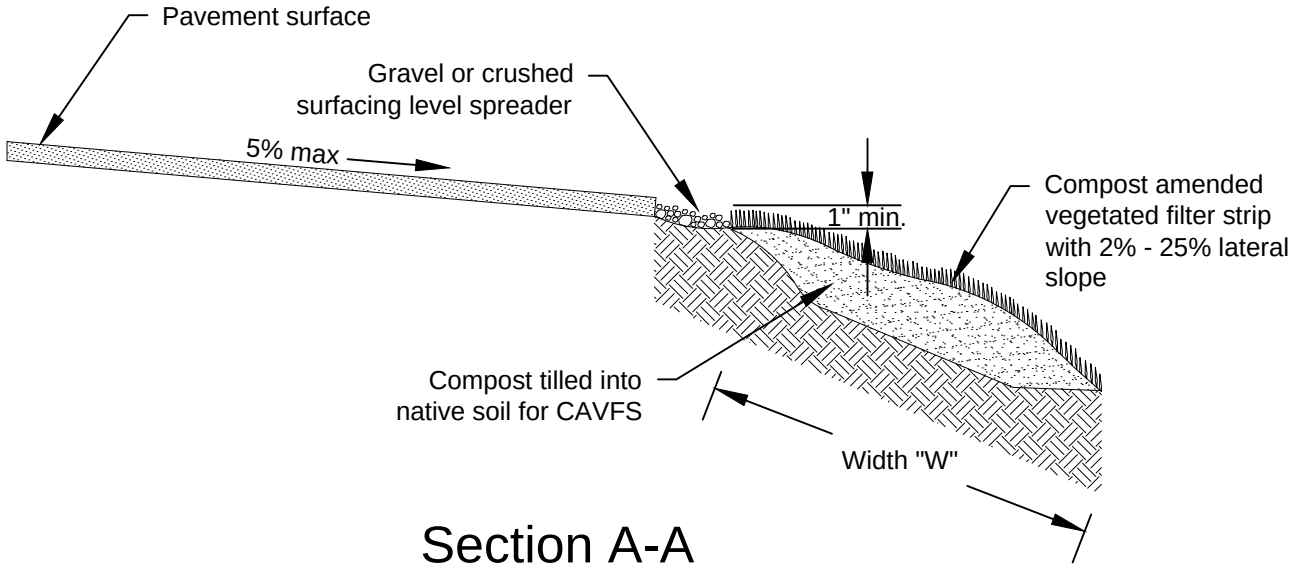

Section A-A

This drawing is only an example that needs to be adjusted and revised for each project.

NOT TO SCALE

DEPARTMENT OF ECOLOGY
State of Washington

Figure V-7.4.3
Example of a Compost Amended Vegetated Filter Strip (CAVFS)

Revised February 2016

Please see *http://www.ecy.wa.gov/copyright.html* for copyright notice including permissions, limitation of liability, and disclaimer.

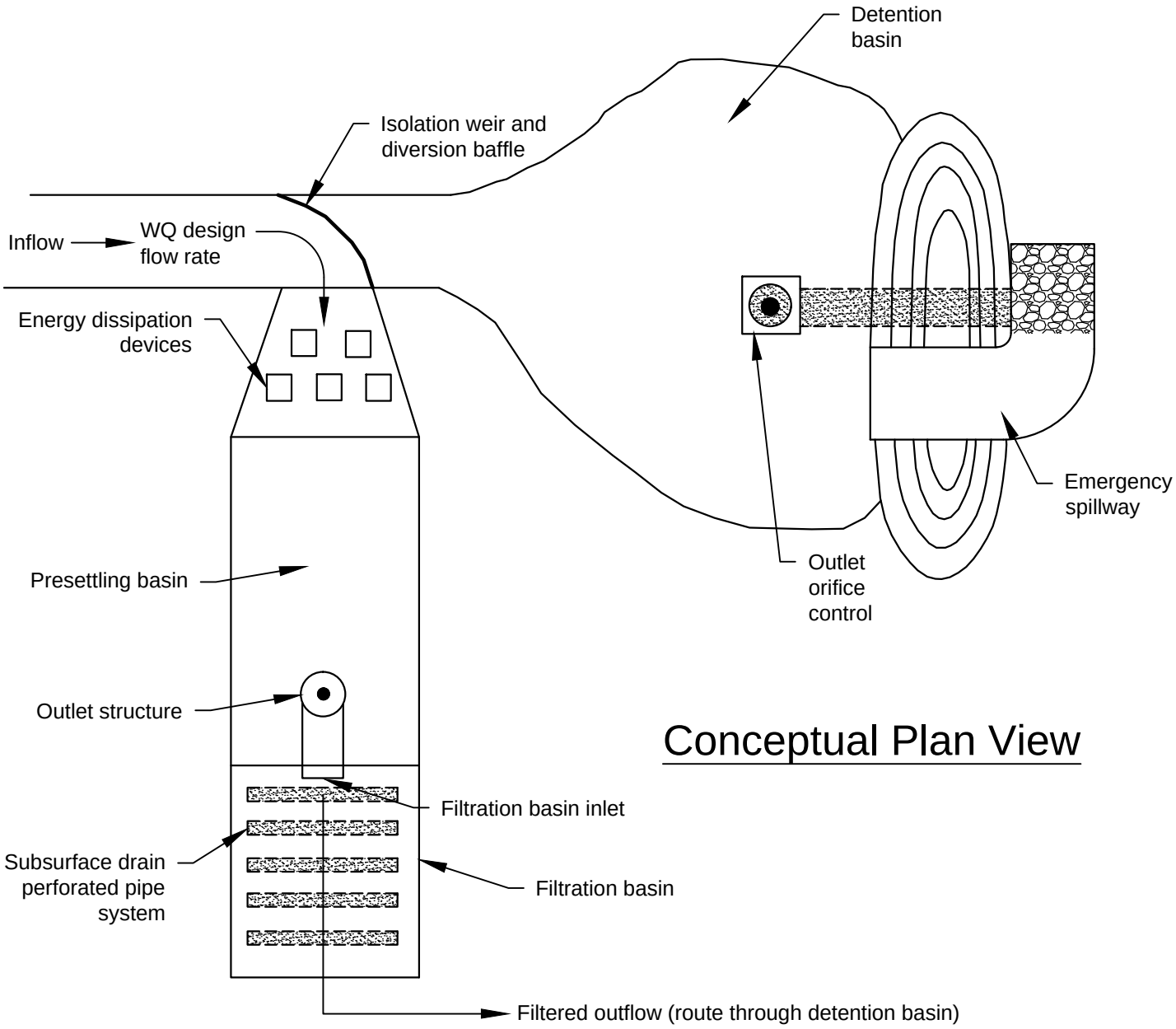

Source: City of Austin

NOT TO SCALE

DEPARTMENT OF ECOLOGY State of Washington

Figure V-8.5.1
Sand Filtration Basin Preceded by Presettling Basin (Variation of a Basic Sand Filter)

Revised February 2016

Please see *http://www.ecy.wa.gov/copyright.html* for copyright notice including permissions, limitation of liability, and disclaimer.

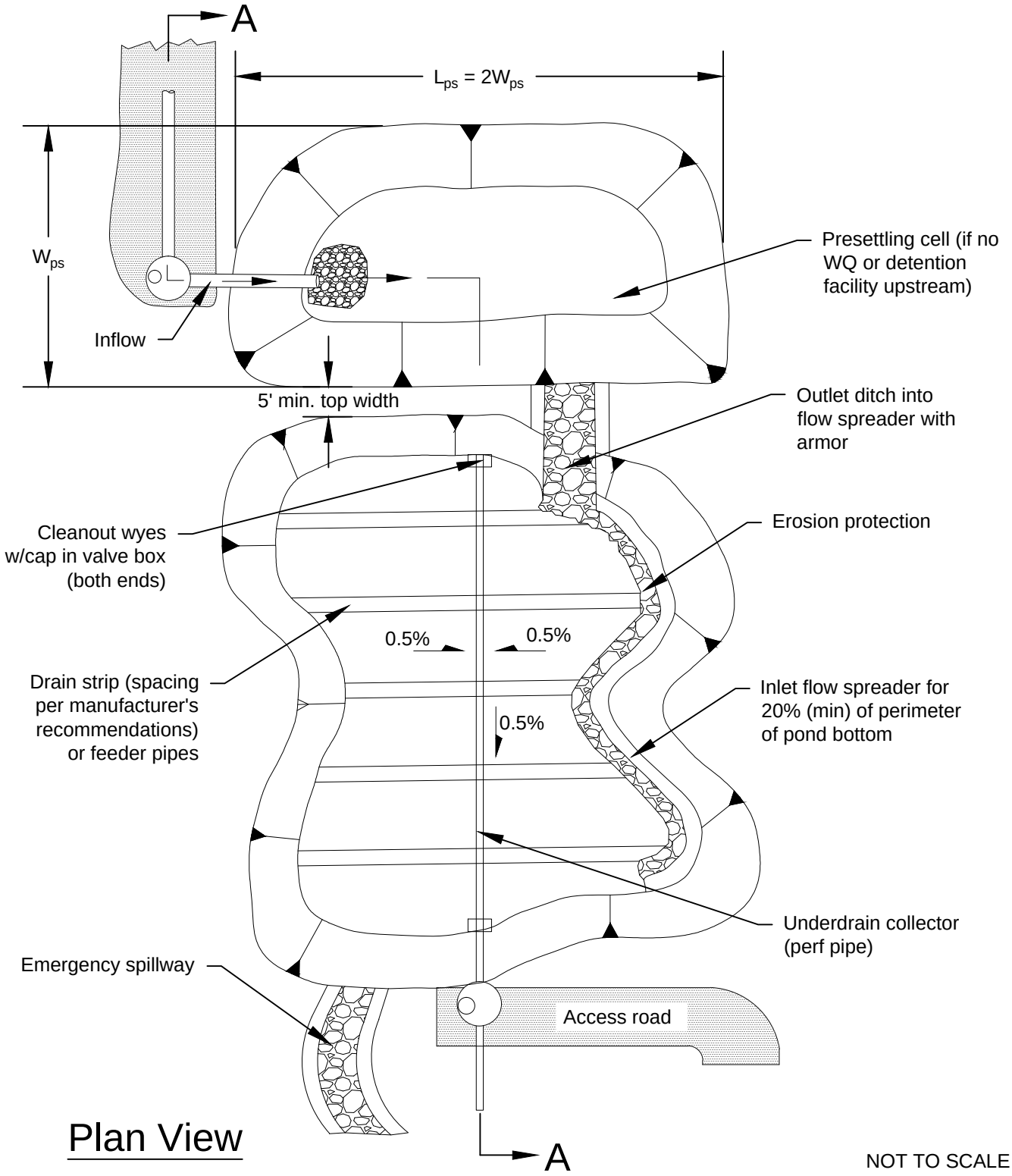

DEPARTMENT OF ECOLOGY
State of Washington

Figure V-8.5.2
Sand Filter with Pretreatment Cell

Revised February 2016

Please see *http://www.ecy.wa.gov/copyright.html* for copyright notice including permissions, limitation of liability, and disclaimer.

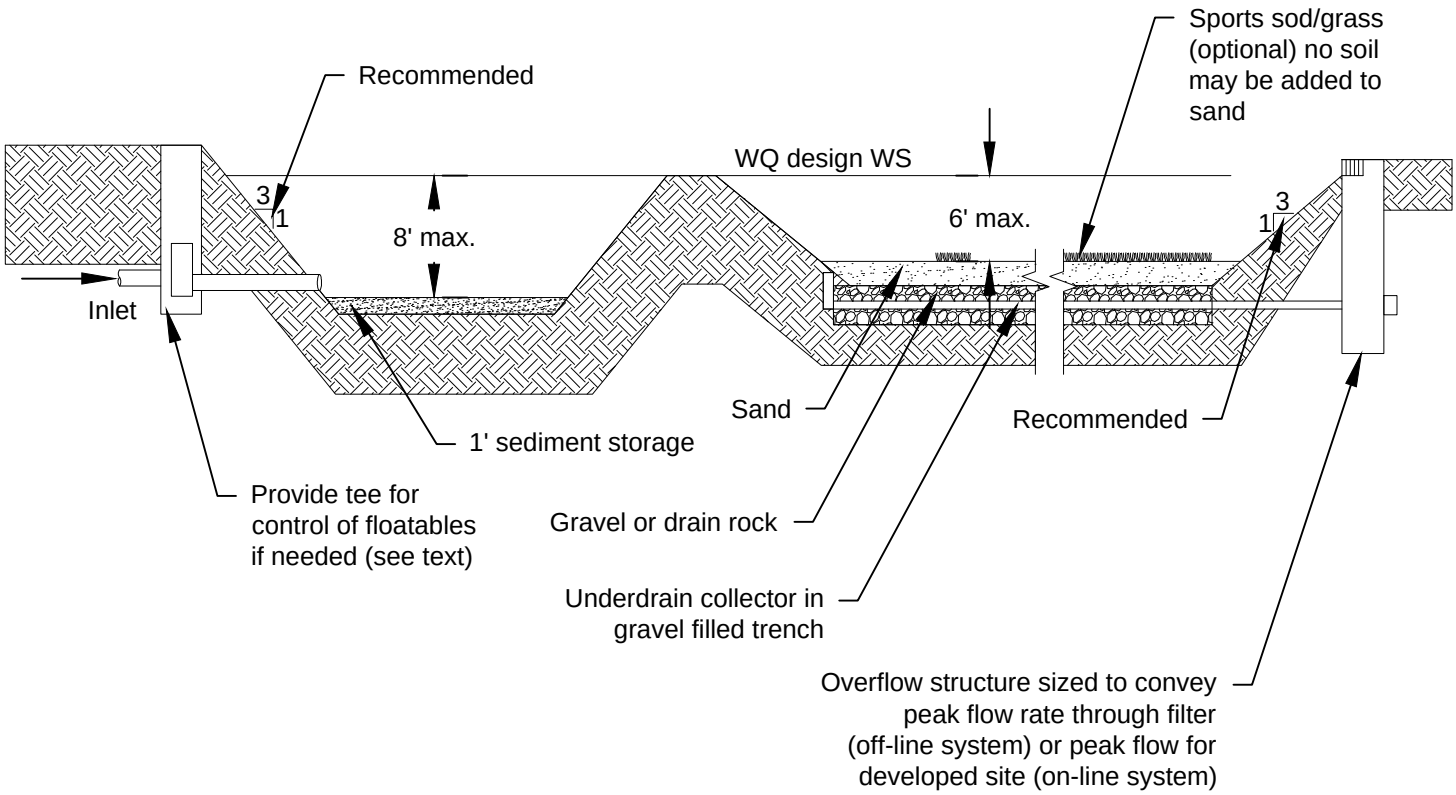

Section A-A

NOT TO SCALE

DEPARTMENT OF ECOLOGY
State of Washington

Figure V-8.5.2 (cont)
Sand Filter with Pretreatment Cell

Revised February 2016

Please see *http://www.ecy.wa.gov/copyright.html* for copyright notice including permissions, limitation of liability, and disclaimer.

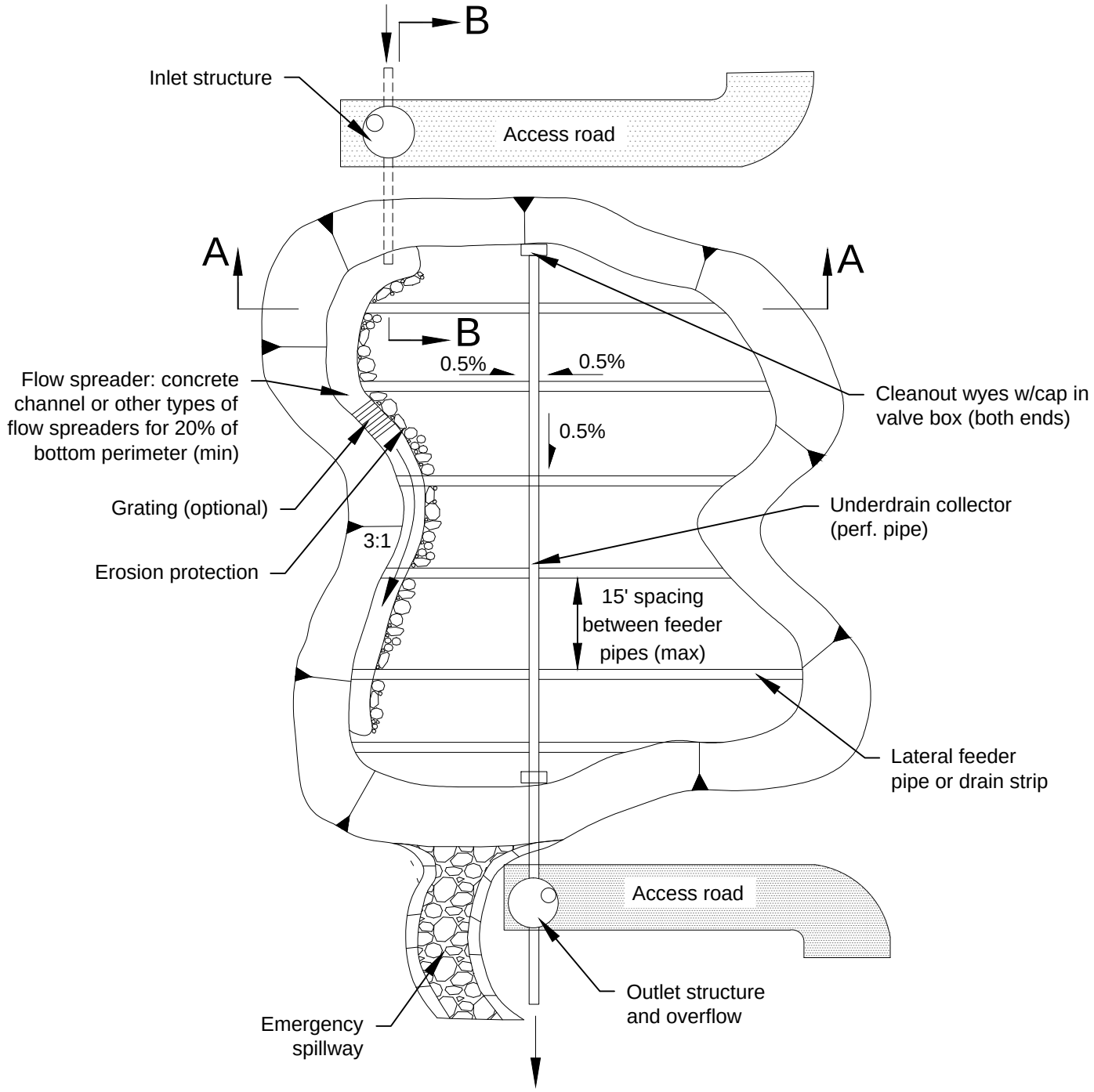

Plan View

NOT TO SCALE

DEPARTMENT OF ECOLOGY
State of Washington

Figure V-8.5.3
Sand Filter with Level Spreader

Revised February 2016

Please see *http://www.ecy.wa.gov/copyright.html* for copyright notice including permissions, limitation of liability, and disclaimer.

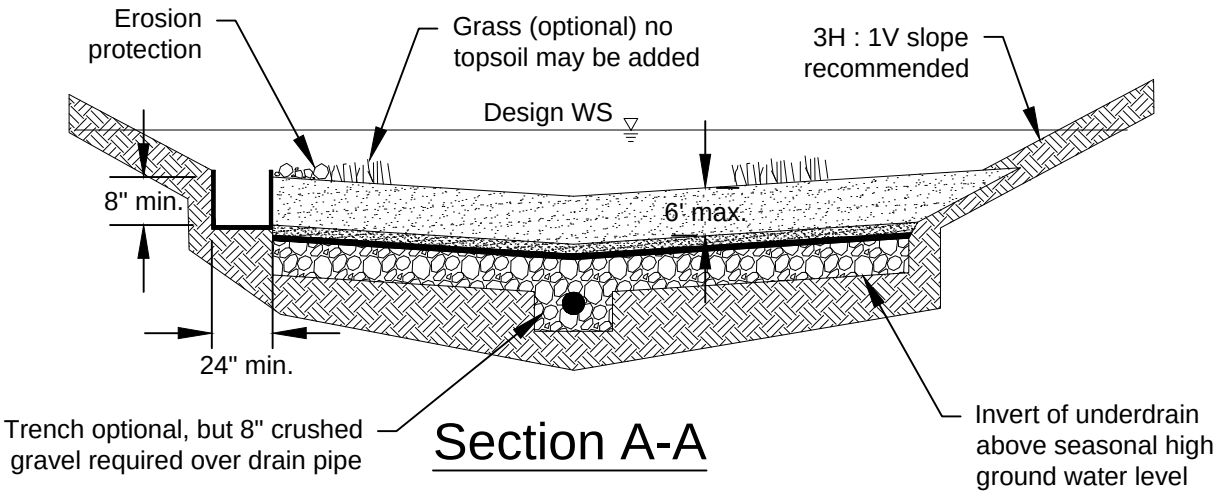

Section A-A

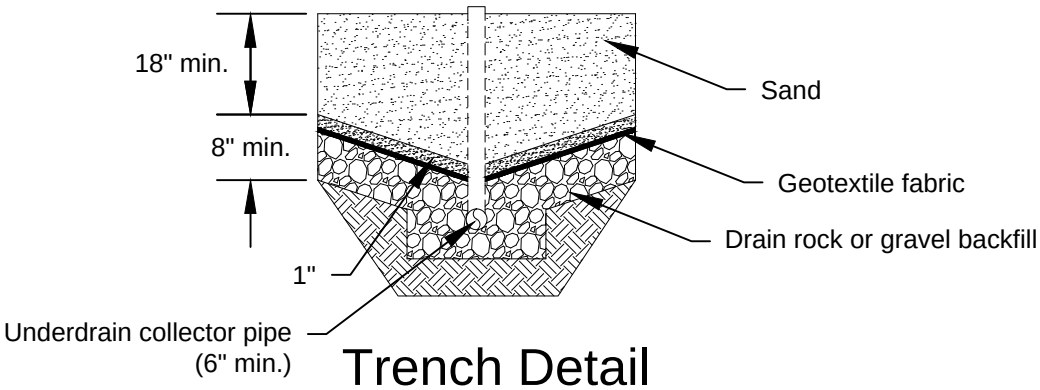

Trench Detail

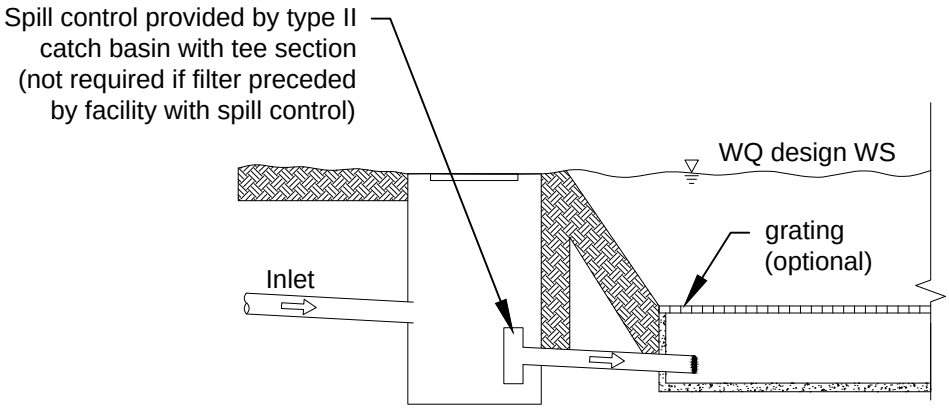

Section B-B

NOT TO SCALE

DEPARTMENT OF ECOLOGY
State of Washington

Figure V-8.5.3 (cont)
Sand Filter with Level Spreader

Revised February 2016

Please see *http://www.ecy.wa.gov/copyright.html* for copyright notice including permissions, limitation of liability, and disclaimer.

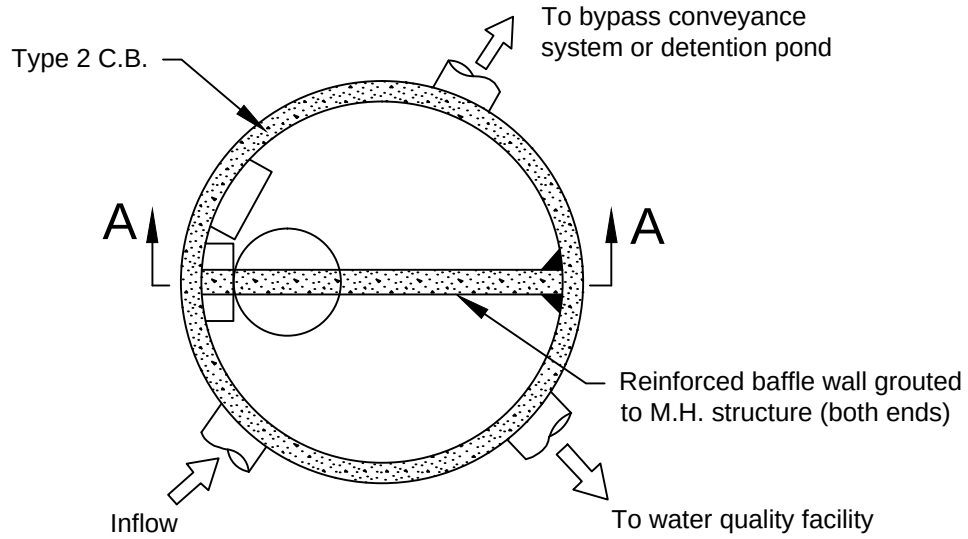

Plan View

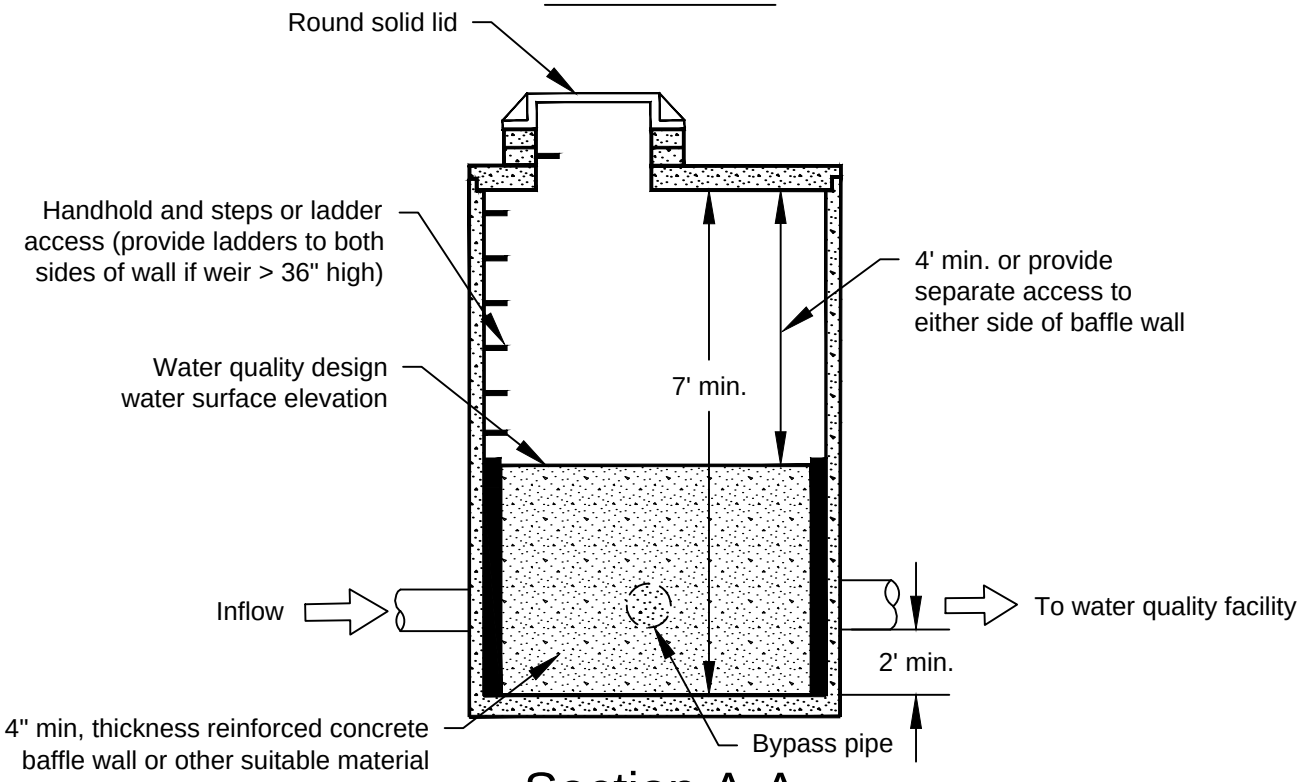

Section A-A

Note: The water quality discharge pipe may require an orifice plate to be installed on the outlet to control the height of the design water surface (weir height). The design water surface should be set to provide a minimum headwater/diameter ratio of 2.0 on the outlet pipe.

NOT TO SCALE

DEPARTMENT OF ECOLOGY
State of Washington

Figure V-8.5.4a
Flow Splitter, Option A

Revised February 2016

Please see *http://www.ecy.wa.gov/copyright.html* for copyright notice including permissions, limitation of liability, and disclaimer.

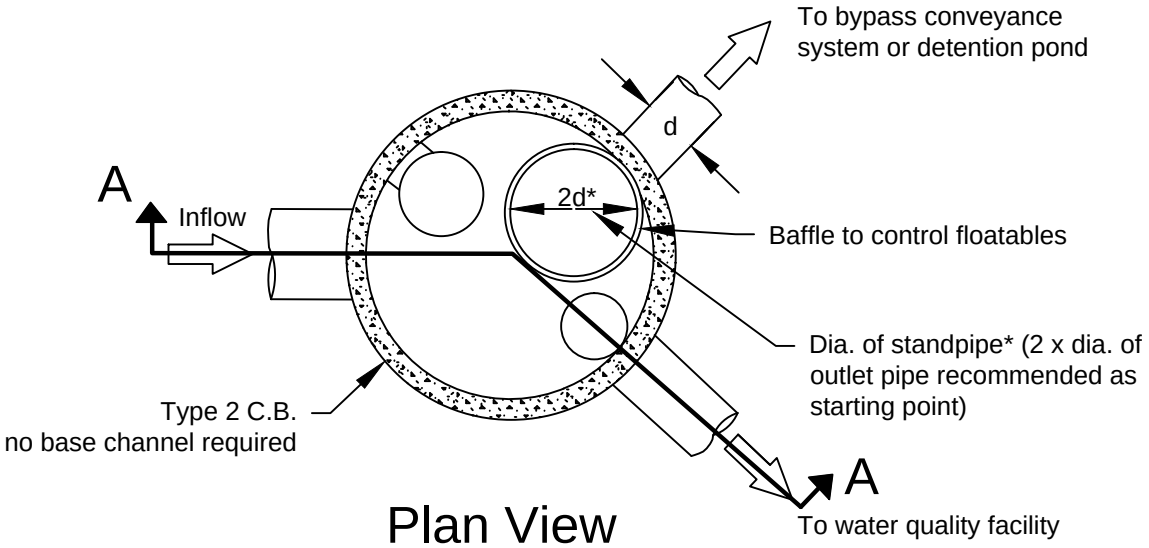

Plan View

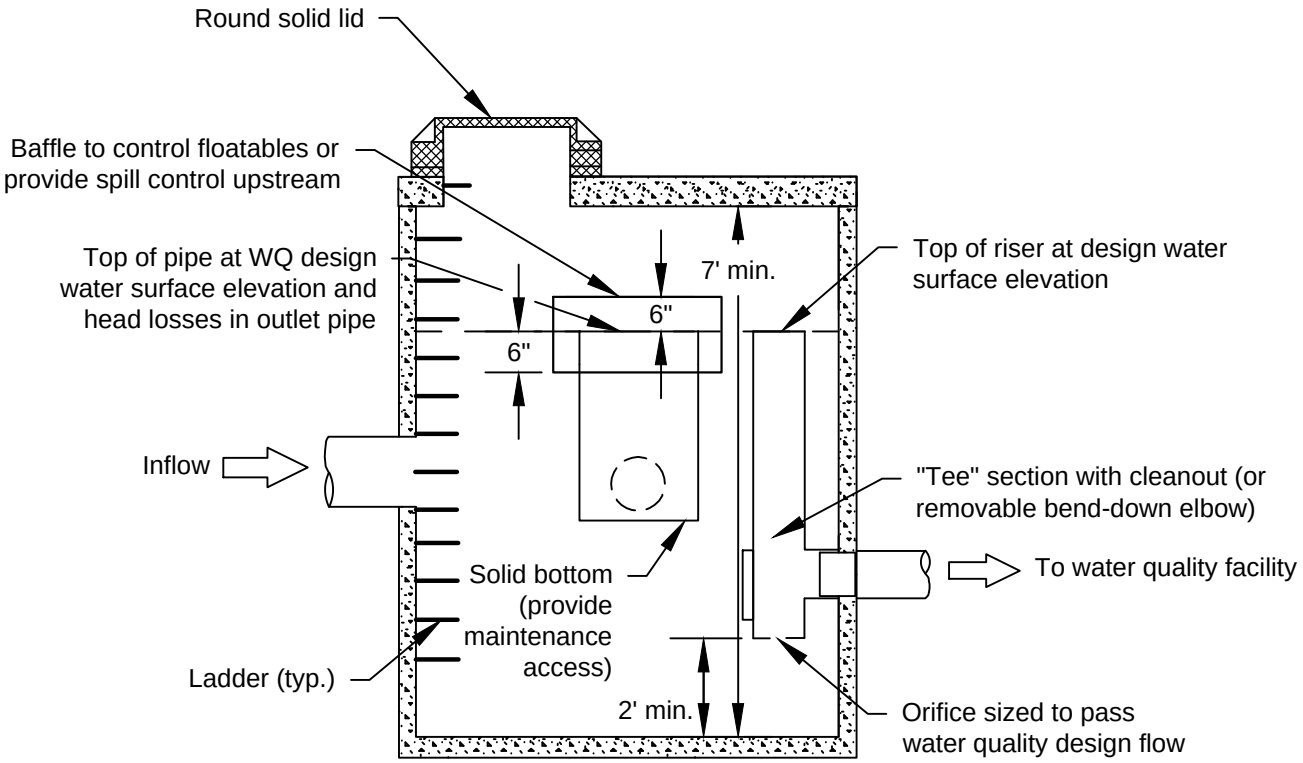

Section A-A

*Note: Diamter (d) of standpipe should be large enough to minimize head above water quality design water surface and to keep water quality design flows from increasing more than 10% during 100-year flows.

NOT TO SCALE

DEPARTMENT OF ECOLOGY
State of Washington

Figure V-8.5.4b
Flow Splitter, Option B

Revised February 2016

Please see *http://www.ecy.wa.gov/copyright.html* for copyright notice including permissions, limitation of liability, and disclaimer.

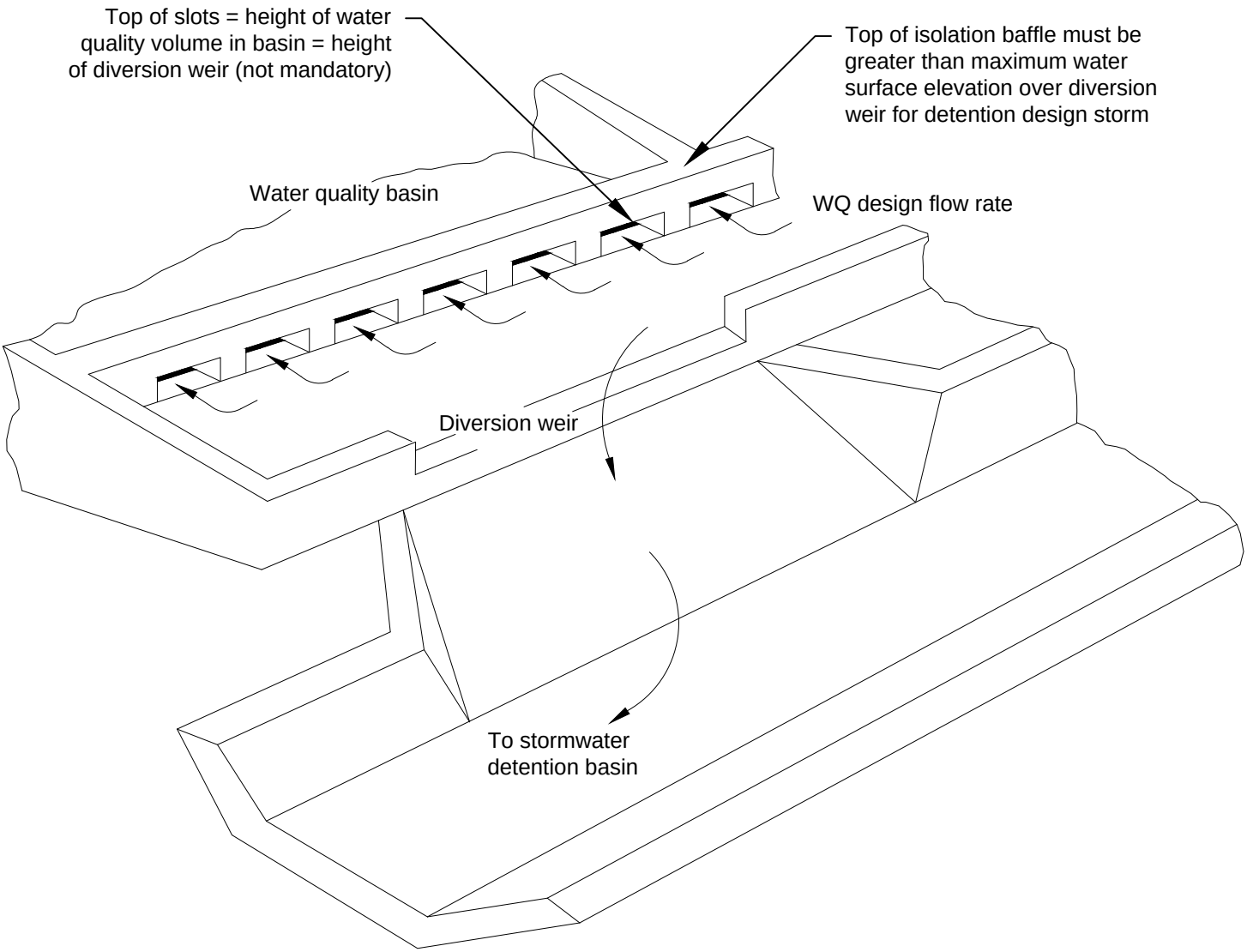

Source: City of Austin

NOT TO SCALE

DEPARTMENT OF ECOLOGY
State of Washington

Figure V-8.5.5
Example of Isolation/Diversion Structure

Revised February 2016

Please see *http://www.ecy.wa.gov/copyright.html* for copyright notice including permissions, limitation of liability, and disclaimer.

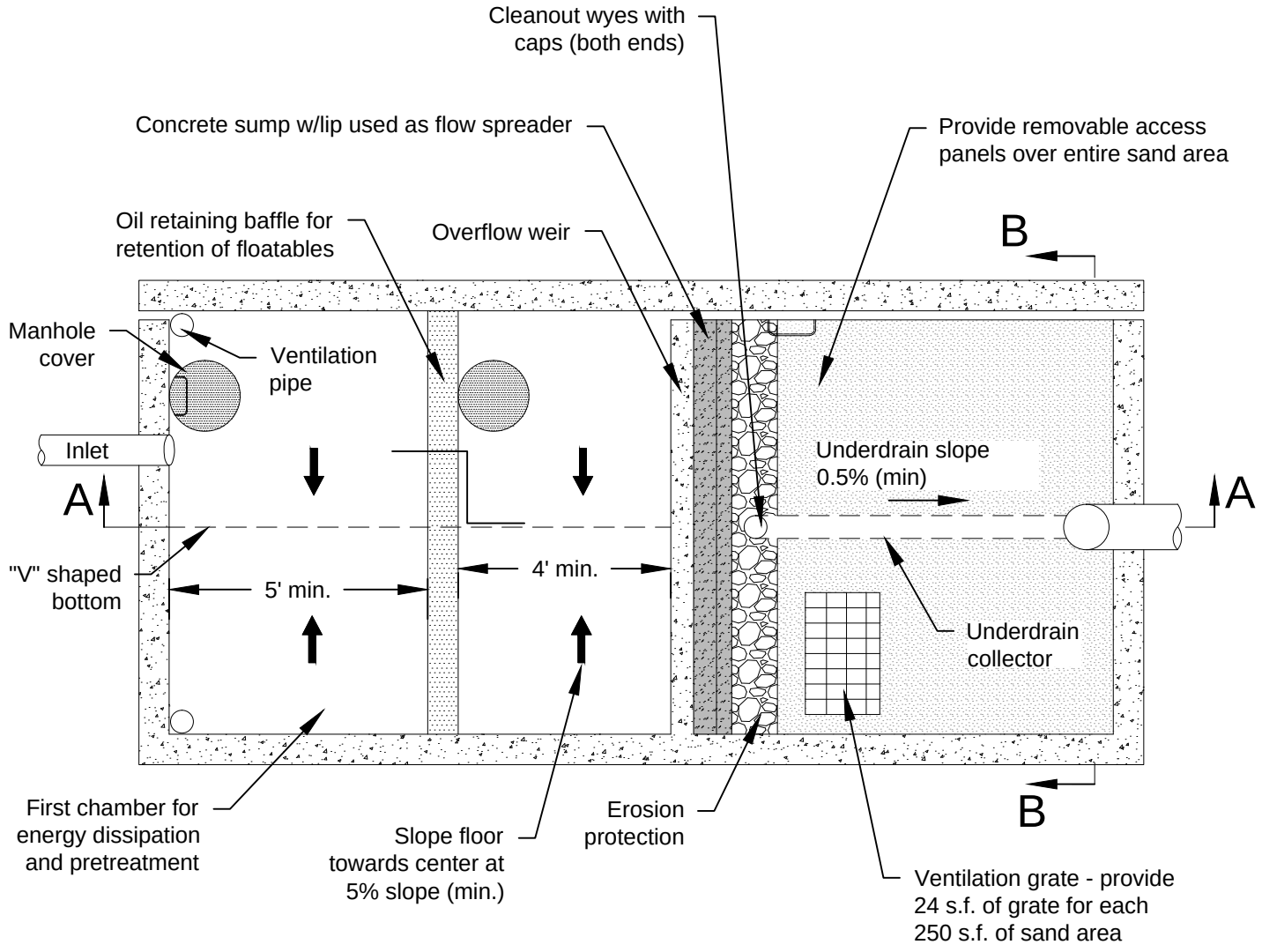

Plan View

NOT TO SCALE

DEPARTMENT OF ECOLOGY
State of Washington

Figure V-8.5.6a
Sand Filter Vault

Revised February 2016

Please see *http://www.ecy.wa.gov/copyright.html* for copyright notice including permissions, limitation of liability, and disclaimer.

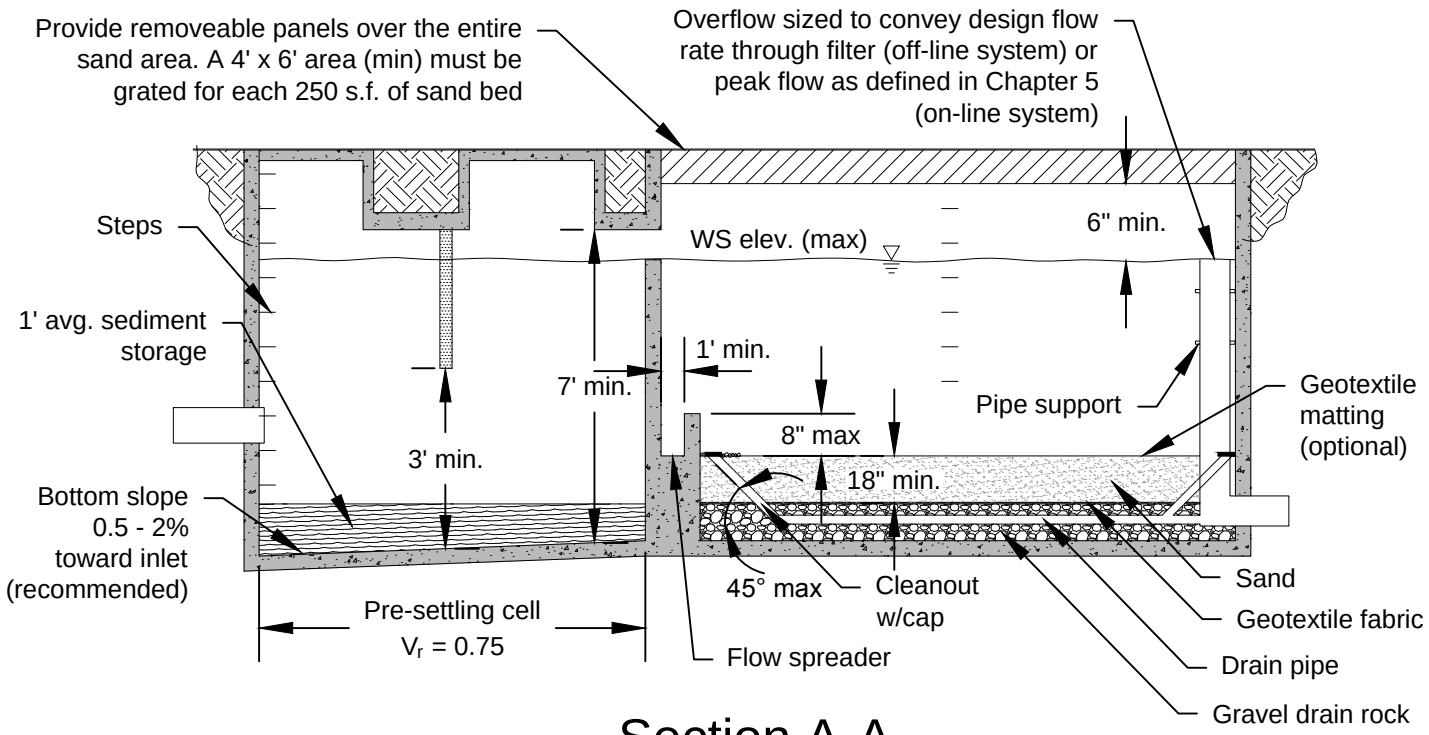

Section A-A

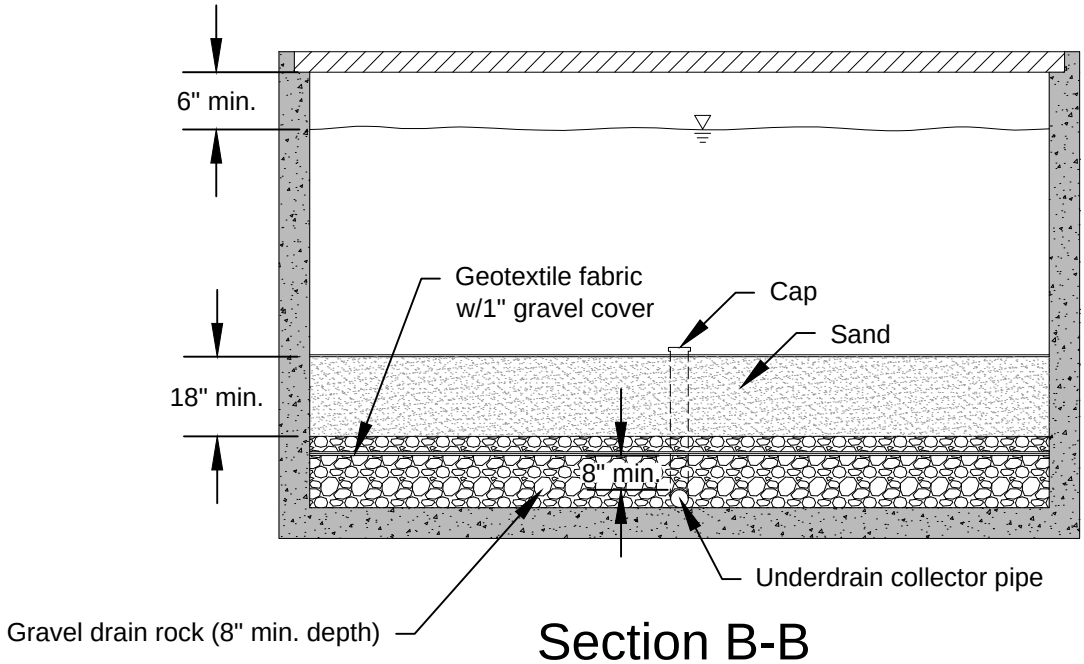

Section B-B

NOT TO SCALE

DEPARTMENT OF ECOLOGY
State of Washington

Figure V-8.5.6b
Sand Filter Vault (cont)

Revised February 2016

Please see *http://www.ecy.wa.gov/copyright.html* for copyright notice including permissions, limitation of liability, and disclaimer.

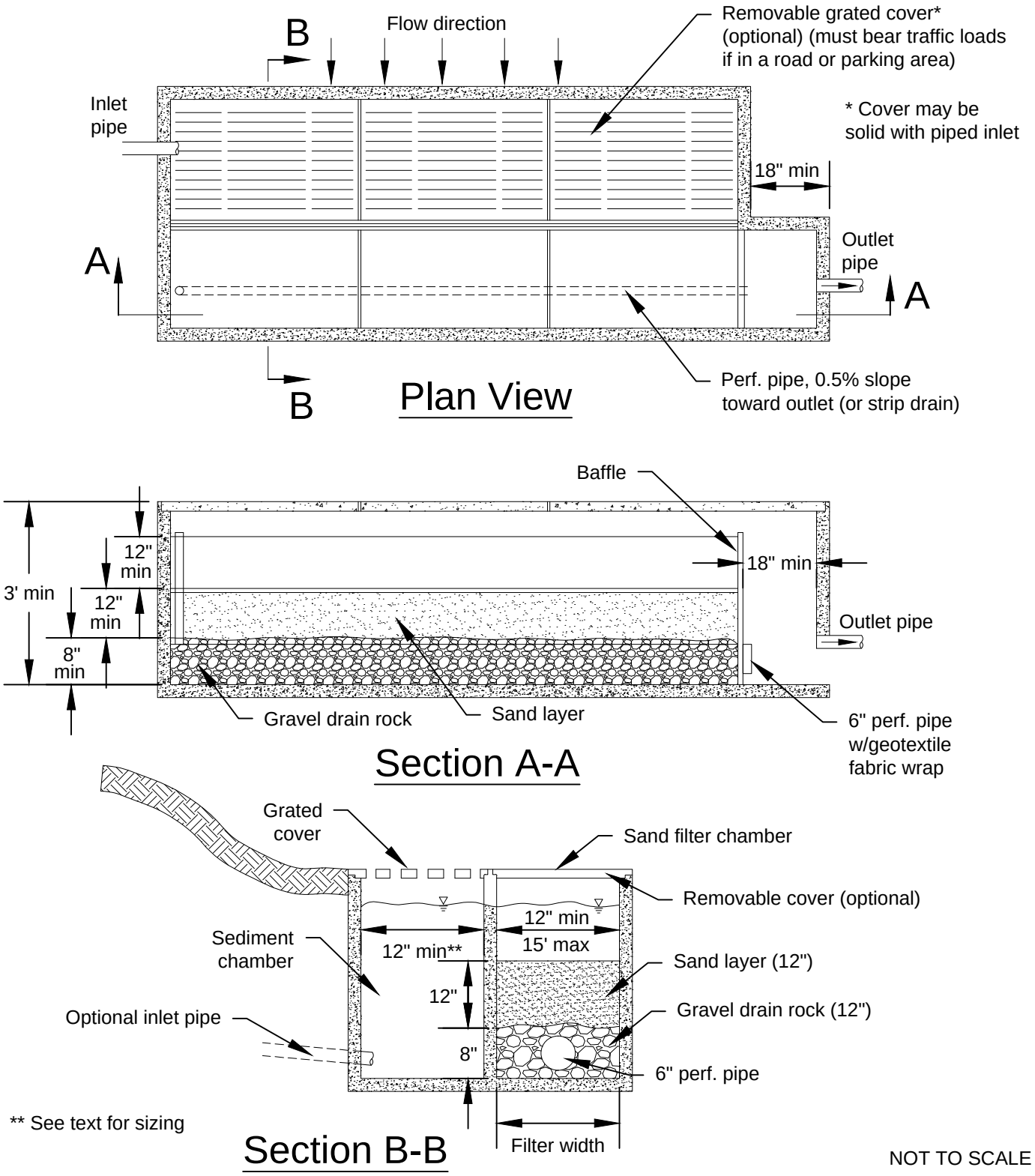

DEPARTMENT OF
ECOLOGY
State of Washington

Figure V-8.5.7
Linear Sand Filter

Revised February 2016

Please see *http://www.ecy.wa.gov/copyright.html* for copyright notice including permissions, limitation of liability, and disclaimer.

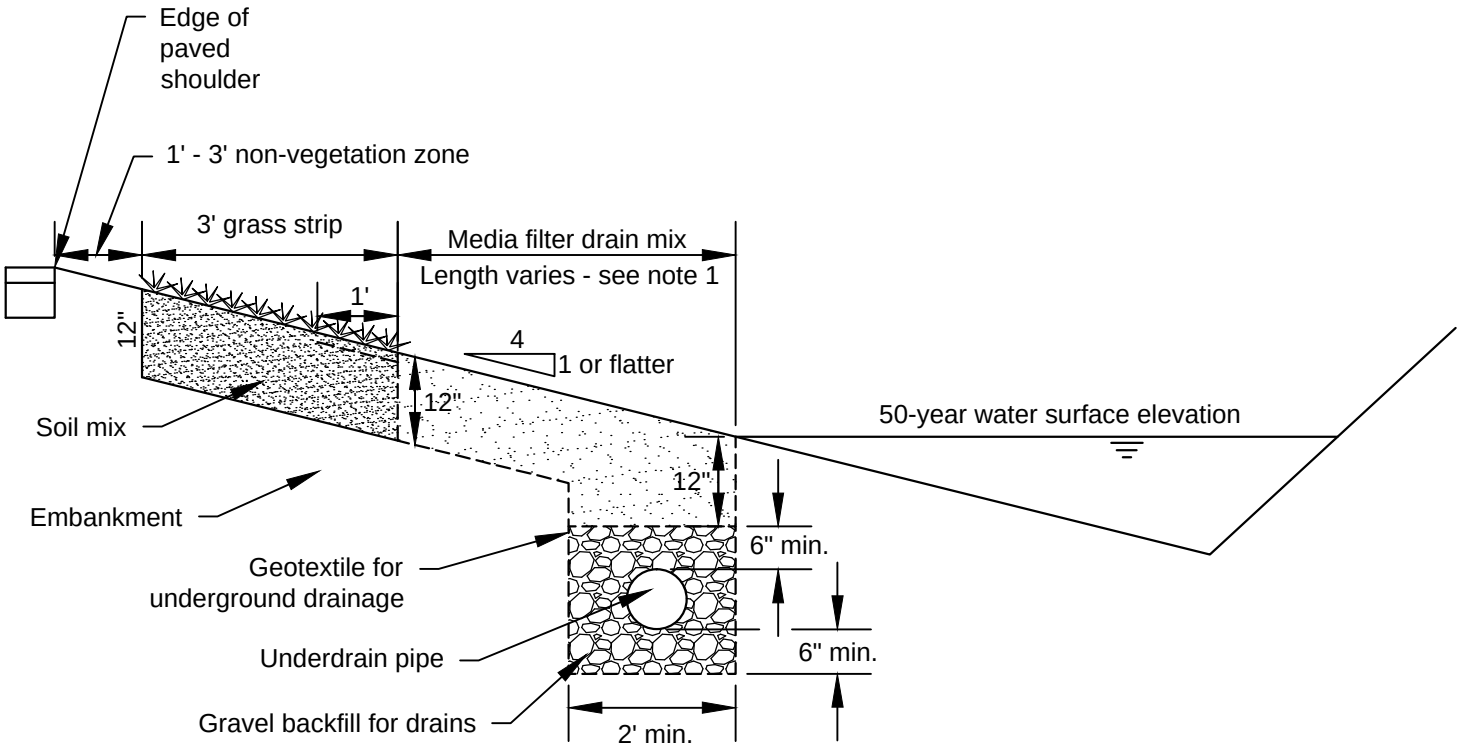

Notes:
1. See "structural design considerations"

Side Slope Application with Underdrain

This drawing is only a template and should be modified to fit each project application.

NOT TO SCALE

DEPARTMENT OF
ECOLOGY
State of Washington

Figure V-8.5.8
Media Filter Drain: Cross Section

Revised February 2016

Please see *http://www.ecy.wa.gov/copyright.html* for copyright notice including permissions, limitation of liability, and disclaimer.

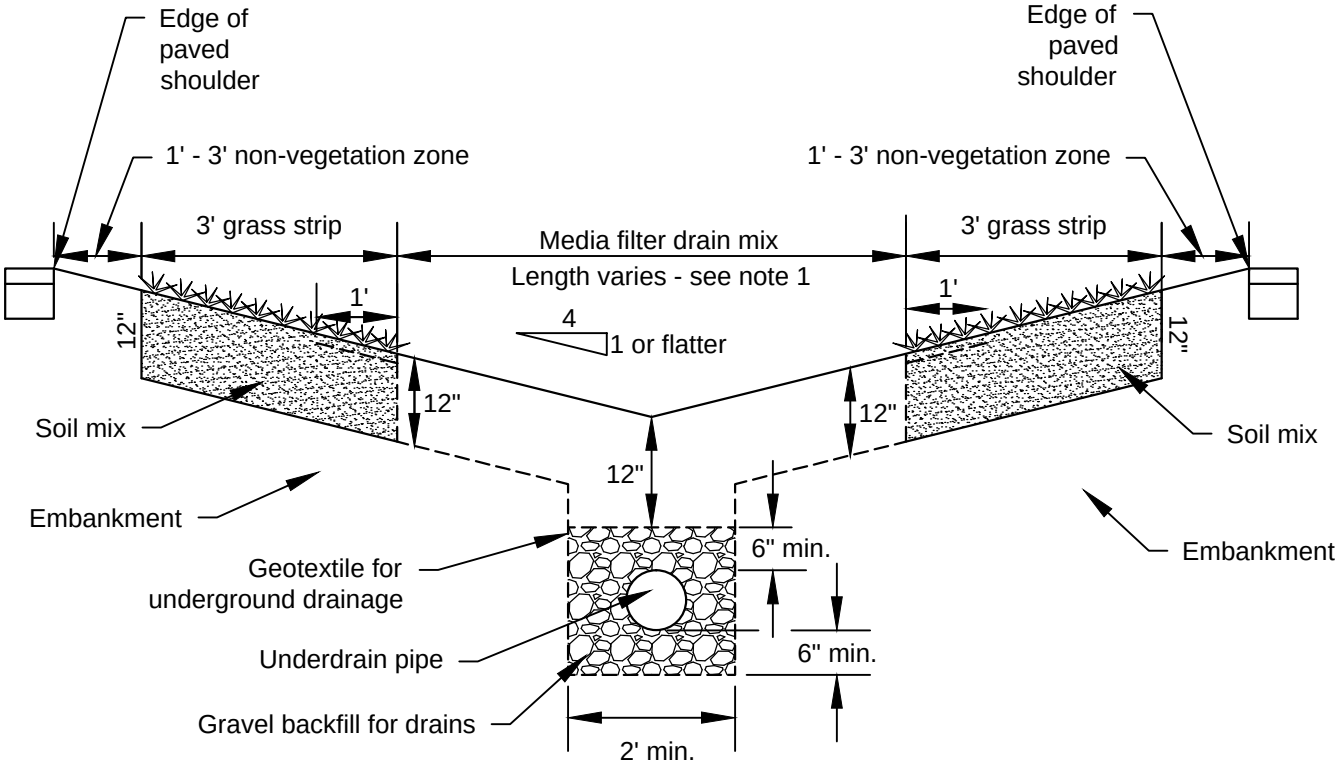

Notes:

1. See "structural design considerations"

Median Application

This drawing is only a template and should be modified to fit each project application.

NOT TO SCALE

DEPARTMENT OF ECOLOGY
State of Washington

Figure V-8.5.9
Dual Media Filter Drain: Cross Section

Revised February 2016

Please see *http://www.ecy.wa.gov/copyright.html* for copyright notice including permissions, limitation of liability, and disclaimer.

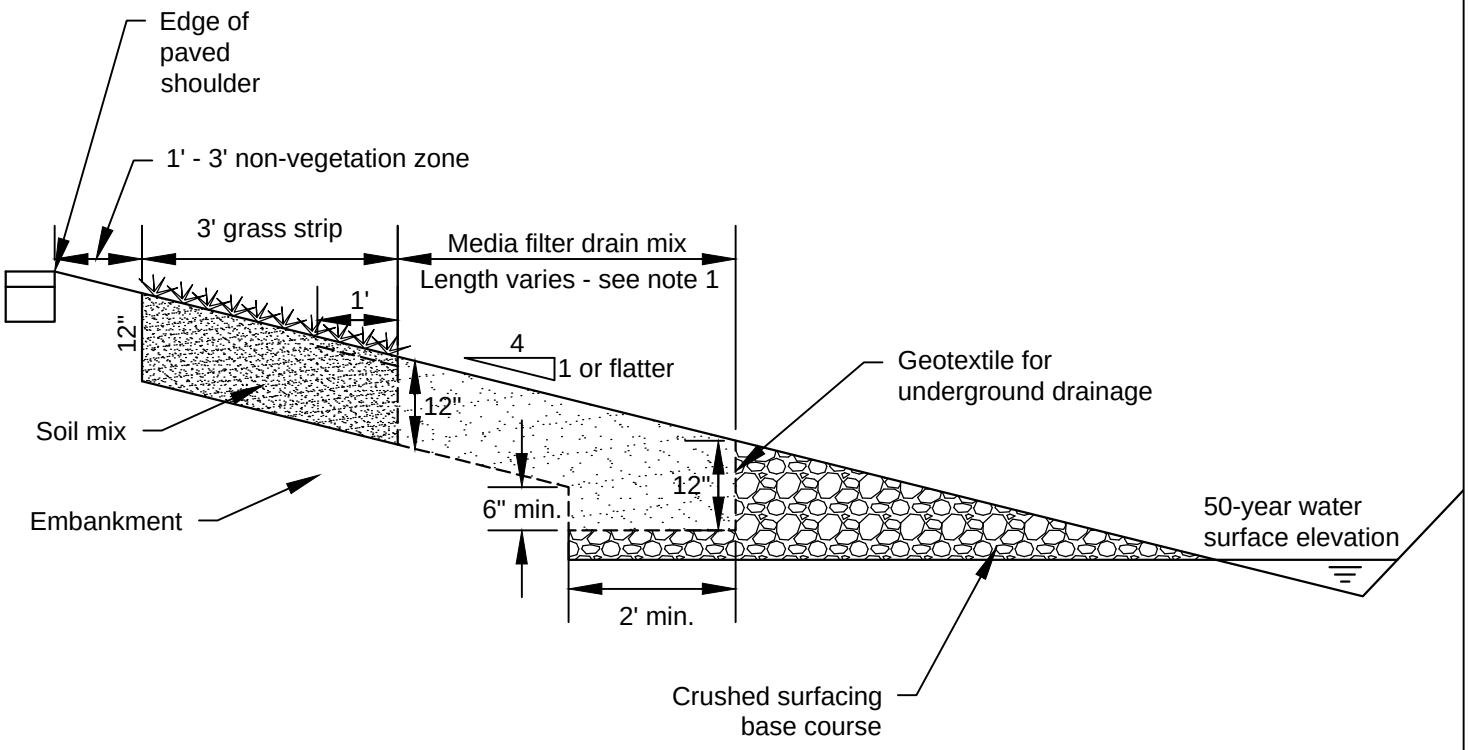

Notes:
1. See "structural design considerations"

Side Slope Application without Underdrain

This drawing is only a template and should be modified to fit each project application.

NOT TO SCALE

DEPARTMENT OF
ECOLOGY
State of Washington

Figure V-8.5.10
Media Filter Drain without Underdrain Trench

Revised February 2016

Please see *http://www.ecy.wa.gov/copyright.html* for copyright notice including permissions, limitation of liability, and disclaimer.

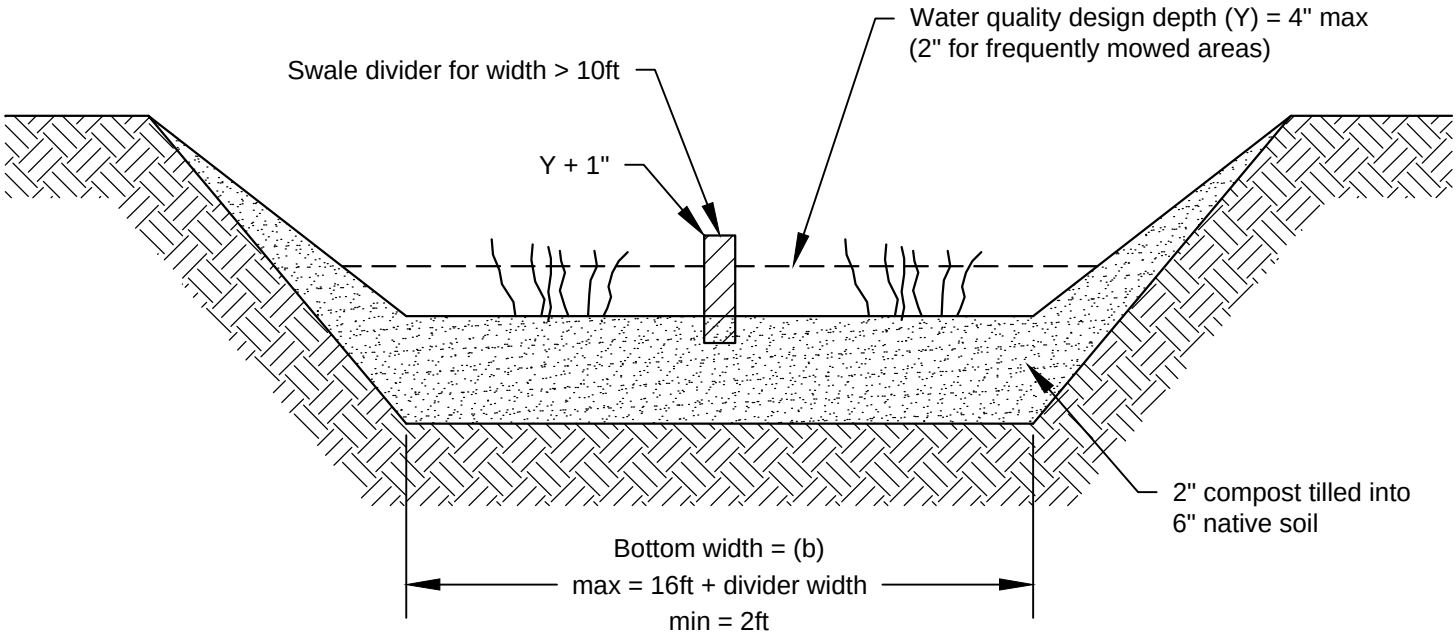

NOT TO SCALE

DEPARTMENT OF
ECOLOGY
State of Washington

Figure V-9.4.1
Typical Swale Section

Revised February 2016

Please see *http://www.ecy.wa.gov/copyright.html* for copyright notice including permissions, limitation of liability, and disclaimer.

Underdrain for slopes < 1.5%

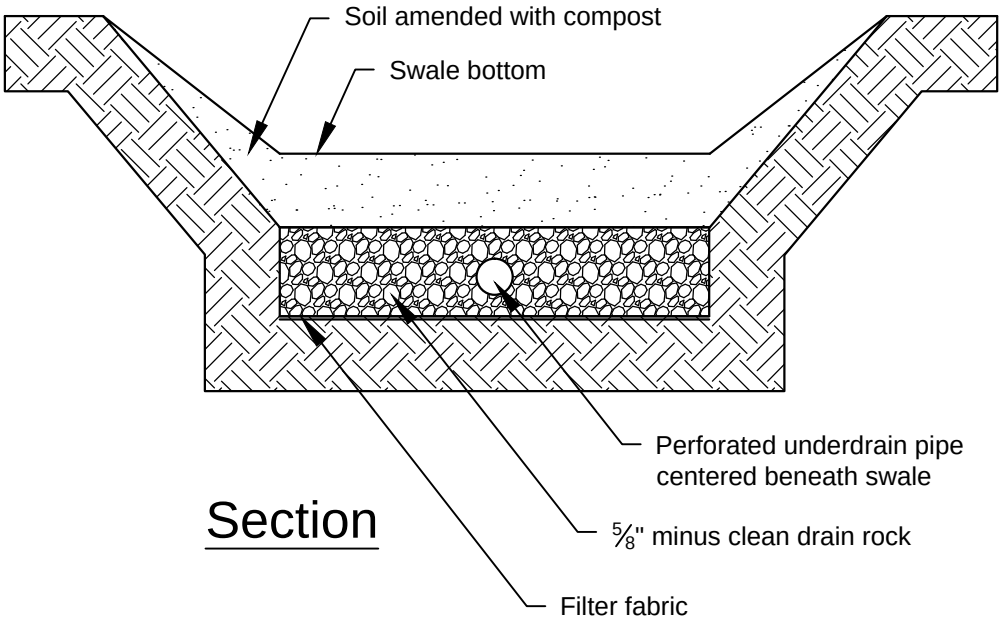

Section

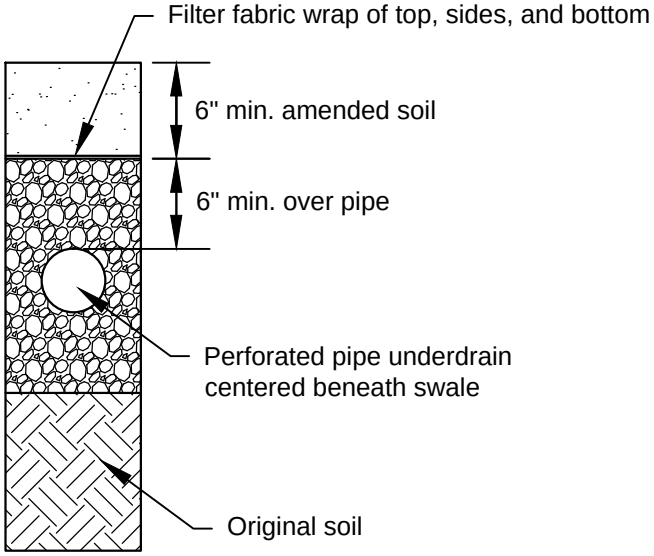

Detail A

Note: Underdrain must infiltrate or drain freely to an acceptable discharge point.

NOT TO SCALE

DEPARTMENT OF ECOLOGY
State of Washington

Figure V-9.4.2
Biofiltration Swale Underdrain Detail

Revised February 2016

Please see *http://www.ecy.wa.gov/copyright.html* for copyright notice including permissions, limitation of liability, and disclaimer.

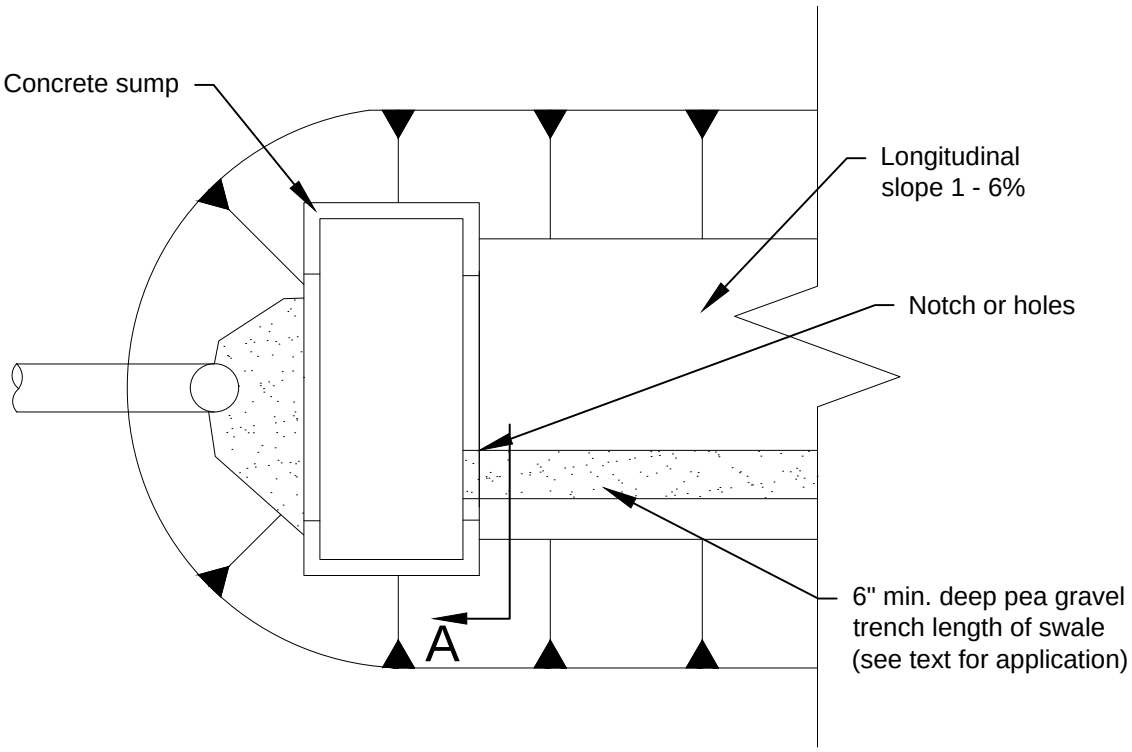

Plan View

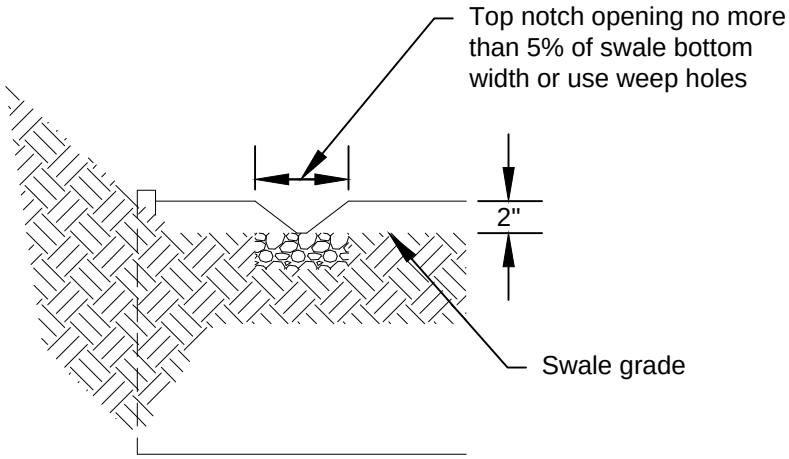

Section A

NOT TO SCALE

DEPARTMENT OF ECOLOGY
State of Washington

Figure V-9.4.3
Biofiltration Swale Low-Flow Drain Detail

Revised February 2016

Please see *http://www.ecy.wa.gov/copyright.html* for copyright notice including permissions, limitation of liability, and disclaimer.

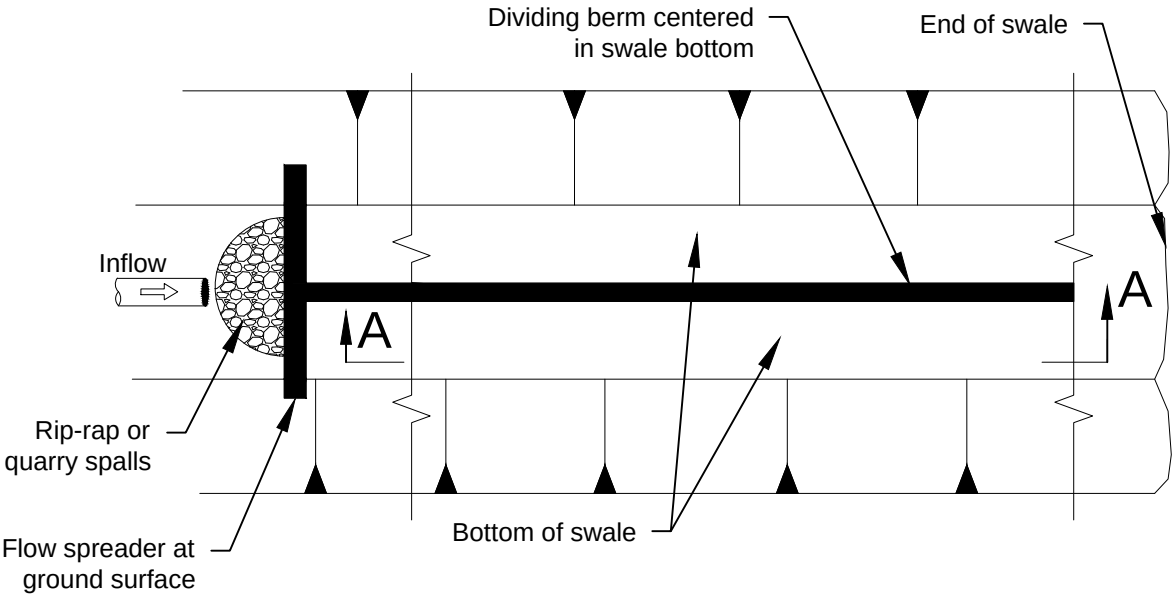

Plan View

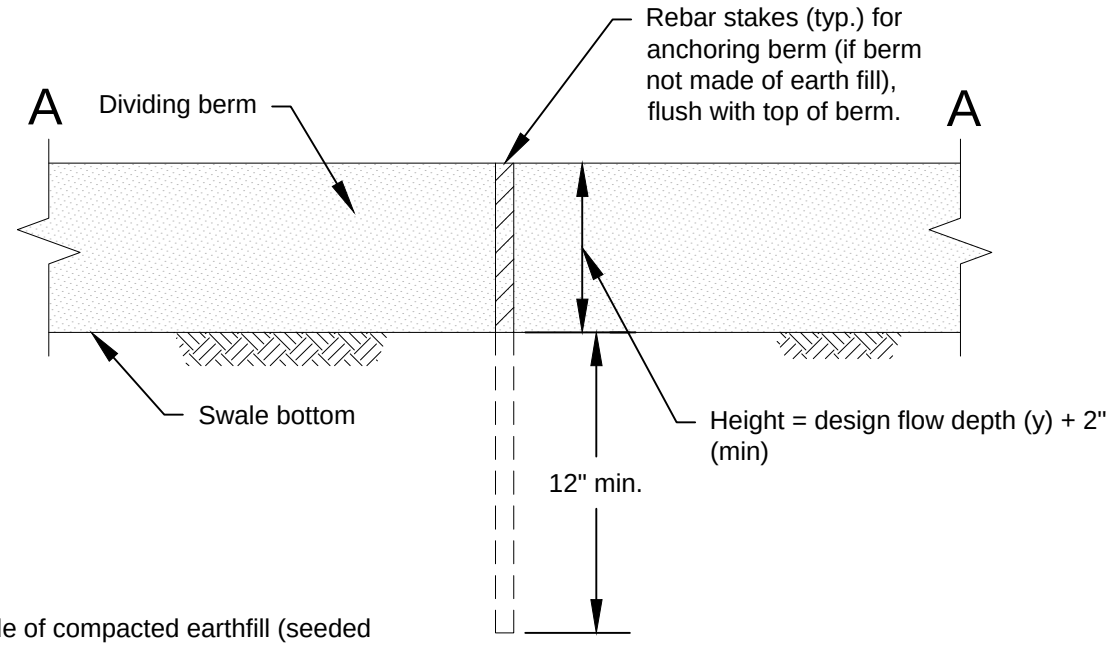

Section A-A

Notes:

1. Berm may be made of compacted earthfill (seeded with grass), timber, concrete plastic, or similar weather-resistant non-erodible material.

2. Rebar stakes or similar berm anchoring materials needed if berm made of timber, plastic, or concrete curbing - stake placement required at both ends of each individual member (at a minimum).

NOT TO SCALE

DEPARTMENT OF ECOLOGY
State of Washington

Figure V-9.4.4
Swale Dividing Berm

Revised February 2016

Please see *http://www.ecy.wa.gov/copyright.html* for copyright notice including permissions, limitation of liability, and disclaimer.

Source: Livingston, et al, 1984

NOT TO SCALE

Channel Geometry

V-Shape

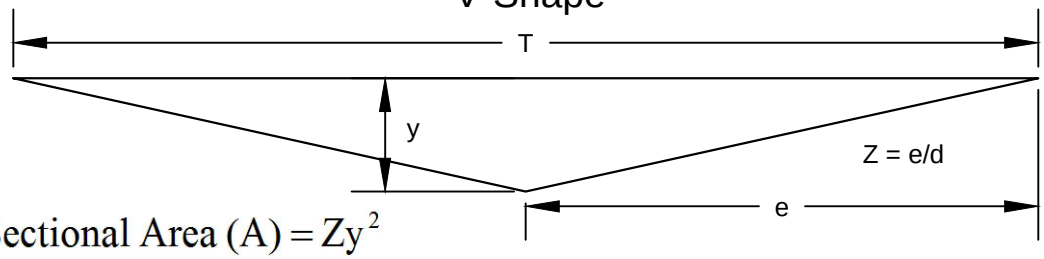

$$\text{Cross-Sectional Area (A)} = Zy^2$$

$$\text{Top Width (T)} = 2yZ$$

$$\text{Hydraulic Radius (R)} = \frac{Zy}{2\sqrt{Z^2+1}}$$

Parabolic Shape

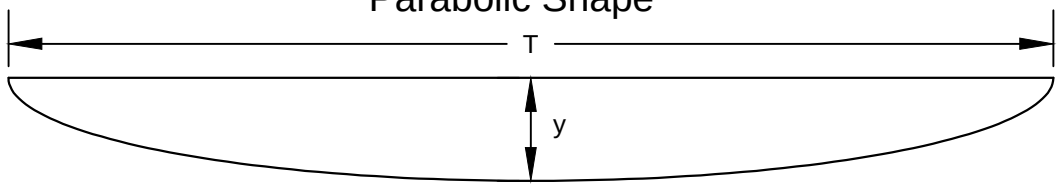

$$\text{Cross-Sectional Area (A)} = \frac{2}{3}Ty$$

$$\text{Top Width (T)} = \frac{1.5A}{y}$$

$$\text{Hydraulic Radius (R)} = \frac{T^2y}{1.5T^2+4y^2}$$

Trapezoidal Shape

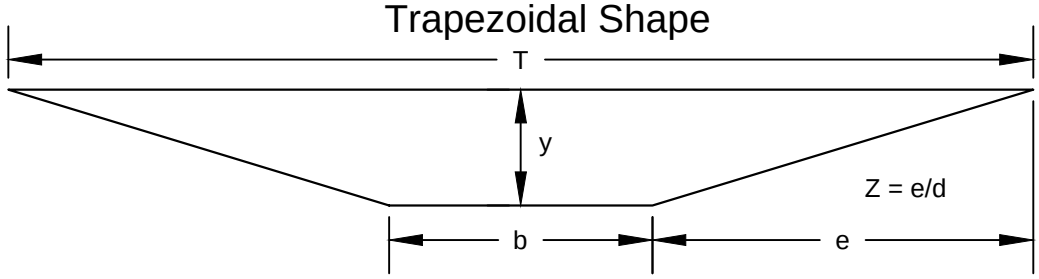

$$\text{Cross-Sectional Area (A)} = by + Zy^2$$

$$\text{Top Width (T)} = b + 2yz$$

$$\text{Hydraulic Radius (R)} = \frac{by+Zy^2}{b+2y\sqrt{Z^2+1}}$$

DEPARTMENT OF ECOLOGY
State of Washington

Figure V-9.4.5
Geometric Formulas for Common Swale Shapes

Revised February 2016

Please see *http://www.ecy.wa.gov/copyright.html* for copyright notice including permissions, limitation of liability, and disclaimer.

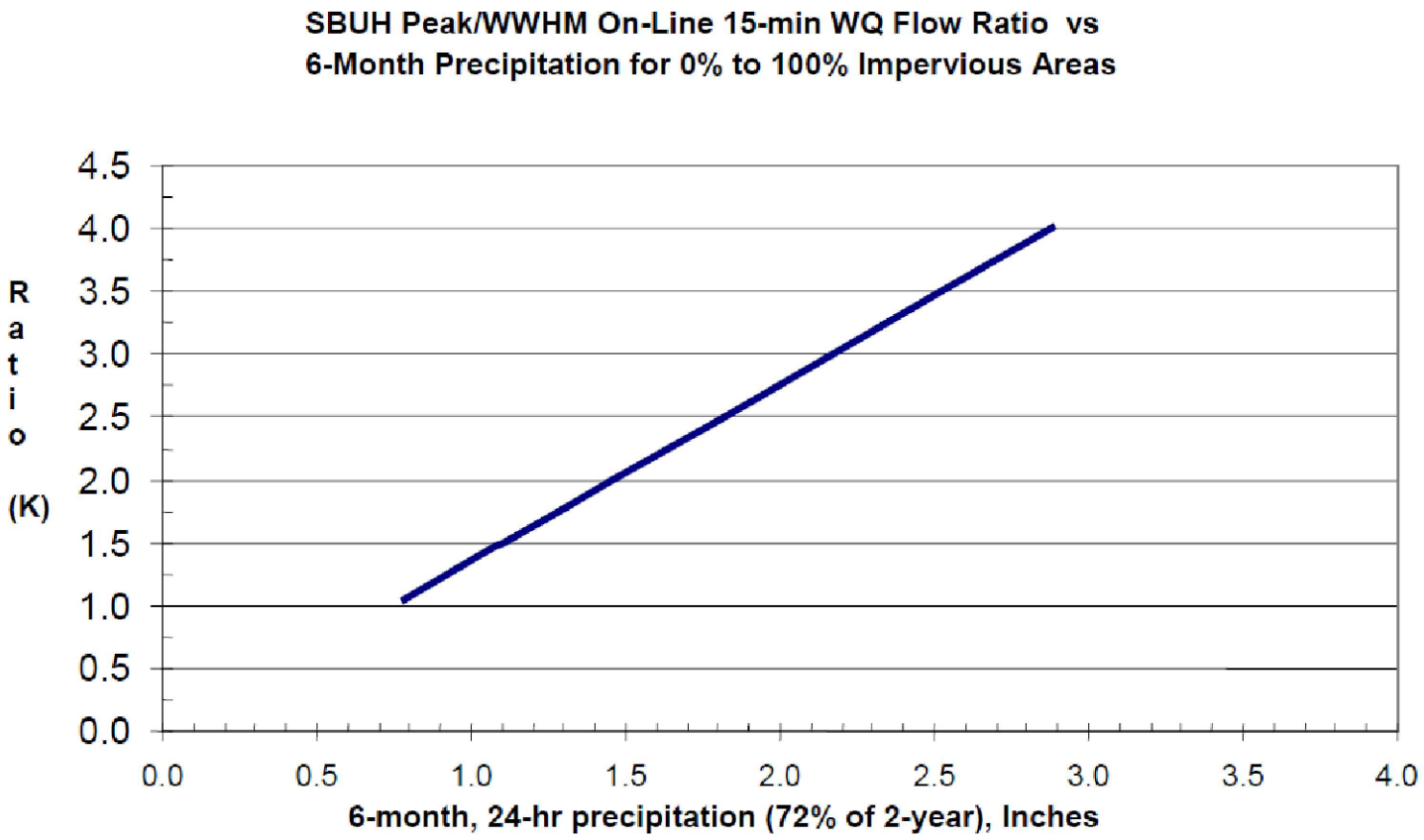

NOT TO SCALE

DEPARTMENT OF
ECOLOGY
State of Washington

Figure V-9.4.6a
Ratio of SBUH Peak/WQ Flow

Revised February 2016

Please see *http://www.ecy.wa.gov/copyright.html* for copyright notice including permissions, limitation of liability, and disclaimer.

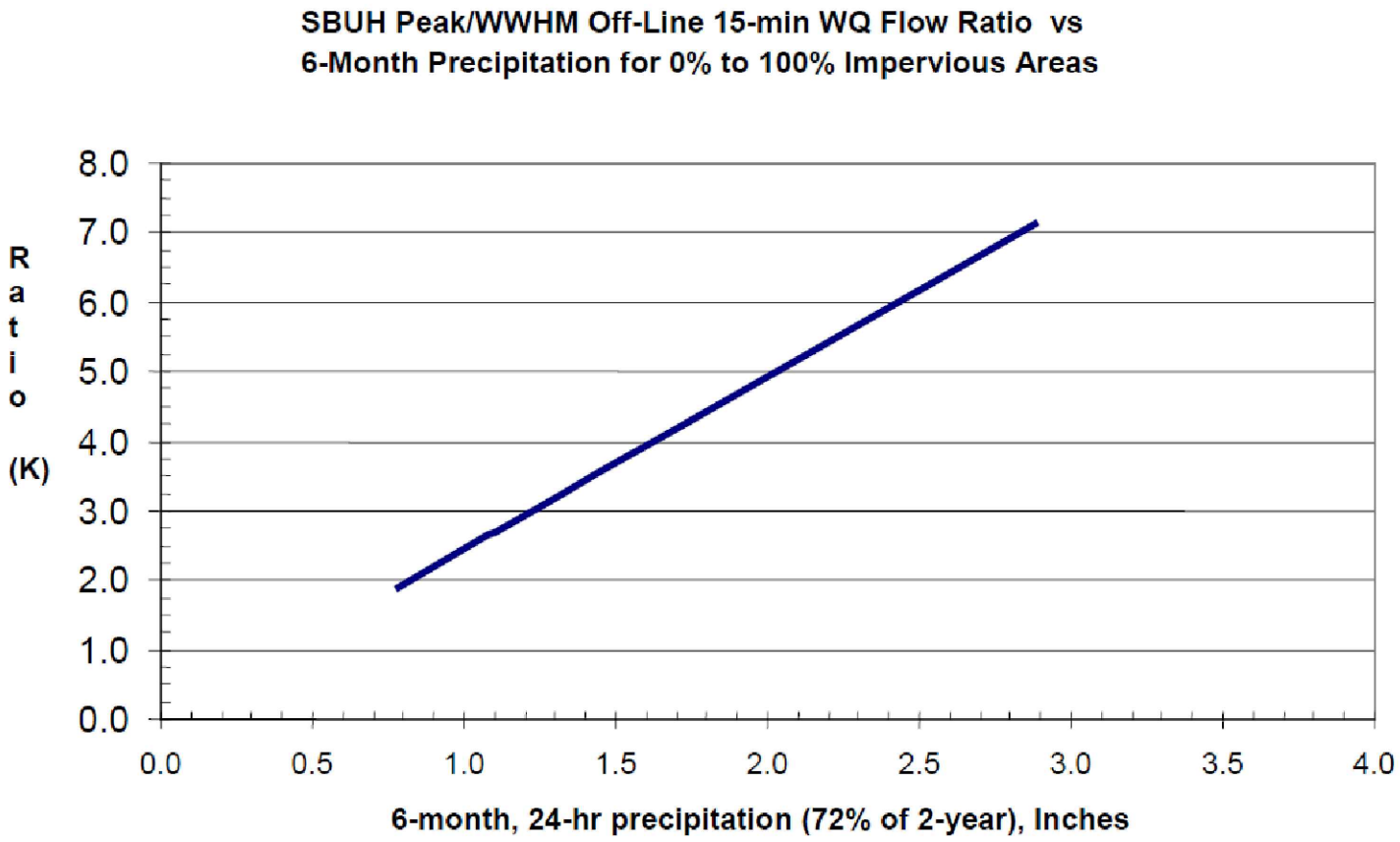

NOT TO SCALE

DEPARTMENT OF
ECOLOGY
State of Washington

Figure V-9.4.6b
Ratio of SBUH Peak/WQ Flow

Revised February 2016

Please see *http://www.ecy.wa.gov/copyright.html* for copyright notice including permissions, limitation of liability, and disclaimer.

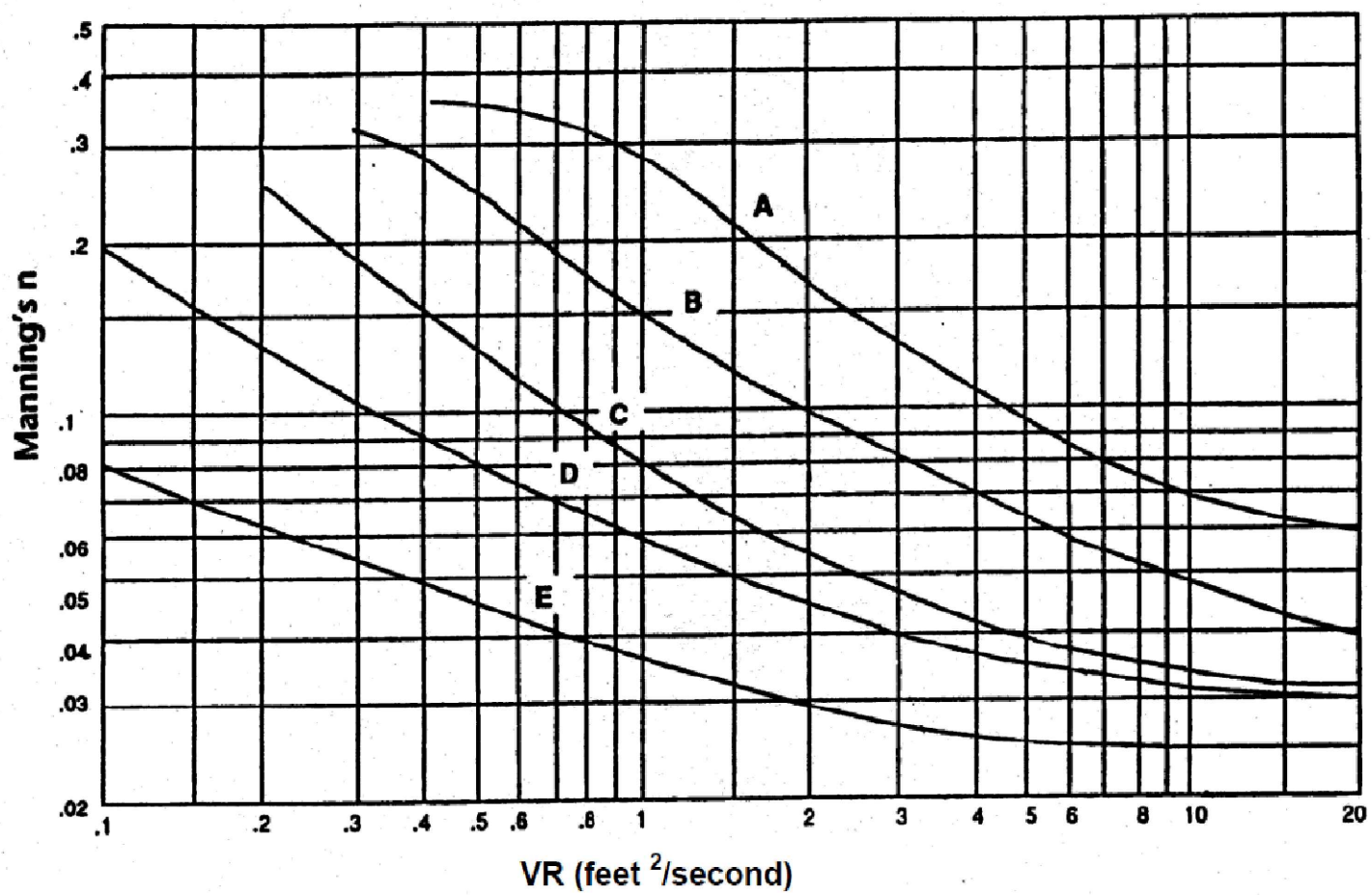

Note: VR is the product of velocity and hydraulic radius

Source: Livingston, et al, 1984

NOT TO SCALE

DEPARTMENT OF ECOLOGY State of Washington

Figure V-9.4.7
The Relationship of Manning's n with VR for Various Degrees of Flow Retardance (A-E)

Revised February 2015

Please see *http://www.ecy.wa.gov/copyright.html* for copyright notice including permissions, limitation of liability, and disclaimer.

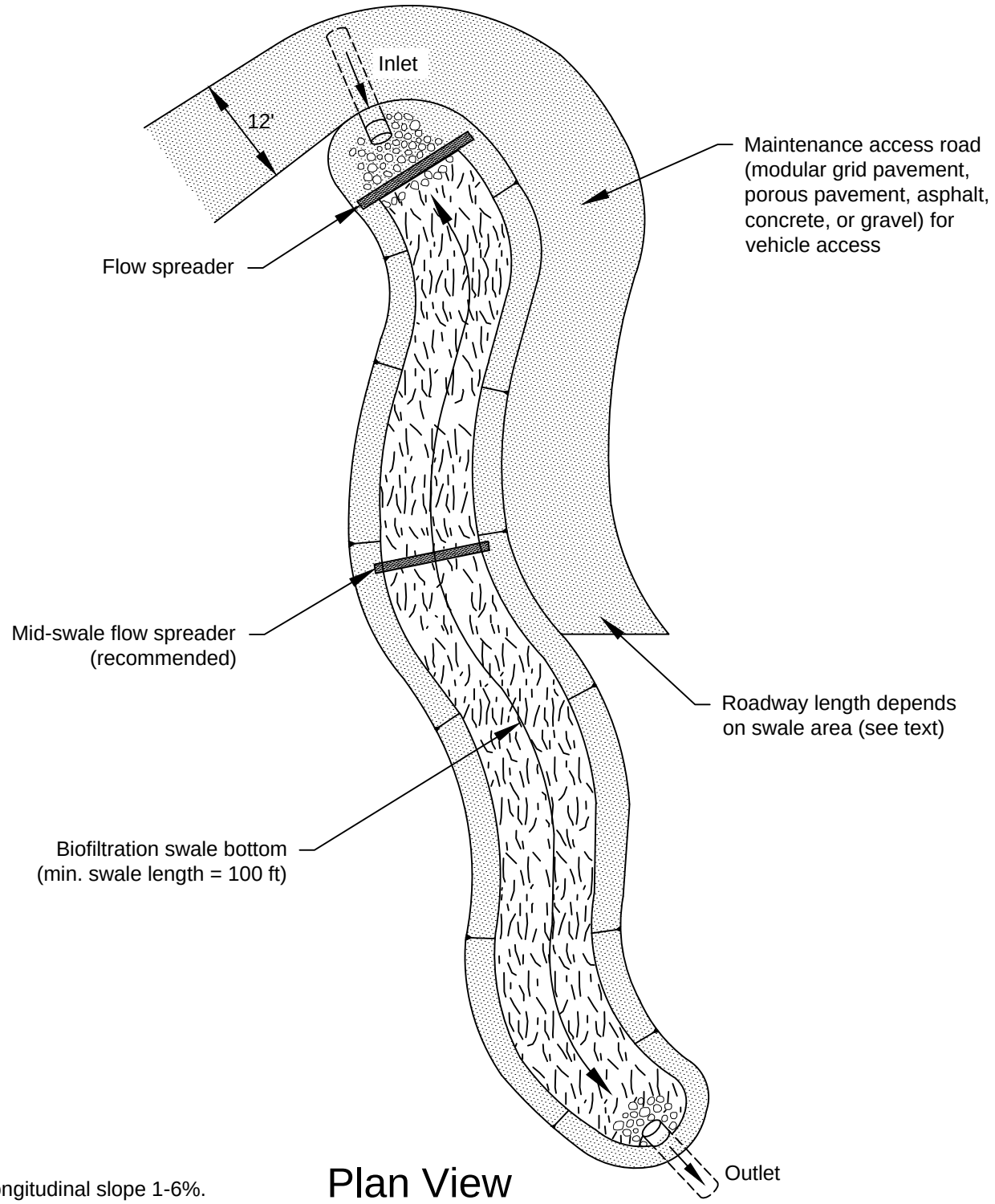

Plan View

Note: Longitudinal slope 1-6%.
Provide underdrain for slopes <1.5%.

NOT TO SCALE

DEPARTMENT OF ECOLOGY
State of Washington

Figure V-9.4.8
Biofiltration Swale Access Features

Revised February 2016

Please see *http://www.ecy.wa.gov/copyright.html* for copyright notice including permissions, limitation of liability, and disclaimer.

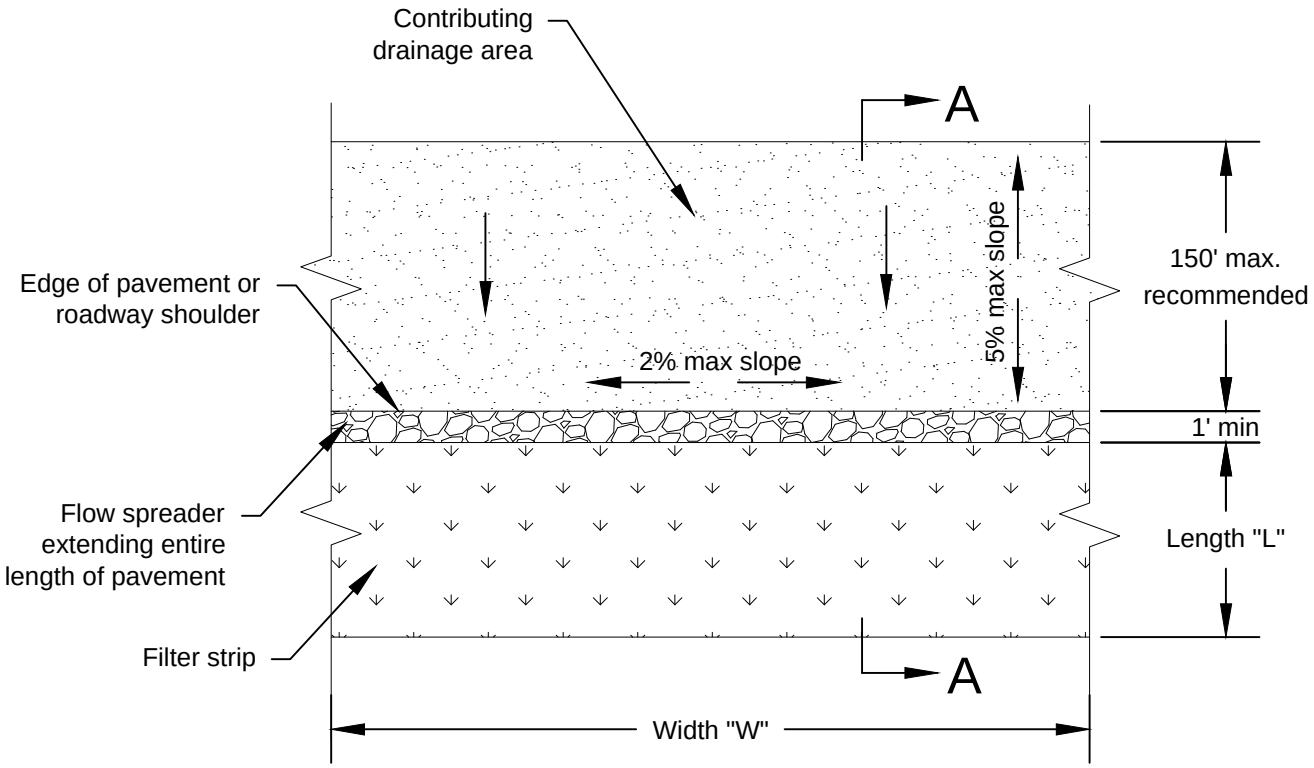

Plan View

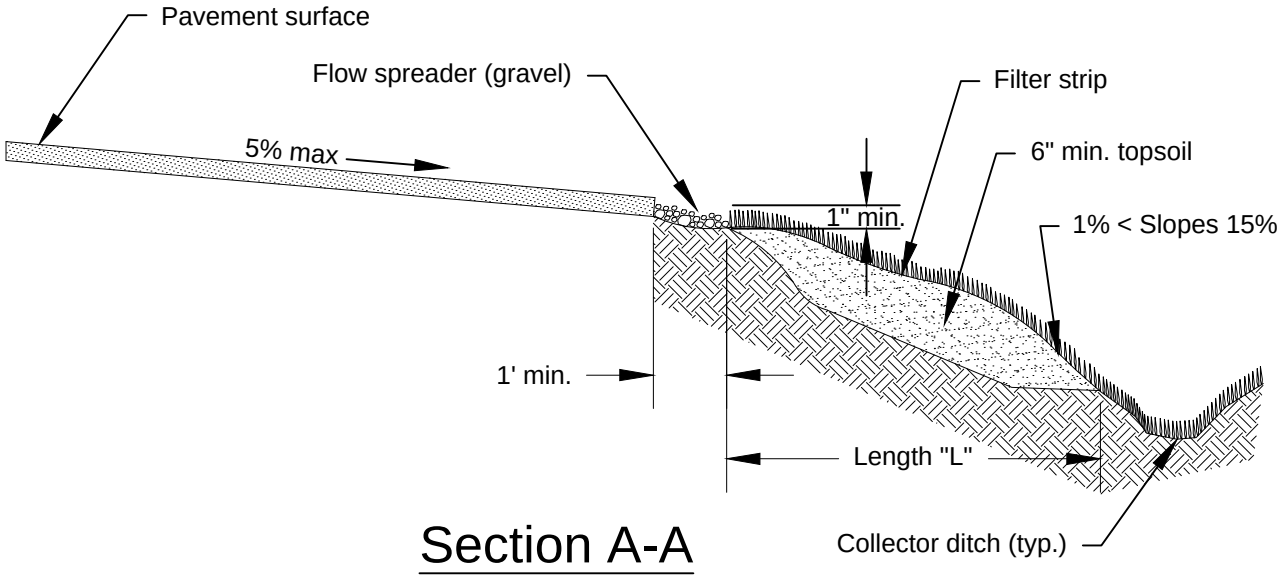

Section A-A

NOT TO SCALE

DEPARTMENT OF ECOLOGY State of Washington

Figure V-9.4.9
Typical Filter Strip

Revised February 2016

Please see *http://www.ecy.wa.gov/copyright.html* for copyright notice including permissions, limitation of liability, and disclaimer.

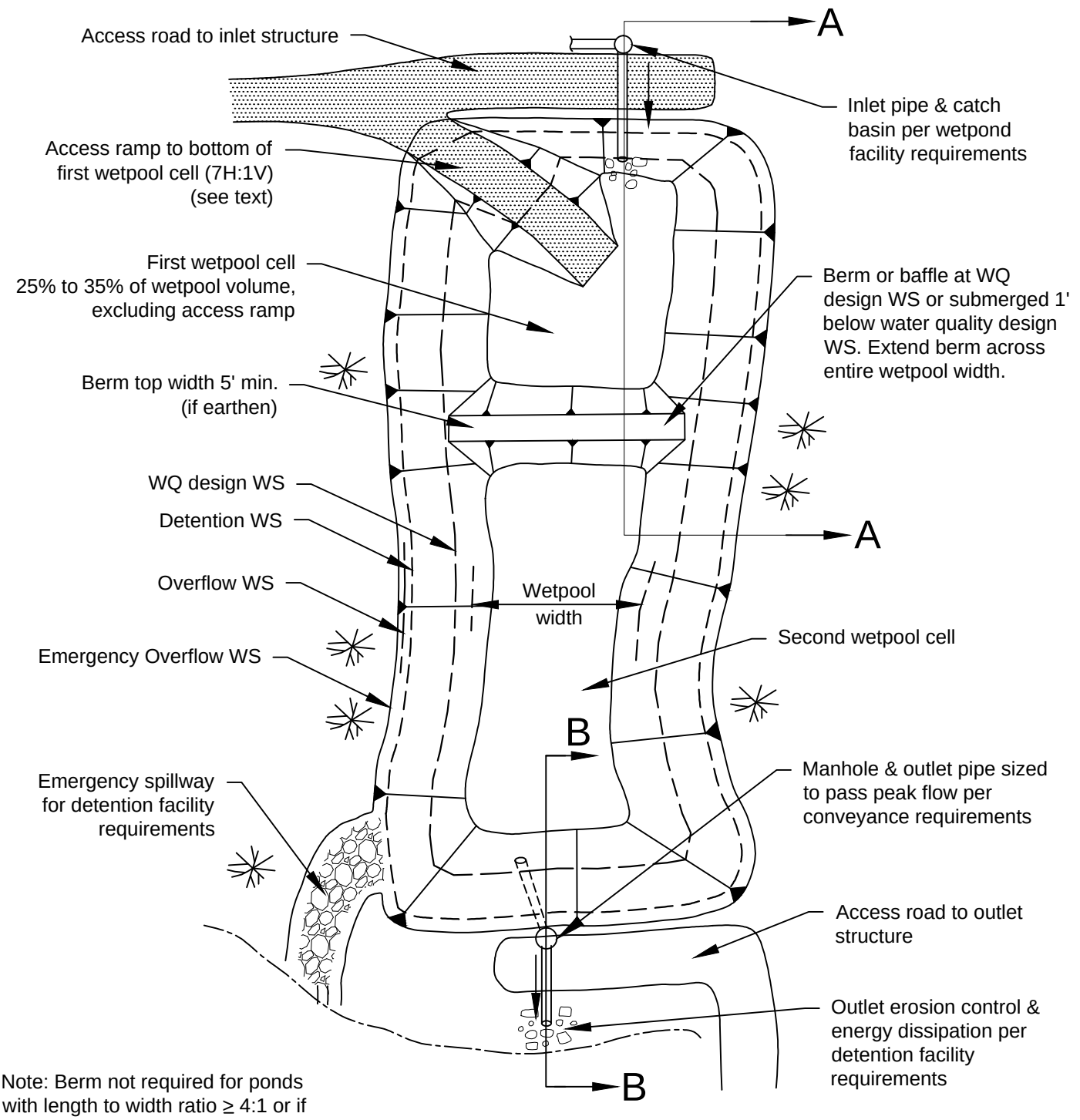

Note: Berm not required for ponds with length to width ratio ≥ 4:1 or if volume less than 4000c.f.

Plan View

NOT TO SCALE

DEPARTMENT OF ECOLOGY
State of Washington

Figure V-10.3.1a
Wetpond

Revised February 2016

Please see *http://www.ecy.wa.gov/copyright.html* for copyright notice including permissions, limitation of liability, and disclaimer.

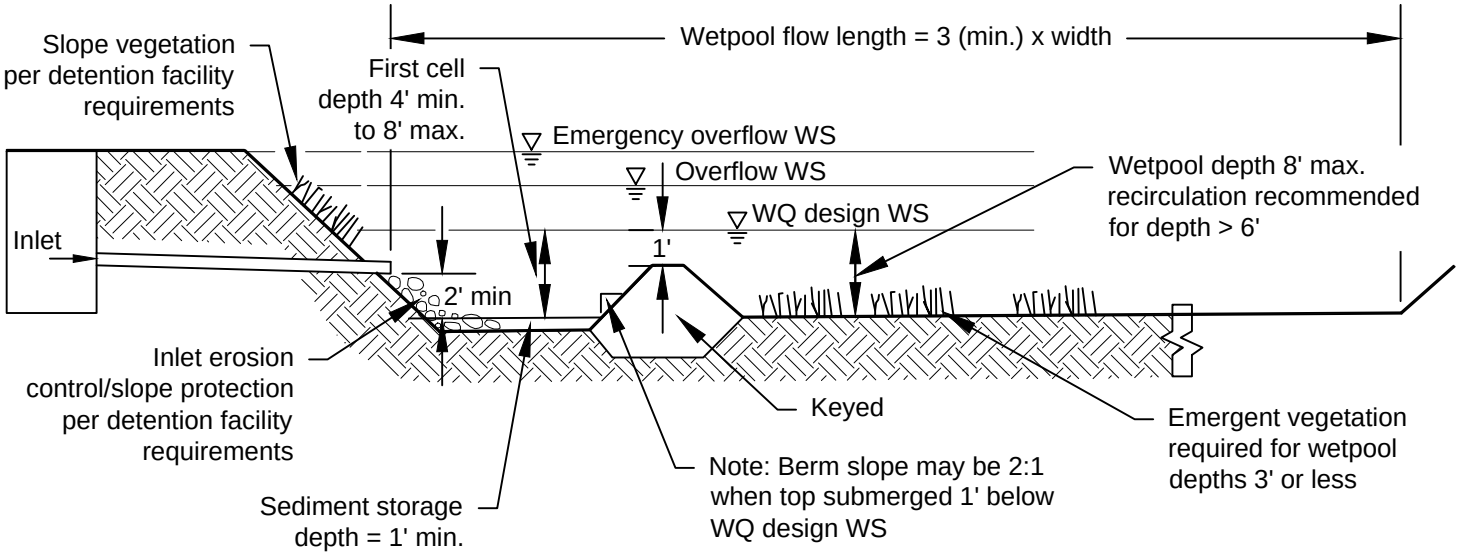

Section A-A

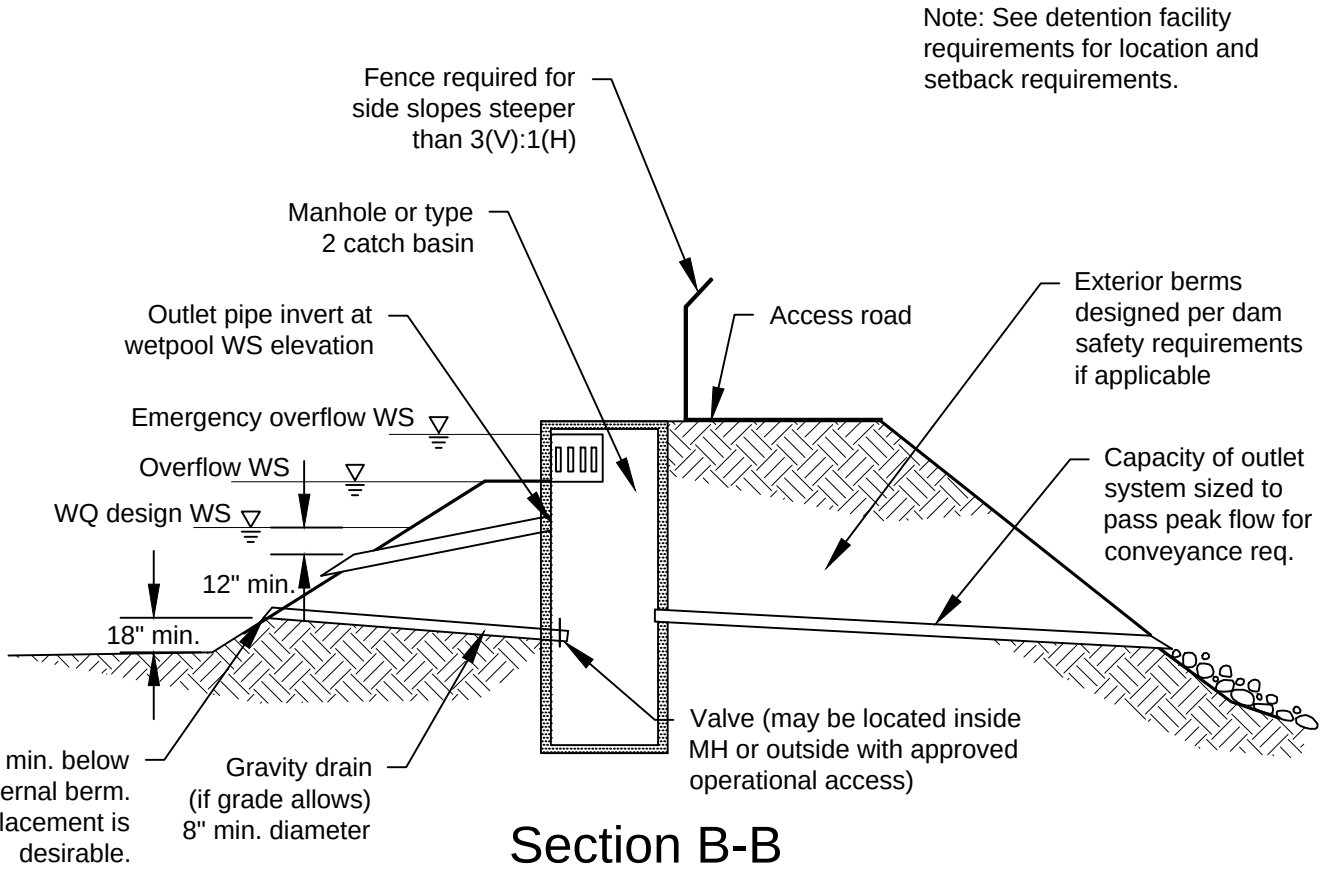

Section B-B

NOT TO SCALE

DEPARTMENT OF ECOLOGY
State of Washington

Figure V-10.3.1b
Wetpond

Revised February 2016

Please see *http://www.ecy.wa.gov/copyright.html* for copyright notice including permissions, limitation of liability, and disclaimer.

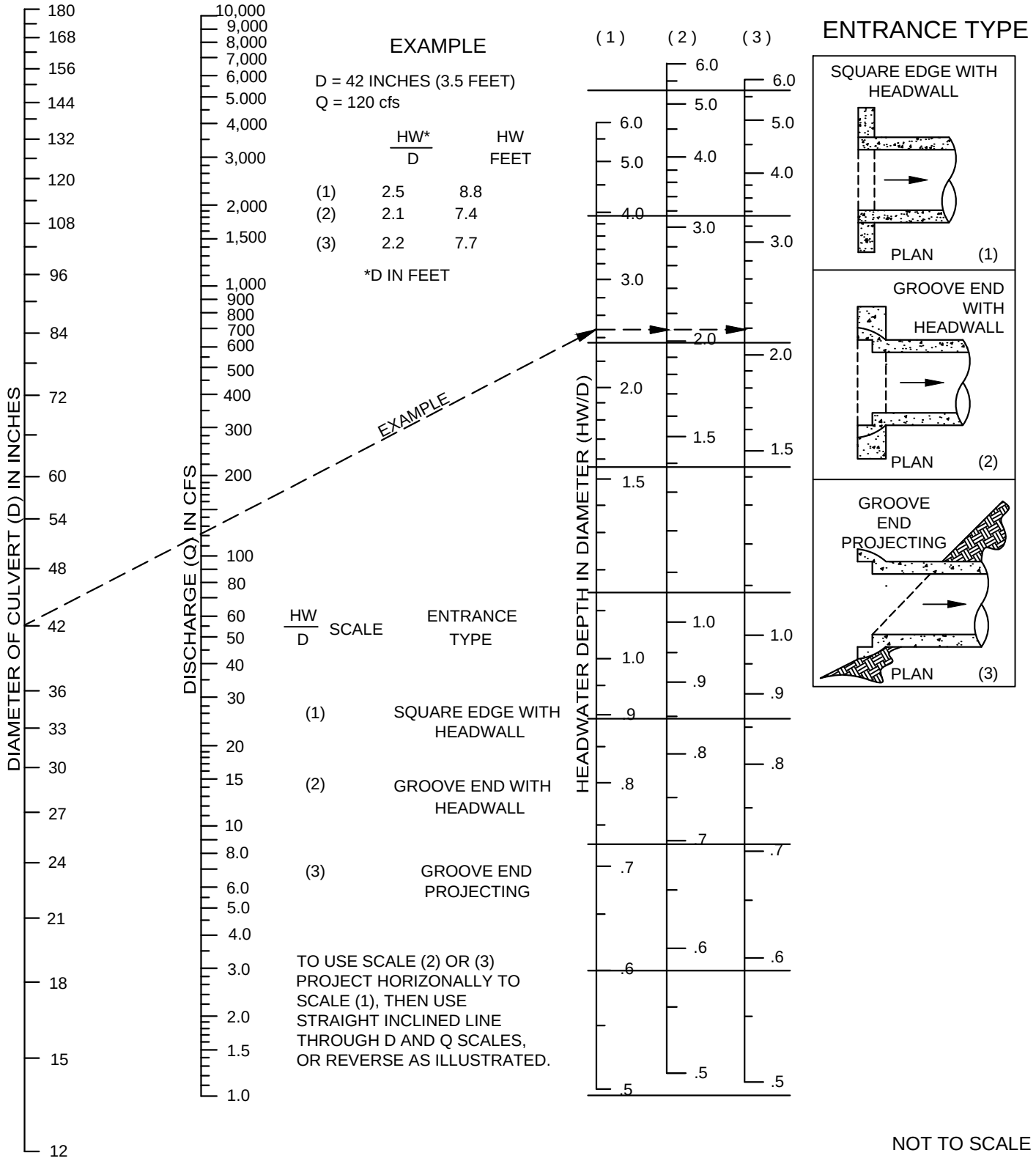

DEPARTMENT OF ECOLOGY
State of Washington

Figure V-10.3.2
Headwater Depth for Smooth Interior Pipe Culverts with Inlet Control

Revised February 2016

Please see *http://www.ecy.wa.gov/copyright.html* for copyright notice including permissions, limitation of liability, and disclaimer.

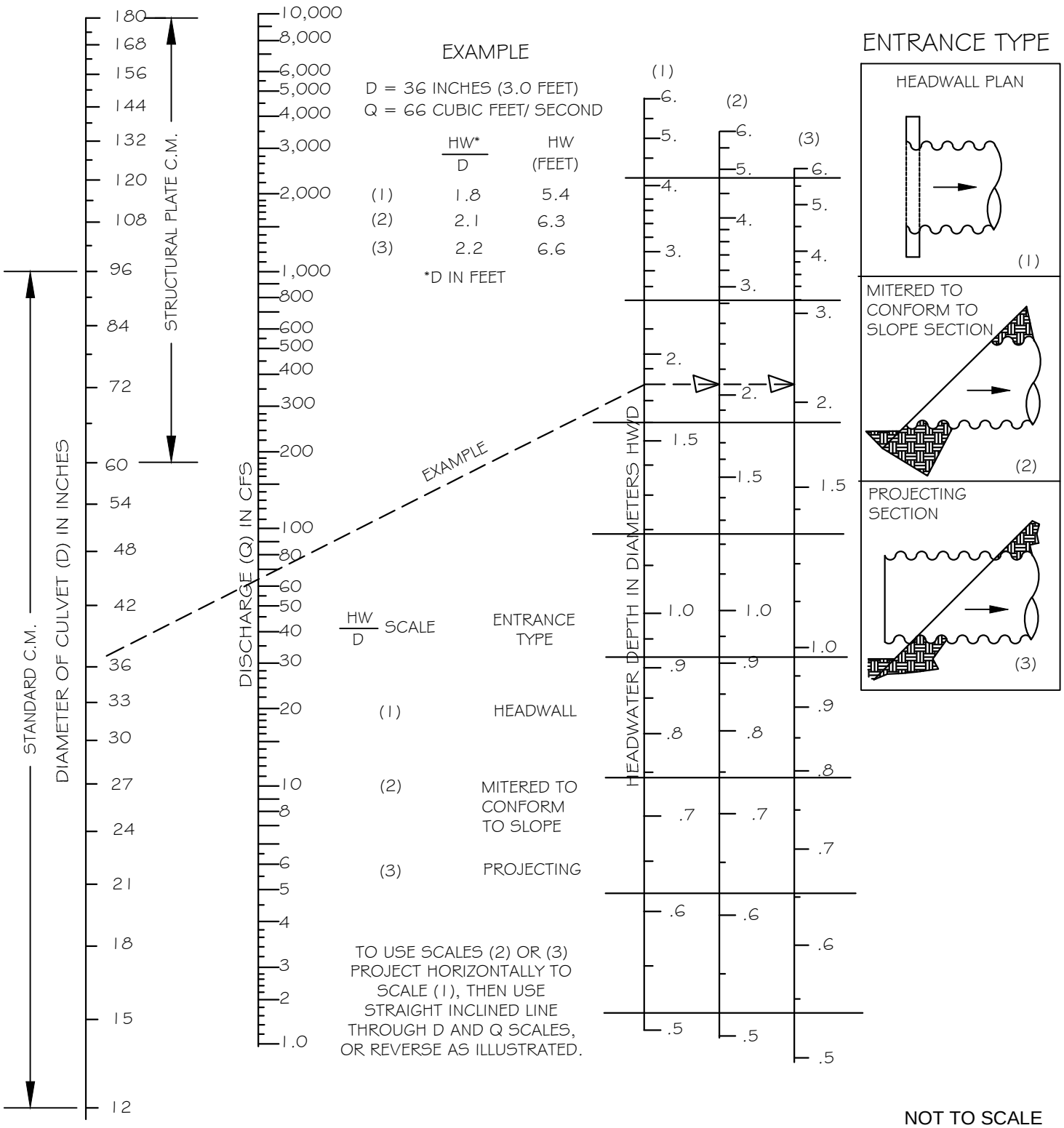

DEPARTMENT OF ECOLOGY
State of Washington

Figure V-10.3.3
Headwater Depth for Corrugated Pipe Culverts with Inlet Control

Revised February 2016

Please see *http://www.ecy.wa.gov/copyright.html* for copyright notice including permissions, limitation of liability, and disclaimer.

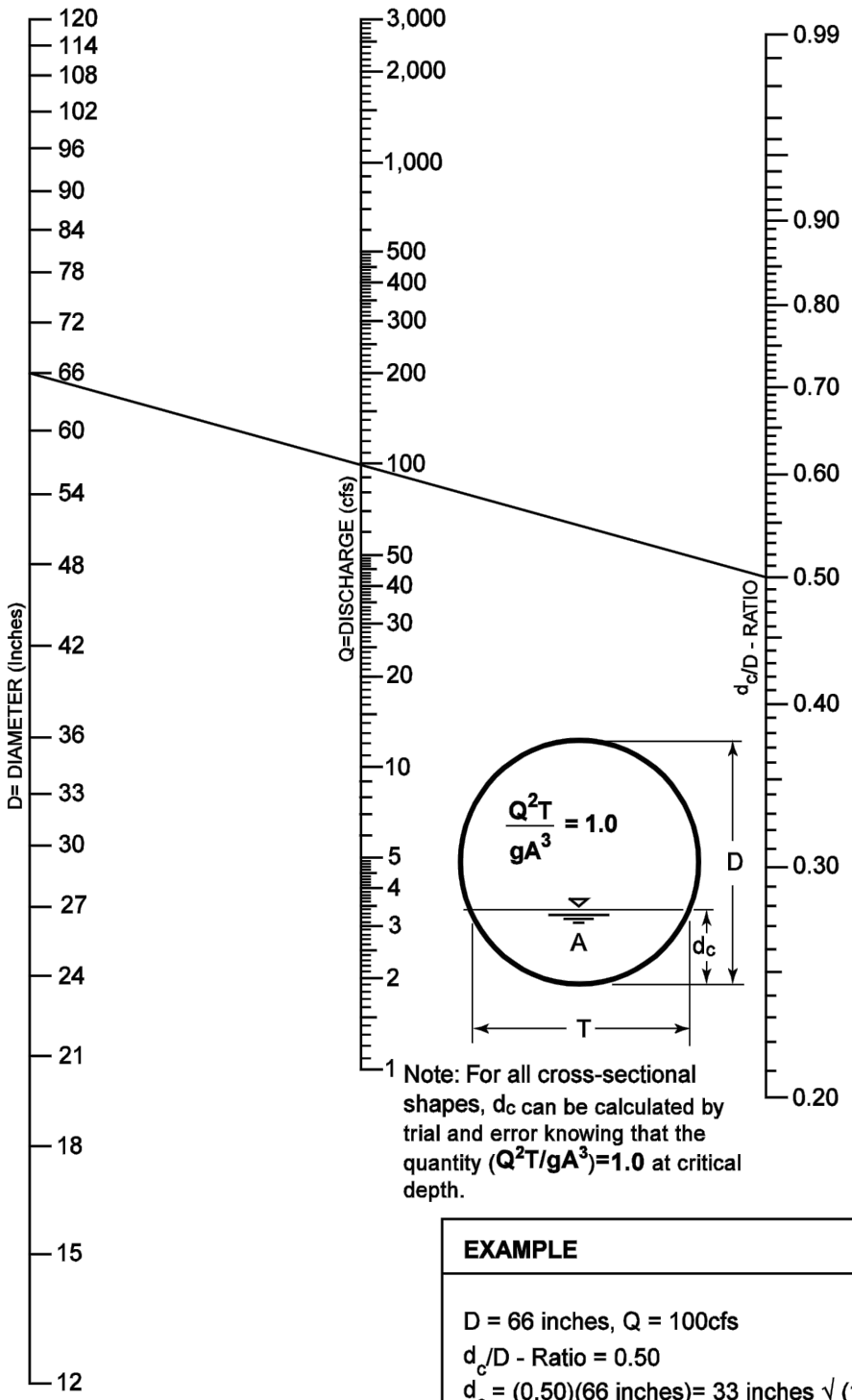

Note: For all cross-sectional shapes, d_c can be calculated by trial and error knowing that the quantity (Q^2T/gA^3)=1.0 at critical depth.

EXAMPLE

D = 66 inches, Q = 100cfs

d_c/D - Ratio = 0.50

d_c = (0.50)(66 inches)= 33 inches √ (12 inches/ft)

d_c= 2.75 feet

DEPARTMENT OF ECOLOGY
State of Washington

Figure V-10.3.4
Critical Depth of Flow for Circular Culverts

Revised March 2016

Please see *http://www.ecy.wa.gov/copyright.html* for copyright notice including permissions, limitation of liability, and disclaimer.

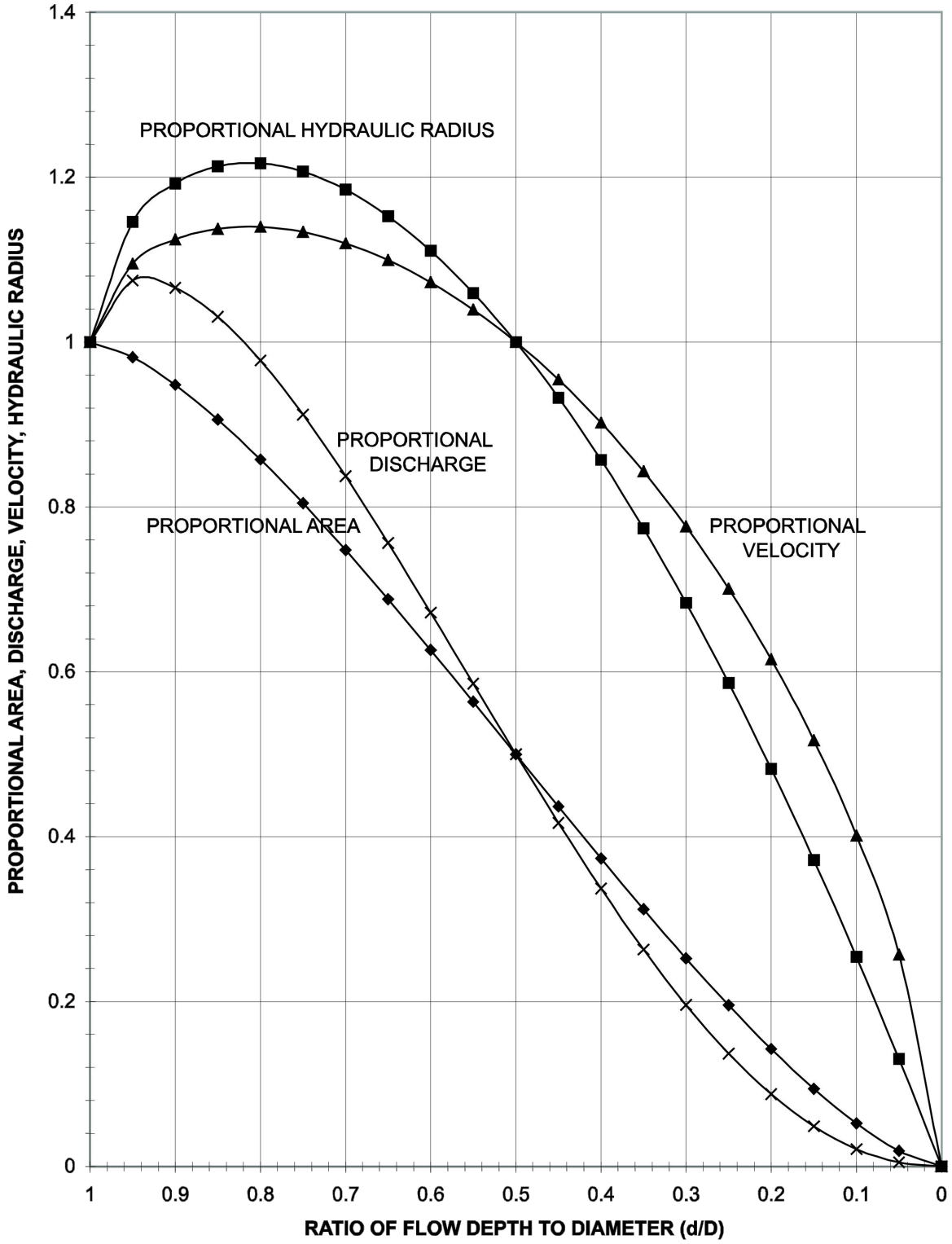

DEPARTMENT OF
ECOLOGY
State of Washington

Figure V-10.3.5
Circular Channel Ratios

Revised March 2016

Please see *http://www.ecy.wa.gov/copyright.html* for copyright notice including permissions, limitation of liability, and disclaimer.

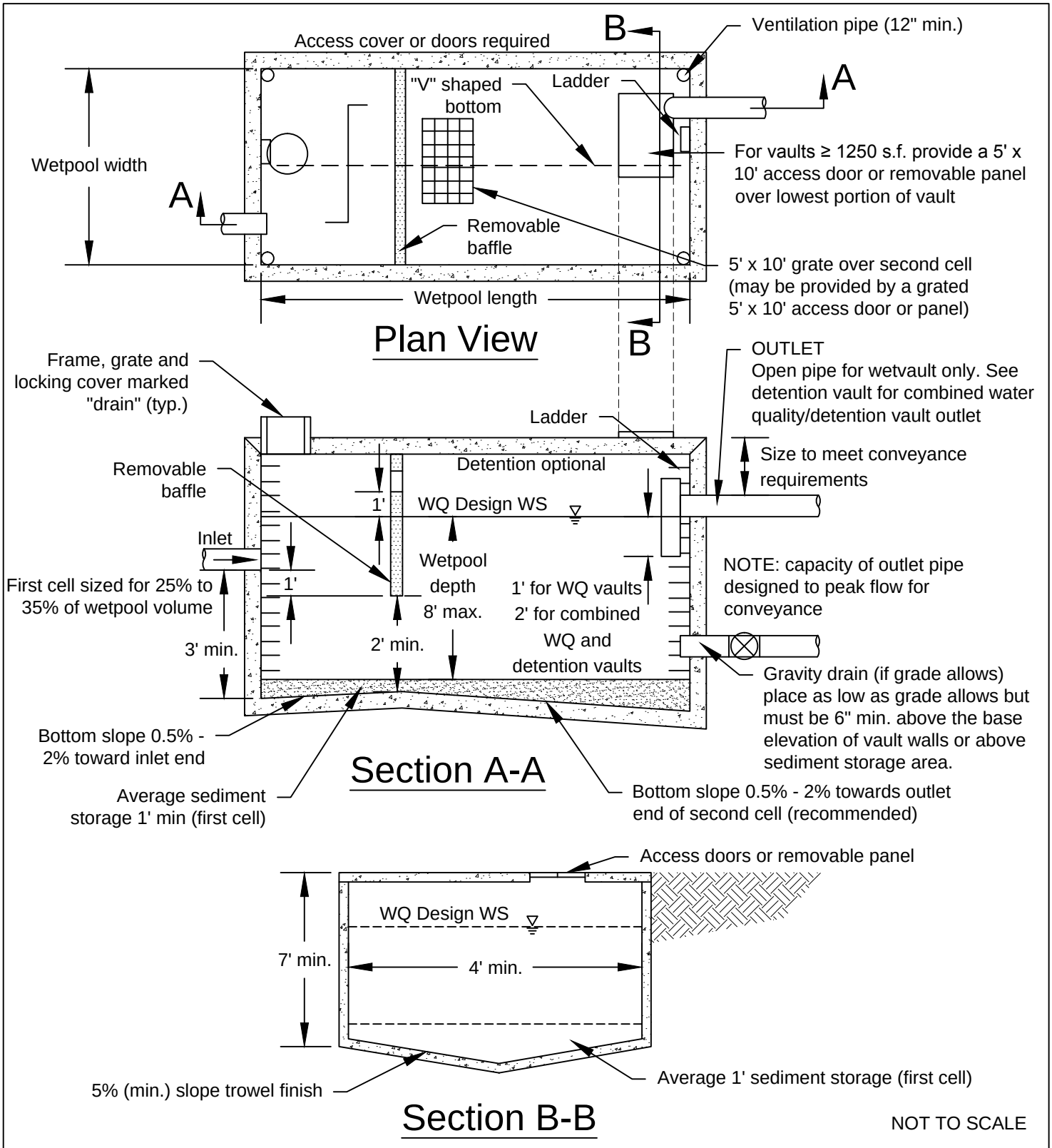

DEPARTMENT OF ECOLOGY
State of Washington

Figure V-10.3.6
Wetvault

Revised February 2016

Please see *http://www.ecy.wa.gov/copyright.html* for copyright notice including permissions, limitation of liability, and disclaimer.

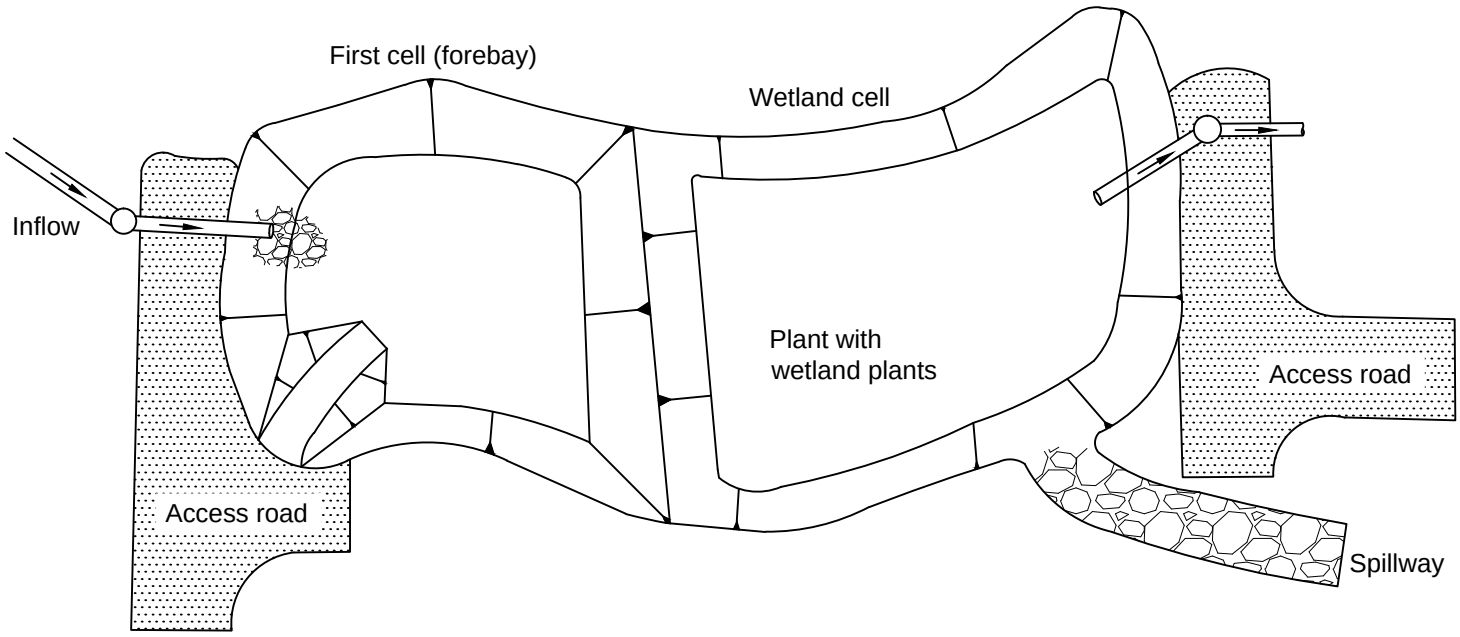

Plan View Option A

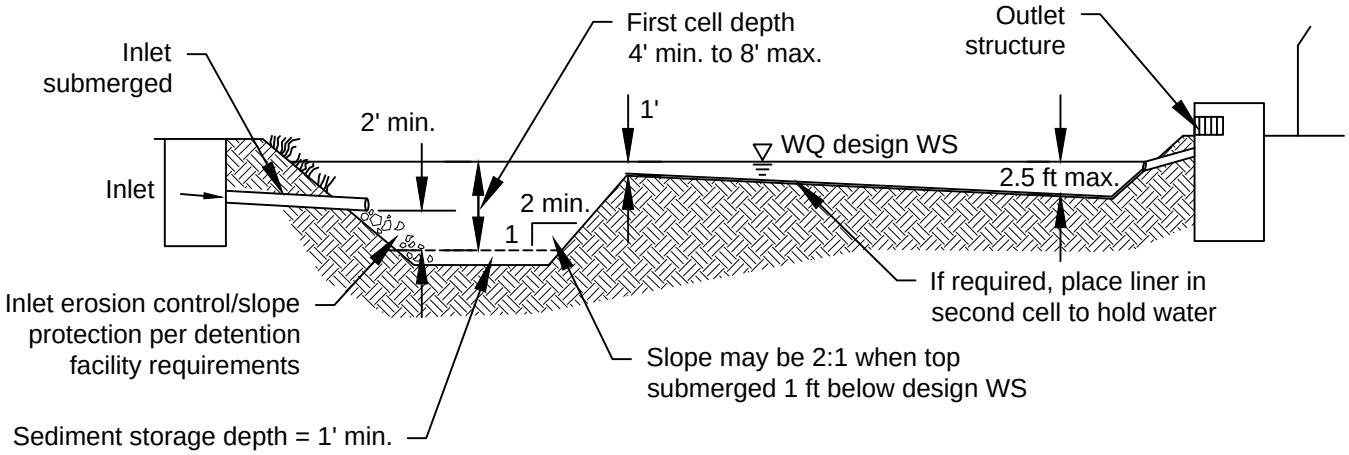

Section View Option A

Note: See detention facility requirements
for location and setback requirements

NOT TO SCALE

DEPARTMENT OF
ECOLOGY
State of Washington

Figure V-10.3.7
Stormwater Wetland - Option 1

Revised March 2016

Please see *http://www.ecy.wa.gov/copyright.html* for copyright notice including permissions, limitation of liability, and disclaimer.

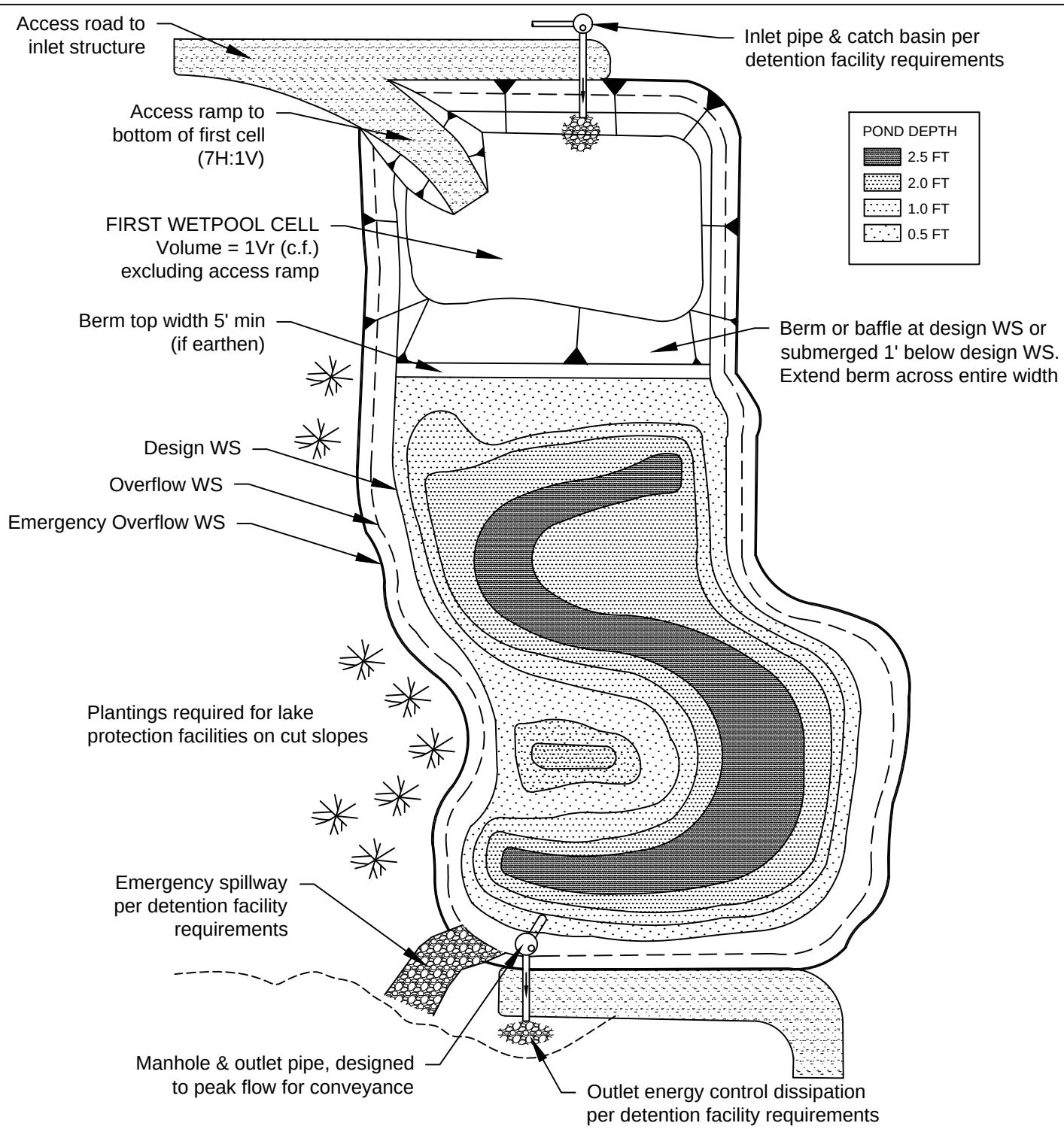

Plan View Option B

NOT TO SCALE

DEPARTMENT OF ECOLOGY
State of Washington

Figure V-10.3.8
Stormwater Wetland - Option 2

Revised March 2016

Please see *http://www.ecy.wa.gov/copyright.html* for copyright notice including permissions, limitation of liability, and disclaimer.

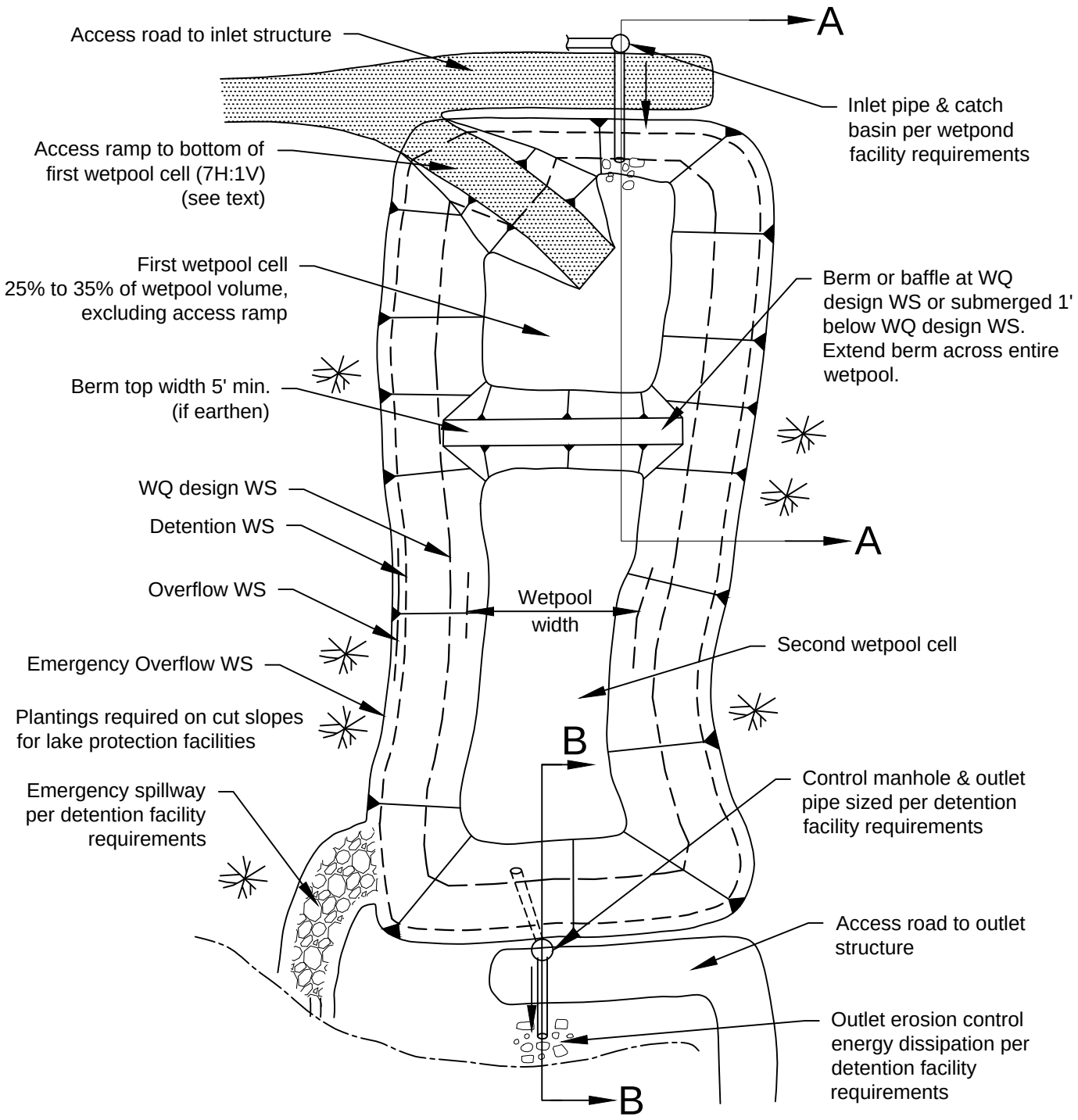

Plan View

NOT TO SCALE

DEPARTMENT OF ECOLOGY
State of Washington

Figure V-10.3.9
Combined Detention and Wetpond

Revised March 2016

Please see *http://www.ecy.wa.gov/copyright.html* for copyright notice including permissions, limitation of liability, and disclaimer.

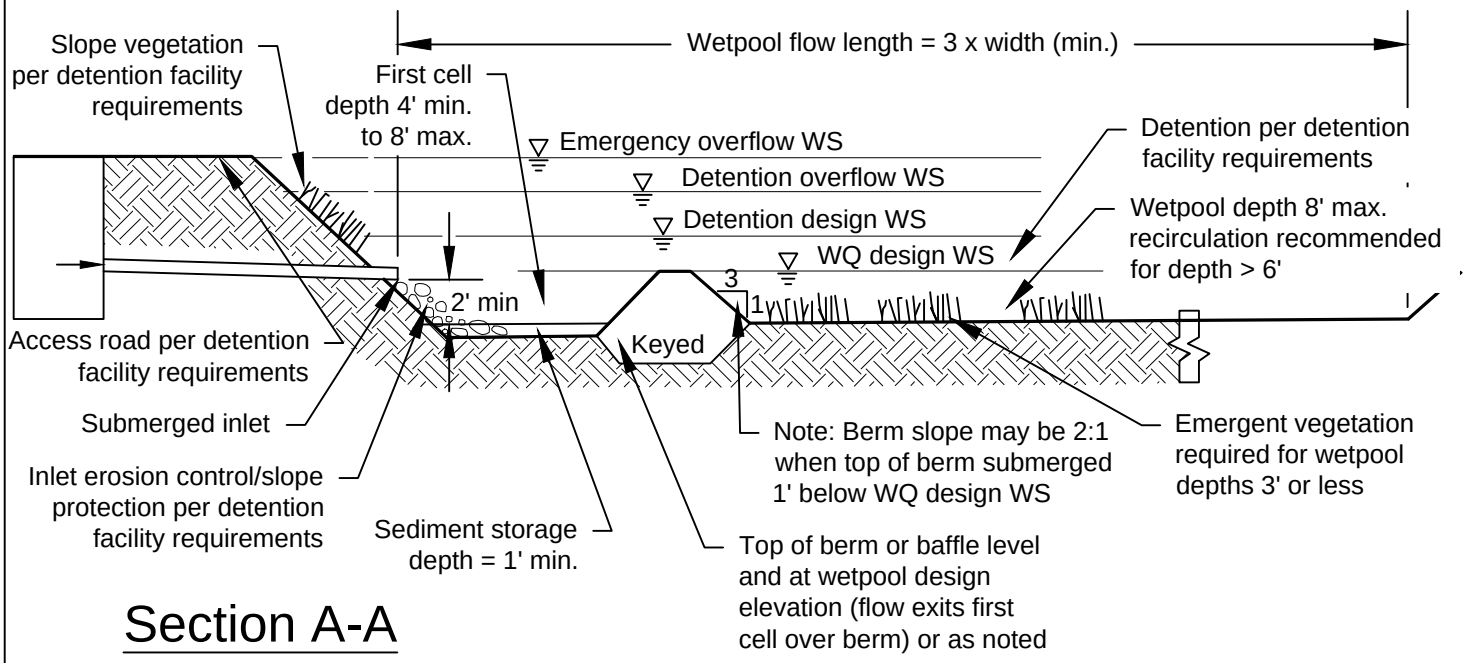

Section A-A

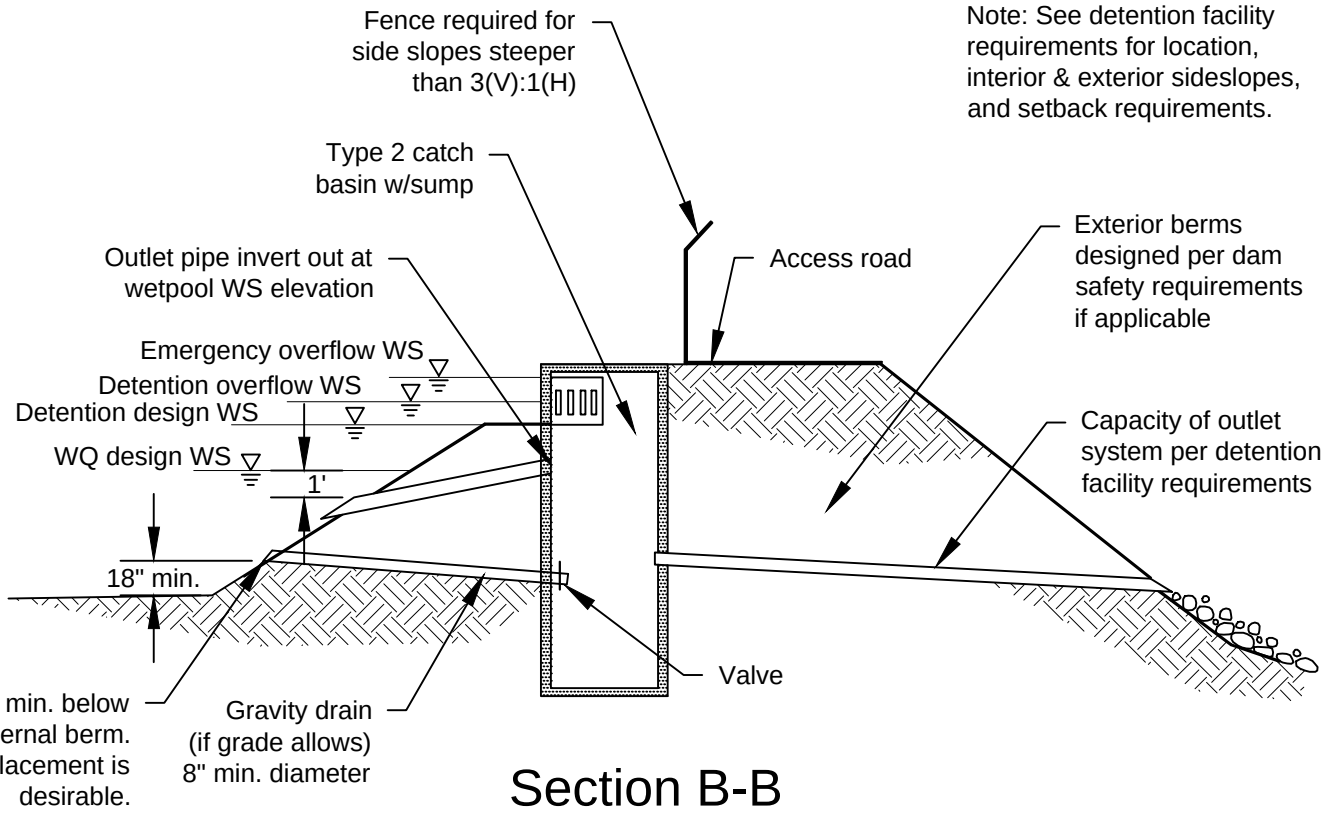

Section B-B

NOT TO SCALE

DEPARTMENT OF ECOLOGY
State of Washington

Figure V-10.3.10
Combined Detention and Wetpond (Continued)

Revised March 2016

Please see *http://www.ecy.wa.gov/copyright.html* for copyright notice including permissions, limitation of liability, and disclaimer.

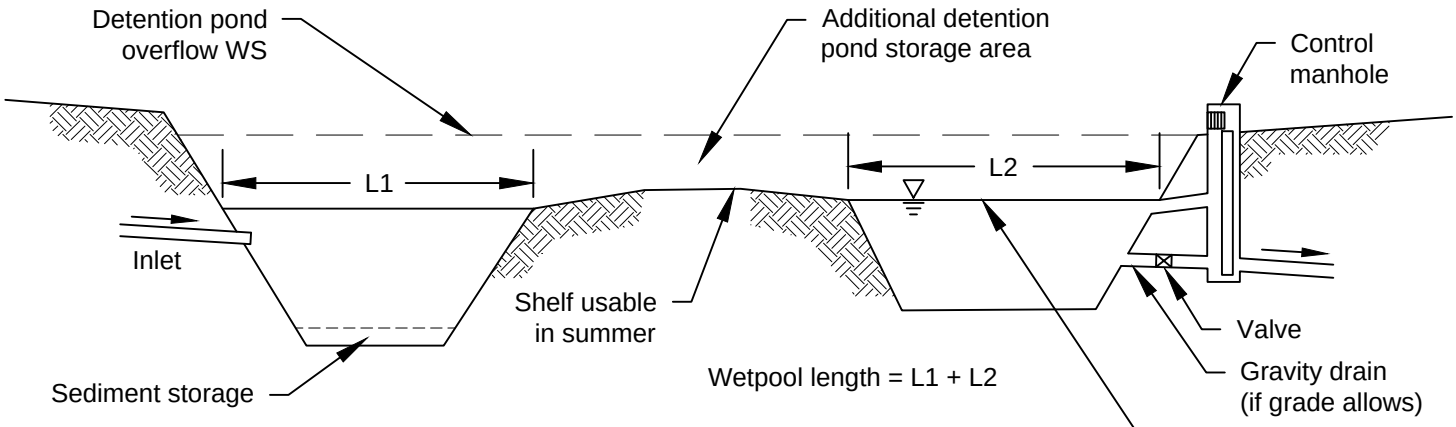

Section View

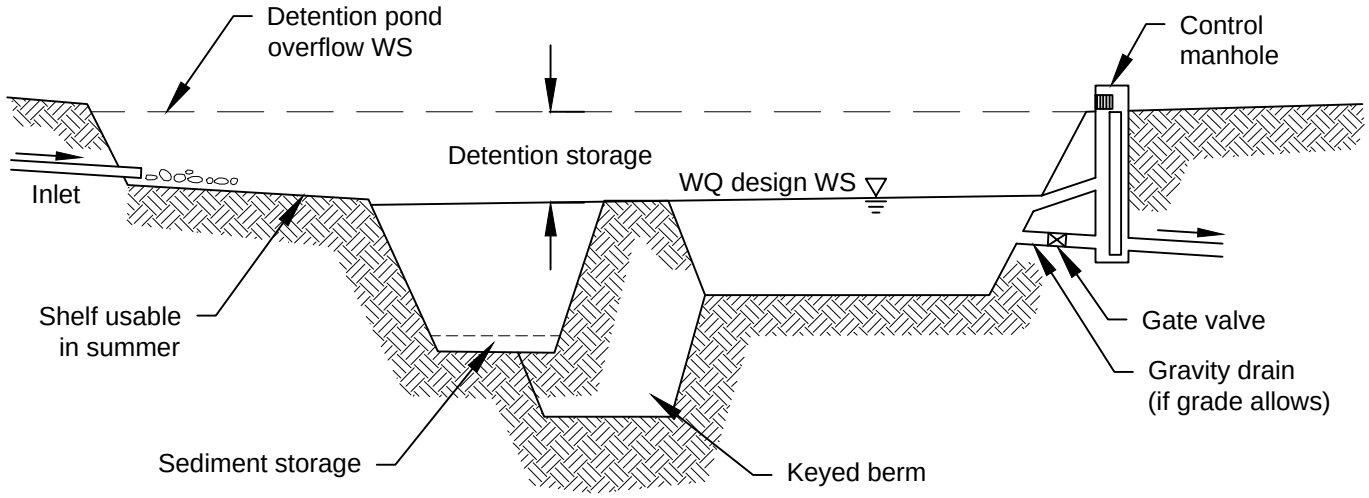

Section View

Note: These examples show how the combined detention/wetpool can be configured to allow for "shelves" for joint use opportunities in dry weather. Other options may also be acceptable.

NOT TO SCALE

DEPARTMENT OF
ECOLOGY
State of Washington

Figure V-10.3.11
Alternative Configurations of Detention and Wetpool Areas

Revised March 2016

Please see *http://www.ecy.wa.gov/copyright.html* for copyright notice including permissions, limitation of liability, and disclaimer.

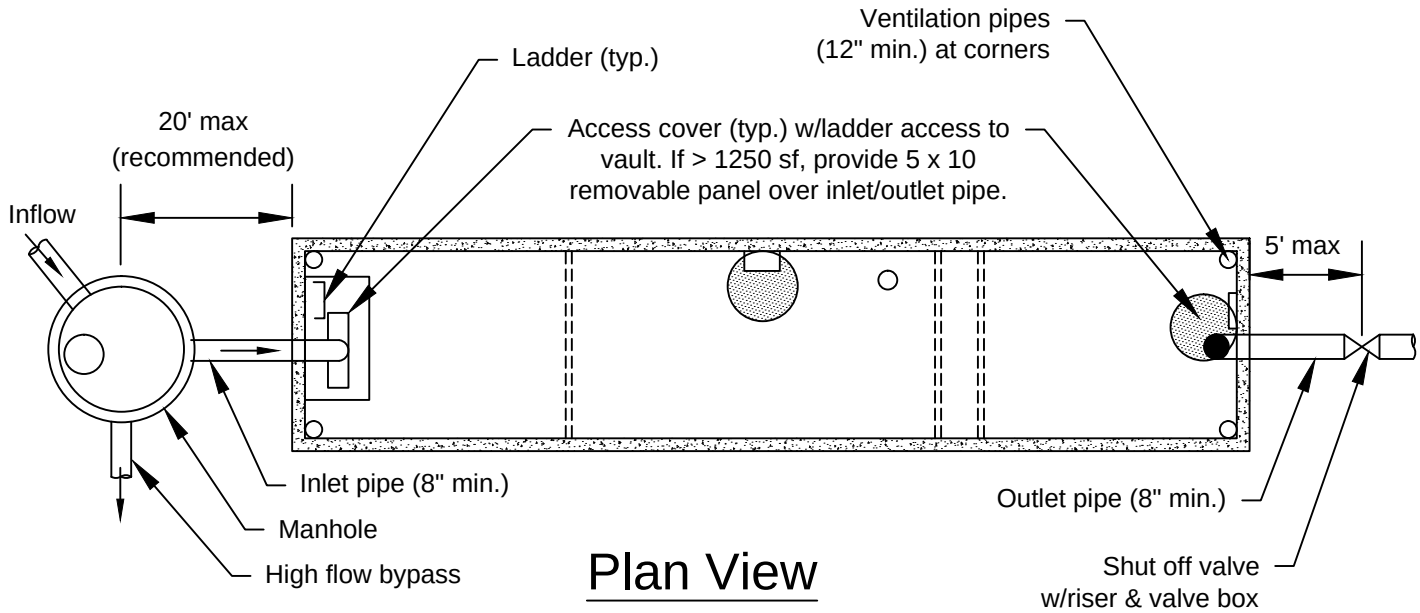

Plan View

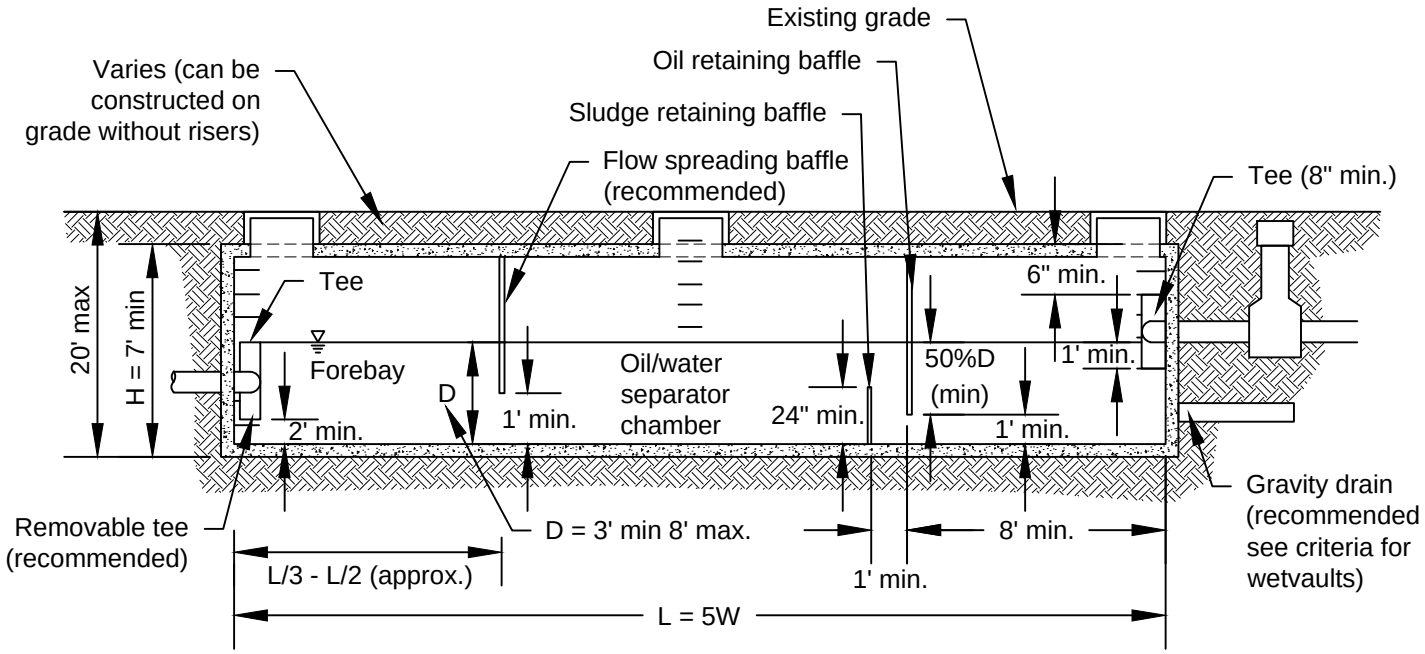

Section View

NOT TO SCALE

Source: King County (reproduced with permission)

DEPARTMENT OF
ECOLOGY
State of Washington

Figure V-11.2.1
API (Baffle Type) Separator

Revised March 2016

Please see *http://www.ecy.wa.gov/copyright.html* for copyright notice including permissions, limitation of liability, and disclaimer.

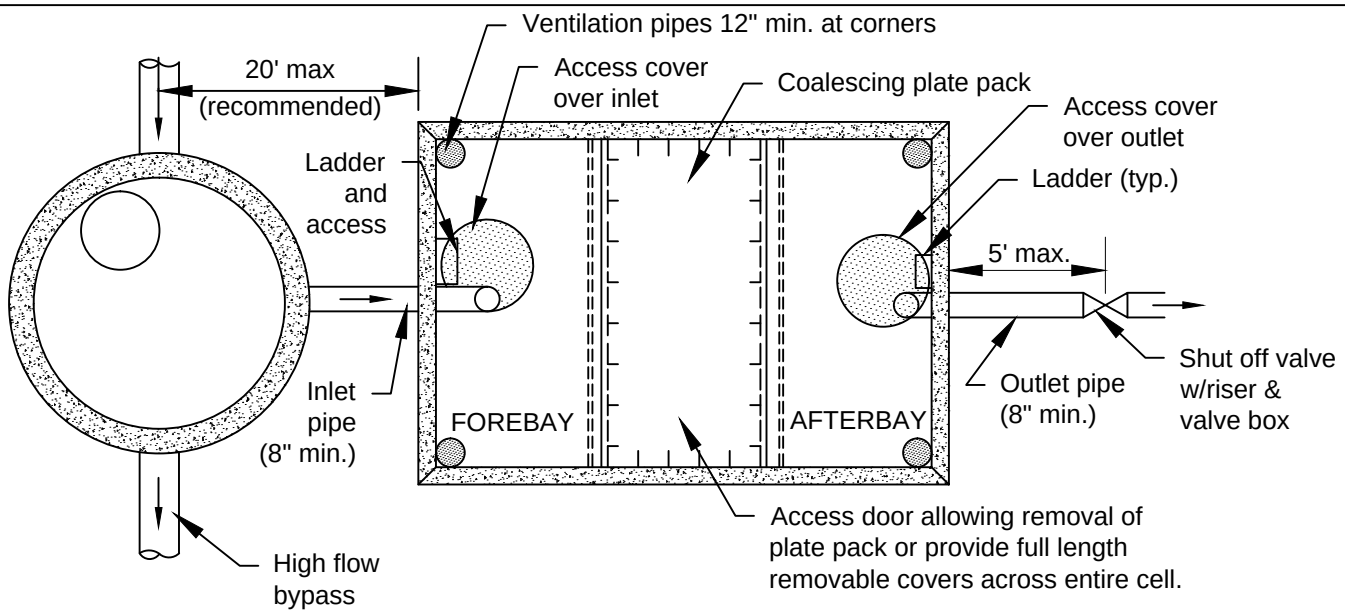

Plan View

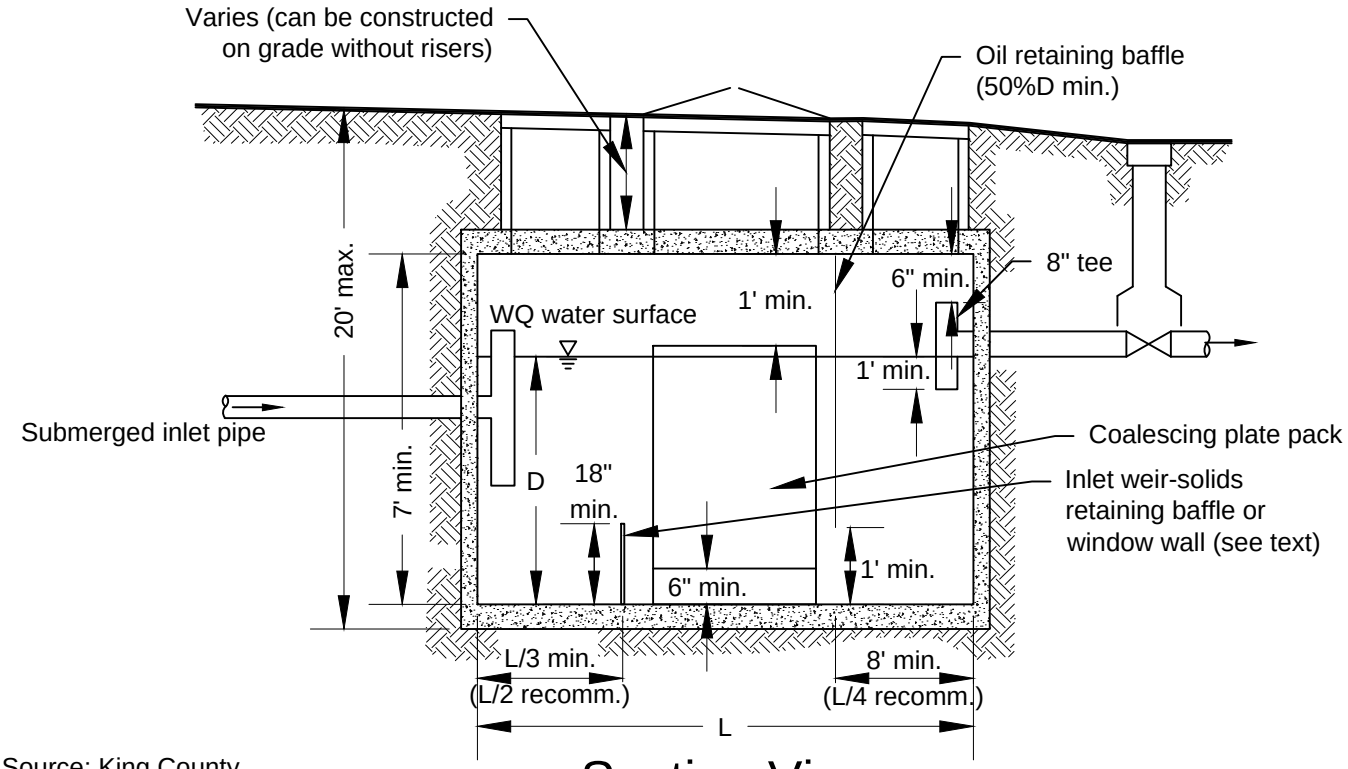

Section View

Source: King County
(reproduced with permission)

NOT TO SCALE

DEPARTMENT OF
ECOLOGY
State of Washington

Figure V-11.2.2
Coalescing Plate Separator

Revised March 2016

Please see *http://www.ecy.wa.gov/copyright.html* for copyright notice including permissions, limitation of liability, and disclaimer.

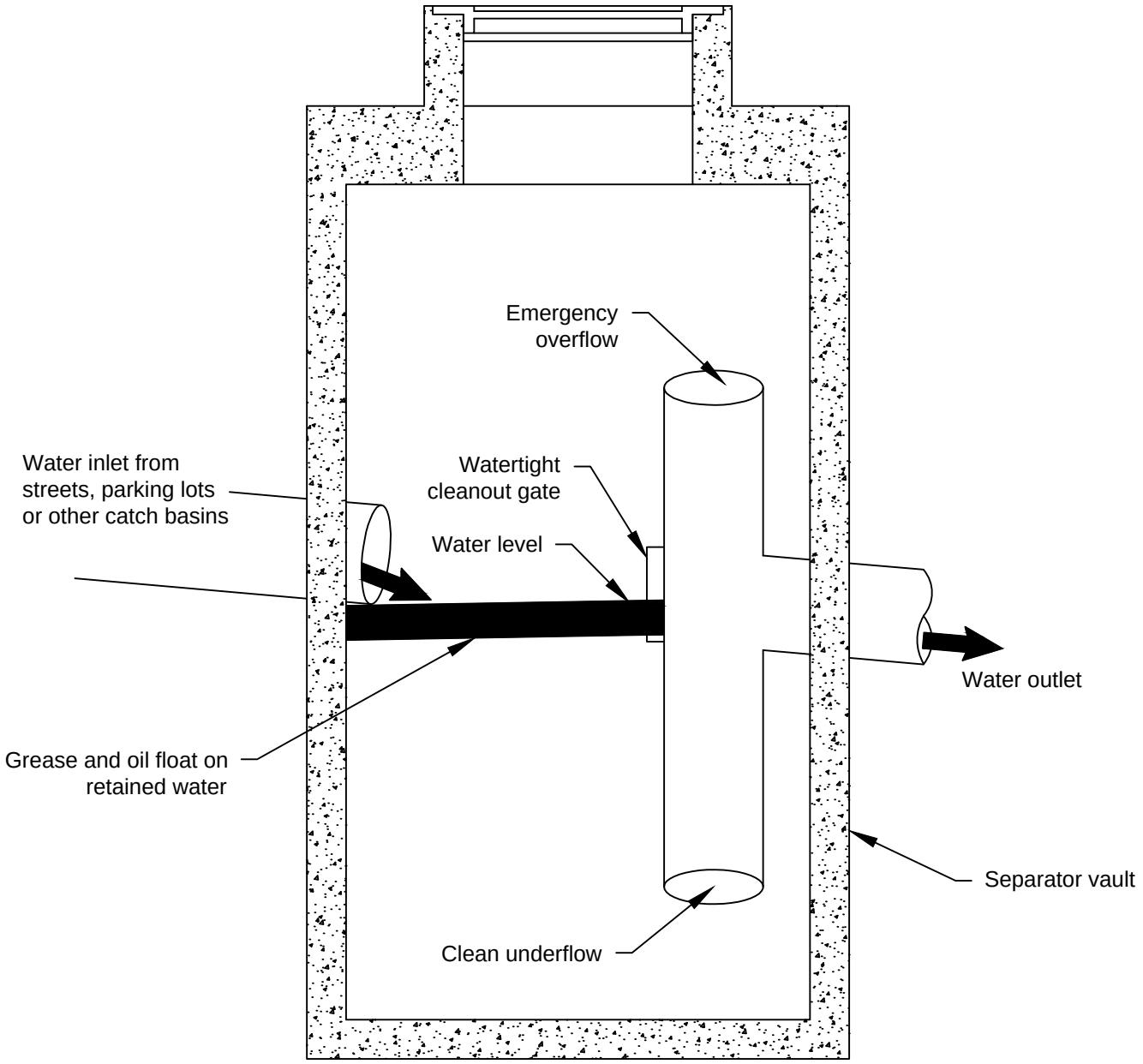

Source: 1992 Ecology Manual

NOT TO SCALE

DEPARTMENT OF ECOLOGY
State of Washington

Figure V-11.2.3
Spill Control Separator (not for oil treatment)

Revised March 2016

Please see *http://www.ecy.wa.gov/copyright.html* for copyright notice including permissions, limitation of liability, and disclaimer.

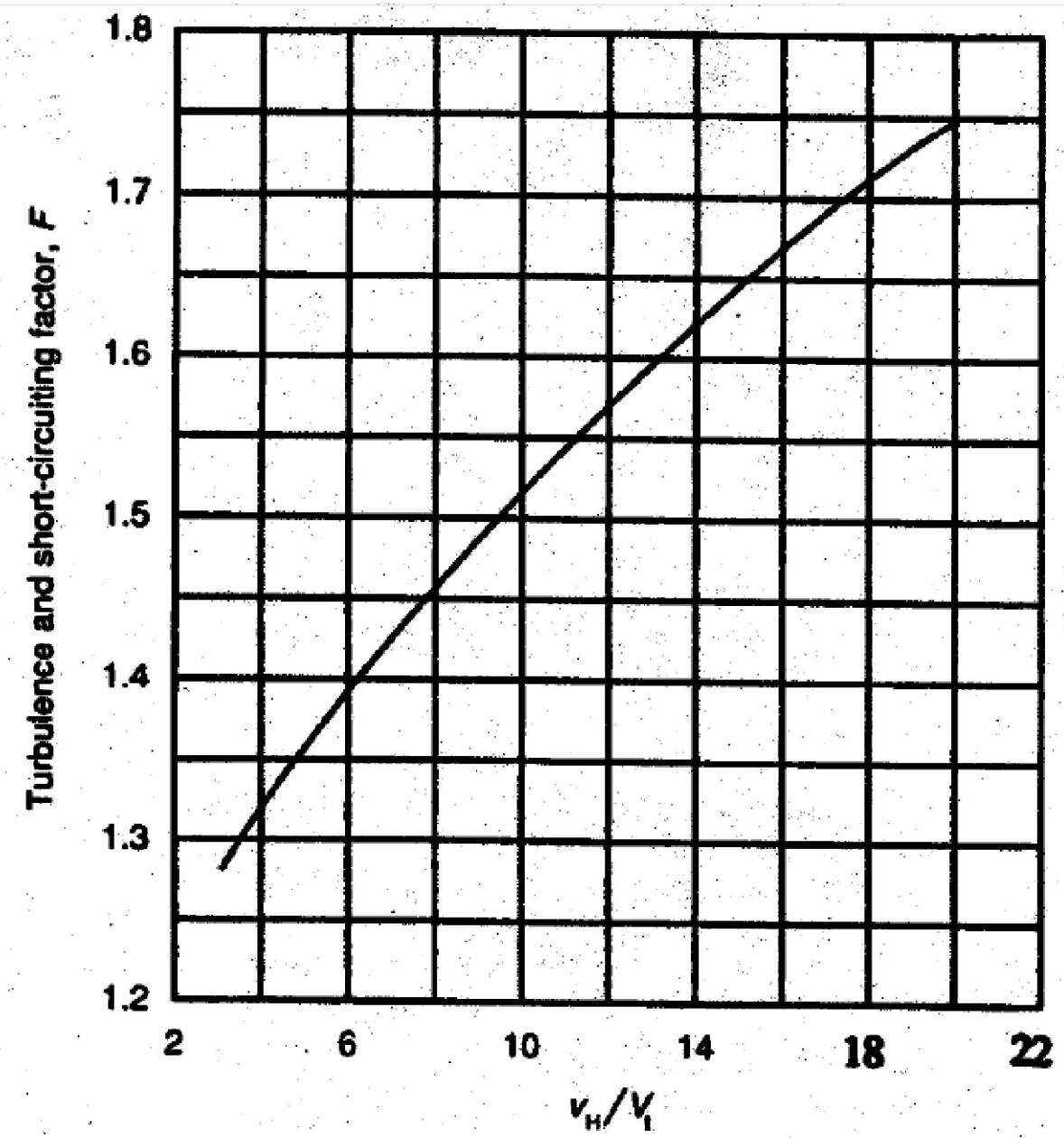

v_H/V_t	Turbulence Factor (F_t)	$F = 1.2(F_t)$
20	1.45	1.74
15	1.37	1.64
10	1.27	1.52
6	1.14	1.37
3	1.07	1.28

DEPARTMENT OF
ECOLOGY
State of Washington

Figure V-D.1
Recommended Values for *F* for Various Values of v_H/V_t

Revised March 2016

Please see *http://www.ecy.wa.gov/copyright.html* for copyright notice including permissions, limitation of liability, and disclaimer.