Quality Assurance Project Plan for Stormwater Monitoring

Conducted Under Section S8.D of the
Phase I Municipal Stormwater Permit

Port of Seattle
Marine Division

Prepared By:
Taylor Associates, Inc.
and Otak, Inc.

Final

February 20, 2009

Port of Seattle

Quality Assurance Project Plan For Stormwater Monitoring

Conducted Under Section S8.D of the Phase I Municipal Stormwater Permit

by

Port of Seattle

Prepared by:

Taylor Associates, Inc.

and

Otak, Inc.

Final

February 2009

1.0 TITLE AND APPROVAL PAGES

Quality Assurance Project Plan For Stormwater Monitoring

Conducted Under Section S8.D of the Phase I Municipal Stormwater Permit

Port of Seattle

Permittee Number WAR 04-4701

Port of Seattle
Pier 69
2711 Alaskan Way
Seattle, WA 98121

Prepared by:

Taylor Associates, Inc.

And

Otak, Inc.

Final

February 2009

Internal Review and Approval

Name/Title/Organization	Signature	Date
Stephanie Jones Stebbins Senior Manager Seaport Environmental Programs Port of Seattle		3/1/09
Kathy Bahnick Manager Environmental Remediation Seaport Environmental Programs Port of Seattle		2/27/09
Marilyn Guthrie Stormwater Program Manager Port of Seattle		2/25/2009

External Review and Approval

Name/Title/Organization	Signature	Date

Certification

I certify under penalty of law, that this document and all attachments were prepared under my direction or supervision in accordance with a system designed to assure that qualified personnel properly gathered and evaluated the information submitted. Based on my inquiry of the person or persons who manage the system or those persons directly responsible for gathering information, the information submitted is, to the best of my knowledge and belief, true, accurate, and complete. I am aware that there are significant penalties for submitting false information, including the possibility of fine and imprisonment for willful violations.

Name/Title/Organization	Signature	Date
Stephanie Jones Stebbins Senior Manager Seaport Environmental Programs Port of Seattle		3/1/09
Kathy Bahnick Manager Environmental Remediation Seaport Environmental Programs Port of Seattle		2/27/09
Marilyn Guthrie Stormwater Program Manager Port of Seattle		2/25/2009

2.0 TABLE OF CONTENTS

1.0 TITLE AND APPROVAL PAGES i

2.0 TABLE OF CONTENTS iv

3.0 BACKGROUND 1

3.1 Purpose and Overview of this QAPP 1

3.2 Phase I Municipal Stormwater Permit 1

3.2.1 Permit Overview and Monitoring Requirements 1
3.2.2 Stormwater Monitoring 2
3.2.3 Controlling Stormwater Discharges 3

3.3 Properties Under the Control of the NPDES Phase I Permit 4

3.3.1 Selection of Properties for Stormwater Monitoring 9
3.3.2 Selection of Most Representative Land Use 10

4.0 PROJECT DESCRIPTION 11

4.1 Project Goals 11

4.2 Project Objectives 11

4.3 Information Requirements 11

4.4 Data Collection 12

4.4.1 Stormwater Sampling 12
4.4.2 Toxicity Sampling 12
4.4.3 Sediment Sampling 12

4.5 Target Population 13

4.6 Study Boundary 13

4.7 Practical Constraints 13

4.8 Decision Making 15

5.0 ORGANIZATION AND SCHEDULE 16

5.1 Roles and Responsibilities 16

5.2 Schedule 17

5.3 Special Training Needs/Certification 18

5.4 Revisions 19

6.0 QUALITY OBJECTIVES 20

6.1 Data Quality Objectives 20

6.2 Measurement Quality Indicators ... 20
6.2.1 Precision ... 22
6.2.2 Accuracy ... 23
6.2.3 Sensitivity ... 24
6.2.4 Representativeness ... 25
6.2.5 Completeness ... 25
6.2.6 Comparability ... 26

7.0 SAMPLING PROCESS DESIGN (Experimental Design) ... 27

7.1 Monitoring Site Section Process ... 27
7.1.1 Selecting a Monitoring Site at Shilshole Bay Marina ... 29

7.2 Monitoring Site Description ... 36
7.2.1 Selected Drainage Basin ... 36
7.2.2 Monitoring Site ... 41
7.2.3 Basin Size to Time of Concentration ... 43
7.2.4 Estimated Peak Flows and Volumes ... 43

7.3 Qualifying Storm Event ... 44

7.4 Precipitation Monitoring ... 44

7.5 Flow Monitoring ... 45

7.6 Stormwater Sample Collection ... 45
7.6.1 Grab Sampling ... 46
7.6.2 Composite Sampling ... 47
7.6.3 First Flush Toxicity Sampling ... 53
7.6.4 Baseflow Sampling ... 55

7.7 Sediment Sampling ... 55

7.8 Monitoring Equipment Installation and Setup ... 57
7.8.1 Precipitation Monitoring ... 57
7.8.2 Stormwater Monitoring ... 57
7.8.3 Monitoring Equipment Preparation and Testing ... 59
7.8.4 Sediment Sampling Apparatus ... 60

8.0 SAMPLING PROCEDURES ... 65

8.1 Precipitation and Flow Monitoring ... 65

8.2 Stormwater Sample Collection ... 65
8.2.1 Procedures for Storm Targeting ... 65
8.2.2 Pre-storm Site Setup ... 66
8.2.3 Storm Event Grab Sample Collection ... 67
8.2.4 Mid-Event Site Visits ... 67
8.2.5 Composite Sample Retrieval ... 68
8.2.6 Field Sample Validation ... 69
8.2.7 Periodic Preventative Maintenance ... 69

8.3 Baseflow Sample Collection ... 70

8.4 Sediment Sample Collection ... 70

8.5 Non-Direct Measurements ... 71

9.0 MEASUREMENT PROCEDURES ... 72

9.1 Laboratory Selection ... 72
9.1.1 Chemical Analysis Laboratory ... 72
9.1.2 Toxicological Laboratory ... 72

9.2 Post Storm Event Sample Processing ... 73
9.2.1 Routine Composite and Toxicity Samples ... 73
9.2.2 Annual Sediment Sample ... 75
9.2.3 Sample Amounts, Containers, Preservation, and Holding Times ... 75
9.2.4 Sample Labels and Chain of Custody ... 80

9.3 Chemical Analysis and Toxicity Testing Procedures ... 81
9.3.1 Chemical Analysis Water and Sediment ... 81
9.3.2 Toxicity Testing Procedures ... 87

10.0 QUALITY CONTROL ... 92

10.1 Field Quality Control ... 92
10.1.1 Field Quality Control Procedures ... 92
10.1.2 Field Control Samples ... 93

10.2 Laboratory Quality Control ... 98
10.2.1 Laboratory Control Samples ... 98

10.3 Toxicity Testing Quality Assurance ... 104

11.0 DATA MANAGEMENT PROCEDURES ... 105

11.1 Field Activity Data ... 105

11.2 Field Monitoring Data ... 105

11.3 Laboratory Data ... 105

12.0 ASSESSMENT/OVERSIGHT ... 106

12.1 Assessments and Response Actions ... 106
12.1.1 Laboratory Performance and Systems Audits ... 106
12.1.2 Field Team Performance and System Audits ... 107

13.0 REPORTING ... 108

13.1 Storm Files ... 108

13.2 Status Reports to Management ... 109

13.3 Annual Stormwater Monitoring Report ... 109

13.3.1 Stormwater Monitoring Summary 110
13.3.2 Data Report and QA/QC Report 110
13.3.3 Pollutant Loading Calculations 111

14.0 DATA REVIEW VERIFICATION AND VALIDATION 113

14.1 Data Review, Verification, and Validation Summary 113

14.2 Verification and Validation Methods 114
14.2.1 Data Verification Inputs 114
14.2.2 Data Verification Implementation Methods 115
14.2.3 Data Verification Outputs 116

15.0 DATA QUALITY (USABILITY) ASSESSMENT 117

16.0 REFERENCES 118

APPENDIX A: DATES, TIMES AND DURATION OF TIDES ABOVE STRUCTURE 5482 OUTLET INVERT ELEVATION: MARCH 2009 – MARCH 2010
APPENDIX B: TIME OF CONCENTRATION OUTPUT TABLES AND ESTIMATED PEAK FLOWS AND VOLUMES FOR STORMWATER DRAINAGE BASIN 6057
APPENDIX C: FIELD DATA SHEETS AND COC FORMS
APPENDIX D: ANALYTICAL STANDARD OPERATING PROCEDURES
APPENDIX E: TOXICITY TESTING STANDARD OPERATING PROCEDURES

LIST OF TABLES

Table 1. Port of Seattle properties categorized by NPDES permit type 9
Table 2. Dominant land uses in Port of Seattle NPDES Phase I Municipal Permit area.. 10
Table 3. Project participant roles and responsibilities 16
Table 4. Anticipated project schedule..... 17
Table 5. Measurement quality objectives for chemical analysis of stormwater 21
Table 6. Measurement quality objectives for physical and chemical analysis of sediments 22
Table 7. Reason for selection or elimination of sites for performing stormwater monitoring..... 28
Table 8. Selected drainage basin attributes..... 36
Table 9. Qualifying storm event criteria. 44
Table 10. Approximate yearly distribution of stormwater outfall samples 46
Table 11. Stormwater grab sample analytes and required volumes..... 46
Table 12. Analytical parameters and required sample volumes for routine stormwater composite samples 49
Table 13. Chemical parameters and required volumes for the seasonal first-flush toxicity sample 54
Table 14. Required sample volume for toxicity testing. 54
Table 15. Analytical parameters and required sample amounts for annual sediments..... 57
Table 16. Typical sample amounts, containers, preservatives, recommended handling, and holding times for routine stormwater composite samples..... 76
Table 17. Typical sample amounts, containers, preservatives, recommended handling, and holding times for first-flush stormwater composite chemical analysis..... 77
Table 18. Recommended sample amount, container type, preservative, handling, and holding time for first-flush stormwater composite toxicity testing 78
Table 19. Typical sample amounts, containers, preservatives, recommended handling, and holding times for sediments 78
Table 20. Target constituents, analytical methods, laboratory method detection and reporting limits, and reporting limit targets for stormwater 82
Table 21. Target constituents, analytical methods, laboratory method detection and reporting limits, and reporting limit targets for sediments 84
Table 22. Targeted freshwater chronic toxicity test, test method, laboratory reporting limit, and reporting limit target for seasonal first-flush stormwater toxicity testing 88
Table 23. Summary of project field quality control requirements..... 97
Table 24. Summary of project laboratory quality control requirements..... 103

Table 25. Data collection period included in each annual report 109
Table 26. Example data verification inputs 114
Table 27. Example DQA table..... 117

LIST OF FIGURES

Figure 1. Seaport Division vicinity maps. 5
Figure 2. Shilshole Bay Marina vicinity map. 31
Figure 3. Shilshole Bay Marina storm drainage system. 33
Figure 4. Outfalls and drainage basins considered for stormwater monitoring. 37
Figure 5. Selected stormwater drainage basin. 39
Figure 6. Monitoring site diagram. 42
Figure 7. Diagram of autosampler 12-bottle configuration for routine flow-weighted composite sampling. 52
Figure 8. Diagram of monitoring site equipment layout..... 58
Figure 9. Construction details of typical stormwater sediment trap. 61
Figure 10. End of pipe sediment trap conceptual design. 63

DISTRIBUTION LIST

Name/Affiliation	Title	Telephone No.	No. of copies(1)
Marilyn Guthrie Port of Seattle	Stormwater Program Manager	(206) 728-3378	1 hardcopy and electronic copy
Ed Abassi Washington State Department of Ecology NW Regional Office	Stormwater Engineering Specialist	(425) 649-7227	3 hardcopies and electronic copy

(1) Specify if electronic copy or hardcopy.

This Page Intentionally Left Blank.

3.0 BACKGROUND

This section presents the purpose and overview of the Quality Assurance Project Plan (QAPP) developed for this project; an overview of the Phase I Municipal Stormwater Permit; and Port of Seattle properties under the control of the Phase I Permit where stormwater monitoring could occur.

3.1 PURPOSE AND OVERVIEW OF THIS QAPP

The purpose of this Quality Assurance Project Plan is to present the quality assurance and quality control (QC/QC) procedures for field activities and laboratory analyses associated with Stormwater Monitoring to be conducted by the Port of Seattle, as required by Section S8.D of the National Pollutant Discharge and Elimination System and State Waste Discharge General Permit for Discharges from Large and Medium Municipal Separate Storm Sewer Systems (Phase I Permit).

To address this monitoring requirement, Stormwater Monitoring will be conducted at a single Port of Seattle outfall location (per Permit §S8.D.1.d) and will include the collection of event based and grab samples for chemical analysis, seasonal "first-flush" toxicity testing, and the collection of an annual sediment sample for chemical analysis.

3.2 PHASE I MUNICIPAL STORMWATER PERMIT

This section provides an overview of the Phase I Permit, stormwater monitoring requirements, and discusses issues related to controlling stormwater discharges and monitoring challenges associated with the Port of Seattle.

3.2.1 Permit Overview and Monitoring Requirements

The Washington State Department of Ecology (Ecology) issued the final National Pollutant Discharge and Elimination System (NPDES) and State Waste Discharge General Permit for Discharges from Large and Medium Municipal Separate Storm Sewer Systems (Phase I Permit) on January 17, 2007. The Phase I Permit applies to all entities in Washington State required to have permit coverage under current (Phase I) U.S. Environmental Protection Agency (EPA) stormwater regulations. This includes cities and unincorporated portions of counties whose populations exceed 100,000. The Washington State Phase I permittees include:

- King County
- Pierce County
- Snohomish County
- Clark County
- City of Seattle
- City of Tacoma

In addition to the permittees listed above, the following two entities were required to seek coverage under the Phase I Permit as Secondary Permittees:

- Port of Seattle (excluding Seattle-Tacoma International Airport)
- Port of Tacoma

In accordance with the Phase I Permit, each permittee listed above is required to develop and implement a comprehensive long-term monitoring program consistent with Special Condition S8 of the permit. In general, the required monitoring programs shall include the following three components:

- Stormwater Monitoring (§S8.D),
- Targeted Stormwater Management Program Effectiveness Monitoring (§S8.E), and
- Stormwater Treatment and Hydrologic Management Best Management Practices Evaluation Monitoring (§S8.F).

Ecology's objective in requiring permittee's to develop and implement a comprehensive long-term monitoring program is to provide a basis for the future reduction of stormwater pollutants. The information obtained from monitoring establishes a baseline for evaluation of the effectiveness of stormwater management strategies. It may also assist in the identification of seasonal trends that may influence the interpretation of monitoring results.

3.2.2 Stormwater Monitoring

In accordance with Section S8.D.1.d of the Permit, the Port of Seattle is required to monitor one stormwater outfall or conveyance. The land use associated with this site is to be representative of 80% of the land area served by the outfall (per Permit §S8.D.1.a). The primary objective of this stormwater monitoring program, as described in Section S8.D of the Permit, is to establish a database at one representative site, from which long-term trends can be observed. Data from this long-term monitoring program may be used to characterize stormwater runoff and provide a basis for evaluating the effectiveness of future stormwater control measures.

Stormwater at the selected site will be monitored in the following ways, consistent with the requirements specified in Section S8.D of the Phase I Permit:

- Continuous flow monitoring,
- Flow weighted-composite samples for chemical analyses,
- Grab samples for limited chemical analyses,
- Samples for toxicity testing of seasonal first-flush, and
- Sediment sampling for chemical analyses.

The type, number, and methodology used to select storm events to be monitored and the types of parameters to be analyzed are consistent with Section S8.D of the Permit, and are discussed in detail in the following sections of this QAPP.

3.2.3 Controlling Stormwater Discharges

Variable Nature of Stormwater Presents Monitoring Challenges

Municipal stormwater runoff has a number of unique attributes that make the identification of problems, as well as their associated solutions, difficult to determine.

- First, stormwater contains a wide variety of pollutants, and their concentrations can vary widely depending on storm events, land use, and a number of other local and regional parameters.
- In addition, the quality of stormwater runoff can often be difficult to manage due to the seasonal, sporadic nature of surface water discharges, and the character and unpredictability of storm events.
- Further adding to the difficulty of both sampling and controlling stormwater discharges is the fact that most municipal agencies have a large number of stormwater outfalls, with a wide diversity of locations and types of outfalls.

Additional Monitoring Challenges Associated with the Port of Seattle

Controlling stormwater discharges within the Port of Seattle presents even additional challenges unique to a Port facility located within a dense urban setting, along a busy commercial maritime waterfront.

- One of the most significant challenges is that the Port of Seattle is composed of a series of narrow pieces of land along the shoreline of Elliot, Salmon, and Shilshole Bays, as well as both sides of the Duwamish River (Figure 1).
- The Port's storm drainage system consists of a series of several independent clusters of facilities that directly serve clusters of land, usually consisting of a few adjacent parcels.

- Port properties are also neither continuous nor contiguous along the shoreline. In fact, almost all Port properties consist of one or more small parcels, located at the most downstream reaches of very broad, intensely developed urbanized watersheds.
- Most of these individual Port properties directly discharge into adjacent marine receiving waters or to short, small diameter drainage systems that travel a short distance before directly discharging into the adjacent marine waters.
- The Port's drainage systems are almost entirely separate from the larger, more complex and diverse upstream drainage systems of the City of Seattle.

3.3 PROPERTIES UNDER THE CONTROL OF THE NPDES PHASE I PERMIT

The Seaport and Real Estate Division of the Port of Seattle consists of 1,065 acres of land bordering the Duwamish Waterway, Lake Washington Ship Canal, and Salmon, Shilshole and Elliot bays, as shown in Figure 1. Port property is divided into terminals and piers that serve various Port functions and tenant business, and nineteen parks providing public access to the shoreline. Port facilities in the north and central areas often are noncontiguous, isolated land parcels supporting a variety of marine related land usages.

At the mouth of the Duwamish River, the South Harbor, including Harbor Island, supports several terminals and piers. This area provides multiuse, cargo, and warehousing facilities, rail transfer facilities, and one of two cruise terminals. The central section of the Port includes a second cruise terminal, several piers, and many public access parks bordering Elliot Bay. These piers and terminals support multiuse and general marine services. Terminal 91 at the north end of Elliott Bay includes Piers 90 and 91 and about 100 acres of commercial business property, of which 69 plus acres are vacant. Providing commercial and recreational moorage, Fishermen's Terminal and the Maritime Industrial Center bordering Salmon Bay and the locks and Shilshole Bay Marina on Shilshole Bay are located at the northern terminus of seaport properties.

Of the approximate 1,065 acres of Port properties, less than 25% of these properties are operated and maintained by the Port. The vast majority of the land is leased to over 250 tenants located throughout the seaport area of the Port.

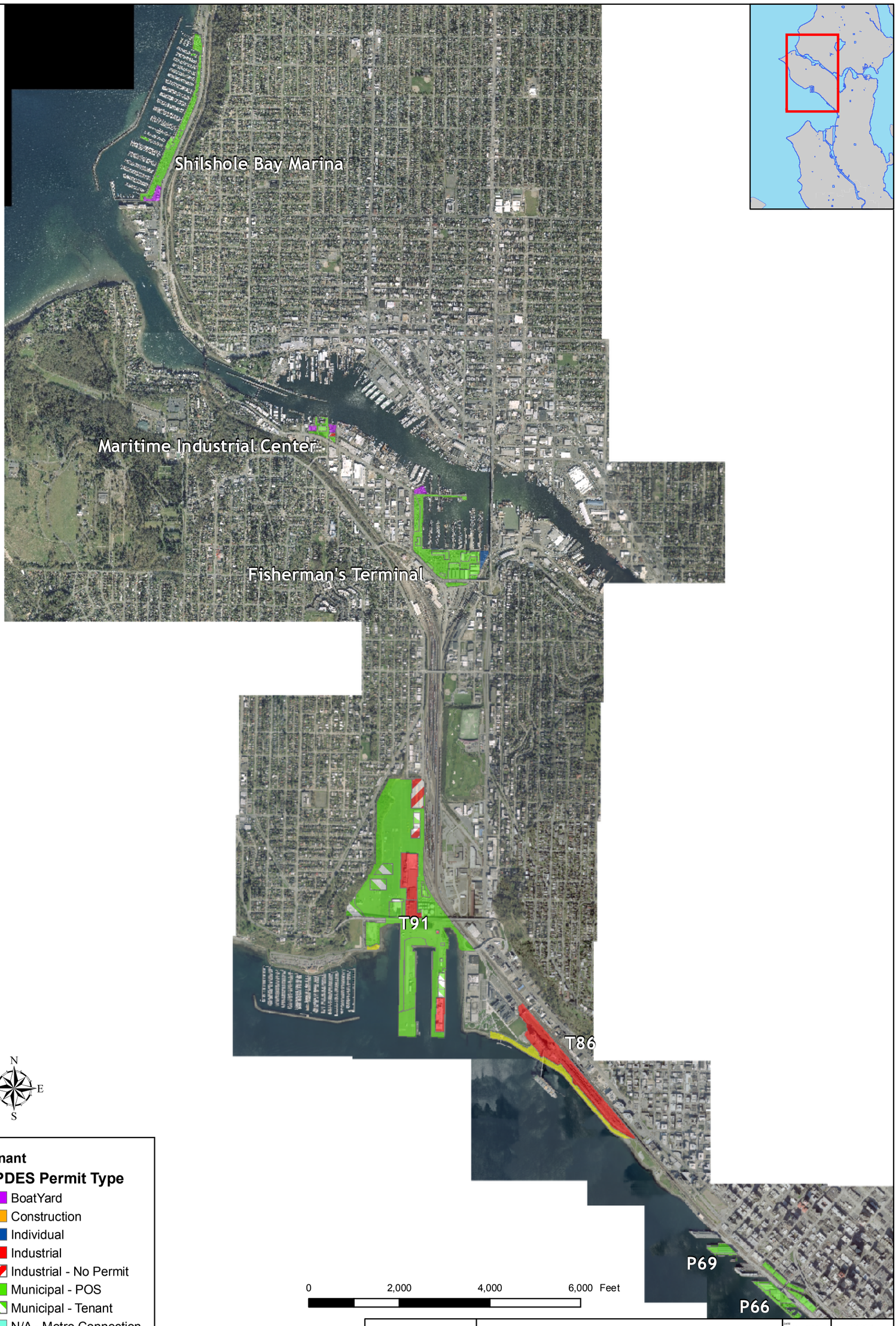

Tenant

NPDES Permit Type

- BoatYard
- Construction
- Individual
- Industrial
- Industrial - No Permit
- Municipal - POS
- Municipal - Tenant
- N/A - Metro Connection
- No Discharge
- Property Boundary

The base aerial photo is USGS 6 inch orthophoto flown in 2005. Permit and tenant boundaries are approximated & not surveyed.

Aspect consulting earth + water

Seaport Division Vicinity Map (North Extent)

Port of Seattle - Seattle, Washington

DATE Mar 2008	PROJECT NO. 070075
DESIGNED BY PPW	
DRAWN BY PPW	FIGURE NO. 1A
REVIEWED BY PPW	

T:\projects_8\SeaPortProgram\EnclosnessMon\NPDES_permits_north.mxd

This Page Intentionally Left Blank.

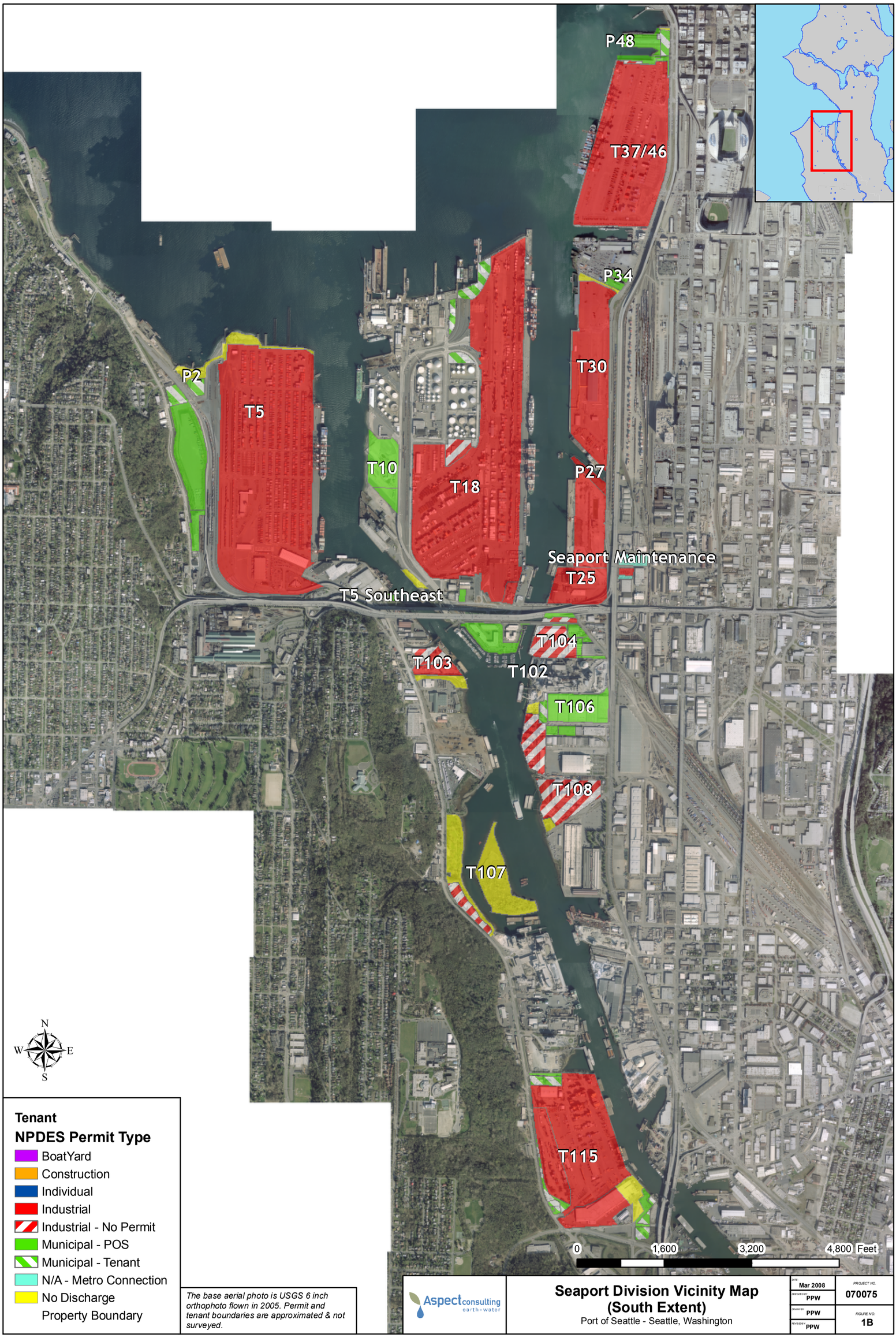

The base aerial photo is USGS 6 inch orthophoto flown in 2005. Permit and tenant boundaries are approximated & not surveyed.

Aspect consulting earth • water

Seaport Division Vicinity Map (South Extent)

Port of Seattle - Seattle, Washington

DATE Mar 2008	PROJECT NO. 070075
DESIGNED BY PPW	
DRAWN BY PPW	FIGURE NO. 1B
REVISED BY PPW	

T:\projects_8\SeaPort\ProgramEffectiveness\MonNPDES_permits_north.mxd

This Page Intentionally Left Blank.

3.3.1 Selection of Properties for Stormwater Monitoring

Based on examination of permit and land use information, along with inspection of the stormwater drainage systems, the 287 acres of Municipal Phase I Permit properties were selected as areas where the required stormwater monitoring under the NPDES Phase I Municipal Stormwater Permit could be performed.

Table 1 shows the breakdown of Port (Seaport and Real Estate Divisions) properties categorized by NPDES permit type. The evaluation criteria that we considered to select possible stormwater monitoring sites are summarized in the footnotes in Table 1.

Table 1. Port of Seattle properties categorized by NPDES permit type

Permit Type	Acres	Percent	Comments	Property Operated and Maintained by:	Selected to Conduct Stormwater Monitoring
Municipal Phase I Permit[1]	286.9	26.9%	Port and tenant operated and maintained properties that are not covered by other General permits.	Port and Tenants	√
General Permits[2]	717.3	67.4%	Industrial, Boatyard, or Individual permits. Industrial-NP (no permit) properties included.	Tenant	
No Discharge or Sewer Connected[3]	61.1	5.7%	Park with no pesticide or herbicides or sewer connected properties.	Port	
Total:	1065.3				

[1]**Municipal Phase I Permit**
These properties are covered under the Municipal Phase I Stormwater Permit; therefore, they were evaluated to select a monitoring site that will be used to establish a baseline for evaluation of the effectiveness of stormwater management strategies developed and implemented by the Port.

[2]**General Permits - Properties Covered by General Permits and Under Tenant Control**
The stormwater drainage systems at these sites are specifically designed to discharge directly to surface waters. There is little, if any, co-mingling of drainage from other sites. Direct discharge to surface waters, minimal co-mingled storm systems, and the fact that the property operation and maintenance is controlled strictly by the tenant, eliminate these sites from consideration to effectively evaluate the long-term effectiveness of stormwater management strategies developed and implemented by the Port.

[3]**No Discharge or Sewer Connected**
Properties with no discharge are public access parks and natural habitat areas that do not discharge to surface water. The Seaport Maintenance Shop is connected to City of Seattle storm sewer. These properties are not suitable for long-term stormwater monitoring.

3.3.2 Selection of Most Representative Land Use

The 287 acres of Municipal Phase I Permit properties were further categorized by land use, as shown in Table 2. Approximately 141 acres (or 49%) of these properties are identified as vacant. Vacant properties are in most cases under lease negotiation and permit coverage, land use, and stormwater drainage systems are subject to change.

Of the remaining properties, the predominant use, not under roof coverage, is parking lots. This area represents approximately 45 acres (15.6%) of land. For this reason, parking areas have been selected as the most appropriate land use from which a representative stormwater drainage basin and outfall can be selected to perform stormwater monitoring. The process used to select a monitoring site from among these properties is described in greater detail in Section 7.0.

Table 2. Dominant land uses in Port of Seattle NPDES Phase I Municipal Permit area

Land Use	Acres	Percent	Comments	Selected to Conduct Stormwater Monitoring
Uncovered Parking	44.8	15.63%	Parking areas exposed to rainfall	√
Covered Parking and Office Areas	80.8	28.10%	All of this area is covered and not exposed to rainfall	
Other	20.1	7.07%	Includes hotel, landscaping, chassis and container storage, cruise terminal, fast food, and fueling	
Vacant	141.2	49.2%	Currently not occupied. Land use and stormwater drainage systems are subject to change as leases are negotiated	
Total Port Municipal Permit Area:	286.9			

4.0 PROJECT DESCRIPTION

This section presents the goals and objectives of the project; describes the boundaries, target populations and practical constraints of the study; and specifies the information and data required to meet the study objectives.

4.1 PROJECT GOALS

The goal of this project is to collect and characterize stormwater and sediment samples from the Port of Seattle to fulfill the requirements of Section S8 of the NPDES Phase I Municipal Stormwater Permit.

4.2 PROJECT OBJECTIVES

The five objectives of the project include:

(1) Identify one stormwater basin and outfall to sample within the Port's property that is representative of Port land use/operations covered by the NPDES Phase I Municipal Stormwater Permit (per Permit §S8.D.1);

(2) Collect representative grab and composite water samples during baseflow and storm flow events from the selected outfall (per Permit §S8.D.2.a-c, e, g);

(3) Collect a representative sediment sample from the selected outfall (per Permit §S8.D.2.f);

(4) Collect a seasonal "first-flush" stormwater sample for toxicity testing (per Permit §S8.D.2.d); and

(5) Validate and report the sampling results to Ecology (per Permit §S8.H.1.a).

4.3 INFORMATION REQUIREMENTS

Information required to meet the study objectives include:

- Land use and drainage area of the selected drainage basin (Objective 1);
- Concentrations of constituents of concern in samples collected from the Port's outfall (water and sediment) (Objectives 2-5);
- Continuous record of rainfall data, and specifically, rainfall data prior to and during sampled storm events, including antecedent dry period and total rainfall during each sample event (Objectives 2-5);
- Continuous record of outfall flow data (storm and base flows), and specifically, flow data during sampled storm events (Objectives 2, 5); and
- Toxicological results and associated analytical constituent concentrations (Objectives 3, 5).

4.4 DATA COLLECTION

The sampling design for stormwater monitoring under Section S8.D of the Permit contains three primary components that will be conducted at the selected monitoring site through the remainder of the Phase I Permit cycle:

- Stormwater sampling,
- Toxicity sampling, and
- Sediment sampling.

4.4.1 Stormwater Sampling

Per Section S8.D.2 of the Permit, flow-weighted composite and grab sampling techniques will be used to collect stormwater samples from up to eleven qualifying storm events (as define in Section 7.3) throughout each water year. During each targeted storm event, grab samples will be collected at the stormwater monitoring site early in the storm (per Permit §S8.D.2.e). Baseflow, if it is present, will be sampled up to three times each year.

Continuous flow data will be collected at the selected site during all storm events to establish a rainfall and runoff relationship (per Permit §S8.D.2.b). Total annual pollutant loads, and seasonal pollutant loads will be calculated for each required parameter at the monitoring site based on Event Mean Concentrations (EMCs) (per Permit §S8.H.1.a).

4.4.2 Toxicity Sampling

Toxicity sampling will be conducted using composite sampling equipment at the stormwater monitoring site. Storm sampling will occur during the late summer or early fall in an attempt to sample a first-flush storm event (per Permit §S8.D.2.d). In addition to collecting a stormwater sample for toxicity testing, stormwater will also be collected at the same time for chemical analysis. The purpose of the chemical analysis conducted concurrently with toxicity testing is to identify toxic substances that may be present. Further, the chemical analysis can also indicate the presence of interferences to the toxicity test.

4.4.3 Sediment Sampling

Sediments will be collected at the stormwater monitoring site using a sediment trap or similar device. Collected sediments will be analyzed annually for parameters that have shown to be associated with stormwater discharges.

4.5 TARGET POPULATION

For monitoring programs such as this, observations are made or samples are collected to describe "target populations". In this case, the target populations are characteristics of stormwater coming from Port properties covered under the NPDES Phase I Municipal Stormwater Permit. Specific characteristics (or target populations) include:

- Stormwater and baseflow flow (both flow rate and volume),
- Concentrations and loads of specific constituents in stormwater and baseflow, and
- Concentrations and loads of specific constituent in sediment carried by stormwater.

One representative drainage basin will be sampled to characterize these populations.

4.6 STUDY BOUNDARY

The study area boundaries encompass Port-owned and operated land covered under the jurisdiction of the NPDES Phase I Municipal Stormwater Permit.

4.7 PRACTICAL CONSTRAINTS

Practical constraints facing this monitoring project include limitations around site selection, physical characteristics of the monitoring site, operational activities at the monitoring site, equipment limitations, and logistical challenges inherent to stormwater sampling.

- Limitation around site selection include:
  - Candidate sites are limited to areas that are not already covered by either a General permit or an individual NPDES permit issued by Ecology that covers stormwater discharges (e.g., Industrial Stormwater Permit) or are Tenant-operated.
  - It's the Port's intention to perform sampling on areas covered by the NPDES Phase I Municipal Stormwater Permit and not those areas covered under an Industrial Stormwater Permit. The rationale for this is that the Industrial permitted properties are already under a stormwater monitoring program approved by Ecology, as a condition of their permit.
  - Another challenge that Port's face is that much of their property is under the control of its tenants and not under the direct control of the Port. Due to this restriction, it is the Port's intention to sample Port controlled properties where the Port has the most control of its municipal stormwater program and can implement its own BMPs.

  - The group of candidate sites are small, isolated properties, i.e. "slivers by the water". These properties have small drainage basins with short detention times and the drainage systems are often affected by backwater due to tidal influences.
- Characteristics of the selected site's storm drain system and hydraulics can constrain how monitoring can be conducted. Pipe diameters, slopes, expected water depths, and backwater conditions all constrain what flow measurement methods can be used and how accurately flows can be measured. If the most suitable location for monitoring is a manhole structure rather than an exposed outfall pipe, then confined space entry will be required to install, operate, and maintain monitoring equipment. Storm drain features also constrain where sediment traps can be deployed. For instance, some of the storm drain junction structures (manholes and catch basins) may not have sumps where traditional sediment traps can be deployed. Also, small-diameter storm drain pipes are not ideal for deploying sediment traps.
- Operations at the site constrain monitoring activities by field crews. Monitoring locations may be in traffic areas that will need to be cordoned off when a field crew is operating at the site. This may disrupt the operation of the site and the operations of the field crew. If the monitoring location is in an active parking area, steps would need to be taken to maintain access to the monitoring site.
- Monitoring equipment limitations include the ability of automatic samplers to collect representative samples of stormwater. OEM auto-samplers have a limited sample storage capacity, which limits the frequency and duration of sample collection during an event. When deploying sediment traps, it is difficult to predict how much sediment will be captured by a sediment trap during the expected deployment period. If sediment yields are higher than expected, a trap could fill faster than anticipated. If sediment yields are lower than expected, the trap might not capture enough sediment during the planned deployment period for performance of all desired physical and chemical analyses.
- Stormwater monitoring poses inherent logistical challenges because the activity relies on an event (precipitation) that can only be forecasted in the near-term with limited reliability. Thus, mobilization of field staff for a potential sampling event cannot happen more than a couple of days ahead of a forecasted storm.
- Some chemical parameters required by the permit cannot be collected using automatic samplers. These samples will be collected manually. During an event, staff must be mobilized to collect the manual grab sample on short notice and must visit the site early in the storm to do so. Given that qualifying storm events may begin at night or during weekends or holidays, it may be difficult to schedule staff resources.

4.8 DECISION MAKING

The results of this monitoring effort are not intended for use in making specific decisions. In a broader context, results will allow regional agencies (e.g., Ecology) to gauge whether comprehensive stormwater management programs are making progress towards the goal of reducing the amount of pollutants discharged in stormwater and protecting water quality.

5.0 ORGANIZATION AND SCHEDULE

The following section identifies the project team, discusses the project schedule, identifies special training required for project implementation, and describes the process of revising this document.

5.1 ROLES AND RESPONSIBILITIES

The table below contains a list of the participants in the major aspects of the project and personnel responsible for updating the QAPP.

Table 3. Project participant roles and responsibilities

Position	Roles and Responsibilities
Department of Ecology Permit Coordinator / Department of Ecology Northwest Region	Responsible for reviewing and approving QAPP and project deliverables from Port of Seattle to Department of Ecology.
Project Manager / Port of Seattle	Responsible for overall management of the Port's NPDES Phase I compliance activities. Monitors and assesses the quality of work. Responsible for verifying the QAPP is followed and the project is producing data of known and acceptable quality. Ensures adequate training and supervision of all monitoring and data collection activities. Complies with corrective action requirements.
Technical Manager / Port of Seattle	Responsible for the development, approval, implementation, and maintenance of the QAPP and technical coordination with other project team members.
Quality Assurance Manager / Port of Seattle	Responsible for validation and verification of data collected.
Project Data Manager / Port of Seattle	Responsible for the acquisition, verification, and transfer of data.
Consultant Project Manager	Responsible for Consultant project management and coordination with project team member and Consultant staff. Develops, facilitates, and conducts monitoring system audits.
Consultant Technical Lead	Manages and oversees monitoring activities and data management conducted pursuant to the QAPP by the Consultant.
Storm Controller	Manages and oversees monitoring activities and sampling decisions for a specific targeted storm event. This position could be filled by the Technical Manager, the Consultant Team Lead, or other Designee.

Position	Roles and Responsibilities
Analytical Laboratory Project Manager	Responsible for supervision of laboratory personnel involved in generating analytical data for this project. Responsible for oversight of all operations, ensuring that all quality assurance/quality control (QA/QC) requirements are met, and documentation related to the analysis is complete and accurately reported. Enforces corrective action, as required.
Analytical Laboratory Quality Assurance Officer	Monitors the implementation of the Quality Assurance Plan (QAP) and the QAPP within the analytical laboratory to ensure complete compliance with QA objectives as defined by the contract and in the QAPP. Performs validation and verification of data before the report is transmitted to the Port.
Toxicology Laboratory Project Manager	Responsible for supervision of laboratory personnel involved in generating toxicology data for this project. Responsible for oversight of all operations, ensuring that all quality assurance/quality control (QA/QC) requirements are met, and documentation related to the toxicological analysis is complete and accurately reported. Enforces corrective action, as required.
Toxicology Laboratory Quality Assurance Officer	Monitors the implementation of the Quality Assurance Plan (QAP) and the QAPP within the toxicology laboratory to ensure complete compliance with QA objectives as defined by the contract and in the QAPP. Performs validation and verification of data before the report is transmitted to the Port.

5.2 SCHEDULE

The following tables indicate the *approximate* implementation schedule for permit-related activities for stormwater monitoring.

Table 4. Anticipated project schedule

Calendar Year 2008				
Activity	**Anticipated Date of Initiation**	**Anticipated Date of Completion**	**Deliverable**	**Deliverable Due Date**
Project startup activities	9/9/08	Ongoing	Project planning; mon. equip. procurement, installation and testing; staff training	Not reported to Ecology
Continuous flow and precipitation recording	11/30/08	Ongoing	Establish a baseline rainfall/runoff relationship	Not reported to Ecology

Calendar Years: 2009 – 2012				
Activity	**Anticipated Date of Initiation**	**Anticipated Date of Completion**	**Deliverable**	**Deliverable Due Date**
Complete project startup activities	Continuing	3/9/2009	Monitoring equipment installation and testing; staff training	Not Reported to Ecology
Continuous flow and precipitation recording	1/1/2009 10/1/2009 10/1/2010 10/1/2011	9/30 each year	Stormwater Monitoring Report	3/31/2010 3/31/2011 3/31/2012
Wet-weather storm events	3/9/2009 10/1/2010 10/1/2011	4/30 each year	Stormwater Monitoring Report(1)	3/31/2010 3/31/2011 3/31/2012
Dry-weather storm events	5/1 each year	9/30 each year	Stormwater Monitoring Report	3/31/2010 3/31/2011 3/31/2012
Toxicity sampling (first-flush event)	8/1 each year	9/30 each year(2)	Stormwater Monitoring Report and TI/RE (if applicable)	3/31/2010 3/31/2011
Sediment sampling	3/9/2009 10/1/2009 10/1/2010 10/1/2011	9/30 each year	Stormwater Monitoring Report	3/31/2010 3/31/2011 3/31/2012
Data validation	4/2009 11/2010 11/2011	1/30/2010 1/30/2011 1/30/2012	Stormwater Monitoring Report	3/31/2010 3/31/2011 3/31/2012

(1) Toxicity sampling can extend into October if suitable weather conditions exist.
(2) Submitted with Annual Report.

5.3 SPECIAL TRAINING NEEDS/CERTIFICATION

Project staff will receive the following training/certification as appropriate for their role in the project:

- Any field staff involved with monitoring equipment installation or equipment maintenance requiring confined space entry will have completed confined space entry training.
- Any field staff needing to access the monitoring sites will have undergone necessary Port security clearance, badging, and safety training.
- Field staff will receive training in sampling equipment operation, maintenance and calibration procedures.
- Field staff will receive training in all necessary sample collection, sample handling, and chain of custody for sediment, stormwater grab, and stormwater composite sampling.

5.4 REVISIONS

Ecology must review and approve this QAPP for Stormwater Monitoring under Section S8.D of the Phase I Permit (per Permit §S8.C.2). Only substantial changes to the Stormwater Monitoring Program will require that the QAPP be revised and re-submitted to Ecology for approval. Changes requiring re-submittal of the QAPP to Ecology are considered external revisions.

Smaller changes to the Stormwater Monitoring Program, not requiring Ecology approval, are considered internal revisions. Justification, summaries, and details of internal revisions will be documented in a QAPP Addendum and will be distributed to all persons on the distribution list by the Project Manager. QAPP Addendums will be compiled and transmitted no more frequent than quarterly.

6.0 QUALITY OBJECTIVES

This section presents the data quality objectives of the project and measurement quality indicators that will be used to assess stormwater and sediment data quality and usability. Data quality objectives will be achieved through careful attention to sampling, measurement, and quality assurance/quality control (QA/QC) procedures, as described in this plan.

6.1 DATA QUALITY OBJECTIVES

Data quality objectives (DQOs) are both qualitative and quantitative statements that define the type, quality, and quantity of data necessary to support project decisions. The DQOs for the Port of Seattle's Stormwater Monitoring are as follows:

- The data will be of known precision and accuracy;
- The data will be generated using controlled procedures for field sampling, sample handling and processing, laboratory analysis, and record keeping;
- Reporting limits will be low enough for evaluation against stormwater management program endpoints;
- Data of sufficient quality and quantity will be collected to meet the minimum requirements for calculation of event mean concentration, seasonal pollutant load, and total annual pollutant load calculations; and
- Collected samples will meet the program-specific requirements for representativeness.

The measurement quality objectives for the physical and chemical analysis of water and sediments are summarized in Table 5 and Table 6. The data quality parameters used to asses the acceptability of the data are discussed in the following section.

6.2 MEASUREMENT QUALITY INDICATORS

Data quality and usability are evaluated in terms of performance criteria. Performance and acceptance are expressed in terms of measurement quality indicators (MQIs). The principal indicators of data quality are precision, accuracy, sensitivity, completeness, comparability, and representativeness. These measures are affected by factors in both the field and laboratory. Each term is explained below.

Table 5. Measurement quality objectives for chemical analysis of stormwater

Parameter	Check Stnd/ Lab Control Sample	Lab Replicate	Matrix Spike	Matrix Spike Dup	Surrogate Stnd	Lowest Conc. of Interest
	Accuracy (% Rec)	Precision (RPD)	Accuracy (% Rec)	Precision (RPD)	Accuracy (% Rec)	(units)
Conventionals						
TSS	80-120	20%	NA	NA	NA	1.0 mg/L
Turbidity	80-120	20%	NA	NA	NA	± 0.2 NTU
Conductivity	80-120	20%	NA	NA	NA	± 1 µmho/cm
Chloride	80-120	20%	75-125	NA	NA	0.2 mg/L
BOD_5	80-120	20%	NA	NA	NA	2.0 mg/L
Hardness	80-120	20%	NA	NA	NA	1.0 mg/L
MBAS	80-120	20%	75-125	NA	NA	0.025 mg/L
Bacteria						
Fecal Coliform	NA	20%	NA	NA	NA	1 CFU/100 mL
Nutrients						
Total phosphorus	80-120	20%	75-125	NA	NA	0.01 mg/L
Orthophosphate	80-120	20%	75-125	NA	NA	0.01 mg/L
TKN	80-120	20%	75-125	NA	NA	0.5 mg/L
Nitrate-nitrite	80-120	20%	75-125	NA	NA	0.01 mg/L
Metals						
Total recoverable (Cu, Zn, Pb, Cd, Hg)	80-120	20%	75-125	NA	NA	0.1–5.0 µg/L
Dissolved (Cu, Zn, Pb, Cd, Hg)	80-120	20%	75-125	NA	NA	0.1 µg/L
Organics						
PAHs	50-140	NA	50-140	40%	50-140	0.1 µg/L
Phthalates	50-140	NA	50-140	40%	50-140	1.0 µg/L
Herbicides	50-140	NA	50-140	40%	50-140	0.01–1.0 µg/L
Pesticides, Nitrogen	50-140	NA	50-140	40%	50-140	0.01–1.0 µg/L
Pesticides, Organo-P	50-140	NA	50-140	40%	50-140	0.01–1.0 µg/L
TPH						
NWTPH-Dx	50-150	NA	50-150	50%	50-150	0.25–0.5 mg/L
NWTPH-Gx	50-150	NA	50-150	50%	50-150	0.25mg/L

(1) Matrix spike duplicate percent recovery for organics and TPH targeted at 50-140% and 50-150%, respectively.

(2) Lowest concentration of interest corresponds to reporting limit targets listed in Appendix 9 of the Phase I Municipal Stormwater Permit and in the additional guidance *Alternative Laboratory Methods Approved by Ecology for Use under the Phase I Municipal Stormwater Permit* (Ecology, 2008).

Table 6. Measurement quality objectives for physical and chemical analysis of sediments

Parameter	Check Stnd/ Lab Control Sample	Lab Replicate	Matrix Spike	Matrix Spike Dup	Surrogate Stnd	Lowest Conc. of Interest
	Accuracy (% Rec)	Precision (RPD)	Accuracy (% Rec)	Precision (RPD)	Accuracy (% Rec)	(units)
Conventionals						
Total solids	80-120	20%	NA	NA	NA	NA
Total organic carbon	80-120	20%	75-125	NA	NA	0.10%
Grain Size	NA	5%	NA	NA	NA	NA
Metals						
Total recoverable (Cu, Zn, Pb, Cd, Hg)	80-120	20%	75-125	NA	NA	0.1–5.0 mg/Kg
Organics						
PAHs	50-140	NA	50-140	40%	50-140	70 µg/Kg
Phthalates	50-140	NA	50-140	40%	50-140	70 µg/Kg
Phenolics	50-140	NA	50-140	40%	50-140	70 µg/Kg
PCBs	50-140	NA	50-140	40%	50-140	80 µg/Kg
Herbicides	50-140	NA	50-140	40%	50-140	1 µg/Kg
Pesticides, Organo-P	50-140	NA	50-140	40%	50-140	25–50 µg/Kg

(1) Matrix spike duplicate percent recovery for organics targeted at 50-140%.

(2) Lowest concentration of interest corresponds to reporting limit targets listed in Appendix 9 of the Phase I Municipal Stormwater Permit and in the additional guidance *Alternative Laboratory Methods Approved by Ecology for Use under the Phase I Municipal Stormwater Permit* (Ecology, 2008), expressed on a dry-weight basis.

6.2.1 Precision

Precision is a measure of the agreement or repeatability of a set of replicated results obtained from duplicate analysis made under identical conditions. Precision is estimated from analytical data and cannot be measured directly. Often, poor precision is due to field variability, problems with sampling and sub-sampling procedures, contamination, or poor sensitivity of the laboratory methods. Variability in the field can often be minimized through the use of compositing procedures.

Analytical precision is measured through matrix spike/matrix spike duplicates samples for organic analyses and through laboratory duplicates samples for inorganic analyses. Laboratory duplicates are generally prepared by splitting one sample into two and performing a separate analysis on each split. Matrix spikes and matrix spike duplicates are prepared by adding a known concentration of analyte to a sample or to a laboratory duplicate and determining the concentration of the sample plus the spike. The two values

(sample and duplicate, or spike and spike duplicate) are compared to provide an estimate of the precision of the laboratory method. The precision of a duplicate determination can be expressed as the relative percent difference (RPD), and is calculated as

$$RPD = \left[\frac{|X_1 - X_2|}{\frac{(X_1 + X_2)}{2}} \right] \times 100$$

Where:

RPD = relative percent difference
X_1 = native sample
X_2 = duplicate sample

Guidelines for project analytical and field precision measurements are discussed in Section 10.0. Analytical precision will be evaluated against quantitative RPD performance criteria presented in Table 5 and Table 6. Currently, no performance criteria have been established for field duplicates, thus data will not be qualified based solely on field duplicate precision.

6.2.2 Accuracy

Accuracy is a measure of the agreement between an experimental determination and the true value of the parameter being measured. Analytical accuracy may be assessed by analyzing known reference materials or by analyzing "spiked" samples with known standards (laboratory control samples, matrix spike, and/or surrogates). Spiking of reference materials into a sample matrix is the preferred technique because it provides a measure of potential matrix effects on analytical accuracy. Factors that influence analytical accuracy include laboratory calibration procedures, sample preparation procedures, and laboratory equipment or deionized water contamination. Accuracy can be expressed as a percentage of the true or reference value, or as a percent recovery in those analyses where reference materials are not available and spiked samples are analyzed. Analytical accuracy, expressed as percent recovery (P), is calculated as:

$$P = \left[\frac{(SSR - SR)}{SA} \right] \times 100$$

Where:

P = percent recovery
SSR = spiked sample result
SR = sample result (native)
SA = the spiked concentration added to the spiked sample

Guidelines for laboratory accuracy are discussed in Section 10.0. Analytical accuracy will be evaluated against quantitative laboratory control sample, matrix spike, and surrogate spike (organics) performance criteria presented in Table 5 and Table 6.

6.2.3 Sensitivity

Sensitivity is the measure of the concentration at which an analytical method can positively identify and report analytical results. The sensitivity of a given method is commonly referred to as the detection limit. Although there is no single definition of this term, the following terms and definitions of detection will be used, as appropriate.

- **Instrument detection limit** (IDL) is the minimum concentration that can be measured from instrument background noise.
- **Practical quantification limit** (PQL) or **method reporting limit** is the concentration of the target analyte that the laboratory has demonstrated the ability to measure within specified limits of precision and accuracy during routine laboratory operating conditions. This value is variable and highly dependent on the sample matrix. It is the minimum concentration that will be reported as "unqualified" by the laboratory.
- **Method detection limit** (MDL) is a statistically determined concentration. It is the minimum concentration of an analyte that can be measured and reported with 99 percent confidence that the analyte concentration is greater than zero as determined in the same or similar sample matrix. Due to the lack of information about analytical precision at this level, sample results greater than the MDL, but less than the PQL, will be laboratory qualified as "estimated".

Analytical methods, method detection limits, and method reporting limits are included in Section 9.0. The lowest concentrations of interest for the analysis of water and sediments are shown in Table 5 and Table 6, respectively, and correspond to the reporting limit targets listed in Appendix 9 of the Phase I Municipal Stormwater Permit and in the additional guidance *Alternative Laboratory Methods Approved by Ecology for Use under the Phase I Municipal Stormwater Permit* (Ecology, 2008).

6.2.4 Representativeness

Representativeness is a qualitative measure of the degree to which sample data accurately and precisely represent a characteristic environmental condition, or more specifically, site conditions. Representativeness is a subjective parameter and is used to evaluate the efficacy of the sampling plan design. It can be assessed through the analysis of field duplicate samples and other measures. Field variability can be minimized by employing compositing techniques since samples generate an average of site conditions.

Samples will be collected so they are adequately representative of the volume and nature of the monitored constituents of interest. To meet this goal, samples will be collected according to appropriate procedures and should consider the following types of representativeness criteria:

- The rainfall event must be a "target event";
- Grab samples and/or composite samples must meet certain criteria governing the method and timing of the sampling process relative to the storm discharge hydrograph; and
- All analyses must be conducted within method-required holding times.

Samples may be deemed "non-representative" and data rejected if any of these criteria are not met. Target storm event criteria for routine stormwater monitoring and seasonal "first-flush" toxicity is described in Section 7.0.

To meet analytical holding times, samples analyses may have to be initiated before all other criteria are confirmed (e.g., confirmation that a rainfall event met the target storm event criteria). For grab samples, the holding time will initiate when the grab sample is collected and placed in the sample bottle. For composite samples, the holding time will initiate when the last subsample is collected.

6.2.5 Completeness

Completeness is defined as the percentage of measurements judged to be valid compared to the total number of measurements made or planned for a specific sample matrix and analysis. It includes both targeted sample collection by the field team, and analytical work done by the laboratory. Essentially, it is used to assess how field situations and laboratory problems affected the overall success of the data collection effort. Completeness is calculated by the following:

$$Completeness = \frac{Valid\ \ Measurements}{Total\ \ Measurements} \times 100$$

All valid data will be used for this project. Data that has been qualified as estimated because the quality control criteria were not met will be considered valid for the purpose of assessing completeness, whereas data that have been qualified as rejected will not be considered. During the data validation process, an assessment will made of whether the valid data are sufficient to meet the requirements listed in Section S8.D of the Permit. If sufficient valid data are not obtained, corrective actions will be initiated by the Project Manager or his/her designee.

6.2.6 Comparability

Comparability is a qualitative measure designed to express the confidence with which one data set may be compared to another. Sample collection and handling techniques, sample matrix type, and analytical method all affect comparability. Comparability is limited by other MQIs because data sets can be compared with confidence only when precision and accuracy are known. Data from one phase of an investigation or from a separate investigation can be compared to others when similar methods are used and similar data packages are obtained.

7.0 SAMPLING PROCESS DESIGN (EXPERIMENTAL DESIGN)

This section summarizes the process used to select the monitoring site, describes the monitoring site, and describes the approach for targeting storm events and collecting grab and composite samples. Additionally, the approaches for collecting the seasonal first-flush toxicity sample and sediment sampling are described.

7.1 MONITORING SITE SECTION PROCESS

Parking areas are the most representative land use for conducting stormwater monitoring required under Section S8.D of the Phase I Permit (see Section 3.3). The Port used the following process to select a monitoring site at a representative property with this predominant land use:

Site Selection Process

Is the property a Port of Seattle property?

Yes

Is the property already covered by an Ecology General or Individual Permit?

No

Does the property represent the most typical land use?

Yes

Property selected

Table 7 provides a summary of the results of the site selection process for specific Port properties detailing reasons for elimination of properties from consideration as sites for long-term stormwater monitoring.

The Port determined that Shilshole Bay Marina is an appropriate property for conducting stormwater monitoring. Approximately 69 percent of the 17.4-acre upland property is a parking lot, making it the second largest parking area on Municipal Phase I Permit property. Shilshole Bay Marina is also the selected site for the Targeted SWMP Effectiveness Monitoring component of the Port's long-term monitoring program (per Permit §S8.E). Sediment data collected for Targeted Effectiveness Monitoring will augment data collected under this QAPP.

Table 7. Reason for selection or elimination of sites for performing stormwater monitoring

Location	Site	Acres	Selected	Reason for Selection or Elimination
North Harbor	Shilshole Bay Marina	16.0	√	Site selected; 69% of the site represents the predominant land use of uncovered parking lot; site use and stormwater system config. stable.
	Terminal 91	143.3		Drainage from offsite non-Port property; 69+ acres (49%) are vacant so use and stormwater system subject to change; 12+ acres working with tenant to acquire Industrial Permit; generally, this property use is in flux, atypical, and not suitable for long-term stormwater mon.
	Terminal 86	34.5		Industrial Permit with direct discharge to surface water.
	Fisherman's Terminal	28.2		Use at this property is very similar to that of Shilshole Bay Marina, the site chosen; however, limited access to outfalls makes monitoring problematic.
	Maritime Industrial Center	4.7		Boatyard Permits with direct discharge to surface water; remainder of property is covered by buildings or used for storage and not representative of predominant land use.
Central Harbor	Terminal 37/46	96.1		Industrial Permit with direct discharge to surface water.
	Pier 66	12.6		Majority of property is office buildings & covered parking garage.
	Pier 69	3.0		Majority of property is office buildings.
	Pier 48	2.7		Sale of property is under negotiation.
South Harbor	Terminal 5	206.3		Industrial Permit with direct discharge to surface water.
	Terminal 18 / HIC	189.1		Industrial Permit with direct discharge to surface water.
	Terminal 115	98.7		Industrial Permit with direct discharge to surface water.
	Terminal 30	48.6		Industrial Permit with direct discharge to surface water.
	Terminal 24/25	36.7		New lease and redevelopment in progress. Will fall under Industrial Permit with direct discharge to surface water.
	Terminal 107	32.1		Working with tenant to acquire Industrial Permit. The majority of this property is natural habitat with no discharge.
	Terminal 106	27.7		Vacant – use and stormwater system subject to change when new lease is negotiated. Majority property covered by vacant warehouse.
	Terminal 108	17.1		Industrial Permit with direct discharge to City of Seattle storm sewer then to surface water.
	Terminal 104	16.3		Working with tenant to acquire Industrial Permit.
	Terminal 10	14.7		Vacant – use and stormwater system subject to change when new lease is negotiated.
	Terminal 102	8.7		Majority of area is office building with relatively small parking area.
	Terminal 103	8.1		Industrial Permit with direct discharge to surface water.
	Pier 16/17	4.3		Too small (< 5 acres).
	Pier 2	4.3		Too small (< 5 acres).
	Seaport Maintenance	3.8		Industrial Permit with direct discharge to City of Seattle storm sewer then to surface water.
	Terminal 105	2.7		Park – no discharge.
	Pier 27	2.6		Industrial Permit with direct discharge to surface water.
	Pier 34	2.0		Vacant – use and stormwater systems subject to change when new lease negotiated. Majority of property covered by vacant warehouse.
	Terminal 5 SE	0.4		Too small (< 5 acres).
	Total Acres:	1065.5		

7.1.1 Selecting a Monitoring Site at Shilshole Bay Marina

This section describes the Shilshole Bay Marina property and storm drainage system, and explains the process used to select a specific drainage basin at the marina as the stormwater monitoring site.

The Shilshole Bay Marina is located in the northwest area of Seattle on the west shore of Shilshole Bay, as shown in Figure 2. The 99 acre site is long and narrow, bounded on the west by Seaview Avenue West, on the south by Sunset West Condominium Apartments, and on the north by Golden Gardens Park. The marina's on-the-water facilities include monthly moorage for approximately 1,400 sail and power boats, and 2,700 linear feet of guest moorage. The marina's 17.4 acre upland property is predominately parking lot, with small areas occupied by dry moorage for 82 vessels up to 30 feet in length, bathroom/shower buildings, a marina office building, oil disposal stations, and landscaping. The upland property is 4,000 feet long and generally becomes narrower from south to north ranging in width from 300 feet at the south end to 100 feet at the north end of the parking lot.

Figure 3 is a map of the Shilshole Bay Marina storm drainage system (SDS), showing storm drainage basin boundaries, storm drain pipes, storm drain outfalls, and SDS structures such as catch basins, trench drains, and manholes. The Shilshole Bay Marina SDS consists of 31 storm drainage basins. Drainage basins range in size from 0.03 acres to 1.9 acres. Nearly all of the basins drain from the east property boundary to outfalls that discharge at the seawall on the west-side of the upland area. However, five of these outfalls drain small areas located adjacent to the seawall. Four of the 31 outfalls convey storm water runoff from off-site properties as well as from the marina's upland area. Seven other storm drain outfalls that convey only off-site stormwater also discharge at the seawall.

The on-site stormwater collection and conveyance system generally includes grated inlets (trench drains) and catch basins (flow-though type or with sump areas) with runoff conveyed through small-diameter pipes (approx. 8-inch) and manhole structures. Piped outfalls discharge to Shilshole Bay at fairly uniform spacing along the seawall structure.

A preliminary screening process was conducted to eliminate outfalls that: (1) drain small basins, (2) drain off-site properties, or (3) are not predominately parking lot.

This Page Intentionally Left Blank.

Terminals and piers

Parks and jetties

1:4,200

1 inch equals 350 feet

0 175 350 700 Feet

Aspect consulting earth + water

Shilshole Bay Marina Vicinity Map

Port of Seattle

Seattle, WA

DATE: Feb 2008	PROJECT NO. 070075
DESIGNED BY: PPW	
DRAWN BY: PPW	FIGURE NO. 2
REVISED BY: PPW	

T:\projects_8\SeaPort\ProgramEffectivenessMon\SBM_vicinity_map.mxd

This Page Intentionally Left Blank.

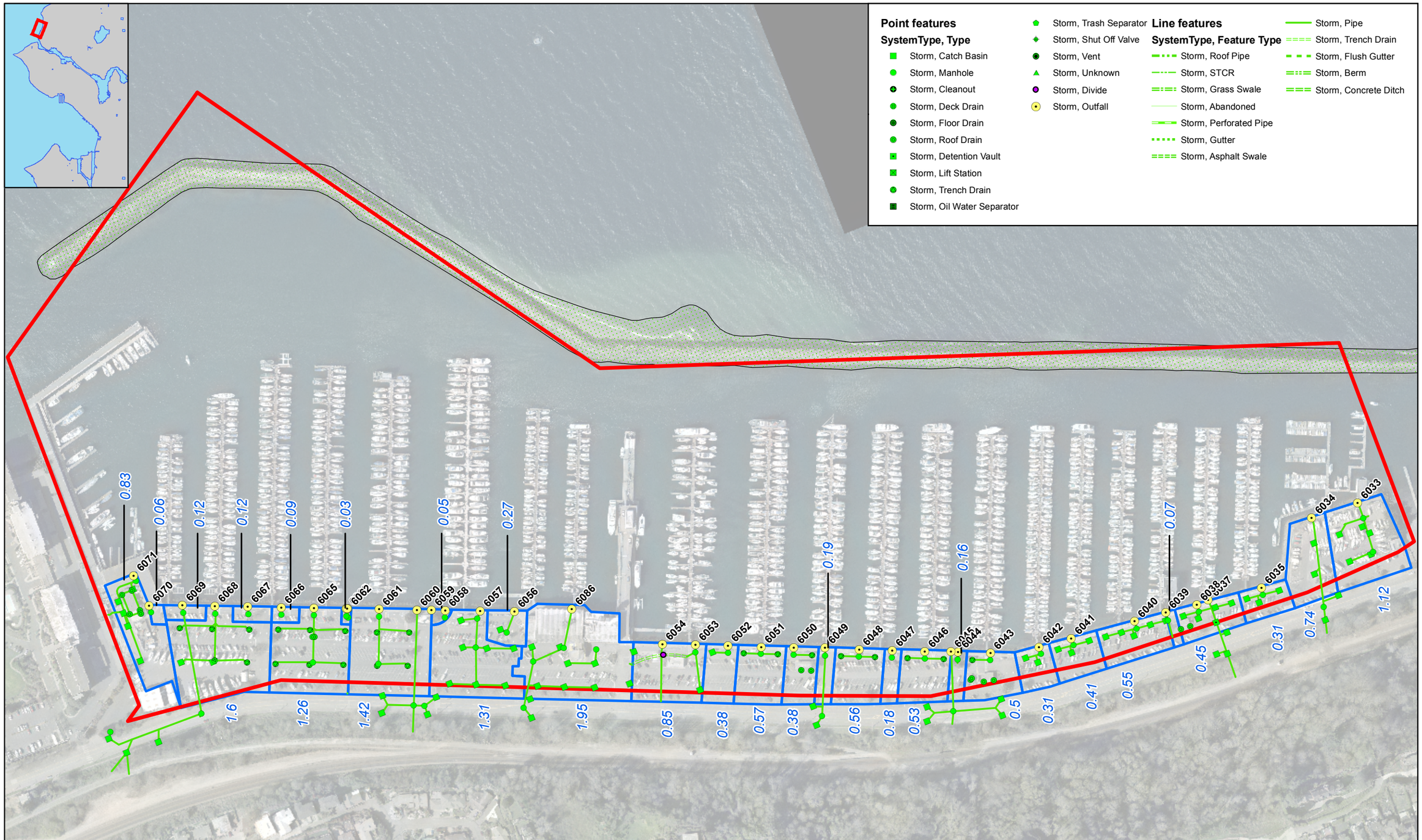

Terminals and piers

Drainage Basins

Parks and jetties

Basins labels = Acreage

1:3,300

1 inch equals 275 feet

0 137.5 275 550 Feet

Aspect consulting earth + water

Shilshole Bay Marina
Storm Drainage System

Port of Seattle - Seattle, WA

DATE: Feb 2008	PROJECT NO. 070075
DESIGNED BY: PPW	
DRAWN BY: PPW	FIGURE NO. 3
REVISED BY: PPW	

T:\projects_8\SeaPort\ProgramEffectivenessMon\SBM_drainage_map.mxd

This Page Intentionally Left Blank.

Three potential stormwater outfalls remained as possible monitoring sites following the preliminary screening process. These include outfall 6065, outfall 6061, and outfall 6057, as shown in Figure 4. These stormwater outfalls and associated drainage basins were further evaluated based on the following criteria:

(1) Characteristics of the basin storm drainage infrastructure;
(2) Characteristics of the SDS terminus structure that influence how flow monitoring and water sampling could occur; and
(3) Physical conditions and activities in the immediate vicinity of the possible monitoring sites that could affect the design, installation, and operation of the monitoring station.

The design features and condition of the storm drainage infrastructure within these three drainage basins were assessed for stormwater monitoring. Drainage basins 6061 and 6065 are in an older part of the parking lot that was last updated in the 1960s. The storm drain system in these two basins has small slot-drain inlets which are not found in most of the remaining parking lot area at Shilshole Bay Marina. Additionally, in basin 6065 there is a shower building and covered area with roof drains plumbed into the storm drainage system. In contrast, the outfall 6057 drainage system has catch basin style inlets more indicative of the remaining marina parking lot area and of current storm drain infrastructure design, in general. Drainage basin 6057 is in a portion of the parking lot that has been recently reconstructed and contains features such as landscaped islands that are typically found in municipal parking lots.

Each of the three outfall pipes terminate at the seawall. None of these outfall locations are easily accessed from either the parking lot or the water. Immediately preceding each outfall is a manhole located approximately 20 feet from the seawall. Each of these manholes receives the entire flow from their respective drainage basins and would be the best locations to monitor stormwater from these drainage basins. In drainage basin 6061 and 6065, these manholes have a single inlet and outlet pipe which would allow for flow monitoring and water sampling of either the inflow or outflow from these structures. In the 6057 drainage basin, the manhole has two inlets and a single outlet, so flow monitoring and water sampling would be limited to the outlet pipe, which should not pose a problem.

Positioning an equipment enclosure and routinely accessing the monitoring location would be problematic for outfalls 6065 and 6061. In both cases, an equipment housing would either block part of a sidewalk or occupy a parking space. Both of these options would interfere with site operations. Also, the likely monitoring location (manhole) in

both drainage 6061 and 6065 is located in a drive lane. Accessing either of these manholes would require the closure of the drive lane, which would disrupt the flow of traffic through the parking lot.

Positioning an equipment enclosure and accessing the monitoring location would be straightforward for outfall 6057. An enclosure could be located in a landscaped area adjacent to the monitoring site (manhole). This manhole is situated at the edge of the parking lot and thus could be accessed without the need to interfere with traffic.

In conclusion, of the three potential monitoring sites at Shilshole Bay Marina, outfall 6057 has storm drainage infrastructure that is most representative of the site and is amenable to monitoring, and provides a monitoring site that is accessible and suitable for long-term monitoring. Based on these attributes, outfall 6057 was selected as the stormwater monitoring site for this project.

7.2 MONITORING SITE DESCRIPTION

This section describes the characteristics of the selected stormwater drainage basin and monitoring site as required by the Phase I Permit (per Permit §S8.D.1.a). Figure 5 is a map of the selected drainage basin showing the location of the monitoring site.

7.2.1 Selected Drainage Basin

Stormwater monitoring to fulfill requirements of the Phase I Permit (per Permit §S8.D) will occur at the drainage basin draining to outfall 6057 (basin 6057). Attributes of Basin 6057 are presented in Table 8.

Table 8. Selected drainage basin attributes

Site Attribute	Site Information
Location	Shilshole Bay Marina Drainage Basin 6057 47° 40' 46" N, 122° 24' 22"W
Drainage area (acres)	1.33
Land use	100% Commercial
% Impervious area	95%
Time of concentration(1)	5 minutes
Rain gage location (latitude/longitude)	47° 40' 50"N, 122° 24' 22"W
Yearly precipitation (in) (2)	33.2

(1) Time of concentration calculations are included in Appendix B.

(2) Based on City of Seattle Rain Gage #45-6008 at Ballard Locks for period 1978-2002 (MGS Engineering 2003).

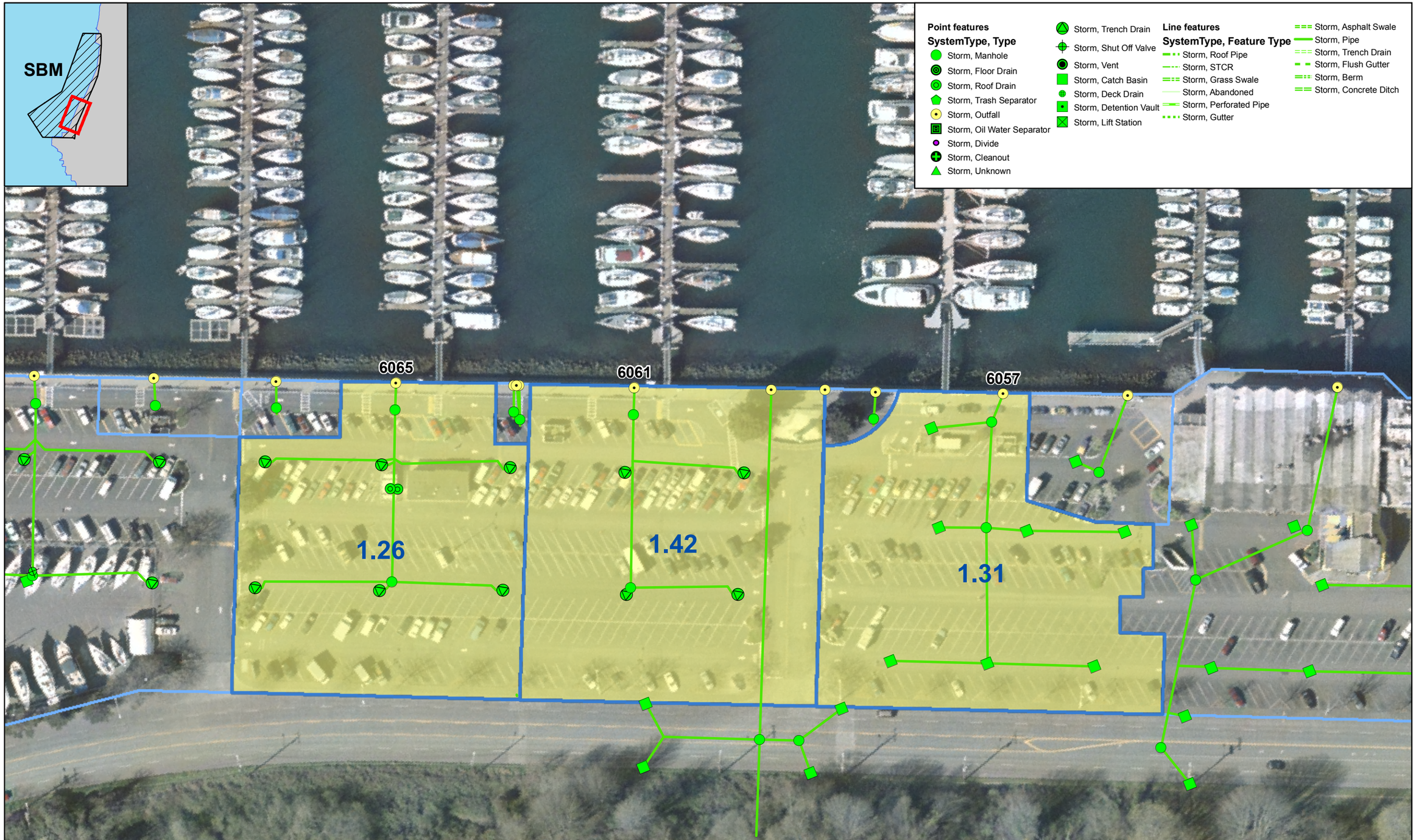

Basins

Basins Considered for Stormwater Monitoring (Labled with basin acreage)

1:900
1 inch equals 75 feet
0 37.5 75 150 Feet

Aspect consulting earth+water

Outfalls and Drainage Basins Considered for Stormwater Monitoring

Shilshole Bay Marina - Port of Seattle - Seattle, WA

DATE: Feb 2008	PROJECT NO. 070075
DESIGNED BY: PPW	
DRAWN BY: PPW	FIGURE NO. 4
REVISED BY: PPW	

T:\projects_8\SeaPort\SW_mon_QAPP\SW_mon_basins.mxd

This Page Intentionally Left Blank.

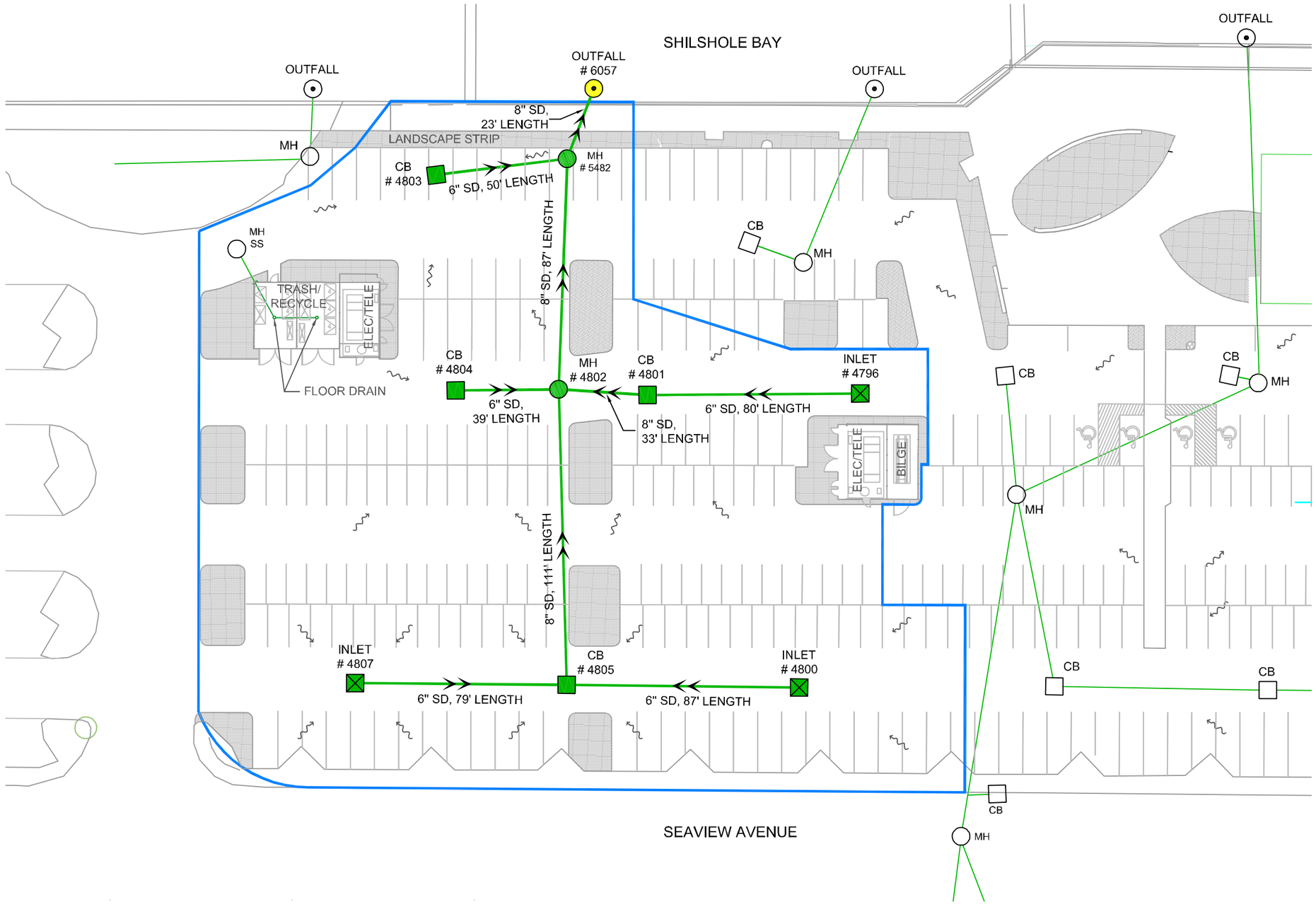

STORM DRAIN PIPING
DRAINAGE BASIN
LANDSCAPE ISLAND/STRIP
SD FLOW DIRECTION
PARKING LOT FLOW DIRECTION
MANHOLE
OUTFALL
CATCH BASIN
INLET

N

20 0 20 40
SCALE IN FEET

otak

Drainage Basin Selected for Stormwater Monitoring (Outfall No. 6057)
Port of Seattle
Seattle, WA

DATE: February 2008	PROJECT NO. 070075
DESIGNED BY: OTAK	
DRAWN BY: OTAK	FIGURE NO. 5
REVISED BY: SCC	

Q:\Seaport\2008-02 Stormwater\SB_basin_2_Aspect.dwg

This Page Intentionally Left Blank.

Drainage basin 6057 is predominately covered by a paved asphalt parking lot. Nine landscaped "islands" are distributed uniformly within the drainage basin, covering a total of 4,870 sq. ft. Adjoining one of these landscaped islands is an area with electrical/telephone system enclosures and trash/recycling containers, which occupies about 1,200 sq. ft. Gravity drains within the trash/recycling container area are connected to the sanitary sewer system. Along the northern basin boundary is another 1,000 sq. ft. fenced area with telephone/electrical system enclosures and a bilge water storage tank that is situated within secondary containment. Along the western boundary of the basin, elevated above the parking lot, is a 6-foot wide landscape strip and an 11-foot wide concrete walkway adjoining the seawall. The landscape strip and sidewalk occupy 635 sq. ft. and 1,040 sq. ft., respectively.

The stormwater outfall 6057 drainage system consists of five north-south oriented lateral lines that drain to a central, east-west oriented line that drains to the outfall. The lateral lines consist of 290 feet of 6-inch diameter pipe, and one 78 foot section of 8-inch diameter pipe. The central line is a 220 foot long, 8-inch diameter pipe. The lateral lines are located on the eastern edge, middle and western edge of the drainage basin. Runoff sheet flows to a total of seven inlet structures and catch basin structures on the lateral lines. The two eastern-most lateral lines terminate at a catch basin structure at the head of the central (east-west) line. The two lateral lines in the middle of the drainage basin connect to the central line at a manhole structure. The western-most lateral line connects to the central line at a second manhole structure, located 23 feet up-pipe from the outfall at Shilshole Bay. This manhole (structure 5482) will serve as the stormwater monitoring site. The two manholes along the central line have slotted covers so they also function as storm drain inlet structures.

7.2.2 Monitoring Site

Stormwater monitoring will occur at storm drain structure 5482, located within the outfall 6057 drainage basin. A diagram of structure 5482 is provided in Figure 6. Structure 5482 is a type 200a manhole with two inlet pipes and one outlet pipe. The 8-inch pipe that enters from the east is the central line, which carries flow from most of the drainage basin (see Section 7.2.1) and is inline with the outlet pipe. The 6-inch pipe which enters from the south-east carries drainage from a lateral line that has one inlet structure. Within the manhole, stormwater flows through troughs shaped into the floor of the structure. An 8-inch wide trough dissects the manhole between the 8-inch inlet pipe and the outlet pipe. The 6-inch inlet pipe discharges to a 6-inch wide trough that intersects the mid-point of the 8-inch trough at roughly a 60-degree angle. Structure 5482 is 4.3 feet deep and the invert elevation of the 8-inch trough at the outlet pipe is 11.93 feet.

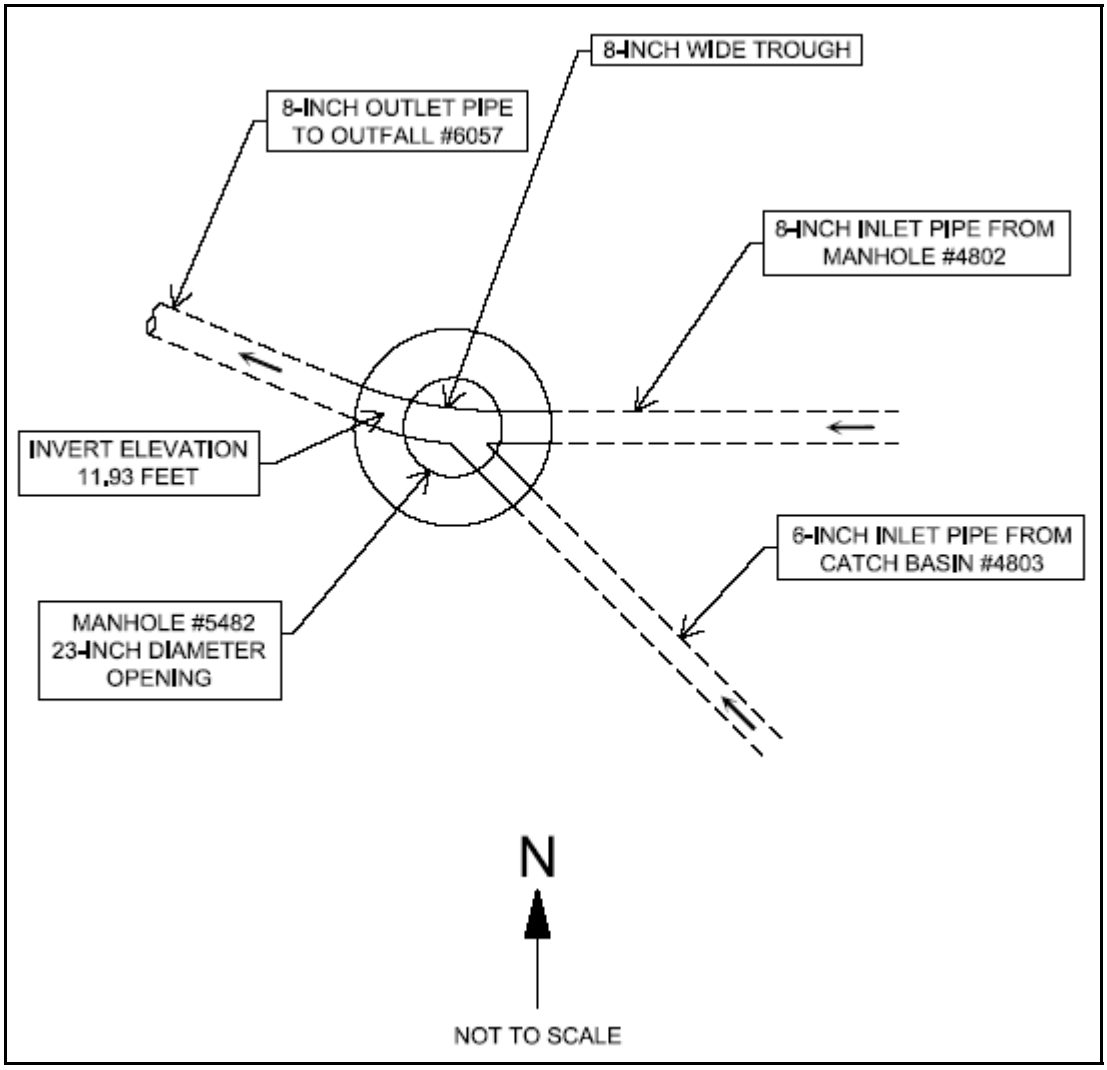

Figure 6. Monitoring site diagram.

This site is suitable for long-term flow monitoring and water sampling. Some of the monitoring system components, such as the flow meter sensors and sampler line intake will be installed within the manhole structure, while most of the equipment will be housed above ground in a secure enclosure.

One challenge posed by this site is that the tide periodically reaches elevations higher than outlet pipe invert, which causes backwater conditions in the manhole. Predictions of tidal elevations for this area from March 2009 to March 2010 indicate that high tide will be above the outlet pipe invert elevation during 58 days (Tides & Currents Pro v. 3.0i, 1993-2001, Nobeltec Corporation) (see Appendix A). On these days, the tide will remain above the outlet pipe invert elevation for between one and three hours. To address this

challenge, a flow-monitoring technology was selected that operates well under backwater conditions (see Section 7.5). Also, to prevent marine water from reaching structure 5482, a check valve will be installed at the end of the outfall pipe. When selecting storms for sampling, attempts will be made to target storm events during periods when the monitoring site is not backwatered from the high tide.

7.2.3 Basin Size to Time of Concentration

The drainage basin for outfall 6057 encompasses 1.33 acres upstream of the monitoring location. The drainage basin is composed of nearly all impervious parking lot area. The storm drainage system of catch basins, manholes, and connected pipe network covers the drainage basin well. Overland flow is limited to small areas around the catch basins. The calculations for time of concentration assume a short overland flow path (60 feet), no shallow flow, and a longer channelized flow path (275 feet). The time of concentration was calculated using the methodology listed in the SCS Technical Release 55, *Urban Hydrology for Small Watersheds* (Publication 210-VI-TR-55, Second Ed., June 1986). A curve number of 98 was assumed for all impervious areas. Assumptions and applicable equations are shown in the time of concentration output tables in Appendix B. The time of concentration for drainage basin 6057 is calculated to be 5.0 minutes.

7.2.4 Estimated Peak Flows and Volumes

Peak flow rates for drainage basin 6057 were calculated using the SCS Hydrograph Method based on the Type 1A hyetograph and the 24-hour design storm depths, as published in the City of Seattle's *Stormwater Treatment Technical Requirements Manual* (November 2000). The 1.33 acre drainage basin includes 0.12 acres of pervious landscape areas (curbed islands and strip). For hydrology calculations, the 1.21 acres of impervious (paved parking) and pervious surface areas were used to estimate peak flows and volumes. Peak flows and volumes are estimated as follows:

6-month, 24-hour storm =	0.30 cfs;	3,800 cubic feet
2-year, 24-your storm =	0.51 cfs;	6,500 cubic feet
25-year, 24-hour storm =	1.02 cfs;	13,200 cubic feet
100-year, 24-your storm =	1.27 cfs;	16,500 cubic feet

Supporting calculations and assumptions are included in Appendix B.

7.3 QUALIFYING STORM EVENT

Stormwater samples will be collected and reported based on water year. The water year is defined as October 1st through September 30th of each year. Table 9 includes storm event criteria that will be used to determine qualifying storm events for the collection of composite samples for chemical analysis and toxicity testing (per Permit §S8.D.2 a,d).

Table 9. Qualifying storm event criteria.

Criteria	Wet Season	Dry Season
Seasonal Period	October 1 through April 30	May 1 through September 30
Minimum Amount of Rainfall	0.20" min. no fixed max.	0.20" min. no fixed max.
Rainfall Duration	No fixed min. or max.	No fixed min. or max.
Antecedent Precipitation Conditions	Less than or equal to 0.02" rain in previous 24-hours No rain in previous 6 hours	Less than or equal to 0.02" rain in previous 72-hour No rain in previous 6 hours (See Note 1 for seasonal first-flush antecedent period)
Inter-event Dry Period(2)	6 hours	6 hours

(1) The seasonal first-flush storm event is an event in August or September, with at least a one-week antecedent dry period. This one-week antecedent dry period is defined as less than or equal to 0.02" of rain in the previous 168 hours, ***or*** no recorded measurable ***storm*** flow at the outfall during the 168 hours (flow must be monitored continuously for the entire 168-hour period). If toxicity testing cannot be completed in August or September then a storm can be sampled in October for toxicity testing, irrespective of antecedent dry period (per Permit §S8.D.2.d).

(2) A storm event can be considered completed once there has been a 6-hour period with no precipitation, however water sampling can continue until there has been a 12-hour period with no precipitation at which time the storm would be considered complete.

7.4 PRECIPITATION MONITORING

Precipitation will be continuously monitored with a tipping bucket rain gage to be located on the roof of the Shilshole Bay Marina office building, which is situated 500 feet north of drainage basin 6057. A continuous rainfall record will allow the establishment of a rainfall/runoff relationship at the stormwater monitoring site, and the determination and tracking of the number of qualifying storm events throughout the year. Additionally, the rain gage data will allow the validation of the storm event composite samples based on the criteria presented in Section 7.3.

Field staff will need near real-time rain data to alert them to when antecedent conditions have been met (to start sampling) and to determine when the rainfall event has ended (to

retrieve samples). To reduce staff effort required to repeatedly go to the rain gage site and download data, the rain gage will be equipped with telemetry (e.g., hard-line telephone, cellular, radio, or facility wiring) to allow for remote data acquisition via dialing into a modem and/or access via the internet.

The rain gage will be maintained per manufacturer's recommendations (see Section 8.1 for methods). The rain gage will be capable of measuring only liquid precipitation (i.e., rainfall or melted snow); it will not be a heated rain gage capable of melting snow. Alternate nearby rain gage data will be used should the Stormwater Monitoring Program rain gage malfunction (see Section 8.5).

7.5 FLOW MONITORING

Flow rate at the monitoring site will be continuously monitored and recorded for the duration of the current permit term. Flow rate will be determined using a DataGator flow meter installed in the outlet pipe from structure 5482. The DataGator flow meter is a modified Venturi tube (Flow Tube) which is inserted into the drainage pipe, so that all flows pass through the Flow Tube. Three pressure sensors within the Flow Tube measure water level, from which an electronics package calculates flow rate. The DataGator accurately measures flow rate under the wide range of flow conditions that are expected to occur at the site, ranging from shallow open-channel free flow to full-pipe flow.

Flow data will be downloaded during pre-storm setup, after the end of a sampled storm event, and periodically between targeted events to minimize data gaps.

7.6 STORMWATER SAMPLE COLLECTION

Two types of stormwater samples will be collected at the monitoring site: (1) manual grab samples, and (2) flow-weighted composite samples[1]. Sixty-seven percent of forecasted qualifying storm events that result in actual qualifying storms throughout the water year will be sampled, with up to a maximum of 11 sampled qualifying storm events per year. Samples will be collected according to the approximate distribution indicated in Table 10 (per Permit §S8.D.2.a).

[1] For the first-flush toxicity composite sample, a time-paced sample may be used. Refer to Section 7.6.3.

Table 10. Approximate yearly distribution of stormwater outfall samples

	Approximate number of samples(1)
Wet Season (October 1 through April 30)	60% to 80 % (a maximum between 7 and 9)
Dry Season (May 1 through September 30)	20% to 40% (a maximum between 2 and 4)

(1) "Sample" = one flow-weighted composite sample and one grab sample.

Additionally, samples will be analyzed from up to three storm events that do not meet the qualifying criteria (per Permit §S8.D.2.a).

7.6.1 Grab Sampling

Manual grab sampling is required for samples undergoing analysis for fecal coliform and total petroleum hydrocarbons (TPH) (per Permit §S8.D.2.e). Grab samples will be collected by manually filling appropriated sample containers directly from the structure 5482 outlet.

Grab samples will be collected as early in a storm event as possible. Attempts will be made to collect the grab samples during the same storm event as the composite sample. However, storm events may start in the middle of the night, on weekends, or during holidays (when automatic samplers can automatically start sampling) when it may be difficult to have field staff available. During such times, the grab samples may be taken during different storm events.

Table 11 indicates the estimated sample volume required for each parameter to be analyzed for in grab samples.

Table 11. Stormwater grab sample analytes and required volumes.

Parameter/Specific Analyte	Required Sample Volume (mL)
Bacteria	
Fecal Coliform	125 – 375
TPH	
NWTPH-Dx	1000 – 4000
NWTPHH-Gx	80 – 320

(1) Minimum sample volumes correspond to method-specific bottle requirements for parameters obtained by grab samples. Maximum values correspond to sample volumes needed for analysis of field and laboratory QC samples.

Attempts will be made to collect the grab sample at the start of a storm events that meet the qualifying storm event criteria, as discussed in Section 7.3; however, the grab sample will be collected prior to the confirmation that the storm has met the qualifying rainfall depth. If the grab sample is collected during storm runoff that meets all qualifying storm event criteria (Section 7.3), except for the minimum amount of rainfall, the grab sample will be analyzed and considered a valid sample[2]. Attempts will be made to have fecal coliform and TPH analyzed in the same grab sample. However, if the 48-hour maximum holding time for fecal coliform cannot be met (e.g., due to the laboratory being closed on a weekend or holiday), a grab sample could be taken for fecal coliform either later in the storm event, or during a future storm event. See Section 8.2.3 for the procedures to collect grab samples.

7.6.2 Composite Sampling

Flow-weighted composite samples will be collected at the monitoring site during qualifying storm events as defined in Section 7.3. The autosampler will be configured to begin sampling at the onset of runoff. Sample flow-weighting will be based on equal subsample volumes collected at various time increments. The time increments are determined by the time it takes for a set volume of water to flow past the sampling point.

For storm events lasting less than 24 hours, samples will be collected for at least seventy-five percent of the storm event hydrograph[3]. For storm events lasting longer than 24 hours, samples will be collected for at least seventy-five percent of the hydrograph for the first 24 hours of the storm (per Permit §S8.D.2.b). Each composite sample will consist of at least ten (10) aliquots. Composite samples with seven (7) to nine (9) aliquots are acceptable if they meet the other sampling criteria (per Permit §S8.D.2.b).

[2] This is based on the following reasoning: water quality represented by the grab sample will not be affected by environmental conditions occurring after the time that the grab sample is taken. For example, a grab sample is taken during initial runoff from 0.05 inches of precipitation. This grab sample will be the same whether 0.00 inches of rain falls afterwards (a non-qualifying event), or if 0.15 inches of rain falls afterwards (a qualifying event).

[3] These percentage requirements are based on the percent of total hydrograph volume. In other words, not based on time or number of attempted aliquots.

7.6.2.1. Composite Sample Analytical Parameters and Volume Needs

Flow-weighted composite samples will be analyzed for the following parameters (per Permit §S8.D.2.b.i-vii):

- BOD_5
- Hardness
- TSS
- Turbidity
- Conductivity
- Chloride[4]
- Orthophosphate
- Total phosphorus
- Nitrate/nitrite
- Total Kjeldahl nitrogen
- Phthalates
- Polycyclic aromatic hydrocarbons (PAHs)
- Methylene Blue Activating Substances (MBAS)
- Metals (total and dissolved zinc, copper, cadmium, lead, and mercury).
- Pesticides including: 2,4-D, MCPP, Triclopyr, Diazinon, Malathion, Chlorpyrifos, Dichlobenil, Prometon and Pentachlorophenol

The specific laboratory analyses and analytical limits for each of these parameters are presented in Section 9.3.1. If the volume of stormwater sample collected from a qualifying storm is insufficient to allow for analysis of all parameters listed above, samples will be analyzed for as many parameters as possible in the following priority order (in descending order of priority) (per Permit §S8.D.2.c):

(1) TSS
(2) Conductivity
(3) MBAS
(4) Metals
(5) Hardness
(6) PAHs
(7) Phthalates
(6) Pesticides
(9) Nutrients
(10) BOD_5
(11) Chlorides

[4] Although required by the permit, monitoring chloride in the Port's stormwater that discharges directly to marine waters will not provide useful information with respect to potential effects on the receiving water quality.

If insufficient volume exists to run the next highest priority pollutant, that analysis will be bypassed and analyses run on lower priority pollutants in accordance with the remaining priority order to the extent possible (per Permit §S8.D.2.c).

Table 12 indicates the estimated sample volume required for each parameter/analyte for the composite sample. A total composite sample volume of at least 8.2 L is needed and up to 14.0 L is recommended to run the required analyses. When field and lab QC samples are targeted (see Section 10.0), a composite sample volume of at least 23.8 L is needed and up to 53.0 L is recommended.

Table 12. Analytical parameters and required sample volumes for routine stormwater composite samples

Parameter/Specific Analyte	Required Sample Volume (mL)	
	Min.	Recomm.
Conventionals		
TSS	200	1000
Turbidity	100	500
Conductivity	100	500
Chloride	25	500
BOD_5	1000	1000
Hardness	50	500
MBAS	1000	1000
Nutrients		
Total phosphorus	125	500
Orthophosphate	25	500
TKN	125	500
Nitrate-nitrite	25	500
Metals		
Total recoverable (Cu, Zn, Pb, Cd, Hg)	200	1000
Dissolved (Cu, Zn, Pb, Cd, Hg)	200	1000
Organics		
PAHs	1000	1000
Phthalates	1000	1000
Herbicides (2,4-D, MCPP, Triclopyr, Dichlobenil, Pentachlorophenol)	1000	1000
Pesticides, Nitrogen (Prometon)	1000	1000
Pesticides, Organo-P (Diazinon, Malathion, Chlorpyrifos)	1000	1000
Total Volume Needed for Routine Composite Sample:	8.2 L	14.0 L
Total Composite Sample Volume Needed for Field & Lab QC:	23.8 L	53.0 L

7.6.2.2. Sample Collection Materials

For many of the chemical analyses, it is appropriate to collect samples in either plastic or glass containers; however, for the analyses of organic constituents samples must be collected in glass containers. Therefore, all composite water samples will be collected into glass containers equipped with Teflon-lined lids to avoid interferences that could result from using plastic containers for organic parameters. Additionally, auto-sampler suction tubing will be lined with Teflon and apparatuses used to split samples to undergo analysis for organic chemicals will be constructed from Teflon. The exposed surfaces of sampling apparatuses or housings will not contain any of the metals included in the parameter list.

7.6.2.3. Sample Container Preparation

Some chemical analysis methods call for special preparation of the sample container. For metals analysis, containers must be first rinsed with nitric acid, then with deionized water. For analysis of organic chemicals, containers must be rinsed with an organic solvent or baked. Special preparation needed for one constituent can cause interferences when analyzing for another constituent (e.g., the nitric acid rinse required for metals analysis could interfere with analysis of the sample for nitrogen). To address these issues, multiple glass sample containers that would undergo different preparations should be used to collect replicate water samples of sufficient volume to conduct the required chemical analyses and toxicity testing as described in Section 7.6.2.1 and Section 7.6.3.1.

7.6.2.4. Composite Sample Collection Method

Composite stormwater samples will be collected using commercially available automatic water samplers manufactured for this purpose (e.g. Teledyne-Isco 6700 series samplers, Hach-Sigma 900 series samplers). For this project, these autosampler models could be deployed in an off-the-shelf configuration equipped with four, 1-gallon (3.79 liter) glass bottles, or alternatively, the sampler could be customized to use up to twelve, 1-gallon glass bottles. This custom configuration would better ensure sufficient sample volumes are collected for the required analyses, including toxicity and QC samples, and provide flexibility in targeting a range of rainfall depths, with the intent to minimize the amount of field staff time to frequently check the status of sampling (i.e., bottle capacity remaining during a storm event).

In either the off-the-shelf, or the custom configuration, the autosampler will be programmed to collect paired sequential samples over the course of the storm. This sequential program would allow the possibility of selecting a subset of filled bottles

(depending upon total sample volume needed for the targeted event) which represent the targeted hydrograph area and exclusion of a sample bottle largely filled with baseflow at the end of an event. The bottle pairs would consist of a bottle that underwent preparation for metals analysis and a bottle that underwent preparation for organics analyses as described in Section 7.6.2.3. Upon completion of a sampling event, the contents of each bottle type will be combined to produce two composite samples, one to undergo analyses for metals and conventional parameters and the other to undergo analyses for organics and nutrients. A diagram of the sampler setup for a custom twelve-bottle configuration is shown in Figure 7. See Section 7.8 for further details.

Sampling will be initiated in one of two ways. Sampling may be initiated by the auto level enable function, based on an increase in level as measured by the flow meter. Alternatively, the automatic sampler may be manually started based on field staff observation of rainfall and a corresponding increase in runoff flow. The auto enable will be based on the current baseflow level plus a level change beyond the sensitivity (i.e., noise) of the instrument. This level change value is typically 0.03 to 0.1 feet.

The objective of the composite sampling is to sample representative storm runoff. Thus, efforts will be made to exclude sampling during baseflow occurring after the end of a storm event. Intra-event baseflow (i.e., when flow rate falls to the baseflow level between short gaps within one storm event hydrograph) may be sampled if sufficient volume passes to accumulate the pacing volume.

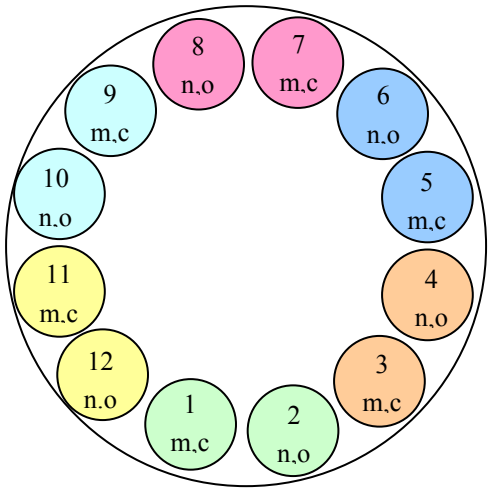

Legend

1: bottle number

m,c: bottles receiving nitric acid rinse; contents to be analyzed for metals, and conventionals

n,o: bottles to receive organic solvent rinse; contents to be analyzed for nutrients and organics

Same colored bottles represent bottle pairs that are filled simultaneously. Bottle pairs are filled sequentially over the course of the storm, resulting in a total of six bottle pairs if all bottles are filled.

Sample Compositing Scheme

(1) The contents from all "m,c" bottles are combined to create a single composite sample for analyses of conventions and metals.

(2) The contents of all "n,o" bottles are combined to create a single composite sample for analysis of conventional metals analysis.

Figure 7. Diagram of autosampler 12-bottle configuration for routine flow-weighted composite sampling.

7.6.3 First Flush Toxicity Sampling

A composite sample will be collected for the seasonal first-flush toxicity and wet-chemistry testing. This sample will be collected during August or September with antecedent conditions, as stated in Section 7.3. If a sample is unattainable during this time (due to lack of adequate rain, unavailability of gametes/eggs, sampler malfunction, etc.), the sample will be attempted a second time. A second sample would also be collected if the first test is invalid or anomalous. Further information regarding invalid or anomalous tests can be found in Section 9.3.2. A second attempt may occur later than September 30. After this date, no antecedent dry period is required prior to sample collection (per Permit §S8.D.2.d).

7.6.3.1. Toxicity Sample Analytical Parameters and Volume Needs

The following parameters will be analyzed in the stormwater sample collected for the toxicity testing (per Permit §S8.D.2.d.i):

- TSS
- Chloride
- Hardness
- MBAS
- Metals including total and dissolved copper, zinc, cadmium, lead, and mercury
- PAHs
- Phthalates
- Pesticides including: 2,4-D, MCPP, Triclopyr, Diazinon, Malathion, Chlorpyrifos, Dichlobenil, Prometon and Pentachlorophenol

Table 13 lists the chemical parameters and required volumes for the toxicity sample. Unlike the standard flow-weighted composite samples and grab samples, BOD_5, fecal coliform, TPH, turbidity, nutrients, and conductivity are not required for analysis of the toxicity sample. Conductivity, pH, and hardness will be measured at the toxicity laboratory upon sample receipt. Additionally, MBAS will be analyzed within 24-hours to determine analyte presence that can cause interference with the 7-day toxicity test. Table 14 lists the required sample volume for toxicity testing. A total composite sample volume of at least 30.7 L is needed and up to 54.0 L is recommended to run the required chemical analyses and toxicity testing.

Table 13. Chemical parameters and required volumes for the seasonal first-flush toxicity sample

Parameter/Specific Analyte	Required Sample Volume (mL)	
	Min.	Recomm.
Conventionals		
TSS	200	1000
Chloride	25	500
Hardness	50	500
MBAS	1000	1000
Metals		
Total recoverable (Cu, Zn, Pb, Cd, Hg)	200	1000
Dissolved (Cu, Zn, Pb, Cd, Hg)	200	1000
Organics		
PAHs	1000	1000
Phthalates	1000	1000
Herbicides (2,4-D, MCPP, Triclopyr, Dichlobenil, Pentachlorophenol)	1000	1000
Pesticides, Nitrogen (Prometon)	1000	1000
Pesticides, Organo-P (Diazinon, Malathion, Chlorpyrifos)	1000	1000
Total Volume Needed for Chemical Analyses:	6.7 L	10.0 L

Table 14. Required sample volume for toxicity testing.

Parameter/Specific Analyte	Required Sample Volume (L)	
	Min.	Preferred
Toxicity		
Environmental Canada Trout Embryo Viability	24.0	44.0

(1) The preferred sample volume includes the extra volume needed to perform additional replicates of 100 percent sample in order to provide tissue for yolk/embryo analysis, if needed (see Section 9.3.2).

If sufficient sample volume cannot be collected during the seasonal first-flush event, alternatives have been established for conducting the toxicity test with reduced volumes, as described in Section 9.2.3.1.

7.6.3.2. Toxicity Sample Collection Method

The composite sample will be collected using the same autosampler configuration as described in Section 7.6.2 and then split into a subsample for the toxicity testing and a subsample for the chemistry analyses. Sample compositing and splitting procedures are described in Section 9.2. However, instead of collecting a flow-weighted composite sample (as for the routine outfall composite samples), a time-paced composite sample will be collected for the toxicity sample.

Since the autosamplers have limited bottle capacity volume, it is more difficult to achieve the larger sample volume needed for the toxicity sample if flow-weighting the composite collection. Utilizing a time-paced sample approach will increase the success rate in targeting this infrequent storm event. This approach also allows scheduling of staff to switch out bottles and conduct sample processing/icing and other related activities. To collect sufficient volume, sample bottles will need to be "swapped out" at least once during the storm event, as described in Section 8.2.4.

Flow-weight composite sampling for toxicity testing may be attempted if a stable and precise precipitation/ runoff yield relationship can be derived so that a determination of the appropriate sampler flow pacing rate for the targeted storm event can be made with a high level of confidence. Flow-weighted composite sampling for toxicity testing would be conducted using the same approach as for routine composite samples, as described in Section 7.6.2.4.

7.6.4 Baseflow Sampling

Samples of wet-season and dry-season baseflow (if they are present) will be collected from the monitoring site. Water quality data from the baseflow samples will be used in calculating wet season, dry season, and annual pollutant loads (per Permit §S8.D.2.g), as described in Section 13.3.3. Each year, two baseflow samples will be collected in the wet season and one baseflow sample will be collected during the dry season. The antecedent precipitation conditions presented in Table 9 will define baseflow conditions (i.e., the absence of storm flow) at the monitoring site for the purpose of baseflow sample collection. Baseflow samples will be collected with the same manual grab sampling techniques used for storm event grab sampling. Baseflow samples will be analyzed for the same parameters as the routine stormwater samples (both grab and composite stormwater samples) listed in Table 11 and Table 12.

7.7 SEDIMENT SAMPLING

Annual sediment monitoring will be conducted for this project. Sediment samples will be collected at the outfall location using an in-line sediment trap or similar collection system. If the required sediment amount is unattainable from this device, other collection methods may be employed with prior approval by Ecology.

The annual sediment sample collected will be analyzed for the following parameters:

- Total solids (% solids)
- Total organic carbon
- Grain size
- Metals including: total zinc, copper, cadmium, lead, and mercury
- Polycyclic aromatic hydrocarbons (PAHs)
- Phthalates
- Phenolics
- PCBs
- Pesticides including: Pentachlorophenol, Diazinon, Malathion, and Chlorpyrifos

See Section 9.3.1 for analytical methods and reporting limits.

If the amount of sediment sample collected on an annual basis is insufficient to allow analysis for all parameters listed above, samples will be analyzed for as many parameters as possible in the following priority order (in descending order of priority):

(1) Grain size
(2) Total org. carbon
(3) Metals
(4) PAHs & Phthalates
(5) Phenolics
(6) PCBs
(7) Pesticides

If insufficient sediment amounts exist to run the next highest priority pollutant, that analysis will be bypassed and analyses run on lower priority pollutants in accordance with the remaining priority order to the extent possible. Grain size analysis will be performed if enough sample is available for all parameters using the grain size method specified in Section 9.3.1, otherwise grain size will be characterized qualitatively[5].

Table 15 indicates the estimated sample amounts required for each parameter/analyte for the annual sediment. A total sample of at least 220 g of sediments is needed and up to 1,426 g is recommended to run the required chemical and physical analyses.

[5] Per *Settlement Agreement to Resolve Monitoring Issues Raised on Appeal by the Phase I Permittees Under Special Condition S8 of the 2007 Phase I Municipal Stormwater Permit- Attach. A – S8 Settlement*

Table 15. Analytical parameters and required sample amounts for annual sediments

Parameter/Specific Analyte	Required Sample Volume (g)	
	Min.	Recomm.
Conventionals		
Total solids	10	75
Total organic carbon	5	75
Grain size	25	300
Metals		
Total recoverable (Cu, Zn, Pb, Cd, Hg)	10	75
Organics		
PAHs	20	150
Phthalates / Phenolics	90	300
PCBs	20	150
Herbicides (Pentachlorophenol)	20	150
Pesticides, Organo-P (Diazinon, Malathion, Chlorpyrifos)	20	150
Total Volume Needed for Annual Sediment Sample:	220 g	1425 g

(1) Required sample volumes expressed on a wet-weight basis.

(2) Minimum sample listed for grain size assumes sample consists primarily of fine-grained sediments.

7.8 MONITORING EQUIPMENT INSTALLATION AND SETUP

This section describes the type of monitoring equipment that will be deployed and the general configuration of equipment installation, including the rain gage, flow meter, autosampler and sediment sampler.

7.8.1 Precipitation Monitoring

For this project a Hydrological Services Model TB3 or similar tipping bucket rain gage will be installed on the roof of the Shilshole Bay Marina office building. This instrument measures rainfall at 0.01-inch increments. A data logger connected to the rain gage will record rainfall data at 5-minute intervals. Remote access to the data logger will be provided via a cellular phone, hard-wire phone, or spread-spectrum radio communication package. Data from the rain gage data logger will also download automatically to a second data logger at the stormwater monitoring site via a spread-spectrum radio connection. The rain gage system will be powered by the building's electrical system.

7.8.2 Stormwater Monitoring

Flow monitoring and water sampling equipment will be installed at manhole 5482. A diagram of the monitoring site equipment layout is provided in Figure 8. Flow monitoring equipment components will consists of a DataGator Flow Tube and the associated electronics enclosure. Water sampling equipment will include an autosampler head (e.g. Teledyne-Isco 6700 series samplers, Hach-Sigma 900 series samplers) fitted either to a

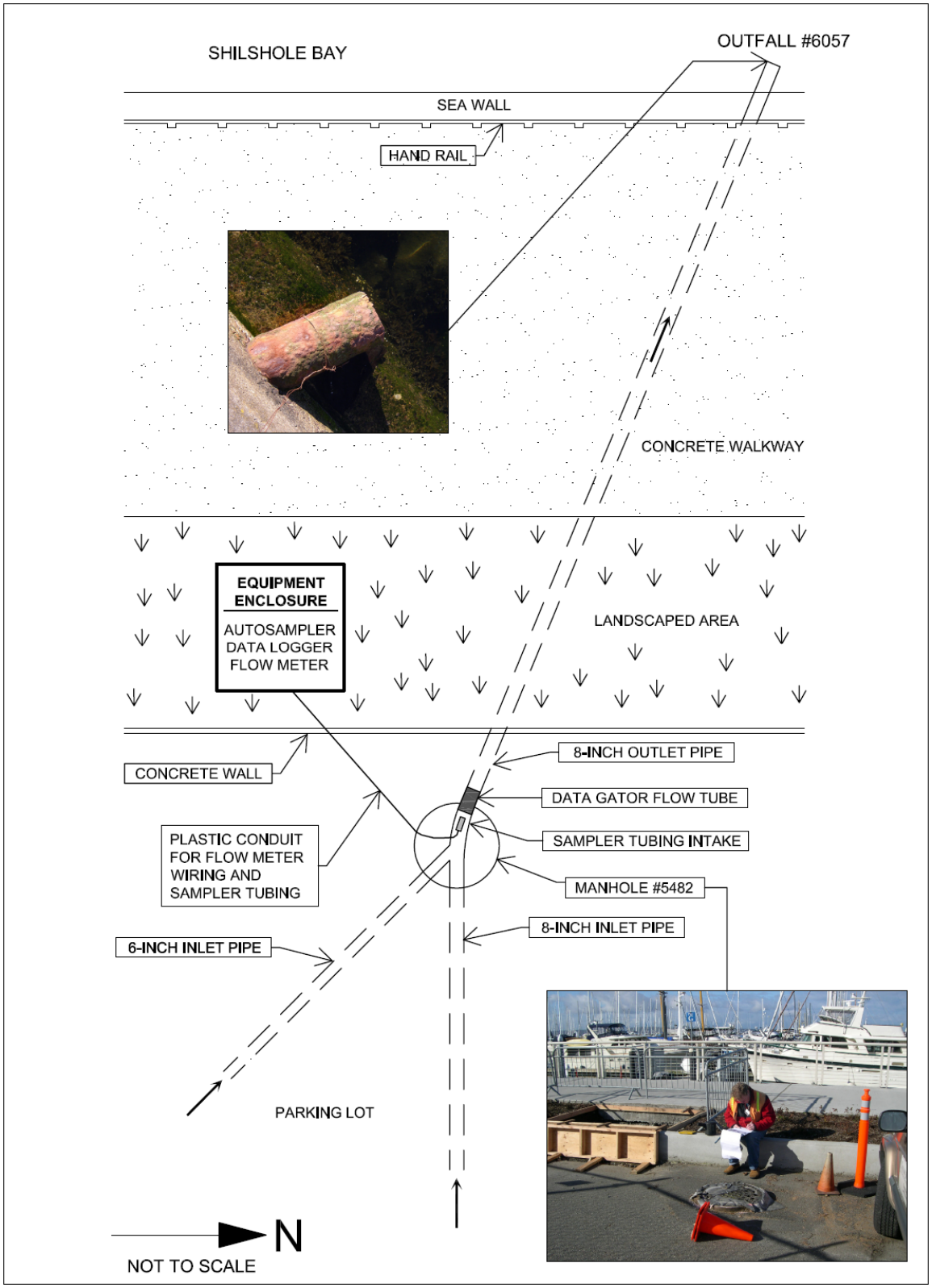

Figure 8. Diagram of monitoring site equipment layout.

standard sampler body or custom sampler body that holds up to twelve 1-gallon bottles, the sampler suction line and sampler strainer. A Campbell Scientific Inc., (CSI) datalogger (CR800 or CR1000) will record flow, precipitation and sampler data, and control communications between the flow meter and autosampler.

An above-ground enclosure will house the DataGator electronics enclosure, the CSI datalogger, and the autosampler. The equipment enclosure will be located in a landscaping area adjacent to manhole 5482. All equipment will be powered by the marina's AC electrical system, while a 12-volt deep cycle battery will provide backup power.

A number of monitoring system components will be installed underground, inside manhole 5482. The electrical cable for the DataGator and the sampler suction line will run from the equipment enclosure into manhole 5482 through a buried plastic conduit. Inside manhole 5482, the DataGator Flow Tube will be installed in the manhole structure outlet pipe. A gasket or inflatable tube is used to seat the Flow Tube inside the pipe, thus directing all water through the Flow Tube. From the plastic conduit, the sampler suction line will run along the wall of the manhole structure to avoid damage from debris traveling down the pipe, and will terminate at the sampler strainer which will be installed at the entrance to the Flow Tube. The strainer will be positioned slightly above the outlet pipe invert to avoid sampling bed-load that may move down the pipe.

As discussed previously, the end of the outfall pipe is frequently submerged at higher tides. A check valve will be installed at the end of the outfall pipe, which will allow stormwater to flow from the pipe but will keep seawater from entering the pipe and reaching the monitoring equipment.

While onsite, field personnel will interface with the CSI datalogger, autosampler and DataGator electronics package using a laptop computer equipped with necessary software. The Port may also choose to install a telemetry communication system that would provide for remote communication with the CSI data logger. The telemetry system would allow for downloading data to offsite computers and remote programming and control of the monitoring instruments.

7.8.3 Monitoring Equipment Preparation and Testing

Prior to initial deployment, the autosampler head and body will be washed with Liqui-nox® and rinsed with tap water. The sampler pump tubing, suction line, and strainer will

be washed with Liqui-nox®, rinsed with reagent grade water, flushed with methanol, then rinsed again with reagent grade water. The ends of the pump tubing and suction line tubing will be capped using Parafilm until deployed.

During equipment installation, the sampler and the flow meter will be programmed and tested. If flow is not available for a test run, a test run may be scheduled later to ensure the equipment is working properly. During sampler programming, field staff will be trained (if needed) to calibrate and program the equipment.

7.8.4 Sediment Sampling Apparatus

Suspended particulate samples will be collected with the use of an in-line stormwater sediment trap, with a deployment period not to exceed one year. Construction details and performance of sediment traps is described in Stormwater Sediment Trap Pilot Study (Wilson and Norton, 1996). A diagram of the construction details of the sediment traps used by Wilson and Norton are presented in Figure 9. These sediment traps consist of a glass vessel housed in a stainless steel cup that is held in place by brackets. The sediment traps are typically installed in large-diameter pipes or in the sumps of storm drain junction structures, such a catch basins. Neither of these types of deployment configurations are available at the monitoring site. Instead, the sediment trap will be deployed at the outfall within a T-coupling fitted to end of the pipe, as depicted in Figure 10. The branch of the coupling will be oriented vertically, pointing downward. The sediment trap will be positioned within the branch, supported by a cap at the end of the coupling. The top of the sediment trap will protrude into the through-flow section of the coupling, operating in a manner similar to deployment in a catch-basin sump. As stormwater flows across the opening of the sediment trap, particulate material will settle into the trap; however, bed-load would not be captured. As discussed in Section 7.2.2, the outfall pipe is periodically submerged during high tides. A check valve will be attached to the end of the pipe, after the coupling, to prevent seawater from entering the sediment trap area during high tides.

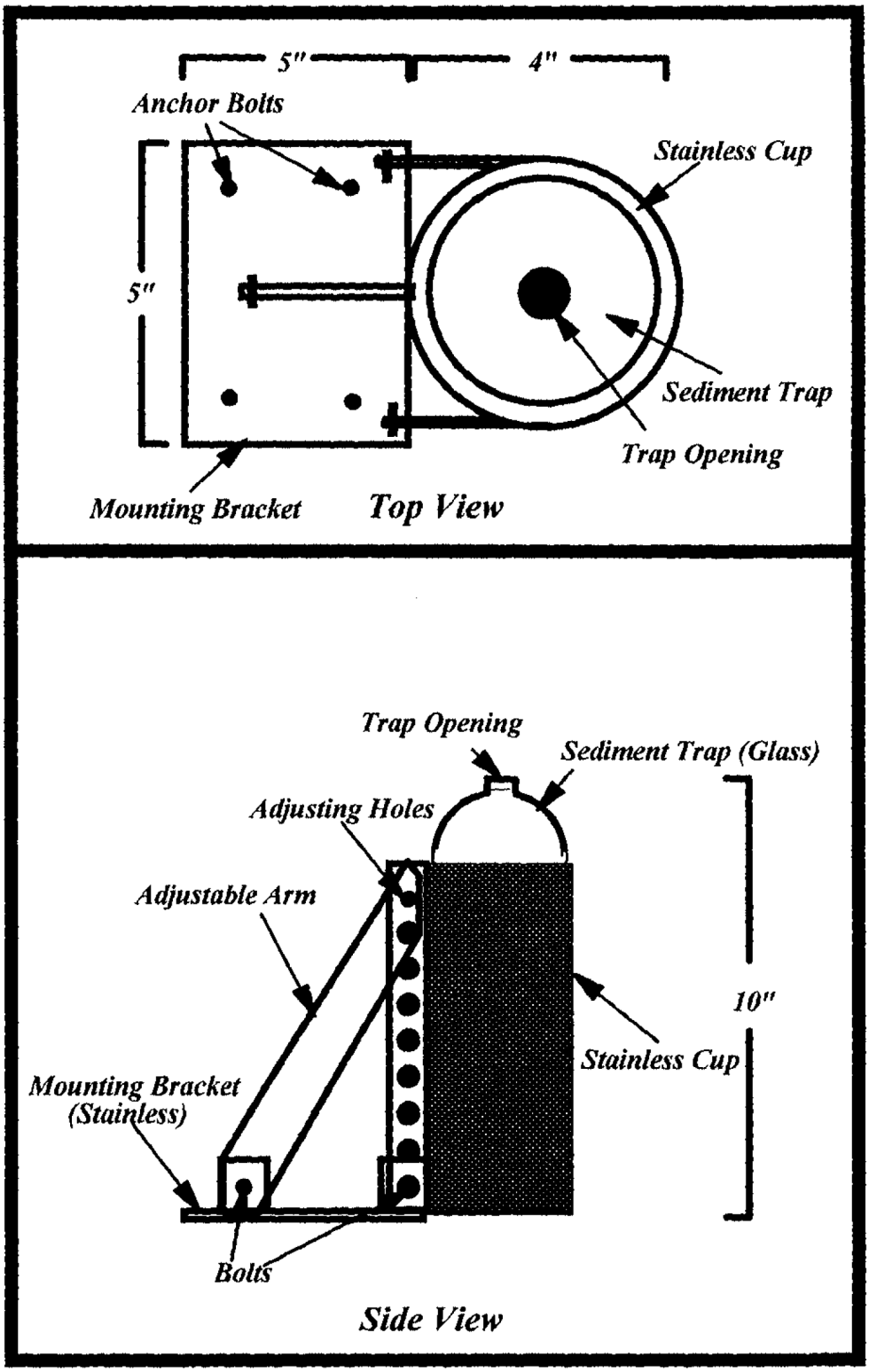

Figure 9. Construction details of typical stormwater sediment trap.

(Adapted from Norton, 1998)

This Page Intentionally Left Blank.

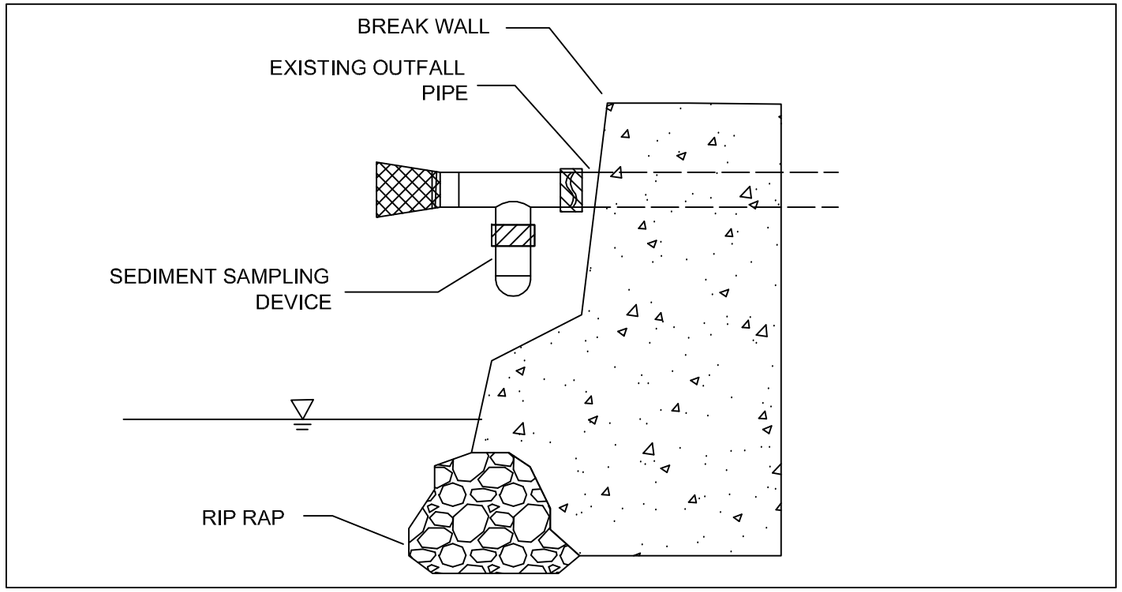

SITE VIEW

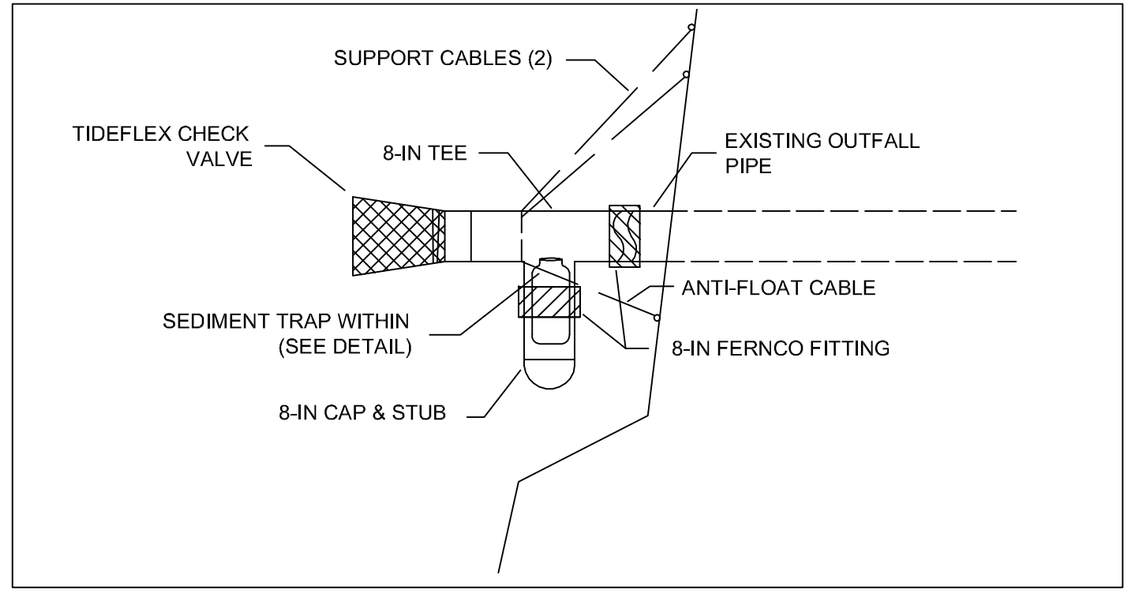

SEDIMENT TRAP HOUSING DETAIL

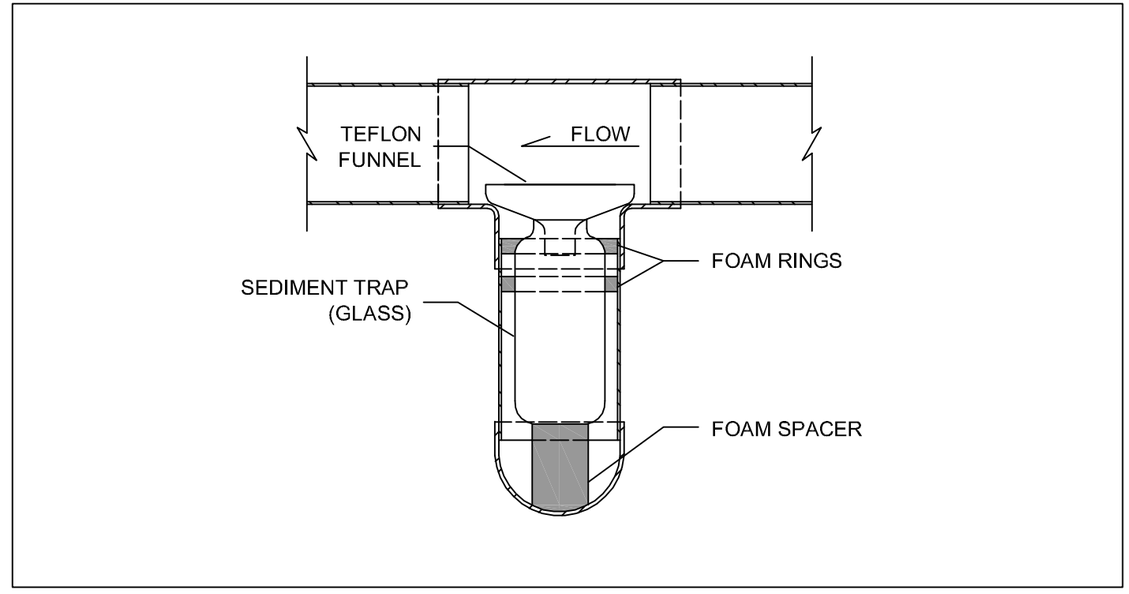

SEDIMENT TRAP DETAIL

TAYLOR ASSOCIATES, INC.

END OF PIPE SEDIMENT TRAP CONCEPTUAL DESIGN

Port of Seattle

Seattle, Washington

DATE: February 2008	PROJECT NO. 070075
DESIGNED BY: Taylor	
DRAWN BY: OTAK	FIGURE NO. 10
REVISED BY: SCC	

Q:\Seaport\2008-02 Stormwater\Sediment_Trap_Aspect.dwg

This Page Intentionally Left Blank.

8.0 SAMPLING PROCEDURES

The following sections document activities associated with field instrument operation and maintenance and sample collection. Further detail on the field procedures that will be implemented to ensure quality control for sample collection and handling are provided in Section 10.1.

8.1 PRECIPITATION AND FLOW MONITORING

The rain gage will be downloaded at least twice each month and immediately prior to, during, and following sampled storm events. Field staff will inspect the rain gage monthly and service as needed. Rain gage calibration will occur using the method and at the frequency recommended.

The flow meter will be inspected and serviced at least twice each month and immediately prior to storm events targeted for sampling. Flow data will be downloaded during these maintenance visits, as well as during and following sampled storm events.

8.2 STORMWATER SAMPLE COLLECTION

This section documents the procedures to prepare for and conduct stormwater sample collection for both routine sampling and sampling for toxicity testing.

8.2.1 Procedures for Storm Targeting

At least once each week during periods when storms are to be targeted for sampling, the Consultant Technical Lead or designee will check precipitation forecasts for Seattle (for example, NWS – http://www.wrh.noaa.gov/sew/ or 180-hour GFS meteogram – http://www.wxmaps.org/) to determine if a storm meeting the minimum storm depth targeting criteria (Section 7.3) might occur during the next 7-day period. If forecasts suggest that a storm meeting the target criteria might occur, the Consultant Technical Lead or designee, and the Consultant Project Manager will confer to decide if the storm should be considered for targeting. If the decision is made to keep tracking the storm, then the Consultant Technical Lead or designee will continue reviewing forecasts once each day and update the other team members as to the status of the forecast. Seventy-two hours prior to the onset of the candidate storm, the Consultant Technical Lead or designee will review precipitation forecasts and, in consultation with the Consultant Project Manager, make a final “go-no go” decision to target the storm for sampling. If targeting a storm for “first-flush toxicity sampling”, the Consultant Technical Lead or

designee will contact the Toxicity Laboratory to confirm gamete/egg availability prior to making the final go/no go decision. If the decision is made to target the storm, the Consultant Technical Lead or Consultant Project Manager will designate a "Storm Controller" for the targeted storm event. From that point until all samples related to the storm are delivered to the laboratories, the Storm Controller will be responsible for managing all field activities and sampling decisions related to the targeted storm event. The initial act of the Storm Controller will be to schedule a field team to conduct the pre-storm site setup activities, described in the next section.

During storm targeting periods, Internet-based forecasts will be archived to document targeting decisions.

8.2.2 Pre-storm Site Setup

Within 24 hours prior to the onset of the targeted event, a field team will visit the monitoring site to prepare the monitoring equipment for sampling. Prior to this site visit, the Storm Controller will determine a sampler pacing rate based on the forecasted precipitation quantity, the expected duration of the storm, and expected resulting runoff volume (yield). Prior to deployment, autosampler bottles will have been cleaned by the analytical laboratory, as described in Section 7.6.2.3. Bottles will be stored in plastic bags prior to placement into the sampler. The field team will not be deployed unless the antecedent precipitation criteria have been met or in the professional judgment of the Storm Controller are likely to be met (see Table 9).

During the pre-storm site visit, the field team will check/modify the autosampler and flow meter programs, conduct necessary maintenance and calibration activities, place sample bottles into the autosampler, and start the autosampler program. All setup, maintenance and calibration activities will be recorded on a field data sheet Appendix C along with notes of other relevant site conditions. During pre-storm setup, the following specific tasks will be performed:

(1) Inspect Flow Tube and remove debris that may be present;
(2) Install new sampler pump tubing if needed and calibrate autosampler sample volume (confined space entry into the manhole might be required for this activity);
(3) Back flush the sampler pump tubing and suction line with one gallon of reagent-grade water;
(4) Inspect sampler strainer and water level sensor for debris and clean if necessary (confined space entry into the manhole might be required for this activity);
(5) Prepare sampler, including removing bottle lids and filling the sampler base with ice;

(6) Confirm sampler and flow meter programs and configuration settings;
(7) Run sampler diagnostics to confirm operation of sampler distributor arm; and
(8) Start sampler program and confirm the sampler program is active and is disabled (awaiting a trigger signal from the flow meter to initiate sample collection).

8.2.3 Storm Event Grab Sample Collection

As the targeted storm event approaches, the Storm Controller will monitor the project rain gage to confirm that antecedent conditions are met and to determine the start of the storm. During this period, the Storm Controller will be in contact with the field team members to keep them apprised of the status of the impending storm. Once the targeted storm begins (i.e. antecedent conditions are met followed by 0.01-inch of rain recorded at the project rain gage), the field team will be mobilized to conduct grab sampling. The field team will strive to collect the grab sample within one hour of the onset of storm runoff. The field team will conduct the following tasks at the site:

(1) Check auto sampler status and replenish ice in base as needed. If problems are discovered, troubleshoot the issue and recover the sampling effort if possible;
(2) Check autosampler battery voltage and replace battery if necessary;
(3) Download the flow meter and review the flow record for obvious errors;
(4) Collect grab samples by dipping individual containers into flow stream of the stormwater conveyance. Samples will be skimmed from the surface for total petroleum hydrocarbons if the flow stream is not well mixed/turbulent.
(5) Collect duplicate grab samples, if scheduled, as per task 4;
(6) Collect grab sample blank, if scheduled, as per Section 10.1.2.2; and
(7) Label and store samples on ice for transport to processing area or laboratory.

All activities and pertinent observations will be recorded on the same field data sheet used to document pre-storm setup activities.

8.2.4 Mid-Event Site Visits

Over the course of the targeted storm event, the Storm Controller will track cumulative precipitation and make a judgment of whether or not the sampler bottles are likely to fill up before the storm ends. To make this judgment, the Storm Controller will consider the expected runoff yield from the cumulative rainfall, the sampler pacing rate, and the amount of precipitation forecasted for the remainder of the storm event. If the Storm Controller decides it is likely that the composite sampler bottles may fill prematurely, then the Storm Controller will dispatch a field team to check the status of the sampler,

and if necessary, swap in new sample bottles. During the mid-event site visit, the field crew activities will include:

(1) Check the autosampler status. Determine if the sample bottles should be swapped-out in consultation with the Storm Controller via cell phone, if necessary. If the decision is made to swap out the bottles, the field crew will:
   a. Review sampler report and record data;
   b. Cap and label sample containers and store on ice for transport to the sample processing location where they will be stored for later compositing;
   c. Deploy new bottles into the sampler; and
   d. Restart the sample program.

(2) Replenish the ice in the sampler;

(3) Check autosampler battery voltage and replace battery if necessary; and

(4) Download the flow meter and review the flow record for obvious errors.

All activities and pertinent observations will be recorded on the same field data sheet used during previous visits for the particular storm event.

Multiple mid-event site visits may occur during a targeted storm event if necessary to avoid gaps in or truncation of the composite sampling period.

8.2.5 Composite Sample Retrieval

Over the course of the targeted storm, the Storm Controller will monitor near term forecasts and weather conditions to determine when the storm event has ended. Once the storm event has ended, a field team will be mobilized to retrieve the composite sample. Field teams will conduct the following tasks to retrieve the composite sample and demobilize the site after the sampling event is over:

(1) Review sampler report and record data;

(2) Cap and label sample containers and store on ice for transport to the sample processing location;

(3) Collect equipment rinsate blank, if scheduled;

(4) Download the flow meter and review the flow record for obvious errors; and

(5) Power-down the autosampler or place in “stand-by” mode.

All activities and pertinent observations will be recorded on the same field data sheet used to document pre-storm setup and grab sampling activities.

8.2.6 Field Sample Validation

Prior to processing the samples and transferring custody to the analytical and toxicology laboratories, the Storm Controller will validate the samples against the criteria presented in Section 7.0. Validation activities for the grab samples and composite samples are presented below.

Grab Sample

- Confirm that required antecedent precipitation conditions existed prior to grab sample collection (Table 9);
- Review field forms and the storm hydrograph to ensure the grab sample was collected early in the storm event;
- Review field notes to determine whether anomalous condition were encountered that would disqualify the grab sample; and
- Inspect the grab sample containers to ensure they are properly filled.

Composite Sample

- Determine if the sampled storm was a qualifying event (Table 9). A routine composite sample can still be processed as one of the three targeted samples from a "non-qualifying" event if the antecedent precipitation criterion was met, and the precipitation was more than 0.09" but less than 0.20";
- Review field notes to determine whether anomalous condition were encountered that would disqualify the composite sample (e.g., missed aliquots or sample bottles overfilled);
- Confirm that the composite sample consists of at least ten (10) aliquots. Composite samples with seven (7) to nine (9) aliquots are acceptable if they meet the other sampling criteria (per Permit §S8.D.2.b);
- Check that sufficient sample volume has been collected to complete laboratory analyses; and
- Review the storm hydrograph and timing of sample aliquot collection to ensure that the composite sample period included at least seventy-five percent of the hydrograph during the first 24 hours of the storm.

8.2.7 Periodic Preventative Maintenance

Periodic preventative maintenance of equipment will occur periodically between storm events to ensure equipment is operating properly. Signs of vandalism, rusting equipment, equipment failure, or other maintenance issues will be documented in field notebooks or

on field data forms. Approximately every six-months a new sampler suction line will be installed at the monitoring site and the sampler head will be brought into the laboratory for a thorough cleaning. Once every year, the DataGator water level sensors will be "re-zero'd" in the field following the manufacturer's specified procedures.

8.3 BASEFLOW SAMPLE COLLECTION

Field staff will collect baseflow samples during pre-storm setup sites visits, as described above in Section 8.2.2, for up to three events per year. In addition to the other activities conducted during a pre-storm site visit, the field team will conduct the following task at the site:

(1) Confirm the presence of baseflow. If baseflow is present then;
(2) Collect grab samples by dipping individual containers into flow stream of the stormwater conveyance. Samples will be skimmed from the surface for total petroleum hydrocarbons if the flow stream is not well mixed/turbulent; and
(3) Label and store samples on ice for transport to processing area or laboratory.

All activities and pertinent observations will be recorded on the same field data sheet used to document other pre-storm setup activities.

8.4 SEDIMENT SAMPLE COLLECTION

Suspended particulate samples will be collected with the use of an in-line sediment trap. See Section 7.8.4 for further details related to the design, construction, and installation of sediment traps.

The sediment trap will be continuously deployed for up to one year during each annual monitoring period. A glass bottles will comprise the sediment trap unless debris causes damage or breakage, at which time a Teflon bottle will be deployed for the remainder of the study.

Field personnel will deploy the sediment trap at the end of the outfall pipe at the location described in Section 7.2. Field personnel will take care to deploy the trap consistently at the outfall location to avoid introducing sampling bias due to the physical positioning of the sediment trap.

Crews will periodically inspect the sediment collection bottle over the deployment period to: (1) ensure that the funnel and container opening is free of litter and other debris that could limit sample collection; (2) ensure the glass collection bottle is not damaged or

broken; and (3) note the volume of material that has collected in the trap. Inspection site visits will occur monthly at the beginning of each planned deployment period; however, the frequency of subsequent inspections may be adjusted depending on how quickly the trap is filling.

At the end of the planned deployment period, or when a sediment trap is full or nearly full, the collection bottle will be removed from the housing, capped with a screw closure, packaged, and placed in a cooler on ice for transport to the contract analytical laboratory for further processing. Under no circumstance will sediment samples be frozen prior to being processed, as this may change the particle size distribution prior to analysis. Processing will begin within 24 hours of retrieval.

See Section 9.2.2 for further information on sediment sample processing; sample amounts, containers, preservation, and analytical hold times; and sample labeling and chain-of-custody procedures.

8.5 NON-DIRECT MEASUREMENTS

In the event that the project rain gage malfunctions, precipitation data from a nearby City of Seattle rain gage will be obtained to fill in data gaps in the precipitation record. This rain gage (#45-6008) is located at the Ballard Locks, about one mile SSE from the project site. The rain gage is operated and maintained by Seattle Public Utilities (SPU). Raw (non-QC'd) precipitation data from this rain gage can be obtained on the internet using a user name and password provided by SPU. Data is recorded at one-minute intervals and uploaded to the internet three times per day. Precipitation data that has been QC'd can also be obtained from SPU.

9.0 MEASUREMENT PROCEDURES

This section presents the analytical and toxicological laboratories selected for this project; describes sample processing procedures that will be used for routine composite, toxicity, and sediment samples; and describes chemical and toxicity testing procedures used for the analysis of samples collected during this project.

9.1 LABORATORY SELECTION

The laboratories selected for this program will have the demonstrated ability to achieve acceptable detection/reporting limits for the constituents of interest using standard analytical methods, meet project-specific criteria, and be accredited by the Washington State Department of Ecology. The laboratories that have been selected for the physical and chemical analysis of water and sediments and toxicological testing are discussed below.

9.1.1 Chemical Analysis Laboratory

Analytical Resources, Inc. (ARI) is currently certified to perform environmental analysis of soil and water by the Washington State Department of Ecology through the Environmental Laboratory Accreditation Program (ELAP). A complete list of parameters that ARI is accredited to perform can be found at http://www.ecy.wa.gov/apps/eap/acclabs/lab.asp?id=1235.

ARI is located at the following address:
4611 S. 134th Place
Tukwila, WA 98168-3240
(206) 695-6205

9.1.2 Toxicological Laboratory

Nautilus Environmental, LLC is currently certified to perform a wide-range of bioassay tests (including freshwater chronic toxicity tests) by the Washington State Department of Ecology. A complete list of parameters that Nautilus Environmental is accredited to perform can be found at http://www.ecy.wa.gov/apps/eap/acclabs/lab.asp?id=1294.

Nautilus Environmental is located at the following address:
5009 Pacific Highway East, STE 2

Fife, WA 98424
(253) 922-5814

9.2 POST STORM EVENT SAMPLE PROCESSING

This section presents the post-storm event sample processing procedures for routine composite and toxicity samples; annual sediment processing procedures; required sample amounts, containers, preservation, and holding times for chemical and toxicity testing procedures; and sample label and chain-of-custody procedures for processed samples.

9.2.1 Routine Composite and Toxicity Samples

At the end of a successful sampling event, composite sample containers (and grab sample bottles) will be transported by the field team crew to the contract analytical laboratory following established sample handling and chain-of-custody procedures. Upon arrival at the analytical laboratory, composite samples will be moved to a designated clean room within the laboratory for further processing.

Post-storm event sampling processing for routine composite samples will consist of first preparing a final composite sample from the available sample container volumes, then splitting the composited sample into representative subsamples by dispensing sample into the appropriate number and type of pre-cleaned laboratory sample containers for subsequent analysis. Sample processing will be performed using available and accepted devices, and may include the use of churn sample splitters, cone sample splitters, or other available devices or techniques.

Field team crew and/or laboratory staff will follow established SOPs for post-storm event sample handling and processing. All sample processing equipment will be decontaminated prior to use following established procedures. Samples will be properly labeled and formally transferred to the laboratory for analysis following established chain-of-custody procedures, as discussed below.

Required sample amounts, containers, preservatives, and analytical holding times for required chemical analyses are included in Table 16 and Table 17. Analytical methods and method reporting limits for routine chemical analyses are shown in Table 20. In the event that additional analyses are to be performed, such as targeted collection of field and laboratory matrix QC samples, or the laboratory requests additional sample amounts for select parameters, the sample size will be increased as needed. In such cases, sample

processing procedures will be adjusted accordingly to accommodate larger initial sample volumes, as discussed below.

Post-storm event sample processing for toxicity will follow similar procedures as for routine stormwater samples with the exception that the chemical and toxicity sample volume requirements will require the processing of a larger initial sample volume. Sample processing procedures will be modified to accommodate larger sample volumes and may include the use multiple sample processing devices in combination (e.g., cone sample splitter in series with duplicate churn sample splitters) or other similar techniques. Toxicity samples, once processed, will need to be transported to the toxicity testing laboratory as soon as practicable in order to meet the 36 hour hold time requirement. Efforts will be made during sample processing and transport to ensure that toxicity sample temperature requirements are met. Toxicity sample hold time and temperature considerations are discussed below.

Following are toxicity testing temperature and analytical holding time considerations.

Temperature Considerations

Toxicity samples should be cooled to 0–6 °C during collection and sent to the laboratory immediately upon completion. If the sample temperature exceeds 6 °C at receipt by the toxicity testing laboratory, then the WET Coordinator, Randall Marshall (rmar461@ecy.wa.gov or 360-407-6445) will be contacted in accordance with Department of Ecology Publication No. WQ-R-95-80, *Laboratory Guidance and Whole Effluent Toxicity Test Review Criteria* to get acceptance for the sample temperature deviation. Acceptance will not be given for samples warmer than 14 °C unless the sample is received by the laboratory within one hour after collection. Samples should meet the required temperature stated in the reference listed above.

Analytical Holding Time Considerations

If the maximum holding time of the toxicity sample is exceeded (36 hours), toxicity laboratory staff will contact Ecology's WET Coordinator for conditional acceptance. Sample holding times in excess of 72 hours will not be accepted by the laboratory or Ecology. The date and time of test initiation will be recorded on field data forms or in field notebooks.

9.2.2 Annual Sediment Sample

Sediment collection bottles retrieved at the end of deployment periods will be transported to the contract analytical laboratory following established sample handling procedures, as discussed in Section 8.4. Upon receipt at the contract analytical laboratory, the sediment samples will be moved to a designated clean room within the laboratory where the samples will be further processed. All processing will occur with 24 hours of retrieval.

Processing will consist of first decanting off a portion of the overlying water, then centrifuging the remaining slurry to isolate the particulate fraction. After initial sample processing, the contents of each sample bottle will be weighed and the volume measured to estimate sediment amounts (wet-weight and volume basis) collected from the site. Next, samples will be well mixed and transferred to pre-cleaned containers. If replicate samples are collected from the site (e.g., more than one sediment trap or other sampling techniques employed), sediments will be composited into a single sample. After processing, samples will be chilled and maintained at 4 °C until analysis. Excess sample collected will be stored for potential repeat analyses.

Manipulations of the samples during processing will be accomplished using stainless-steel utensils. All sample processing utensils will be decontaminated prior to use following established procedures. All sample containers will be glass jars with Teflon-lined closures, cleaned to EPA QA/QC specifications (US EPA, 1990). Required sample amounts, containers, preservatives, and analytical holding times for required analyses are included in Table 19. Analytical methods and method reporting limits for analysis of sediments are shown in Table 21.

9.2.3 Sample Amounts, Containers, Preservation, and Holding Times

Samples processed in the laboratory will include those from routine stormwater composites, first-flush stormwater composite for chemical analysis and toxicity testing, and sediments. Typical sample amounts, containers, preservation, and analytical holding times are summarized in Table 16 through Table 19 for each sample type to be collected during this project. A brief discussion is provided below for each consideration.

In general, the minimum sample amounts are the minimum sample sizes for a single analysis based on the contract analytical laboratory. In some cases, allowances have been made in the minimum sample amounts to account for potential repeat analyses or bottle damage, particularly for the required organic parameters. See discussion below on guidelines for toxicity samples of insufficient volume.

Subsamples obtained from the sample splitter device or from composited sediment samples will be collected into contaminant-free containers according to analytical method specifications. The contract analytical laboratory will provide all appropriate sample containers required for this project.

Certain analytes require chemical preservation in order to minimize potential chemical changes or degradation that could occur in a sample prior to analysis. Samples prepared in the laboratory will be preserved following method-specific requirements for both preservation and storage. No chemical preservatives are required for toxicity or sediment samples collected for this project.

Technical holding times are the maximum length of time allowed between when a sample is collected to when the digestion, extraction, and/or analysis is initiated to ensure analytical accuracy and representativeness. All samples collected from the field will be transported to the laboratory and processed as soon as practicable.

Table 16. Typical sample amounts, containers, preservatives, recommended handling, and holding times for routine stormwater composite samples

Parameter	Minimum Amount	Container Type	Handling / Preservation	Holding Time
Conventional Parameters				
Total suspended solids	200 mL	HDPE	Cool to ≤ 6°C	7 days
Turbidity	100 mL	HDPE	Cool to ≤ 6°C	48 hours
Conductivity	100 mL	HDPE	Cool to ≤ 6°C	28 days
Chloride	25 mL	HDPE	Cool to ≤ 6°C	28 days
BOD_5	1000 mL	HDPE	Cool to ≤ 6°C	48 hours
Hardness (as $CaCO_3$)	50 mL	HDPE	Cool to ≤ 6°C, HNO_3	6 months
Methylene Blue Activating Substances (MBAS)	1000 mL	HDPE	Cool to ≤ 6°C	7 days
Bacteria				
Fecal Coliform	125 mL	Corning Glass	Cool to ≤ 6°C, $Na_2S_2O_3$	24 hours
Nutrients				
Total phosphorus	125 mL	HDPE	Cool to ≤ 6°C, H_2SO_4	28 days
Orthophosphate	25 mL	HDPE	Cool to ≤ 6°C	48 hours
Total Kjeldahl nitrogen	125 mL	HDPE	Cool to ≤ 6°C, H_2SO_4	28 days
Nitrate-nitrite	25 mL	HDPE	Cool to ≤ 6°C, H_2SO_4	28 days

Parameter	Minimum Amount	Container Type	Handling / Preservation	Holding Time
Metals				
Total recoverable (copper, zinc, lead, cadmium)	100 mL	HDPE	Cool to ≤ 6°C, HNO_3	6 months
Total dissolved (copper, zinc, lead, cadmium)	100 mL	HDPE	Cool to ≤ 6°C, Filter, HNO_3	6 months
Total mercury	100 mL	HDPE	Cool to ≤ 6°C, HNO_3	28 days
Dissolved mercury	100 mL	HDPE	Cool to ≤ 6°C, Filter, HNO_3	28 days
Organics				
PAHs	2 – 500 mL	Amber Glass	Cool to ≤ 6°C	7 days
Phthalates	2 – 500 mL	Amber Glass	Cool to ≤ 6°C	7 days
Herbicides (2,4-D, MCPP, Triclopyr, Dichlobenil, Pentachlorophenol)	2 – 500 mL	Amber Glass	Cool to ≤ 6°C	7 days
Pesticides, Nitrogen (Prometon)	2 – 500 mL	Amber Glass	Cool to ≤ 6°C	7 days
Pesticides, Organo-P (Diazinon, Malathion, Chlorpyrifos)	2 – 500 mL	Amber Glass	Cool to ≤ 6°C	7 days
TPH				
NWTPH-Dx	2 – 500 mL	Amber Glass	Cool to ≤ 6°C	7 days
NWTPH-Gx	2 – 40 mL	VOC Vial	Cool to ≤ 6°C, HCl	14 days

Table 17. Typical sample amounts, containers, preservatives, recommended handling, and holding times for first-flush stormwater composite chemical analysis

Parameter	Minimum Amount	Container Type	Handling / Preservation	Holding Time
Conventional Parameters(1)				
Total suspended solids	200 mL	HDPE	Cool to ≤ 6°C	7 days
Chloride	25 mL	HDPE	Cool to ≤ 6°C	28 days
Hardness (as $CaCO_3$)	50 mL	HDPE	Cool to ≤ 6°C, HNO_3	6 months
Methylene Blue Activating Substances (MBAS)	1000 mL	HDPE	Cool to ≤ 6°C	7 days
Metals				
Total recoverable (copper, zinc, lead, cadmium)	100 mL	HDPE	Cool to ≤ 6°C, HNO_3	6 months
Total dissolved (copper, zinc, lead, cadmium)	100 mL	HDPE	Cool to ≤ 6°C, Filter, HNO_3	6 months
Total mercury	100 mL	HDPE	Cool to ≤ 6°C, HNO_3	28 days
Dissolved mercury	100 mL	HDPE	Cool to ≤ 6°C, Filter, HNO_3	28 days

Parameter	Minimum Amount	Container Type	Handling / Preservation	Holding Time
Organics				
PAHs	2 – 500 mL	Amber Glass	Cool to ≤ 6°C	7 days
Phthalates	2 – 500 mL	Amber Glass	Cool to ≤ 6°C	7 days
Herbicides (2,4-D, MCPP, Triclopyr, Dichlobenil, Pentachlorophenol)	2 – 500 mL	Amber Glass	Cool to ≤ 6°C	7 days
Pesticides, Nitrogen (Prometon)	2 – 500 mL	Amber Glass	Cool to ≤ 6°C	7 days
Pesticides, Organo-P (Diazinon, Malathion, Chlorpyrifos)	2 – 500 mL	Amber Glass	Cool to ≤ 6°C	7 days

(1) Conductivity, pH, and hardness will be measured at the toxicity laboratory upon sample receipt. The hardness sample referenced above is the optional hardness sample collected from the receiving water in order for the laboratory to adjust the sample hardness to match receiving water. Additionally, MBAS should be analyzed within 24-hours to determine analyte presence that can cause interferences with 7-day toxicity test.

Table 18. Recommended sample amount, container type, preservative, handling, and holding time for first-flush stormwater composite toxicity testing

Parameter	Recommended Amount	Container Type	Handling / Preservation	Holding Time
Toxicity				
Environmental Canada Trout Embryo Viability	24 – 44 L (6.4 – 11.6 gal.)	Glass	Cool to ≤ 6°C, no preservation	36 hours

(1) Information in this table provided by Nautilus Laboratory, LLC.

(2) Laboratory method based on Environment Canada Biological Test Method: Toxicity Tests using Early Life Stages of Salmonid Species (Rainbow Trout), EPS 1/RM/28, 2nd Edition, July 1998 (with modifications by Canaria, et al., 1998).

Table 19. Typical sample amounts, containers, preservatives, recommended handling, and holding times for sediments

Parameter	Minimum Amount	Container Type	Handling / Preservation	Holding Time
Conventional Parameters				
Total solids	10 g, wet	Glass, WM	Cool to ≤ 6°C, no preservation	14 days
Total organic carbon	5 g, wet	Glass, WM	Cool to ≤ 6°C, no preservation	14 days
Grain Size	25 g, wet	Glass, WM	Cool to ≤ 6°C, no preservation	6 months

Parameter	Minimum Amount	Container Type	Handling / Preservation	Holding Time
Metals				
Total recoverable (copper, zinc, lead, cadmium, mercury)	10 g, wet	Glass, WM	Cool to ≤ 6°C, no preservation	6 months
Organics				
PAHs	20 g, wet	Glass, WM	Cool to ≤ 6°C, no preservation	14 days
Phthalates / Phenolics	90 g, wet	Glass, WM	Cool to ≤ 6°C, no preservation	14 days
PCBs	20 g, wet	Glass, WM	Cool to ≤ 6°C, no preservation	14 days
Herbicides (Pentachlorophenol)	20 g, wet	Glass, WM	Cool to ≤ 6°C, no preservation	14 days
Pesticides, Organo-P (Diazinon, Malathion, Chlorpyrifos)	20 g, wet	Glass, WM	Cool to ≤ 6°C, no preservation	14 days

(1) Minimum sample listed for grain size assumes sample consists primarily of fine-grained sediments.

9.2.3.1. Toxicity Sample Volumes and Sample of Insufficient Volume

A sufficient sample for toxicity consists of the following:

- Approximately 6.7 (minimum) to 10 L (recommended) (1.8 to 2.7 gal) for the required chemical analyses (see Table 17), and
- Approximately 44 L (11.6 gal) for required toxicity testing and exposure of extra eggs for embryo/yolk testing, if needed.

If the total sample volume after the qualifying storm is less than 44 L (11.6 gal), but greater than 24 L (6.3 gal), then the volume that was collected will determine changes in the toxicity testing configuration in accordance with the following:

- 38 L (10 gal) of sample – base the concentration series on a 0.3 dilution factor.
- 33 L (8.7 gal) of sample – base the concentration series on a 0.3 dilution factor and reduce the number of replicates to three.
- 30 L (7.9 gal) – reduce the number of extra replicates of 100% sample for yolk/embryo analysis from seven to three and the number of replicates in the test itself to three.
- 26 L (6.9 gal) – reduce the number of extra replicates of 100% sample for yolk/embryo analysis from seven to three and base the concentration series on a 0.3 dilution factor.
- 24 L (6.3 gal) – reduce the number of extra replicates of 100% sample for yolk/embryo analysis from seven to three, base the concentration series on a 0.3 dilution factor, and reduce the number of replicates in the test itself to three.

If the sample volume falls between the values listed above, then the test configuration must match the next lowest volume and the excess sample used for additional replicates of 100% sample to improve the detection limit for the yolk/embryo analysis. If sample volume is less than 24 L (6.3 gal), toxicity sample analysis will not be conducted.

9.2.4 Sample Labels and Chain of Custody

Samples prepared in the laboratory will be labeled for future identification. Sample labels will be prepared for each parameter-specific sample container. The laboratory(s) will provide labels for all sample containers and labels will be filled out using waterproof ink, placed on the sample containers, and covered with clear plastic shipping tape. At a minimum, each sample label will contain the following information:

- Project name and number,
- Station identification,
- Date and time of sample collection (24-hour clock using Pacific Standard Time),
- Total number of sample bottles for each analysis and the number of each container (e.g., 1/4, 2/4, etc.),
- Sample/QC identification code,
- Analyses to be conducted, and
- Initials of field team.

Chain-of-custody (COC) procedures will be strictly followed to provide an accurate written record of the possession of each sample from the time it is collected in the field through laboratory analysis. The laboratory(s) will provide sufficient copies of blank COC forms. Example COC forms are included in Appendix C. All sample information (i.e., sample date/time, sample matrix, number of containers, etc.), including all required analyses, will be logged onto a COC form after sample processing in the laboratory, and prior to formal transfer of sample containers to the laboratory(s). Any time possession of the samples is transferred, the individual(s) relinquishing and receiving the samples will respectively sign, date, and note the time of transfer on the COC form. This record documents the transfer of custody of samples from the samplers to the laboratory(s).

The person responsible for transfer/transport of the samples to the laboratory(s) will complete and sign the COC form. After the COC form has been completed, the sampler(s) will retain a copy for future reference, and the COC form will be place in a clear zip loc bag and placed in the cooler. Coolers will be sealed with custody tape prior to transfer/transport and the custody seal will be signed and dated by the person

transferring/transporting the samples, secured across the lid and body of the cooler, and covered with clear shipping tape.

Upon receipt of the samples, the laboratory(s) will assume responsibility for maintaining sample chain of custody, and will follow all applicable internal procedures for sample log-in, storage and holding times, tracking, and control.

9.3 CHEMICAL ANALYSIS AND TOXICITY TESTING PROCEDURES

This section presents the chemical analysis and toxicity testing procedures that will be used for the analysis of stormwater, sediments, and toxicity samples collected during this project.

9.3.1 Chemical Analysis Water and Sediment

This section presents the procedures that will be used for the physical and chemical analysis of stormwater and sediments, including analytical methods and reporting limits.

9.3.1.1. Analytical Instruments

Analytical instruments used by the laboratory will be maintained and calibrated according to the internal laboratory Quality Assurance Plan (QAP), all applicable standard operating procedures (SOPs), the instrument manufacturer's specifications, and any specific method requirements.

9.3.1.2. Analytical Methods and Reporting Limits

The target constituents for this project and corresponding analytical methods, method detection limits, method reporting limits, and reporting limit targets for stormwater and sediments are presented in Table 20 and Table 21.

All analyses will be conducted according to the project QAPP, the contract laboratory's QAP, and any specific analytical SOPs. A listing of analytical SOPs used by the contract analytical laboratory is included in Appendix D.

Table 20. Target constituents, analytical methods, laboratory method detection and reporting limits, and reporting limit targets for stormwater

Parameter	Laboratory Method	Method Detection Limit	Method Reporting Limit	Reporting Limit Target
Conventional Parameters				
Total suspended solids	SM 2540D	NA	1.0 mg/L	1.0 mg/L
Turbidity	EPA 180.1	NA	0.05 NTU	± 0.2 NTU
Conductivity	EPA 120.1	0.24 µmho/cm	1.0 µmho/cm	± 1 µmho/cm
Chloride	EPA 300.0	0.05	0.1 mg/L	0.2 mg/L
BOD_5	EPA 405.1	NA	2.0 mg/L	2.0 mg/L
Hardness (as $CaCO_3$)	EPA 200.7	NA	0.33 mg/L	1.0 mg/L
Methylene Blue Activating Substances (MBAS)	SM 5540C	0.023 mg/L	0.025 mg/L	0.025 mg/L
Bacteria				
Fecal Coliform	SM 9222D	NA	1 CFU/100 mL	2 min., 2E6 max.
Nutrients				
Total phosphorus	SM 4500-P E	0.001 mg/L	0.016 mg/L	0.01 mg/L
Orthophosphate	SM 4500-P E	0.001 mg/L	0.004 mg/L	0.01 mg/L
Total Kjeldahl nitrogen	SM 4500-Norg D	0.19 mg/L	0.60 mg/L	0.5 mg/L
Nitrate-nitrite	SM 4500-NO_3 I	0.003 mg/L	0.01 mg/L	0.01 mg/L
Metals				
Total recoverable copper	EPA 200.8	0.004 µg/L	0.1 µg/L	0.1 µg/L
Dissolved copper	EPA 200.8	0.004 µg/L	0.1 µg/L	0.1 µg/L
Total recoverable zinc	EPA 200.8	0.0046 µg/L	1.0 µg/L	5.0 µg/L
Dissolved zinc	EPA 200.8	0.0046 µg/L	1.0 µg/L	1.0 µg/L
Total recoverable lead	EPA 200.8	0.0017 µg/L	0.02 µg/L	0.1 µg/L
Dissolved lead	EPA 200.8	0.0017 µg/L	0.02 µg/L	0.02 µg/L
Total recoverable cadmium	EPA 200.8	0.004 µg/L	0.02 µg/L	0.2 µg/L
Dissolved cadmium	EPA 200.8	0.004 µg/L	0.02 µg/L	0.02 µg/L
Total mercury	EPA 7470A	0.001 µg/L	0.02 µg/L	0.1 µg/L
Dissolved mercury	EPA 7470A	0.001 µg/L	0.02 µg/L	0.1 µg/L
Organics				
PAHs	EPA 8270D SIM			0.1 µg/L
Naphthalene		0.0444 µg/L	0.1 µg/L	
2-Methylnaphthalene		0.0319 µg/L	0.1 µg/L	
Acenaphthylene		0.0412 µg/L	0.1 µg/L	
Acenaphthene		0.042 µg/L	0.1 µg/L	
Dibenzofuran		0.0387 µg/L	0.1 µg/L	
Fluorene		0.0393 µg/L	0.1 µg/L	
Phenanthrene		0.040 µg/L	0.1 µg/L	
Anthracene		0.0487 µg/L	0.1 µg/L	

Parameter	Laboratory Method	Method Detection Limit	Method Reporting Limit	Reporting Limit Target
Fluoranthene		0.0261 µg/L	0.1 µg/L	
Pyrene		0.0353 µg/L	0.1 µg/L	
Benzo(a)anthracene		0.0564 µg/L	0.1 µg/L	
Chrysene		0.0313 µg/L	0.1 µg/L	
Benzo(b)fluoranthene		0.0682 µg/L	0.1 µg/L	
Benzo(k)fluoranthene		0.0768 µg/L	0.1 µg/L	
Benzo(a)pyrene		0.0699 µg/L	0.1 µg/L	
Indeno(1,2,3-cd)pyrene		0.0321 µg/L	0.1 µg/L	
Dibenz(a,h)anthracene		0.0555 µg/L	0.1 µg/L	
Benzo(a,h,i)perylene		0.0352 µg/L	0.1 µg/L	
1-Methylnaphthalene		0.0407 µg/L	0.1 µg/L	
Pentachlorophenol		0.129 µg/L	0.5 µg/L	
Phthalates	EPA 8270D			1.0 µg/L
Dimethyl phthalate		0.232 µg/L	1.0 µg/L	
Diethyl phthalate		0.37 µg/L	1.0 µg/L	
Di-n-butyl phthalate		0.275 µg/L	1.0 µg/L	
Butyl benzyl phthalate		0.356 µg/L	1.0 µg/L	
Bis(2-ethylhexyl) phthalate		0.451 µg/L	1.0 µg/L	
Di-n-octyl phthalate		0.218 µg/L	1.0 µg/L	
Herbicides	EPA 8151			0.01 – 1.0 µg/L
2,4-D		0.079 µg/L	1.0 µg/L	
MCPP		17.84 µg/L	50 µg/L	
Triclopyr		0.05 µg/L	0.1 µg/L	
Dichlobenil		0.05 µg/L	0.1 µg/L	
Pentachlorophenol		0.071 µg/L	0.25 µg/L	
Pesticides, Nitrogen	EPA 8270D SIM			0.01 – 1.0 µg/L
Prometon		0.05 µg/L	0.1 µg/L	
Pesticides, Organo-P	EPA 8270D			0.01 – 1.0 µg/L
Diazinon		0.00169 µg/L	0.04 µg/L	
Malathion		0.00587 µg/L	0.20 µg/L	
Chlorpyrifos		0.00303 µg/L	0.04 µg/L	
TPH				
NWTPH-Dx	NWTPH-Dx	0.051 mg/L	0.50 mg/L	0.25 – 0.50 mg/L
NWTPH-Gx	NWTHP-Gx	0.070 mg/L	0.25 mg/L	0.25 mg/L

(1) Laboratory methods, method detection limits, and method reporting limits (PQLs) based on information provided by Analytical Resources, Inc. (January 2008) and is subject to revision.

(2) Reporting limit targets based on information listed in Appendix 9 of the Phase I Municipal Stormwater Permit and in the additional guidance *Alternative Laboratory Methods Approved by Ecology for Use under the Phase I Municipal Stormwater Permit* (Ecology, 2008).

Table 21. Target constituents, analytical methods, laboratory method detection and reporting limits, and reporting limit targets for sediments

Parameter	Laboratory Method	Method Detection Limit	Method Reporting Limit	Reporting Limit Target
Conventional Parameters				
Total solids	SM 2540B	NA	0.01%	NA
Total organic carbon	PSEP (1997)	0.004%	0.02%	0.10%
Grain Size	PSEP (1997)	NA	0.01%	NA
Metals				
Total recoverable copper	EPA 200.8	0.0003 mg/Kg	0.01 mg/Kg	0.1 mg/Kg
Total recoverable zinc	EPA 200.8	0.005 mg/Kg	0.05 mg/Kg	5.0 mg/Kg
Total recoverable lead	EPA 200.8	0.005 mg/Kg	0.02 mg/Kg	0.1 mg/Kg
Total recoverable cadmium	EPA 200.8	0.005 mg/Kg	0.02 mg/Kg	0.1 mg/Kg
Total mercury	EPA 7471A	0.005 mg/Kg	0.05 mg/Kg	0.1 mg/Kg
Organics				
PAHs	EPA 8270D SIM			70 µg/Kg dry
Naphthalene		2.74 µg/Kg	6.7 µg/Kg	
2-Methylnaphthalene		3.34 µg/Kg	6.7 µg/Kg	
Acenaphthylene		2.47 µg/Kg	6.7 µg/Kg	
Acenaphthene		4.29 µg/Kg	6.7 µg/Kg	
Dibenzofuran		3.65 µg/Kg	6.7 µg/Kg	
Fluorene		3.58 µg/Kg	6.7 µg/Kg	
Phenanthrene		4.47 µg/Kg	6.7 µg/Kg	
Anthracene		3.25 µg/Kg	6.7 µg/Kg	
Fluoranthene		3.40 µg/Kg	6.7 µg/Kg	
Pyrene		3.46 µg/Kg	6.7 µg/Kg	
Benzo(a)anthracene		6.18 µg/Kg	6.7 µg/Kg	
Chrysene		2.74 µg/Kg	6.7 µg/Kg	
Benzo(b)fluoranthene		6.02 µg/Kg	6.7 µg/Kg	
Benzo(k)fluoranthene		5.88 µg/Kg	6.7 µg/Kg	
Benzo(a)pyrene		2.39 µg/Kg	6.7 µg/Kg	
Indeno(1,2,3-cd)pyrene		3.39 µg/Kg	6.7 µg/Kg	
Dibenz(a,h)anthracene		5.59 µg/Kg	6.7 µg/Kg	
Benzo(a,h,i)perylene		3.45 µg/Kg	6.7 µg/Kg	
1-Methylnaphthalene		4.08 µg/Kg	6.7 µg/Kg	
Pentachlorophenol		—	—	
Phthalates	EPA 8270D			70 µg/Kg dry
Dimethyl phthalate		7.77 µg/Kg	20 µg/Kg	
Diethyl phthalate		16.4 µg/Kg	20 µg/Kg	
Di-n-butyl phthalate		12.4 µg/Kg	20 µg/Kg	
Butyl benzyl phthalate		11.2 µg/Kg	20 µg/Kg	
Bis(2-ethylhexyl) phthalate		11.0 µg/Kg	20 µg/Kg	

Parameter	Laboratory Method	Method Detection Limit	Method Reporting Limit	Reporting Limit Target
Di-n-octyl phthalate		8.34 µg/Kg	20 µg/Kg	
Phenolics	EPA 8270D			70 µg/Kg dry
Phenol		13.7 µg/Kg	20 µg/Kg	
2-Chlorophenol		7.48 µg/Kg	20 µg/Kg	
2-Methylphenol		14.2 µg/Kg	20 µg/Kg	
4-Methylphenol		12.8 µg/Kg	20 µg/Kg	
2-Nitrophenol		39.8 µg/Kg	100 µg/Kg	
2,4-Dimethylphenol		14.8 µg/Kg	20 µg/Kg	
2,4-Dichlorophenol		40.9 µg/Kg	100 µg/Kg	
4-Chloro-3-methylphenol		8.41 µg/Kg	100 µg/Kg	
2,4,6-Trichlorophenol		46.2 µg/Kg	100 µg/Kg	
2,4,5-Trichlorophenol		44.9 µg/Kg	100 µg/Kg	
2,4-Dinitrophenol		110 µg/Kg	200 µg/Kg	
4-Nitrophenol		66.2 µg/Kg	100 µg/Kg	
4,6-Dinitro-2-methylphenol		84.0 µg/Kg	200 µg/Kg	
Pentachlorophenol		47.7 µg/Kg	100 µg/Kg	
PCBs	EPA 8082			80 µg/Kg dry
Aroclor 1016		2.23 µg/Kg	33 µg/Kg	
Aroclor 1221		2.23 µg/Kg	33 µg/Kg	
Aroclor 1232		2.23 µg/Kg	33 µg/Kg	
Aroclor 1242		2.23 µg/Kg	33 µg/Kg	
Aroclor 1248		4.08 µg/Kg	33 µg/Kg	
Aroclor 1254		4.08 µg/Kg	33 µg/Kg	
Aroclor 1260		4.08 µg/Kg	33 µg/Kg	
Herbicides	EPA 8151			
Pentachlorophenol		4.17 µg/Kg	6.25 µg/Kg	1 µg/Kg dry
Pesticides, Organo-P	EPA 8270D			
Diazinon		1.52 µg/Kg	4.0 µg/Kg	50 µg/Kg dry
Malathion		1.08 µg/Kg	20 µg/Kg	25 µg/Kg dry
Chlorpyrifos		0.60 µg/Kg	4.0 µg/Kg	25 µg/Kg dry

(1) Laboratory methods, method detection limits, and method reporting limits (PQLs) based on information provided by Analytical Resources, Inc. (January 2008) and is subject to revision.

(2) Reporting limit targets based on information listed in Appendix 9 of the Phase I Municipal Stormwater Permit and in the additional guidance *Alternative Laboratory Methods Approved by Ecology for Use under the Phase I Municipal Stormwater Permit* (Ecology, 2008).

9.3.1.3. Alternative Analytical Methods

Alternative analytical methods not listed in Appendix 9 of the Phase I Municipal Stormwater Permit and in the additional guidance *Alternative Laboratory Methods*

Approved by Ecology for Use under the Phase I Municipal Stormwater Permit (Ecology, 2008) may be used with prior approval by Ecology. Analytical methods proposed for this project that require Ecology approval are listed below along with a brief discussion justifying their proposed use.

Proposed analytical methods listed in Table 20 for stormwater that will require prior approval by Ecology include the following: (1) fecal coliform by SM 9222D and (2) total Kjeldahl nitrogen by SM 4500-Norg D.

Fecal coliform bacterial densities may be determined either by the multiple-tube procedure (SM 9221E) or by the membrane filtration (MF) technique (SM 9222D). The MF technique is advantageous for the following reasons: (1) it provides direct enumeration of the fecal coliform group without enrichment or subsequent testing; (2) is highly reproducible; (3) can be used to test relatively large sample volumes and is applicable to a wide-range water sources, including stormwater; and (4) usually yields numerical results more rapidly that the multiple-tube fermentation procedure. A drawback to the procedure is that it can produce lower results than those produced by the multiple-tube procedure, particularly for chlorinated wastewater effluents, due to chlorination-induced stress of microorganisms. Lower recoveries have also been attributed to disinfection and toxic materials that may be present in these same waters. As a result, the MF technique is not recommended for use with chlorinated wastewater, and, if used, requires that a parallel MF/MPN evaluation be conducted.

Based on the discussion above, and the fact that chlorinated water and/or wastewater source are not expected within the project drainage area, the MF technique is proposed for the analysis of fecal coliform bacteria. Further, sodium thiosulfate, a standard preservative, will be added to all grab sample bottles prior to sterilization by the laboratory in the event that the sampled stormwater contains residual chlorine or other halogens. Further, ethylenediaminetetraacetic acid (EDTA) can be added to sample bottles prior to sterilization if sample results indicate that stormwater contains trace elements such as copper, nickel, zinc at concentrations greater than 10 μg/L (Myers et. al,, 1997).

Total Kjeldahl nitrogen can be determined by SM 4500-Norg B, C, or D. SM 4500-Norg B and C are based on the macro- and semi-micro-Kjeldahl distillation methods, respectively, whereas SM 4500-Norg D is based on the block digestion and flow injection analysis technique. The macro-Kjeldahl method is applicable for sample containing low

or high concentrations of organic nitrogen but requires large sample volumes for samples containing low concentrations. The semi-micro-Kjeldahl method is applicable to samples containing high concentrations of organic nitrogen. The block digestion method is a micro method with an automated analysis step with the capability of measuring organic nitrogen at relatively low concentrations (0.1 mg/L).

For this project, the block digestion method is proposed for use since the contract analytical laboratory's reporting limits are similar to the target reporting limits listed in Appendix 9 of the Phase I Permit.

Proposed analytical methods listed in Table 9.2 for sediments that will require prior approval by Ecology include the following: total mercury by EPA Method 7471A (*Mercury in Solid or Semisolid Waste – Manual Cold-Vapor Technique*).

Appendix 9 of the Phase I Permit failed to include total mercury in the required list of analytes in sediment. However, it was subsequently listed by Ecology in the additional guidance *Alternative Laboratory Methods Approved by Ecology for Use under the Phase I Municipal Stormwater Permit*. Currently, the alternatively approved method for total mercury in sediments is EPA Method 245.5 (*Determination of Mercury in Sediments by Cold-Vapor Atomic Absorption Spectrometry*). EPA Method 7471A and 245.5 are similar methods suitable for the analysis of sediments. The contract analytical laboratory currently performs EPA Method 7471A with a method reporting limit that is sufficiently lower than the reporting limit target. This method should therefore be considered adequate for the analysis of total mercury in sediments.

9.3.2 Toxicity Testing Procedures

This section presents an overview of the freshwater chronic toxicity test that will be used for seasonal first-flush stormwater composite samples. Toxicity testing specifications are presented for invalid or anomalous tests, follow-up actions when toxicity is detected, and yolk testing.

9.3.2.1. Analytical Instruments

Instruments used by the laboratory for routine physical and chemical measurements will be maintained and calibrated according to the internal laboratory Quality Assurance Plan (QAP), all applicable standard operating procedures (SOPs), the instrument manufacturer's specifications, and any specific method requirements.

9.3.2.2. Toxicity Testing Method

The freshwater chronic toxicity test for this project and corresponding test method, method reporting limit, and reporting limit target for seasonal first-flush stormwater toxicity testing is presented in Table 22.

Chronic toxicity testing will be conducted according to the project QAPP, the contract laboratory's QAP, and any test-specific SOPs. A listing of relevant SOPs used by the contract laboratory is included in Appendix E.

Table 22. Targeted freshwater chronic toxicity test, test method, laboratory reporting limit, and reporting limit target for seasonal first-flush stormwater toxicity testing

Parameter	Laboratory Method	Method Reporting Limit	Reporting Limit Target
Toxicity			
Environmental Canada Trout Embryo Viability	EPS 1/RM/28	NA	NA

(1) Laboratory method based on Environment Canada Biological Test Method: Toxicity Tests using Early Life Stages of Salmonid Species (Rainbow Trout), EPS 1/RM/28, 2nd Edition, July 1998 (with modifications by Canaria, et al., 1998).

(2) Reporting limit target based on information listed in Appendix 9 of the Phase I Municipal Stormwater Permit.

Procedures for the 7-day toxicity test are illustrated in the following references:

- Environment Canada. 1998. Biological Test Method: Toxicity Tests Using Early Life Stages of Salmonid Fish (Rainbow Trout). Environmental Protection Series 1/RM/28 Second Edition.
- Canaria, E.C., J.R. Elphick, and H.C. Bailey. 1999. A Simplified Procedure for Conducting Small Scale Short-Term Embryo Toxicity Tests with Salmonids. Env. Toxicol. 14, 301-307.

At the end of the 7-day test or exposure period, the surviving eggs will be placed into glass vials. Eggs are then visually tested for viability. Nonviable eggs are described as eggs failing to complete morphogenesis. The endpoint of this test includes:

- Eggs that did not survive during exposure to the stormwater sample,
- Eggs that inhibited development, and
- Eggs that were not successfully fertilized initially.

Bench sheets will be developed during the 7-day test and included in the final data report.

An EC_{50} will be calculated for each test result using the Spearman-Karber Method. Abbot's correction may be applied to the data before deriving the point estimations. A minimum of five concentrations and a control will be used. If an EC_{50} is 100% sample or less, then the permit requires follow-up actions. Information on the types of follow-up actions that may be required are discussed below.

9.3.2.3. Invalid or Anomalous Tests

Invalid toxicity tests may occur if the laboratory does not follow the test protocol or when the results do not meet the test acceptability criteria in the test protocol. The laboratory will usually identify invalid tests and arrange to repeat them. Ecology will also identify invalid tests when the laboratories do not. Anomalous test results happen when the laboratory appears to have conducted the toxicity test in accordance with the test protocol, but the results are considered unreliable according to the anomalous test identification criteria in Ecology Publication # WQ-R-95-80, *Laboratory Guidance and Whole Effluent Toxicity Test Review Criteria.* Only Ecology may identify a test result as anomalous. Invalid or anomalous tests will be repeated with freshly sampled stormwater in accordance with Section 7.6.3.

If a test is found invalid or anomalous, the Permittee will keep the results on file and report the information in the Annual Stormwater Monitoring Report. A second attempt for toxicity testing is necessary (see Section 7.6.3).

9.3.2.4. Follow-up Actions When Toxicity Detected

Follow-up actions when toxicity is detected ($EC_{50} \leq 100\%$ sample) are based upon an evaluation of sample chemistry compared to an existing library of fish embryo toxicity test results (Trout Library).

If the EC_{50} from any valid and non-anomalous test is 100% stormwater or less, the following procedures will be followed:

- Preserve terminated organisms for up to six months.
- Compare the chemical analytical results to the Trout Library to determine the presence of a detected toxicant within sixty (60) days after final validation of the data.
- Determine, through a good faith effort, if the presence of a detected parameter is within the range reported in the Trout Library that may adversely affect fish embryos, and if so, review the source literature found in the Trout Library.

The results of the toxicity testing, and documentation of follow-up actions, will be submitted to Ecology with the appropriate Annual Stormwater Monitoring Report. Section 13.3 describes the contents of reporting on toxicity.

The follow-up actions when toxicity is detected may also include potentially adding other chemicals to the parameter list for future sampling. Chemicals found by yolk analysis may be worth measuring in stormwater to allow a quantitative comparison to the Trout Library. The list of PAHs, pesticides, and other chemicals analyzed may be expanded for future samples if additional analyses may possibly help resolve toxicant identity. The list of analyses should be expanded only if knowledge of industrial or commercial activity within the drainage area suggests the presence of a chemical which the fish embryo toxicity library (Trout Library) shows could be toxic to this life stage or if a potentially toxic chemical has been found in the yolk.

If a possible chemical contaminant of concern is not determined by library comparison and literature review, then a Gas Chromatograph/Mass Spectrometer (GC/MS) analysis of the eggs from the highest test concentrations will be performed, as described below.

9.3.2.5. Gas Chromatograph/Mass Spectrometer (GC/MS) Yolk Testing

If the concurrent chemical analyses of the sample do not detect any chemicals at concentrations known to adversely affect fish embryos, then a Gas Chromatograph/Mass Spectrometer (GC/MS) analysis of the yolks from the highest test concentration (usually 100%) is needed. The GC/MS need not be quantitative but only capable of identifying stormwater contaminants present in the embryo or yolk.

Procedures for GC/MS extraction of yolk/embryos may vary between laboratories. The approved toxicity laboratory will be consulted for methods and procedures for this analysis. Example procedures include, but are not limited to the following:

- Washington State Department of Ecology Manchester Environmental Laboratory, Standard Operating Procedures for Micro-Acetonitrile Back Extraction Clean-up of Fish Tissue, Version 1.0, 2006.
- Puget Sound Water Quality Action Team, Recommended Guidelines for Sampling Marine Sediment, Water Column and Tissue in Puget Sound, April 1997.
- Environmental Protection Agency, SW-846, Method 3500B, Organic Extraction and Sample Preparation, 1996.

- U.S. Geological Survey, EPA Extraction and Lipid Separation of Fish Samples for Contaminant Analysis and Lipid Determination, Standard Operating Procedure # HC521A, Great Lakes Science Center, Ann Arbor, Michigan, Version 1, 1995.
- Washington State Department of Health, Human Health Evaluation of Contaminants In Puget Sound Fish, 2006.

To be most useful, a yolk/embryo analysis should not be restricted to the list of chemical parameters required by the Phase I Permit. The GC/MS should capture and identify as many chemicals as it reasonably can. The Trout Library has many more chemicals than the required parameters, and will be useful for comparing GC/MS results. Yolk analysis need not be quantitative because the Trout Library is based upon water and not tissue concentrations. The presence of a chemical within the yolk/embryo means that the exposure can be considered significant enough to warrant checking the Trout Library to see if the chemical might be toxic to the embryo life stage. If the GC/MS analysis of the yolks and embryos does not find any candidate toxicants, then the number of replicates at 100% sample will be increased to provide more tissue to the laboratory and lower the detection limits for possible toxicants.

If a chemical detected in the yolk/embryo testing is added to the list of parameters measured in stormwater samples, its analysis will be quantitative so that concentrations can be compared to fish embryo toxicity data. Ecology will be entering the results of the chemical analyses and trout embryo toxicity testing into a database for evaluation over the long term. Examination of results at the same outfall over time and from different outfalls from around the state may reveal patterns of chemical analytical results related to toxicity test results. The overall goal of toxicity data is to update Ecology's understanding of stormwater toxicity and provide information upon which to base adaptive stormwater management. As long as this goal is being met, confirmation of toxicant identity is not necessary.

10.0 QUALITY CONTROL

This section presents the quality control (QC) requirements for field and laboratory activities associated with this project. Project quality control (QC) procedures will include the collection and analysis of field QC samples and the use of standard laboratory QC analyses. The overall quality of data generated during this project will be evaluated in terms of the MQIs specified in Section 6.2 to ensure that project data quality objectives are met.

10.1 FIELD QUALITY CONTROL

Field quality control requirements for this project will include recommended procedures for sampling and field measurement equipment, field documentation, sample collection, field QC samples, and possible corrective actions for field activities.

10.1.1 Field Quality Control Procedures

Preventative maintenance of the flow meter, automatic sampler, on-site rain gage, and field instrumentation will be preformed as specified by the manufacturer. The sampler and flow meter will be calibrated to the manufacturer's recommendations.

Original field records will be maintained in designated binders for all monitoring and field related activities using project-specific forms and established procedures. Field documentation will include storm data field sheets; maintenance inspection field sheets; sediment trap deployment, inspection, and retrieval field sheets; maintenance activity logs; work permits for confined spaces; chain-of-custody forms; and other required documentation (see Appendix C). All entries in field notebooks will be written in waterproof ink. When errors are made on accountable documents, the person who made the error will make the correction by crossing a line through the error and entering the correct information. All corrections will be initialed and dated.

The sampling efforts for this program will employ the following field QC procedures to ensure consistency, reduce contamination, and ensure representative samples:

- Collect composite water samples using an automatic sampler.
- Collect integrated sediment samples over multiple months using sediment traps.
- Collect samples in certified contaminant-free or properly decontaminated containers.
- Store sampling containers in clean, sealed boxes or bags prior to use.

- Use "clean hands/dirty hands" sampling techniques (that is, one team member performs "dirty tasks" such as lifting manhole covers and handling samplers with batteries, while the other member performs "clean tasks" such as handling sample intake lines and sample collection bottles).
- Use EPA's "clean techniques" guidance document for trace metals (US EPA 1996), adapted to meet equipment and sampling constraints.
- Periodically clean and replace Teflon-lined sampler tubing and strainers as necessary.
- Backflush sampler tubing with deionized water immediately prior to sampling event.
- Cool automatic samplers with ice when ambient temperatures require.
- Hold samples on ice in coolers during retrieval and delivery to laboratory.
- Deliver samples to laboratory with proper chain of custody, and within recommended holding times.

Field QC samples will be targeted for collection during storm events to be determined by the Consultant Technical Lead. Field QC samples will require special labeling and tracking procedures. All field duplicate samples will be collected in an identical manner to the primary "parent" field samples and receive an independent sample identification code. All blank samples (e.g., field, equipment, and processing blanks) will be appropriately labeled. The various types of field control samples planned for this project, procedures for their collection, and possible corrective measures are discussed below.

Field corrective actions will be taken during this project to ensure the overall management of the project. The corrective action process will consist of identifying a problem, acting to eliminate the problem, monitoring the effectiveness of the corrective action, verifying that the problem has been eliminated, and documenting the corrective action. Examples of corrective actions are correcting chain-of-custody forms; correcting problems in sample collection, packing, transporting, field record keeping; or additional training in sampling. Additional activities may include re-sampling or evaluating and amending sampling procedures.

10.1.2 Field Control Samples

Field QC samples are typically used to assess sample collection procedures; environmental conditions during sample collection, storage, and transport to the laboratory(s); and the adequacy of equipment and sampling container decontamination. A rule-of-thumb of ten percent is typically used for the collection of field QC samples.

The types of field QC samples that will be collected for this project to meet QAPP objectives include the following:

- Field duplicate samples
- Field blanks
- Field equipment (rinsate) blanks
- Temperature blanks
- Trip blanks

Additional field QC samples may be needed to meet data quality objectives and quality control goals established within this QAPP.

10.1.2.1. Field Duplicates

The purpose of collecting and analyzing field duplicates is to demonstrate the precision of sampling and analytical processes. In general, a replicate or duplicate sample is defined as two (or more) samples collected at the same time and place and represent a way to estimate the total random variability (precision) of individual results. In this case, the field duplicate sample can be used to measure whether environmental conditions are changing faster (are more variable) than the repeatability of the sampling procedure.

Field duplicates will be collected at the rate of approximately ten percent of all storm events sampled, and analyzed along with the associated environmental sample. For this project, a single field duplicate sample will be targeted for collection on an annual basis (water year). Field duplicates will consist of an "internal" duplicate, which will include a replicate (composite stormwater) sample collected at the same time using a single autosampler configuration. The autosampler will be programmed to collect sequential aliquots of stormwater and deliver them to two separate sets of parameter-specific bottles, specifically bottles designated for the collection of trace metals and conventional parameters (acid cleaned) and those for the collection of organics and nutrients (organic free). Additionally, field duplicates will be collected for those parameters that require grab samples (i.e., fecal coliform and TPH) by filling an additional set of grab sample bottles in rapid succession. Field duplicate samples will be assigned a unique sample identifier added to the sample identification.

Field duplicate results are typically used as a qualitative evaluation of sampling precision and are not used as a basis for qualifying data or accepting/rejecting data. However, if the relative percent difference of field duplicate results is greater than twenty-five percent, the sampling crew should be notified so that the source of sampling variability can be

identified (if possible) and corrective measures taken prior to the next sampling event. This will not be applicable to grab samples collected for fecal coliform due to the inherent variability with bacteriological analyses.

10.1.2.2. Field Blanks

Field blanks will be collected in order to check for possible contamination of laboratory-cleaned autosampler containers, as well as possible cross-contamination during transportation and storage of the samples. Deionized water, provided by the contract analytical laboratory, will be poured into a randomly selected set of sample containers on site. The set of containers will consist of one bottle each from the parameter-specific bottle groups used for routine flow-weighted stormwater composite sampling, as described above. The blank samples will be assigned a unique sample identification code, labeled, and analyzed by the contract analytical laboratory for the analytes of interest. Field blanks will be collected during two storm events on an annual basis (water year), which corresponds to an approximate frequency of ten percent.

If any analytes of interest are detected at levels greater than the method reporting limit for a particular parameter, the field sampling crew should be notified so that the source of contamination can be identified (if possible) and corrective measures taken prior to the next sampling event. If the concentration in the associated samples is less than ten times the value in the field blank, the results for the environmental samples may be unacceptably affected by contamination and should be qualified as appropriate. If contamination is detected, and analyte method blank results rule out the laboratory as a source of contamination, then field blanks must be collected at a rate of 100% of samples until the source of contamination is eliminated (if possible).

10.1.2.3. Field Equipment Blanks

Equipment (rinsate) blanks are collected to check for potential contamination of sampling and processing equipment and are used to assess the effectiveness of cleaning or decontamination procedures. The equipment blank may also detect contamination from the surroundings, from containers, or from cross-contamination during transportation and storage. Equipment blanks will also be collected from any equipment used to composite samples in the field and during post-storm event processing at the contract analytical laboratory.

Composite sampler equipment blanks will be collected during equipment set up, prior to the beginning of a storm event. The sampler will be accessed prior to the event and the

sampler strainer and intake tubing will be decontaminated followed by a system rinse whereby deionized water is pumped through the entire system using the sampler pump. Blanks will be obtained by allowing the autosampler to fill a set of sample containers with deionized water provided by the contract analytical laboratory, using the same procedures used for routine stormwater composite samples. The set of containers will consist of one bottle each from the parameter-specific bottle groups used for routine flow-weighted stormwater composite sampling, as described above. Blanks will be collected during two storm events on an annual basis (water year), which corresponds to an approximate frequency of ten percent. In order to check for potential contamination, blanks will be collected early in the sampling season and during a mid-season storm event. The blank samples will be assigned a unique sample identification code, labeled, and analyzed by the contract analytical laboratory for the analytes of interest.

Equipment blanks will be collected for processing equipment used for preparing the post-storm event composite samples and subsamples. The equipment used for this project for post-storm event processing is described in Section 9.2. Pre-cleaned processing equipment will be rinsed with deionized water provided by the contract analytical laboratory. The rinsate will be collected into designate laboratory sample container, assigned a sample identification code, labeled, and analyzed by the laboratory. Processing equipment blanks will be collected twice on an annual basis (water year), which corresponds to an approximate frequency of ten percent.

If any analytes of interest are detected at levels greater than the method reporting limit for a particular parameter, the field sampling and/or sample processing crew should be notified so that the source of contamination can be identified (if possible) and corrective measures taken prior to the next sampling event. If the concentration in the associated samples is less than ten times the value in the equipment or processing blank, the results for the environmental samples may be unacceptably affected by contamination and should be qualified as appropriate. If contamination is detected, and analyte method blank results rule out the laboratory as a source of contamination, then equipment or processing blanks must be collected at a rate of 100% of samples until the source of contamination is eliminated (if possible).

10.1.2.4. Temperature Blanks

Temperature blanks are prepared in the field using distilled or deionized water and placed in sampler cooler(s) and transported to the laboratory. The laboratory can use this blank to check the temperature of the samples upon receipt. Temperature blanks will be

prepared in a designated laboratory container, assigned a sample identification code, labeled, and checked upon receipt. Temperature blanks will be submitted with all environmental samples delivered or shipped to the contract laboratory(s) for all storm events monitored during this project.

If the temperature measured by the laboratory exceeds the method-specific temperature requirement for a particular parameter, the field sampling crew should be notified so that corrective measures can be taken prior to the next sampling event.

10.1.2.5. Trip Blanks

Trip blanks are usually prepared by the contract analytical laboratory and are carried (unopened) into the field during a sampling event. These samples are typically only utilized when the parameters of interest include volatile organic compounds. Trip blanks will not be required for this program based on the constituents discussed in this QAPP.

Table 23 describes the guidelines for project field QC samples, including the type, frequency, acceptance limits, and corrective actions.

Table 23. Summary of project field quality control requirements

Field QC Sample	Frequency	Control Limit	Corrective Action(s)
Field duplicate	Once annually	Not applicable; qualitative eval. only	Review, modify sample collection procedures
Field blank (sample containers)	Twice annually	Analyte concentration less than reporting limit	Compare analyte method blank results to rule out lab contamination; review modify sample collection/equipment decontamination procedures; evaluate any analyte results that are <10x blank conc.
Equip. blank (autosampler)	Twice annually	Analyte concentration less than reporting limit	Compare analyte method blank results to rule out lab contamination; review modify sample collection/equipment decontamination procedures; evaluate any analyte results that are <10x blank conc.
Equip. blank (post-storm event processing)	Twice annually	Analyte concentration less than reporting limit	Compare analyte method blank results to rule out lab contamination; review modify sample processing/equipment decontamination procedures; evaluate any analyte results that are <10x blank conc.

Field QC Sample	Frequency	Control Limit	Corrective Action(s)
Temperature blank	Each sample delivery/shipment	Temperature at or below method-specific limits	Review, modify sample collection, transport, and storage procedures
Trip blank	NA	NA	NA

(1) The type and frequency of field QC samples collected annually as part of the routine stormwater monitoring should satisfy QA/QC requirements for annual sediment monitoring. In the event that sufficient sediment sample is collected, a single field duplicate may be submitted for analysis.

(2) Field QC samples included above will not be collected for seasonal toxicity testing, with the exception of temperature blanks.

10.2 LABORATORY QUALITY CONTROL

The contract analytical laboratory will perform all chemical and physical analyses requested. In addition to performing the analysis, the laboratory will make every effort to meet holding times and target reporting limits for each analysis. Specific QA/QC policies and procedures followed by the contract analytical laboratory are detailed in the laboratory's Quality Assurance Plan (QAP) and/or method-specific standard operating procedures (SOPs). The following section summarizes the laboratory QA/QC procedures that will be used to assess data quality throughout sample analysis.

10.2.1 Laboratory Control Samples

Routine analysis of laboratory quality control samples is necessary to validate the quality of the data produced. The type of QC analyses, frequency, and procedures depend on the analytical method and/or the QA/QC protocols required for a specific project. When all laboratory QC sample results are acceptable, the specific analysis is considered to be "in-control" and the data suitable for their intended use. Conversely, laboratory QC sample results that do not meet the specified acceptance criteria indicate that the procedure may not be generating acceptable data and corrective action may be necessary to bring the process back "in-control".

The specific procedures and frequencies for analytical quality control samples are detailed for each analytical method in the contract laboratory's Quality Assurance Plan (QAP). Typical laboratory QC samples include (but are not limited to) the following:

- Method blanks,
- Laboratory control samples,
- Laboratory matrix replicates (inorganic/conventional parameters)
- Matrix spikes,
- Matrix spike duplicates (organic parameters),

- Standardized reference materials, and
- Other quality indicators

10.2.1.1. Method Blanks

A method blank is an aliquot of water or solid sample matrix that is free of target analyte and is processed as part of a sample batch. The purpose of analyzing method blanks is to demonstrate that contaminants or compounds of interest are not introduced into samples during laboratory processing. Method blanks will be prepared and analyzed by the contract analytical laboratory at a rate of at least one per twenty samples or one per analytical batch (whichever is more frequent). Method blanks generally consist of laboratory-prepared blank water processed along with the batch of environmental samples, and contain all reagents and undergo all procedural steps as a regular environmental sample for each analysis. An acceptable method blank is required prior to the analysis of field samples from a preparation batch.

For this project, an acceptable method blank result will be assumed as one that contains no target analyte at a concentration greater than one-half the contract analytical laboratory's reporting limit. An exception would include common laboratory contaminants, which may exceed the method detection limits (for select organic analytes) but may not be present at concentrations greater than five times the method reporting limit. If the results for a single method blank exceed the acceptance criteria, the source(s) of contamination should be corrected following established laboratory procedures. If necessary, the associated samples should be reprocessed and reanalyzed; however, this will not apply in situations where the analyte is detected in the samples at levels ≥ 20 times the method blank level. Remaining sample, analytical hold times, and relative sample concentrations will determine whether samples can be reanalyzed. If reanalysis is not possible, the associated sample results should be qualified, as appropriate.

10.2.1.2. Laboratory Control Samples

A laboratory control sample is an aliquot of water or solid matrix free of target analytes to which selected (method specific) target analytes are added in known quantities. The purpose of analyzing laboratory control samples is to demonstrate the accuracy of the analytical method. Laboratory control samples will be prepared and analyzed by the contract analytical laboratory at a rate of at least one per twenty samples or one per analytical batch (whichever is more frequent). For this project, laboratory control samples will consist of laboratory fortified method blanks prepared at a concentration that falls

within the analytical calibration range, but at a concentration different than the standards used to establish the analytical calibration curve.

Following analysis the percent recovery of each added analyte is calculated and compared to acceptance criteria (historic control limits established by the contract laboratory). If the recovery of any analyte is outside the acceptable range for accuracy, the analytical process is not being preformed adequately for that analyte and corrective actions may be required. If necessary, the sample batch should be prepared again, and the laboratory control sample reanalyzed. If reanalysis is not possible, the associated sample results should be qualified, as appropriate.

10.2.1.3. Laboratory Matrix Replicates

The purpose of analyzing replicates is to demonstrate the precision of the analytical method. Replicates are two or more identical analyses performed on subsamples of the same environmental sample at the same time, and should be performed on samples that are expected to contain measurable concentrations of target analyte. For inorganic analyses, a minimum of one replicate set will be processed by the contract analytical laboratory for each analytical batch. Laboratory matrix replicates will also be analyzed for field duplicate samples collected as part of this program, at the targeted frequency specified above. Field sample collection procedures will be modified to ensure the collection of sufficient sample volumes to prepare replicate aliquots from field duplicate samples. Replicate samples are not routinely performed for organic parameters. Instead, analytical precision is evaluated through the analysis of duplicate matrix spike samples.

If the relative percent difference for any analyte is greater than the precision criteria, the analytical process is not being performed adequately for that analyte and corrective actions may be required (procedure evaluation), unless the excessive difference between the replicate samples is clearly matrix related. In cases where matrix problems are not suspect, the sample batch may be prepared again and laboratory replicates reanalyzed. If reanalysis is not possible, the associated sample results should be qualified, as appropriate.

10.2.1.4. Matrix Spikes

A matrix spike is an environmental sample to which known quantities of selected (method specific) target analyte have been added. The matrix spike is processed as part of an analytical batch and is used to measure the efficiency and accuracy of the analytical process for a particular sample matrix. Matrix spikes will be prepared and analyzed by

the contract analytical laboratory at a rate of at least one per twenty samples or one per analytical batch (whichever is more frequent). Matrix spikes will also be analyzed for field duplicate samples collected as part of this program. Field sample collection procedures will be modified to ensure the collection of sufficient sample volumes to prepare matrix spike aliquots from field duplicate samples.

Following analysis the percent recovery of each spiked analyte is calculated and compared to specified acceptance criteria. If the recovery of any spiked analyte is outside the acceptable range for accuracy, the analytical process is not being performed adequately for that analyte and corrective actions may be required. If recovery of laboratory control samples for any organic analysis is acceptable, the analytical process is being performed adequately for that analyte, and the problem is most likely attributable to the sample matrix. Matrix spikes with unacceptable recovery values for inorganic analyses will be reprocessed and reanalyzed. If reanalysis results still fail to meet acceptance criteria, it will be assumed that that the sample matrix is affecting the recovery values. If matrix problems cannot be corrected, or reanalysis is not possible, the associated sample results should be qualified, as appropriate.

10.2.1.5. Matrix Spike Duplicates

A matrix spike duplicate is prepared in an identical manner to the matrix spike. Matrix spike duplicate analyses are often used to measure method precision and accuracy. In this case, the relative percent difference for recovery of a spiked analyte is calculated and compared to acceptance criteria. Matrix spike/matrix spike duplicate analyses will be performed only for required organic analyses, whereas matrix spike and laboratory replicate samples will be performed for required inorganic analyses. Matrix spike/matrix spike duplicates will be prepared and analyzed by the contract analytical laboratory for organic analysis at a rate of at least one pair per twenty samples or one pair per analytical batch (whichever is more frequent). Matrix spike duplicates will also be analyzed for field duplicate samples collected as part of this program.

If relative percent difference values between matrix spike duplicates do not meet acceptance criteria, but spike recovery values are acceptable, no re-extraction or analysis will be required. It will be assumed that the sample is not homogenous, causing poor analytical precision. If relative percent difference values between matrix spike duplicates do not meet acceptance criteria, and recovery values in one or both replicates in not acceptable, the sample and associated matrix spike replicates will be reprocessed and reanalyzed, provided sufficient sample is available and/or holding time remaining. If the

reanalysis results are not within acceptance limits, it will be assumed that the sample is not homogenous, causing poor analytical precision.

10.2.1.6. Standardized Reference Material

A standard reference material is analyzed and certified by an outside organization to contain known quantities of select target analytes independent of analytical methods. These materials are normally purchased from suppliers outside of the contract analytical laboratory and are supplied with acceptance criteria. Analysis of standard reference materials is used to assess the overall accuracy of the laboratory's analytical process, and are routinely analyzed with each batch of sample for wet chemistry (conventionals analysis) samples. External reference samples are analyzed after instrument calibration and prior to sample analysis. Compound recovery values not within the specified limit indicate the need to evaluate either the calibration standards or instrumentation. These corrective actions will be conducted, as necessary, following procedures outlined in the contract laboratory's Quality Assurance Plan.

10.2.1.7. Other Quality Indicators

In addition to analyzing the quality control samples outlined previously, various indicators are added to environmental samples to measure the efficiency and accuracy of the contract analytical laboratory's analytical processes. Surrogate standards are added to extractable organic samples prior to extraction to monitor extraction efficiency. Internal standards are added to metals digestates for ICP-MS analyses and to organic samples or extracts prior to analysis to verify instrument operation.

The calculated recovery of surrogate analyses is compared to historic control limits maintained by the analytical laboratory to aid in assessing analytical efficiency for a given sample matrix. When these analyses fail to meet specific acceptance criteria, corrective actions are conducted consistent with the contract laboratory's Quality Assurance Plan.

Table 24 describes the guidelines for project analytical laboratory QC samples, including the type, frequency, acceptance limits, and corrective actions. Specific details on laboratory QC analyses, including corrective actions, are included in the contract analytical laboratory's Quality Assurance Plan.

Table 24. Summary of project laboratory quality control requirements

QC Procedure	Analysis	Frequency	Control Limit	Corrective Action(s)
Method Blank	Inorgs.	5% or 1 per analysis batch	Analyte conc. ≤ PQL/MRL	Eval. procedure; identify contam. source; pot. batch/sample reanalysis; eval./qualify data <10x blank conc.
	Convent.	Method specific; 5% or 1 per anal. batch, if req'd	Analyte conc. ≤ PQL/MRL	Eval. procedure; identify contam. source; pot. batch/sample reanalysis; eval./qualify data <10x blank conc.
	Organics/ TPH	5% or 1 per analysis batch	Analyte conc. ≤ PQL/MRL	Eval. procedure; identify contam. source; pot. batch/sample reanalysis; eval./qualify data <5-10x blank conc.
LCS or SRM	Inorgs.	5% or 1 per analysis batch	80-120% recovery, or CCL	Eval. procedure; recalibrate; pot. batch/sample reanalysis; eval./qualify affected data.
	Convent.	Method specific; 5% or 1 per anal. batch, if req'd	Analyte-specific recoveries; usually 80-120%	Eval. procedure; recalibrate; pot. batch/sample reanalysis; eval./qualify affected data.
	Organics/ TPH	5% or 1 per analysis batch	Analyte-specific recov; usually 50-140 (org) & 50-150 (TPH); LCL/CCL	Eval. procedure; recalibrate; pot. batch/sample reanalysis; eval./qualify affected data.
Matrix Spike	Inorgs.	5% or 1 per anal. batch; field duplicate (1/yr)	75-125% recovery	Eval. procedure and assess pot. matrix effects; pot. batch/sample reanalysis; eval./qualify affected data.
	Convent.	Method specific; 5% or 1 per anal. batch, if req'd; field dup.	Analyte specific recoveries; usually 75-125%	Eval. procedure and assess pot. matrix effects; pot. batch/sample reanalysis; eval./qualify affected data.
	Organics/ TPH	5% or 1 per analysis batch; field dup.	Analyte-specific recov; usually 50-140 (org) & 50-150 (TPH)	Eval. LCS or SRM recoveries to assess pot. matrix effects; eval./qualify affected data.
Sample or Spike Replicate	Inorgs.	Duplicates @ 5% or 1 per anal. batch; field dup.	20% RPD	Eval. procedure and assess pot. matrix effects; pot. batch/sample reanalysis; eval./qualify affected data.
	Convent.	Dup. / trip. @ 5% or 1 per anal. batch; field dup.	20% RPD/RSD	Eval. procedure and assess pot. matrix effects; pot. batch/sample reanalysis; eval./qualify affected data.
	Organics/ TPH	MS spike dup. @ 5% or 1 per anal. batch; field dup.	40% RPD (organics) 50% RPD (TPH)	Eval. procedure and assess pot. matrix effects; pot. batch/sample reanalysis; eval./qualify affected data.

(1) Definition of terms used: CCL – certified control limits; LCL – laboratory control limits; MRL – method reporting limit; PQL – practical quantitation limit; RPD – relative percent difference; RSD – relative standard deviation.

10.3 TOXICITY TESTING QUALITY ASSURANCE

The contract toxicological laboratory will perform the freshwater chronic toxicity test and related chemical analyses requested. Specific QA/QC policies and procedures followed by the laboratory are detailed in the laboratory's Quality Assurance Plan (QAP).

Toxicity tests should meet quality assurance criteria in the most recent versions of the Environment Canada manual EPS 1/RM/28 and the Department of Ecology Publication #WQ-R-95-80, *Laboratory Guidance and Whole Effluent Toxicity Test Review Criteria*. The specific standard operating procedure used by the contract laboratory is provided in Appendix E. In general, the toxicity test shall have five concentrations and a control with four replicates at each concentration. An additional seven replicates of 100 percent sample shall be run in order to provide tissue for yolk/embryo analysis if needed. The test concentration series shall be determined using a 0.5 dilution factor.

11.0 DATA MANAGEMENT PROCEDURES

There are three types of data that will be generated for this component of the Port's long-term monitoring program: (1) field activity data, including sample collection and monitoring equipment maintenance activities; (2) field monitoring data, including flow and precipitation data; and (3) laboratory data, including water quality, toxicity and sediment quality data.

11.1 FIELD ACTIVITY DATA

Field activity data will be recorded in the field notebook. The field notebook will include the following data sheets: completed storm data field sheets, chain-of-custody forms, maintenance inspection field sheets, and the maintenance activity log. Copies of these field data sheets are in Appendix C. The Consultant Technical Lead is responsible for updating and storing the field notebook. The field notebook will be photocopied monthly, and the copy stored at the Consultant's offices.

11.2 FIELD MONITORING DATA

Field data to be collected include flow and precipitation data. Flow data includes water level and flow rate. Flow data will be downloaded at the site by field staff onto a project designated laptop computer and stored in a Teledyne Isco's Flowlink® or similar software database. Rainfall data will be downloaded remotely using a telephone modem as needed and imported into the database. The Consultant Technical Lead is responsible for maintaining and backing-up the project database. The project database will be backed up weekly, with back-up files stored at the Consultant's offices.

11.3 LABORATORY DATA

All laboratory reports will be transmitted electronically and via hard copy to the Project Data Manager. Data reported electronically by the analytical and toxicology laboratories will be transferred to the Port's Environmental Management Information System (EMIS). Data from EMIS may be exported to Excel spreadsheets or other software programs for analysis by the Consultant Technical Manager after undergoing review, verification, and validation, as described in Section 14.0. The laboratory reports will be included as appendices in the annual reports.

12.0 ASSESSMENT/OVERSIGHT

Assessment and oversight activities will be performed to determine whether the QC measures identified in the QAPP are being implemented and documented as required. Audits and reviews are the tools to implement this process. For example, during a review, the auditor may check that a monitoring station has been correctly sampled or that the field QC samples were collected at the appropriate frequency. During an audit or review, the auditor may check for:

- Adherence to the site-specific plans.
- Documentation of the process or system.
- Proper identification, resolution, and documentation of nonconformance with the process or system.
- Correction of identified deficiencies.
- Assessments and Response Actions.

12.1 ASSESSMENTS AND RESPONSE ACTIONS

The need for an audit can be determined independently by the Consultant Project Manager, at the recommendation of the Port of Seattle, or at the recommendation Ecology. Assessment activities may include surveillance, inspection, peer review, management system review, readiness review, technical systems audit, performance evaluation, and data quality assessment. The Consultant Project Manager, with assistance from the Quality Assurance Manager, will be responsible for initiating audits, selecting the audit team, and overseeing audit implementation. Audits of the analytical laboratories will be performed in accordance with the laboratory subcontract. The Consultant Project Manager, Quality Assurance Manager or designee, in compliance with the subcontract, will perform laboratory audits.

Field audits also may be conducted by the Project Manager, Quality Assurance Manager, or a designee.

12.1.1 Laboratory Performance and Systems Audits

Laboratory systems may be audited in accordance with project requirements. Contracted laboratories must submit a laboratory Quality Assurance Plan (QAP). The QAP must include relevant standard operating procedures, a description of the laboratory's internal

procurement policies, and its corrective action program. The laboratory audits will address at least the following questions:

- Is the laboratory operation being performed as required by the subcontract?
- Are internal laboratory operations being conducted in accordance with the laboratory QAP?
- Are the laboratory analyses being performed in accordance with method requirements?

Any nonconformance noted during an audit will result in a corrective action.

12.1.2 Field Team Performance and System Audits

The Consultant Project Manager, Quality Assurance Manager or a designated representative may conduct audits of the field activities in accordance with the project requirements. The audit will address at least the following questions:

- Are sampling operations being performed as stated in the QAPP and SOPs?
- Are the sample labels being filled out completely and accurately?
- Are the COC records complete and accurate?
- Are the field notebooks being filled out completely and accurately?
- Are the sampling activities being conducted in accordance with the QAPP and SOPs?
- Are the documents generated in association with the field effort being stored as described in the QAPP and SOPs?

The generation and documentation of field data also will be audited. The audits will focus on verifying that proper procedures are followed so that subsequent sample data will be valid. Any nonconformance noted during an audit will result in corrective action.
The results of the assessment and oversight activities will be reported to the Project Manager, who has ultimate responsibility for ensuring that the corrective action response is completed, verified, and documented.

13.0 REPORTING

Three types of reports will be generated in relation to the Stormwater Monitoring Program activities covered in this QAPP. These report types are:
(1) Storm Files,
(2) Status Reports to Management, and
(3) Annual Stormwater Monitoring Reports

The first two types of reports are not required by the Permit, but will be used at the discretion of the Project Manager as internal reports to track the progress of the stormwater sampling program. The third type of report, the Stormwater Monitoring Report, is required by the Phase I Permit to be included as a section in the overall Annual Report (per Permit §S8.H and §S9.G). The following sections describe the three types of reports.

13.1 STORM FILES

Storm files are internal documents (in other words, not required by the Phase I Permit) to track the results and details of each stormwater sampling event. The assemblage of storm files throughout the water year will be utilized for the efficient and accurate development of certain components of the Annual Stormwater Monitoring Report, as described in Section 13.3.

A typical storm file may include the following information and components:

- Stormwater hydrograph, showing runoff flow rate and rainfall and when samples were collected.
- Validation sheet indicating how the storm event and the samples collected have met the criteria listed in Section 7.0.
- Copies of pertinent sampling field sheets, maintenance inspection field sheets, and maintenance activity logs
- Copies of sample chain-of-custody forms
- Documentation of weather tracking and forecasts
- Any supporting documents, calculations, or discussion of anomalies or issues that will be needed for later data analysis and reporting.

Storm files will be prepared shortly after each successful sample event.

13.2 STATUS REPORTS TO MANAGEMENT

Status reports to track Stormwater Monitoring Program progress may be prepared and submitted to the Project Manager as frequently as quarterly. A typical status report may include the following information and components:

- A summary of the number of successful valid samples to date for the water year (indicating the number in the wet and dry seasons) and where the project is at in relationship to the overall proposed schedule,
- Summary of the quality control and validation review of the analytical data reports (water quality and sediment), and
- Discussion of any stormwater monitoring program issues that may need to be addressed.

13.3 ANNUAL STORMWATER MONITORING REPORT

The Stormwater Monitoring Report (per Permit §S8.H) is a required component of the Annual Report (per Permit §S9.G). The Annual Stormwater Monitoring Report will compile sampling results from the previous water year[6]. Table 25 below summarizes the period of monitoring results that will be included in each Annual Stormwater Monitoring Report for the life of the Phase I Permit.

Table 25. Data collection period included in each annual report

Report Date	Includes Sampling Data from
March 31, 2010	March 2009 through September 2009
March 31, 2011	October 2009 through September 2010
March 31, 2012	October 2010 through September 2011
Next permit cycle	October 2011 through March 2012 (end of permit)

Each Annual Stormwater Monitoring Report will include the following three components (per Permit §S8.H.1):

(1) Stormwater monitoring summary,
(2) Data and QA/QC report, and
(3) Pollutant loading calculations.

Each of the three Annual Stormwater Monitoring Report components is described below.

[6] The first Annual Stormwater Monitoring Report submitted under this QAPP will include data from only a portion of the water year.

13.3.1 Stormwater Monitoring Summary

This component will include a summary of the location, land use, drainage area, and hydrology for the basin that was monitored. Additionally, this component of the report may include any new basin information that was not presented in the QAPP. For example, this discussion may include any basin changes that would affect hydrology or pollutant loadings or how baseflow or backwater conditions at the site have affected sample collection.

13.3.2 Data Report and QA/QC Report

This component will explain and discuss the monitoring program results for the water year. The overall goal of this component will be to present data and analyses; to document data completeness, representativeness, quality, and usability; and to discuss any data anomalies or issues.

The data report section may, for example, include the following:

- A summary of to what degree the sampled storm events met the criteria listed in Section 7.0,
- A summary of the total number of qualifying storm events during that water year, the number of storm event samples attempted, and the total number of storm events successfully sampled,
- Hydrographs for each successfully sampled storm showing flow rate, rainfall, and indication of sample aliquot collection (obtained from Storm Files),
- Analytical results tables for each sample event,
- Analytical results tables for sediment samples,
- Toxicity testing reports, and
- Description of any significant changes made, or to be made, to the sampling program.

The data QA/QC section will include a summary and discussion of the following:

- Field quality control procedures and data quality indicator results (Section 10.1), and
- Laboratory quality control procedures and the degree to which measurement quality objectives were met, as described in Section 10.2.

The above data QA/QC information may be a compilation of data validation memos for each sampling event, along with a summary that applies to the entire reporting period. This section will also discuss any planned changes or deviations from the current QAPP that address QA/QC issues or procedures.

13.3.3 Pollutant Loading Calculations

Both wet and dry season pollutant loads will be calculated (per Permit §S8.H.1.a.iv). The annual (water year) pollutant load will be the sum of the wet and dry season pollutant loads. Pollutant loads will be calculated using runoff volume based on continuous flow monitoring and from flow-weighted composite sample analytical data.

Other water quality monitoring data collected from the project monitoring station will be reported in the Annual Report (per Permit §S8.H.2). Additionally, other non-permit required stormwater monitoring conducted during the reporting period will be described in the Annual Report (per Permit §S8.H.2).

The general procedure for calculating the wet season or dry season pollutant load will be:

(1) Any gaps in flow data will be filled to create a complete flow data set. Missing flow data will be estimated based on existing rainfall-to-flow data curves for the period and season most representative of the period of missing data.

(2) Analytical concentrations reported as "non-detect" will be assigned a value equal to one half of the detection limit.

(3) Determine pollutant concentrations for times when sampling was not conducted. Use one of the two methods described below.

<u>Method A</u> Regression between EMC concentrations and event total runoff volume (or average flow rate). The regression may be differentiated between wet and dry seasons, or done as a whole:

a. Conduct a linear regression between EMC and event flow volumes (or average flow rate).
b. Logarithmically transform EMC and flow volume (or average flow rate) and then conduct a linear regression between EMC and event flow volumes (or average flow rate).
c. Of the two regressions (non-transformed and log-transformed), choose the one with the higher correlation.
d. If the chosen regression is statistically significant, use it to determine concentrations for periods when sampling was not conducted. If the chosen regression is not statistically significant, use Method B.

<u>Method B</u> Break continuous hydrograph at the point when the EMC was sampled, and then linearly interpolate between the two EMC values to obtain an estimated EMC for the subinterval:

a. Create subintervals between two subsequent EMC values. Start of the subinterval is the end of EMC(n); end of the subinterval is the beginning of EMC(n+1).
b. Linearly interpolate between the two EMC values to estimate concentration(s) for the subinterval.

(4) Calculate pollutant mass for each subinterval as:
Pollutant Mass = [Flow volume] * [EMC] or use estimated EMC.
(5) Subtract pollutant load due to baseflow from each subinterval mass.
(6) Calculate wet and dry season storm runoff loads as:
Wet Season Load = Sum of mass intervals within the wet season
Dry Season Load = Sum of mass intervals within the dry season
(7) Calculate annual storm runoff load as:
Annual Load = Wet Season Load + Dry Season Load

Other water quality monitoring data collected from the project monitoring station will be reported in the Annual Report (per Permit §S8.H.2). Additionally, other non-permit required stormwater monitoring conducted during the reporting period will be described in the Annual Report (per Permit §S8.H.2).

14.0 DATA REVIEW VERIFICATION AND VALIDATION

This section addresses data review, verification, and validation activities that occur after the data collection phases are complete. Implementation of these procedures determines whether the data conform to the specified criteria, thus satisfying the program objectives.

14.1 DATA REVIEW, VERIFICATION, AND VALIDATION SUMMARY

Five types of data will be generated for this program: rainfall, flow, water quality (stormwater and baseflow), sediment quality, and stormwater toxicity. Data review involves examination of the data for errors or omissions. Data verification is the systematic process that involves examination of the QC results for compliance with acceptance criteria. Data validation involves the examination of the complete data package to determine whether the procedures in the QAPP were followed.

All data obtained from field and laboratory measurements will be reviewed and verified for conformance to project requirements, and then validated against the data quality objectives that are listed in Section 0. Only those data that are supported by appropriate quality control data and meet the measurement performance specification defined for this program will be considered acceptable and used in the project. The data review, verification, and validation procedures for each data type are discussed below.

Verification and validation procedures will be based on the guidance provided by the EPA (2002) in Guidance on Environmental Data Verification and Data Validation, EPA QA/G-8. These procedures include, for example, how computer entries are compared to field data sheets, data gaps are identified, calculations are checked, raw data are examined for outliers or nonsensical readings, and so forth.

The Quality Assurance Manager is responsible for ensuring that field data are properly reviewed and verified for integrity. On a monthly basis, and after each successfully sampled storm event, the Data Manager or designee will review rainfall and flow data for gross errors such as spikes or data gaps to determine completeness of the data set. Rainfall and flow measurements will be checked by comparing the hyetograph and hydrograph. The Quality Assurance Manager will also validate that stormwater samples

were collected in accordance with criteria included in this QAPP, as described in Section 7.0.

The staff and management of the respective field, laboratory, and data management tasks are responsible for the integrity, validation, and verification of the data each task generates or handles throughout each process. The Laboratory Quality Assurance Officers are responsible for ensuring that laboratory data (water quality, sediment and toxicology) are scientifically valid, defensible, of acceptable precision and accuracy, and reviewed for integrity. The Data Manager will be responsible for ensuring that all data are properly reviewed and verified, and submitted in the required format for import into EMIS. The Quality Assurance Manager is responsible for validating a minimum of 10 percent of the data produced in each task. Finally, the Project Manager, with the concurrence of the Quality Assurance Manager, is responsible for validating that all data to be reported meet the objectives of the project and are suitable for reporting.

14.2 VERIFICATION AND VALIDATION METHODS

This section presents example methods that may be used for the data verification and validation process. The records needed for, general methods and process for completion of, and the reporting of verification and validation are discussed. Specific methods, as documented via SOPs or data reports, will be further developed as the project proceeds.

14.2.1 Data Verification Inputs

Records that may be used as inputs for the data verification process are presented in Table 26.

Table 26. Example data verification inputs

Operation	Common Records	Sources for Record Specifications
Monitoring and sample collection	Field logs, chain-of-custody (COC) forms, database of flow and rainfall records	QAPP, Standard Operating Procedures for sample collection, pre-printed COC form instructions, project electronic database
Sample receipt	COC forms from field personnel, receiver's copy of shipping bill, internal laboratory receipt forms, internal laboratory COC forms, laboratory documented temperature logs	QAPP, laboratory SOP for sample receipt, pre-printed COC instructions

Operation	Common Records	Sources for Record Specifications
Sample preparation	Analytical services requests, internal laboratory receipt forms, internal laboratory COC forms, laboratory refrigerator or freezer logs, preparation logs or bench notes, manufacturer's certificates for standards or solutions	QAPP, reference method, laboratory SOP for analysis method, pre-printed instructions on internal forms and worksheets
Sample analysis	Analytical services requests, internal laboratory receipt forms, internal laboratory COC forms, laboratory refrigerator or freezer logs, manufacturer's certifications for standards or solutions, instrument logs or bench notes, instrument readouts (raw data), calculation worksheets, quality control (QC) results, analytical reports from the lab to the client.	QAPP, reference method, laboratory SOP for analysis method, pre-printed instructions on internal forms and worksheets
Records review	Internal laboratory checklists	QAPP, laboratory SOP for analysis method or laboratory QA Plan

Source: US EPA 2002

14.2.2 Data Verification Implementation Methods

Following are expected data verification methods to be used by the Quality Assurance Manager. Additional verification methods may be developed as the project progresses. A checklist of what verification was completed and when it was completed should be systematically documented throughout the project.

<u>Rainfall and flow records</u>

- Identify data gaps and determine if the gaps can be filled with estimated or alternate data. Document the process for filling in data gaps.
- Identify data anomalies or spikes. Are certain data outside the limits of reality? Document the process for dealing with data anomalies. For example, data were deleted or interpolated across.

- Cross check data sets against field sheets and calibration records. Determine if data set needs to be adjusted based on, for example, instrument calibration or field staff observations.
- Expected patterns/yield for that basin/area – based on previous project or historic data. Comparison of hyetograph to the hydrograph – is there a flow response to rainfall?

Analytical (water and sediment quality) results

- Determine if maximum holding times were exceeded (for each parameter).
- Completeness and missing data: Do the analytical results match what the field sheets and COCs have listed for samples collected?
- Correct analytical method used by laboratory?
- Correct detection limit achieved by laboratory?
- Matrix spike recovery within laboratory's limits?
- Laboratory duplicate within laboratory's limits?
- Expected trends: Is the result realistic for each individual parameter? Is the data point an outlier when compared to existing project data?

14.2.3 Data Verification Outputs

There are two general outputs of from the data verification process:

(1) The verified data, and

(2) Data verification records.

The verified data are the final data sets that will proceed on to the Data Usability Assessment, as described in Section 15.0. These data sets will be in the format as described in Section 11.0. Data verification records will list the date when the Quality Assurance Manager has completed the verification process, indicate the methods used, and discuss relevant data issues. Data verification records could be included in, for example, the Status Reports to Management or the Data QA/QC report section of the Annual Stormwater Monitoring Report, as described in Section 13.3.

Any changes to the results as originally reported by the laboratory or by continuously recorded electronic data (e.g., flow or rainfall) should either be accompanied by a note of explanation from the data verifier or the laboratory, indicated by an appropriate flag, or reflected in a revised laboratory data report. Data verification records can also include a narrative that identifies technical non-compliance issues or shortcomings of the data produced during the field or laboratory activities.

15.0 DATA QUALITY (USABILITY) ASSESSMENT

Data Quality Assessment (DQA) is completed after data verification and validation is done. If the Data Quality Objectives stated in this QAPP are met, then the data will be useable in meeting project objectives. If the Data Quality Objectives stated in this QAPP are not met, a determination must be made of whether the quantity and quality of the data are sufficient to meet project objectives. Anomalies in the data set will be identified and assessed, and their impact on meeting project objectives will be discussed in the pertinent Stormwater Monitoring Report.

The main goals of the DQA will be to determine if the resulting project data set:

(1) Meets the quantity of samples required by the Phase I Permit (per Permit S8.D.2) to be collected, as described in Section 7.6,
(2) Is representative of stormwater runoff conditions in the selected municipal drainage basin,
(3) Includes sample results that have met storm event and sample criteria, as required by the Phase I Permit, and
(4) Is sufficient to calculate the wet season and dry season pollutant loads, as described in Section 13.3.3.

Table 27. Example DQA table

Number of Qualifying Storm Events in Water Year 20XX	Number of Storm Event Samples Attempted		Number of Storm Event Samples that Pass DQA		Percent of Required Samples Collected for Water Year 20XX
	Wet Season	Dry Season	Wet Season	Dry Season	

16.0 REFERENCES

Analytical Resources, Inc. 2008. Laboratory Quality Assurance Plan. Version 12-010, January 4, 2008. (http://www.arilabs.com/portal/frontpage/Itemid,1/).

Canaria, E.C., J.R. Elphick, and H.C. Bailey, 1999. A Simplified Procedure for Conducting Small Scale Short-Term Embryo Toxicity Tests with Salmonids. Env. Toxicol. 14, 301-307.

City of Seattle 2000. Stormwater Treatment Technical Requirements Manual. Title 22.800 Stormwater, Grading and Drainage Control. Volume 4, November 2000.

Ecology 2005. Laboratory Guidance and Whole Effluent Toxicity Test Review Criteria. Publication No. WQ-R-95-80.

Ecology 2006. Standard Operating Procedures for Micro-Acetonitrile Back Extraction Clean-up of Fish Tissue. Version 1.0, 2006. Washington State Department of Ecology Manchester Environmental Laboratory.

Ecology 2007a. Phase I Municipal Stormwater Permit, National Pollutant Discharge Elimination System and State Waster Discharge Permit for Discharges from Large and Medium Separate Storm Sewer Systems. Washington State Department of Ecology. Olympia, Washington. Issuance Date January 17, 2007.

Ecology 2007b. Phase I Monitoring Meeting Notes, Stormwater Characterization Monitoring. July 12, 2007. Washington State Department of Ecology HQ, Lacey, Washington.

Ecology 2007c. Follow-up Monitoring Questions and Answers, Final October 2, 2007, issued by the Washington State Department of Ecology to NPDES Phase I Municipal Permitees.

Ecology 2008. Alternative Laboratory Methods Approved by Ecology for Use Under the Phase I Municipal Stormwater Permit. Washington State Department of Ecology. Lacey, Washington.

Environment Canada 1998. Biological Test Method: Toxicity Tests Using Early Life Stages of Salmonid Fish (Rainbow Trout). Environmental Protection Series 1/RM/28 Second Ed.

MGS Engineering 2003. Analysis of Precipitation-Frequency and Storm Characteristics for the City of Seattle.

Myers, D.N. and Sylvester, M.A., 1997. National Field Manual for the Collection of Water-Quality Data—Fecal Indicator Bacteria: U.S. Geological Society Techniques of Water-Resources Investigations. Book 9, Chapter A7, Section 7.1.

Nautilus Environmental, LLC 2007. Quality Assurance Manual. Second Ed. July 2007.

Nobeltec Corporation. Tides & Currents Pro. Version 3.0i, 1993-2001.

Norton, D., 1998. 1998 Sediment Trap Monitoring of Suspended Particulates in Stormwater Discharges to Thea Foss Waterway. Washington Department of Ecology, Olympia, Washington. Publication No. 98-366.

Puget Sound Water Quality Action Team 1997. Recommended Guidelines for Sampling Marine Sediment, Water Column and Tissue in Puget Sound. April 1997.

Soil Conservation Service 1986. Technical Release 55, Urban Hydrology for Small Watersheds. Publication 210-VI-TR-55, Second Ed., June 1986.

US EPA 1990. Specifications and Guidance for Obtaining Contaminant-Free Sample Containers. OSWER Directive #93240.0-05.

US EPA 1996. Environmental Protection Agency. Method 1669, Sampling Ambient Water for Trace Metals at EPA Water Quality Criteria Levels.

US EPA 1996. SW-846, Method 3500B, Organic Extraction and Sample Preparation.

US EPA 2002. Guidance on Environmental Data Verification and Data Validation. EPA QA/G-8, 2002.

USGS 1995. U.S. Geological Survey, EPA Extraction and Lipid Separation of Fish Samples for Contaminant Analysis and Lipid Determination. Standard Operating Procedure # HC521A. Great Lakes Science Center, Ann Arbor, Michigan. Version 1, 1995.

Washington State Department of Health 2006. Human Health Evaluation of Contaminants in Puget Sound Fish.

Wilson, C. and D. Norton, 1996. Stormwater Sediment Trap Pilot Study. Washington State Department of Ecology, Olympia, Washington. Publication No. 96-347.

APPENDIX A: DATES, TIMES AND DURATION OF TIDES ABOVE STRUCTURE 5482 OUTLET INVERT ELEVATION: MARCH 2009 – MARCH 2010

Dates, Times and Duration of Tides above Structure 5482 Outlet Invert Elevation March 2009 - March 2010			
Date	**Start**	**Stop**	**Total Time**
10-Mar-09	4:03	5:03	1:00
11-Mar-09	4:33	5:30	0:57
25-May-09	7:04	8:25	1:21
26-May-09	7:39	9:28	1:49
27-May-09	8:25	10:19	1:54
28-May-09	9:16	11:04	1:48
29-May-09	10:12	11:42	1:30
30-May-09	11:11	12:11	1:00
22-Jun-09	6:17	7:23	1:06
23-Jun-09	6:32	8:34	2:02
24-Jun-09	7:05	9:23	2:18
25-Jun-09	7:44	10:04	2:20
26-Jun-09	8:27	10:39	2:12
27-Jun-09	9:15	11:07	1:52
28-Jun-09	10:15	11:26	1:11
21-Jul-09	5:56	6:57	1:01
22-Jul-09	6:10	7:56	1:46
23-Jul-09	6:38	8:36	1:58
24-Jul-09	7:14	9:08	1:54
25-Jul-09	7:56	9:34	1:38
21-Aug-09	6:22	7:15	0:53
2-Dec-09	5:06	6:14	1:08
3-Dec-09	5:18	7:32	2:14
4-Dec-09	5:51	8:28	2:37
5-Dec-09	6:32	9:16	2:44
6-Dec-09	7:17	9:58	2:41
7-Dec-09	8:04	10:36	2:32
8-Dec-09	8:55	11:10	2:15
9-Dec-09	9:49	11:40	1:51
10-Dec-09	10:52	12:01	1:09
16-Dec-09	5:14	6:45	1:31
17-Dec-09	5:40	7:29	1:49
18-Dec-09	6:11	8:06	1:55
19-Dec-09	6:45	8:34	1:49
20-Dec-09	7:21	8:58	1:37
21-Dec-09	8:03	9:15	1:12
31-Dec-09	4:28	6:37	2:09
1-Jan-10	4:42	7:34	2:52
2-Jan-10	5:11	8:17	3:06
3-Jan-10	5:46	8:54	3:08
4-Jan-10	6:24	9:28	3:04
5-Jan-10	7:05	9:59	2:54
6-Jan-10	7:52	10:27	2:35

Dates, Times and Duration of Tides above Structure 5482 Outlet Invert Elevation March 2009 - March 2010			
Date	**Start**	**Stop**	**Total Time**
7-Jan-10	8:50	10:48	1:58
15-Jan-10	5:33	6:41	1:08
16-Jan-10	5:55	7:08	1:13
17-Jan-10	6:19	7:29	1:10
18-Jan-10	6:46	7:45	0:59
29-Jan-10	3:58	6:04	2:06
30-Jan-10	4:17	6:50	2:33
31-Jan-10	4:43	7:27	2:44
1-Feb-10	5:15	8:00	2:45
2-Feb-10	5:50	8:29	2:39
3-Feb-10	6:32	8:54	2:22
4-Feb-10	7:27	9:12	1:45
27-Feb-10	3:42	4:50	1:08
28-Feb-10	3:55	5:38	1:43
1-Mar-10	4:20	6:14	1:54
		Total Days:	58
		Average Duration:	1:54
		Minimum Duration:	0:53
		Maximum Duration:	3:08

APPENDIX B: TIME OF CONCENTRATION OUTPUT TABLES AND ESTIMATED PEAK FLOWS AND VOLUMES FOR STORMWATER DRAINAGE BASIN 6057

Time of Concentration Calculation

Time of concentration calcualtion for Subbasin 6057 - Shilshole Bay Marina - Port of Seattle
Drainage basin is nearly all parking lot. Catch basins for collection, and 8" trunkline.

Sheet Flow	Sheet Flow			Supporting Assumptions
n = Manning's coefficient	n =	0.011		Pavement
L = Flow length (ft) - max 300	L =	60		NE corner of basin to nearest CB (No. 4800)
P = 2-yr, 24-hr rainfall (in)	P =	1.68		from City of Seattle Manual
S = Slope (ft/ft)	S =	0.008		0.5 ft of drop over 60 feet
Ts = ((0.42(nL)^0.8)/(P^0.5*S^0.4))	**Ts =**	**1.6**	**minutes**	

Shallow Concentrated Flow	Shallow Concentrated Flow			
L = Flow length (ft)	L =	0		No shallow flow
k = roughness coefficient	k =	20		All runoff quickly reaches catch basins
S = Slope (ft/ft)	S =	0.01		
V = Velocity (ft/s) = k(S)^(1/2)	V =	2.0		
Tsc = L/60V	**Tsc =**	**0.00**	**minutes**	

Channel/Pipe Flow	Pipe Flow			
n = Manning's coefficient	n =	0.024		
S = Slope of flow path (ft/ft)	S =	0.005		Old corrugated pipe
R = area/perimeter	R =	0.17		1.5 ft drop over 275 feet
L = Flow length (ft)	L =	275		8" pipe flowing full; A = 0.35 sf; WP = 2.1 ft
V = Velocity = (1.49/n)R^(2/3)(S^(1/2)	V =	1.3		80+100+75+20
Tp = L/60V	**Tp =**	**3.4**	**minutes**	

Total Time of Concentration: Tt = 5.0 min

Runoff Calculation - Hydrograph Method

6-month Storm Event, Type IA

Port of Seattle, Shilshole Bay Marina

Outfall 6057 Drainage Basin

Parking Lot Drainage - assume nearly all impervious coverage (~90%)

Using SCS Type IA storm event to calculate basic runoff rates and volumes.

I N P U T

Total Area =	**1.33**	**acres**		
	Impervious	**Pervious**		
Drainage Area =	**1.21**	**0.12**	acres	
Curve Number =	**98**	**80**		Impervious parking lot Pervious landscape islands/strip
S =	0.2	2.5		
Time of Concentration =	**5.0**	**5.0**	minutes	
Time Step =	10.0	minutes		
Total Rainfall =	**1.08**	inches	(from City of Seattle)	

O U T P U T

	Impervious	**Pervious**	**Total**	
Peak Flow, Qpeak =	0.30	0.00	**0.30**	**cfs**
Total Volume =	3,784	47	**3,831**	**cf**
	0.09	0.00	**0.09**	**ac-ft**

Runoff Calculation - Hydrograph Method

2-Year Storm Event, Type IA

Port of Seattle, Shilshole Bay Marina

Outfall 6057 Drainage Basin

Parking Lot Drainage - assume nearly all impervious coverage (~90%)

Using SCS Type IA storm event to calculate basic runoff rates and volumes.

I N P U T

Total Area =	**1.33**	**acres**		
	Impervious	**Pervious**		
Drainage Area =	**1.21**	**0.12**	acres	
Curve Number =	**98**	**80**		Impervious parking lot Pervious landscape islands/strip
S =	0.2	2.5		
Time of Concentration =	**5.0**	**5.0**	minutes	
Time Step =	10.0	minutes		
Total Rainfall =	**1.68**	inches	(from City of Seattle)	

O U T P U T

	Impervious	Pervious	Total	
Peak Flow, Qpeak =	0.50	0.01	**0.51**	**cfs**
Total Volume =	6,352	163	**6,516**	**cf**
	0.15	0.00	**0.15**	**ac-ft**

Runoff Calculation - Hydrograph Method

25-Year Storm Event, Type IA

Port of Seattle, Shilshole Bay Marina

Outfall 6057 Drainage Basin

Parking Lot Drainage - assume nearly all impervious coverage (~90%)

Using SCS Type IA storm event to calculate basic runoff rates and volumes.

I N P U T

Total Area =	**1.33**	**acres**		
	Impervious	**Pervious**		
Drainage Area =	**1.21**	**0.12**	acres	
Curve Number =	**98**	**80**		Impervious parking lot Pervious landscape islands/strip
S =	0.2	2.5		
Time of Concentration =	**5.0**	**5.0**	minutes	
Time Step =	10.0	minutes		
Total Rainfall =	**3.13**	inches	(from City of Seattle)	

O U T P U T

	Impervious	**Pervious**	**Total**	
Peak Flow, Qpeak =	0.98	0.04	**1.02**	**cfs**
Total Volume =	12,609	582	**13,191**	**cf**
	0.29	0.01	**0.30**	**ac-ft**

Runoff Calculation - Hydrograph Method

100-Year Storm Event, Type IA

Port of Seattle, Shilshole Bay Marina

Outfall 6057 Drainage Basin

Parking Lot Drainage - assume nearly all impervious coverage (~90%)

Using SCS Type IA storm event to calculate basic runoff rates and volumes.

I N P U T

Total Area =	**1.33**	**acres**		
	Impervious	**Pervious**		
Drainage Area =	**1.21**	**0.12**	acres	
Curve Number =	**98**	**80**		Impervious parking lot Pervious landscape islands/strip
S =	0.2	2.5		
Time of Concentration =	**5.0**	**5.0**	minutes	
Time Step =	10.0	minutes		
Total Rainfall =	**3.84**	inches	(from City of Seattle)	

O U T P U T

	Impervious	**Pervious**	**Total**	
Peak Flow, Qpeak =	1.21	0.06	**1.27**	**cfs**
Total Volume =	15,717	827	**16,544**	**cf**
	0.36	0.02	**0.38**	**ac-ft**

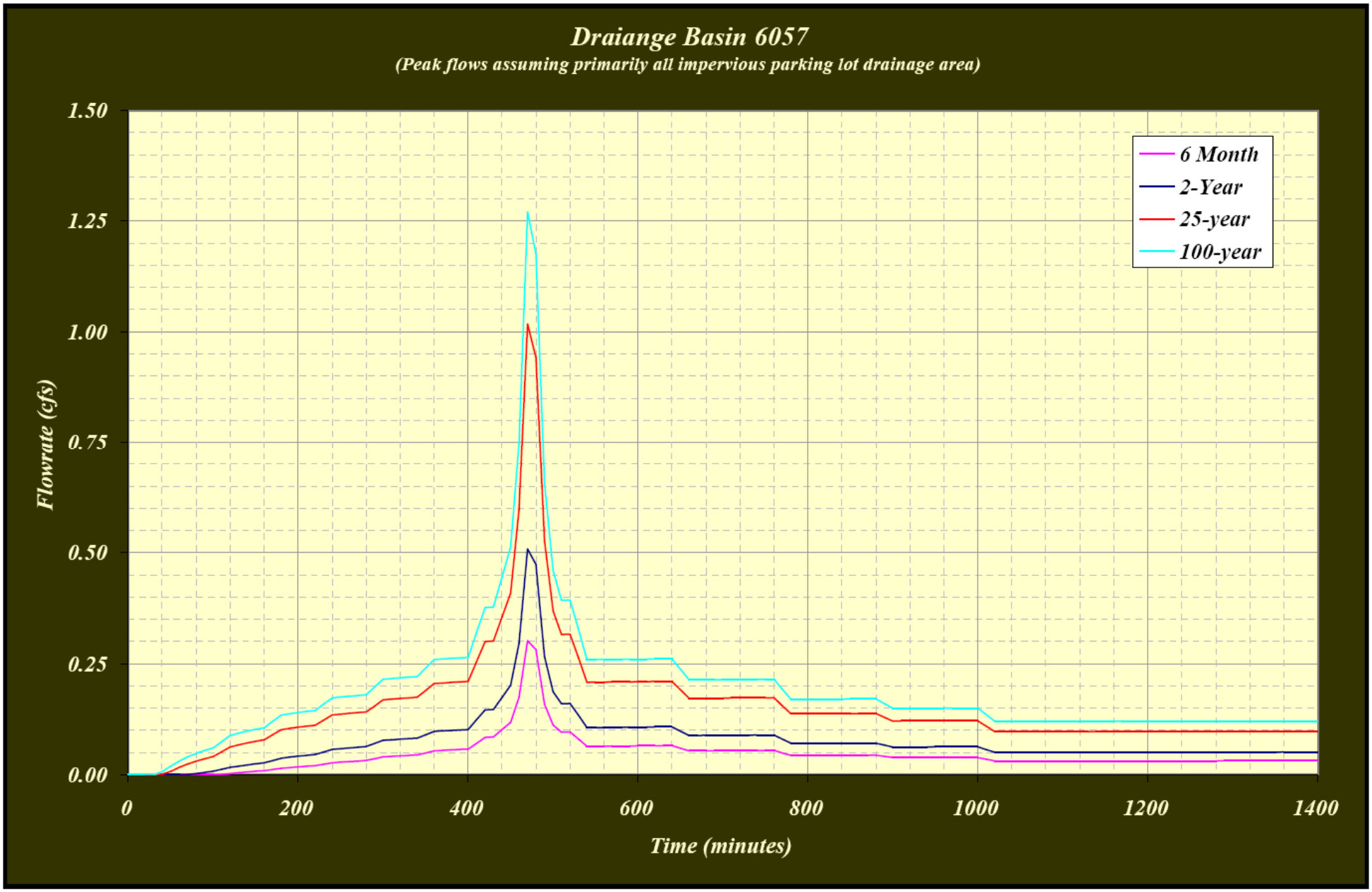
Draiange Basin 6057
(Peak flows assuming primarily all impervious parking lot drainage area)
1.50
1.25
1.00
0.75
0.50
0.25
0.00
Flowrate (cfs)
0
200
400
600
800
1000
1200
1400
Time (minutes)
6 Month
2-Year
25-year
100-year

APPENDIX C: FIELD DATA SHEETS AND COC FORMS

Port of Seattle - Seaport Phase I Stormwater Monitoring **Consultant**

Station:

Page:___of___
pages per station

Section 1. Storm setup and Inspection			
Personnel:	Weather:	Arrival Date/Time:	
Carry-over maintenance to do prior to set-up:			done?
Channel Condition OK, Observations (oil/sheen, floatables, turbidity, suspended solids, discoloration, odor…)?			
Battery Voltage		Changed? **Y** **N**	New voltage
Flow Meter/ Data Logger		**Sampler Data**	
Logger Desiccant Canisters OK? (Y/N)		Sample Tubing & Strainer OK?	
Flow Meter Desiccant OK? (Y/N)		Time Display OK? (Yes/No)	
Flowmeter Cable Secure?		Internal Sampler Tubing OK?	
Flow Tube OK? (Free of debris)		Tubing Replaced? (Yes/No)	
Flow Meter Level (ft)		Sampler Calibrated? (Yes/No)	
Estimated Water Level in Manhole (ft)		Backflushed with DI?	
Flow Rate		Suction line & quick connect attached?	
Flow Data Downloaded & Reviewed? (Y/N)		Lids off bottles?	
Enable level re-set? (Y/N) / Enable level:		Ice Deployed?	
Pacing re-set? (Y/N) / Pacing (gal.):		Distrubutor arm check?	
Time enable? (Y/N) / start time? Interval?		Program Used:	
Sampler Enable Latch Re-set? (Needs to be)		Program Reviewed (Yes/No)	
Notes:		Start Program, Last screen…	

Section 2. Grab Sample Collection/ Initial Station Check			
Personnel:	Weather:	Arrival Date/Time:	
Grab Sample Data		**Notes:**	
Runoff Present?			
Grab Collection Time (date/time)			
Grab Sample Volume Collected			
Grab Sample Bottle ID			
Grab Duplicates Collected?			
Grab Blank Collected?			
Sample Observations-notify storm controller if sample turbidity, TSS, odor, color, foam, or sheen look out of the ordinary:			
Storm Contoller notified (Y or N/A)?:			
Flow Meter/ Data Logger			
Channel Condition OK, Observations (oil/sheen, floatables, turbidity, suspended solids, discoloration, odor…)?			
Battery Voltage		Changed? **Y** **N**	New voltage
Flow Tube OK? (Free of debris)		Flow Data Downloaded & Reviewed? (Y/N)	
Sampler Data			
Equipment running correctly?		Comp sample volume OK?	
Ice OK?		Sample Observations-notify storm controller if sample turbidity, TSS, odor, color, foam, or sheen look out of the ordinary:	
Sample Tubing & Strainer OK?			
On Composite... (Bottle #/ Aliq #)			
Need to swap base? (If Y, complete next fields)		Storm Controler Notified? (Y/N)	
Sampler Report Downloaded & Reviewed?		**Sampler Reset**	
Composite Begin Time (date/time)		Lids off new bottles?	
Last Aliquot Taken (date/time, bott #, aliq #)		Distrubutor arm check?	
Aliquots missed/NLD (date/time/bott #/aliq #)		Program Used:	
		Program Reviewed (Yes/No)	
Comp Bottles Labeled? (Sta. & date)		Start Program, Last screen…	

**********No more than 1 visit worth of information per section should be recorded on any one field sheet**********

Station:	**12-bottle set-up**	Page:___of___ *pages per station*

Section 3. Mid-Event Site Visit			
Personnel:	Weather:	Arrival Date/Time:	
Flow Meter/ Data Logger			
Channel Condition OK, Observations (oil/sheen, floatables, turbidity, suspended solids, discoloration, odor…)?			
Battery Voltage		Changed? **Y N**	New voltage
Flow Tube OK? (Free of debris)		Flow Data Downloaded & Reviewed? (Y/N)	
Sampler Data			
Equipment running correctly?		Comp Sample Volume Collected (%)	
Ice OK?		Sample Observations-notify storm controller if sample turbidity, TSS, odor, color, foam, or sheen look out of the ordinary:	
Sample Tubing & Strainer OK?			
On Composite... (Bottle #/ Aliq #)			
Need to swap base? (If Y, complete next fields)		Storm Controler Notified? (Y/N)	
Sampler Report Downloaded & Reviewed?		**Sampler Reset**	
Composite Begin Time (date/time)		Lids off new bottles?	
Last Aliquot Taken (date/time, bott #, aliq #)		Distrubutor arm check?	
Aliquots missed/NLD (date/time/bott #/aliq #)		Program Used:	
		Program Reviewed (Yes/No)	
Comp Bottles Labeled? (Sta. & date)		Start Program, Last screen…	
Notes:			

Section 4. Mid-Event Site Visit			
Personnel:	Weather:	Arrival Date/Time:	
Flow Meter/ Data Logger			
Channel Condition OK, Observations (oil/sheen, floatables, turbidity, suspended solids, discoloration, odor…)?			
Sampler Battery Voltage		Changed? **Y N**	New voltage
Flow Tube OK? (Free of debris)		Flowmeter Data Downloaded & Reviewed? (Y/N)	
Sampler Data			
Equipment running correctly?		Comp Sample Volume Collected (%)	
Ice OK?		Sample Observations-notify storm controller if sample turbidity, TSS, odor, color, foam, or sheen look out of the ordinary:	
Sample Tubing & Strainer OK?			
On Composite... (Bottle #/ Aliq #)			
Need to swap base? (If Y, complete next fields)		Storm Controler Notified? (Y/N)	
Sampler Report Downloaded & Reviewed?		**Sampler Reset**	
Composite Begin Time (date/time)		Lids off new bottles?	
Last Aliquot Taken (date/time, bott #, aliq #)		Distrubutor arm check?	
Aliquots missed/NLD (date/time/bott #/aliq #)		Program Used:	
		Program Reviewed (Yes/No)	
Comp Bottles Labeled? (Sta. & date)		Start Program, Last screen…	
Notes:			

Section 5. Sample Collection/Post Storm			
Personnel:	Weather:	Arrival Date/Time:	
Flow Data Downloaded and Reviewed?			
Composite Begin Time (date/time)			
Last Aliquot Taken (date/time, bott #, aliq #)			
Comp Bottles Labeled? (Sta. & date)			
Comp Sample Volume Collected			
Aliquots missed/NLD (date/time/bott #/aliq #)			
Channel Condition OK, Observations (oil/sheen, floatables, turbidity, suspended solids, discoloration, odor…)?			
Sample Observations-notify storm controller if sample turbidity, TSS, odor, color, foam, or sheen look out of the ordinary:			
Storm Contoller notified (Y or N/A)?:	Which parameter?:		
Notes:			
Maintenance Needed:			
Rinsate Blank Taken? (Y/N)		Date/Time of Rinsate Blank	

**********No more than 1 visit worth of information per section should be recorded on any one field sheet**********

SITE VISIT LOG

Staff:	Date:	check sampler status	storm set up	storm stand down	battery check	battery replaced	sampler desiccant replaced	pump tubing replaced	sampler calibrated	data logger desiccant replaced	flowmeter desiccant replaced	sample collected	teflon tubing replaced	equipment cleaned	housing cleaned	equipment changed/ removed	Observations:

Port of Seattle - Seaport Phase I Stormwater Monitoring
Sediment Trap Deployment

Consultant

Page:___of___

Personnel:	Weather:

Date:

Station	Arrival Time	Sediment trap housing/ bracket ok?	Sediment trap bottle deployed and secure?	Funnel deployed and secure?	Screen deployed and secure?	Housing bottom cap secured?	Notes

Notes

Port of Seattle - Seaport Phase I Stormwater Monitoring
Sediment Trap Inspection and Retrieval

Consultant

Page:___of___

Personnel:	Weather:

Date:

Sediment Trap Inspection

Station	Arrival time	Sediment trap housing/ bracket ok?	Debris at trap opening? If so, remove	Trap bottle condition ok?	Sediment trap percent filled?	Sedment trap retrieved? (if yes fill in retreival section below)	Sediment trap redeployed and secured?	Funnel in place and secure?	Screen in place and secure?	Housing bottom cap secured?	Notes

Sediment Trap Retrieval

Station	Time of retrieval	Sample ID	Sample placed in cooler on ice?	New trap deployed? (if yes complete deployment form)	Notes

Chain of Custody Record & Laboratory Analysis Request

Port of Seattle - Seaport Phase I Stormwater Monitoring

Analytical Resources, Incorporated
Analytical Chemists and Consultants
4611 South 134th Place, Suite 100
Tukwila, WA 98168
206-695-6200 206-695-6201 (fax)

ARI Assigned Number:	Turn-around Requested:	Date:	
ARI Client Company:	Phone:	Page:	of
Client Contact:		No. of Coolers:	Cooler Temps:
Client Project Name:			
Client Project #:	Samplers:		

Sample ID	Date	Time	Matrix	No. Containers	Analysis Requested								Notes/Comments

Comments/Special Instructions	Relinqushed by: (Signature)	Received by: (Signature)	Relinquished by: (Signature)	Received by: (Signature)
	Printed Name:	Printed Name:	Printed Name:	Printed Name:
	Company:	Company:	Company:	Company:
	Date & Time:	Date & Time:	Date & Time:	Date & Time:

Limits of Liability: *ARI will perform all requested services in accordance with appropriate methodology following ARI Standard Operating Procedures and the ARI Quality Assurance Program. This program meets standards for the industry. The total liability of ARI, its officers, agents, employees, or successors, arising out of or in connection with the requested services, shall not exceed the Invoiced amount for said services. The acceptance by the client of a proposal for services by ARI release ARI from any liability in excess thereof, not withstanding any provision to the contrary in any contract, purchase order or co-signed agreement between ARI and the Client.*

Sample Retention Policy: Unless specified by workorder or contract, all water/soil samples submitted to ARI will be discarded or returned, no sooner than 90 days after receipt or 60 days after submission of hardcopy data, whichever is longer. Sediment samples submitted under PSDDA/PSEP/SMS protocol will be stored frozen for up to one year and then discarded.

Nautilus Environmental, LLC

☐ CALIFORNIA
5550 Morehouse Drive • Suite 150
San Diego, California 92121
Phone 858.587.7333
Fax 858.587.3961

☐ WASHINGTON
5009 Pacific Highway East • Suite 2
Tacoma, Washington 98424
Phone 253.922.4296
Fax 253.922.5814

Chain of Custody

Date _____ Page _____ of _____

Sample Collection by: _____

Report to:
Company _____
Address _____
City _____ State _____ Zip _____
Contact _____
Phone No. _____

Invoice to:
Company _____
Address _____
City _____ State _____ Zip _____
Contact _____
Phone No. _____

ANALYSES REQUIRED

SAMPLE ID	DATE	TIME	MATRIX	CONTAINER TYPE	NUMBER OF CONTAINERS	COMMENTS												RECEIPT TEMPERATURE (°C)

PROJECT INFORMATION	SAMPLE RECEIPT	
CLIENT	TOTAL NO. OF CONTAINERS	
P.O. NO.	REC'D GOOD CONDITION	
SHIPPED VIA:	MATCHES TEST SCHEDULE	

SPECIAL INSTRUCTIONS/COMMENTS:

RELINQUISHED BY (CLIENT)	RELINQUISHED BY (COURIER)
(Signature) (Time)	(Signature) (Time)
(Printed Name) (Date)	(Printed Name) (Date)
(Company)	(Company)
RECEIVED BY (COURIER)	**RECEIVED BY (LABORATORY)**
(Signature) (Time)	(Signature) (Time)
(Printed Name) (Date)	(Printed Name) (Date)
(Company)	**Nautilus Environmental Log-in No.**

Additional costs may be required for sample disposal or storage. Net 30 unless otherwise contracted.

DISTRIBUTION: WHITE - Nautilus Environmental, COLOR - Originator

APPENDIX D: ANALYTICAL STANDARD OPERATING PROCEDURES

Analytical Resources Incorporated
Analytical Chemists and Consultants

Standard Operating Procedures

SOP	TITLE	Current Version
	Sample Receiving / Project Management	
001S	Sample Receiving	021
003S	Project Tracking	006
004S	Data Storage, Archival and Retrieval	007
005S	Project Management	004
056S	Handling of USDA Regulated Soil	001
	Computer Services	
101S	Software Quality Assurance (Draft)	003
	Data Reporting	
201S	GC-Data Reporting and Review	006
202S	GC-MS Data Reporting and Review	004
203S	Volatile Organics Data Reporting and Review	004
204S	GC BETX Data Reporting and Review	004
205S	Conventionals Data Review and Reporting	003
	Organic Extractions	
300S	Sonicator Function Testing	008
301S	Organics Glassware Preparation	010
302S	Silica Gel Clean-up for Pesticides and PCB	002
303S	Tissue Extraction – Pesticide/PCB	001
304S	Soil Extraction – NWTPH-D, AK102, AK103 MicroTip Sonication	015
305S	BAN Extraction – Water – Separatory Funnel	016
306S	Gel Permeation Chromatography	003
308S	Water Extraction – NWTPH-D, AK102, AK103	015
311S	Pesticide/PCB Extraction – Water – Sep Funnel	020
315S	Butyl Tin Extraction – Soil/Sediment – Sonication	008
316S	Butyl Tin Extraction – Pore Water – Separatory Funnel	013
320S	Butyl Tin Species – Sediment – *in-situ* Ethylation	001
324S	Herbicide Extraction – Water – Separatory Funnel	013
325S	Herbicides Extraction – Soil – Macro-tip	010
326S	Extraction of Water for Organophosphorus Pesticides	009
327S	Extraction of Soil for Organophosphorus Pesticides	007
328S	Chlorinated Phenols – Water – Separatory Funnel	013
332S	PCB Extraction – Wipe Samples	009
333S	PCB Extraction – Soil - Medium Level	010
334S	Sulfur Removal from Sample Extracts	007
335S	Sulfuric Acid Clean-up of Sample Extracts	009

Analytical Resources Incorporated
Analytical Chemists and Consultants

Standard Operating Procedures

SOP	TITLE	Current Version
336S	Low Level Manchester Extraction for Pesticides and PCBs	014
340S	BAN Extraction – Tissue – Tissuemizer	009
341S	SIM-PNA Extraction – Water – Liquid Liquid	003
342S	Extraction of Soil Samples for NWTPH-HCID	009
344S	BAN Extraction – Water – Liquid-Liquid	012
349S	Paint Filter Liquids Test	006
350S	Pest/PCB Extraction – PSEP/PSDDA – Macro-tip	009
357S	PNA Extraction – Soil – Micro-tip	002
359S	Sample Screening for PCB/ABN/PNA/PNA-SIM	006
360S	Extractions Opening/Closing Checklist	005
367S	Chlorinated Phenols – Soil	003
374S	BAN Extraction – PSEP/PSDDA – Macro-tip	004
377S	BAN Extraction – Soil	003
398S	EPH Extraction/Fractionation – Soil	004
399S	EPH Extraction/Fractionation – Water	005
	Gas Chromatography	
400S	GC Analysis and General Operations	009
403S	PCB Analysis – EPA Method 8082	017
404S	Gasoline Range Organics, Methods NWTPH-G & AK101	011
405S	Herbicides Analysis – EPA Method 8151	009
407S	Diesel Range Organics (DRO) and Residual Range Organics (RRO) Methods NWTPH-D, AK102 & AK103	010
409S	Hydrocarbon Identification (NWTPH-HCID)	006
410S	BTEX Analysis by GC-PID – EPA Method 8021	010
412S	Chlorinated Phenols – EPA Method 8040	003
423S	Pesticides Analysis – EPA Method 8081	013
425S	PCB – Congener Analysis – GC-ECD	001
428S	Extractable Petroleum Hydrocarbon	005
430S	Volatile Petroleum Hydrocarbons	003
	Metals Sample Preparation and Analyses	
500S	Metals Glassware Prep.	003
502S	Varian 300Z Graphite Furnace Analysis	008
505S	Metals Sample Prep. Method 3020A (TWN)	009
506S	Metals Sample Prep. Methods 7060A/7740 (RMA)	008
507S	Metals Sample Prep. Method 3050B (SWC)	008
508S	Metals Sample Prep. Method 3005A (RWC)	008

Analytical Resources Incorporated
Analytical Chemists and Consultants

Standard Operating Procedures

SOP	TITLE	Current Version
509S	Metals Sample Prep. Method 3050B (SWN)	008
510S	Metals Sample Prep. Method 3010A (TWC)	009
511S	Metals Sample Prep. Method 7471 (SMM)	007
514S	Metals Sample Prep. Filter/Wipe (PHN,PNM)	001
525S	Metals Sample Prep. CLP Method 3005-M (RCC)	007
526S	Metals Standards Prep. And Maintenance	006
527S	Metals Spiking	008
529S	Percent Solids Determination	004
531S	TCLP Extraction: Method 1311	009
532S	Metals Sample Prep. Method 7471A (SWM)	004
533S	Metals Sample Prep. Method 7470A (TWM)	005
535S	Metals Sample Prep. Method 200.8 (REC)	002
536S	Metals Sample Prep. Method 200.8 (REN)	004
537S	Metals Sample Prep. Method 200.8 (RHN)	004
538S	Elan 6000 ICP-MS	006
539S	Cetac Mercury Cold Vapor Analysis	004
540S	ICP Analysis	005
	Wet Chemistry (Conventional) Analyses	
600S	Ferrous Iron	003
601S	Cyanide	010
602S	TOC – Soil and Sediment	009
603S	Acidity	003
604S	Alkalinity	004
605S	Biochemical Oxygen demand	005
606S	Bromide	002
607S	Cation Exchange Capacity	003
608S	Chlorophyll a	003
609S	Chemical Oxygen Demand	003
610S	Color (Visual Comparison) – Draft	004
611S	Conductivity – Draft	004
612S	Chloride (Automated)	003
614S	Hexavalent Chromium	006
615S	Ammonia (Automated)	005
616S	Ammonia (ISE)	004
617S	Nitrate & Nitrite+Nitrate	004
618S	pH	006

Analytical Resources Incorporated
Analytical Chemists and Consultants

Standard Operating Procedures

SOP	TITLE	Current Version
620S	Standards Preparation	003
621S	Ion Chromatography	007
623S	Fluoride	003
628S	Microbiology (Coliform)	002
631S	Phosphorus – Draft	004
632S	Dissolved Oxygen	004
633S	Phenol	006
634S	Oxidation/Reduction Potential – Draft	004
635S	Salinity	003
637S	Sulfate (Automated)	006
639S	Solids	006
640S	Sulfide	002
641S	Sulfite	003
642S	Total Kjeldahl Nitrogen	004
643S	Turbidity	002
645S	Glassware Cleaning	002
648S	Hexane Extractable Materials - EPA Method 1664	000
649S	TOC-Aqueous	002
651S	Cyanide, Finish Analysis	002
652S	Dissolved Oxygen – Membrane Electrode	002
	Volatile Organic Analyses	
700S	Volatile Organics Analysis – GC/MS	010
702S	GC/MS Volatiles – Autosampler Operation	004
703S	Volatile Organic Compounds by GC/MS SIM	007
704S	Volatile Organic Standard Preparation	003
706S	Volatile Organic Analysis – EPA Method 524.2	005
707S	TCLP/ZHE Extraction for VOA	001
710S	GC Headspace Equilib. Analysis for Methane, Ethane and Ethene	003
	Semi-Volatile Organic Analyses	
801S	PNA by GC/MS SIM	007
802S	Butyl Tin Species (GC-MS-SIM)	009
803S	Butyl Tin Species in Porewater (GC-MS-SIM)	007
804S	Semivolatile Organics by GC/MS (8270D)	012
805S	Organophosphorous Pesticides GC/MS-SIM	001
	Quality Assurance Procedures	
1000S	TCLP Extractor RPM Monitoring	004

Analytical Resources Incorporated
Analytical Chemists and Consultants

Standard Operating Procedures

SOP	TITLE	Current Version
1001S	Refrigerator and Freezer Temperature Monitoring	011
1002S	Laboratory Ethics - Draft	000
1003S	Balance Monitoring	010
1004S	Document Control	008
1005S	Quality Assessment and Corrective Action	009
1006S	Document Control–Standard Operating Procedures	005
1007S	Internal Chain of Custody-Conventionals	005
1008S	Internal Chain of Custody-Metals	005
1009S	Internal Chain of Custody-SVOA	008
1010S	Internal Chain of Custody-Volatiles	006
1012S	Standard Preparation – GC and Semivolatiles	003
1013S	Chemical Receiving and Reagent Preparation	006
1015S	Pipette Verification	002
1016S	Control Limits and Control Charts	003
1017S	Training and Demonstration of Capability	007
1018S	Determination of MDLs and RLs	007
1019S	Chain of Custody, Archival & Disposal-Org. Ext.	003
1021S	Manual Integration of Chromatographic Peaks	000
1022S	Volumetric Ware Verification	001

(1) Current Standard Operating Procedures (SOPs) based on Analytical Resources, Inc. Laboratory Quality Assurance Plan (QAP), Version 12-010, January 4, 2008.

APPENDIX E: TOXICITY TESTING STANDARD OPERATING PROCEDURES

7-d Rainbow Trout Embryo Viability Test (Early Life Stages)

I. PURPOSE

This method estimates chronic toxicity of water samples on early life stage development of *Oncorhynchus mykiss,* rainbow trout. Trout embryos are exposed to samples immediately post fertilization under static-renewal test conditions. Survival and normal development of the embryos are evaluated after seven days of exposure.

Please read this entire standard operating procedure (SOP) before conducting this test. This SOP is based on the Environment Canada Biological Test Method: Toxicity Tests Using Early Life Stages of Salmonid Species (Rainbow Trout), EPS 1/RM/28, 2nd Edition-July 1998 with modifications by Canaria, et al. For additional information on this test, please refer to that method.

II. SUMMARY OF TEST PROCEDURES

- 4 replicates per concentration
- 30 embryos per replicate
- Age of test organisms: immediately post fertilization
- 1 L test containers (With samples containing large amounts of particulate, see Environmental Canada Biological Test Method for alternative test chambers)
- 500 ml test volume
- 14 ± 1°C under dark conditions (use of dim lighting during test renewals)
- 80% daily renewal
- Highest concentration for reference toxicant: 10 mg/L SDS

III. EQUIPMENT/SUPPLIES

- Environmental room maintained at 14±1°C with a photoperiod of 24-h darkness and 4°C cold room
- Thermometer, pH meter, dissolved oxygen meter, and conductivity meter for routine physical and chemical measurements
- Test chambers: Clean (refer to in-house cleaning practices) HDPE 1 L plastic containers. (Test volume is determined by both sample characteristics and biomass requirements (≥ 0.5 L/g/d). Type of vessel used is also based on sample characteristics, in particular if the sample contains excessive particulate matter a container designed to keep the

embryos off the bottom of the chamber is used (see Environment Canada method for description)).

- Clean graduated cylinders, 1 mL pipettes, plastic forks, plastic spoons, gloves, air lines, pumps and tubes, mixing vessels for dilutions, medium weigh boats, glass dish for fertilization, covers with air holes for test chambers

- Test tubes with caps and funnel small enough to fit into test tubes, but large enough to allow eggs to pass through

- Small light for test chamber to use as only light during renewals

- Soft hardness dechlorinated tap water (used as a control and dilution media).

- Unfertilized eggs and sperm obtained from established quality supplier (e.g., Troutlodge 253-863-0446; Nisqually Trout Farm 360-491-7440) and stored under dark conditions in a cold storage room at 4°C until use

- Sodium Dodecyl Sulfate (SDS) for reference toxicant testing

- Safety equipment - lab coats, eye protection, and gloves as required

- Stockards' solution or 5% acetic acid – 1 liter
  850 mL DI water
  60 mL glycerin
  50 mL Formalin
  40 mL glacial acetic acid

IV. UNIVERSAL PROCEDURE (ALL SAMPLES)

A. Gamete Collection

1. Unfertilized rainbow trout gametes (eggs and sperm) are obtained from the supplier. In estimating the number of eggs required, add an additional 15% to ensure adequate supply for all tests including the reference toxicant test. The gametes are collected and stored in cleaned plastic bags, keeping eggs and sperm separate.

2. During transport, keep gametes in a dark and cool container. Upon arrival, store the gametes under dark conditions in the 14°C environmental chamber, or hold at 4°C if overnight storage is required.

3. Complete appropriate organism receipt forms; include information such as source of gametes, number of containers of sperm and eggs, collection date and any other observations.

B. Sample Preparation

1. Upon arrival at the laboratory, open the coolers containing test samples. Inspect the samples verifying the contents match information on the chain-of-custody forms (COC). Measure and record receipt temperature on the chain-of-custody form for each sample.

2. Immediately measure standard water quality parameters (Cl_2, NH_3, pH, DO, conductivity, hardness, and alkalinity) and record the values on the sample check-in sheet. Store the samples at 4°C in the dark until used for testing.

3. Ensure that the dissolved oxygen for the sample is between 60-100% saturation. If not the sample will need to be pre-aerated in 30 minute increments (maximum 120 minutes total) at a rate 6.5±1 mL/min/L. The sample can be used for preparing concentrations once the dissolved oxygen level is within 60-100% saturation or if pre-aeration reaches a maximum of 120 minutes. The sample pH should be within 6.5-8.5. If not, the client and laboratory manager should be contacted if pH adjustment will be required.

C. Pre-test Set-up

1. All preparations for the test must be completed before fertilization of the eggs is begun because the test initiation is conducted in a dark chamber. If the gametes were stored in the 4°C room, move them to the environmental chamber to warm prior to fertilization.

2. Obtain test datasheets for all samples and the accompanying reference toxicant test, recording appropriate information from the COC form and organism receipt logs on the sheets.

3. Remove adequate volume of the sample from the 4°C room and warm it up in warm water bath to 14±1°C.

4. Label all respective dilution vessels and sample preparation materials with the appropriate ID and test concentration for both the sample tests and reference toxicant tests.

5. Label test chambers, 4 containers per concentration. On the outside of the test chambers draw a line at the five hundred and one hundred milliliters marks. Set the test chambers out for test the in environmental chamber.

6. Prepare dilutions of the sample(s). Starting at the highest test concentration (100% v/v), transfer 2.5-L of undiluted sample into a dilution vessel. To make the remaining concentrations (50, 25, 12.5 and 6.25 % v/v), perform a 0.5 x dilution by measuring equal volumes of sample with equal volumes of dilution water (i.e., for 50% [v/v], use 2.5-L of the undiluted sample and add 2.5-L dilution water). Transfer 2.5-L of each dilution into a clean, appropriately labeled container. Place 2.5-L of dilution water in a clean vessel labeled "control". Distribute 500 mL of each concentration, including the control, into the prepared test chambers.

7. Prepare the test solution for the reference toxicant test. The highest concentration, 10mg/L SDS, is prepared by adding 50 mg SDS to 5.0-L dilution water and stirring for 5 minutes. Transfer 2.5-L of this concentration to a clean, container labeled "10 mg/L". Prepare the remaining concentrations by performing a 0.5 x serial dilution using the remaining 2.5-L of 10mg/L SDS and dilution water. Place at least 2.5-L of dilution water in a clean vessel labeled "control". Distribute 500 mL to the prepared test chambers.

8. Measure water quality parameters (pH, DO, temperature and conductivity) on all test concentrations and record values on the datasheets.

9. Label 4 weigh boats for each test concentration with the concentration. Fill each with approximately 15-mL (about 1/3 full) of the appropriate sample concentration and set aside in environmental chamber.

10. Prepare pipets used in aeration of test. The pipets are used with flexible airlines to aerate each test chamber. New 1 mL pipettes are inserted into airlines for each test period and disposed at test termination. Each pipet is wrap with tape to suspend the pipet through the chamber cover to prevent the air from disturbing the eggs during aeration. Place a piece of tape each pipette at the 4 mL mark, with one edge of the tape on the 4 mL mark and the other edge towards the 3 mL mark. Create a "tail" by sticking to two ends of the tape together. This "tail" will support the pipet.

D. Test Initiation

NOTE: FERTILIZATION IS CONDUCTED UNDER DRY CONDITIONS. DO NOT ADD WATER AND MAKE SURE THAT THE CONTAINER USED FOR FERTILIZING EGGS IS COMPLETELY DRY. ENSURE THAT THE FERTILIZING IS DONE UNDER LOW LIGHT CONDITIONS AT 14 ± 1°C.

1. Under low light conditions in the environmental chamber, remove the gametes from the storage containers.

2. Confirm sperm viability by placing a small drop of sperm on a glass slide and while viewing under a microscope, activate sperm with a drop of water. Watch for sperm motility, this will happen quickly and last for a very short time period. Note viability was confirmed on the data sheet.

3. Place eggs in a large, clean, shallow glass dish. Disperse 0.5 to 1 mL of sperm throughout the eggs. Gently mix using either a gloved-hand or a spoon. Set the fertilized eggs aside in dark chamber for 5 minutes to allow for fertilization.

4. After fertilization period, add at least 30 fertilized eggs to weigh boats containing test solutions. This must be done within 20 minutes from time of fertilization.

5. Gently rinse excess sperm from eggs by pouring liquid from the weigh boats and refilling it with the appropriate test solution. Rinse a minimum of two times. Count eggs and carefully add 30 eggs to each test container. Carefully return test chambers to shelf.

6. Cover chambers using plexiglass with airline holes. Place one pipette attached airline into each test container. Check each test chamber to ensure light aeration (approximately 3 bubbles per second). Record the initiation time (the time that the eggs were added to the weigh boats) and the number of eggs placed in each test chambers to the datasheets.

E. Daily Monitoring (days 2-7)

1. Prepare dilutions daily by following the same procedures outlined in the pre-test set-up for both the sample(s) and reference toxicant tests except only 2-L are prepared for each concentration. Bring test solutions to proper temperature, 14±1°C. Measure water quality parameters (pH, DO, temperature and conductivity) and record the values in the initial column of the water quality (WQ) data sheet.

2. All daily renewals are conducted in the environmental chamber under low light conditions. To renew a test, gently remove containers from under the covers. Remove 80% of the solution by gently decanting the overlying water. Save a composite sample from each concentration for measuring water quality parameters.

3. Remove any embryos which have turned opaque or white using a spoon, being careful not to disturb the remaining embryos. Count and record the number of remaining embryos on the embryo data sheet.

4. Gently pour the fresh test solution down the side of each test chamber to avoid disturbing the embryos, do not pour liquids directly onto the embryos. Place the containers back under the covers and ensure that aeration is being provided to each test chamber.

5. Continue this process for the entire concentration series for each of the tests, moving from the least concentrated to the most concentrated solution in each test. Measure water quality parameters (pH, DO, temperature and conductivity) from composite samples saved from step 2 and record the values in the daily final column of the WQ datasheet.

F. Test Termination (Day 7)

1. At the end of the test, embryos are transferred into test tubes and cleared with 5% acetic acid solution. Stockard's Solution is an alternative method used to clear the eggs but is a carcinogen and creates a hazardous waste and so we prefer to use acetic acid. The embryos must be scored, however, within 1 to 2 weeks because acetic acid does not preserve the embryos indefinitely and the quality deteriorates. Label test tubes with appropriate numbers. Make sufficient volume of fixative solution (5% acetic acid or Stockard's Solution) for tests. Approximately 400 mL of fixactive is required per test containing 24 test chambers. Use proper PPE for handling formaldehyde.

2. Gather fish net, waste container, funnel and wash bottle.

3. Remove the test containers from one test under low light conditions.

4. Save a composite sample from each concentration for measurement of final water quality parameters.

5. Count embryos, removing ones that are opaque, and record number on datasheet. This does not need to be completed under low light conditions.

6. Collect the eggs from each test chamber separately into the net. Add to corresponding test tube, pouring them through the funnel. Ensure that the funnel is emptied before moving to the next test chamber.

7. Continue this process until all test chambers have been transferred to test tubes. Add fixative and capping the test tubes. Stockard's solution must be added under the fume hood.

8. At the end of testing, each egg is categorized as viable or nonviable. Examine the controls first and evaluate the overall embryo quality and development for this particular batch of test organisms. Viable embryos appear to have developed normally as typical for controls in this batch of tests. Nonviable embryos include eggs that were not fertilized (having no visible embryo) or ones that have not developed as typical to control in terms of size and shape. Embryos with twins are scored as nonviable. Record the number of viable embryos and non-viable embryos on the embryo count datasheet.

9. Dispose of all test materials in accordance with local, state, and federal regulations.

V. TEST ACCEPTABILITY CRITERIA

1. Control embryo viability at test termination must be ≥70 percent.

2. Determine the 7-d EC50 and/or EC25 with accompanying 95% Confidence Limits where necessary using an appropriate statistical program (CETIS). Use probit analysis to produce these estimates and provide a printout of this estimate. Report these estimates including confidence limits on the appropriate datasheets. If applicable, calculate and report the appropriate NOEC and LOEC values. Update corresponding reference toxicant test control charting and ensure that limits have not been exceeded.

VI. HEALTH AND SAFETY

1. Health and safety precautions and applicable regulations should be considered at all times. Gloves should always be worn when handling effluents.

2. Gloves and goggles must always be worn when making Stockard's' solution. Work under fume hood when mixing solution and when filling test tubes.

VII. PERSONNEL

Only qualified technicians who have been properly trained and can demonstrate competencies with these techniques are permitted to conduct this test.

VIII. QUALITY ASSURANCE REQUIREMENTS

Quality assurance practices encompass all aspects of testing including the collection, handling, and preparation of test organisms, samples, and dilution waters. Proper record keeping is required, and concentrated efforts are made for complete documentation on a real-time basis.

IX. REFERENCE

Canaria, E.C., Elphick, J.R. and Bailey, H.C. 1999. A simplified procedure for conducting small scale short-term embryo toxicity tests with salmonids. Environ. Toxicol. 14:301-307.

Environment Canada. 1998. Biological Test Method: Toxicity Tests Using Early Life Stages of Salmonid Fish (Rainbow Trout), EPS 1/RM/28, Second Edition-July 1998.

WDOE. 2005. Laboratory Guidance and Whole Effluent Toxicity Test Review Criteria. Washington State Department of Ecology. Water Quality Program. Publication number: WQ-R-95-80, Revised June 2005.