# QUALITY ASSURANCE PROJECT PLAN

## REDMOND PAIRED WATERSHED STUDY

Prepared for
City of Redmond

Prepared by
Herrera Environmental Consultants, Inc.

**Note:**
Some pages in this document have been purposely skipped or blank pages inserted so that this document will copy correctly when duplexed.

# QUALITY ASSURANCE PROJECT PLAN

## REDMOND PAIRED WATERSHED STUDY

Prepared for
City of Redmond
15670 Northeast 85th Street
Redmond, Washington 98052

Prepared by
Herrera Environmental Consultants, Inc.
2200 Sixth Avenue, Suite 1100
Seattle, Washington 98121
Telephone: 206-441-9080

December 31, 2015

# SIGNATURE PAGE

Approved by: Date

Andy Rheaume
City Project Manager
City of Redmond

Brandi Lubliner
Regional Stormwater Monitoring Program Manager
Washington State Department of Ecology

John Lenth
Herrera Project Manager; Water Quality and Biological Monitoring Lead
Herrera Environmental Consultants, Inc.

Jenée Colton
King County Project Manager
King County

David Baumeister
Laboratory Project Manager for Water and Sediment Quality Monitoring
OnSite Environmental, Inc.

Gary Lester
Laboratory Project Manager for Biological Monitoring
EcoAnalysts, Inc.

# Distribution List

| Name | Affiliation | Project Role | Phone | E-mail |
|---|---|---|---|---|
| Andy Rheaume | City of Redmond | City Project Manager | 425-556-2741 | ajrheaume@redmond.gov |
| Brandi Lubliner | Washington State Department of Ecology | Regional Stormwater Monitoring Program Manager | 360-407-7140 | brandi.lubliner@ecy.wa.gov |
| John Lenth | Herrera Environmental Consultants, Inc. | Herrera Project Manager; Water Quality and Biological Monitoring Lead | 206-787-8265 | jlenth@herrerainc.com |
| Jenée Colton | King County | King County Project Manager | 206-477-4075 | Jenee.Colton@kingcounty.gov |
| David Funke | King County | Hydrologic Monitoring Lead | 206-477-4692 | David.Funke@kingcounty.gov |
| David Baumeister | OnSite Environmental, Inc. | Laboratory Project Manager for Water and Sediment Quality Monitoring | 425-883-3881 | DBaumeister@onsite-env.com |
| Gary Lester | EcoAnalysts, Inc. | Laboratory Project Manager for Biological Monitoring | 208-882-2588 | glester@ecoanalysts.com |
| Jerallyn Roetemeyer | City of Redmond | Technical Advisory Committee | 425-556.2820 | JRoetemeyer@redmond.gov |
| Doug Hutchinson | City of Seattle | Technical Advisory Committee | 206-233-7899 | doug.hutchinson@seattle.gov |
| Jeff Burkey | King County | Technical Advisory Committee | 206-477-4658 | jeff.burkey@kingcounty.gov |
| Kate Macneale | King County | Technical Advisory Committee | 206-477.4769 | Kate.Macneale@kingcounty.gov |
| Chris May | Kitsap County | Technical Advisory Committee | 360-337-7295 | cmay@co.kitsap.wa.us |
| Dino Marshalonis | US Environmental Protection Agency | Technical Advisory Committee | 206-553-1519 | Marshalonis.Dino@epamail.epa.gov |
| Rick Dinicola | US Geological Survey | Technical Advisory Committee | 253-552-1603 | dinicola@usgs.gov |
| Chris Konrad | US Geological Survey | Technical Advisory Committee | 253-552-1634 | cpkonrad@usgs.gov |
| Rich Sheibley | US Geological Survey | Technical Advisory Committee | 253-552-1611 | sheibley@usgs.gov |
| Karen Dinicola | Washington State Department of Ecology | Technical Advisory Committee | 360-407.6550 | karen.dinicola@ecy.wa.gov |
| Mindy Roberts | Washington State Department of Ecology | Technical Advisory Committee | 360-407-6804 | mindy.roberts@ecy.wa.gov |

# CONTENTS

Signature Page ..... i

Distribution List ..... iii

1. Introduction ..... 1

2. Background ..... 3

3. Project Description ..... 7

4. Project Organization and Schedule ..... 9

   4.1. Organization and Key Personnel ..... 9
   4.2. Schedule ..... 10

5. Quality Objectives ..... 11

   5.1. Measurement Quality Objectives for Continuous Hydrologic Data ..... 11
      5.1.1. Precision ..... 12
      5.1.2. Bias ..... 12
      5.1.3. Representativeness ..... 12
      5.1.4. Completeness ..... 12
      5.1.5. Comparability ..... 13
   5.2. Measurement Quality Objectives for Rainfall Data ..... 13
      5.2.1. Precision ..... 13
      5.2.2. Bias ..... 13
      5.2.3. Representativeness ..... 13
      5.2.4. Completeness ..... 14
      5.2.5. Comparability ..... 14
   5.3. Measurement Quality Objectives for Discrete Water and Sediment Quality Data ..... 14
      5.3.1. Precision ..... 14
      5.3.2. Bias ..... 15
      5.3.3. Representativeness ..... 18
      5.3.4. Completeness ..... 18
      5.3.5. Comparability ..... 18
   5.4. Measurement Quality Objectives for Continuous *In Situ* Water Quality Data ..... 19
      5.4.1. Precision ..... 19
      5.4.2. Bias ..... 19
      5.4.3. Representativeness ..... 19
      5.4.4. Completeness ..... 20
      5.4.5. Comparability ..... 20
   5.5. Measurement Quality Objectives for Biological Monitoring ..... 20

6. Experimental Design ..... 21
6.1. Study Watersheds ..... 22
6.1.1. Application Watersheds ..... 22
6.1.2. Reference Watersheds ..... 33
6.1.3. Control Watersheds ..... 34
6.2. Status and Trends Monitoring ..... 40
6.2.1. Hydrologic Monitoring ..... 40
6.2.2. Water Quality Monitoring ..... 48
6.2.3. Physical Habitat Monitoring ..... 49
6.2.4. Sediment Quality Monitoring ..... 51
6.2.5. Biological Monitoring ..... 52
6.3. Effectiveness Monitoring ..... 52
7. Sampling Procedures ..... 55
7.1. Safety ..... 55
7.2. Hydrologic Monitoring ..... 55
7.3. Discrete Water Quality Sampling ..... 56
7.4. Continuous Water Quality Monitoring ..... 57
7.5. Physical Habitat Monitoring ..... 58
7.6. Sediment Quality Monitoring ..... 61
7.7. Biological Monitoring ..... 61
7.8. Rainfall Monitoring ..... 62
8. Measurement Procedures ..... 63
8.1. Water and Sediment Data ..... 63
8.2. Biological Data ..... 63
9. Quality Control ..... 65
9.1. Field Quality Control Procedures ..... 65
9.1.1. Instrument Maintenance and Calibration ..... 65
9.1.2. Field Notes ..... 68
9.1.3. Field Duplicates ..... 68
9.1.4. Sample Handling ..... 68
9.1.5. Sample Identification and Labeling ..... 68
9.1.6. Sample Containers and Preservation ..... 69
9.1.7. Chain-of-Custody Record ..... 69
9.2. Laboratory Quality Control Procedures ..... 69
9.2.1. Method Blanks ..... 69
9.2.2. Control Standards ..... 69
9.2.3. Matrix Spikes ..... 69
9.2.4. Laboratory Duplicates ..... 70
10. Data Management and Documentation Procedures ..... 71
10.1. Data Management ..... 71
10.2. Documentation and Records ..... 73
10.2.1. Field Operation Records ..... 73

10.2.2. Laboratory Records ..... 73
10.2.3. Data Handling Records ..... 73
10.2.4. Revisions to the QAPP ..... 74

11. Audits and Reports ..... 75

11.1. Audits ..... 75
11.2. Reporting ..... 75

12. Data Verification and Validation ..... 77

12.1. Verification and Validation Methods for Data from Hydrologic Monitoring ..... 77
12.2. Verification and Validation Methods for Hydrologic Model Calibration ..... 77
12.3. Verification and Validation Methods for Data from Water and Sediment Quality Monitoring ..... 78
12.3.1. Completeness ..... 78
12.3.2. Methodology ..... 78
12.3.3. Holding Times ..... 79
12.3.4. Method Blanks ..... 79
12.3.5. Reporting Limits ..... 79
12.3.6. Duplicates ..... 79
12.3.7. Matrix Spikes ..... 79
12.3.8. Control Standards ..... 79
12.3.9. Sample Representativeness ..... 80
12.4. Verification and Validation Methods for Data from Physical Habitat and Biological Monitoring ..... 80

13. Data Quality Assessment ..... 81

13.1. Data Usability Assessment ..... 81
13.2. Data Analysis Procedures ..... 81

14. References ..... 85

# APPENDICES

Appendix A Power Test Results
Appendix B Typical Equipment Installations for Hydrologic Monitoring
Appendix C Monitoring Equipment Specifications
Appendix D Standardized Forms

# TABLES

Table 1. Measurement Quality Objectives for Water Quality Data. ..... 16
Table 2. Measurement Quality Objectives for Sediment Data. ..... 17
Table 3. Application, Reference, and Control Watersheds for the Redmond Paired Watershed Study. ..... 22
Table 4. Indicators of Stream Health for the Redmond Paired Watershed Study. ..... 45
Table 5. Sample Collection Requirements. ..... 59
Table 6. Quality Assurance Requirements and Anticipated Number of Water Quality Samples per Water Year. ..... 66
Table 7. Quality Assurance Requirements and Anticipated Number of Sediment Quality Samples per Water Year. ..... 67
Table 8. Data Qualifier Definitions and Usage Criteria. ..... 80
Table 9. Data Analysis Procedures for the Redmond Paired Watershed Study. ..... 82

# FIGURES

Figure 1. Application, Reference, and Control Watersheds. ..... 23
Figure 2. Evans Tributary 108 Paired Watershed Study Monitoring Locations. ..... 25
Figure 3. Monticello Creek Paired Watershed Study Monitoring Locations. ..... 27
Figure 4. Tosh Creek Paired Watershed Study Monitoring Locations. ..... 31
Figure 5. Colin Creek Paired Watershed Study Monitoring Locations. ..... 35
Figure 6. Seidel Creek Paired Watershed Study Monitoring Locations. ..... 37
Figure 7. Country Creek Paired Watershed Study Monitoring Locations. ..... 41
Figure 8. Tyler's Creek Paired Watershed Study Monitoring Locations. ..... 43

# 1. INTRODUCTION

The Redmond Paired Watershed Study (RPWS) is one of four effectiveness monitoring studies that was selected for implementation starting in 2014 for the Regional Stormwater Monitoring Program (RSMP) for Puget Sound. The goal of effectiveness monitoring under the RSMP is to provide widely applicable information for improving stormwater management in the region. Phase I and Phase II Municipal Stormwater Permittees in the Puget Sound Region contribute to a Pooled Stormwater Resources Fund that supports the RSMP and associated effectiveness monitoring studies. Selection of the RPWS for implementation under the RSMP was made based on a monitoring proposal that was presented to permittee representatives at workshops that were held on March 20, 2014, and May 6, 2014. The specific study question to be addressed through the RPWS is as follows:

> *How effective are watershed rehabilitation efforts at improving receiving water conditions at the watershed scale?*

To address this study question, a conceptual experimental design for the RPWS was subsequently developed and summarized in the *Redmond Paired Watershed Study Experimental Design Report* (Herrera 2015a). This conceptual experimental design was informed by a literature review (Herrera 2015b) that was conducted to identify lessons learned from past studies that have been implemented to achieve similar objectives. The conceptual experimental design was also developed based on input from a technical advisory committee that was formed for the study. This technical advisory committee includes representation from the following agencies:

- City of Redmond
- City of Seattle
- King County
- Kitsap County
- US Environmental Protection Agency
- US Geological Society
- Washington State Department of Ecology (Ecology)

Building on this previous work, this document represents the Quality Assurance Project Plan (QAPP) that will guide the implementation of all subsequent phases of the RPWS. This QAPP documents the experimental design and procedures that will be used during data collection, processing, and analysis to ensure all results obtained for the RPWS are scientifically defensible. It was prepared in accordance with Washington State Department of Ecology (Ecology) *Guidelines for Quality Assurance Project Plans* (Ecology 2004), and includes the following sections:

- **Background** – An explanation of why the project is needed
- **Project Description** – Project goals and objectives, and the information required to meet the objectives
- **Organization and Schedule** – Project roles and responsibilities, and the schedule for completing the work
- **Quality Objectives** – Performance (or acceptance) thresholds for collected data
- **Experimental Design** – The sampling process design for the study, including sample types, monitoring locations, and sampling frequency
- **Sampling Procedures** – A detailed description of sampling procedures and associated equipment requirements
- **Measurement Procedures** – Laboratory procedures that will be performed on collected samples
- **Quality Control** – Quality control (QC) requirements for both laboratory and field measurements
- **Data Management Procedures** – How data will be managed from field or laboratory recording to final use and archiving
- **Audits and Reports** – The process that will be followed to ensure this QAPP is being implemented correctly and the quality of the data is acceptable
- **Data Verification and Validation** – The data evaluation process, including the steps required for verification, validation, and data quality assessment
- **Data Quality (Usability) Assessment** – The procedures that will be used to determine if collected data are of the right type, quality, and quantity to meet project objectives

# 2. BACKGROUND

Municipal Stormwater Permits are issued by Ecology to regulate discharges from separated storm sewers owned or operated by Phase I and Phase II cities and counties. The Municipal Stormwater Permits establish the minimum requirements for permittees to address existing and future impacts to receiving waters from urbanization. Municipal Stormwater Permits require cities and counties to execute programmatic (nonstructural) activities and establish design standards for stormwater structural controls triggered by development (low impact development, runoff treatment, and flow control facilities). In theory, if all developed land in a watershed is equipped with nonstructural and structural stormwater controls, the receiving water would be protected from hydrologic and water quality impacts caused by urbanization. However, while the effectiveness of nonstructural and structural controls has been well documented at the site scale, limited data exists on the effectiveness of these controls in aggregate for actually improving conditions in receiving waters.

In February 2014, Ecology approved a Citywide Watershed Management Plan (WMP) (Herrera 2013) for the City of Redmond (City) that allows the City to use a watershed approach for stormwater management pursuant to the Municipal Stormwater Permit, Section 303(d) of the Clean Water Act, and salmon recovery. Through the implementation of this WMP, the City will focus stormwater best management practices (BMPs) in a subset of priority watersheds that are moderately impacted by urbanization and therefore expected to respond more quickly to rehabilitation efforts. This provides a unique opportunity to study the effectiveness of stormwater BMPs for improving receiving water conditions on an accelerated time frame. Recognizing this opportunity, the City is implementing the RPWS to quantify improvements in receiving water conditions.

To guide the development of the experimental design for the RPWS, a literature review was conducted to obtain information on past studies that have been implemented to achieve similar objectives. This literature review specifically involved online searches to identify published journals, proceedings, and gray literature on the following types of studies:

- Studies to quantify trends (5 years plus) in receiving water conditions following implementation of stormwater controls and/or habitat improvements
- Paired watershed studies looking at the effectiveness of stormwater controls for improving receiving water conditions
- Studies to quantify changes in receiving water conditions in response to increased watershed urbanization
- General references on sampling strategies/methodologies for detecting change in receiving water conditions.

These searches yielded 123 study references that were then reviewed in detail to identify a subset of 11 priority studies that were found to be the most relevant for informing the experimental design of the RPWS. Detailed descriptions of these studies were subsequently

provided in a summary report for the literature review (Herrera 2015b). In addition, all the studies were reviewed to determine if they utilized specific indicators for receiving water conditions in any of the following categories: hydrologic, chemical, physical habitat, and biological. These results were subsequently used to synthesize information on the effectiveness of specific indicators in these categories for assessing change in receiving water conditions. Key conclusions and recommendations from the literature review are as follows:

- The scope and nature of the RPWS is unprecedented in the literature. Numerous studies have been conducted with similar goals, but they were generally conducted at the sub-basin scale. In these studies, a hydrologic monitoring station was typically located at the mouth of the study basin. Therefore, monitoring stations at the mouth of the study watersheds for the RPWS was also recommended. However, because the study watersheds for the RPWS will be substantially larger than the sub-basins used in previous studies and rehabilitation efforts will likely occur in the upper reaches of these watersheds, additional hydrologic monitoring stations at a mid-point location was also recommended for the RPWS.

- Continuous flow data collection was used in each applicable study reviewed and is recommended for the RPWS. Furthermore, the most useful and pervasive hydrologic indicator appeared to be frequency and duration of high and low pulse count. These indicators at the least were specifically recommended for the RPWS to assess the success of rehabilitation efforts. Annual flow volume was also commonly used in the literature and should be considered when selecting indicators of hydrologic change. Modeling to quantify changes in hydrology as a function of land use changes and stormwater treatment applications has also been performed in a number of relevant studies. The RPWS provides an opportunity to validate the results from this modeling.

- The literature review indicated that most basin-scale studies have not been able to detect a difference in pollutant concentrations between basins with and without stormwater treatment facilities including low impact development (LID) practices. Load reductions were more easily quantified, but with concentration alone, natural variability tended to overwhelm any signal that could be associated with stormwater treatment applications. The most common parameter groups measured in the literature of relevant studies where nutrients, suspended solids, and metals. Parameters from these groups at the least were recommended for the RPWS.

- The majority of studies that assessed physical habitat response to watershed rehabilitation were conducted in reaches in which channel rehabilitation measures were applied. Consequently, they were designed to assess the localized effects of channel alterations. The RPWS will involve both channel rehabilitation and basin-wide BMP application. Consequently, a more synoptic approach was recommended for the RPWS to assess physical habitat recovery. Stations should be selected in reaches that will be restored and in reaches where there will be no physical alterations to the channel. In this way, the RPWS can assess physical habitat response to both localized and basin-wide drivers.

- Studies linking macroinvertebrate and fish response to watershed restoration have primarily focused on responses to in-channel work. Macroinvertebrate metrics can show considerable variation across small spatial scales and will be sensitive to local conditions in the channel which may override influences from higher up in the watershed. Because an objective of the RPWS is to measure both localized and

watershed effects on biologic recovery, it was recommended that the biological monitoring program mirror the habitat monitoring program discussed above. Specifically, multiple monitoring locations should be located in both reaches where channel rehabilitation will occur and in reaches that will only be affected by upstream stormwater management activities. Annual monitoring coinciding with the collection of habitat data was recommended. Monitoring of fish response was dropped from consideration because few studies were identified in the literature that showed this was an effective indicator for documenting improving conditions at the watershed scale.

Results from the literature review were subsequently used to develop a conceptual experimental design for the RPWS that was summarized in the *Redmond Paired Watershed Study Experimental Design Report* (Herrera 2015a). Following review and approval by the technical advisory committee for the RPWS, the contents of this report provided the foundation for the experimental design identified in this QAPP.

# 3. PROJECT DESCRIPTION

As described in the *Introduction* to this QAPP, the specific study question to be addressed through the RPWS is as follows:

> *How effective are watershed rehabilitation efforts at improving receiving water conditions at the watershed scale?*

In this context, rehabilitation efforts could include any of the following practices:

- Stormwater retrofits in upland areas that would include facilities for onsite stormwater management (e.g., low impact development [LID] practices), runoff treatment, and flow control
- Riparian and in-stream habitat improvements
- Programmatic practices for stormwater management

To answer the study question identified above, the RPWS will involve the collection of routine and continuous measurements of various hydrologic, chemical, physical habitat, and biological indicators of stream health over an extended time in seven watersheds categorized as follows:

- Three "Application" watersheds with wadeable lowland streams that are moderately impacted by urbanization and prioritized for rehabilitation efforts.
- Two "Reference" watersheds with relatively pristine wadeable lowland streams that do not require rehabilitation.
- Two "Control" watersheds with significantly impacted wadeable lowland streams by urbanization that are not currently targeted for rehabilitation pursuant to the WMP.

The pattern of interest will be evidence that receiving water conditions are improving in the Application watersheds while conditions in the Reference and Control watersheds remain relatively static. In addition to this monitoring, the effectiveness of specific structural stormwater controls in the watersheds that have been targeted for rehabilitation efforts will also be confirmed based on measurements of hydrologic and chemical parameters that are collected over a shorter timeframe. A more detailed description of the procedures that will be used for this monitoring is provided in the *Experimental Design* section of this QAPP.

# 4. Project Organization and Schedule

This section describes how the project is organized, key personnel, and the project schedule.

## 4.1. Organization and Key Personnel

Herrera and King County are jointly responsible for developing and implementing this QAPP with oversight from the City and Ecology. Herrera will oversee monitoring that is related to chemical, physical habitat, and biological indicators of stream health. King County will oversee monitoring that is related to hydrologic indicators of stream health. Key personnel that will be involved in this effort are identified below with their respective roles:

**City of Redmond**
15670 Northeast 85th Street
Redmond, Washington 98503
425-556-2741

*Andy Rheaume*, City Project Manager

**Washington State Department of Ecology**
Headquarter Office
P.O. Box 47600
Olympia, WA 98504-7600
360-407-7140

*Brandi Lubliner*, Regional Stormwater Monitoring Program Manager

**Herrera Environmental Consultants, Inc.**
2200 Sixth Avenue, Suite 1100
Seattle, WA 98121
206-441-9080

*John Lenth*, Herrera Project Manager, Water Quality and Biological Monitoring Lead
*Dylan Ahearn*, Ph.D., Monitoring Coordinator
*Josh Wozniak*, Physical Habitat Monitoring Lead
*Rob Zisette*, Sediment Quality Monitoring Lead
*Gina Catarra*, Data Quality Assurance Officer

**King County**
**Department of Natural Resources and Parks**
**Water and Land Resources Division**
201 South Jackson Street – Suite 600
Seattle, WA 98104-3855
206-296-0100

*Jenée Colton*, King County Project Manager
*Dave Funke*, Hydrologic Monitoring Lead

**OnSite Environmental, Inc.**
201 South Jackson Street – Suite 600
Seattle, WA 98104-3855
206-296-0100

*David Baumeister*, Laboratory Project Manager for Water and Sediment Quality Monitoring

**EcoAnalysts, Inc.**
1420 S. Blaine Street. Suite 14
Moscow, Idaho 83843
208-882-2588

*Gary Lester*, Laboratory Project Manager for Biological Monitoring

Ongoing technical oversight of the RPWS will also be provided by the following members of the technical advisory committee that was formed for the study:

*Jerallyn Roetemeyer*, City of Redmond

*Doug Hutchinson*, City of Seattle

*Jeff Burkey*, King County

*Kate Macneale*, King County

*Chris May*, Kitsap County

*Dino Marshalonis*, US Environmental Protection Agency

*Rick Dinicola*, US Geological Survey

*Chris Konrad*, US Geological Survey

*Rich Sheibley*, US Geological Survey

*Karen Dinicola*, Washington State Department of Ecology

*Mindy Roberts*, Washington State Department of Ecology

## 4.2. Schedule

Monitoring of the RPWS will begin in October 2015 and continue for a period of approximately 10 years. On an annual basis, the following monitoring activities will occur according to the schedule indicated:

- Hydrologic Monitoring: Year-round
- Water Quality Monitoring: Year-round
- Physical Habitat Monitoring: July through September
- Sediment Quality Monitoring: May through June
- Biological Monitoring: – July through August

# 5. QUALITY OBJECTIVES

The goal of this QAPP is to ensure that the data collected for this study are scientifically accurate, useful for the intended analysis, and legally defensible. To achieve this goal, the collected data will be evaluated relative to the following indicators of quality assurance:

- **Precision**: A measure of the variability in the results of replicate measurements due to random error
- **Bias**: The systematic or persistent distortion of a measurement process that causes errors in one direction (for example the measured mean is different from the true value)
- **Representativeness**: The degree to which the data accurately describe the conditions being evaluated based on the selected sampling locations, sampling frequency and duration, and sampling methods
- **Completeness**: The amount of data obtained from the measurement system
- **Comparability**: The ability to compare data from the current study to data from other similar studies, regulatory requirements, and historical data

Measurement quality objectives (MQOs) are performance or acceptance criteria that have been established for each of these quality assurance indicators. These MQOs are described below in separate subsections for hydrologic data, chemistry data, *in situ* water quality data, physical habitat monitoring, and biological monitoring.

## 5.1. Measurement Quality Objectives for Continuous Hydrologic Data

The major tasks in support of this objective are to accurately measure and record a continuous time series of stream water level (stream stage, gauge height), perform accurate instantaneous streamflow measurements over the range of recorded stage, and produce reliable ratings in order to predict flow throughout the entire range of stage over time on a particular stream. The continuous water level record is accomplished using instrumentation whose function can be assessed against MQO criteria. MQOs are not established for direct measurements of streamflow or the development and application of rating curves. Data quality for these tasks is addressed by following standard procedures and data review protocol. Direct measurements of stream discharge will follow procedures described in Standard Operating Procedure for Measuring and Calculating Stream Discharge – EAP056 (Washington State Department of Ecology, 2014). US Geological Survey, Water Supply Paper 2175 describes methods for developing applying rating curves as well as senior level data review. The development and application of rating curves is aided by installing a stream gauge at stations with a stable hydraulic control. For example, at six stations the gauge location is upstream of an existing weir, flume, or culvert that provides a stable hydraulic control. The remaining stations rely on natural channel features that may shift over time.

### 5.1.1. Precision

Because it is difficult to obtain replicate measurements from hydrologic monitoring equipment during continuously changing site conditions, precision of the hydrologic data will be assessed based on a controlled tests on the monitoring equipment that will be performed annually. These tests will specifically involve the following steps:

1. Place a pressure transducers obtained for this project into a large bucket.
2. Fill bucket with 0.5 foot of water.
3. Zero the pressure transducer.
4. Run the test for 1 hour, collecting data at 5-minute intervals.
5. Repeat the test with 1.0 feet of water in the bucket.

The MQO for precision is less than 5 percent change in water level readings from one measurement to the next over the duration of two tests performed at different water levels (i.e., 0.5 and 1 feet).

### 5.1.2. Bias

The bias of hydrologic monitoring data will be assessed based on comparisons of monitoring equipment readings to an independently measured "true" value. In this case the true value will be derived from manual measurements of water level that are obtained from a staff gauge at each monitoring location. The staff gauge may be a visible graduated scale or a designated constructed point over the water from which to measure the water level. These manual measurements will be made in conjunction with routine visits to each monitoring location that will occur every 4 to 8 weeks.

If the monitoring equipment is not affected by drift or other operational problems, the difference between the equipment's reading and the manual measurement of water level ("instrument offset") should remain constant over time and varying water depths. Therefore, bias in these data will be assessed based on the change in the instrument drift value relative to all previous measurements. Specifically, a change in the instrument drift value of plus or minus 2 standard deviations relative to the mean from all previous measurements will trigger an assessment of the monitoring equipment to determine proper functioning. Practically, if the instrument offset changes due to instrument "drift" three consecutive observations, a replacement or repair will be made.

### 5.1.3. Representativeness

The representativeness of the hydrologic and continuous water quality data will be ensured by the proper installation of the monitoring equipment, including primary and secondary devices.

### 5.1.4. Completeness

Completeness will be assessed based on the occurrence of gaps that may occur in the data record for all monitoring equipment. The associated MQO is less than 10 percent of the total data record missing due to equipment malfunctions or other operational problems.

Completeness will be ensured through routine maintenance of all monitoring equipment and immediate implementation of corrective actions if problems arise.

### 5.1.5. Comparability

Standard monitoring procedures, units of measurement, and reporting conventions will be applied to meet the goal of data comparability.

## 5.2. Measurement Quality Objectives for Rainfall Data

Hydrologic monitoring will include the installation of three rain gauges at representative locations. The rain gauges will be installed in the south study area to characterize rainfall in the Country Creek and Tosh Creek watersheds; in the north study area to characterize rainfall in the Tyler Creek and Monticello Creek watersheds, and in the east study area to characterize rainfall in the Evans Creek Tributary 108 watershed. King County already operates rain gauges near the Colin Creek and Seidel Creek watersheds. The rain gauges will be tipping bucket types, with 8-inch-diameter funnels, recording rainfall in 0.01-inch increments. Data loggers will record the time of each 0.01-inch event. The MQOs for rainfall monitoring are defined below.

### 5.2.1. Precision

Precision will be insured by proper installation, calibration, and maintenance of the rain gauge. Manufacturer's instructions for installation will be followed, with special care to make the gauge level. The instrument calibration will be checked annually by running a measured amount of water into the funnel. The MQO for precision is less than 5 percent difference in the number of tips actually recorded compared to the anticipated number of tips that should be recorded given the amount of water supplied. The instrument will be adjusted if the MQO is not achieved.

### 5.2.2. Bias

There is no practical method to determine the actual amount of rainfall compared to what the rain gauge is recording. The methods used to ensure precision will also minimize bias.

### 5.2.3. Representativeness

The representativeness of the rainfall data will depend on the location of the installation. While it is not always possible to achieve a perfect location, efforts will be made to ensure the rainfall measurements are representative of the actual rain falling on a given area based on a careful consideration of multiple installation location characteristics. Some of the more important factors which influence the representativeness of a gauge are as follows:

- Site the gauge on level ground where possible. Avoid sloping sites.
- Site should have adequate protection from strong winds.
- Site should be free of large obstructions such as buildings and trees.
- Provide suitable ground surface to avoid splashing into the gauge.

It is not anticipated that the rain gauges will be supplied with heaters to melt snow and ice. Therefore, precipitation from snow and ice will not be accurately measured.

### 5.2.4. Completeness

Completeness will be assessed based on the occurrence of gaps that may occur in the data record for all monitoring equipment. The associated MQO is less than 10 percent of the total data record missing due to equipment malfunctions or other operational problems. Completeness will be ensured through routine maintenance of all monitoring equipment and immediate implementation of corrective actions if problems arise. Redundant equipment has also been deployed at the majority of monitoring stations to reduce the potential for data gaps due to equipment malfunctions.

### 5.2.5. Comparability

Standard monitoring procedures, units of measurement, and reporting conventions will be applied to meet the goal of data comparability.

## 5.3. Measurement Quality Objectives for Discrete Water and Sediment Quality Data

Quality assurance indicators for discrete water and sediment quality data are expressed in terms of precision, bias, representativeness, completeness, and comparability. To ensure data obtained for the RPWS are of comparable quality to those collected through other RSMP monitoring efforts, the specific MQOs that have been identified for this study were generally derived from the *Quality Assurance Project Plan for Status and Trends Monitoring of Small Streams in the Puget Lowlands Ecoregion* (Ecology 2014). These MQOs are described below and summarized in Tables 1 and 2. Note that the term "reporting limit" in this document refers to the practical quantification limit established by the laboratory, not the method detection limit.

### 5.3.1. Precision

Precision will be assessed by laboratory duplicates, field duplicates, matrix spike/matrix spike duplicates (if required), and laboratory control sample/laboratory control sample duplicates (if performed) (see below, under *Bias*). These will be assessed using relative percent difference (*RPD*) as calculated using the following equation:

$$RPD = \left( \frac{\left| C_1 - C_2 \right|}{C_1 + C_2} \right) \times 200\%$$

Where: $RPD$ = Relative percent difference

$C_1$ and $C_2$ = Concentration values

If either the sample or duplicate sample is at or below the reporting limit the MQO cannot be calculated. *RPD* values exceeding those identified in Tables 1 and 2 will trigger an assessment

as to whether there are any problems with laboratory methodology, which might warrant remediation.

### 5.3.2. Bias

Bias will be assessed based on analyses of method blanks, matrix spikes, matrix spike duplicates, and laboratory control samples (LCS).

| Table 1. Measurement Quality Objectives for Water Quality Data. | | | | | | | |
|---|---|---|---|---|---|---|---|
| **Parameter** | **Analytical Method** | **Reporting Limit Target** | **Laboratory Method Blank[a]** | **Control Standard Recovery** | **Matrix Spike Recovery[b]** | **Laboratory Duplicate RPD** | **Field Duplicate RPD** |
| **Laboratory Analysis** | | | | | | | |
| Total suspended solids | SM 2540D | 1 mg/L | ≤ RL | 80–120% | NA | ≤ 25% | ≤ 25% |
| Turbidity | EPA 180.1 | 0.5 NTU | ≤ RL | 90–110% | NA | ≤ 25% | ≤ 25% |
| Hardness | EPA 200.7 and SM 2340B | 1.0 mg/L | ≤ RL | 85–115% | 75–125% | ≤ 20% | ≤ 20% |
| Dissolved organic carbon | SM 5310B | 1 mg/L | ≤ RL | 85–115% | 75–125% | ≤ 20% | ≤ 20% |
| Fecal coliform bacteria | SM 9222D | 1 cfu/100 mL | ≤ RL | NA | NA | ≤ 35% | ≤ 50% |
| Total phosphorus | EPA 365.1 | 0.005–0.01 mg/L | ≤ RL | 80–120% | 75–125% | ≤ 20% | ≤ 20% |
| Total nitrogen | SM 4500 N-B | 0.025–0.1 mg/L | ≤ RL | 80–120% | 75–125% | ≤ 20% | ≤ 20% |
| Total/dissolved copper and zinc | EPA 200.8 | 1.0 µg/L (Cu)<br>5.0 µg/L (Zn) | ≤ RL | 85–115% | 75–125% | ≤ 20% | ≤ 20% |
| **Field Analysis** | | | | | | | |
| Dissolved oxygen | Field meter | 0.2 mg/L | NA | NA | NA | NA | ≤ 10% |
| Conductivity | Field meter | + 1 mS/cm | NA | NA | NA | NA | ≤ 10% |
| Temperature | Field meter | + 0.2°C | NA | NA | NA | NA | ≤ 10% |

[a] If criteria is not met, project sample data within 5 times the blank concentration are flagged with a J.

[b] For inorganics, the Contract Laboratory Program (CLP) Functional Guidelines state that the spike recovery limits do not apply when the sample concentration exceeds the spike concentration by a factor of four or more (Ecology 2005).

NA = not applicable.

RL = reporting limit.

RPD = relative percent difference.

| Table 2. Measurement Quality Objectives for Sediment Data. | | | | | | | | |
|---|---|---|---|---|---|---|---|---|
| **Parameter** | **Analytical Method** | **Reporting Limit Target** | **Laboratory Method Blank[a]** | **Control Standard Recovery** | **Surrogate Recovery** | **Matrix Spike Recovery[b]** | **Duplicate RPD** | **Field Duplicate RPD** |
| Total organic carbon | EPA 9060A | 0.1% | ≤ RL | 80–120% | NA | NA | ≤ 20% | ≤ 35% |
| Metals (copper and zinc) | EPA 6020 | 0.5 mg/kg (Cu)<br>5.0 mg/kg (Zn) | ≤ RL | 85–115% | NA | 75–125% | ≤ 20% | ≤ 35% |
| Polycyclic aromatic hydrocarbons | EPA 8270D | 70 µg/kg | ≤ RL | Lab specified | Lab specified | Lab specified | ≤ 40% | ≤ 50% |
| Phthalates | EPA 8270D | 70–250 µg/kg | ≤ RL | Lab specified | Lab specified | Lab specified | ≤ 40% | ≤ 50% |

[a] If criteria is not met, project sample data within 5 times the blank concentration are flagged with a J.

[b] For inorganics, the Contract Laboratory Program (CLP) Functional Guidelines state that the spike recovery limits do not apply when the sample concentration exceeds the spike concentration by a factor of four or more (Ecology 2005).

NA = not applicable.

RL = reporting limit.

RPD = relative percent difference.

The values for method blanks will not exceed the reporting limit. The acceptable percent recoveries for matrix spikes and LCS are identified for each parameter in Tables 1 and 2. Percent recovery will be calculated using the following equation:

$$\%R = \frac{(S - U)}{C_{sa}} \times 100\%$$

| | | | |
|---|---|---|---|
| Where: | %R | = | Percent recovery |
| | S | = | Measured concentration in spike sample |
| | U | = | Measured concentration in unspiked sample |
| | $C_{sa}$ | = | Actual concentration of spike added |

If the analyte is not detected in the unspiked sample, then a value of zero will be used in the equation.

Percent recovery for LCS will be calculated using the following equation:

$$\%R = \frac{M}{T} \times 100\%$$

| | | | |
|---|---|---|---|
| Where: | %R | = | Percent recovery |
| | M | = | Measured value |
| | T | = | True value |

### 5.3.3. Representativeness

To ensure the representativeness of the collected samples, this project will assess a range of water quality conditions, both seasonally and during periods of base and storm flow. Sample representativeness will be ensured by employing consistent and standard sampling procedures.

### 5.3.4. Completeness

Completeness will be assessed based on the percentage of specified samples (listed in this QAPP) collected. The completeness goal shall be 90 percent. Completeness for acceptable data is defined as the percentage of acceptable data out of the total amount of data generated. Acceptable data is either data that passes all QC criteria, or data that may not pass all QC criteria but has appropriate corrective actions taken.

### 5.3.5. Comparability

Standard sampling procedures, analytical methods, units of measurement, and reporting limits will be applied in this study to meet the goal of data comparability. The results will be

tabulated in standard spreadsheets to facilitate analysis and comparison with water quality threshold limits (e.g., WAC 173-201A), where appropriate.

## 5.4. Measurement Quality Objectives for Continuous *In Situ* Water Quality Data

*In situ* water quality monitoring will include continuous measurements of water temperature and conductivity at individual monitoring locations. These measurements will then be used to determine specific conductance. The MQOs for *in situ* water quality monitoring are defined below.

### *5.4.1. Precision*

The instruments used to measure temperature and conductivity rely on user performed calibrations to ensure maximum accuracy. Before deployment, each data logging instrument will be calibrated with stock conductivity solution according to the manufacturer's instructions. They will then be tested in solutions of known temperature and conductivity to assess precision. The temperature and conductivity of the test solutions will be determined with a recently calibrated handheld instrument with specified accuracy of 0.1°C and +/- 1 percent of the conductivity reading. The test solutions will be room temperature tap water, refrigerated tap water, and room temperature prepared conductivity solution approximately 300 µS.

The MQO for precision for temperature is 0.2°C from the observed reading. The MQO for precision for conductivity is 5 µS or 5 percent of the reading (whichever is greater) from the observed conductivity.

### *5.4.2. Bias*

The bias of the continuous *in situ* water temperature and conductivity readings will be assessed based on comparisons of monitoring equipment readings to an independently measured "true" value. In this case the true value will be derived from manual measurements of temperature and conductivity that are obtained from a hand held instrument reading at the monitoring location. These manual measurements will be made in conjunction with routine visits to each monitoring location (see next section).

If the monitoring equipment is not affected by drift or other operational problems, the difference between the equipment's reading and the manual measurement should be less than the precision specified above. If the instrument readings exceed the precision limits due to instrument "drift" for two consecutive observations, the instrument will be re-calibrated. If precision limits are exceeded after recalibration, a replacement or repair will be made.

### *5.4.3. Representativeness*

The representativeness of the continuous water quality data will be ensured by the proper installation of the monitoring equipment.

### 5.4.4. Completeness

Completeness will be assessed based on the occurrence of gaps that may occur in the data record for all monitoring equipment. The associated MQO is less than 10 percent of the total data record missing due to equipment malfunctions or other operational problems. Completeness will be ensured through routine maintenance of all monitoring equipment and immediate implementation of corrective actions if problems arise. At some locations, flow may be so low that there is insufficient depth for the water quality instruments to function. These "dry" periods will not be construed as missing record.

### 5.4.5. Comparability

Standard monitoring procedures, units of measurement, and reporting conventions will be applied to meet the goal of data comparability. The conductivity of water is highly dependent on temperature. In order to make comparisons, conductivity is normally corrected to a chosen reference temperature to give specific conductance. All *in situ* conductivity readings will be converted to specific conductance at 25°C (K25) with the formula:

$$K25 = \frac{C}{(1 + (1.91/100)*(T-25))}$$

Where C is the measured conductivity and T is the measured temperature in degrees Celsius.

## 5.5. Measurement Quality Objectives for Biological Monitoring

Quality assurance indicators for benthic macroinvertebrates are expressed in terms of visit precision, bias, representativeness, completeness, and comparability. The MQOs that have been identified for this study follow those from Appendix B-1 of the *Quality Assurance Project Plan for Status and Trends Monitoring of Small Streams in the Puget Lowlands Ecoregion* (Ecology 2014c). Note Appendix B-1 identifies MQOs for both benthic macroinvertebrate and periphyton sampling; however, only the applicable MQOs for macroinvertebrate sampling will be used for this study.

# 6. EXPERIMENTAL DESIGN

To answer the study question identified in the *Introduction* to this document, the experimental design for the RPWP has two primary components:

- **Status and Trends Monitoring**: routine and continuous measurements of various hydrologic, chemical, physical habitat, and biological indicators of stream health over an extended time frame to quantify improvements in receiving water conditions in response to watershed rehabilitation efforts.
- **Effectiveness Monitoring**: measurements of hydrologic and chemical parameters over a relatively short timeframe to document the effectiveness of specific structural stormwater controls that have been constructed to improve receiving water conditions.

The Status and Trends Monitoring will utilize a "paired watershed" experimental design that will involve the collection of these measurements in seven watersheds categorized as follows:

- Three "Application" watersheds with wadeable lowland streams that are moderately impacted by urbanization and prioritized for rehabilitation efforts.
- Two "Reference" watersheds with relatively pristine wadeable lowland streams that do not require rehabilitation.
- Two "Control" watersheds with significantly impacted wadeable lowland streams by urbanization that are not currently targeted for rehabilitation pursuant to the WMP.

As described below, fixed monitoring stations will be established in each watershed for monitoring various indicators of stream health. Due to the scale of the RPWP and the anticipated lag between applying stormwater controls and resultant improvements in receiving water conditions, quantifying a cause and effect relationship between these events may take many years. Therefore, monitoring at the fixed monitoring stations will occur over an anticipated 10-year timeframe. Furthermore, because the effectiveness of watershed rehabilitation practices to be implemented in the Application watersheds (e.g., stormwater retrofits, in-stream habitat improvements, and programmatic practices) may vary for different types of receiving water impairments, a broad suite of indicators for assessing potential improvements will be monitored within the following categories: hydrologic, water quality, physical habitat, sediment quality, and biological. The pattern of interest will be evidence that receiving water conditions are improving based on one or more of these indicators in the Application watersheds while conditions in the Reference and Control watersheds remain relatively static.

To implement the Effectiveness Monitoring, roving stations will be established in association with specific structural stormwater controls to verify they are constructed properly and performing as designed. The roving stations will be moved from one year to the next once a facility's effectiveness has been verified and new facilities come online. These sites will be essential to the study, as the explanation of the signal observed within the receiving waters must be tied to the efficacy of rehabilitation efforts within the watersheds.

The Application, Reference, and Control watersheds that have been selected for the RPWS are described in the following subsection. Subsequent subsections then provide more detailed information on the Status and Trends Monitoring and Effectiveness Monitoring, respectively, including the monitoring stations, measurement frequency, indicators, and data analysis methods where applicable.

## 6.1. Study Watersheds

As described above, monitoring for the RPWS will occur in a total of seven watersheds: three Application watersheds, two Reference watersheds, and two Control watersheds. Table 3 identifies the name, predominant land use/cover, and size of each watershed; the location of all the watersheds is shown in Figure 1. A detailed summary of conditions within each watershed is also provided below with information on planned rehabilitation efforts in the Application watersheds as applicable.

**Table 3. Application, Reference, and Control Watersheds for the Redmond Paired Watershed Study.**

| Watershed Name | Watershed Type | Dominant Land Use/Cover | Watershed Total Area (acres) | Watershed Areas inside Redmond (acres) |
|---|---|---|---|---|
| Evans Creek Tributary 108 | Application | Residential | 397 | NA[a] |
| Monticello Creek | Application | Residential/Commercial | 345 | 264 |
| Tosh Creek | Application | Residential/Commercial | 299 | 276 |
| Colin Creek | Reference | Forest | 1,990 | 90 |
| Seidel Creek | Reference | Forest | 1,188 | 615 |
| Country Creek | Control | Residential/Commercial | 212 | 212 |
| Tyler's Creek | Control | Residential/Commercial | 168 | 167 |

[a] Entire watershed is located within King County's jurisdiction boundaries.

### 6.1.1. Application Watersheds

The watersheds for Evans Creek Tributary 108, Monticello Creek, and Tosh Creek were selected as Application watersheds for the RPWS. Conditions within each of these watersheds are described in the following subsections.

#### 6.1.1.1. Evans Creek Tributary 108 Watershed

Evans Creek Tributary 108 is located within the Bear-Evans Creek watershed in the Northeast Quarter, Sections 4, 5, 8, and 9, Township 25, Range 6 East WM, in King County (Figures 1 and 2). The watershed is approximately 397 acres with dominantly till soils (i.e., Alderwood and Everett soils); land cover in the watershed is approximately 37 percent forest and 16 percent impervious area. The Evans Creek Tributary 108 watershed has experienced a significant amount of residential development that occurred before adequate stormwater controls were required on new development, which has degraded the tributary's water quality/health and contributed to documented degradation of Evans Creek. Currently, average median benthic index of biotic integrity (B-IBI) scores for three stations in the watershed range from 28 to 31, which indicates the stream's health is on the low side of "fair."

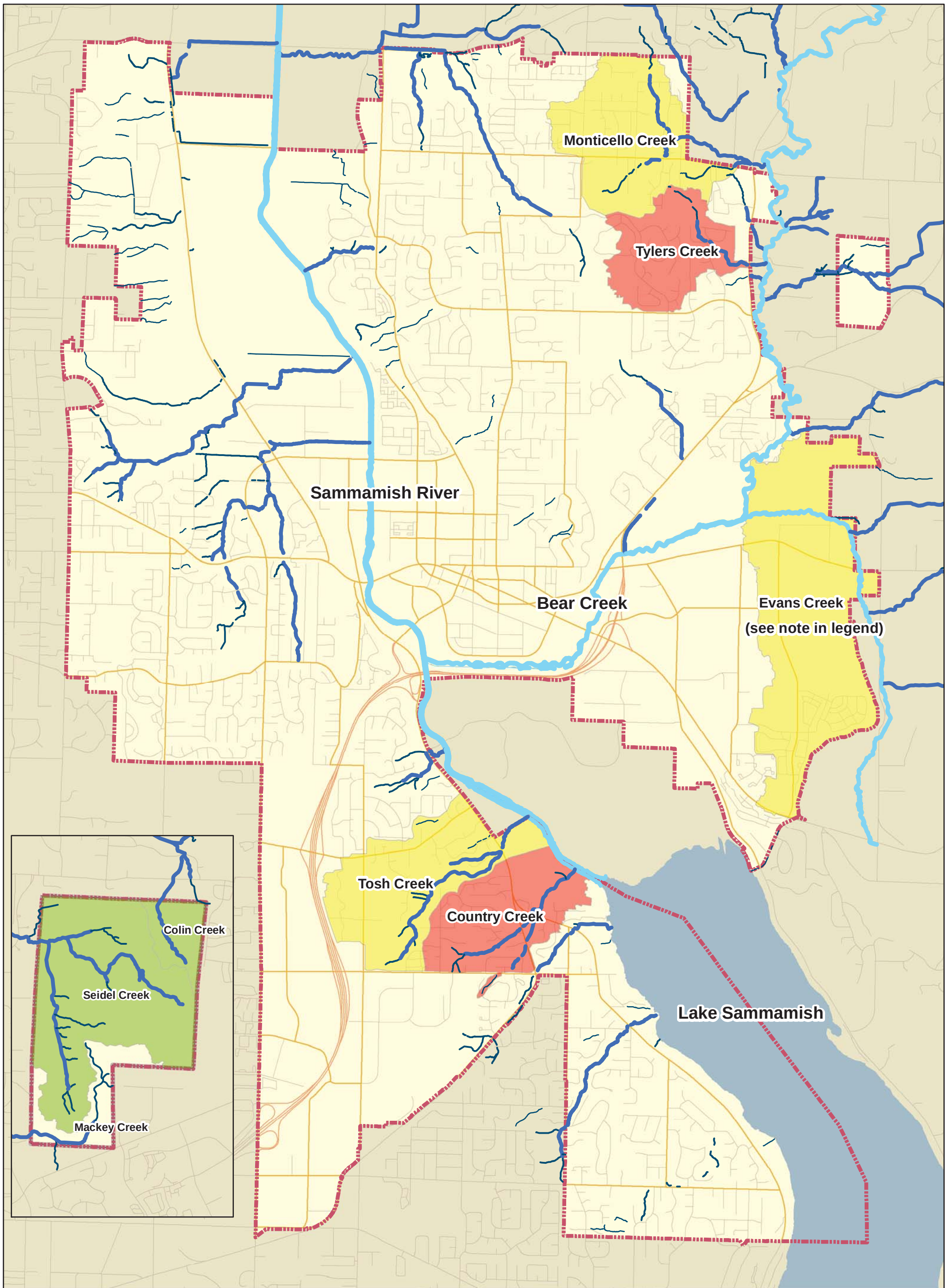


**Figure 1. Application, Reference, and Control Watersheds.**

City of Redmond, Washington

06/18/2015

N

0 0.25 0.5 1 1.5 Miles

CityofRedmond WASHINGTON

Disclaimer: This map is created and maintained by the Natural Resources Division of the City of Redmond, Washington, for reference purposes only. The City makes no guarantee as to the accuracy or completeness of the features shown on this map.

## Legend

- Class I Stream
- Class II Stream
- Class III Stream
- Class IV Stream
- City Limits
- Reference Watersheds
- Application Watersheds
- Control Watersheds

**This figure shows Evans Creek watershed within Redmond. Evans 108 is east of Redmond and illustrated in Figure 2.**

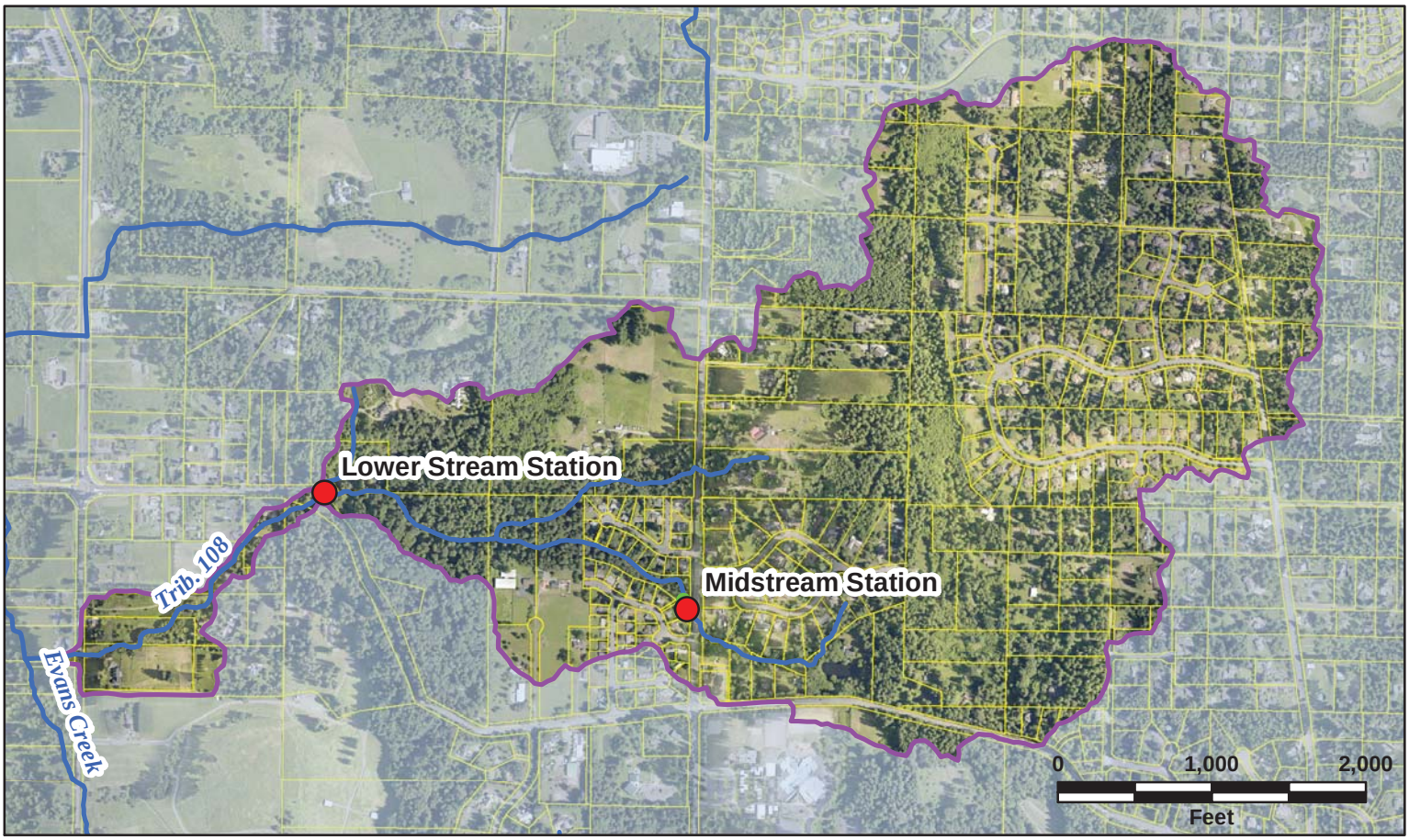

# Figure 2. Evans Tributary 108 Paired Watershed Study Monitoring Locations.

King County, Washington

Dec. 17, 2015

- Flow and WQ Monitoring
- Habitat, Biological, and Sediment Monitoring
- Streams and Rivers
- King County Parcels
- Basin Boundary

King County
Department of Natural Resources and Parks
**Water and Land Resources Division**

**klinkat \\dnrp1\projects\WLRD\15076\Trib108_8x11.mxd**

The information included on this map has been compiled by King County staff from a variety of sources and is subject to change without notice. King County makes no representations or warranties, express or implied, as to accuracy, completeness, timeliness, or rights to the use of such information. This document is not intended for use as a survey product. King County shall not be liable for any general, special, indirect, incidental, or consequential damages including, but not limited to, lost revenues or lost profits resulting from the use or misuse of the information contained on this map. Any sale of this map or information on this map is prohibited except by written permission of King County.

A recent habitat investigation found that Evans Creek Tributary 108 is lacking in riparian corridor, channel bed stability, large woody debris and riparian vegetation (Berge and Lantz 2014). However, the presence of Chinook has been documented. The tributary is thought to also support coho and cutthroat trout although the habitat may only be suitable for spawning in some reaches.

In September 2015, King County received a draft water quality funding agreement through the Stormwater Financial Assistance Program to design and construct two stormwater retrofit detention vaults in a residential area within the Evans Creek Tributary 108 watershed. Scheduled for construction in 2017, these retrofits will be designed to meet performance standards for on-site stormwater management and flow control that are identified in the 2012 *Stormwater Management Manual for Western Washington* (Ecology 2014a). The goal of these retrofits is to improve B-IBI scores in the watershed to a "good" condition or better (i.e., 38 to 50). For reference, B-IBI scores from sampling that was conducted in 2014 generally indicate conditions in the creek are currently "poor."

#### 6.1.1.2. Monticello Creek Watershed

Monticello Creek is a right bank tributary of Bear Creek (Figure 1). The main stem originates in King County, north of the city boundary, and flows south and east. A right bank tributary joins the main stem from the west within the city, and another right bank tributary enters the stream from the south in King County. The headwaters of Monticello Creek are in King County and are dominated by large lots and pastures. The northernmost reach within the city limits flows through Northeast Redmond Neighborhood Park, a 5-acre wooded parcel. The mouth of the creek is located in the Middle Bear Creek Natural Area. The total stream length is 9,878 linear feet; 6,125 linear feet are within the city, of which 3,170 linear feet are designated as a Class II stream. An average of 3.5 stormwater outfalls can be found per 1,000 feet along the creek.

The Monticello Creek watershed is 345 acres; 264 acres are within the city limits. Land use is predominantly single-family residential, parks and undeveloped land. There is a relatively low effective impervious surface (EIS) area within the city portion of the watershed (23 percent). Land cover is mostly landscaping (Figure 3). The watershed is experiencing significant redevelopment, converting low density (1- to 5-acre lots) to high density residential development (less than 0.25-acre lots). Most of the development is vested to current flow control standards, meaning vaults or ponds designed to mimic forested runoff conditions for storms ranging from one-half the 2-year through the 50-year storm events are being installed along with redevelopment projects.

Ecology included a segment of Monticello Creek on the 2012 Section 303(d) list as a Category 5 waterbody due to high temperature. Monticello Creek also has an Ecology drafted and US Environmental Protection Agency approved Total Maximum Daily Load (TMDL) study and Implementation Plan to address impairment from fecal coliform bacteria. The listed segment is located in King County from the east boundary of the city near 178th Street downstream to the mouth (Ecology 2012). B-IBI scores for Monticello Creek generally indicate conditions are "fair" based on data collected by the City from 2005 through 2010 as part of the Annual Benthic Monitoring study (PSSB 2011). Next to the scores for Mackey Creek, these are the highest B-IBI scores on any City stream outside the Redmond Watershed Preserve Park, and above the B-IBI score threshold indicative of supporting self-sustaining salmonid populations (Ecology 2014b).

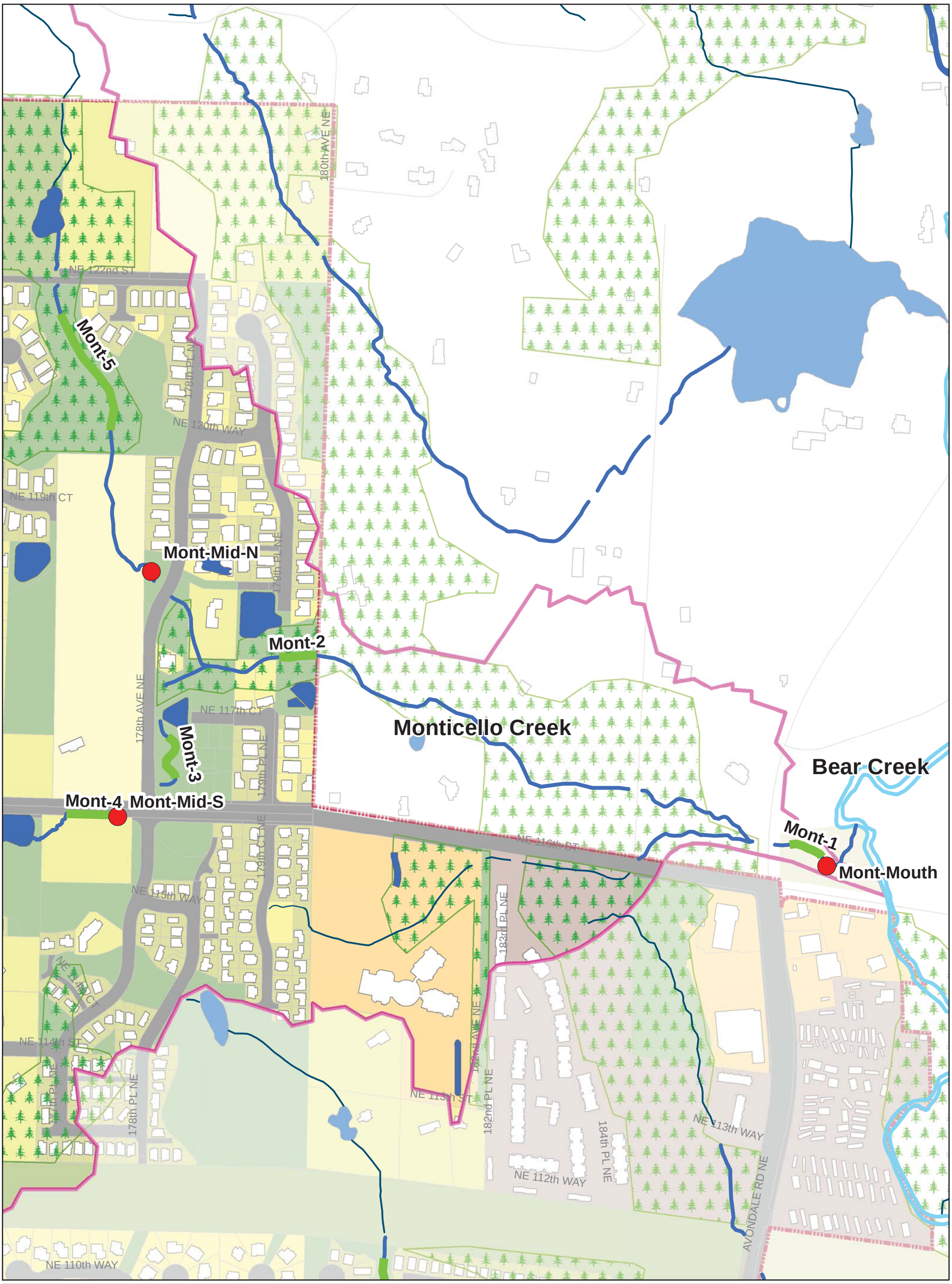


# Figure 3. Monticello Creek Paired Watershed Study Monitoring Locations.

City of Redmond, Washington

6/25/2015

N

0 0.0375 0.075 0.15 Miles

Disclaimer: This map is created and maintained by the Natural Resources Division of the City of Redmond, Washington, for reference purposes only. The City makes no guarantee as to the accuracy or completeness of the features shown on this map.

**Legend**

- Class I Stream
- Class II Stream
- Class III Stream
- Class IV Stream
- Ponds
- City Limits
- Watershed Boundary
- Commercial
- Industrial
- Multifamily
- Park / Undeveloped
- Public ROW
- Single Family HighDensity
- Single Family Low Density
- Single Family Medium Density
- Single Family Rural Density
- Flow & WQ Monitoring
- Habitat, Sediment & Biological Monitoring

Riparian buffers are relatively dense in the upper stream channel, with a narrow band of trees on both sides of the channel. Riparian buffers on the main stem downstream, along Avondale Road NE, are modest. Riparian buffers on the west tributary lack tree cover in most areas (Washington Trout 2005).

There are five full fish passage barriers on the main stem and west tributary and two other partial barriers. In addition, steep gradients and unknown channel conditions between the city limits and Avondale Road NE may create fish passage issues. Fish passage through the culvert under Avondale Road NE is questionable. Significant salmonid use has been documented in the lower 2,400 feet of the main stem (Washington Trout 2005).

The City has recently initiated development of the Monticello Creek Watershed Restoration Plan. This plan will provide detailed engineering analysis to identify a comprehensive rehabilitation strategy for Monticello Creek. With partial funding obtained through a National Estuaries Program grant, King County and the City have partnered to develop this plan. After its completion in 2017, the plan will identify all projects required to fully rehabilitate the creek and provide preliminary designs for the three highest ranked projects in terms of their overall benefit. It is anticipated that these projects will not be constructed and operational in the Monticello watershed until 2020. Because the benefits of these structural stormwater controls will not be realized in the watershed for some time, the City is targeted this watershed for non-structural stormwater controls (such as increased street sweeping, public outreach, business inspections, municipal best management practices, etc.) in the near-term. Furthermore, the significant pace of redevelopment in the watershed described above is also triggering requirements for implementing structural stormwater controls at the individual project site scale. Monitoring conducted through the RPWS will initially be performed to evaluate potential improvements to stream health from these later rehabilitation strategies until the structural stormwater controls from the Monticello Creek Watershed Restoration Plan come online. When non-structural and structural stormwater controls are being implemented concurrently, it may not be possible to quantify the relative benefits of either type of control for improving stream health based on some indicators (e.g., water quality). However, the benefits of some stormwater controls should be readily detected if they are targeting specific problems (e.g., construction of large detention vaults for flow control).

#### *6.1.1.3. Tosh Creek Watershed*

Tosh Creek is located in the southwest portion of the city (Figure 1). Tosh Creek enters the left bank of the Sammamish River just upstream of the Willowmoor weir at the boundary of Marymoor Park. The upper reaches flow through residential areas. The majority of the valley reaches are in good condition with wide forested buffers. Numerous seeps and small tributaries help maintain consistent base flows. The channel is straightened and ditched in the reach downstream of West Lake Sammamish Parkway (WLSP). The total stream length is 10,370 linear feet, of which 7,215 linear feet is designated as a Class II stream. The stormwater influence in the Tosh Creek watershed is not as significant as in some of the adjacent watersheds because some of the developed commercial area in the upper reaches is piped to Villa Marina Creek via a stormwater trunk line. An average of 0.8 stormwater outfalls can be found per 1,000 feet along the creek.

The Tosh Creek watershed within the city is 276 acres; the entire watershed is 299 acres. The remainder of the watershed is in unincorporated King County. The Tosh Creek watershed is highly developed with predominantly single-family dwellings (see Figure 4). Within the watershed, approximately 39 percent of the area can be considered EIS. Land cover is divided evenly between landscaped yards and impervious surface (39 percent each), with minor amounts of forest and pasture.

Ecology included a segment of Tosh Creek upstream of WLSP on the 2012 Section 303(d) list as a Category 5 waterbody due to impairment from fecal coliform bacteria (Ecology 2012). B-IBI scores for Tosh Creek indicate conditions are "poor" based on data collected in 2008, 2009, and 2010 by the City as part of the Annual Benthic Monitoring study (PSSB 2011). However, this rating may be misleading because the samplers inadvertently chose locations with some of the poorest water quality on the stream (R. Dane, personal communication, December 5, 2011). The City expects higher B-IBI scores for Tosh Creek in future sampling efforts as a number of other indicators suggest this stream is relatively healthy. As described below, new monitoring stations for biological monitoring are being established for the RPWS in reaches of Tosh Creek that will be restored and in reaches where there will be no physical alterations to the channel.

Riparian buffers are generally broad and mostly in good condition with abundant trees in the valley wall reaches. In the upper reaches through residential areas, the riparian buffers are narrower and mature trees are less abundant. However, the steep valley slopes in the upper reaches provide a natural buffer against further development and there are sufficient deciduous trees to provide shade (Washington Trout 2005). There is a minor amount of development (4 percent) within the 30-foot stream buffer.

There are currently three fish passage barriers on Tosh Creek. One of the barriers on a left bank tributary near WLSP is a complete barrier. The other two are partial barriers on the main stem at WLSP. Significant salmonid use has been documented in Tosh Creek as far upstream as the south fork at the headwaters. Abundant gravel in the lower reach makes this stream a potentially important coho spawning stream (Washington Trout 2005).

In February 2015, the City completed the Tosh Creek Watershed Restoration Plan which identifies a comprehensive rehabilitation strategy for Tosh Creek based on modeling and engineering analyses (City of Redmond et al. 2015). The plan also provides preliminary designs for the three highest ranked projects in terms of their overall benefit to the Creek. One of these projects recently received $6,000,000 in funding through Ecology's Stormwater Financial Assistance Program (Fiscal Year 2016) and will involve the construction of a flow control vault to stabilize erosive flows in Tosh Creek and improve water quality. This vault is expected to be operational in 2016. Monitoring conducted through the RPWS will initially be performed to evaluate potential improvements to stream health from this project. For example, midpoint monitoring stations in the watershed (see descriptions below) were specifically selected to evaluate potential improvements to stream health at locations immediately downstream of the vault. With supplementation of grant and loan funding from Ecology, Redmond could potentially build all three top priority projects within 6 years (i.e., by 2021).

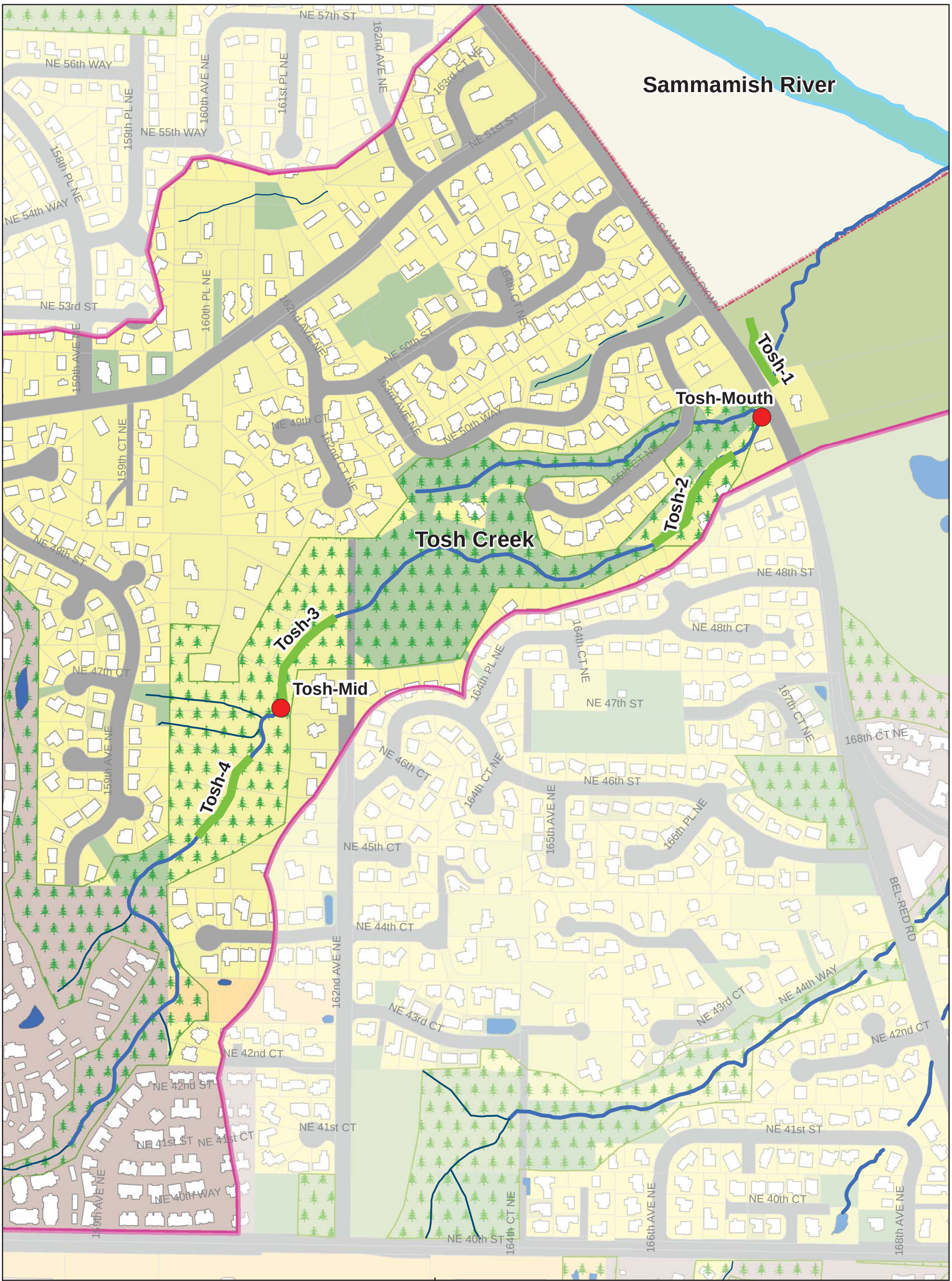


# Figure 4. Tosh Creek Paired Watershed Study Monitoring Locations.

City of Redmond, Washington

11/22/2013

N

0 0.0375 0.075 0.15 Miles

CityofRedmond WASHINGTON

Disclaimer: This map is created and maintained by the Natural Resources Division of the City of Redmond, Washington, for reference purposes only. The City makes no guarantee as to the accuracy or completeness of the features shown on this map.

**Legend**

- Class I Stream
- Class II Stream
- Class III Stream
- Class IV Stream
- Ponds
- City Limits
- Watershed Boundary
- Commercial
- Industrial
- Multifamily
- Park / Undeveloped
- Public ROW
- Single Family HighDensity
- Single Family Low Density
- Single Family Medium Density
- Single Family Rural Density
- Hydrology & WQ Monitoring
- Physical Habitat, sediment & B-IBI Monitoring

### 6.1.2. Reference Watersheds

The watersheds for Colin Creek and Seidel Creek were selected as Reference watersheds for the RPWS. Conditions within each of these watersheds are described in the following subsections.

#### 6.1.2.1. Colin Creek Watershed

Colin Creek has its headwaters in the City-owned Redmond Watershed Preserve Park (Figure 1). The Redmond Watershed Preserve Park was purchased in 1926 for a domestic water supply (City of Redmond 2011). It occupies an 800-acre parcel of land that is outside the city's contiguous limits but within the City's jurisdiction. In addition to Colin Creek, two other creeks within the city (Mackey Creek and Seidel Creek) also have their headwaters in the park. Because the City has prohibited development within the Redmond Watershed Preserve Park, it is considered one of the most pristine lowland forests in King County (Luchetti, personal communication, 2011).

Colin Creek flows north out of a large wetland through the Redmond Watershed Preserve Park, enters Welcome Lake, exits the lake over a spillway with a fishway of questionable function, and then enters a steep ravine. Colin Creek then joins Struve Creek, a left bank tributary of Bear Creek. Only 2,260 linear feet, out of a total of 29,265 linear feet, are located within city boundaries. The entire stream within the city is designated as a Class II stream. No stormwater outfalls exist along the creek.

The watershed within the city limits is 90 acres, and is 100 percent comprised of parks and undeveloped land (see Figure 5). It consists of dense stands of mature conifer forest, which provide good cover for the stream. The channel has substantial amounts of large woody debris that contribute to a diverse instream habitat.

Colin Creek is not listed on the 2008 Section 303(d) list of threatened and impaired waterbodies (Ecology 2012). B-IBI sampling was not performed by the City on Colin Creek; however, B-IBI scores from sampling conducted by King County in this watershed from 1997 through 2010 generally indicate conditions are "fair" (PSSB 2011).

Dense stands of second generation forest flank both sides of Colin creek as it meanders through the Redmond Watershed Preserve Park, north into unincorporated King County. The riparian zone is one of the most pristine in Redmond with 97 percent forest cover. The system is complex with thick vegetation providing shade for the majority of the channel. Very few invasive species are found within Colin Creek's buffers, or within the portion of its watershed located in Redmond. A large wetland complex is present in the headwaters that feed both Colin and Seidel Creek.

Neither Washington Trout or City crews officially surveyed Colin Creek for fish presence, but there are anecdotal reports of numerous cutthroat trout present. WDFW maps show coho spawning in the reach below Welcome Lake (WDFW 2011). There is one fish passage barrier within the watershed preserve.

#### 6.1.2.2. Seidel Creek Watershed

Seidel Creek has its headwaters in the Redmond Watershed Preserve Park (Figure 1). The East Fork of Seidel Creek joins the main stem within the park. The topography at the headwaters

is relatively flat with numerous wetlands, beaver dams, and ponds. The headwaters for Seidel Creek are connected with the same large wetland that is the headwater for Colin Creek. The stream flows through rural King County pasture and wood lots before it enters the left bank of Bear Creek just east of the city limits. The entire stream length is 31,121 linear feet (of which 22,220 linear feet are located within the city and 8,901 linear feet are outside the city). Approximately 13,260 linear feet of Seidel Creek within the city is designated as a Class II stream. There are no stormwater outfalls mapped along the creek.

The Seidel Creek watershed comprises 615 acres and land use is considered 100 percent parks and undeveloped land. Land cover is mostly forest (see Figure 6), and the watershed is generally undisturbed. The eastern two-thirds of the watershed was logged in the 1930s, and the western third was logged during World War II. The forest has naturally regenerated since then, being protected initially as a municipal water supply, and more recently as a natural park, with a focus on protecting its wide variety of habitats, including ponds and wetlands.

In general, water quality in Seidel Creek is good due to the low level of development. However, Ecology included the lowest 0.1 mile, in unincorporated King County, on the 2012 Section 303(d) list as a Category 5 waterbody due to high temperature (Ecology 2012). This reach is also listed as Category 2 for dissolved oxygen. B-IBI sampling was not performed by the City on Seidel Creek; however, B-IBI scores from sampling conducted by King County in this watershed from 2002 through 2010 generally indicate conditions are “fair” (PSSB 2011).

All reaches of Seidel Creek are flanked with densely wooded second growth forest. Its headwater is a large wetland complex that feeds both Seidel and Colin Creek. The upper reaches contribute to a manmade water impoundment that is flanked by wetlands and dense forest. Below the dam is also heavily wooded with some prairie within the buffer. The entire portion of Seidel Creek's Watershed within Redmond is within the Redmond Watershed Preserve and is characterized by 83 percent tree cover in the riparian zone.

A low dam backs up water below the confluence with the East Fork of Seidel Creek to create a reservoir. The reservoir was originally used as a municipal water supply but due to water quality issues was abandoned in 1953. However, this dam now represents a complete fish passage barrier. There are two other barriers upstream on the East Fork, and one partial barrier (a concrete flume) upstream on the main stem. There are large numbers of resident salmonids that use Seidel Creek, but no anadromous fish due to the fish passage barriers. This issue is being addressed with a fish passage project. No surveys of Seidel Creek were done by Washington Trout.

### 6.1.3. Control Watersheds

The watersheds for Country Creek and Tyler’s Creek were selected as Control watersheds for the RPWS. Conditions within each of these watersheds are described in the following subsections.

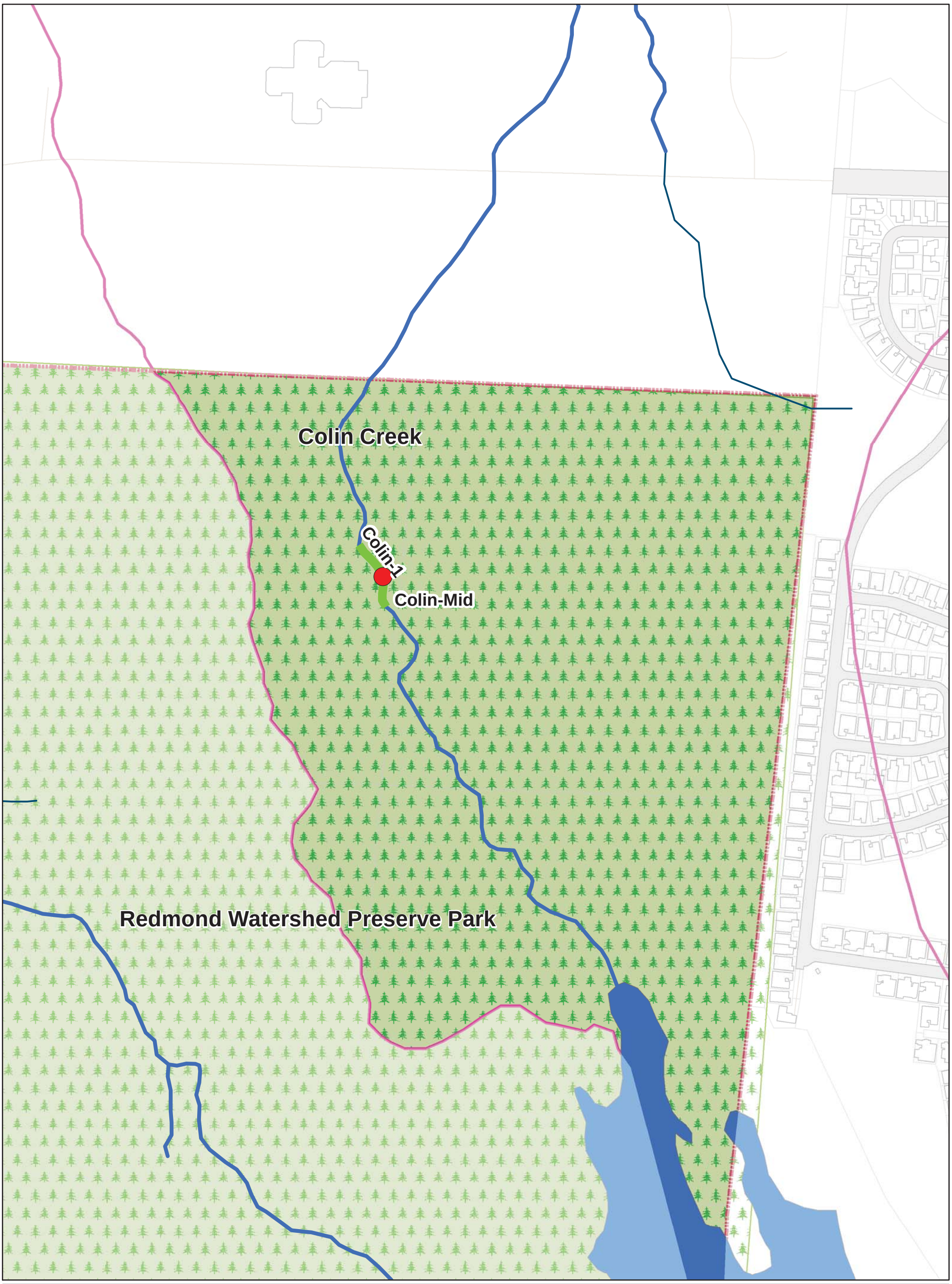


# Figure 5. Colin Creek Paired Watershed Study Monitoring Locations.

City of Redmond, Washington

6/25/2015

N

0 0.0325 0.065 0.13 Miles

Disclaimer: This map is created and maintained by the Natural Resources Division of the City of Redmond, Washington, for reference purposes only. The City makes no guarantee as to the accuracy or completeness of the features shown on this map.

## Legend

- Class I Stream
- Class II Stream
- Class III Stream
- Class IV Stream
- Ponds
- City Limits
- Watershed Boundary
- Commercial
- Industrial
- Multifamily
- Park / Undeveloped
- Public ROW
- Single Family HighDensity
- Single Family Low Density
- Single Family Medium Density
- Single Family Rural Density
- Flow & WQ Monitoring
- Habitat, sediment & Biological Monitoring

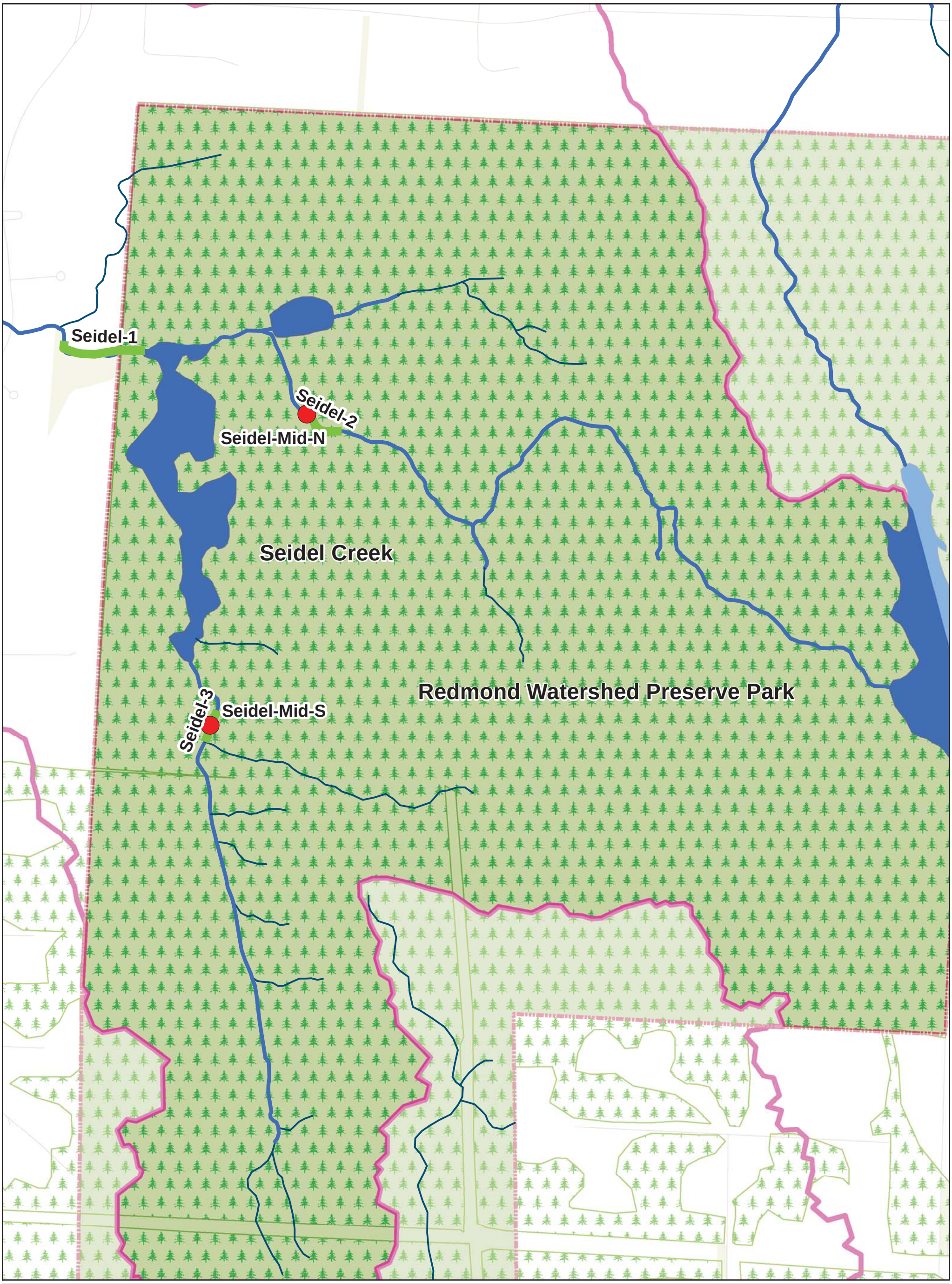


# Figure 6. Seidel Creek Paired Watershed Study Monitoring Locations.

City of Redmond, Washington

11/22/2013

N

0 0.05 0.1 0.2 Miles

CityofRedmond WASHINGTON

Disclaimer: This map is created and maintained by the Natural Resources Division of the City of Redmond, Washington, for reference purposes only. The City makes no guarantee as to the accuracy or completeness of the features shown on this map.

**Legend**

- Class I Stream
- Class II Stream
- Class III Stream
- Class IV Stream
- Ponds
- City Limits
- Watershed Boundary
- Commercial
- Industrial
- Multifamily
- Park / Undeveloped
- Public ROW
- Single Family HighDensity
- Single Family Low Density
- Single Family Medium Density
- Single Family Rural Density
- Flow & WQ Monitoring
- Habitat, Sediment & Biological Monitoring

#### 6.1.3.1. Country Creek Watershed

Country Creek is located in the southwest portion of the city (Figure 1). Country Creek enters the Sammamish River near the outlet of Lake Sammamish approximately 1,500 feet upstream of the weir. The lower reach of Country Creek on the valley floor flows through a seasonally flooded and wooded wetland complex that is backwatered from the lake. Closer to WLSP, the stream flows through stands of dense blackberry and reed canarygrass with little native vegetation. Upstream of the valley floor, the channel runs through residential neighborhoods. The headwaters of Country Creek are located in Cascade View Neighborhood Park where several springs feed the modest flow in the upper reach. A right bank tributary enters the stream just upstream of WLSP. The total stream length is 7,210 feet of which 5,000 feet are designated as a Class II stream. An average of 1.6 stormwater outfalls can be found per 1,000 feet along the creek.

The Country Creek watershed consists of 212 acres located entirely within city boundaries. The lower 800 feet of the stream channel flows through King County-owned open space property. Land use is predominantly single-family dwellings (see Figure 7). The EIS area in the watershed is 22 percent. Land cover is predominantly landscaped yards.

Country Creek is listed as a Category 5 waterbody on Ecology's 2012 Section 303(d) list due to impairment from fecal coliform bacteria (Ecology 2012). B-IBI scores for Country Creek generally indicate conditions are "poor" (PSSB 2011).

Riparian buffers are narrow in the middle reaches near WLSP, but broad in the upper reach with thick vegetation and mature conifers. On average, development encroaches on 17 percent of the 30 foot riparian buffer.

There are 10 fish passage barriers on Country Creek and the right bank tributary; six are complete barriers and four are partial barriers. The undersized culvert under WLSP is a partial barrier. The first complete barrier is on the main stem upstream of the right bank tributary. There has been no observed salmonid use in Country Creek based on surveys by Washington Trout crews (Washington Trout 2005), likely due to these multiple barriers.

#### 6.1.3.2. Tyler's Creek Watershed

Tyler's Creek is a right bank tributary of Bear Creek. It originates west of Avondale Road NE in the northeast portion of the city and flows south and east, joining Bear Creek just east of the city limits (Figure 1). Sediment loads from the steep channel on the hillside and thick vegetation combine to create a braided channel through the wetland at the base of the valley wall. The total stream length is 3,417 linear feet; 2,990 linear feet are within the city, of which 2,020 linear feet are designated as a Class II stream. An average of three stormwater outfalls can be found per 1,000 feet along the creek.

The Tyler's Creek watershed is 168 acres, and 167 acres are located in the city. Land use is predominantly single-family residential (Figure 8). There are large tracts of undeveloped land in the headwaters. Land cover is primarily landscaping (43 percent) and impervious surface (35 percent). There are a relatively high number of stormwater outfalls along Tyler's Creek (three outfalls per 1,000 linear feet).

Ecology included all of Tyler's Creek on the 2008 Section 303(d) list as a Category 5 waterbody due to high temperature (Ecology 2012). B-IBI scores for Tyler's Creek generally indicate conditions are "poor" based on data collected in 2005, 2006, and 2007 by the City as part of the Annual Benthic Monitoring study (PSSB 2011). These samples were collected from two sites west of Avondale Road NE.

Riparian buffers are in fair condition, with only 10 percent encroachment within 30 feet of the stream and well-established riparian plantings. Most of the buffers are protected within Native Growth Protection Easements (NGPEs) or tracts within the city limits. However, the protected easements are much narrower than present standards. Some upper reaches of the stream channel were rehabilitated and several fish barriers corrected, but the habitat is poor quality having uniformly sized rock, plastic fabric, and large riprap weirs.

There are two partial fish passage barriers on Tyler's Creek: a baffled culvert under Avondale Road NE and a second barrier upstream. There are two other potential barriers, one at the mouth and one near the headwaters. No significant salmonid use has been documented in Tyler's Creek, although Washington Trout crews did document salmonids upstream of Avondale Road NE (Washington Trout 2005).

## 6.2. Status and Trends Monitoring

This section describes the monitoring stations, measurement frequency, indicators, and data analysis methods that will be used for the Status and Trends Monitoring component of the RPWS. This information is organized under separate subsections for the following monitoring categories: hydrologic, water quality, physical habitat, sediment quality, and biological. The specific indicators of stream health that will be evaluated in these categories are also summarized in Table 4 with their associated measurement frequency.

### *6.2.1. Hydrologic Monitoring*

A total of 14 fixed monitoring stations will be established to facilitate hydrologic monitoring in each of the study watersheds. Per the recommendations from the literature review (see *Background* section), monitoring stations were established at the mouth and a mid-point location within each watershed where feasible given the watershed's size. The specific monitoring stations established based on this goal are as follows:

**Application Watersheds**

- Evans Creek Tributary 108: two stations designated Lower Stream Station (EVALSS) and Midstream Station (EVAMS), respectively (see locations in Figure 2).
- Monticello Creek: one station at the mouth designated Mont-Mouth (MONM); one station at the approximate midpoint of the watershed on north tributary designated Mont–Mid-N (MONMN); and one station at the approximate midpoint of the watershed on south tributary designated Mont–Mid-S (MONMS) (see locations in Figure 3).
- Tosh Creek: one station at the mouth designated Tosh-Mouth (TOSMO); and one station at the approximate midpoint of the watershed designated Tosh-Mid (TOSMI) (see locations in Figure 4).

**Reference Watersheds**

- Colin Creek: one station at the approximate midpoint of the watershed designated Colin-Mid (COLM) (see locations in Figure 5).
- Seidel Creek: one station at the approximate midpoint of the watershed on north tributary designated Seidel-Mid-N (SEIMN); one station at the approximate midpoint of the watershed on south tributary designated Seidel-Mid-S (SEIMS) (see locations in Figure 6).

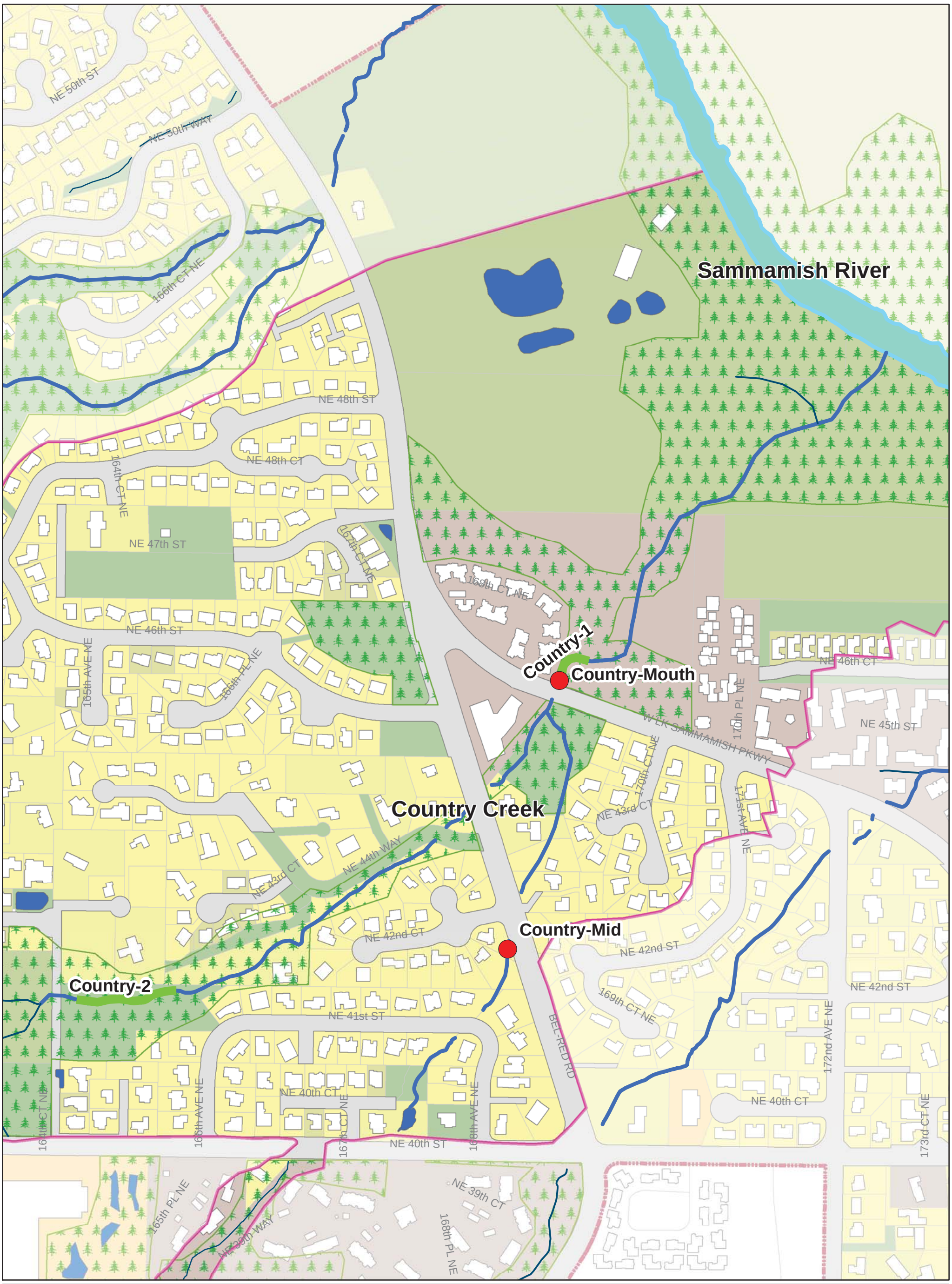


# Figure 7. Country Creek Paired Watershed Study Monitoring Locations.

City of Redmond, Washington

6/25/2015

N

0 0.0325 0.065 0.13 Miles

CityofRedmond WASHINGTON

Disclaimer: This map is created and maintained by the Natural Resources Division of the City of Redmond, Washington, for reference purposes only. The City makes no guarantee as to the accuracy or completeness of the features shown on this map.

**Legend**

- Class I Stream
- Class II Stream
- Class III Stream
- Class IV Stream
- Ponds
- City Limits
- Watershed Boundary
- Commercial
- Industrial
- Multifamily
- Park / Undeveloped
- Public ROW
- Single Family HighDensity
- Single Family Low Density
- Single Family Medium Density
- Single Family Rural Density
- Flow & WQ Monitoring
- Habitat, Sediment, & Biological Monitoring

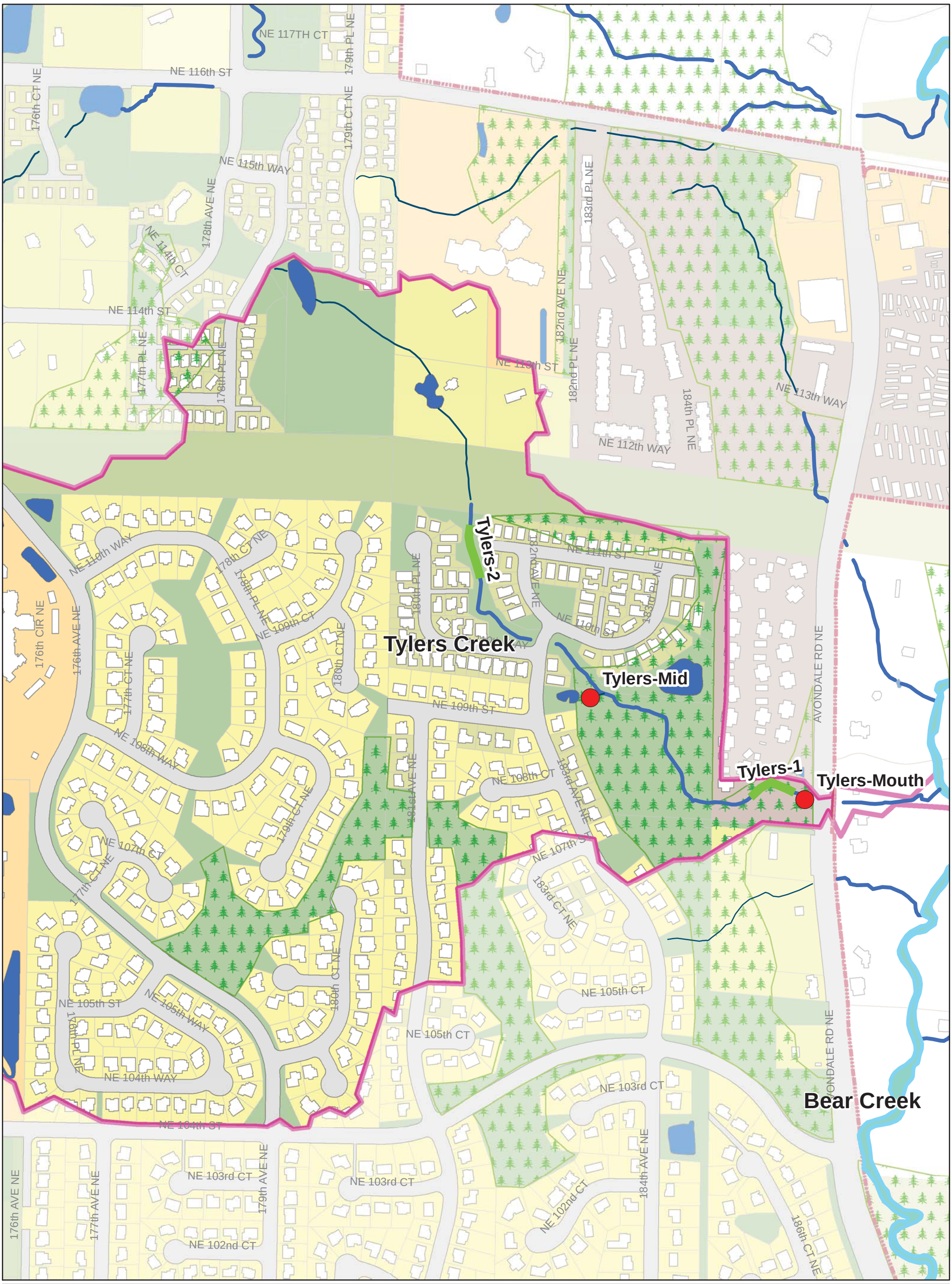


# Figure 8. Tyler's Creek Paired Watershed Study Monitoring Locations.

City of Redmond, Washington

6/25/2015

N

0 0.0375 0.075 0.15 Miles

CityofRedmond WASHINGTON

Disclaimer: This map is created and maintained by the Natural Resources Division of the City of Redmond, Washington, for reference purposes only. The City makes no guarantee as to the accuracy or completeness of the features shown on this map.

**Legend**

- Class I Stream
- Class II Stream
- Class III Stream
- Class IV Stream
- Ponds
- City Limits
- Watershed Boundary
- Commercial
- Industrial
- Multifamily
- Park / Undeveloped
- Public ROW
- Single Family HighDensity
- Single Family Low Density
- Single Family Medium Density
- Single Family Rural Density
- Flow & WQ Monitoring
- Habitat, Sediment & Biological Monitoring

| Table 4. Indicators of Stream Health for the Redmond Paired Watershed Study. | |
|---|---|
| **Indicator** | **Measurement Frequency** |
| **Hydrology Monitoring** | |
| • Flow | • Continuous |
| • High pulse count<br>• High pulse frequency<br>• High pulse count duration<br>• High pulse count range<br>• Low pulse count<br>• Low pulse count frequency<br>• Low pulse count duration<br>• Low pulse count range<br>• Richards-Baker (RB) flashiness index<br>• TQ Mean<br>• Storm volume<br>• Base volume<br>• Total flow volume | • Post-processed from continuous flow measurements |
| **Water Quality Monitoring** | |
| • Total suspended solids<br>• Turbidity<br>• Conductivity<br>• Hardness<br>• Dissolved organic carbon<br>• Fecal coliform bacteria<br>• Total phosphorus<br>• Total nitrogen<br>• Copper, total and dissolved<br>• Zinc, total and dissolved | • Twelve grab samples collected annually during storm events (three each quarter)<br>• Four grab samples collected annually during base flow (one each quarter) |
| • Temperature<br>• Conductivity | • Continuous |
| **Physical Habitat Monitoring** | |
| • Bank-full width<br>• Wetted width<br>• Cumulative bar width<br>• Bank-full depth<br>• Wetted depth<br>• Substrate class<br>• Substrate embeddedness<br>• Fish cover<br>• Thalweg depth<br>• Presence of bars<br>• Presence of edge pools<br>• Main channel slope and bearing<br>• Large woody debris tally, including notation of diameter, length, category, zone, and key-pieces | • Annually |

| Table 4 (continued). Indicators of Stream Health for the Redmond Paired Watershed Study. | |
|---|---|
| **Indicator** | **Measurement Frequency** |
| **Physical Habitat Monitoring (continued)** | |
| • Evidence of vegetation colonization below OHWM that persists more than 1 year<br>• Slopes vegetated over the crown of the bank<br>• Presence of desirable native plant species<br>• Presence of invasive plant species<br>• Presence of good-habitat indicator liverwort species<br>• Channel incision or aggradation<br>• Channel widening, narrowing, or migration<br>• Changes in channel slope, sinuousity, and/or bed-form type | • Annually |
| **Sediment Quality Monitoring** | |
| • Total organic carbon<br>• Copper<br>• Zinc<br>• Polycyclic aromatic hydrocarbons<br>• Phthalates | • Annually |
| **Biological Monitoring** | |
| • Benthic macroinvertebrates | • Annually |
| • Benthic Index of Biotic Integrity<br>• Taxa Richness<br>• Ephemeroptera Richness<br>• Plecoptera Richness<br>• Trichoptera Richness<br>• Clinger Percent<br>• Long-Lived Richness<br>• Intolerant Richness<br>• Percent Dominant<br>• Predator Percent<br>• Tolerant Percent | • Post-processed from benthic macroinvertebrate data |

OHWM: ordinary high water mark.

### Control Watersheds

- Country Creek: one station at the mouth designated Country-Mouth (COUMO); and one station at the approximate midpoint of the watershed designated Country-Mid (COUMI) (see locations in Figure 7).
- Tyler's Creek: one station at the mouth designated Tylers-Mouth (TYLMO); and one station at the approximate midpoint of the watershed designated Tylers-Mid (TYLMI) (see locations in Figure 8).

Continuous flow monitoring will occur at all 14 monitoring stations for the duration of the RPWS. Data from the continuous flow monitoring will be processed to calculate the following

indicators for evaluating hydrologic impacts from urban development as described in DeGasperi et al. (2009):

- **High pulse count**: occurrence of daily average flows that are equal to or greater than a threshold set at twice (two times) the long-term daily average flow rate.
- **High pulse frequency**: number of days each water year that discrete high flow pulses occur.
- **High pulse count duration**: annual average duration of high flow pulses during a water year.
- **High pulse count range**: range in days between the start of the first high flow pulse and the end of the last high flow pulse during a water year.
- **Low pulse count**: occurrence of daily average flows that are equal to or less than a threshold set at 50 percent of the long-term daily average flow rate.
- **Low pulse count frequency**: number of times each calendar year that discrete low flow pulses occurred.
- **Low pulse count duration**: annual average duration of low flow pulses during a calendar year.
- **Low pulse count range**: range in days between the start of the first low flow pulse and the end of the last low flow pulse during a calendar year.
- **Richards-Baker (RB) flashiness index**: a dimensionless index of flow oscillations relative to total flow based on daily average discharge measured during a water year.
- **TQ Mean**: the fraction of a year that mean daily discharge exceeds annual mean discharge.
- **Storm volume**: total discharge volume during storm events over a water year.
- **Base volume**: total discharge volume during base flow over a water year.
- **Total flow volume**: total discharge volume over a water year.

Trends over time at each monitoring station will be evaluated using parametric (Pearson's r) and nonparametric (Kendall's tau or Spearman's rho) tests of correlation between these indicators and time. Statistical significance of the correlation coefficients will be evaluated based on an $\alpha$-level of 0.05 for a one-tailed test. The pattern of interest will be evidence that receiving water conditions are improving based on the detection of statistically significant trends in the data for one or more of these indicators in the Application watersheds while these same trends are not detected in the data for the same indicators in the Reference and Control watersheds.

In addition to the correlation analyses, separate analyses will be performed to compare measured flows in Tosh Creek and Monticello Creek to modeled flows for forested and existing conditions (i.e., conditions when the models were developed) that were derived from hydrologic models that have been developed for these watersheds using the Hydrological Simulation Program—Fortran (HSPF). For these analyses, local rainfall data collected concurrently with the measured flows will serve as model input for predicting flows for

forested and existing conditions. Using a custom program described in the *Data Management and Documentation Procedures* section, both the measured and modeled flows will be post-processed to delineate individual periods of base and storm flow, respectively, across the entire time series for a given water year. Separate statistical analyses (Paired Wilcoxon signed rank tests or Paired T-tests) will then be performed to determine if measured peak flows and flow volumes, respectively, during storm flow are significantly different from modeled flows for either the forested and existing conditions. Statistical significance in these tests will be evaluated based on an $\alpha$-level of 0.05 for a one-tailed test. If watershed rehabilitation efforts are effective, measured peak flows and flow volumes should depart from the modeled equivalent for existing conditions and more closely resemble those for forested conditions.

### 6.2.2. Water Quality Monitoring

A total of 14 fixed monitoring stations will be established to facilitate water quality monitoring in each of the study watersheds. These stations will be co-located with the monitoring stations described above for hydrologic monitoring (see Figures 2 through 7). Twelve grab samples will be collected annually during storm events (three each quarter) at all 14 monitoring stations for the duration of the RPWS. In addition, four grabs samples will also be collected annually during base flow (one each quarter) at these stations. Each sample will be analyzed for the following indicators for evaluating water quality impacts from urban development:

- Total suspended solids
- Turbidity
- Conductivity
- Hardness
- Dissolved organic carbon
- Fecal coliform bacteria
- Total phosphorus
- Total nitrogen
- Copper, total and dissolved
- Zinc, total and dissolved

In addition, the following indicators will be continuously measured *in situ* at each station using probes:

- Temperature
- Conductivity

Trends over time at each monitoring station will be evaluated using parametric (Pearson's r) and nonparametric (Kendall's tau or Spearman's rho) tests of correlation between these indicators and time. Where possible, variation in the indicator data related to changes in

stream flow will be removed prior to performing the correlation analyses using methods described in Helsel and Hirsch (2002). Use of these methods is generally applicable for indicators that tend to increase (or decrease) as a function of flow (e.g., total suspended solids). By removing this variation, trends in the indicator data can be more readily detected in the correlation analyses. In all cases, statistical significance of the correlation coefficients will be evaluated based on an $\alpha$-level of 0.05 for a one-tailed test.

The sample frequency identified above for water quality monitoring was evaluated using power tests that were performed for totals suspended solids and total zinc. Power tests are used to determine the probability of detecting a trend given: 1) sample size, 2) the desired $\alpha$-level, 3) magnitude of the trend, and 4) amount of variation within the data. With 16 samples collected annually (12 samples during storm events and 4 samples during base flow) over a 10-year period and a desired $\alpha$-level of 0.05, results from these tests showed there was a 66 to 100 percent probability of detecting a 4 milligram per liter (mg/L) decrease in total suspended solids concentrations depending on the variability that is assumed for the data and characteristics of the trend over time (i.e., linear or non-linear). These same tests showed there is a 38 to 100 percent probability of detecting a 2 microgram per liter ($\mu$g/L) decrease in total zinc concentrations. Results from these tests are documented in Appendix A of this QAPP.

Annual mass load estimates will also be derived for the following subset of indicators using the nonparametric "smearing" approach described in Helsel and Hirsch (2002): total suspended solids, total phosphorus, total nitrogen, total copper, and total zinc. Trends over time at each monitoring station will again be evaluated using parametric (Pearson's r) and nonparametric (Kendall's tau or Spearman's rho) tests of correlation between these mass load estimates and time. Statistical significance of the correlation coefficients will be evaluated based on an $\alpha$-level of 0.05 for a one-tailed test. These analyses will be used to detect potential improvement in receiving water conditions from the combined effects of improved water quality and reduced stormwater runoff.

In all cases, the pattern of interest will be evidence that receiving water conditions are improving based on the detection of statistically significant trends in the data for one or more of these indicators in the Application watersheds while the same trends are not detected in the data for the same indicators in the Reference and Control watersheds.

### 6.2.3. Physical Habitat Monitoring

A total of 19 fixed monitoring stations will be established to facilitate physical habitat monitoring in each of the study watersheds as follows:

**Application Watersheds**

- Evans Creek Tributary 108: two stations designated Lower Stream Station (EVALSS) and Midstream Station (EVAMS), respectively (see locations in Figure 2).
- Monticello Creek: five stations designated Mont-1, Mont-2, Mont-3, Mont-4, and Mont-5, respectively (see locations in Figure 3).
- Tosh Creek: four stations designated Tosh-1, Tosh-2, Tosh-3, and Tosh-4, respectively (see locations in Figure 4).

**Reference Watersheds**

- Colin Creek: one designated Colin-1 (see locations in Figure 5).
- Seidel Creek: three stations designated Seidel-1, Seidel-2, and Seidel-3, respectively (see locations in Figure 6).

**Control Watersheds**

- Country Creek: two stations designated Country-1 and Country-2, respectively (see locations in Figure 7).
- Tyler's Creek: two stations designated Tylers-1 and Tylers-2, respectively (see locations in Figure 8).

Per the recommendations from the literature review (see *Background* section), monitoring stations were established in reaches that will be restored and in reaches where there will be no physical alterations to the channel. The following monitoring stations were specifically selected to capture reaches that have either been recently restored or are likely to be restored in the future:

- Mont-3
- Mont-4
- Mont-5
- Tosh-1
- Tosh-3
- Tosh-4

Physical habitat monitoring will be conducted annually at each monitoring station for the duration of the RPWS. The characteristic bed-form type will be recorded at each monitoring station as a whole, and physical habitat quality indicators will be measured at 11 cross-sections (transects) and thalweg (line of steepest descent along the streambed) profile for each habitat monitoring station.

The following indicators will be measured at each transect:

- Bank-full width, wetted width, and cumulative bar width
- Bank-full depth, wetted depth, substrate class and embeddedness at 11 or more stations across the section
- Fish cover
- Human influence
- Riparian shading
- Riparian vegetation structure
- Presence of desirable/undesirable plant species

The following indicators will be measured along the thalweg profile:

- Thalweg depth and the presence of bars and/or edge pools
- Large woody debris and habit unit descriptions
- Side-channel descriptions
- Main channel slope and bearing
- Presence, source, size, of culvert or pipes draining to creek

Post-processing of recorded physical habitat indicators will allow monitoring of:

- Channel incision or aggradation
- Channel widening, narrowing, or migration
- Changes in channel slope, sinuousity, and/or bed-form type

The pattern of interest will be evidence that receiving water conditions are improving based on the detection of trends in the data for one or more of these indicators in the Application watersheds while the same trends are not detected in the data for the same indicators in the Reference and Control watersheds.

### 6.2.4. Sediment Quality Monitoring

A total of 19 fixed monitoring stations will be established to facilitate sediment quality monitoring in each of the study watersheds. These stations will be co-located with the monitoring stations described above for physical habitat monitoring (see Figures 2 through 7). Sediment samples will be collected annually at all 19 monitoring stations for the duration of the RPWS. Each sample will be analyzed for the following indicators for evaluating sediment quality impacts from urban development:

- Total organic carbon
- Copper
- Zinc
- Polycyclic aromatic hydrocarbons
- Phthalates

Trends over time at each monitoring station will be evaluated using parametric (Pearson's r) and nonparametric (Kendall's tau or Spearman's rho) tests of correlation between these indicators and time. Statistical significance of the correlation coefficients will be evaluated based on an $\alpha$ level of 0.05 for a one-tailed test. The pattern of interest will be evidence that receiving water conditions are improving based on the detection of statistically significant trends in the data for one or more of these indicators in the Application watersheds while the same trends are not detected in the data for the same indicators in the Reference and Control watersheds.

### 6.2.5. Biological Monitoring

A total of 19 fixed monitoring stations will be established to facilitate biological monitoring in each of the study watersheds. These stations will be co-located with the monitoring stations described above for physical habitat monitoring (see Figures 2 through 7). Benthic macroinvertebrate samples will be collected annually at each monitoring station for the duration of the RPWS. Each sample will be processed to calculate the following indicators for use in evaluating stream health:

- Benthic Index of Biotic Integrity (B-IBI)
- Taxa Richness
- Ephemeroptera Richness
- Plecoptera Richness
- Trichoptera Richness
- Clinger Percent
- Long-Lived Richness
- Intolerant Richness
- Percent Dominant
- Predator Percent
- Tolerant Percent

Trends over time at each monitoring station will be evaluated using parametric (Pearson's r) and nonparametric (Kendall's tau or Spearman's rho) tests of correlation between these indicators and time. Statistical significance of the correlation coefficients will be evaluated based on an $\alpha$-level of 0.1 for a one-tailed test. The pattern of interest will be evidence that receiving water conditions are improving based on the detection of statistically significant trends in the data for one or more of these indicators in the Application watersheds while the same trends are not detected in the data for the same indicators in the Reference and Control watersheds.

The sampling frequency identified above for biological monitoring was evaluated using the power tests described above in the *Water Quality Monitoring* subsection. With samples collected annually over a 10-year period and a desired $\alpha$-level of 0.05, results from these tests showed there was a 63 to 96 percent probability of detecting a 9-unit increase in B-IBI scores (equivalent to a change from "fair" to "good" in biological condition) depending on the variability that is assumed for the data and characteristics of the trend over time (i.e., linear or non-linear). Results from these tests are documented in Appendix A of this QAPP.

## 6.3. Effectiveness Monitoring

As described above, roving stations will be established for the Effectiveness Monitoring component of the RPWS to verify specific structural stormwater controls are constructed properly and performing as designed. The roving stations will be moved from one year to the

next once a facility's effectiveness has been verified and new facilities come online. The specific types of monitoring to be performed at each roving station will depend on the type of structural stormwater control that is being evaluated. For example, it is anticipated that only hydrologic monitoring would be performed at roving stations for facilities that are only designed for flow control (e.g., vaults). In these cases, a facility's performance would be verified based on comparisons of measured flow from the roving station to the facility's predicted flow based on models used in its design. For facilities that are designed for runoff treatment, monitoring will follow guidelines from Ecology's Technology Assessment Protocol-Ecology (TAPE) (Ecology 2011) and include both hydrologic (e.g., influent and effluent flow) and water quality monitoring. In these cases, a facility's performance would be verified based on comparisons of its measured pollutant removal efficiency relative to targets that are identified in TAPE for specific treatment categories.

At present, no new structural stormwater controls have come online in an Application watershed that are suitable for Effectiveness Monitoring. For planning purposes, it is anticipated that two separate facilities will be completed and made available for monitoring in years 2 and 3 of the study, respectively. For each facility, detailed information on the procedures that will be used for data collection, quality assurance and control, management, and analysis will be provided in separate addendums to this QAPP.

# 7. Sampling Procedures

This section describes field sampling procedures to be employed for the RPWS. It begins with an overview of safety procedures that will be employed during all field sampling. Separate subsections then describe the specific field sampling procedures to be employed for the following monitoring categories: hydrologic, water quality, physical habitat, sediment quality, and biological. To ensure data obtained for the RPWS are of comparable to those collected through other RSMP monitoring efforts, field sampling procedures identified for this study have generally been adopted from the *Quality Assurance Project Plan for Status and Trends Monitoring of Small Streams in the Puget Lowlands Ecoregion* (Ecology 2014c).

## 7.1. Safety

Most field activities will be conducted by two people. Routine hydrologic monitoring station maintenance will generally be performed by one person. If access to private property is required, permission will be obtained from the property owner prior to any field activities. Sampling activities may take place at all hours of the day. Therefore, a designated contact person will be notified by the field personnel prior to and upon completion of sampling.

Care should be taken in the field when handling sample bottles containing preservatives (e.g., nitric acid, sulfuric acid) or when adding preservative (i.e., denatured ethanol) to biological samples immediately following collection.

## 7.2. Hydrologic Monitoring

Continuous monitoring of discharge will be performed over the anticipated 10-year timeframe for implementing the RPWS at each of the stations identified in Figures 2 through 7 for hydrologic monitoring. To facilitate this monitoring, a staff gauge will be installed at each station for obtaining a manual measurement of water level at a fixed location within the stream channel. The staff gauge may be a visible graduated scale or a designated constructed point over the water from which to measure the water level. A data logger and pressure transducer will also be installed at each station to facilitate the continuous collection of water level data with a 5-minute logging interval. The pressure transducer will be housed in a vandal-resistant stilling well submerged within the stream channel. Where feasible, telemetry will be installed to allow remote data acquisition. Typical installation configurations for the hydrologic monitoring equipment are shown in Appendix B. Specifications for the pressure transducer and data logger that will be used for this application are provided in Appendix C.

Site visits will be performed every 4 to 8 weeks to check the operational status of the data loggers at each monitoring location, download the associated water level data and make measurements. Downloaded data files will be named with the programmed site name plus the date as _YYYY_MM_DD. Field downloaded data files and telemetered data files will be stored in directories on a King County network server managed by King County Department of Information and Technology Services. Field notes and workup materials will be stored in paper files in the KCDNRP gauging program Seattle office work area. Software applications developed by KCDNRP gauging program will be used to input data to the KCDNRP Hydrologic

Information Center database. Once in the database, data is available for download from the County internet site.

The data collected and processed by King County will be available for transfer to a secure server located in Herrera's Seattle office that is backed-up on a daily basis. The AQUARIUS Time-Series software will then be used for all subsequent tasks related to the processing and analysis of the compiled water level data.

To convert the water level data to estimates of discharge, stream discharge rating curves will be developed for each monitoring station based on manual measurements of discharge that are made over a range of flows. It is anticipated that ongoing manual measurements of discharge will be obtained for each station to facilitate rating curve development. Effort will be made to measure flows at the high and low extremes. Procedures for making manual measurements of discharge will generally follow those identified Standard Operating Procedure for Measuring and Calculating Stream Discharge – EAP056 (Ecology 2014d).

KCDNRP gauging staff will develop stream discharge rating curves using USGS protocols from the manual measurements of discharge at each monitoring station. The development and application of rating curves will be aided by installing a stream gauge at a location with a stable hydraulic control. For example, at the following six stations the gauge location is upstream of an existing weir, flume, or culvert that provides a stable hydraulic control:

- MONM – thin plate weir
- MONMS – culvert
- TOSHMO – concrete weir
- SEIMN – concrete weir
- SEIMS – concrete flume
- TYLMO – thin plate weir

The remaining stations rely on natural channel features that may shift over time. Rating curve shifts will be applied based on the results of the ongoing discharge measurements. Rating curve development and applied data corrections will be documented and reviewed.

## 7.3. Discrete Water Quality Sampling

Water quality monitoring will involve the collection of twelve grabs samples annually during storm events (three each quarter) at all 14 monitoring stations to be established for this purpose (see *Experimental Design* section). In addition, four grabs samples will also be collected annually during base flow (one each quarter) at these stations. Sample collection procedures will generally follow those identified in the *Quality Assurance Project Plan for Status and Trends Monitoring of Small Streams in the Puget Lowlands Ecoregion* (Ecology 2014c). Specifically, the following procedures identified in Ecology (2014b) will be followed where applicable:

- Appendix E-1: Day of sample collection
- Appendix E-2: Water quality sample containers
- Appendix E-3: Water quality sample processing and preservation

Specific deviations from these procedures for discrete water quality sampling to be performed for the RSMP will be limited to the following:

- Table 5 identifies the applicable parameters and water quality sample collection requirements that will be used for the RSMP including analytical methods, sample containers, holding times, sample preservation, and reporting limits.
- In situ measurements with field meters for the RSMP will be only be performed for dissolved oxygen, temperature, and conductivity.

To collect samples during storm events, antecedent conditions and storm predictions will be monitored via the Internet; and a determination will be made as to whether to target an approaching storm for sampling. The following criteria will serve as guidelines for defining the acceptability of specific storm events for sampling:

- **Target storm depth**: A minimum of 0.25 inches of precipitation over a 24-hour period
- **Antecedent conditions**: A period of at least 24 hours preceding the event with less than 0.04 inches of precipitation

Once a storm event has been targeted for sampling, the laboratory will be given prior notice of a pending sampling event to ensure that adequate laboratory staff will be available to process the incoming samples.

Nominally, all 14 stations will be sampled during each storm event. Once deployed, sampling personnel will maintain communication with Herrera's Monitoring Coordinator (see *Organization and Key Personnel* section) who will have access to real-time Doppler radar images showing the distribution of rainfall in the watersheds and the surrounding region. If rainfall appears to be unevenly distributed among the sampling locations in the watersheds, or if the rainfall appears to be dissipating prior to the completion of the required sampling, the Herrera Project Manager will be notified and a determination will be made as to whether the sampling event should be terminated. In the event specific stations are not sampled because a sampling event was terminated, they will be prioritized for sampling in subsequent events to ensure the annual sampling goals that have been established for the study are ultimately met for every station.

Base flow samples will be collected following a period of at least 48 hours without rain. All 14 stations will be sampled on the same day during base flow events.

## 7.4. Continuous Water Quality Monitoring

Continuous monitoring of water temperature and conductivity will be performed over the anticipated 10-year timeframe for implementing the RPWS at each of the stations identified in Figures 2 through 7 for hydrologic monitoring. The measurements will be made by commercially available manufactured instruments such as the Onset U24 conductivity logger or the Instrumentation Northwest AquiStar® CT2X conductivity and temperature sensor. These sensors have internal data logging capability that will be used to collect the continuous data with a 15 minute logging interval. At stations with telemetry, additional temperature or conductivity sensors will be interfaced with the station data logger where feasible. Specifications for the water quality sensors that will be used for this application are provided in Appendix C. The sensors will be placed in the main channel in in flowing water. The sensor placement may need to be adjusted throughout the year to maintain a position in representative flow.

During the routine site visits performed every 2 to 5 weeks, the water quality sensors will be downloaded, repositioned, and point water temperature and conductivity measurements will be made with hand held instruments such as the YSI Pro 2030. Downloaded data files will be named with the programmed site name (SSSS) plus the date as _YYYY_MM_DD and _K for conductivity, e.g., MONM_2015_10_01_K. Field downloaded data files and telemetered data files will be stored in directories on a King County network server managed by King County Department of Information and Technology Services. Field notes and workup materials will be stored in paper files in the KCDNRP gauging program Seattle office work area. Software applications developed by KCDNRP gauging program will be used to input data to the KCDNRP Hydrologic Information Center database. Once in the database, data is available for download from the County internet site.

## 7.5. Physical Habitat Monitoring

Physical habitat monitoring will occur annually at all 19 monitoring stations to be established for this purpose (see *Experimental Design* section). Physical habitat monitoring procedures will largely follow those identified in the *Quality Assurance Project Plan for Status and Trends Monitoring of Small Streams in the Puget Lowlands Ecoregion* (Ecology 2014c). Following procedures identified in Appendix C-1 of this document, the characteristic bed-form type will be recorded at each habitat monitoring station as a whole, and physical habitat quality indicators will be measured at 11 transects and one thalweg profile for each monitoring station.

The following specific procedures for assessing physical habitat will be implemented at each transect:

- Appendix C-5: Bank measurements at major transects in waded streams
- Appendix C-6: Substrate and depth measurements at major transects in waded streams
- Appendix C-7: Shade measurements at major transects in waded streams
- Appendix C-8: Estimating fish cover at major transects in waded streams
- Appendix C-9: Human influence at major transects in waded streams
- Appendix C-10. Riparian vegetation structure at major transects in waded streams

The following procedures for assessing physical habitat will also be implemented along the thalweg profile:

- Appendix C-11: Measuring thalweg depth in waded streams
- Appendix C-12: Large woody debris tally for waded streams of western Washington
- Appendix C-13: Habitat unit descriptions along the main channel thalweg
- Appendix C-14: Side-channel descriptions
- Appendix C-15: Width and substrate measurements at minor transects in waded streams
- Appendix C-16: Measuring slope and bearing in small streams

**Table 5. Sample Collection Requirements.**

| Parameter | Analytical Method | Method Number[a] | Sample Container | Pre-Extraction Holding Time | Analytical Holding Time[c] | Sample Preservation | Reporting Limit | Units |
|---|---|---|---|---|---|---|---|---|
| **Water Analyses** | | | | | | | | |
| Total suspended solids | Gravimetric, dried at 103–105°C | SM 2540D | 1 L HDPE | NA | 7 days | Cool ≤ 6°C | 1 | mg/L |
| Turbidity | Nephelometric | EPA 180.1 | 500 mL HDPE | NA | 48 hours | | 0.5 | NTU |
| Hardness | ICP/calculation | EPA 200.7/ SM 2340B | 500 mL HDPE[b] | NA | 6 months | $HNO_3$ to pH < 2, cool ≤ 6°C | 1.0 | mg/L |
| Dissolved organic carbon | High temperature combustion | SM 5310B | 125 mL glass | NA | 28 days | Filter (0.45 µm), HCL to pH < 2, cool to ≤ 6°C | 1 | mg/L |
| Fecal coliform bacteria | Membrane filtration | SM 9222D | 250 mL autoclaved | NA | 24 hours (Hallock 2007) | Cool to < 10°C | 1 | cfu/100 mL |
| Total phosphorus | Ascorbic Acid | EPA 365.1 | 500 mL HDPE | NA | 28 days | $H_2SO_4$ to pH< 2, cool ≤ 6°C | 0.005–0.01 | mg/L |
| Total nitrogen | In-line UV/persulfate digestion and oxidation with flow injection | SM 4500 N-B | | | | | 0.025–0.1 | |
| Copper, dissolved | ICP-MS | EPA 200.8 | 500 mL HDPE | NA | 180 days | Field filter (0.45 µm), $HNO_3$ to pH < 2, cool to ≤ 6°C | 1.0 | µg/L |
| Copper, total | | | 500 mL HDPE[b] | | | $HNO_3$ to pH < 2, cool to ≤ 6°C | | |
| Zinc, dissolved | | | 500 mL HDPE | | | Field filter (0.45 µm), $HNO_3$ to pH < 2, cool to ≤ 6°C | 5.0 | |
| Zinc, total | | | 500 mL HDPE[b] | | | $HNO_3$ to pH < 2, cool to ≤ 6°C | | |
| **Sediment Analyses** | | | | | | | | |
| Total organic carbon | Combustion | EPA 9060A | 4 oz glass jar | NA | 14 days | Cool ≤ 6°C | 0.1 | percent |
| Copper | ICP-MS | EPA 6020 | | | 180 days | | 0.5 | mg/kg |
| Zinc | | | | | | | 5.0 | mg/kg |
| Polycyclic aromatic hydrocarbons | Gas chromatography/mass spectrometry (GC/MS) | EPA 8270D | 8 oz glass jar | 14 days | 40 days | | 70 | µg/kg |
| Phthalates | | | | | | | 70–250 | µg/kg |
| **Biological Analyses** | | | | | | | | |
| Macroinvertebrate | Taxonomic Identification | NA | 3.8 L wide-mouth poly jar | NA | Indefinite | Field preserve with ethanol, store in quiescent location | NA | NA |

[a] SM method numbers are from APHA et al. (1998); EPA method numbers are from US EPA (1983, 1984). The 18th edition of *Standard Methods for the Examination of Water and Wastewater* (APHA et al. 1992) is the current legally adopted version in the *Code of Federal Regulations*.

[b] Hardness, total copper, and total zinc analyses performed from one 500-mL HDPE bottle.

[c] Holding time specified in US EPA guidance (US EPA 1983, 1984) or referenced in APHA et al. (1992) for equivalent method.

C = Celsius.
CFU/100 mL = colony forming units per 100 milliliters.
GC/MS = gas chromatography/mass spectrometry.
HDPE = High-Density Polyethylene.
ICP = inductively coupled plasma/atomic emission spectroscopy.
ICP-MS = inductively coupled plasma/mass spectrometry.
mg/L = milligrams per liter.
mg/kg = milligrams per kilogram.
µg/L = micrograms per liter.
µg/kg = micrograms per kilogram
NTU = Nephelometric Turbidity Units.
NA = not applicable.
oz = ounces.

Stream hydrology has very limited influence on overall riparian cover or tree cover (compared to other factors – site history, vegetation management) so neither is likely to be responsive to watershed-level hydrologic restoration. In addition to the methods and indicators proposed in Appendix C-10 of the *Quality Assurance Project Plan for Status and Trends Monitoring of Small Streams in the Puget Lowlands Ecoregion* (Ecology 2014c), supplemental monitoring will be implemented that is calibrated to the range of conditions in Redmond and can differentiate between "good" and "impaired" vegetation states that are more likely to be responsive to watershed-level restoration activities.

This monitoring consists of recording following indicators at each cross-section:

- Evidence of vegetation colonization below the ordinary high water mark (OHWM) that persists more than 1 year
- Slopes vegetated over the crown of the bank
- Presence of desirable native plant species (e.g., cottonwood, willow)
- Presence of invasive plant species (e.g., reed-canarygrass)
- Presence of good-habitat indicator liverwort species

Physical habitat monitoring will occur in the July through September timeframe when riparian foliage has had a chance to re-establish after winter lows.

## 7.6. Sediment Quality Monitoring

Sediment samples will be collected annually at all 19 monitoring stations to be established for this purpose (see *Experimental Design* section). Sample collection procedures will follow those identified in Appendix C-4 of the *Quality Assurance Project Plan for Status and Trends Monitoring of Small Streams in the Puget Lowlands Ecoregion* (Ecology 2014c); however, the suite of parameters to be analyzed for the RSMP deviates somewhat from those identified in Appendix C-4. Table 5 identifies the specific parameters to be analyzed for the RPWS with the associated water quality sample collection requirements including analytical methods, sample containers, holding times, sample preservation, and reporting limits.

Sediment sampling will occur in the May through June timeframe when flows in the creeks have dissipated from winter highs.

## 7.7. Biological Monitoring

Biological monitoring will occur annually at all 19 monitoring stations to be established for this purpose (see *Experimental Design* section). Biological monitoring procedures will follow procedures identified in Appendix D-1 of the *Quality Assurance Project Plan for Status and Trends Monitoring of Small Streams in the Puget Lowlands Ecoregion* (Ecology 2014c). Table 5 also summarizes applicable biological sample collection requirements including sample containers and sample preservation.

Prior to monitoring, the necessary permit for sampling macroinvertebrates will be obtained from the Washington Department of Fish and Wildlife (http://wdfw.wa.gov/licensing/scp/). Biological monitoring will occur in the July through September timeframe due to the following

considerations: allows time for the stream environment to stabilize following natural disturbances (e.g., spring floods); targets a period when many macroinvertebrates reach body sizes that can be readily identified; and targets periods when benthic macroinvertebrate species diversity reaches a maximum prior to fall emergence.

## 7.8. Rainfall Monitoring

Continuous monitoring of rainfall will be performed at three locations over the anticipated 10-year timeframe for implementing the RPWS. Tipping bucket rain gauges with data logging capability will be used to collect the continuous data. Data collected will be the time of each tip and 15-minute accumulations. The stations will have telemetry and additional temperature barometric pressure sensors that will record at 15-minute intervals. The atmospheric sensors are not intended to provide research quality data, but to provide context to the main hydrologic data. Barometric pressure data will be used to adjust the readings from any sealed pressure transducers deployed to measure water level. Specifications for the meteorological sensors that will be used for this application are provided in Appendix C.

Rain gauge stations will be visited three times annually. During the routine site visits the rain gauge will be cleaned and the calibration checked. The data loggers will be downloaded. Downloaded data files will be named with the programmed site name (SSSS) plus the date as _YYYY_MM_DD. Field downloaded data files and telemetered data files will be stored in directories on a King County network server managed by King County Department of Information and Technology Services. Field notes and workup materials will be stored in paper files in the KCDNRP gauging program Seattle office work area. Software applications developed by KCDNRP gauging program will be used to input data to the KCDNRP Hydrologic Information Center database. Once in the database, data is available for download from the County internet site.

# 8. Measurement Procedures

## 8.1. Water and Sediment Data

Laboratory analytical procedures for this project will follow US Environmental Protection Agency (US EPA) approved methods (APHA et al. 1992; US EPA 1983, 1984, 1986; ASTM 2007). These methods provide reporting limits that allow low-level pollutant concentrations in water and sediment samples to be compared to applicable state and federal regulatory criteria or guidelines. The preservation methods, analytical methods, reporting limits, and sample holding times are presented in Table 5.

Samples for the parameters requiring filtration (dissolved metals and dissolved organic carbon) will be immediately filtered and preserved in the field during sample collection in accordance with procedures identified in Appendix E-1 of the *Quality Assurance Project Plan for Status and Trends Monitoring of Small Streams in the Puget Lowlands Ecoregion* (Ecology 2014c).

The laboratory identified for this project will be certified by Ecology and participate in audits and inter-laboratory studies by Ecology and the US EPA. These performance and system audits have verified the adequacy of the laboratory's standard operating procedures, which include preventive maintenance, data reduction, and quality assurance/quality control (QA/QC) procedures.

The laboratory will report the analytical results within an anticipated 30- to 40-day timeframe from receipt of the samples. The laboratory will provide all sample and quality control data in standardized reports that are suitable for evaluating the project data. Submittals will include all raw data, including but not limited to:

- All raw values including those below the reporting limit and between the method detection limit and the laboratory reporting limit.
- The laboratory method detection limits and reporting limits for all analytes for each batch.
- All field duplicate and laboratory split results.

Data are to be submitted in hard copy and electronically using one of the following file formats: a MS Excel (version 97 or later) spreadsheet, Access database table (version 97 or later), or a dBase IV database table. The reports will also include a case narrative summarizing quality assurance sample performance and any problems encountered in the analysis.

## 8.2. Biological Data

Taxonomic identification will be conducted by a laboratory that employs taxonomists certified by the Society for Freshwater Science at the genus level with experience with the

freshwater macroinvertebrates of the Pacific Northwest. Taxonomic lab sampling will be performed using procedures identified in Appendix D-2 of the *Quality Assurance Project Plan for Status and Trends Monitoring of Small Streams in the Puget Lowlands Ecoregion* (Ecology 2014c). Taxonomic level of effort will also follow guidance from Appendices I and J from this same document.

# 9. QUALITY CONTROL

Quality control procedures are identified in separate subsections below for field and laboratory activities. The overall objective of these procedures is to ensure that data collected for this project are of a known and acceptable quality.

## 9.1. Field Quality Control Procedures

Quality control procedures that will be implemented for field activities are described in the following subsections. The frequency and type of quality control samples to be collected in the field are also summarized in Tables 6 and 7 for water and sediment quality samples, respectively.

### *9.1.1. Instrument Maintenance and Calibration*

Portable electronic field instruments will be used to measure water temperature and conductivity. Direct measurements of streamflow require an instrument to measure water velocity. The instrument manufacturers give direction for the maintenance and calibration of the instruments.

#### *9.1.1.1. YSI Pro 2030*

The YSI Pro Model 2030 will be used to make *in situ* measurements of water temperature and conductivity. The instruments calibration for temperature is robust and cannot be changed. Two point calibrations of conductivity with a KCL solution are recommended. The following maintenance and calibration procedures will be followed for the conductivity sensor:

- Monthly: Check instrument batteries. Clean conductivity cells with soap and water and appropriate brush.
- Four-month interval: Calibrate conductivity following the procedure in the instrument manual. Use distilled water and 1,000 µS standard.
- Annually: Verify temperature calibration using and ice bath and room temperature water bath measured with NIST traceable laboratory thermometer.

#### *9.1.1.2. Water Velocity Instruments*

The Swoffer Model 3000 Current Velocity indicator can be used with a variety of sensors, including various sized horizontal axis sensors and the USGS style pygmy and AA meters. Each has a specific calibration number to convert rotations to velocity. Before each measurement, the calibration number and sensor type will be noted. In addition, a spin test will be performed and the results noted.

The Hach FH950 Portable Velocity Flow Meter use an elector-magnetic sensor to determine current velocity. Prior to each field trip, the battery status will be checked. The sensor will also be cleaned after each field trip.

**Table 6. Quality Assurance Requirements and Anticipated Number of Water Quality Samples per Water Year.**

| Parameter | Number of Stations | Storm Samples per Quarter per Station | Base Flow Samples per Quarter per Station | Total Number of Samples Annually | Laboratory Method Blanks | Laboratory Control Standard | Matrix Spike | Field Duplicates | Lab Duplicates | Total Number of Samples Including Field Duplicates |
|---|---|---|---|---|---|---|---|---|---|---|
| Total suspended solids | 14 | 3 | 1 | 224 | 1/batch[a] | 1/batch[a] | NA | 16[b] | 1/batch[a] | 240 |
| Turbidity | 14 | 3 | 1 | 224 | 1/batch[a] | 1/batch[a] | NA | 16[b] | 1/batch[a] | 240 |
| Hardness | 14 | 3 | 1 | 224 | 1/batch[a] | 1/batch[a] | 1/batch[a] | 16[b] | 1/batch[a] | 240 |
| Dissolved organic carbon | 14 | 3 | 1 | 224 | 1/batch[a] | 1/batch[a] | 1/batch[a] | 16[b] | 1/batch[a] | 240 |
| Fecal coliform bacteria | 14 | 3 | 1 | 224 | 1/batch[a] | NA | NA | 16[b] | 1/batch[a] | 240 |
| Total phosphorus | 14 | 3 | 1 | 224 | 1/batch[a] | 1/batch[a] | 1/batch[a] | 16[b] | 1/batch[a] | 240 |
| Total nitrogen | 14 | 3 | 1 | 224 | 1/batch[a] | 1/batch[a] | 1/batch[a] | 16[b] | 1/batch[a] | 240 |
| Total/dissolved copper and zinc | 14 | 3 | 1 | 224 | 1/batch[a] | 1/batch[a] | 1/batch[a] | 16[b] | 1/batch[a] | 240 |

NA = not applicable.

[a] Laboratory quality assurance samples will be analyzed with each batch of samples submitted to the laboratory for analysis. A laboratory batch will consist of no more than 20 samples.

[b] One field duplicate sample will be collected and analyzed for each storm or baseline sampling event (total of 14 samples per event). Therefore, field duplicates will be collected at a frequency of 7 percent of the total number of submitted samples.

**Table 7. Quality Assurance Requirements and Anticipated Number of Sediment Quality Samples per Water Year.**

| Parameter | Number of Stations | Samples per Year per Station | Total Number of Samples Annually | Laboratory Method Blanks | Laboratory Control Standard | Matrix Spike | Field Duplicates | Lab Duplicates | Total Number of Samples Including Field Duplicates |
|---|---|---|---|---|---|---|---|---|---|
| Total organic carbon | 19 | 1 | 19 | 1/batch[a] | 1/batch[a] | NA | 2[b] | 1/batch[a] | 21 |
| Metals (copper and zinc) | 19 | 1 | 19 | 1/batch[a] | 1/batch[a] | 1/batch[a] | 2[b] | 1/batch[a] | 21 |
| Polycyclic aromatic hydrocarbons | 19 | 1 | 19 | 1/batch[a] | 1/batch[a] | 1/batch[a] | 2[b] | 1/batch[a] | 21 |
| Phthalates | 19 | 1 | 19 | 1/batch[a] | 1/batch[a] | 1/batch[a] | 2[b] | 1/batch[a] | 21 |

NA = not applicable.

[a] Laboratory quality assurance samples will be analyzed with each batch of samples submitted to the laboratory for analysis. A laboratory batch will consist of no more than 20 samples.

[b] Two field duplicate samples will be collected and analyzed for annual sampling event. Therefore, field duplicates will be collected at a frequency of 10 percent of the total number of submitted samples.

### 9.1.2. Field Notes

During each site visit to each monitoring station, the following information will be recorded on a waterproof standardized field form (Appendix D):

- Site name
- Date and time of visit and sample collection
- Name(s) of field personnel present
- Weather and flow conditions
- Sample duplicated? (if sampled)
- Unusual conditions (e.g., oily sheen, odor, color, turbidity, discharges or spills, and land disturbances)
- Modifications of sampling procedures

### 9.1.3. Field Duplicates

Field duplicates will be collected at a sufficient frequency to represent 7 percent of the total number of project samples analyzed. The number of field duplicates to be collected during the sampling season is listed in Tables 6 and 7. For water quality samples, two successive grabs will be collected for each analyte.

### 9.1.4. Sample Handling

All sample bottles will be transported in coolers with ice and kept below 6 degrees Celsius until delivery to the laboratory within 24 hours of sample collection (the shortest holding time of any of the measured parameters). The temperature of the samples will be measured upon sample delivery and recorded on the chain of custody form.

### 9.1.5. Sample Identification and Labeling

All sample containers will be labeled with the following information using indelible ink and labeling tape:

- Site/station name (e.g., EVALSS)
- Date of sample collection (year/month/day: yyyy/mm/dd)
- Time of sample collection (international format [24 hour])
- Field personnel initials (such as DSA)

Quality assurance samples (field duplicates and blanks) will only be labeled as QA1, QA2, etc., for delivery to lab; but field staff will maintain a cross-check list of which stations and sample types the quality assurance samples represent. When results are returned from the laboratory, the consultant will associate full label information with the results, and populate database fields for quality assurance sample and type.

Waterproof labels will be placed on dry sample-container lids by self-adhesion or with tape. Any written marks will be made with waterproof ink.

### 9.1.6. Sample Containers and Preservation

Clean, decontaminated sample bottles will be obtained from the analytical laboratory in advance of each storm event. Spare sample bottles will be carried by the sampling team in case of breakage or possible contamination. Sample containers and preservation techniques will follow US EPA (2007) guidelines.

### 9.1.7. Chain-of-Custody Record

A chain-of-custody record will be maintained for each sample batch listing the sampling date and time, sample identification numbers, analytical parameters and methods, persons relinquishing and receiving custody, dates and times of custody transfer, and temperature of sample upon delivery.

## 9.2. Laboratory Quality Control Procedures

Quality control procedures that will be implemented in the laboratory are described in the following subsections. The frequency and type of quality control samples to be analyzed by the laboratory are also summarized in Tables 6 and 7.

### 9.2.1. Method Blanks

Method blanks consisting of deionized and micro-filtered pure water will be analyzed with every laboratory sample batch. A laboratory sample batch will consist of no more than 20 samples and may include samples from other projects. The total number of method blanks anticipated for this study is shown in Tables 6 and 7 by parameter. Blank values will be presented in each laboratory report.

### 9.2.2. Control Standards

Control standards for each parameter will be analyzed by the laboratory with every sample batch. A laboratory sample batch will consist of no more than 20 samples and may include samples from other projects. The total number of control standards anticipated for this study is shown in Tables 6 and 7 by parameter. Raw values and percent recovery (see formula in the *Quality Objectives* section) for the control standards will be presented in each laboratory report.

### 9.2.3. Matrix Spikes

For applicable parameters, matrix spikes will be analyzed by the laboratory with every sample batch. A laboratory sample batch will consist of no more than 20 samples and may include samples from other projects. The total number of matrix spikes anticipated for this study is shown in Tables 6 and 7 by parameter. Raw values and percent recovery (see formula in the *Quality Objectives* section) for the matrix spikes will be presented in each laboratory report.

### 9.2.4. Laboratory Duplicates

Laboratory duplicate samples for each parameter will be analyzed for specifically labeled quality assurance samples submitted with every sample batch. This will represent no less than 20 percent of the project submitted samples. The total number of laboratory duplicates anticipated for this study is shown in Tables 6 and 7 by parameter. Raw values and relative percent difference (see formula in the *Quality Objectives* section) of the duplicate results will be presented in each laboratory report.

# 10. Data Management and Documentation Procedures

This section discusses data management, which addresses the path of data from recording in the field or laboratory to final use and archiving. The data management and documentation strategy provides for consistency when collecting, assessing, and documenting environmental data and electronic storage of all documents and records on servers that are regularly backed up.

## 10.1. Data Management

Data from each data logger used for continuous hydrologic (flow and precipitation) and water quality monitoring will be uploaded every 4 to 8 weeks and imported directly into a database for subsequent analysis and archiving purposes. These data will be immediately checked for evidence of an equipment malfunction or other operational problems. Gaps in flow data may need to be interpolated; if this occurs, data will be stored and presented in a manner that makes it clear what data are from measurements, and what data have been interpolated.

Continuous hydrologic and water quality data collected by the King County DNRP Hydrologic Monitoring Program are stored in an electronic relational database (Hydrologic Information Center, aka HIC) consisting of indexed tables on a SQL server maintained by the King County Department of Information Technology. A desktop computer user interface allows data files to be imported to the database, adjustments to the data made, field notes input, and data management and export functions performed. A web interface allows public access to all data in the HIC (http://green2.kingcounty.gov/hydrology/).

Continuous hydrologic and water quality data acquired by telemetry will be automatically input to the HIC. These data are provisional. The individual electronic files downloaded (by telemetry or directly) from the project data loggers will be stored in designated directories on a King County networked server. Data from the paper field forms are input to the HIC. The paper forms are stored in a project file.

Telemetered data is automatically input to the HIC with computer routines that use stored settings to make offset corrections and apply rating tables. Alerts are sent when data exceeds set value limits. Staff check daily that telemetered stations are reporting and giving reasonable values. Telemetered data are flagged “provisional.”

After each site visit, the results of the field measurements are input to HIC tables. The discharge measurement is plotted and compared to the current rating curve. If an update to the rating is indicated, data since the last supervised data input is prepared and run from the desktop application. The telemetry import settings are adjusted. The procedure for importing and processing directly downloaded (non-telemetered) data is similar to the process for revising data from telemetered sites. The downloaded data is examined and proofed before being imported to the HIC. The comma delimited text file is imported to a spreadsheet,

where the time is checked and the data charted. The first or last records may be adjusted if it is apparent that the logger had not equilibrated to the stream conditions when the reading was made (removable data logging sensors). The chart of the data over time is printed and any anomalies noted on that for the project file. Data that are believed to be in error may be removed from the data set to be imported. The reasons for this must be noted on the printout. This is more typical for continuous water quality data. Typical reasons for exclusion of data are observing the logger out of water at the time of download, noticing that the range of fluctuation in a day is unreasonable and matches air temperature fluctuations, odd spikes in reading that are physically unlikely to have occurred. Exclusions must be approved by the Lead Hydrologic Engineer. Once the data have been proofed, a clean sheet of time stamps and values is created and the spreadsheet saved. An import text file of the clean data is created.

The HIC data import form allows offset and drift corrections to be applied to the data. Both the raw and corrected values are stored in the HIC. The data are automatically flagged Provisional and remain so until verified. Once imported, the data are available for viewing and download from the public HIC website.

Continuous hydrologic data stored in the HIC will be post processed by Herrera using a custom software program written in Visual Basic to delineate storm events and compute summary statistics from the data including peak flow rate and volume. Storm events are delineated based on the following inputs to the program:

- Minimum dry period between storms in hours
- Maximum precipitation depth between storms in inches
- Maximum flow rate between storms in cubic feet per second
- Maximum flow duration during storms in hours

Output from this program will be used in subsequent statistical analyses to compare measured flows in Tosh Creek and Monticello Creek to modeled flows for forested and existing conditions that were derived from hydrologic models that have been developed for these watersheds using HSPF (see *Experimental Design and Data Quality Assessment* sections).

The laboratory will report the analytical results within an anticipated 30- to 40-day timeframe from receipt of the samples. The laboratory will provide sample and quality control data in standardized reports that are suitable for evaluating the project data. These reports will include all data including raw quality assurance results, and all quality control results associated with the data. The reports will also include a case narrative summarizing any problems encountered in the analyses, corrective actions taken, changes to the referenced method, and an explanation of data qualifiers. Laboratory analytical and quality assurance sample results will be delivered from the laboratory in both electronic and hard copy form.

Analytical data for the project will be stored in a Structure Query Language (SQL) database. The Herrera Quality Assurance Officer (see *Organization and Key Personnel* section) will perform an independent review of the data to ensure that all sample values were entered without error. Specifically, 10 percent of the sample values will be randomly selected for

rechecking and cross checking with laboratory reports. If errors are detected, they will be corrected, and then an additional 10 percent will be selected for validation. This process will be repeated until no errors are found. Results from these reviews will be documented on standardized forms (see Appendix D).

Data entry for physical habitat and biological monitoring will be performed using electronic field data collection software that has been developed by Ecology to ensure completeness in field data collection, and with loading these data to Ecology's Watershed Health database in the Environmental Information Management (EIM) system. Ecology will also calculate metrics for assessing physical habitat conditions using scripts that have been developed to work with the EIM system.

Data from biological monitoring will be loaded into King County's Puget Sound Stream Benthos database (www.pugetsoundstreambenthos.org/), as well as Ecology's Watershed Health database in EIM system.

Both the laboratory and Herrera will retain project related data for 5 years after completion of the project (i.e., 2030).

## 10.2. Documentation and Records

Four types of documentation will be managed: 1) field operation records, 2) laboratory records, 3) data handling records, and 4) QAPP revision documentation.

### *10.2.1. Field Operation Records*

Field operation records may include data sheets and field notes, and photographs taken of the described activities (when taken).

### *10.2.2. Laboratory Records*

Laboratory records will include a data package (lab report in Excel® format). Hard copy laboratory reports will not be issued by the project laboratory.

### *10.2.3. Data Handling Records*

All documents associated with a sampling event will be stored electronically. Paper copies will not be archived. Each sampling event will be documented with the following records:

- Chain-of-Custody (COC)
- Field Reports (field notes)
- Data Package

All documents will be provided in portable document format (PDF) with the exception of the lab reports, which will be in Excel® format. All project documentation will be stored on a SQL server organized by sampled event.

### 10.2.4. Revisions to the QAPP

In the event that significant changes to this QAPP are required prior to the completion of the study, a revised version of the document (with changes tracked) shall be prepared and submitted to the City and Ecology for review. The approved version of the QAPP shall remain in effect until the revised version has been approved. Justifications, summaries, and details of expedited changes to the QAPP will be documented and distributed to all persons on the QAPP distribution list by the Project Manager.

# 11. AUDITS AND REPORTS

The following sections describe routine audits and reporting activities that will take place in connection with this performance verification.

## 11.1. Audits

Audits will be performed to detect potential deficiencies in the data collected for this project. Audits of the data from hydrologic monitoring will on occur following their transfer from data loggers at each station (see *Data Management and Documentation Procedures* section). In connection with these audits, data collected from each monitoring station will be compared to data from the previous week and data from the rain gauge station to identify potential data quality issues. This audit will specifically include an examination of the data record for gaps, anomalies, or inconsistencies between the discharge and water level data relative to data collected over the preceding week. Any data generated from calibration checks that were performed at a particular monitoring station will also be reviewed to detect potential instrument drift or other operational problems.

In the event that quality assurance issues are identified on the basis of these audits, measures will be taken to troubleshoot the problem(s) and to implement corrective actions if needed. Further, if bias in the hydrologic record is detected and can be corrected by calibration, corrective actions will be documented in the database. All quality assurance issues identified in the hydrologic data and the associated corrective actions will be documented.

Audits performed for water and sediment quality data will occur within 14 business days of receiving results from the laboratory. This review will be performed to ensure that all data are consistent, correct, and complete, and that all required quality control information has been provided. Specific quality control elements for the data (see Tables 1 and 2) and raw data will also be examined to determine if the MQOs for the project have been met. Results from these audits will be documented in quality assurance worksheets (see Appendix D) that will be prepared for each batch of samples.

In the event that a potential quality assurance issue is identified through these audits, Herrera's Data Quality Assurance Officer (see *Organization and Key Personnel* section) will review the data to determine if any response actions are required. Response actions in this case might include the collection of additional samples, reanalysis of existing samples if not yet past holding time, or advising the laboratory that methodologies or QA/QC procedures need to be improved.

## 11.2. Reporting

Data summary reports will be prepared on an annual basis over the anticipated 10-year timeframe for implementing the RPWS. These reports will provide tabular and/or graphical summaries of all data that were collected over the preceding year in connection with the following monitoring components of the RPWS: hydrologic, water quality, sediment quality,

physical habitat, and biological. These reports will provide a detailed description of any quality assurance issues associated with these data based on results from the audits (see *Audits and Reports* section) and data usability assessments (see *Data Quality Assessment* section). Any corrective actions that were undertaken to address quality assurance issues will also be described. Finally, these reports will document all rehabilitation efforts that have occurred in the Application watersheds over the previous year. Included will be detailed information on the design and operational status of structural stormwater controls and the frequency and geographic extent of nonstructural stormwater control implementation.

In years 4, 6, 8, and 10 of the RPWS' implementation, trend analyses reports will also be prepared as companion documents to the data summary reports described above. These reports will summarize the results of statistical analyses that are described in the *Experimental Design* and *Data Quality Assessment* sections of this QAPP. These reports will specifically document statistically significant trends identified through these analyses in the Application, Reference, and Control. A detailed discussion of these trends will be provided with a specific emphasis on their relationship to rehabilitation efforts in the Application watersheds. Finally, a summary of major conclusions from these analyses will also be provided.

Finally, stand-alone reports will be prepared to summarize performance of specific structural stormwater controls that are evaluated through the Effectiveness Monitoring component of the RPWS. These reports will be prepared in accordance with guidelines from Ecology's TAPE program (Ecology 2011). Results from these reports will also be referenced as applicable in the discussion provided for the trend analysis reports described above.

# 12. Data Verification and Validation

Data verification and validation will be performed on both the hydrologic and water quality data that are collected through the duration of this project. The specific procedures that will be used to verify and validate each type of data are described in the following sections.

## 12.1. Verification and Validation Methods for Data from Hydrologic Monitoring

The verification and validation process for hydrologic data will involve the following steps:

1. Precipitation data from the study will be reviewed to identify any significant gaps. If possible, these gaps will be filled using data obtained from a nearby rain gauge.
2. The available discharge and water level data from the monitoring stations will be verified based on comparisons of the associated hydrographs to the hyetographs for individual storm events. Gross anomalies (such as data spikes), gaps, or inconsistencies that are identified through this review will be investigated to determine if there are quality assurance issues associated with the data that limit their usability.
3. If minor quality assurance issues are identified in any portion of the discharge record or in the water level data from a particular station and storm event, the data from that station and event will be considered an estimate and assigned a (E) qualifier. If major quality assurance issues are identified in any portion of the data from a particular station and/or storm event, the data from that station and event will be rejected and assigned an (*W*) qualifier. Estimated values will be used for evaluation purposes while rejected values will not.

## 12.2. Verification and Validation Methods for Hydrologic Model Calibration

As described in the *Experimental Design* section, analyses will be performed to compare measured flows in Monticello Creek and Tosh Creek to modeled flows for forested and existing conditions that were derived from hydrologic models that have been developed for these watersheds using HSPF. To evaluate the calibration accuracy of these models, indicators for evaluating hydrologic impacts that are identified in Table 4 will be computed using the modeled flows for existing conditions. These indicators will then be compared to indicators that are computed from continuous flow data that will be collected in years 1 and 2 of the RPWS' implementation from stations MONM and TOSMO in Monticello Creek and Tosh Creek (see Figures 3 and 4, respectively). If indicators computed based on the modeled and measured flow data deviate by more than 50 percent, both the calibration of the HSPF model and the accuracy of the measured flow data will be assessed collectively.

## 12.3. Verification and Validation Methods for Data from Water and Sediment Quality Monitoring

Data will be reviewed and audited within 14 business days of receiving the results from the laboratory (see *Audits and Reports* section). This review will be performed to ensure that all data are consistent, correct and complete, and that all required quality control information has been provided. Specific quality control elements for the data (see Tables 1 and 2) will also be examined to determine if the MQOs for the project have been met. Values associated with minor quality control problems will be considered estimates and assigned *J* qualifiers. Values associated with major quality control problems will be rejected and qualified *R*. Estimated values may be used for evaluation purposes, while rejected values will not be used. The following sections describe in detail the data validation procedures for these quality control elements:

- Completeness
- Methodology
- Holding times
- Method blanks
- Reporting limits
- Duplicates
- Matrix spikes
- Control standards
- Sample representativeness

### *12.3.1. Completeness*

Completeness will be assessed by comparing valid sample data with this QAPP and the chain-of-custody records. Completeness will be calculated by dividing the number of valid values by the total number of values. If fewer than 95 percent of the samples submitted to the laboratory are judged to be valid, then more samples will be collected until at least 95 percent are judged to be valid.

### *12.3.2. Methodology*

Methodologies for analytical procedures will follow US EPA approved methods (APHA et al. 1992, 1998; US EPA 1983, 1984, 1986; ASTM 2007) specified in Tables 1 and 3. Field procedures will follow the methodologies described in this QAPP. Any deviations from these methodologies must be approved by the City and Ecology and documented in an addendum to this QAPP. The database will include a field for identifying analytical method. Deviations that are deemed unacceptable will result in rejected values (*R*) and will be corrected for future analyses.

### 12.3.3. Holding Times

Holding times for each analytical parameter in this study are summarized in Table 5. Holding time compliance will be assessed by comparing sample collection dates and times analytical dates and times.

Data from samples that exceed the specified maximum holding times by less than 2 times the holding time will be considered estimates (*J*). Data from samples that exceed the maximum holding times by more than 2 times holding time will be rejected values (*R*).

### 12.3.4. Method Blanks

Method blank values will be compared to the MQOs that have been identified for this project (see Tables 1 and 2). If an analyte is detected in a method blank at or below the reporting limit, no action will be taken. If blank concentrations are greater than the reporting limit, the associated method blank data will be labeled with a *U* (in essence increasing the reporting limit for the affected samples), and associated project samples within five times the de facto reporting limit will be flagged with a *J*.

### 12.3.5. Reporting Limits

Both raw values and reporting limits will be presented in each laboratory report. If the proposed reporting limits are not met by the laboratory, the laboratory will be requested to reanalyze the samples or revise the method, if time permits. Proposed reporting limits for this project are summarized in Table 5.

### 12.3.6. Duplicates

Duplicate results exceeding the MQOs for this project (see Tables 1 and 2) will be noted, and associated values may be flagged as estimates (*J*). If the objectives are severely exceeded (such as more than twice the objective), then associated values may be rejected (*R*).

### 12.3.7. Matrix Spikes

Matrix spike results exceeding the MQOs for this project (see Tables 1 and 2) will be noted, and associated values may be flagged as estimates (*J*). However, if the percent recovery exceeds the MQOs and a value is less than the reporting limit, the result will not be flagged as an estimate. Nondetected values will be rejected (*R*) if the percent recovery is less than 10 percent.

### 12.3.8. Control Standards

Control standard results exceeding the MQOs for this project (see Tables 1 and 2) will be noted, and associated values will be flagged as estimates (*J*). If the objectives are severely exceeded (such as more than twice the objective), then associated values will be rejected (*R*).

### 12.3.9. Sample Representativeness

The data collected for this study will be labeled with unique quality assurance flags for both laboratory and field data quality issues. Table 8 presents the flagging scheme that will be used in the reports produced for this project.

## 12.4. Verification and Validation Methods for Data from Physical Habitat and Biological Monitoring

Data verification and validation methods for data from physical habitat and biological monitoring will be adopted from the *Quality Assurance Project Plan for Status and Trends Monitoring of Small Streams in the Puget Lowlands Ecoregion* (Ecology 2014c). Specifically, field staff will verify field results after measuring and before leaving each monitoring station. They will keep field notes to meet the requirements for documentation of field measurements. The field lead will ensure that field data entries are complete and error-free. The field lead also will check for consistency within an expected range of values, verify measurements, ensure measurements are made within the acceptable instrumentation error limits, and record anomalous observations.

The project manager at the taxonomic laboratory will verify all taxonomic results, and the laboratory will verify all analytical results prior to reporting.

**Table 8. Data Qualifier Definitions and Usage Criteria.**

| Data Qualifier | Definition | Criteria for Use |
|---|---|---|
| J | Value is an estimate based on analytical results. | MQOs for field duplicates, laboratory duplicates, matrix spikes, laboratory control samples, holding times, or blanks have not been met. |
| R | Value is rejected based on analytical results. | Major quality control problems with the analytical results. |
| U | Value is below the reporting limit. | Based on laboratory method reporting limit. |
| UJ | Value is below the reporting limit and is an estimate based on analytical results. | Based on laboratory method reporting limit; MQOs for analytical results have not been met. |

# 13. Data Quality Assessment

Separate subsections herein describe the procedures that will be used to assess the usability of the data, and analyze the data.

## 13.1. Data Usability Assessment

The Herrera Data Quality Assurance Officer (see *Project Organization and Schedule* section) will provide an independent review of the laboratory QC data from each sampling event using the MQOs that have been identified in this QAPP. The results will be presented in water and sediment quality data quality memorandums that will be prepared with the annual data summary reports (see *Audits and Reports* section). The data quality memorandums will summarize quality control results, identify when data quality objectives were not met, and discuss the resulting limitations (if any) on the use or interpretation of the data. Specific quality assurance information that will be noted in the data quality assessment report includes the following:

- Changes in and deviations from the QAPP
- Results of performance or system audits
- Significant quality assurance problems and recommended solutions
- Data quality assessment results in terms of precision, bias, representativeness, completeness, comparability, and reporting limits
- Discussion of whether the quality assurance objectives were met, and the resulting impact on decision-making
- Limitations on use of the measurement data

To assess the quality of the flow data, the King County Data Quality Assurance Officer will review results from the verification and validation process that was applied to the hydrologic data (see *Data Verification and Validation* section). Based on this review, specific data points or periods in the continuous time series data that are considered estimated or rejected values will be summarized in a tabular format. These results will then be presented in hydrologic data quality assessment report that will include a discussion of the resulting limitations, if any, on the use or interpretation of the data. The hydrologic data quality assessment report will also be prepared with the annual data summary reports.

## 13.2. Data Analysis Procedures

As described previously, the RPWS is being implemented to evaluate the effectiveness of watershed rehabilitation efforts for improving receiving water conditions at the watershed scale. To answer this question, the Status and Trends Monitoring component of the RPWS will utilize a “paired watershed” experimental design that will involve the collection of various

hydrologic, chemical, physical habitat, and biological indicators of stream health over an extended time frame in watersheds classified as Application, Reference, and Control. Statistical analyses will be performed to detect trends in these watersheds with the pattern of interest being evidence that receiving water conditions are improving based on one or more of these indicators in the Application watersheds while conditions in the Reference and Control watersheds remain relatively static. The specific statistical analyses procedures that will be used to detect these trends are summarized in Table 9 by indicator type.

**Table 9. Data Analysis Procedures for the Redmond Paired Watershed Study.**

| Indicator | Data Analysis Procedures |
|---|---|
| **Hydrology Monitoring** | |
| • Continuous Flow | • Measured flows in Tosh Creek and Monticello Creek will be compared to modeled flows for forested and existing conditions (i.e., conditions when the models were developed) that were derived from existing hydrologic models that have been developed for these watersheds using Hydrological Simulation Program—Fortran (HSPF). For these analyses, the measured and modeled flows will be post-processed to delineate individual periods of base and storm flow, respectively, across the entire time series for a given water year. Separate statistical analyses (Wilcoxon signed rank tests) will then be performed to determine if measured peak flows and flow volumes, respectively, during storm flow are significantly different from modeled flows for either the forested and existing conditions. Statistical significance in these tests will be evaluated based on an $\alpha$-level of 0.05. |
| • High pulse count<br>• High pulse frequency<br>• High pulse count duration<br>• High pulse count range<br>• Low pulse count<br>• Low pulse count frequency<br>• Low pulse count duration<br>• Low pulse count range<br>• Richards-Baker (RB) flashiness index<br>• TQ Mean<br>• Storm volume<br>• Base volume<br>• Total flow volume | • Trends over time at each monitoring station will be evaluated using parametric (Pearson's r) and nonparametric (Kendall's tau or Spearman's rho) tests of correlation between these indicators and time. Statistical significance of the correlation coefficients will be evaluated based on an $\alpha$-level of 0.05. |

| Table 9 (continued). Data Analysis Procedures for the Redmond Paired Watershed Study. | |
|---|---|
| **Indicator** | **Data Analysis Procedures** |
| **Water Quality Monitoring** | |
| • Total suspended solids<br>• Turbidity<br>• Conductivity<br>• Hardness<br>• Dissolved organic carbon<br>• Fecal coliform bacteria<br>• Total phosphorus<br>• Total nitrogen<br>• Copper, total and dissolved<br>• Zinc, total and dissolved | • Trends over time at each monitoring station will be evaluated using parametric (Pearson's r) and nonparametric (Kendall's tau or Spearman's rho) tests of correlation between these indicators and time. Where possible, variation in the indicator data related to changes in stream flow will be removed prior to performing the correlation analyses using methods described in Helsel and Hirsch (2002). In all cases, statistical significance of the correlation coefficients will be evaluated based on an $\alpha$-level of 0.05.<br>• Annual mass load estimates will also be derived for the following subset of indicators using the nonparametric "smearing" approach described in Helsel and Hirsch (2002): total suspended solids, total phosphorus, total nitrogen, total copper, and total zinc. Trends over time at each monitoring station will be evaluated using parametric (Pearson's r) and nonparametric (Kendall's tau or Spearman's rho) tests of correlation between these mass load estimates and time. Statistical significance of the correlation coefficients will be evaluated based on an $\alpha$-level of 0.05. |
| • Temperature<br>• Conductivity | • Continuous data for temperature and conductivity will be post processed to compute monthly average and peak values form the time series. Trends over time at each monitoring station will be evaluated using a seasonal Kendall test (Helsel and Hirsch 2002) of correlation between these values and time. Statistical significance of the correlation coefficients will be evaluated based on an $\alpha$-level of 0.05. |
| **Sediment Quality Monitoring** | |
| • Total organic carbon<br>• Copper<br>• Zinc<br>• Polycyclic aromatic hydrocarbons<br>• Phthalates | • Trends over time at each monitoring station will be evaluated using parametric (Pearson's r) and nonparametric (Kendall's tau or Spearman's rho) tests of correlation between these indicators and time. Statistical significance of the correlation coefficients will be evaluated based on an $\alpha$-level of 0.05. |
| **Physical Habitat Monitoring** | |
| • Bank-full width<br>• Wetted width<br>• Cumulative bar width<br>• Bank-full depth<br>• Wetted depth<br>• Substrate class<br>• Substrate embeddedness<br>• Fish cover | • No statistical analyses will be performed on the data from physical habitat monitoring. Instead, the data from all indicators will be evaluated collectively from each year of monitoring to the next to obtain an overall assessment of physical habitat conditions. Improving or degrading conditions at specific stations will then be identified based on best professional judgement. |

| Table 9 (continued). Data Analysis Procedures for the Redmond Paired Watershed Study. | |
|---|---|
| **Indicator** | **Data Analysis Procedures** |
| **Physical Habitat Monitoring (continued)** | |
| • Thalweg depth<br>• Presence of bars<br>• Presence of edge pools<br>• Main channel slope and bearing<br>• Large woody debris tally, including notation of diameter, length, category, zone, and key-pieces<br>• Evidence of vegetation colonization below OHWM that persists more than 1 year<br>• Slopes vegetated over the crown of the bank<br>• Presence of desirable native plant species<br>• Presence of invasive plant species<br>• Presence of good-habitat indicator liverwort species<br>• Channel incision or aggradation<br>• Channel widening, narrowing, or migration<br>• Changes in channel slope, sinuousity, and/or bed-form type | • No statistical analyses will be performed on the data from physical habitat monitoring. Instead, the data from all indicators will be evaluated collectively from each year of monitoring to the next to obtain an overall assessment of physical habitat conditions. Improving or degrading conditions at specific stations will then be identified based on best professional judgement. |
| **Biological Monitoring** | |
| • Benthic Index of Biotic Integrity<br>• Taxa Richness<br>• Ephemeroptera Richness<br>• Plecoptera Richness<br>• Trichoptera Richness<br>• Clinger Percent<br>• Long-Lived Richness<br>• Intolerant Richness<br>• Percent Dominant<br>• Predator Percent<br>• Tolerant Percent | • Trends over time at each monitoring station will be evaluated using parametric (Pearson's r) and nonparametric (Kendall's tau or Spearman's rho) tests of correlation between these indicators and time. Statistical significance of the correlation coefficients will be evaluated based on an $\alpha$-level of 0.1. |

As described in the *Audits and Reporting* section, these analyses identified in Table 9 will be performed for trend analyses reports that will be prepared in years 4, 6, 8, and 10 of the RPWS implementation. The 4-year delay in conducting the analyses will allow sufficient time for the broad implementation of rehabilitation efforts in the Application watersheds that could contribute to detectable improvements in receiving water conditions.

Finally, existing data analysis procedures from Ecology's TAPE guidelines (Ecology 2011) will used to evaluate the performance of specific structural stormwater controls that are monitored through the Effectiveness Monitoring component of the RPWS.

# 14. REFERENCES


APHA, AWWA, and WEF. 1992. Standard Methods for the Examination of Water and Wastewater. 18th edition. Edited by A.E. Greenberg, American Public Health Association; A.D. Eaton, American Water Works Association; and L. S. Clesceri, Water Environment Federation.

APHA, AWWA, and WEF. 1998. Standard Methods for the Examination of Water and Wastewater. 20th edition. Edited by A. Greenberg, A.D. Eaton, and L. Clesceri. American Public Health Association, American Water Works Association, Water Environment Federation, Washington, D.C.

ASTM. 2007. Book of Standards. Volume 11.05 – Water and Environmental Technology: Water (II). American Society for Testing and Materials, International, West Conshohocken, Pennsylvania.

City of Redmond. 2011. City of Redmond 2011 Water System Plan. September 2011.

City of Redmond, RH2 Engineering, Northwest Hydraulics Consultant, Inc., and Triangle Associates, Inc. 2015. Tosh Creek Watershed Restoration Plan. Accessed July 2, 2015. <http://www.redmond.gov/common/pages/UserFile.aspx?fileId=159601>.

Berge, H. and D. Lantz. 2014. 2013 Reconnaissance Report for Evans Creek Tributary 108. Prepared by Science Section, Water and Land Resources Division, King County Department of Natural Resources, Seattle, Washington.

DeGasperi, C.L., H.B. Berge, K.R. Whiting, J.J. Burkey, J.L. Cassin, and R.R. Fuerstenberg. 2009. Linking Hydrologic Alteration to Biological Impairment in Urbanizing Streams of the Puget Lowland, Washington, USA. Journal of the American Water Resources Association 45(2):512–533.

Ecology. 2004. Guidelines for Preparing Quality Assurance Project Plans for Environmental Studies. Publication Number 04-03-030. Washington State Department of Ecology (Ecology). July 2004.

Ecology. 2005. Manchester Environmental Laboratory Lab Users' Manual, Eighth Edition. Washington State Department of Ecology, Olympia, Washington.

Ecology. 2011. Technical Guidance Manual for Evaluating Emerging Stormwater Treatment Technologies: Technology Assessment Protocol – Ecology (TAPE). Washington State Department of Ecology. Accessed July 13, 2015. <https://fortress.wa.gov/ecy/publications/summarypages/1110061.html>.

Ecology. 2012. Washington State's Water Quality Assessment. Washington State Department of Ecology. Accessed May 4, 2015. <http://www.ecy.wa.gov/programs/wq/links/wq_assessments.html>.

Ecology. 2014a. 2012 Stormwater Management Manual for Western Washington (as Amended in 2014). Publication Number 14-10-055. Washington State Department of Ecology. December 2014.

Ecology. 2014b. Establishing Benthic Index of Biotic Integrity (B-IBI) Thresholds for Use in the Water Quality Assessment. Accessed December 23, 2015. <https://fortress.wa.gov/ecy/publications/publications/1410054.pdf>

Ecology. 2014c. Quality Assurance Project Plan for Status and Trends Monitoring of Small Streams in Puget Lowlands Ecoregion for Monitoring Conducted using Pooled RSMP Funds contributed by Western Washington Municipal Stormwater Permittees. Publication No. 14-10-054.

Ecology. 2014d. Standard Operating Procedure for Measuring and Calculating Stream Discharge – EAP056. Accessed December 30, 2015. <http://www.ecy.wa.gov/programs/eap/qa/docs/ECY_EAP_SOP_Measuring_and_CalculatingStreamDischarge_v1_2EAP056.pdf>.

Helsel, D.R. and R.M. Hirsch, 2002. Statistical Methods in Water Resources Techniques of Water Resources Investigations, Book 4, chapter A3. US Geological Survey. 522 pages.

Herrera. 2013. City of Redmond, Washington Citywide Watershed Management Plan. Prepared for the City of Redmond by Herrera Environmental Consultants, Inc., Seattle, Washington. November 25, 2013.

Herrera. 2015a. Redmond Paired Watershed Study Experimental Design Report. Prepared for the City of Redmond by Herrera Environmental Consultants, Inc., Seattle, Washington. July 14, 2015.

Herrera. 2015b. Redmond Paired Watershed Study: Monitoring Literature Review Summary Report. Prepared for the City of Redmond by Herrera Environmental Consultants, Inc., Seattle, Washington. April 23, 2015.

Herrera. 2015c. Quality Assurance Project Plan: Redmond Paired Watershed Study. Prepared for the City of Redmond by Herrera Environmental Consultants, Inc., Seattle, Washington. December 2015.

PSSB. 2011. Benthic Index of Biotic Integrity (B-IBI) scores for Washington Streams. Puget Sound Stream Benthos (PSSB). Accessed December 21, 2011. <http://pugetsoundstreambenthos.org/default.aspx>.

Shuett-Hames, D., A.E. Pleus, J. Ward, M. Fox, and J. Light. 1999. TFW Monitoring Program method manual for the large woody debris survey. Prepared for the Washington State Dept. of Natural Resources under the Timber, Fish, and Wildlife Agreement. TFW-AM9-99-004. DNR #106.

US EPA. 1983. Methods for Chemical Analysis of Water and Wastes. EPA-600/4-79-020. US Environmental Protection Agency, Environmental Monitoring and Support Laboratory, Cincinnati, Ohio.

US EPA. 1984. Guidelines Establishing Test Procedures for the Analysis of Pollutants under the Clean Water Act; Final Rule and Interim Final Rule. CFR Part 136. US Environmental Protection Agency. October 26, 1984.

US EPA. 1986. Test Methods for Evaluating Solid Waste, Physical/Chemical Methods SW-846 Third Edition, Updates I, II, IIA, IIB, III, and IV. Office of Solid Waste and Emergency Response, US Environmental Protection Agency, Washington, D.C. December 1986.

US EPA. 2007. 40 CFR Part 122, 136, 141, 143, 430, 455, and 456; Guidelines Establishing Test Procedures for the Analysis of Pollutants under the Clean Water Act; National Primary Drinking Water Regulations; and National Secondary Drinking Water Regulations; Analysis and Sampling Procedures; Final Rule. Federal Register. US Environmental Protection Agency, Washington, D.C.

Washington Trout. 2005. Redmond, WA Fish and Fish Habitat Distribution Study 2004–2005. Accessed December 21, 2011. <http://www.washingtontrout.org/redmond/index.shtml>.

WDFW. 2011. Salmonid Stock Inventory (SaSI). Washington Department of Fish and Wildlife. Olympia, Washington. Accessed December 21, 2011. <http://wdfw.wa.gov/fish/sasi/>.

# APPENDIX A

# Power Test Results

# TECHNICAL MEMORANDUM

**Date:** December 31, 2015

**To:** Andy Rheaume, City of Redmond

**From:** John Lenth and Kristen Matsumura, Herrera Environmental Consultants, Inc.

**Subject:** Statistical Power of Trend Tests for the Redmond Paired Watershed Study

---

## Introduction

The Redmond Paired Watershed Study (RPWS) is one of several effectiveness monitoring studies that was selected for implementation starting in 2014 for the Regional Stormwater Monitoring Program for Puget Sound. The specific study question to be addressed through the RPWS is as follows:

> *How effective are watershed rehabilitation efforts at improving receiving water conditions at the watershed scale?*

To answer this study question, the RPWS will involve the collection of routine and continuous measurements of various hydrologic, chemical, physical habitat, and biological indicators of stream health over an extended time frame to quantify improvements in receiving water conditions in watersheds that have been targeted for rehabilitation efforts. At the same time these measurements will also be collected in watersheds that are not similarly targeted for these efforts. The trend of interest will be evidence that receiving water conditions are improving in the former watersheds while conditions in the latter watersheds remain relatively static.

In order to further develop the experimental design for the RPWS, the statistical power of trend tests to be performed for this study was investigated. The statistical power of a test is the probability that it will correctly reject the null hypothesis (H0) when the alternative hypothesis (H1) is true. Power analyses can be used to calculate the minimum sample size required for detecting an effect of a given size with a reasonably high probability. In this case, these analyses were specifically performed to investigate the power of Mann-Kendall trend tests for detecting significant trends in time series data given: 1) sample size, 2) the desired significance level, 3) magnitude of the trend, and 4) amount of variation within existing datasets. These power analyses were performed to determine adequate sample collection frequencies for detecting trends in benthic index of biotic integrity (B-IBI) scores, total suspended solids (TSS) and total zinc over the expected 10-year period of implementation for the RPWS.

This memorandum describes the methods that were used to perform these analyses. Results from these analyses are then then summarized and briefly discussed.

# Methods

Power analyses for B-IBI scores, TSS and total zinc were performed in a Microsoft Excel spreadsheet using a custom program written in Visual Basic. This program performs Monte Carlo simulations to evaluate the probability of detecting hypothetical trends in the data for each of these parameters using Kendall Tau trend tests given different sized sample sets. The total size of the sample set can be scaled up or down to evaluate the statistical power that can be obtained using different hypothetical annual sampling frequencies. During each simulation, the following two steps are performed:

1. A sample set is randomly drawn from a synthetic time series dataset with a fixed probability distribution that has been defined using actual monitoring data for each parameter (see more detailed discussion below). A predefined trend of a given magnitude has also been introduced to the synthetic time series dataset so that mean values gradually increase (for B-IBI scores) or decrease (for TSS and total zinc) over time. Figure 1 shows and example plot of a sample set that was randomly drawn from a synthetic time series dataset.
2. A Mann-Kendall trend test is performed on the sample set to determine if the predefined trend was detected using the randomly drawn samples. Specifically, a one-tailed Mann-Kendall trend test is performed using a significance level of 0.1 for B-IBI scores and 0.05 for TSS and total zinc.

These simulations are subsequently repeated 500 times; upon completion, the power of the Kendall Tau trend test is quantified based on the proportion of samples sets that successfully detected the predefined trend relative to the total number of simulations performed. For example, if 300 samples sets successfully detected the trend, the power of the test was assumed to be 60 percent (0.60 = 300/500). In other words, a sample set of the size used in the power analysis would have a 60 percent probability of detecting a trend if it were equal in magnitude to the one introduced to the synthetic time series dataset.

These simulations were repeated to evaluate the power of Kendall Tau trend tests given different scenarios with the following inputs:

- Different annual sampling frequencies (high, medium, and low) over a 10-year period.
- Trends of different magnitudes (high, medium, low) that were incorporated into the synthetic data sets
- Characteristics of the trend (linear or nonlinear)
- Assumed variation (high, medium, and low) within the existing datasets for each parameter.

Each of these inputs is defined in more detail in the following subsections. Table 2 also identifies all the various scenarios that were evaluated based on different permutations of these inputs.

## Annual Sampling Frequencies

The specific goal of this analysis was to identify annual sampling frequencies for B-IBI scores, TSS, and total zinc that would allow trends of an anticipated magnitude to be detected with a reasonably high probability over the expected 10-year period of implementation for the RPWS. As sample size increases, the statistical power of the Mann Kendall trend test will also increase. For this analyses, Monte Carlo simulations were performed to evaluate the power of Kendall Tau trend tests using the following annual sampling frequencies for each parameter:

B-IBI scores: 1, 2, and 3 samples collected annually; yielding a total of 10, 20, and 30 samples over a 10-year period, respectively, for trend tests.

TSS: 12, 16, and 20 samples collected annually; yielding a total of 120, 160, and 200 samples over a 10-year period, respectively, for trend tests.

Total Zinc: 12, 16, and 20 samples collected annually; yielding a total of 120, 160, and 200 samples over a 10-year period, respectively, for trend tests.

# Trend Magnitude

As the magnitude of the trend increases, the statistical power of the Mann Kendall trend test will also increase. For this analysis, professional judgement was used to identify a range of predefined trends (high, medium, and low) for B-IBI scores, TSS, and total zinc that could potentially be realized through watershed rehabilitation efforts. The specific predefined trends evaluated in the Monte Carlo simulations are as follows:

B-IBI Scores:

High – 28 unit increase in B-IBI scores over a 10-year period representing a change in biological condition from very poor to good

Medium – 19 unit increase in B-IBI scores over a 10-year period representing a change in biological condition from poor to good

Low- 9 unit increase in B-IBI scores over a 10-year period representing a change in biological condition from fair to good

TSS:

High – 4 mg/L decrease in TSS concentrations over a 10-year period

Medium – 2 mg/L decrease in TSS concentrations over a 10-year period

Low – 1 mg/L decrease in TSS concentrations over a 10-year period

Total Zinc:

High – 4 μg/L decrease in total zinc concentrations over a 10-year period

Medium – 2 μg/L decrease in total zinc concentrations over a 10-year period

Low – 1 μg/L decrease in total zinc concentrations over a 10-year period

## Trend Characteristics

To evaluate the sensitivity a the power analyses, separate Monte Carlo simulations were performed for B-IBI scores assuming the associated predefined increasing trends were both linear and logarithmic, respectively. Similarly, separate Monte Carlo simulations were also performed for TSS and total zinc assuming the associated predefined decreasing trends were linear and logarithmic. In general, the Mann Kendall trend test is a nonparametric measure of correlation that should be relatively effective for detecting non-linear trends (Helsel and Hirsch 2002).

## Assumed Variation

In general, the statistical power of the Mann Kendall trend test will decrease as the amount of variation within the dataset increases. For this analysis, the assumed variation across the synthetic time series datasets for B-IBI scores, TSS, and total zinc was defined using actual monitoring data for each parameter. Specifically, the Puget Sound Stream Benthos database was queried to obtain representative data for B-IBI scores from small streams in western Washington. This query yielded data from 1,431 sampling locations. These data were further processed to identify a subset of sampling locations with four or more B-IBI scores. This process yielded data from 522 sampling locations. The standard deviation of the B-IBI scores for each of these sampling locations was then computed. To obtain high, medium, and low estimates of the variation in B-IBI scores that might be encountered during the RPWS, the 75th, 50th (median), and 25th percentile values, respectively, were selected from all the standard deviation values computed for this subset of sampling locations (see Table 2). These estimates of variation in B-IBI scores were subsequently used to define the probability distributions for the synthetic times series datasets used in the Monte Carlo simulations.

For TSS and total zinc, the Washington State Department of Ecology's Environmental Information Management database was queried to obtain representative data from small streams in western Washington. These queries yielded data from 438 sampling locations for TSS and 63 sampling locations for total zinc. These data were further processed to identify a subset of sampling locations having greater than six samples for TSS and greater than 5 samples for total zinc, respectively. This processing yielded data from 81 sampling locations for TSS and 45 sampling locations for total zinc. The same process described above for the B-IBI scores was then used to generate high, medium, and low estimates of variation that might be encountered during the RPWS (see Table 2). These estimates of variation for TSS and total zinc were subsequently used to define the probability distributions for the synthetic times series datasets used in the Monte Carlo simulations.

# Results

Results from the power analyses are summarized in Tables 4, 5, and 6 for B-IBI scores, TSS, and total zinc, respectively. The results generally show the following predictable patterns:

- Power increases with increased annual sampling frequency
- Power decreases as the magnitude of the trend decreases
- Power decreases as the variability in the data increases
- Power is lower when trying to detect logarithmic trends relative to linear trends

Statistical power for detecting trends in B-IBI scores exceeded 80 percent in the majority of scenarios evaluated. In contrast, statistical power for detecting trends in TSS generally only exceeded 80 percent when the magnitude of the trend was a 4 mg/L decrease in concentration regardless of the sample size and standard deviation used in the scenario. Statistical power for detecting trends in total zinc exceeded 80 percent for multiple combinations of scenarios where the magnitude of the trend was at least a 2 mg/L decrease in concentration.

# References

Helsel, D.R. and R. M. Hirsch, 2002. Statistical Methods in Water Resources Techniques of Water Resources Investigations, Book 4, chapter A3. US Geological Survey. 522 pages.

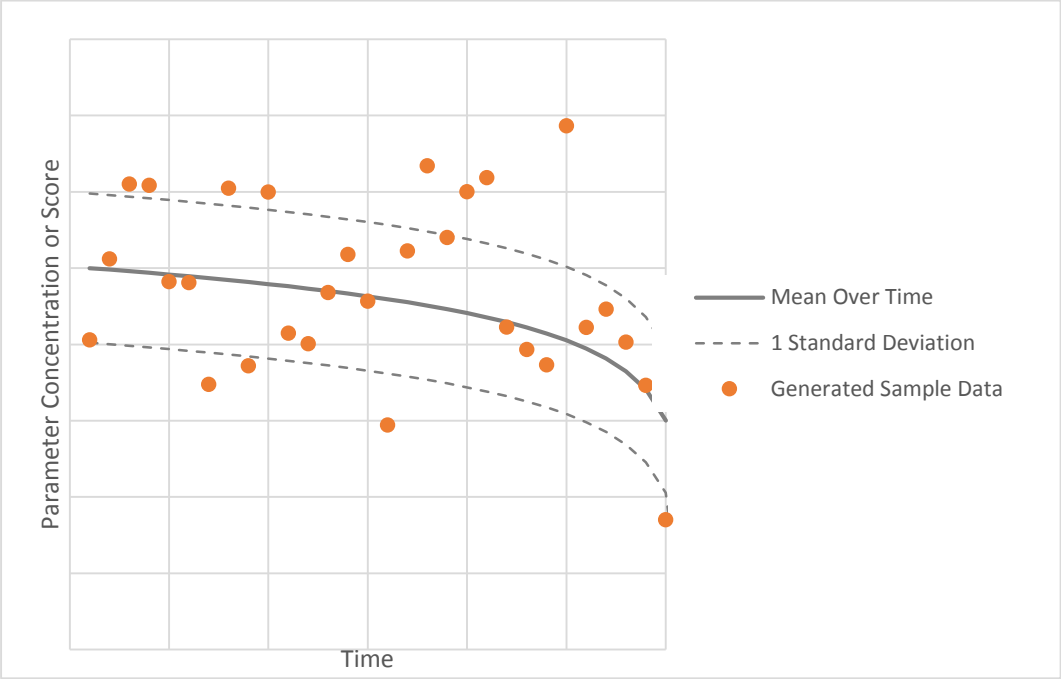


**Figure 1. Example Plot of a Sample Set that was Randomly Drawn from a Synthetic Time Series Dataset.**

**Table 1. Inputs for Monte Carlo Simulations Performed to Evaluate the Statistical Power of Mann Kendall Trend Tests.**

| | Total Suspended Solids | Total Zinc | BIBI |
|---|---|---|---|
| Initial Mean Concentration for Trend | 7.94 mg/L | 7.25 µg/L | 13 |
| | | | 22 |
| | | | 32 |
| Standard deviation around mean | 5.08 mg/L | 5.08 µg/L | 2.83 |
| | 9.81 mg/L | 9.81 µg/L | 3.90 |
| | 18.86 mg/L | 18.86 µg/L | 5.29 |
| Final Mean Concentration for Trend | 6.94 mg/L | 6.25 µg/l | 41 |
| | 5.94 mg/L | 5.25 µg/L | |
| | 3.94 mg/L | 3.25 µg/L | |
| Samples per Year | 12 | 12 | 1 |
| | 16 | 16 | 2 |
| | 20 | 20 | 3 |
| Trend Characteristic over Time | Linear | Linear | Linear |
| | Logarithmic | Logarithmic | Logarithmic |
| Total Number of Scenarios | 54 | 54 | 54 |

**Table 2. Estimates of Variation Used to Define the Probability Distributions for the Synthetic Times Series Datasets.**

| Percentile | B-IBI Standard Deviation[a] | Total Suspended Solids Standard Deviation[b] (mg/L) | Total Zinc Standard Deviation[b] (µg/L) |
|---|---|---|---|
| **25th** | 2.83 | 5.08 | 1.76 |
| **50th** | 3.90 | 9.81 | 7.06 |
| **75th** | 5.29 | 18.86 | 13.86 |

[a] Data obtained from the Puget Sound Stream Benthos database

[b] Data from obtained the Environmental Information Management database

B-IBI: benthic index of biotic integrity

**Table 3. Power Analysis Results for Benthic Index of Biotic Integrity (B-IBI) Scores.**

| Samples per Year | B-IBI Score at Trend Start | B-IBI Score at Trend Finish | Standard Deviation | Power Linear Trend | Power Logarithmic Trend |
|---|---|---|---|---|---|
| 1 | 13 | 41 | 2.83 | 100% | 100% |
| | | | 3.90 | 100% | 100% |
| | | | 5.29 | 100% | 100% |
| | 22 | 41 | 2.83 | 100% | 100% |
| | | | 3.90 | 100% | 99% |
| | | | 5.29 | 98% | 96% |
| | 32 | 41 | 2.83 | 96% | 91% |
| | | | 3.90 | 84% | 78% |
| | | | 5.29 | 71% | 63% |
| 2 | 13 | 41 | 2.83 | 100% | 100% |
| | | | 3.90 | 100% | 100% |
| | | | 5.29 | 100% | 100% |
| | 22 | 41 | 2.83 | 100% | 100% |
| | | | 3.90 | 100% | 100% |
| | | | 5.29 | 100% | 100% |
| | 32 | 41 | 2.83 | 100% | 98% |
| | | | 3.90 | 97% | 91% |
| | | | 5.29 | 90% | 79% |
| 3 | 13 | 41 | 2.83 | 100% | 100% |
| | | | 3.90 | 100% | 100% |
| | | | 5.29 | 100% | 100% |
| | 22 | 41 | 2.83 | 100% | 100% |
| | | | 3.90 | 100% | 100% |
| | | | 5.29 | 100% | 100% |
| | 32 | 41 | 2.83 | 100% | 100% |
| | | | 3.90 | 100% | 95% |
| | | | 5.29 | 96% | 86% |

**Table 4. Power Analysis Results for Total Suspended Solids (TSS).**

| Samples per Year | TSS Concentration at Trend Start (mg/L) | TSS Concentration at Trend Finish (mg/L) | Magnitude of Change (mg/L) | Standard Deviation (mg/L) | Power Linear Trend | Power Logarithmic Trend |
|---|---|---|---|---|---|---|
| 12 | 7.94 | 6.94 | -1 | 5.08 | 36% | 24% |
| | | | | 9.81 | 27% | 21% |
| | | | | 18.86 | 20% | 19% |
| | | 5.94 | -2 | 5.08 | 74% | 46% |
| | | | | 9.81 | 57% | 34% |
| | | | | 18.86 | 46% | 27% |
| | | 3.94 | -4 | 5.08 | 100% | 84% |
| | | | | 9.81 | 96% | 70% |
| | | | | 18.86 | 91% | 57% |
| 16 | | 6.94 | -1 | 5.08 | 41% | 28% |
| | | | | 9.81 | 31% | 22% |
| | | | | 18.86 | 29% | 20% |
| | | 5.94 | -2 | 5.08 | 82% | 49% |
| | | | | 9.81 | 63% | 37% |
| | | | | 18.86 | 52% | 30% |
| | | 3.94 | -4 | 5.08 | 100% | 88% |
| | | | | 9.81 | 99% | 73% |
| | | | | 18.86 | 95% | 66% |
| 20 | | 6.94 | -1 | 5.08 | 48% | 25% |
| | | | | 9.81 | 40% | 23% |
| | | | | 18.86 | 28% | 20% |
| | | 5.94 | -2 | 5.08 | 88% | 51% |
| | | | | 9.81 | 75% | 39% |
| | | | | 18.86 | 64% | 36% |
| | | 3.94 | -4 | 5.08 | 100% | 91% |
| | | | | 9.81 | 100% | 83% |
| | | | | 18.86 | 99% | 71% |

**Table 5. Power Analysis Results for Total Zinc.**

| Samples per Year | Total Zinc Concentration at Trend Start (mg/L) | Total Zinc Concentration at Trend Finish (mg/L) | Magnitude of Change (mg/L) | Standard Deviation (mg/L) | Power Linear Trend | Power Logarithmic Trend |
|---|---|---|---|---|---|---|
| 12 | 7.25 | 6.25 | -1 | 1.76 | 73% | 47% |
| | | | | 7.06 | 36% | 22% |
| | | | | 13.86 | 28% | 17% |
| | | 5.25 | -2 | 1.76 | 99% | 85% |
| | | | | 7.06 | 70% | 38% |
| | | | | 13.86 | 57% | 29% |
| | | 3.25 | -4 | 1.76 | 100% | 100% |
| | | | | 7.06 | 99% | 78% |
| | | | | 13.86 | 97% | 65% |
| 16 | | 6.25 | -1 | 1.76 | 85% | 48% |
| | | | | 7.06 | 38% | 24% |
| | | | | 13.86 | 34% | 24% |
| | | 5.25 | -2 | 1.76 | 100% | 89% |
| | | | | 7.06 | 78% | 46% |
| | | | | 13.86 | 60% | 38% |
| | | 3.25 | -4 | 1.76 | 100% | 100% |
| | | | | 7.06 | 100% | 86% |
| | | | | 13.86 | 99% | 73% |
| 20 | | 6.25 | -1 | 1.76 | 90% | 57% |
| | | | | 7.06 | 44% | 25% |
| | | | | 13.86 | 39% | 23% |
| | | 5.25 | -2 | 1.76 | 100% | 93% |
| | | | | 7.06 | 83% | 47% |
| | | | | 13.86 | 74% | 38% |
| | | 3.25 | -4 | 1.76 | 100% | 100% |
| | | | | 7.06 | 100% | 87% |
| | | | | 13.86 | 100% | 77% |

# APPENDIX B

# Typical Equipment Installations for Hydrologic Monitoring

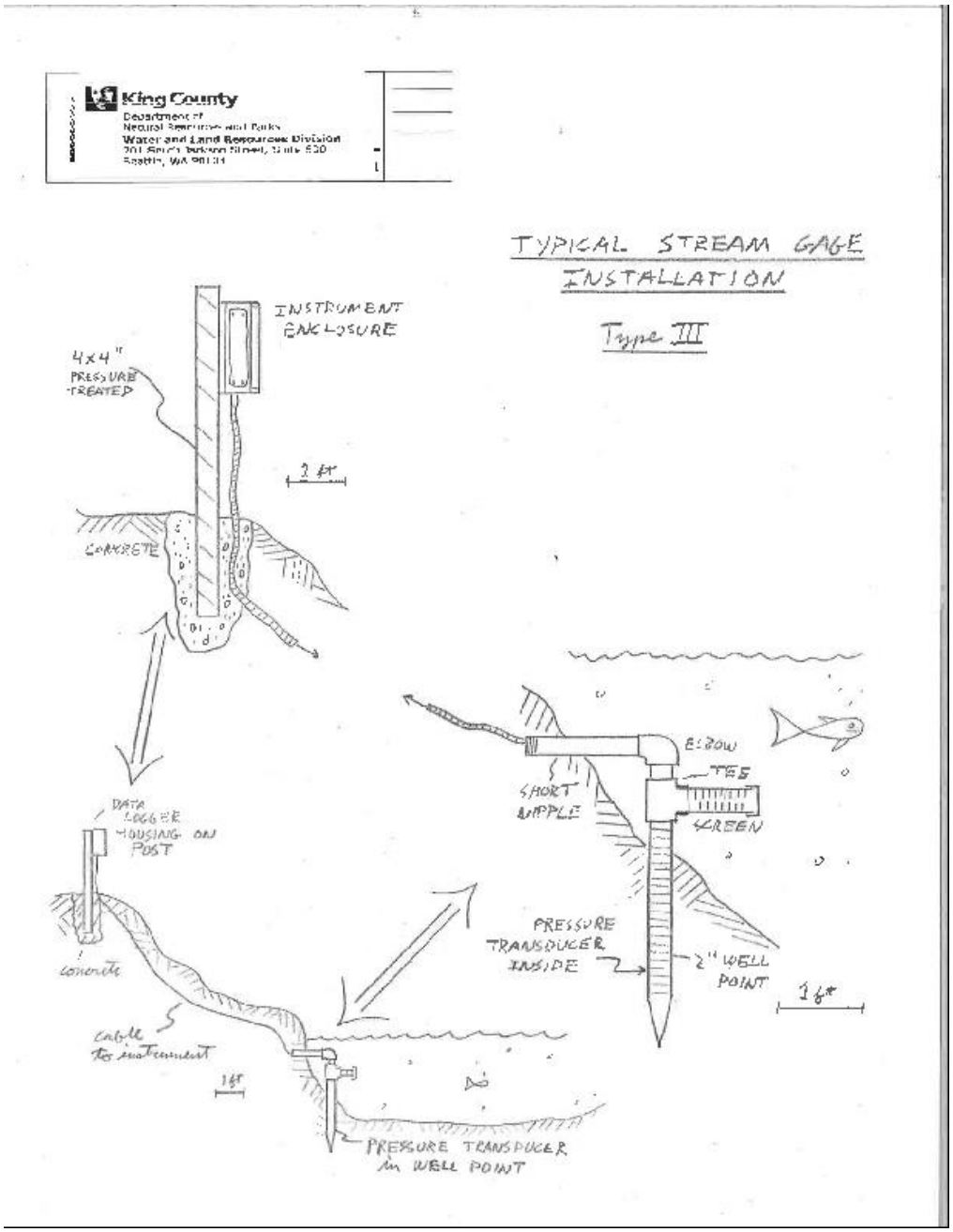
King County
Department of
Natural Resources and Parks
Water and Land Resources Division
TYPICAL STREAM GAGE
INSTALLATION
Type III
INSTRUMENT
ENCLOSURE
4x4"
PRESSURE
TREATED
3 ft
CONCRETE
ELBOW
TEE
SHORT
NIPPLE
SCREEN
DATA
LOGGER
HOUSING ON
POST
PRESSURE
TRANSDUCER
INSIDE
2" WELL
POINT
1 ft
concrete
cable
to instrument
1 ft
PRESSURE TRANSDUCER
in WELL POINT

# APPENDIX C

# Monitoring Equipment Specifications

*SWOFFER INSTRUMENTS, INC.*

# MODEL 3000

## *Current meter, Flow Calculator - Datalogger*

**Still the best Choice !**

*The new Model 3000 is a hand held computer and data logger designed specifically for the measurement of open channel velocities and the on-site computation of stream discharges (flow). Features Include:*

The Model 3000 Indicator is a data-logging version of the Model 2100, allowing the operator to input all measurement data usually kept on a clipboard while crossing a stream. The Model 3000 records depths, widths, velocities and angles along with time & date of measurements. It figures the "Q" and can upload all this information in spreadsheet-acceptable format to your PC for further study and

- Efficient *Photo-Fiber-Optic* sensor coupled with precision quartz crystal controlled electronics provide accurate repeatable data in most flow conditions.
- The *Model 3000* Indicator displays data in feet and meters per second. Toggle the 0 key at the main screen to change from one to the other.
- Velocity averaging is fully user adjustable. Anything from 1 to 999 seconds of averaging can be chosen. The *Model 3000* automatically powers up using your last averaging time period. If you use 40 seconds, it stays at 40 seconds until you change it.
- Velocities can be a single averaged measurement or can be the *accumulated average* of as many measurements as desired, all controlled from the keypad.
- Sensor components (propeller, rotor, and rotor shaft) are easily and inexpensively replaceable. Carry spares into remote locations and you'll never have to return early because of a bent propeller or bucketwheel, or a lost propeller magnet or rotor shaft.
- Wide choice of sensor carriers or "wands" to accommodate virtually any open stream velocity measuring requirement.
- Indicator keys are color coded, grouping related functions into like colors.
- Lightweight, portable system is easy to work with all day in the field. *Model 3000* Indicator uses the same rugged, weatherproof instrument housing as the earlier Model 2100 and Model 2200 but with added water incursion protection and data storage features.
- A simple and *accurate* method of user-accomplished calibration is provided with the *Model 3000*. No other current meter provides the user a method of checking and changing calibrations in the field.
- Calibration settings for 10 different sensors/propellers can be stored in the indicator and the *Model 3000* is completely compatible with all earlier Swoffer Instruments' sensors (Models 1000, 2000, 2100 and 2200).
- The *Model 3000* is also specifically designed to function with Price type AA & Pygmy current meters using either the optical adapters pioneered by Swoffer Instruments in the Models 2200 and USGS-HIF Optic-Head sensors or with meters using the newer magnetic head contactors. The Model 3000 can in fact be field calibrated to operate with <u>any sensor</u>

3000-1514 and 3000-1518 wands

3000-LX, 3000-STDX, 3000-12, -13, -14 wands

## *MODEL 3000 CURRENT METER SPECIFICATIONS **

| | |
|---|---|
| *VELOCITY RANGE* | 0.1 to 25 Feet Per Second (propeller meters) (0.03 to 7.5 Meters Per Second ) |
| *DISPLAY* | Two line by 16 character Liquid Crystal Digital. |
| *RESOLUTION* | To three decimals, both feet and meters. |
| *ACCURACY* | Can be held to within 1% with periodic user-required calibration tests and adjustments. |
| *DISPLAY AVERAGING* | User adjustable from 1 to 999 seconds. Remains unchanged with each power-up until purposely reset. Velocities obtained within each sampling period can be averaged with successive periods . |
| *OPERATING TEMPERATURE* | LCD Min. -4° F (-20°C)<br>Max. 158°F (70°C)<br>Sensor Min. 0° F (-17.8°C)<br>Max. 194° F (90°C) |
| *POWER REQUIRED* | Four AA batteries. Alkaline or rechargeable nicads. |
| *INDICATOR SIZE* | 4 by 6 by 2 inches (15.2 by 10.2 by 5.1 cm) |
| *INDICATOR WEIGHT* | 25 oz. (including 4 AA batteries). |
| *INDICATOR MATERIAL* | Vacuum-formed ABS with a clear acrylic viewing lens over the LCD. |
| *INDICATOR KEYPAD* | Back-printed polycarbonate in four colors plus black. Tactile feedback membrane type contacts with minimum actuation pressure required for long life and water resistance. |
| *FASTENERS* | Stainless Steel & Brass. |
| *SENSOR WAND MATERIALS* | Aluminum = 6061-T6, Stainless Steel = #303 |
| *SENSOR BODY AND ROTOR* | *Acetron GP (rotor body) & Ertalyte® TX, an internally lubricated thermoplastic polyester that provides enhanced wear over all previous rotor materials.* |
| *SENSOR PROPELLER* | Glass-filled nylon. 2" diameter is supplied. Other |

# HOBO® Waterproof Shuttle (U-DTW-1) Manual

The HOBO Waterproof Shuttle performs several major functions:

- Reads out all logger information (serial number, deployment number, data, etc.) from loggers in the field for transfer to host computer, and stores each logger's data in a "bank"
- Nonvolatile memory preserves data, even if batteries are depleted
- Relaunches the logger, resetting the logger's time to the shuttle's time and synchronizing the logging interval on relaunch
- Can be used as an optic-to-USB base station
- Can be used to read out and relaunch loggers underwater

Although the HOBO Waterproof Shuttle is easy to use, Onset strongly recommends that you spend a few minutes reading this manual and trying out the procedures described here before taking the shuttle into the field.

**HOBO Waterproof Shuttle**

U-DTW-1

*Included Items:*

- USB cable
- Set of couplers;
  - For UA Pendant (COUPLER2-A)
  - For U20 Water Level (COUPLER2-B)
  - For U20L Water Level, U22 Water Temp Pro v2, U24 Conductivity, and U26 DO (COUPLER2-C)
  - For UTBI TidbiT v2 (COUPLER2-D)
  - For U23 HOBO Pro v2 (COUPLER2-E)

*Required Items:*

- HOBOware 2.2 or later
- Compatible logger and matching coupler

## Specifications

| | |
|---|---|
| **Compatibility** | All HOBO U-Series loggers with optic USB. Not compatible with the HOBO U-Shuttle (U-DT-1). |
| **Data Capacity** | 63 logger readouts of up to 64K each |
| **Operating Temperature** | 0° to 50°C (32° to 122°F) |
| **Storage Temperature** | -20° to 50°C (-4° to 122°F) |
| **Wetted Materials** | Polycarbonate case, EPDM o-rings and retaining loop |
| **Waterproof** | To 20 m (66 feet) |
| **Time Accuracy** | ±1 minute per month at 25°C (77°F); see Plot A |
| **Logger-to-Shuttle Transfer Speed** | Reads out one full 64K logger in about 30 seconds |
| **Shuttle-to-Host Transfer Speed** | Full shuttle offload (4 MB) to host computer in 10 to 20 minutes, depending on computer |
| **Batteries** | 2 AA alkaline batteries required for remote operation |
| **Battery Life** | One year or at least 50 complete memory fills, typical use |
| **Weight** | 150 g (4 oz) |
| **Dimensions** | 15.2 x 4.8 cm (6.0 x 1.9 inches) |
| CE | The CE Marking identifies this product as complying with all relevant directives in the European Union (EU). To maintain CE compliance, this product must be used with the supplied USB cable or equivalent (less than 3 m long). |

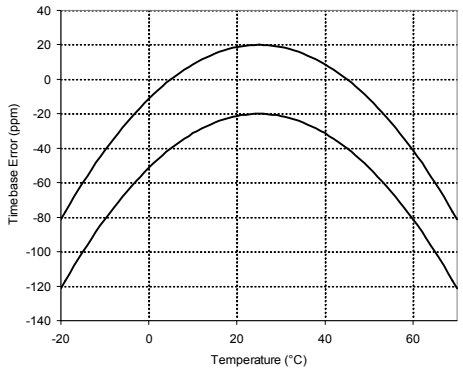


**Plot A**

## HOBO Waterproof Shuttle Features

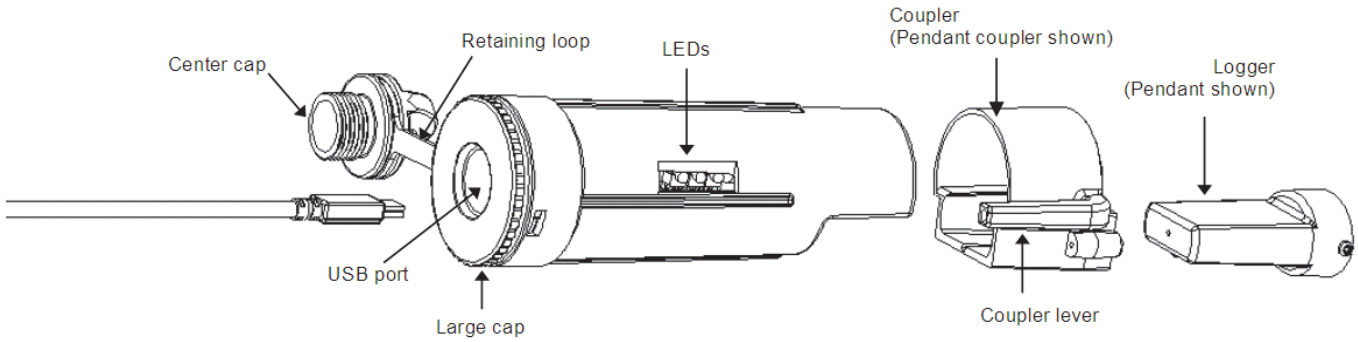


## Preparing to Go on Location

Before using the shuttle for the first time, you must launch it with HOBOware 2.2 or greater. You must also launch any compatible loggers that were last launched with an earlier version of HOBOware, or have never been launched at all.

1. Use HOBOware 2.2 or greater to launch each logger you wish to read out and relaunch with the shuttle later. (Read "Using the shuttle as a base station" for instructions if you do not have another base station for the loggers.) The shuttle cannot relaunch loggers that were last launched with an earlier version of HOBOware. (You only have to do this once for each logger.)
2. Plug the large end of a USB interface cable into a USB port on the computer. (Avoid using a USB hub, if possible.)
3. Unscrew the center cap on the shuttle. If the cap is too tight to loosen by hand, insert a screwdriver through the lanyard hole and rotate counterclockwise until the cap is loosened.
4. Plug the small end of the USB interface cable into the USB port in the shuttle. (If the shuttle has never been connected to the computer before, it may take a few seconds for the new hardware to be detected.)
5. Follow the instructions in the *HOBOware User's Guide* to access the **Manage Shuttle** dialog. Make sure the battery level is good, and change the batteries now if they are weak.

**Important:** If you change the batteries in the field, the shuttle's clock will stop, and the shuttle will not read out loggers again until you relaunch it in HOBOware.

6. If you are using the shuttle for the first time, launch the shuttle as described in the *HOBOware User's Guide*. Launching synchronizes the shuttle's clock to the host computer and initializes the shuttle's header.

**Important:** The shuttle's clock is used to set the logger's clock at relaunch. For most accurate results, make sure the host computer's clock is correct before launching the shuttle. If you need to adjust the computer's clock, quit HOBOware, set the computer's clock, then reopen HOBOware and launch the shuttle.

7. If you have used the shuttle before, make sure there are enough banks available to accommodate the loggers you plan to read out.
8. Disconnect the USB cable from the shuttle and replace the center cap securely.

## Reading Out and Relaunching Loggers in the Field

After you have ensured that the shuttle's batteries are good, there is sufficient memory available, and the shuttle's clock is synchronized, follow these steps to read out and relaunch a logger in the field:

1. Make sure the shuttle's large cap and center cap are closed securely. Tighten the center cap until it is just flush with the large cap, or until the O-ring is no longer visible.
2. Make sure the communication end of the shuttle is clean. Attach the correct coupler for the logger, and ensure that it is seated properly.
3. Insert the logger into the coupler, following the instructions that came with the coupler.
4. Momentarily press the coupler lever (pressing hard enough so the lever bends).

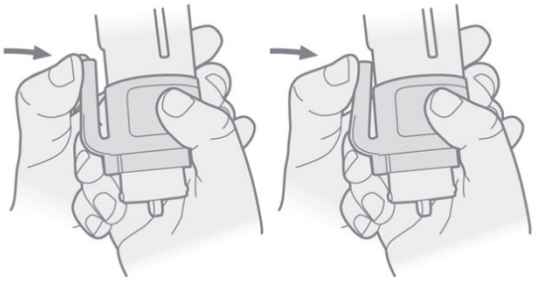

Readout should begin immediately. The amber LED blinks continuously while readout and relaunch are in progress. Do not remove the logger when the amber LED is blinking.

5. After reading out the logger, the shuttle synchronizes the logger's clock to the shuttle's internal clock and relaunches the logger, using the description, channels to log, logging interval, and other settings that are already in the logger. (If the logger was launched with multiple logging intervals, the final defined logging interval will be used.) The logger is

launched with a slight delay that causes its readings to be synchronized with those of the previous deployment, as shown in the following diagram.

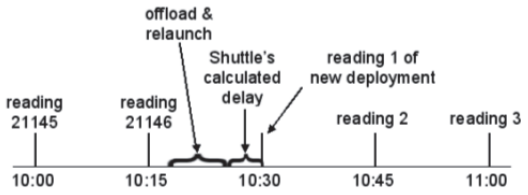


**Important:** If the logger was launched with multiple logging intervals, there will be no synchronizing delay. The logger will start immediately with the last defined logging interval.

6. When the relaunch has completed, the green LED blinks for 15 minutes, or until you momentarily press the coupler lever to stop it (press hard enough so the lever bends). If the red LED blinks instead, there was an error, and the logger may have stopped. Refer to "Troubleshooting" in this manual for details.
7. Remove the logger from the coupler.

## Checking Shuttle Status in the Field

The shuttle's memory has 63 "banks." One logger readout can be stored in each bank. To check the shuttle's memory and batteries in the field, remove the logger and press the coupler's lever for at least three seconds (pressing hard enough so the lever bends). When you release the lever, the green LED blinks once for each unoccupied bank in the shuttle's memory. (Press the lever momentarily to stop the blinking, pressing hard enough so the lever bends.)

If the shuttle's batteries are running low, all of the shuttle banks are full, or the clock has not been set, the red LED blinks. (Press the lever momentarily to stop the blinking, pressing hard enough so the lever bends) Use HOBOware to check the shuttle's battery level, available memory, and clock. You may need to change the batteries, or offload the datafiles to the host computer and delete them from the shuttle to free up memory before you can continue reading out loggers.

## Offloading Data to the Host Computer

You can offload the data stored in the shuttle even when the batteries are depleted. Take the following steps:

1. Connect the shuttle to a host computer running HOBOware.
2. Follow the instructions in the *HOBOware User's Guide* to offload the new datafiles or access the **Manage Shuttle** dialog. The **Manage Shuttle** dialog shows you how many banks are occupied, and whether they have already been offloaded and saved to the host computer.
3. Offload and save data from the banks of your choice. Refer to the *HOBOware User's Guide* for details on saving datafiles offloaded from the shuttle.
4. Review the list of banks and delete any that are no longer needed. Make sure the battery level is good, and change the batteries now if they are weak. (If you change the batteries in the field, the shuttle's clock will stop, and the shuttle will not read out loggers.) Update the shuttle's clock, if necessary.
5. When finished, disconnect the shuttle from the computer and close the center cap securely.

## Using the Shuttle as a Base Station

You can use the shuttle as a base station for any U-Series logger with an optic USB interface. (This function is available even when the batteries are depleted.) To use the shuttle as a base station:

1. Connect the shuttle to the host computer running HOBOware.
2. Attach a compatible logger and coupler.
3. Momentarily press the coupler's lever (pressing hard enough so the lever bends).
4. The amber LED blinks momentarily, then the green LED should glow steadily to indicate that the logger is ready to communicate with HOBOware. (If the red LED blinks instead, the logger was not found. Make sure the logger and coupler are aligned and seated properly, and that there is no dirt or strong sunlight interfering with communications.)
5. When finished, remove the logger from the coupler. The green LED stops glowing when you disconnect the logger or the USB cable.

**Important**: The Waterproof Shuttle cannot be used *as a base station* with Pendant logger models UA-001 and UA-003 (including rain gauges RG3 and RG3-M) with serial numbers less than 988278. These loggers require a BASE-U-1 for communication with the host computer.

## Indicator Lights

**Green "OK" LED**
The green "OK" LED blinks when HOBOware recognizes it as a base station; when it finishes reading out and relaunching a logger; and when you press the coupler lever to check the shuttle's status (see "Checking shuttle status in the field" for details). Momentarily press the coupler lever to stop the blinking (pressing hard enough so the lever bends).

The green LED glows steadily when the shuttle is being used as a base station.

**Amber "Transfer" LED**
The amber "Transfer" LED blinks when the shuttle is reading out a logger and relaunching it. Do not remove the logger when the Transfer light is lit.

**Red "Fail" LED**
The red "Fail" LED blinks whenever the shuttle encounters an error condition. Refer to "Troubleshooting" for details.

**All LEDs**
All LEDs blink in unison when the shuttle has just been powered up, either by installing fresh batteries or (if batteries are not installed) by connecting to the computer's USB port.

## Troubleshooting

This section describes problems you may encounter while using the shuttle.

**Shuttle is not recognized by host computer**
If HOBOware does not recognize the shuttle when you connect it to the computer, simply disconnect and reconnect the shuttle.

**Red "Fail" LED blinks**
The red "Fail" LED blinks (for 15 minutes, or until you press the coupler lever, pressing hard enough so the lever bends) whenever the shuttle encounters an error. There are several conditions that might cause an error:

- **Shuttle is full:** If the red LED blinks when you try to read out a logger, check whether all of the banks are full, as described in "Checking shuttle status in the field." Or, use HOBOware to check the shuttle's memory.
- **Shuttle batteries are low:** If you cannot read out any loggers at all, check the logger's status, as described in "Checking shuttle status in the field," or use HOBOware to check the shuttle's batteries. The batteries may simply need to be replaced.
- **Compatibility:** The shuttle cannot read out or relaunch loggers that were last launched from HOBOware prior to version 2.2. You will need to read out these loggers on the host computer and relaunch them in HOBOware 2.2 or greater before you can use them with the shuttle.
- **Shuttle clock is not set:** The shuttle has experienced a power failure that caused the clock to reset. You must use HOBOware to offload the files that are already on the shuttle, then relaunch the shuttle before you can read out another logger.
- **Can't communicate with logger:** Remove the logger and coupler. Inspect them and the shuttle to ensure that all are free of dirt that could block the optic communication sensor. Carefully reassemble the shuttle, coupler, and logger, and make sure they are all seated properly. Shield the shuttle from strong sunlight, if applicable, which can interfere with optic communications.
- **Other logger problems:** If you can read out some loggers but not others, or if you cannot read out any loggers even with fresh batteries in the shuttle, check the loggers in HOBOware. Make sure their batteries are at acceptable levels and that there is no "corrupted header" message.

**Amber "Transfer" LED stays on without blinking**
The amber light is magnetically activated when you press the coupler lever. If it glows steadily at any other time, the magnet in the lever may be too close to the magnetic switch in the shuttle, or another strong magnet may be present. Try bending the lever away from the coupler to reduce the magnet's effect.

**LEDs do not function**
If the LEDs are not functioning at all, the batteries may be completely exhausted. To test this, attach the shuttle to the host computer and check the battery level. The shuttle should be able to communicate with the host computer, blink its LEDs normally, and perform as a base station even when the batteries are missing or depleted.

## Replacing the Shuttle's Batteries

The shuttle's batteries should last about one year or at least 50 complete memory fills in typical conditions. When the shuttle's batteries run low (2.2 V or less), any logger data that is already in the shuttle will remain safe, but the shuttle will not read out another logger until its batteries are replaced.

To avoid battery problems, always check the shuttle's batteries in HOBOware before going into the field, and replace them if needed. If you cannot replace the bad batteries right away, you should remove them as soon as possible to ensure that they do not leak and damage the shuttle.

To change the shuttle's batteries:

1. Work over a clean surface to provide a safe platform for the disassembly.
2. Unscrew the center cap on the shuttle. If the cap is too tight to loosen by hand, insert a screwdriver through the lanyard hole and rotate counterclockwise until the cap is loosened.
3. Use the center cap to help you carefully pull the rubber loop free of the large cap. The large cap cannot be removed while the rubber loop is in place.

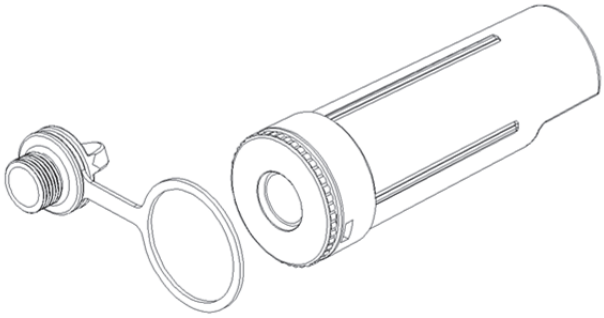

4. Turn the large cap counter-clockwise slightly, then pull it off.

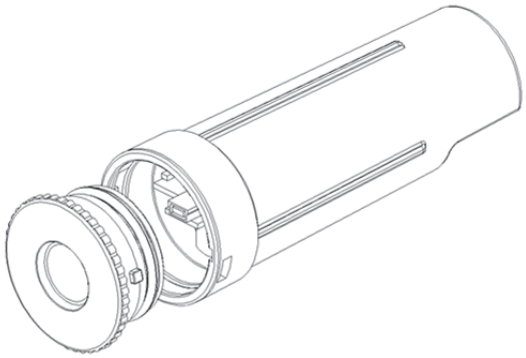

5. Turn the shuttle over and tap it gently. The circuit board should slide into your hand.

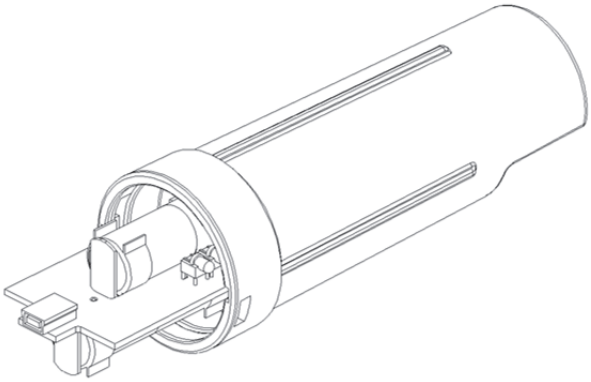

6. Remove the old batteries and install two new ones in the correct orientation. Both batteries should be turned the same way, with their positive ends facing the USB port on the board. (When the second battery makes contact, all of the shuttle's LEDs will blink in unison.)
7. Put the board back into the case, taking care not to bend the communication LEDs. Align the circuit board with the runners in the case. The USB port should face the open end of the shuttle, and the LEDs should show through the window on the label.
8. Close the shuttle's case. Line up the tabs on the large cap with the slots on the case, press gently, and turn slightly clockwise until the large cap is closed securely.
9. Replace the rubber loop and center cap. Tighten the center cap until it is just flush with the large cap, or until the O-ring is no longer visible.
10. Using HOBOware, offload any datafiles that are on the shuttle and launch the shuttle before going into the field again. The shuttle will not read out and relaunch loggers until the clock has been synchronized.

**WARNING:** Do not install batteries backwards, recharge, put in fire, expose to extreme heat, or mix with other battery types, as the batteries may explode or leak. Contents of an open or leaking battery can cause chemical burn injuries. **Replace all used batteries at the same time.** Recycle or dispose of batteries according to applicable federal, state, and local regulations.



© 2006–2015 Onset Computer Corporation. All rights reserved. Onset, HOBO, and HOBOware are trademarks or registered trademarks of Onset Computer Corporation. All other trademarks are the property of their respective companies.

# CT2X Submersible Smart Sensor

CONDUCTIVITY/TEMPERATURE WITH DEPTH/LEVEL OPTION

AquiStar™
Data Collection Systems

## APPLICATIONS

- Wetland surveys
- Saltwater intrusion monitoring
- Agricultural runoff studies
- Discharge monitoring

## Measure and record conductivity, temperature, depth/level, salinity, all with one low power, easy-to-use smart sensor

### Features

- Measures and records conductivity, temperature, and time with depth/level option
- Low power — *field replaceable batteries*
- Modbus® RTU (RS485) and SDI-12 interface — *great flexibility*
- 0 – 300,000 microSiemens/cm
- Also measures salinity and TDS
- Linear and nLFn temperature compensation
- Small diameter — *0.75" (1.9 cm)*
- 349,000 records in non-volatile memory — *no data loss in the event of a power failure*
- Wireless connectivity — *radios and/or cellular*
- Barometric compensation utility for use with absolute sensors
- Free, easy-to-use software

### EASY-TO-USE SOFTWARE

- Easy, in-field calibration
- Flexible logging sequences
- Real-time viewing
- Easy export to spreadsheets and databases
- Firmware upgradable in the field

INW™
A Division of Seametrics

*True data, measure by measure*

ISO 9001:2008 ISO CERTIFIED

1-800-PRO-WELL
WWW.INWUSA.COM
CE

# CT2X Submersible Smart Sensor Conductivity/Temperature with Depth/Level Option

AquiStar™ Data Collection Systems

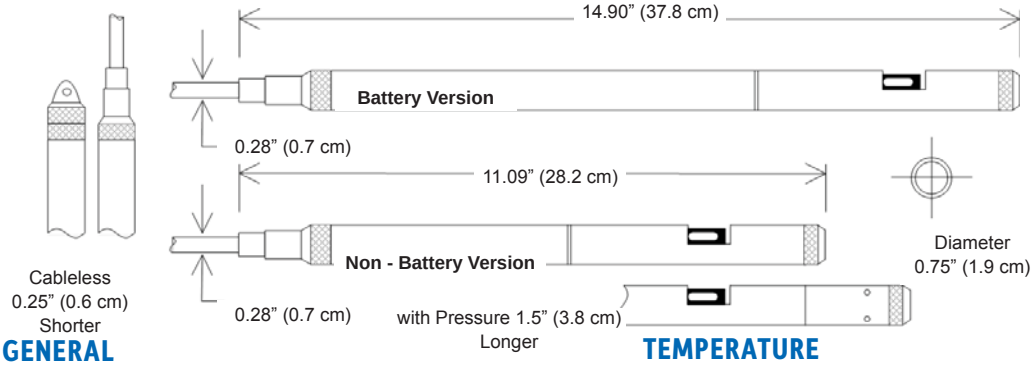


[1] *Storage without batteries*

[2] *Requires freeze protection kit if using pressure option in water below freezing*

[3] *Approx. 650 feet or 200 meters*

[4] *Higher pressure ranges available upon request*

[5] *Accuracy reduced at levels <10 µS/cm and >100,000 µS/cm*

[6] *May vary due to environmental factors*

[7] *±0.25% accuracy FSO (max) at this range*

[8] *Depth range for absolute sensors has 14.7 PSI subtracted to give actual depth allowed.*

## GENERAL

| | w/pressure | w/o pressure |
|---|---|---|
| **Length w/batteries** | 16.40" (41.6 cm) | 12.59" (32.0 cm) |
| **Length w/o batteries** | 14.90" (37.8 cm) | 11.09" (28.2 cm) |
| | *Cableless 0.25" (0.6 cm) shorter* | |
| **Diameter** | 0.75" (1.9 cm) | |
| **Weight** | 1.0lb. (0.5 kg) | |
| **Body Material** | Acetal & 316 stainless *or* titanium | |
| **Wire Seal Materials** | Fluoropolymer and PTFE | |
| **Submersible Cable** | Polyurethane, polyethylene, *or* ETFE | |
| **Cable Weight** | 4lbs./100 ft (1.8 kg/30 m) | |
| **Protection Rating** | IP68, NEMA 6P | |
| **Desiccant** | 1-3mm indicating silica gel *(high or standard capacity)* | |
| **Terminating Connector** | Available | |
| **Communication** | RS485 Modbus® RTU | |
| | SDI-12 (ver.1.3) | |
| **Recommended Operating Temp. Range[2]** | -5° C to 40° C | |
| **Storage Temp. Range[1]** | -40° C to 80° C | |

## LOGGING

| | |
|---|---|
| **Memory** | 4MB - 349,000 records |
| **Log Types** | Variable, user-defined, logarithmic, profiled |
| **Programmable Baud Rate** | 9600, 19200, 38400 |
| **Logging Rate** | 4x/sec maximum |
| **Software** | Complimentary Aqua4Plus and Aqua4Plus Lite |
| **Networking** | 32 available addresses per junction w/ batching capabilities (up to 255) |
| **File Formats** | .xls / .csv / .a4d |

## POWER

| | |
|---|---|
| **Internal Battery** | 2 x 1.5V AA |
| **Auxiliary Power** | 12VDC - Nominal |
| | 6-15VDC - Range |
| **Exp. Alkaline Battery Life** | 12 months at 15m polling interval[6] |

## TEMPERATURE

| | |
|---|---|
| **Element Type** | 30K ohm thermistor |
| **Element Material** | Epoxy bead/external housing |
| **Accuracy** | ± 0.25°C |
| **Resolution** | 0.1° C |
| **Range** | -5° C to 40° C |
| **Units** | Celsius, Fahrenheit, Kelvin |

## DEPTH/LEVEL

| | |
|---|---|
| **Transducer Type** | Silicon strain gauge |
| **Transducer Material** | 316 stainless steel or titanium |
| **Units** | PSI, $FtH_2O$, $inH_2O$, $cmH_2O$, $mmH_2O$, $mH_2O$,inHg, cmHg, mmHg, Bars, mBars, kPa |
| **Static Accuracy** | ± 0.05% FSO (typical)<br>± 0.1% FSO (maximum)<br>*(B.F.S.L. 20°C)* |
| **Resolution** | 0.0034% FS (typical) |
| **Maximum Operating** | 1.1 x FS |
| **Over Range Protection** | 3x FS (for > 300psi, contact INW)[3] |
| **Burst Pressure** | 1000psi (approx. 2000 feet or 600 meters) |
| **Compensated Range** | 0°C to 40°C |

### PRESSURE RANGES[4]

| | |
|---|---|
| **Gauge** | |
| *PSI* | 1[7], 5, 15, 30, 50, 100, 300 |
| *$FtH_20$* | 2.3[7],12, 35, 69, 115, 231, 692 |
| *$mH_2O$* | 0.7[7],3.5,10.5,21,35,70,210 |
| **Absolute[8]** | |
| *PSI* | 30, 50, 100, 300 |
| *$FtH_20$* | 35, 81, 196, 658 |
| *$mH_20$* | 10, 24, 59, 200 |

## CONDUCTIVITY

| | |
|---|---|
| **Probe Material** | Epoxy/Graphite |
| **Electrode** | 4-pole |
| **Static Accuracy** | ± 0.5% of measured value (0-100,000 µS/cm) |
| **Resolution** | 32 bit |
| **Ranges** | |
| *Conductivity[5]* | 0-300,000 µS/cm |
| *TDS* | 4.9-147,000 mg/L |
| *Salinity* | 2-42 PSU |
| **Units** | µS/cm, mS/cm, mg/L, PSU |
| **Resolution** | 0.1 µS/cm / 0.001 mS/cm / 0.1 mg/L (TDS) / 0.001 PSU |
| **Warm-Up Time** | 200 msec |
| **Thermal Compensation** | None, linear, or nLFn |

©2015 Seametrics. All rights reserved. INW and AquiStar are registered trademarks of Seametrics. Modbus is a registered trademark of Schneider Electric.
Information in this document is subject to change without notice. Doc# 6D0040r25 8/26/15

**INW**, A division of Seametrics
**SALES & SERVICE**
19026 72nd Avenue South
Kent, WA 98032 USA
253.872.0284
FAX 253.872.0285 / info@inwusa.com

1-800-PRO-WELL
WWW.INWUSA.COM
INW™ A Division of Seametrics

# HACH FH950 HANDHELD FLOW METER

### Applications

- Wastewater
- Collection Systems
- Environmental

## The perfect handheld solution for wastewater and environmental flow monitoring.

Knowledge gained through years of in-the-field flow measurement experience has come together in the Hach FH950 Handheld Flow Meter. Designed for use in both environmental and sewer/wastewater flow measurement scenarios—whether you're profiling streams and rivers or providing redundant verification of wastewater flow data—even the smallest hassles have been addressed. And the result for you? Massive time savings. From the field to the office, the Hach FH950 increases your efficiency at every turn.

### Designed for Accuracy and Efficiency

The lightweight, battery-powered Hach FH950 was designed to provide accurate velocity and level measurements while simplifying the entire measurement process in rugged field environments. Multiple user-friendly features designed into the FH950 allow you to quickly and easily determine stream velocities for required discharge measurements, calibrate area velocity flow meters, or verify primary devices such as weirs and flumes.

### Easy Programming and Data Transfer

The FH950's rugged, lightweight and user-friendly design allows for easy set-up, operation and data management. With an easy-to-use, menu-driven user interface that is readable even in bright sunlight, the FH950 has the ability to store both velocity and level information right within the meter, minimizing field time by up to 50%. Once the data is collected, simply download to a PC via the USB connection, eliminating the need for labor intensive manual data transfer.

### Maintenance-Free Electromagnetic Sensor

Available with either Velocity or Velocity and Level capabilities, the FH950's electromagnetic sensor has no moving parts and never requires mechanical maintenance, making it one of the lowest maintenance solutions on the market.

### Smart Sensor Capabilities

With an innovative and compact sensor shape with intelligently-designed flow characteristics, the FH950 delivers reliable measurements at low velocities, in very shallow water, and in turbulent flow conditions. It even takes accurate readings in sediment, weed or organic debris-choked water. Plus, with an optional pressure cell for automatic level measurement and sensor positioning, the Hach FH950 is known for having as much brain as it has brawn.

*Quickly profile streams and rivers. Easily verify other metering tools or use to select optimal monitoring sites.*

MARSH McBIRNEY SIGMA

HACH® Be Right™

# Specifications*

## Sensor

VELOCITY MEASUREMENT

| | |
|---|---|
| **Method** | Electromagnetic |
| **Accuracy** | ±2% of reading ±0.05 ft/s (±0.015 m/s) through the range<br>0 to 10 ft/s (0 to 3.04 m/s); ±4% of reading from 10 to 16 ft/s. (3.04 to 4.87 m/s) |
| **Zero Stability** | ±0.05 ft/s (± 0.015 m/s) |
| **Resolution** | 0.01 value <100; 0.1 value <1000; 1.0 value ≥1000 |
| **Range** | 0 to +20 ft/s (0 to +6.09 m/s) |

LEVEL MEASUREMENT

| | |
|---|---|
| **Method** | Diaphragm type: Absolute pressure with single point calibration |
| **Accuracy (static)** | The larger of ±2% of reading or ±0.504 in (0.015 m). Steady state temperature and static non-flowing water. |
| **Range** | 0 to 10 ft (0 to 3.05 m) |
| **Resolution** | 0.01 value <100; 0.1 value <1000; 1.0 value ≥1000 |
| **Minimum Water Level** | 1.25 in (3.18 cm) |

GENERAL ATTRIBUTES

| | |
|---|---|
| **Material** | ABS, glass-filled |
| **Environmental Rating** | IP68 |
| **Dimensions of Sensor** | 4.7" L x 1.7" W x 2.5" H (11.9 cm L x 4.3 cm W x 6.3 H cm) |
| **Cable Material** | Polyurethane jacketed |
| **Cable Lengths** | 6.5, 20, 40, and 100 ft. (2, 6.1,12.2, and 30.5 m) |

## Portable Meter

GENERAL ATTRIBUTES

| | |
|---|---|
| **Material** | Polycarbonate with a thermoplastic elastomer (TPE) overmold |
| **Environmental Rating** | IP67 |
| **Dimensions of Portable Meter** | 8.6" L x 3.7" W x 2.1" H (21.8 L x 9.3 W x 5.3 H cm) |
| **Storage Temperature Range** | -4 to 140°F (-20 to 60°C) |
| **Operating Temperature Range** | -4 to 131ºF (-20 to 55ºC) |
| **Battery Charge Temperature Range** | 32 to 104°F (0 to 40°C) |
| **Battery Type** | Lithium-Ion, rechargeable |
| **Battery Life Gauge** | 5 segment bar graph |
| **Battery Life** | 18 hours heavy typical day use†; 68°F (20°C) |

*†Defined as 30 minutes of set up, 6 one-hour periods of continuous use with sensor active and display at maximum brightness, 30 minutes of sleep mode between use periods, data download and power off.*

| | |
|---|---|
| **Battery Charger** | AC wall outlet charger |
| **USB Connector** | Type Mini-B, 5-pin, rated to IP67 when capped |

USER INTERFACE AND PROGRAMMING

| | |
|---|---|
| **Graphics Display** | Color, LCD; 3.5" QVGA, transflective (readable in direct sunlight) |
| **Measurement Resolution** | 0.01 value <100; 0.1 value <1000; 1.0 value ≥1000 |
| **Keypad** | Alpha-numeric |
| **Operating Modes** | Real-time, Profiling |
| **Profiling Types** | Stream, Conduit |
| **Conduit Shapes** | Circular, Rectangular, Trapezoidal, 2/3 Egg, Inverted 2/3 Egg |
| **Stream Entries** | Fixed, Non-Fixed Stations |
| **Firmware** | Sensor and portable meter firmware are field upgradeable via USB |
| **Noise Rejection** | User selectable 50Hz, 60Hz |
| **Units of Measure** | Velocity: ft/s, m/s, cm/s, mm/s<br>Flow: $ft^3$/sec, million gal/day, gal/day, gal/min, $m^3$/sec, $m^3$/min, $m^3$/hour, $m^3$/day, liters/s, liters/min<br>Level: in, ft, m, cm, mm |
| **Stream Flow Calculation** | Mean-section, Mid-section |
| **Diagnostics** | Self test, keypad, display, event log |
| **Conduit Profile Methods** | 0.9 x Vmax, 0.2/0.4/0.8, velocity and level integrator, 2D |
| **Stream Profile Methods** | 1, 2, 3, 5 and 6 point (Velocity method - USGS and ISO) |
| **File Types** | Real-time, Profiling, Event Log |
| **Profiles** | Data storage for up to 10 profiles with 32 stations per profile. |
| **Maximum Number of Real-Time Files** | Three each with up to 75 readings captured by the user. |
| **Language Support** | English, Bulgarian, Chinese, Czech, Danish, Dutch, Finnish, French, German, Greek, Hungarian, Italian, Japanese, Korean, Polish, Portuguese, Romanian, Russian, Slovenian, Spanish, Swedish, Turkish |

**Subject to change without notice.*

## Dimensions

In inches and [millimeters}.

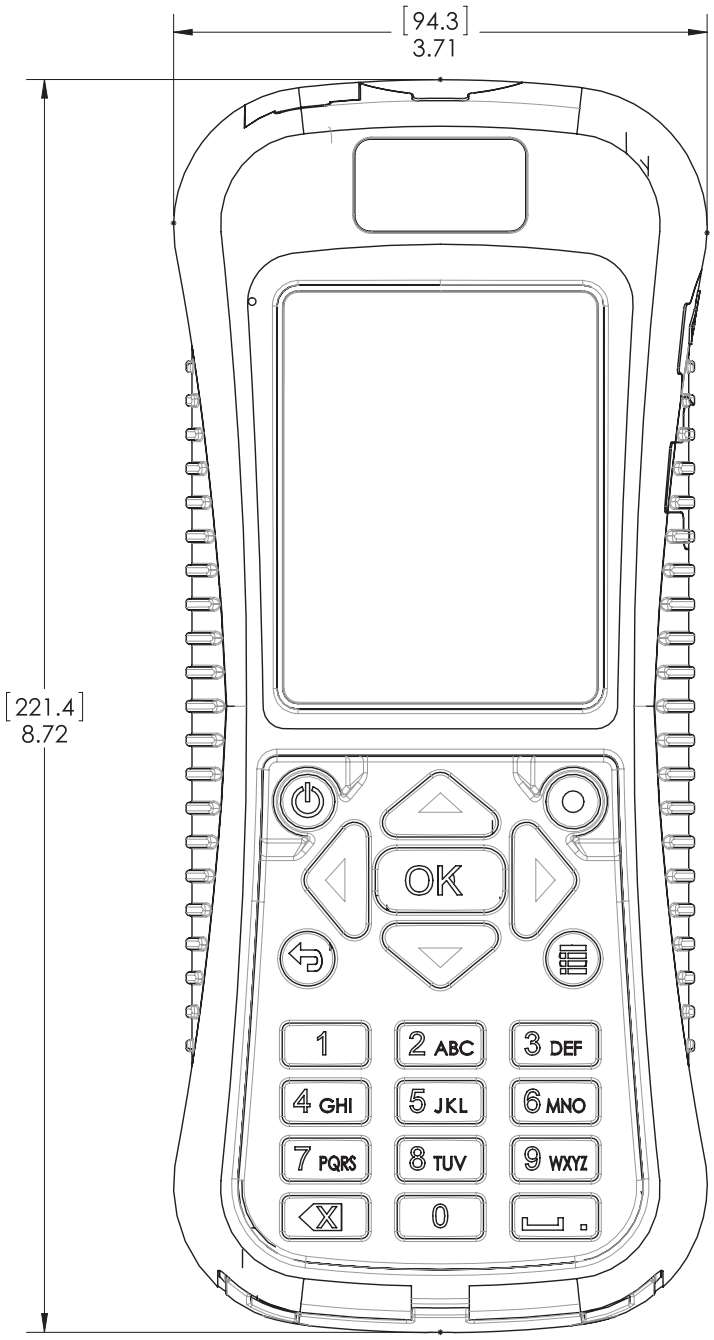


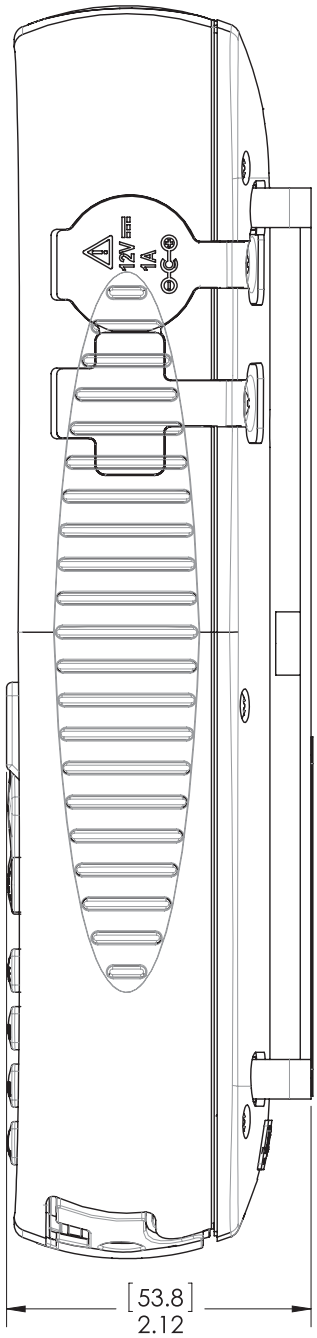

# Ordering Information

## FH950 Portable Flow Meter System

System includes portable flow meter, electromagnetic sensor with specified cable length, universal sensor mount, USB cable, wading rod mount, power supply/charger, neck strap, thumb screw kit, soft case, and disposable cloth for cleaning.

| FH950 Meter and Sensor System | FH950. | 1 | X | X | X | X |
|---|---|---|---|---|---|---|
| **Portable Meter (Hach FH950, with User Manual)** | | 1 | | | | |
| **Electromagnetic Sensor (Velocity)** | | | 0 | | | |
| **Electromagnetic Sensor (Velocity and Level)** | | | 1 | | | |
| **Cable Length** | | | | | | |
| 6.5 foot (2m) | | | | 0 | 0 | 5 |
| 20 foot (6.1m) | | | | 0 | 2 | 0 |
| 40 foot (12.2m) | | | | 0 | 4 | 0 |
| 100 foot (30.5m) | | | | 1 | 0 | 0 |

## Replacement Parts & Accessories

*FH950 Portable Meter*

**FH950.1** FH950 Handheld Flow Meter (includes battery, battery charger and meter), English

*Electromagnetic Sensors*

**EM950.0005** Velocity Sensor w/6.5 ft (2 m) cable
**EM950.0020** Velocity Sensor w/20 ft (6.1 m) cable
**EM950.0040** Velocity Sensor w/40 ft (12.2 m) cable
**EM950.0100** Velocity Sensor w/100 ft (30.5 m) cable
**EM950.1005** Velocity and Level Sensor w/6.5 ft (2 m) cable
**EM950.1020** Velocity and Level Sensor w/20 ft (6.1 m) cable
**EM950.1040** Velocity and Level Sensor w/40 ft (12.2 m) cable
**EM950.1100** Velocity and Level Sensor w/100 ft (30.5 m) cable

*Accessories*

**9073400** Fabric Carrying Case
**9073600** Lithium Ion Battery
**9072600** Battery Charger
**9070800** USB Cable, 3 ft (1 m)
**75015** Universal Sensor Mount
**9071700** Adjustable Meter Mount
**9073500** Wipe Cloth, used for cleaning
**9073200** Sensor Thumb Screw Kit
**9072700** Lanyard

*Contact factory for information on Standard and Top Setting Wading Rod Kits or Suspension Cable Kits.*

*NOTE: Additional cable cannot be added after order is entered.*

## HACH COMPANY World Headquarters: Loveland, Colorado USA

United States: 800-368-2723 tel 970-619-5150 fax hachflowsales@hach.com
Outside United States: 970-622-7120 tel
**hachflow.com**

LIT2568 Rev 5
A142.5 Printed in U.S.A.
©Hach Company, 2014. All rights reserved.
*In the interest of improving and updating its equipment, Hach Company reserves the right to alter specifications to equipment at any time.*

Be Right™

onset®
HOBO® Data Loggers

# HOBO® Water Level Loggers

## Accurate, affordable water level monitoring

HOBO Water Level data loggers offer high accuracy at an affordable price, with no cumbersome vent tubes or desiccants to maintain. These data loggers are ideal for recording water levels and temperatures in wells, streams, lakes, and freshwater wetlands.

**Supported Measurements:** Water Level, Pressure, Temperature

**Key Advantages:**

- Available in 4 depth ranges
- No-vent-tube design for easy and reliable deployment
- Available in stainless steel and titanium* versions
- Durable ceramic pressure sensor for reliable performance
- Calibration certificate included

**Minimum System Requirements:**

Software | Base Station[1] | Coupler[2]

*Titanium version recommended for saltwater deployment.
[1]HOBO Base Station or HOBO Waterproof Shuttle required. See page 37 for more details.
[2]Coupler included with HOBO Base Station or HOBO Waterproof Shuttle.

For complete information and accessories, please visit: **www.onsetcomp.com**

| Part number | U20-001-04/ U20-001-04-Ti | U20-001-01/ U20-001-01-Ti | U20-001-02/ U20-001-02-Ti | U20-001-03/ U20-001-03-Ti |
|---|---|---|---|---|
| | **HOBO Water Level Specifications** | | | |
| **Range** | 0-4 m (0-13 ft)<br>0-145 kPa (0-21 psia) | 0-9 m (0-30 ft)<br>0-207 kPa (0-30 psia) | 0-30 m (0-100 ft)<br>0-400 kPa (0-58 psia) | 0-76 m (0-250 ft)<br>0-850 kPa (0-123 psia) |
| **Factory Calibrated Range (0° to 40°C; 32° to 104°F)** | 69 to 145 kPa<br>(10-21 psia) | 69 to 207 kPa<br>(10-30 psia) | 69 to 400 kPa<br>(10-58 psia) | 69 to 850 kPa<br>(10-123 psia) |
| **Water Level Accuracy (Typical Error)** | ± 0.3 cm (0.01 ft)<br>(± 0.075% FS) | ± 0.5 cm (0.015 ft)<br>(± 0.05% FS) | ± 1.5 cm (0.05 ft)<br>(± 0.05% FS) | ± 3.8 cm (0.125 ft)<br>(± 0.05% FS) |
| **Resolution** | 0.14 cm (0.005 ft) | 0.21 cm (0.007 ft) | 0.41 cm (0.013 ft) | 0.87 cm (0.028 ft) |
| **Burst Pressure** | 310 kPa (45 psia)<br>18 m (60 ft) depth | | 500 kPa (72.5 psia)<br>40.8 m (134 ft) depth | 1200 kPa (174 psia)<br>112 m (368 ft) depth |
| | **Temperature Specifications (all models)** | | | |
| **Range** | -20° to 50°C (-4° to 122°F) | | | |
| **Accuracy** | ± 0.37° @ 20°C (± 0.67° @ 68°F) ± 0.44° from 0° to 50°C (± 0.79° from 32° to 122°F) | | | |
| **Resolution (10 bit)** | 0.1° @ 20°C (0.18° @ 68°F) | | | |
| **Response time** | 3.5 minutes (to 90% in water) | | | |
| **Dimensions** | 2.46 cm diameter x 15 cm (0.97 x 5.9 in) hole in mounting bail 6.3 mm (0.25 in) | | | |
| **CE compliant** | Yes | | | |

## Contact Us


Sales (8am to 5pm ET, Monday through Friday)
- Email sales@onsetcomp.com
- Call 1-508-759-9500
- In U.S. toll free 1-800-564-4377
- Fax 1-508-759-9100

Technical Support (8am to 8pm ET, Monday through Friday)
- Contact Product Support onsetcomp.com/support/contact
- Call 1-508-759-9500
- In U.S. toll free 1-877-564-4377

Onset Computer Corporation
470 MacArthur Boulevard
Bourne, MA 02532



Copyright© 2015 Onset Computer Corporation. All rights reserved. Onset, HOBO, HOBOware are registered trademarks of Onset Computer Corporation. Other products and brand names may be trademarks or registered trademarks of their respective owners. Patented technology (U.S. Patent 6,826,664) MKT1098-0615

onset®
HOBO® Data Loggers

# HOBO® Conductivity Loggers

## Conductivity monitoring for freshwater and stable saltwater applications

HOBO Conductivity Loggers are convenient, rugged, and cost-effective data loggers for a variety of freshwater and saltwater monitoring applications.

The HOBO U24-001 model provides high-accuracy conductivity data in freshwater environments, for applications such as environmental impact monitoring, stormwater management, and water quality studies.

The HOBO U24-002-C model is for saltwater environments with relatively small changes in salinity (±5,000 µS/cm) such as saltwater bays, or to detect salinity events such as upwelling, rainstorm, and discharge events. This logger can also be used to gather salinity data for salinity compensation of HOBO U26 Dissolved Oxygen logger data. **Note:** This logger is not intended for monitoring salinity levels in waters with widely changing salinities as it can have significant measurement error and drift in those environments.

**Supported Measurements:** Conductivity, Salinity, Temperature

### Key Advantages:

- Non-contact capacitive sensor provides long life
- Easy access to sensor for cleaning and shedding air bubbles
- HOBOware Pro software provides compensation for fouling using calibration points from the start and end of each deployment
- Optical interface provides high-speed, reliable data offload in wet environments
- Compatible with HOBO Waterproof Shuttle for easy and reliable data retrieval

### Minimum System Requirements:

Software Base Station* Coupler[1]

*HOBO Base Station or HOBO Waterproof Shuttle required.
[1]Coupler included with HOBO Base Station or HOBO Waterproof Shuttle.

For complete information and accessories, please visit: **www.onsetcomp.com**

| **Part number** | **U24-001** Conductivity | **U24-002-C** Conductivity/Salinity |
|---|---|---|
| **Memory** | 18,500 temperature and conductivity measurements when using one conductivity range; 14,400 sets of measurements when using both conductivity ranges (64 kbytes) | |
| **Conductivity Calibrated Measurement Ranges** | Low Range: 0 to 1,000 µS/cm<br>Full Range: 0 to 10,000 µS/cm | Low Range: 100 to 10,000 µS/cm<br>High Range: 5,000 to 55,000 µS/cm |
| **Conductivity Calibrated Range – Temperature Range** | 5° to 35°C (41° to 95°F) | |
| **Specific Conductance Accuracy (in Calibrated Range using Conductivity Assistant and Calibration Measurements)** | Low Range: 3% of reading, or 5 µS/cm<br>Full Range: 3% of reading, or 20 µS/cm, whichever is greater | Low Range: 3% of reading or 50 µS/cm, whichever is greater<br>High Range: 5% of reading, in waters within a range of ±3,000 µS/cm; waters with greater variation can have substantially greater error |
| **Conductivity Resolution (typical)** | 1 µS/cm | 2 µS/cm |
| **Conductivity Drift** | Less than 3% sensor drift per year | Up to 12% sensor drift per month. Use monthly start & end-point calibration to compensate |
| **Temperature Accuracy (in Calibrated Range)** | 0.1°C (0.2°F) | |
| **Temperature Resolution** | 0.01°C (0.02°F) | |
| **Response Time** | 1 second to 90% of change (in water) | |
| **Measurement and Operating Range** | 0° to 36°C (32° to 97°F) -non-freezing | -2° to 36°C (28° to 97°F) -non-freezing |
| **Sample rate** | 1 second to 18 hrs, fixed or multiple-rate sampling with up to 8 user-defined sampling intervals | |
| **Time Accuracy** | ± 1 minute per month | |
| **Battery** | 3.6 Volt lithium battery, life: 3 years (at 1 minute logging), typical | |
| **Maximum Depth** | 70 m (225 ft) | |
| **Dimensions** | 3.18 cm diameter x 16.5 cm, with 6.3 mm mounting hole (1.25 in diameter x 6.5”, ¼ in hole) | |
| **CE compliant** | Yes | |

## Contact Us


Sales (8am to 5pm ET, Monday through Friday)
- Email sales@onsetcomp.com
- Call 1-508-759-9500
- In U.S. toll free 1-800-564-4377
- Fax 1-508-759-9100

Technical Support (8am to 8pm ET, Monday through Friday)
- Contact Product Support onsetcomp.com/support/contact
- Call 1-508-759-9500
- In U.S. toll free 1-877-564-4377

Onset Computer Corporation
470 MacArthur Boulevard
Bourne, MA 02532



Copyright© 2015 Onset Computer Corporation. All rights reserved. Onset, HOBO, HOBOware are registered trademarks of Onset Computer Corporation. Other products and brand names may be trademarks or registered trademarks of their respective owners. Patented technology (U.S. Patent 6,826,664) MKT1102-0615

YSI Environmental

WE KNOW D.O.

# YSI Pro2030 Dissolved Oxygen/Conductivity

## *Handheld DO, Conductivity, Salinity, TDS, Temperature*

Rugged and reliable, the YSI **Pro2030** provides everything you need in a handheld dissolved oxygen instrument with conductivity. ***Automatically compensates DO readings for changes in salinity***. User-replaceable DO sensors and cables, 50 data set memory, and simple DO calibration makes the Pro2030 user friendly. Rugged design and 1-meter drop tests ensure the instrument remains in your hands to provide years of sampling even in the harshest field conditions. Fast response times allow you to complete your sampling routine quickly, saving time and money.

- **3-year instrument; 2-year cable warranty**
- **User-replaceable cables and sensors. Choose either polarographic or galvanic DO. Conductivity sensor built into cable.**
- **Quick DO cal allows easy DO calibrations within seconds with the press of a button. Automatic internal barometric pressure compensation.**
- **Stores 50 data sets; no need to write down data**
- **Graphic, backlit display and glow in the dark keypad**
- **Tough. IP-67, impact-resistant, waterproof case even without the battery cover. Rubber over molded case provides extra durability. Military spec connectors.**
- **Quick response times; 95% DO response time in approximately 8 seconds with standard membrane (fastest response time in the market)**
- **Super-stable 4-electrode conductivity sensor is built for true field performance and designed for rugged conditions**

*Ideal replacement for the YSI Model 85!*

Pure Data for a Healthy Planet.®

*A rugged, cost-effective handheld designed for true field performance*

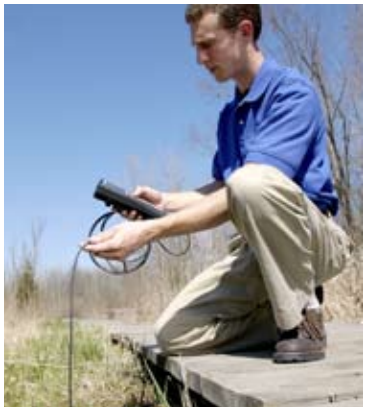

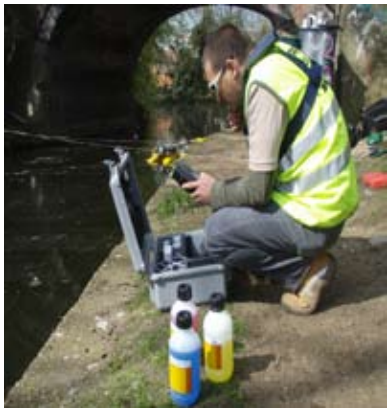

www.YSI.com/pro2030

+1 937 767 7241
800 897 4151 (US)
www.ysi.com
environmental@ysi.com

SonTek/YSI
+1 858 546 8327
inquiry@sontek.com

YSI Gulf Coast
+1 225 753 2650
environmental@ysi.com

AMJ Environmental
+1 877 392 9950
amj@ysi.com

YSI Hydrodata (UK)
+44 1462 673 581
europe@ysi.com
ireland@ysi.com

YSI Abu Dhabi Co. Ltd.
+971 2 56 31 316
samer@nanotech.co.jp

YSI Middle East (Bahrain)
+973 17536222
halsalem@ysi.com

YSI (Hong Kong) Limited
+852 2891 8154
hongkong@ysi.com

YSI (China) Limited
+86 532 575 3636
beijing@ysi-china.com

YSI Nanotech (Japan)
+81 44 222 0009
nanotech@ysi.com

YSI Australia
+61 7 390 17233
acorbett@ysi.com

YSI South Asia
+91 989 122 0639
sham@ysi.com

YSI Brazil
+55 48 9942 7840
psterling@ysi.com

ISO 9001
ISO 14001

Pure Data for a Healthy Planet, We Know DO and Who's Minding the Planet? are registered trademarks of YSI Incorporated.

©2010 YSI Incorporated
Printed in the USA 1010 W8-02

Specifications are subject to change. Please visit YSI.com to verify all specs.

YSI incorporated
Who's Minding the Planet?™

## Pro2030 *System* Specifications (instrument w/ cable and sensor)

| | | |
|---|---|---|
| Dissolved Oxygen (% saturation) | Sensor Type | Polarographic or Galvanic |
| | Range | 0 to 500% air saturation |
| | Accuracy | 0 to 200% air saturation, ±2% of the reading or ±2% air saturation, whichever is greater; 200 to 500% air saturation, ±6% of the reading |
| | Resolution | 0.1% or 1% air saturation (user selectable) |
| Dissolved Oxygen (mg/L) | Sensor Type | Polarographic or Galvanic |
| | Range | 0 to 50 mg/L |
| | Accuracy | 0 to 20 mg/L, ±2% of the reading or ±0.2 mg/L, whichever is greater; 20 to 50 mg/L, ±6% of the reading |
| | Resolution | 0.01 or 0.1 mg/L (user selectable) |
| Conductivity (mS, uS) | Sensor Type | Four-electrode cell |
| | Range | 0 to 200 mS/cm (auto range) |
| | Accuracy | 1-m or 4-m cable, ±1.0% of reading or 1.0 uS/cm, whichever greater; 10- 20- or 30-m cable, ±2.0% of reading or 1.0 uS/cm, whichever is greater |
| | Resolution | 0.0001 to 0.1 mS/cm (range dependent) |
| Salinity (ppt, PSU) | Range | 0 to 70 ppt |
| | Accuracy | ±1.0% of the reading or 0.1 ppt, whichever is greater |
| | Resolution | 0.1 ppt |
| Temperature (°C, °F) | Range | -5 to 55°C (0 to 45°C; DO compensation range for mg/L ) |
| | Accuracy | ±0.3°C |
| | Resolution | 0.1°C |
| Total Dissolved Solids (TDS) (mg/L, g/L) | Range | 0 to 100 g/L TDS constant range 0.30 to 1.00 (0.65 default) |
| | Accuracy | Dependent on temp and conductivity; calculated from those parameters |
| | Resolution | 0.0001, 0.01, 0.1 g/L |
| Barometer (mmHg, inHg, mbars, Psi, KPa) | Range | 500 to 800 mmHg |
| | Accuracy | ±5 mm Hg within ±15°C of calibration temperature |
| | Resolution | 0.1 mm Hg |

## Pro2030 Instrument Specifications

| | |
|---|---|
| Conductivity | ±0.5% of reading or 1.0 uS/cm, whichever greater |
| Size | 8.3 cm width x 21.6 cm length x 5.7 cm depth (3.25 in. x 8.5 in. x 2.25 in.) |
| Weight with batteries | 475 grams (1.05 lbs.) |
| Power | 2 alkaline C-cells providing 400 hours of battery life; low battery indicator on Pro2030 |
| Cables | 1- 4- 10- 20- and 30-m lengths (3.28, 13.1, 32.8, 65.6 ft.) |
| Warranty | 3-year instrument; 2-year cable; 1-year Polarographic sensors; 6-months Galvanic sensors |
| Salinity Input Range | 0-70 ppt; automatic based on conductivity |
| Conductivity Reference Temp | Adjustable; range 15°C to 25°C |
| Specific Conductance Temp Comp | 0 to 4% |
| Data Memory | 50 data sets |
| Languages | English, Spanish, German, French |
| Certifications | RoHS, CE, WEEE, IP-67, 1-meter drop test |

## Pro2030 Ordering Information (Order items separately*)

| | |
|---|---|
| 6052030 | Pro2030 Handheld instrument |
| 6052030-X | 1- 4- 10- 20- or 30-m cable for DO/Cond/temp (cable management kit included on all except 1-meter) |
| 605202 | Galvanic Sensor |
| 605203 | Polarographic Sensor |

## Accessories Ordering Information

| | |
|---|---|
| 603077 | Flow cell, 203 mL, with single port adapter |
| 603075 | Soft-sided carrying case |
| 603074 | Hard-sided carrying case |
| 603069 | Belt clip to attach instrument to belt |
| 063517 | Ultra clamp (attach to instrument to secure it to a desk, boat, etc) |
| 063507 | Small tripod (attach to instrument to sit on any flat surface) |
| 626444 | Lab Dock (instrument dock) |
| 603062 | Cable management kit (included with 4- 10- 20- and 30-m cables) |
| 605978 | Cable weight, 4.9 oz., attach to stainless steel probe guard |
| 5913** | 1.25 mil PE membranes for galvanic (6 yellow caps and solution) |
| 5908** | 1.25 mil PE membranes for polarographic (6 yellow caps and solution) |
| 5914 | 2 mil PE membranes for galvanic (6 blue caps and solution) |
| 5909 | 2 mil PE membranes for polarographic (6 blue caps and solution) |

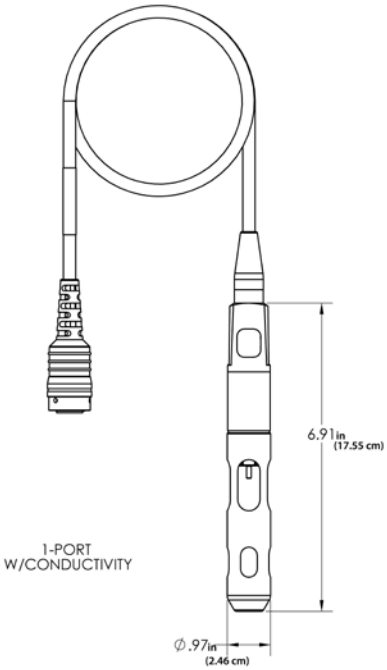


* Conductivity sensors are built into the cable and are included with all cables.

# APPENDIX D

# Standardized Forms

# Data Entry Review Worksheet

HERRERA ENVIRONMENTAL CONSULTANTS

Project Name/No./Client: _____ Page _____ of _____

Data entered by: _____ Data reviewed by: _____

Laboratories: _____ Date reviewed: _____

Event ID _____ Sample Date _____

Monitoring Stations: _____

Parameters: _____

_____

## Percentage of Data Reviewed:

| Data Source (i.e., Lab or Field) | Monitoring Station | Parameter | Incorrect Value | Correct Value | Corrective Action |
|---|---|---|---|---|---|
| | | | | | |
| | | | | | |
| | | | | | |
| | | | | | |
| | | | | | |
| | | | | | |
| | | | | | |
| | | | | | |
| | | | | | |
| | | | | | |
| | | | | | |
| | | | | | |
| | | | | | |
| | | | | | |
| | | | | | |
| | | | | | |
| | | | | | |
| | | | | | |

**Notes:**

# FIELD SAMPLING AND FLOW MONITORING LOG SHEET

**Field Personnel:**

**Sample Date:** **Time:**

**SITE ID:**

**EVENT ID:**

**Project Number:**

**Project Name:**

**Current Weather:**

**Flow Conditions:**

HERRERA ENVIRONMENTAL CONSULTANTS

## Water Quality Sampling

**Sample ID:**

| Parameter | Bottle Type | Bottle Volume | # Bottles | Preservation | Duplicated? |
|---|---|---|---|---|---|
| | | | | | |
| | | | | | |
| | | | | | |
| | | | | | |
| | | | | | |
| | | | | | |
| | | | | | |
| | | | | | |
| | | | | | |
| | | | | | |
| | | | | | |

**Visual Conditions:**

**Odor:**

LABORATORY DELIVERY

**Date:** **Time:**

**Sample Temperature ($^{o}$C):**

**COC signed?** YES NO

## Quality Assurance

**Checked By:** **Signature:**

**Date Checked:** **Time:**

**Data Entered into Database?** YES NO **initials:**

**Date Entered:** **Time:**

**Notes:**

## Flow Measurement

METER & CALIBRATION

**Meter Make:**

**Meter Model:** **S/N:**

**SWFR Propeller ID:**

**SWFR Blow Count:**

**MMB Zero Reading (cfs):**

**HEC Cal. Date:** **Time:**

**Factory Cal. Date:**

MEASUREMENT INFORMATION

**Start Date:** **Time:**

**Stop Date:** **Time:**

**Staff Gauge- Start (ft):**

**Staff Gauge- Stop (ft):**

**Continuous Gauge?** YES NO **ID:**

**Stream Width (ft):**

**Method:**

| | Distance from right bank (ft) | Depth (ft) | Velocity (ft/s) 2/10 | 6/10 | 8/10 |
|---|---|---|---|---|---|
| RB | | | | | |
| 1 | | | | | |
| 2 | | | | | |
| 3 | | | | | |
| 4 | | | | | |
| 5 | | | | | |
| 6 | | | | | |
| 7 | | | | | |
| 8 | | | | | |
| 9 | | | | | |
| 10 | | | | | |
| 11 | | | | | |
| 12 | | | | | |
| 13 | | | | | |
| 14 | | | | | |
| 15 | | | | | |
| 16 | | | | | |

Cross section sketch (not to scale)

**Calculated Stream Discharge (cfs):**

**Notes (equipment problems, blockages, unusual stream conditions, etc.):**

# Data Quality Assurance Worksheet

By _____

Project Name/No./Client: _____ Date _____ Page ____ of ____

Laboratory/Parameters: _____ Checked: initials _____

Sample Date/Sample ID: _____ date _____

| Parameter | Completeness/ Methodology | Pre-preservation Holding Times (hours) | | Total Holding Times (hours) | | Method Blanks Reporting Limit | Matrix Spikes/ Surrogate Recovery (%) | | Lab Control Samples Recovery (%) | | Lab Duplicates RPD (%) | | Field Duplicates RPD (%) | | Instrument Calibration/ Performance | ACTION |
|---|---|---|---|---|---|---|---|---|---|---|---|---|---|---|---|---|
| | | Reported | Goal | Reported | Goal | | Reported | Goal | Reported | Goal | Reported | Goal[1] | Reported | Goal[1] | | |
| Fecal Coliform | | | **≤12** | | **≤12** | 2 | | **NA** | | **NA** | | **≤ 35** | | **≤ 35** | | |
| | | | | | | | | | | | | | | | | |
| | | | | | | | | | | | | | | | | |
| | | | | | | | | | | | | | | | | |
| | | | | | | | | | | | | | | | | |
| | | | | | | | | | | | | | | | | |
| | | | | | | | | | | | | | | | | |

[1] If the sample or duplicate value is less than five times the reporting limit, the difference is calculated rather than the relative percent difference (RPD). The QA goal is a difference <2 times the detection limit instead of the number indicated in the goal column.
NA – not applicable or not available
NC – not calculable due to one or more values below the detection limit
NS – field duplicate not sampled.