89-e16

Segment No. 05-10-05

WA-10-1032

ENUMCLAW CLASS II INSPECTION REPORT
OCTOBER 4-5, 1988

by
Marc Heffner

Washington Department of Ecology
Environmental Investigations and Laboratory Services
Compliance Monitoring Section
Olympia, Washington 98504-6811

August 1989

TABLE OF CONTENTS

Title	Page
ABSTRACT	1
INTRODUCTION	1
SETTING	
Enumclaw STP	2
Nalley Pickle Facility	2
PROCEDURE	
Enumclaw STP	5
Nalley Pickle Facility	5
Receiving Water	5
RESULTS AND DISCUSSION	
Nalley Pickle Facility	8
Enumclaw STP	8
Enumclaw STP Laboratory Review	13
Receiving Water	13
RECOMMENDATIONS AND CONCLUSIONS	
Nalley Valley Facility	17
Enumclaw STP	20
Receiving Water	20
REFERENCES	21

FIGURES

Figure		Page
1	Encumclaw STP Flow Scheme	3
2	Nalley Flow Scheme	4
3	Receiving Water Flow	16

TABLES

Table		Page
1	Sampling Schedule and Parameters Analyzed	6
2	Sampling Schedule and Parameters Analyzed for Receiving Water Samples	7
3	Flow Measurements	9
4	Ecology Analytical Results	10
5	Comparison of 1986 and 1988 Pickle Facility	11
6	Inspection Results/NPDES Permit Comparison	12
7	Sludge Metals Data	14
8	Laboratory Comparison	15
9	Ecology Receiving Water Sampling Results	18
10	Receiving Water Dilution Ratio Calculations	19

APPENDIX

Appendix Page

Laboratory Procedure Review Sheet 22

ABSTRACT

A Class II inspection was conducted at the Enumclaw Sewage Treatment Plant (STP) on October 4-5, 1988. A limited receiving water study in the White River near the outfall was included as part of the inspection. Samples were also collected at the Nalley pickle facility. The Nalley discharge had fairly high BOD_5 and TSS concentrations, but loads to the Enumclaw STP were greatly reduced from those occurring during the 1986 Class II inspection. The Enumclaw STP was operating well with discharge characteristics within NPDES permit limits. The discharge hugged the right bank of the receiving water causing some concern.

INTRODUCTION

A Class II inspection was conducted at the Enumclaw Sewage Treatment Plant (STP) on October 4-5, 1988. A limited receiving water study in the White River near the outfall was included as part of the inspection. Samples were also collected at the Nalley pickle facility. The inspection was conducted by Norm Glenn and Marc Heffner of the Ecology Compliance Monitoring Section. Jim Crossler, the STP operator, provided assistance at the Enumclaw STP. Don Grover provided assistance at the Nalley plant.

A Class II inspection was conducted in 1986, but analytical difficulties at the Ecology laboratory limited data usage (Heffner, 1987). The 1988 inspection will provide more complete information.

Objectives of the survey included:

- Verify STP compliance with NPDES permit effluent limits.
- Analyze STP performance by determining plant loading and efficiency.
- Determine any short-term effects the Nalley brine discharge has on STP removal efficiencies.
- Review lab procedures at the STP to determine conformance with standard techniques. Also, split samples with the permittee to determine the accuracy of laboratory results.
- Estimate receiving water impacts near the discharge by conducting a limited receiving water study.

SETTING

Enumclaw STP

The Enumclaw STP is an RBC type secondary plant that was completed in 1980. The plant is designed to handle an average flow of 2.0 MGD. Treatment units include two primary clarifiers, two RBC basins, two secondary clarifiers, and chlorination facilities (Figure 1). During the inspection, one of the primary clarifiers was not being used. All other units were in use. The two RBC basins are each set up in four stages; the first stage consisting of three shafts and the next three stages consisting of one shaft each. The effluent is piped approximately 1.7 miles and discharged into the White River as permitted by NPDES Permit No. WA-002057-5(M). Sludge is anaerobically digested, then spread along with the digester supernatant on farmland (Heffner, 1987).

Nalley Pickle Facility

The Farman Brothers Pickle Plant was bought by Nalley approximately one year before the inspection. Significant portions of the operation, including fresh packing, have been discontinued at the Enumclaw facility under the new ownership. At the time of the inspection, tanks for soaking pickles in brine, washing facilities for after harvest cleanup, and warehouses for product storage were the portions of the plant intended for use at the Enumclaw site.

Wastewater generation at Nalley comes from three primary sources:

- A portion of the waste brine from the soaking tanks - Cucumbers soaked at the plant include genuine dill and salt stock. Each type represents approximately one-half of production. Genuine dills are sent in the brine soak to the Nalley Tacoma plant for processing, so no discharge to the Enumclaw STP is made. The salt stock pickles are rinsed prior to being sent to the Nalley Tacoma plant for processing. The salt concentration of the brine soak is reduced by approximately two-thirds using a series of flush and soak cycles (usually three) over a one to two day period. The rate at which prepared cucumbers will be sent to Tacoma had not been determined.

- Washwater used to prepare the cucumbers for further processing - This occurs during a four to six week period around September. The STP operator did not note any negative effects at the STP during the 1988 washing period.

- Site run-off, including stormwater and general yard clean-up water.

Plant drains carry water (including stormwater) to an on-site pretreatment system (Figure 2). The system includes a sump, an 8000 gallon surge tank into which the sump water is pumped, and an approximately 68,500 gallon aeration basin with one centrally located surface aerator (Heffner, 1987). Lime addition to the sump prior to the aeration basin is possible when necessary. Effluent from the aeration basin passes through a three-inch Parshall flume and is discharged into the city sewer system.

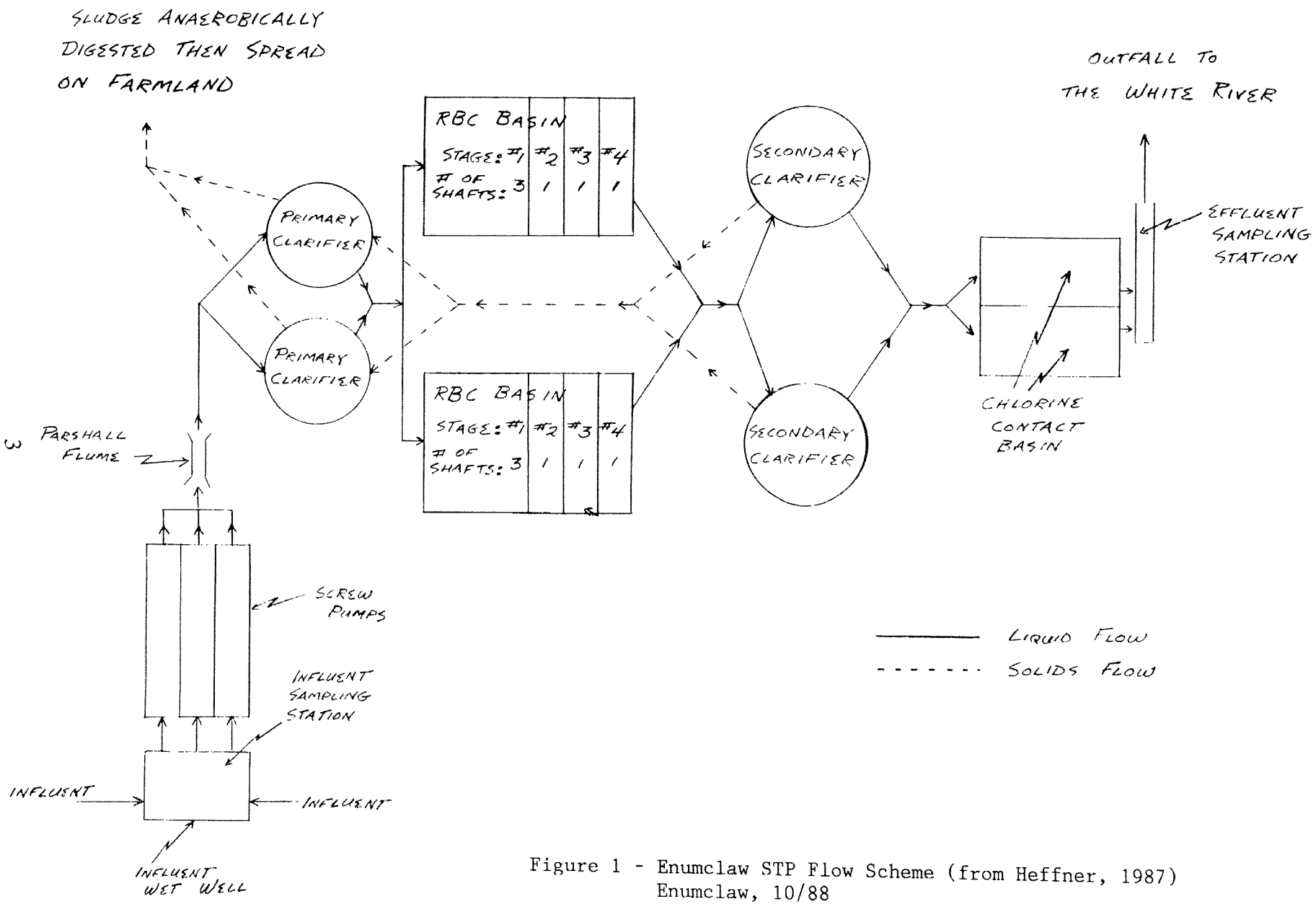

Figure 1 - Enumclaw STP Flow Scheme (from Heffner, 1987)
Enumclaw, 10/88

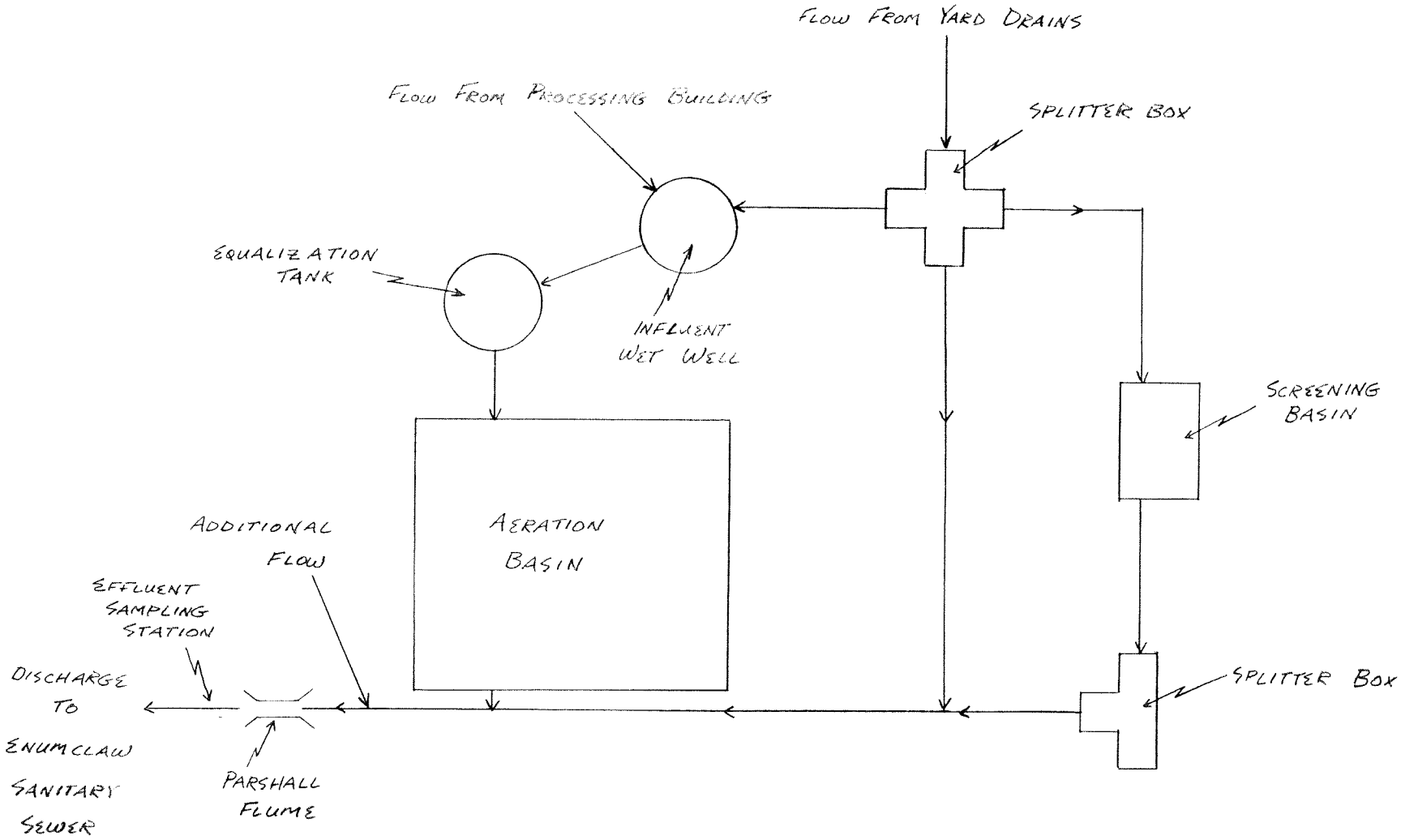

Figure 2 - Nalley Flow Scheme (from Heffner, 1987) - Enumclaw, 10/88

PROCEDURE

Enumclaw STP

Influent and effluent composite samples were collected by Enumclaw and Ecology at the STP. Ecology Isco composite samplers collected approximately 200 mLs of sample every 30 minutes from 1030 on October 4 to 1030 on October 5. Enumclaw samplers collected approximately 200 mLs of sample hourly from 1000 on October 4 to 1000 on October 5. Samples were cooled during collection and split for analysis by the Ecology and Enumclaw STP labs. Grab samples were also collected for analysis. Sampling times and parameters analyzed for both composite and grab samples are summarized in Table 1.

Plant flow is measured at an 18-inch Parshall flume near the headworks. An Ecology instantaneous measurement was made for comparison with the plant flow meter.

Nalley Pickle Facility

Because of the intermittent nature of the salt stock rinse water discharge, prior arrangements were made with Don Grover to assure discharge during the inspection. Rinse waters from two tanks rinsed the week before the inspection were stored in empty tanks. During the inspection the stored rinse water was released into the plant drainage system over a three hour period; from 1100-1400 hours on October 4. A total of approximately 20,000 gallons of rinse water was released. Because the rate at which prepared cucumbers will be sent to Tacoma has not been determined; the release rate during the inspection was selected to represent a possible alternative. The rate roughly equals six tanks being rinsed at the same time; two receiving the first rinse, two receiving the second rinse, and two receiving the final rinse.

Ecology sampling included grab samples and a composite sample. A composite sampler collected a sample every 20 minutes from 1130 to 1500 on October 4 in an effort to quantify the slug load going to the Enumclaw STP. Grab samples of the individual tanks were collected for field analysis. Samples collected and analyses run are summarized in Table 1.

Flow is measured at a three-inch Parshall flume in the effluent channel. Ecology instantaneous measurements were made for comparison with the plant flow meter.

Receiving Water

Grab samples were collected from the White River near the discharge. Samples were collected within ten feet of the north bank (right bank facing downstream). Four river stations were sampled; River #1 - 100 feet upstream of the discharge, River #2 - 30 feet downstream of the discharge, River #3 - 100 feet downstream of the discharge, and River #4 - 300 feet downstream of the discharge. Sampling times and parameters analyzed are summarized in Table 2.

Table 1. Sampling Schedule and Parameters Analyzed at the Enumclaw STP and Nalley Pickle Facility - Enumclaw, 10/88.

Sample:	Nalley Tank #1	Nalley Tank #2	Nalley Tank #3	Nalley Effluent		Enumclaw STP Influent					Enumclaw STP Effluent								Sludge
Sampler:	ECO	ECO	ECO	ECO	ECO	ECO	ECO	ECO	ECO	STP	ECO	ECO	ECO	STP	ECO	ECO	ECO	STP	ECO
Date:	10/4	10/4	10/4	10/4	10/4	10/4	10/4	10/5	10/4-5	10/4-5	10/4	10/4	10/5	10/5	10/5	10/5	10/4-5	10/4-5	10/4
Time:	1145	1205	1350	1200	1130-1500	1245	1500	1000	1030-1030	1000-1000	1240	1510	0430	0730	0930	1200	1030-1030	1000-1000	PM
Type:	Grab	Grab	Grab	Grab	Comp	Grab	Grab	Grab	Comp	Comp	Grab	Grab	Grab	Grab	Grab	Grab	Comp	Comp	Grab
Laboratory Analysis																			
Turbidity					E				E	E					E	E	E	E	
Conductivity					E	E	E	E	E	E	E	E			E	E	E	E	
Alkalinity					E				E	E							E	E	
NH3-N					E				E	E	E	E			E	E	E	E	
NO3+NO2-N					E				E	E	E	E			E	E	E	E	
Total-P					E				E	E	E	E			E	E	E	E	
Salinity					E	E	E	E	E	E	E	E			E	E	E	E	
TS					E				E	E							E	E	
TNVS					E				E	E							E	E	
TSS					E	E	E	E	E EN	E EN	E	E			E	E	E EN	E EN	
TNVSS					E				E	E							E	E	
COD					E	E	E	E	E	E EN	E	E			E	E	E	E EN	
BOD5					E				E EN	E EN							E EN	E EN	
Inhib. BOD5					E				E	E							E	E	
Fecal Coliform															E EN	E	E		
Metals (7)																			E
Chloride					E	E	E	E	E	E	E	E			E	E	E	E	
% Solids																			E
% Volatile Solids																			E
Field Analysis																			
pH	E	E	E	E	E	E	E	E			E	E			E	E			
Conductivity	E	E	E	E	E	E	E	E			E	E	E	E	E	E			
Temperature	E	E	E	E		E	E	E			E	E			E	E			
Chlorine residual																			
Total												E			E EN	E			
Free												E			E	E			

E - Ecology Laboratory Analysis
EN - Enumclaw STP Laboratory Analysis

Table 2. Sampling Schedule and Parameters Analyzed for Receiving Water Samples - Enumclaw, 10/88.

Sample:	River Sta.#1	STP Effluent	STP Discharge	River Sta.#2	River Sta.#3	River Sta.#4
Location:	100 ft Upstrm	*	**	30 ft Dwnstrm	100 ft Dwnstrm	300 ft Dwnstrm
Sampler:	ECO	ECO	ECO	ECO	ECO	ECO
Date:	10/5	10/5	10/5	10/5	10/5	10/5
Time:	1310	1200	1315	1305	1255	1245
Type:	Grab	Grab	Grab	Grab	Grab	Grab
Laboratory Analysis						
Turbidity	E	E		E	E	E
Conductivity	E	E		E	E	E
Alkalinity						
NH3-N	E	E		E	E	E
NO3+NO2-N	E	E		E	E	E
Total-P	E	E		E	E	E
Salinity	E	E		E	E	E
TS						
TNVS						
TSS	E	E		E	E	E
TNVSS						
COD	E	E		E	E	E
BOD5						
Inhib. BOD5						
Fecal Coliform	E	E		E	E	E
Metals (7)						
Chloride	E	E		E	E	E
% Solids						
% Volatile Solids						
Field Analysis						
pH	E	E	E	E	E	E
Conductivity	E	E	E	E	E	E
Temperature	E	E	E	E	E	E
Chlorine residual						
Total		E	E	E		
Free		E				

E - Ecology Laboratory Analysis
* - collected after discharge from the chlorine contact chamber
** - collected just before discharge into river

RESULTS AND DISCUSSION

Data collected at the Enumclaw STP and at Nalley are presented in Table 3 (Flow Measurements) and Table 4 (Ecology Analytical Results).

Nalley Pickle Facility

Flow data from Nalley are presented in Table 3. Ecology instantaneous measurements were made frequently as the held salt stock rinse water was being released (1120-1350 on October 4). The Ecology measurements were averaged and closely approximated the Nalley totalizer measurement for the same time period. Thus, the totalizer appeared to be working accurately during the inspection. The Nalley instantaneous meter is setup as a percent of maximum flow, but staff knowledge of the system is incomplete and the maximum flow multiplier was unknown. A file including maximum flow and a record of meter calibration is encouraged.

Total flow for the day was 22,000 gallons, approximately equal to the 20,000 gallons of salt stock rinse water released during the inspection. This agrees with Nalley staff reports that almost all the water being discharged was from the brine tanks.

Grab samples of salt stock rinse being discharged from the Nalley tanks had very high conductivities (Table 4). The conductivity of the Nalley effluent was lower than the salt stock rinse samples, but was still very high in relation to the STP influent. Although the laboratory and field conductivity results vary somewhat, the relative differences between samples provides a useful tracer of the Nalley discharge. Weak batteries in the field conductivity meter are thought to be the cause of differences in field and laboratory results. The Nalley discharge chloride concentration was also much higher than the STP influent concentration.

The Nalley discharge had fairly high BOD_5 (720 mg/L) and TSS (1000 mg/L) concentrations (Table 4). NH_3-N and Total-P concentrations were similar to the STP influent, while the Nalley $NO_2 + NO_3$ -N concentration (15 mg/L) was greater than in the STP influent (0.5-0.61 mg/L). The Nalley flow volume is relatively low in comparison to the STP flow, helping reduce impacts on the STP. Table 5 compares the loads from the pickle facility during the 1986 and 1988 Class II inspections (Heffner, 1987). The modified use of the pickle facility substantially reduced the observed load to the STP.

Enumclaw STP

Flow measurements at the Enumclaw STP are included in Table 3. The Ecology instantaneous flow measurement indicated the plant flow meter was operating accurately.

Ecology data collected at the STP are presented in Table 4. The plant was operating well, with good BOD_5 and TSS removal. Nitrification was almost complete. All effluent NH3-N measurements were less than 0.7 mg/L.

Table 6 compares the Ecology inspection data to the NPDES permit limits. BOD5 and TSS were well within all limits. One fecal coliform sample, which was over the monthly limit but within the weekly limit, was the only inspection sample not meeting all NPDES limits.

Table 3. Flow Measurements - Enumclaw, 10/88.

Enumclaw STP Flow Measurements

Date			Plant Meter		
Month	Day	Time	Instantaneous flow (MGD)	Totalizer reading	Flow for time increment (MGD)
10	4	1030	0.75	836442	
					0.86
10	4	1240	0.80	836520	
					0.84
10	4	1600	0.60	836637	
					0.55
10	5	930	1.00	837037	
					1.00
10	5	1045	1.10*	837089	

Average flow during inspection = 0.64 MGD

* - Ecology instantaneous measurement = 1.2 MGD

Nalley Flow Measurements

Date				Plant Meter		
Month	Day	Time	Ecology Instantaneous flow (MGD)	Instantaneous flow (%)	Totalizer reading	Flow for time increment (MGD)
10	4	1120	0.053	1%	149881	
						0.030
10	4	1140	0.066	3%	149923	
						0.062
10	4	1220	0.116	7%	150095	
						0.112
10	4	1350	0.121	9%	150794	
						0.039
10	4	1625	0.026	2%	151219	
						0.009
10	5	900	--	3%	151831	

Average flow during inspection = 0.022 MGD

Average flow from 1120 to 1350 on 10/4

Average of Ecology Instantaneous Measurements = 0.089 MGD

Using Plant Meter Totalizer = 0.088 MGD

Table 4. Ecology Analytical Results for Enumclaw STP and Nalley Samples - Enumclaw, 10/88.

Sample:	Nalley Tank #1	Nalley Tank #2	Nalley Tank #3	Nalley Effluent		Enumclaw STP Influent					Enumclaw STP Effluent							
Sampler:	ECO	ECO	ECO	ECO	ECO	ECO	ECO	ECO	ECO	STP	ECO	ECO	ECO	STP	ECO	ECO	ECO	STP
Date:	10/4	10/4	10/4	10/4	10/4	10/4	10/4	10/5	10/4-5	10/4-5	10/4	10/4	10/5	10/5	10/5	10/5	10/4-5	10/4-5
Time:	1145	1205	1350	1200	1130-1500	1245	1500	1000	1030-1030	1000-1000	1240	1510	0430	0730	0930	1200	1030-1030	1000-1000
Laboratory Analysis Type:	Grab	Grab	Grab	Grab	Comp	Grab	Grab	Grab	Comp	Comp	Grab	Grab	Grab	Grab	Grab	Grab	Comp	Comp
Turbidity (NTU)					165				97	185					3	3	2	4
Conductivity (umhos/cm)					14100	633	2230	711	1220	1080	514	509			878	975	562	538
Alkalinity (mg/L-CaCO3)					282 P				220	207							87	85
NH3-N (mg/L)					19.4J				18.7	18.1	0.32	0.31			0.55	0.31	0.64	0.61
NO3+NO2-N (mg/L)					15				0.5	0.61	13	15			14	13	15	13
Total-P (mg/L)					5.7				7.9	7.7	6.5	6.8			6.3	6.2	6.5	6.3
Salinity (ppt)					8	3.6U	3.6U	3.6U	3.6U	3.6 U	3.6 U	3.6 U			3.6 U	3.6 U	3.6 U	3.6 U
TS (mg/L)					11000				1000	960							520	480
TNVS (mg/L)					9600				650	550							190	270
TSS (mg/L)					1000	140	280	160	220	130	11	5			5	3	6	6
TNVSS (mg/L)					360				36	16							1	1
COD (mg/L)					1600	390	540	370	480	390	53	53			40	38	53	54
BOD5 (mg/L)					720				240	170							7	11
Inhib. BOD5 (mg/L)					590				160	130							5	7
Fecal Coliform (#/100mL)															230	100		
Chloride (mg/L)					5500	140	620	95	270	220	70	67			180	230	82	70
Field Analysis	**	**	**															
pH (S.U.)	3.7	3.7	3.9	7.2	6.8	7.5	7.1	7.5			6.9	6.3			6.8	7.0		
Conductivity (umhos/cm)	39500	73900	25400	14300	19400	900	2700	840			730	700	570	830	1040	1220		
Temperature (C)	15.9	16.0	16.1	14.5		19.6	19.7	18.8			19.8	19.8			18.5	19.1		
Chlorine residual (mg/L)																		
Total												0.4			0.3	0.6		
Free												0.1 U			0.1 U	0.1 U		

U - less than
P - greater than
J - estimated
** - Tanks 1 and 2 each contained approximately 8000 gallons of salt stock rinse water.
Tank 3 contained approximately 4000 gallons of salt stock rinse water.

Table 5. Comparison of 1986 and 1988 Pickle Facility Loads to the Enumclaw STP - Enumclaw, 10/88.

1986 Loading (Heffner, 1987)

	(MGD)	(lbs/D)	(lbs/D)
Total to STP	0.93	>2300	1940
From Pickle Facility	0.094	1100	330
% from Pickle Facility	10%	<48%	17%

1988 Loading

	Flow (MGD)	BOD5 (lbs/D)	TSS (lbs/D)
Total to STP	0.64	1280	1170
From Pickle Facility	0.022	132	183
% from Pickle Facility	3.4%	10%	16%

Table 6. Inspection Results/NPDES Permit Comparison - Enumclaw, 10/88.

Parameter	NPDES Permit Limits		Inspection Data *		
	Monthly Average	Weekly Average	Ecology Composite	STP Composite	Grab Samples
BOD5					
(mg/L)	30	45	7	11	
(lbs/D)	336	504	37	59	
(% removal)	85		97	94	
TSS					
(mg/L)	30	45	6	6	
(lbs/D)	344	515	32	32	
(% removal)	85		97	95	
Fecal coliform (#/100 mL)	200	400			230; 100
pH (S.U.)	not ouside range of 6.0 - 9.0				6.9; 6.3; 6.8; 7.0
Flow (MGD)	2.0 **		0.64	0.64	
Total Oils	no visible oils or grease				none seen

* Ecology Laboratory analysis
** - annual average

Grab sample conductivity data indicate the Nalley flow was affecting the STP influent when the October 4 - 1500 grab sample was collected. The conductivity increased from 900 umhos/cm at 1245 to 2700 umhos/cm at 1500. The influent COD and TSS also increased.

The STP effluent also showed effects of the Nalley discharge. Conductivity began increasing with the 0730 sample on October 5 and continued to increase as the 0930 and 1200 samples were collected. The COD and TSS data suggest that the Nalley discharge had little immediate effect on the quality of treatment by the STP. Effluent COD, TSS, $NO_2 + NO_3$-N, and Total-P concentrations remained relatively constant in the samples collected. The NH_3-N concentration increased slightly from 0.3 to 0.6 mg/L. It is unclear if the small increase was associated with natural plant variations or the Nalley flow. Monitoring effluent NH_3-N concentrations, if Nalley loads are expected to increase, may serve as an indicator of plant health.

Results of the digested sludge sample collected are presented in Table 7. Metals concentrations are similar to 1986 inspection results (Heffner, 1987). The Cd, Cr, Cu, Pb, Ni, and Zn concentrations fell within the range of concentrations found during previous Class II inspections at other RBC and trickling filter plants in Washington (Hallinan, 1988).

Enumclaw STP Laboratory Review

The plant recently had lab procedures thoroughly reviewed by Mary Jo Adams, Wastewater Instructor at Green River Community College. The Ecology laboratory review indicated that procedures were good at the STP. Minor recommendations made are circled on the lab review form included in the Appendix.

Table 8 compares Ecology and Enumclaw STP laboratory results of samples split for analysis. Most results compare closely. Both Ecology and STP laboratory results for BOD_5 and TSS analyses of the STP influent composite sample were lower than results of the Ecology influent composite sample. Inspection of the STP influent sampling site is recommended to assure a good sample is being collected. The fecal coliform split showed the labs differed by a factor of 10. An additional split during the next Ecology visit is suggested to help determine if there is a problem.

Receiving Water

River samples were collected to evaluate effects of the effluent plume on water quality near the shoreline. The outfall, which has no diffuser, discharges along the north (right) bank of the White River just downstream of the Highway 410 overpass. The White River is classified Class A in the area of the discharge. The river is approximately 120 feet wide and one to three feet deep near the bank. The White River Canal diversion to Lake Tapps is approximately one mile upstream of the discharge. USGS gauging stations and provisional flow measurements for October 5 are included in Figure 3.

Table 7. Sludge Metals Data - Enumclaw, 10/88.

Metal	8/86 STP** sample (mg/Kg dry wt)	10/88 STP sample (mg/Kg dry wt)	Data from previous inspections* Range (mg/Kg dry wt)	Geometric mean (mg/Kg dry wt)	Number of samples
Cd	4.4	7.3	0.01 - 16	5.5	17
Cr	56	33	0.4 - 313	41	17
Cu	1410	1420	28 - 3100	532	17
Pb	135	153	100 - 1140	284	17
Ni	31	23	12 - 46	29	15
Zn	1860	1450	680 - 2500	1620	17
Hg		5.9			
% solids	8.0	1.5			
% volatile		69			

* - summary of data collected during previous Class II inspections at trickling filter or RBC plants (Hallinan, 1988)

** - data collected during 8/86 Class II inspection (Heffner, 1987)

Table 8. Laboratory Comparison - Enumclaw, 10/88.

	Sample:	STP Influent				STP Effluent					
	Sampler:	ECO	ECO	STP	STP	ECO	STP	ECO	ECO	STP	STP
	Lab:	ECO	STP	ECO	STP	ECO	STP	ECO	STP	ECO	STP
	Date:	10/4-5	10/4-5	10/4-5	10/4-5	10/5	10/5	10/4-5	10/4-5	10/4-5	10/4-5
	Time:	1030-1030	1030-1030	1000-1000	1000-1000	0930	0930	1030-1030	1030-1030	1000-1000	1000-1000
Laboratory Analysis	Type:	Comp	Comp	Comp	Comp	Grab	Grab	Comp	Comp	Comp	Comp
TSS (mg/L)		220	244	130	158			6	10	6	9
COD (mg/L)		480		390	375			53		54	60
BOD5 (mg/L)		240	194	170	152			7	9	11	11
Fecal Coliform (#/100mL)						230	23				
Chlorine residual (mg/L)											
Total						0.3	0.3				

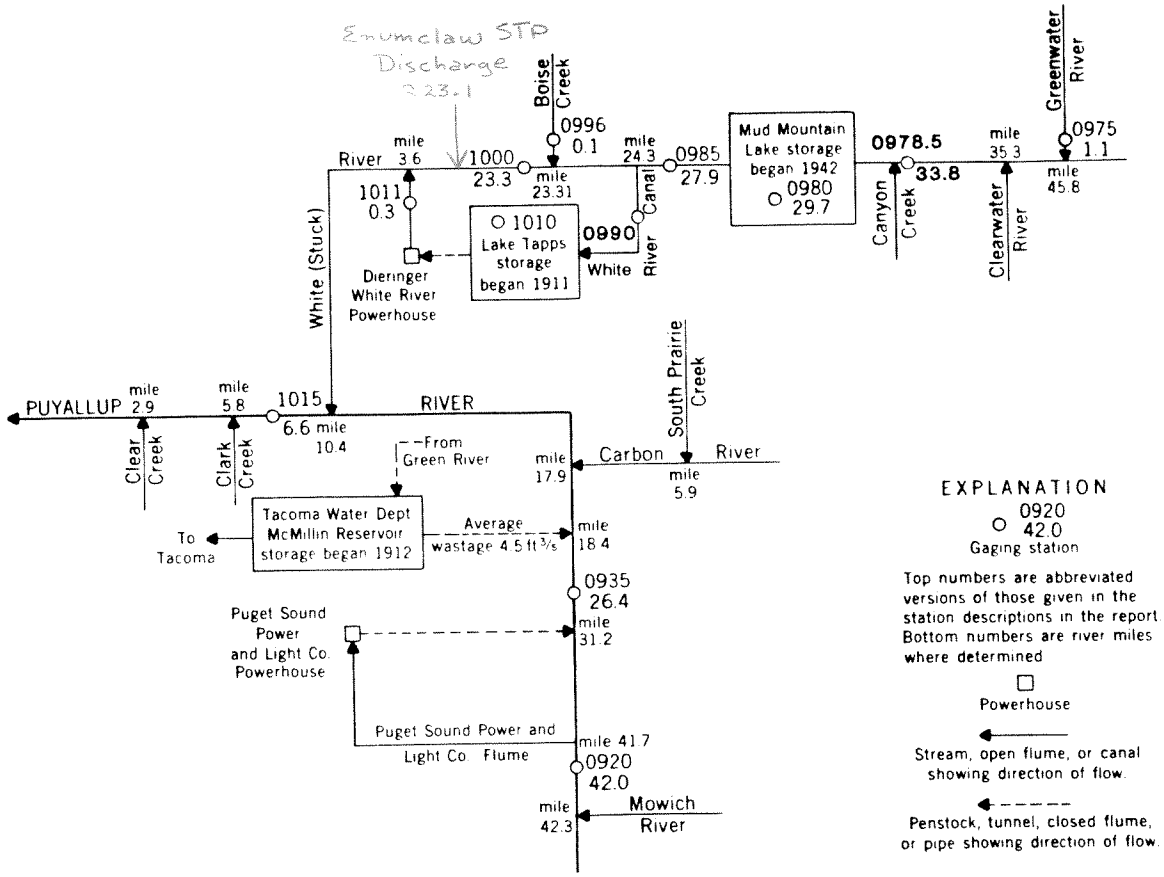

(Map from USGS, 1988)

Flow Rate on 10/5/88

Station	(cfs)	(MGD)
0985*	570	371
0990*	273	177
0996*	7.0	4.6
1000*	273	177
STP	1.0	0.64

* USGS Provisional Flow

Figure 3 - Receiving Water Flow - Enumclaw, 10/88

Results of the grab samples collected near the Enumclaw discharge are presented in Table 9. Visual observation of the discharge indicated the effluent plume hugged the right bank. Increases in conductivity and temperature, as well as $NO_2 + NO_3$-N, Total-P, and chloride concentrations in the grab samples confirmed the presence of effluent. The effluent had a lower turbidity and TSS concentration than the upstream river station.

The flow data indicate a dilution ratio of approximately 270:1 was available during the inspection; far greater than the 100:1 required by the Ecology Dilution Zone Criteria (Ecology, 1985). Table 10 estimates the dilution ratios, for individual parameters and an average, at the stations sampled. At the downstream border of the dilution zone, the dilution ratio was approximately 10:1. The dilution zone guidelines allow fifteen percent of the receiving water flow to be used in the dilution zone. Thus, a dilution ratio of 40:1 would be the maximum available at the inspection flows with which to meet the receiving water criteria. Comparison of the downstream border measurements with water quality criteria suggest that criteria were met even without complete use of the allowable dilution.

Problems meeting the dilution zone guidelines/receiving water criteria occurred in two areas (Ecology, 1985/Ecology, 1988):

1. The dilution zone guidelines specify the top one foot of water is outside the dilution zone. The shallow depth of the river makes compliance with this guideline difficult. Temperature measurements made near the water surface at river stations two and three were in excess of temperature criteria (Table 9).

2. The dilution zone is to be at least 15 percent of the river width away from the shoreline; or approximately 18 feet from shore in this case. Grab samples were collected within 10 feet of the shoreline. Thus, river stations two and three would be out of the allowable dilution zone and temperature criteria violated.

RECOMMENDATIONS AND CONCLUSIONS

Nalley Pickle Facility

Flow Measurement - The totalizer appeared to be measuring accurately during the inspection. Records including dates of flow meter calibration and the multiplier for the instantaneous flow meter should be maintained by Nalley.

Discharge - The discharge had fairly strong BOD_5 and TSS concentrations, but loads to the Enumclaw STP were greatly reduced from those occurring during the 1986 Class II inspection. Conductivity and chloride concentration were useful tracers of the Nalley flow.

Table 9. Ecology Receiving Water Sampling Results - Enumclaw, 10/88.

Sample:	River Sta.#1	STP Effluent	STP Discharge	River Sta.#2	River Sta.#3	River Sta.#4	
Location:	100 ft Upstrm	+	++	30 ft Dwnstrm	100 ft Dwnstrm	300 ft Dwnstrm	
Date:	10/5	10/5	10/5	10/5	10/5	10/5	
Time:	1310	1200	1315	1305	1255	1245	
Laboratory Analysis — Type:	Grab	Grab	Grab	Grab	Grab	Grab	Applicable State Water Quality Standards (Ecology, 1988)
Turbidity (NTU)	19	3		11	18	22	shall not exceed 5 NTU over background
Conductivity (umhos/cm)	69	975		493	208	168	
NH3-N (mg/L)	0.01U	0.31		0.03	0.01U	0.01U	
NO3+NO2-N (mg/L)	0.04	13		6.5	2.4	1.3	
Total-P (mg/L)	0.06	6.2		3.1	1.1	0.59	
TSS (mg/L)	16	3		17	18	16	
COD (mg/L)	4 U	38		36	25	7	
Fecal Coliform (#/100mL)	130	100		58	23	6	Geometric mean shall not exceed 100/100mL & not more than
Chloride (mg/L)	2.1	230		110	68	24	10% of samples exceed 200/100mL.
Salinity (ppt)	3.6 U	3.6 U		3.6U	3.6 U	3.6 U	
Field Analysis							
pH (S.U.)	6.8	7.0	7.0	6.9	6.9	6.9	Shall be within the range of 6.5 - 8.5
Conductivity (umhos/cm)	130	1220	1130	540	380	270	
Temperature (C)	12.9	19.1	18.8	15.8	14.5	13.5	Shall not exceed 1.4 degrees C over background *
Chlorine residual (mg/L)							
Total		0.6	0.1U	0.1U			
Free		0.1 U					

U - less than
\+ - collected after discharge from the chlorine contact chamber
++ - collected just before discharge into river
* - calculated using formula in standards (Ecology, 1988)

Table 10. Receiving Water Dilution Ratio Calculations - Enumclaw, 10/88

Parameter Used for Dilution Ratio Calculation	Sampling Station: River Sta.#2 (30 ft dwnstrm)	River Sta.#3 (100 ft dwnstrm)	River Sta.#4 (300 ft dwnstrm)
Laboratory Analysis			
Conductivity	2 : 1	7 : 1	9 : 1
NO3+NO2-N	2 : 1	5 : 1	10 : 1
Total-P	2 : 1	6 : 1	12 : 1
Chloride	2 : 1	3 : 1	10 : 1
Field Analysis			
Conductivity	2 : 1	4 : 1	7 : 1
Temperature	2 : 1	4 : 1	10 : 1
AVERAGE	2 : 1	5 : 1	10 : 1

Enumclaw STP

Flow Measurement - The flow meter appeared to be operating accurately.

Discharge - The plant was operating well and was nitrifying. The discharge was within NPDES permit limits. One fecal coliform sample exceeding the monthly average limit was the only measurement exceeding a limit.

Increased conductivity and chloride concentration indicated the Nalley flow was passing through the STP. Short-term degradation of effluent quality was not observed. Measurement of effluent NH_3-N concentrations may be a useful indicator of plant health if Nalley discharge becomes more frequent.

Lab procedures were generally good. Minor procedural suggestions are included in the lab procedure review sheet in the Appendix. A check of the influent sample site to assure it is representative, and a sample split for fecal coliform analysis by Ecology and the STP lab, are recommended during the next plant visit.

Receiving Water

Dilution available was more than adequate during the inspection. Mixing was inadequate to allow complete use of the flow allowable for mixing within the dilution zone. Nevertheless, receiving water standards were met at the downstream edge of the dilution zone. The shallow depth of the receiving water resulted in temperature standards being exceeded above the dilution zone. The discharge hugged the right bank. The proximity of the discharge plume to the shoreline was not in keeping with dilution zone guidelines.

REFERENCES

Ecology, 1985, Criteria for Sewage Works Design, DOE 78-5, revised October 1985.

Ecology, 1988, Chapter 173-201 WAC, Water Quality Standards for Surface Waters of the State of Washington, January 1, 1988.

Hallinan, P., 1988, Metals Concentrations Found During Ecology Inspections of Municipal Wastewater Treatment Plants, memo to John Bernhardt dated April 11, 1988.

Heffner, M., 1987, Enumclaw Sewage Treatment Plant/Farman Brothers Pickle Company Class II Inspection, August 19-20, 1986, memo to Gary Brugger dated February 24, 1987.

USGS, 1988, Water Resources Data - Washington - Water Year 1986, Report WA-86-1.

APPENDIX

Laboratory Procedure Review Sheet

Discharger: Enumclaw

Date: 10/4

Discharger representative: Bing

Ecology reviewer: Heffner

Instructions

Questionnaire for use reviewing laboratory procedures. Circled numbers indicate work is needed in that area to bring procedures into compliance with approved techniques. References are sited to help give guidance for making improvements. References sited include:

Ecology = Department of Ecology Laboratory User's Manual, December 8, 1986.

SM = APHA-AWWA-WPCF, Standard Methods for the Examination of Water and Wastewater, 16th ed., 1985.

SSM = WPCF, Simplified Laboratory Procedures for Wastewater Examination, 3rd ed., 1985.

Sample Collection Review

1. Are grab, hand composite, or automatic composite samples collected for influent and effluent BOD and TSS analysis?

2. If automatic compositor, what type of compositor is used? Manning
   The compositor should have pre and post purge cycles unless it is a flow through type. Check if you are unfamiliar with the type being used.

3. Are composite samples collected based on time or flow?

4. What is the usual day(s) of sample collection? Tuesday-Wednesday

5. What time does sample collection usually begin? ≈ 0800

6. How long does sample collection last? 24 hours

7. How often are subsamples that make up the composite collected? hourly

8. What volume is each subsample? 200 mL

9. What is the final volume of sample collected? 1½ gal

10. Is the composite cooled during collection? refrigerator

11. To what temperature? check - has thermometer
The sample should be maintained at approximately 4 degrees C (SM p41, #5b: SSM p2).

12. How is the sample cooled?
Mechanical refrigeration or ice are acceptable. Blue ice or similar products are often inadequate.

13. How often is the temperature measured? —
The temperature should be checked at least monthly to assure adequate cooling.

14. Are the sampling locations representative? OK

15. Are any return lines located upstream of the influent sampling location? supernatant is near - but seldom supernate
This should be avoided whenever possible.

16. How is the sample mixed prior to withdrawal of a subsample for analysis? OK
The sample should be thoroughly mixed.

17. How is the subsample stored prior to analysis? should warm to room temp
The sample should be refrigerated (4 degrees C) until about 1 hour before analysis, at which time it is allowed to warm to room temperature.

18. What is the cleaning frequency of the collection jugs? OK
The jugs should be thoroughly rinsed after each sample is complete and occasionally be washed with a non-phospate detergent.

19. How often are the sampler lines cleaned? OK
Rinsing lines with a chlorine solution every three months or more often where necessary is suggested.

pH Test Review

1. How is the pH measured? meter
A meter should be used. Use of paper or a colorimetric test is inadequate and those procedures are not listed in Standard Methods (SM p429).

2. How often is the meter calibrated? OK
The meter should be calibrated every day it is used.

3. What buffers are used for calibration? 4 & 7
Two buffers bracketing the pH of the sample being tested should be used.

If the meter can only be calibrated with one buffer, the buffer closest in pH to the sample should be used. A second buffer, which brackets the pH of the sample should be used as a check. If the meter cannot accurately determine the pH of the second buffer, the meter should be repaired.

BOD Test Review

1. What reference is used for the BOD test?
   Standard Methods or the Ecology handout should be used.

2. How often are BODs run? 2x's/wk
   The minimum frequency is specified in the permit.

3. How long after sample collection is the test begun? morning they come off
   The test should begin within 24 hours of composite sample completion (Ecology Lab Users Manual p42). Starting the test as soon after samples are complete is desirable.

4. Is distilled or deionized water used for preparing dilution water?

5. Is the distilled water made with a copper free still? Barnsted
   Copper stills can leave a copper residual in the water which can be toxic to the test (SSM p36).

6. Are any nitrification inhibitors used in the test? No What?
   2-chloro-6(trichloro methyl) pyridine or Hach Nitrification Inhibitor 2533 may be used only if carbonaceous BODs are being determined (SM p 527, #4g: SSM p 37).

7. Are the 4 nutrient buffers of powder pillows used to make dilution water?
   If the nutrients are used, how much buffer per liter of dilution water are added?
   1 mL per liter should be added (SM p527, #5a: SSM p37).

8. How often is the dilution water prepared? daily
   Dilution water should be made for each set of BODs run.

9. Is the dilution water aged prior to use? overnight
   Dilution water with nitrification inhibitor can be aged for a week before use (SM p528, #5b).
   → Dilution water without inhibitor should not be aged.

10. Have any of the samples been frozen? no
    If yes, are they seeded?
    Samples that have been frozen should be seeded (SSM p38).

11. Is the pH of all samples between 6.5 and 7.5? OK
    If no, is the sample pH adjusted?
    The sample pH should be adjusted to between 6.5 and 7.5 with 1N NaOH or 1N H_2SO_4 if 6.5 > pH >7.5 if caustic alkalinity or acidity is present (SM p529, #5e1: SSM p37).
    High pH from lagoons is usually not caustic. Place the sample in the dark to warm up, then check the pH to see if adjustment is necessary.

    If the sample pH is adjusted, is the sample seeded?
    The sample should be seeded to assure adequate microbial activity if the pH is adjusted (SM p528, #5d).

12. Have any of the samples been chlorinated or ozonated? final
If chlorinated are they checked for chlorine residual and dechlorinated as necessary?
How are they dechlorinated?
Samples should be dechlorinated with sodium sulfite (SM p529, #5e2: SSM p38), but dechlorination with sodium thiosulfate is common practice. Sodium thiosufate dechlorination is probably acceptable if the chlorine residual is < 1-2 mg/L.
If chlorinated or ozonated, is the sample seeded?
The sample should be seeded if it was disinfected (SM p528, #5d&5e2: SSM p38).

13. Do any samples have a toxic effect on the BOD test? no
Specific modifications are probably necessary (SM p528, #5d: SSM p37).

14. How are DO concentrations measured? YSI
If with a meter, how is the meter calibrated? air suggest
Air calibration is adequate. Use of a barometer to determine saturation is desirable, although not manditory. Checks using the Winkler method of samples found to have a low DO are desirable to assure that the meter is accurate over the range of measurements being made.

How frequently is the meter calibrated? before use
The meter should be calibrated before use.

15. Is a dilution water blank run? yes
A dilution water blank should always be run for quality assurance (SM p527, #5b: SSM p40, #3).

What is the usual initial DO of the blank? high 8's
The DO should be near saturation; 7.8 mg/L @ 4000 ft, 9.0 mg/L @ sea level (SM p528, #5b). The distilled or deionized water used to make the dilution water may be aged in the dark at ~20 degrees C for a week with a cotton plug in the opening prior to use if low DO or excess blank depletion is a problem

What is the usual 5 day blank depletion? ok
The depletion should be 0.2 mg/L or less. If the depletion is greater, the cause should be found (SM p527-8, #5b: SSM p41, #6).

16. How many dilutions are made for each sample? 1 - Plant samples 2 - Valley sample
At least two dilutions are recommended. The dilutions should be far enough apart to provide a good extended range (SM p530, #5f: SSM p41).

17. Are dilutions made by the liter method or in the bottle?
Either method is acceptable (SM p530, #5f).

18. How many bottles are made at each dilution? 3
How many bottles are incubated at each dilution? 2
When determining the DO using a meter only one bottle is necessary. The DO is measured, then the bottle is sealed and incubated (SM p530, #5f2).
When determining the DO using the Winkler method two bottles are necessary. The initial DO is found of one bottle and the other bottle is sealed and incubated (Ibid.).

19. Is the initial DO of each dilution measured? OK
What is the typical initial DO?
The initial DO of each dilution should be measured. It should approximate saturation (see #14).

20. What is considered the minimum acceptable DO depletion after 5 days? OK
What is the minimum DO that should be remaining after 5 days?
The depletion should be at least 2.0 mg/L and at least 1.0 mg/L should be left after 5 days (SM p531, #6: SSM p41).

21. Are any samples seeded? effluent
Which?
What is the seed source? 10 effluent
Primary effluent or settled raw wastewater is the preferred seed. Secondary treated sources can be used for inhibited tests (SM p528, #5d: SSM p41).

How much seed is added to each sample? 10-15 mL
Adequate seed should be used to cause a BOD uptake of 0.6 to 1.0 mg/L due to seed in the sample (SM p529, #5d).

How is the BOD of the seed determined? seed reagent
Dilutions should be set up to allow the BOD of the seed to be determined just as the BOD of a sample is determined. This is called the seed control (SM p529, #5d: SSM p41).

22. What is the incubator temperature?
The incubator should be kept at 20 +/- 1 degree C (SM p531, #5i: SSM p40, #3).

How is incubator temperature monitored? thermometer
A thermometer in a water bath should be kept in the incubator on the same shelf as the BODs are incubated.

How frequently is the temperature checked? daily
The temperature should be checked daily during the test. A temperature log on the incubator door is recommended.

How often must the incubator temperature be adjusted? seldom
Adjustment should be infrequent. If frequent adjustments (every 2 weeks or more often) are required the incubator should be repaired.

Is the incubator dark during the test period? OK
Assure the switch that turns off the interior light is functioning.

23. Are water seals maintained on the bottles during incubation? OK
Water seals should be maintained to prevent leakage of air during the incubation period (SM p531, #5i: SSM p40, #4).

24. Is the method of calculation correct? *OK*
Check to assure that no correction is made for any DO depletion in the blank and that the seed correction is made using seed control data.

Standard Method calculations are (SM p531, #6):

for unseeded samples;

$$BOD\ (mg/L) = \frac{D1 - D2}{P}$$

for seeded samples;

$$BOD\ (mg/L) = \frac{(D1 - D2) - (B1 - B2)f}{P}$$

Where: D1 = DO of the diluted sample before incubation (mg/L)
D2 = DO of diluted sample after incubation period (mg/L)
P = decimal volumetric fraction of sample used
B1 = DO of seed control before incubation (mg/L)
B2 = DO of seed control after incubation (mg/L)

$$f = \frac{\text{amount of seed in bottle D1 (mL)}}{\text{amount of seed in bottle B1 (mL)}}$$

Total Suspended Solids Test Review

Preparation

1. What reference is used for the TSS test? *Std Mthds*

2. What type of filter paper is used? *Using up GF/C - will go to approved paper*
   Std. Mthds. approved papers are: Whatman 934AH (Reeve Angel), Gelman A/E, and Millipore AP-40 (SM p95,footnote: SSM p23)

3. What is the drying oven temperature? *OK*
   The temperature should be 103-105 degrees C (SM p96, #3a: SSM p23).

4. Are any volatile suspended solids tests run? *OK*
   If yes--What is the muffle furnance temperature?
   The temperature should be 550+/- 50 degrees C (SM p98, #3: SSM p23).

5. What type of filtering apparatus is used?
   Gooch crucibles or a membrane filter apparatus should be used (SM p95, #2b: SSM p23).

6. How are the filters pre-washed prior to use? *OK*
   The filters should be rinsed 3 times with distilled water (SM p23, #2: SSM p23, #2).

   Are the rough or smooth sides of the filters up? *OK*
   The rough side should be up (SM p96, #3a: SSM p23, #1)

   How long are the filters dried? *overnight*
   The filters should be dried for at least one hour in the oven. An additional 20 minutes of drying in the furnance is required if volatile solids are to be tested (Ibid).

   How are the filters stored prior to use? *OK*
   The filters should be stored in a dessicator (Ibid).

7. How is the effectiveness of the dessicant checked? *recharge as necessary*
   All or a portion of the dessicant should have an indicator to assure effectiveness.

Test Procedure

8. In what is the test volume of sample measured?
   The sample should be measured with a wide tipped pipette or a graduated cylinder.

9. Is the filter seated with distilled water? *OK*
   The filter should be seated with distilled water prior to the test to avoid leakage along the filter sides (SM p97, #3c).

10. Is the entire measured volume always filtered? not always
The entire volume should always be filtered to allow the measuring vessel to be properly rinsed (SM p97, #3c: SSM p24, #4).

11. What are the average and minimum volumes filtered?

	Volume	
	Minimum	Average
Influent		
Effluent		

12. How long does it take to filter the samples? OK

	Time
Influent	
Effluent	

13. How long is filtering attempted before deciding that a filter is clogged? OK
Prolonged filtering can cause high results due to dissolved solids being caught in the filter (SM p96, #1b). We usually advise a five minute filtering maximum.

14. What do you do when a filter becomes clogged? doesn't happen because
The filter should be discarded and a smaller volume of sample should be used with a new filter.

15. How are the filter funnel and measuring device rinsed onto the filter following sample addition? OK
Rinse 3x's with approximately 10 mLs of distilled water each time (? ?).

16. How long is the sample dried? 1 hour
The sample should be dried at least one hour for the TSS test and 20 minutes for the volatile test (SM p97, #3c; p98, #3: SSM p24, #4). Excessive drying times (such as overnight) should be avoided.

17. Is the filter thoroughly cooled in a dessicator prior to weighing? OK
The filter must be cooled to avoid drafts due to thermal differences when weighing (SM p97, #3c: SSM p97 #3c).

18. How frequently is the drying cycle repeated to assure constant filter weight has ben reached (weight loss <0.5 mg or 4%, whichever is less: SM p97, #3c)? OK
We recommend that this be done at least once every 2 months.

19. Do calculations appear reasonable? OK
Standard Methods calculation (SM p97, #3c).

$$\text{mg/L TSS} = \frac{(A - B) \times 1000}{\text{sample volume (mL)}}$$

where: A= weight of filter + dried residue (mg)
B= weight of filter (mg)

Fecal Coliform Test Review

1. Is the Membrane Filtration (MF) or Most Probable Number (MPN) technique used?
   This review is for the MF technique.

2. Are sterile techniques used? OK

3. How is equipment sterilizated? OK
   Items should be either purchased sterilized or be sterilized. Steam sterilization, 121 degrees C for 15 to 30 minutes (15 psi); dry heat, 1-2 hours at 170 degrees C; or ultraviolet light for 2-3 minutes can be used. See Standard Methods for instruclions for specific items (SSM p67-68).

4. How is sterilization preserved prior to item use? OK
   Wrapping the items in kraft paper or foil before they are sterilized protects them from contamination (Ibid.).

5. How are the following items sterilized? OK

	Purchased Sterile	Sterilized at Plant
Collection bottles		
Phosphate buffer		
Media		
Media pads		
Petri dishes		
Filter apparatus		
Filters		
Pipettes		
Measuring cylinder		
Used petri dishes		

6. How are samples dechlorinated at the time of collection? OK
   Sodium thiosulfate (1 mL of 1% solution per 120 mLs (4 ounces) of sample to be collected) should be added to the collection bottle prior to sterilization (SM p856, #2: SSM p68, sampling).

7. Is phosphate buffer made specifically for this test? OK
   Use phosphate buffer made specifically for this test. The phosphate buffer for the BOD test should not be used for the coliform test (SM p855, #12: SSM p66).

8. What kind of media is used? OK
   M-FC media should be used (SM p896, SSM p66).

9. Is the media mixed or purchased in ampoules?
   Ampoules are less expensive and more convient for under 50 tests per day (SSM p65, bottom).

10. How is the media stored? OK
    The media should be refrigerated (SM p897, #1a: SSM p66, #5).

11. How long is the media stored? expires 7/89
Mixed media should be stored no longer than 96 hours (SM p897, #1a: SSM p66, #5). Ampoules will usually keep from 3-6 months -- read ampoule directions for specific instructions.

12. Is the work bench disinfected before and after testing? suggest
This is a necessary sanitazation procedure (SM p831, #1f).

13. Are forceps dipped in alcohol and flamed prior to use? OK
Dipping in alcohol and flaming are necessary to sterilize the forceps (SM p889, #1: SSM p73, #4).

14. Is sample bottle thoroughly shaken before the test volume is removed? OK
The sample should be mixed thoroughly (SSM p73, #5).

15. Are special procedures followed when less than 20 mLs of sample is to be filtered? OK
10-30 mLs of sterile phosphate buffer should be put on the filter. The sample should be put into the buffer water and swirled, then the vacuum should be turned on. More even organism distribution is attained using this technique (SM p890, #5a: SSM P73, #5).

16. Are special procedures followed when less than 1 mL of sample is to be filtered? ~~[illegible]~~ always greater volume used
Sample dilution is necessary prior to filtration when <1 mL is to be tested (SM p864, #2c: SSM p69).

17. Is the filter apparatus rinsed with phosphate buffer after sample filtration? OK
Three 20-30 mL rinses of the filter apparatus are recommended (SM p891, #5b: SSM p75, #7).

18. How soon after sample filtration is incubation begun? OK
Incubation should begin within 20-30 minutes (SM p897, #2d: SSM p77, #10 note).

19. What is the incubation temperature? OK
44.5 +/- 0.2 degrees C (SM p897, #2d: SSM p75, #9).

20. How long are the filters incubated? OK
24 +/- 2 hours (Ibid.).

21. How soon after incubation is complete are the plate counts made? OK
The counts should be made within 20 minutes after incubation is complete to avoid colony color fading (SSM p77, FC).

22. What color colonies are counted? blue
The fecal coliform colonies vary from light to dark blue (SM p897, #2e: SSM p78).

23. What magnification is used for counting? none
10-15 power magnification is recommended (SM p898, #2e: SSM p78).

24. How many colonies blue colonies are usually counted on a plate? ok
Valid plate counts are between 20 and 60 colonies (SM p897, #2a: SSM p78).

25. How many total colonies are usually on a plate? ok
The plate should have <200 total colonies to avoid inhabition due to crowding (SM p893, #6a: SSM p63, top).

26. When calculating results, how are plates with <20 or >60 colonies considered when plates exist with between 20 and 60 colonies? ok
In this case the plates with <20 or >60 colonies should not be used for calculations (SM p898, #3: SSM p78, C&R).

27. When calculating results how are results expressed if all plates have < 20 or > 60 colonies?
Results should be identified as estimated.
The exception is when water quality is good and <20 colonies grow. In this case the lower limit can be ignored (SM p893, #6a: SSM p78, C&R).

28. How are results calculated? ok
Standard Methods procedure is (SM p893, #6a: SSM p79):

$$\text{Fecal coliforms/100 mL} = \frac{\text{\# of fecal coliform colonies counted}}{\text{sample size (mL)}} \times 100$$