US Army Corps
of Engineers
Seattle District

Public Notice of Application for Permit

Regulatory Branch
Post Office Box 3755
Seattle, Washington 98124-3755
Telephone (206) 764-3495
ATTN: Kristine Sanders, Project Manager

Public Notice Date: December 30, 2004
Expiration Date: January 30, 2005
Reference: 200401114
Name: Friedman, Ken

Interested parties are hereby notified that an application has been received for a Department of the Army permit in accordance with Section 10 of the Rivers and Harbors Act of 1899, for certain work described below and shown on the enclosed drawings.

APPLICANT: Mr. Ken Freidman
7215 Navajo Trail Northeast
Bremerton, Washington 98311

AGENT: Marine Floats
Mr. Wendell Stroud
1208 East D Street
Tacoma, Washington 98421
Telephone: (253) 383-2740

LOCATION: In Port Orchard Bay, near Bremerton, Kitsap County, Washington.

WORK: To construct a 4 foot by 68 foot pier widening to 6 feet the last 11 feet with a 1 foot strip of grating running lengthwise down the center; install a 4 foot by 44 foot fully grated aluminum ramp, an 8 foot by 10 foot float with 2 foot wide grating running lengthwise down the center and an 8 foot by 30 foot "L-shaped" float with 50% grating coverage; and drive thirteen 10 inch epoxy coated steel piling. To prevent grounding 8 foot by 12-foot float stops will be attached to piling.

PURPOSE: To provide recreational access to the water.

ENDANGERED SPECIES: The Endangered Species Act (ESA) requires Federal agencies to consult with the National Marine Fisheries Service (NMFS) and/or U.S. Fish and Wildlife Service (USFWS) pursuant to Section 7 of ESA on all actions that may affect a species listed (or proposed for listing) under the ESA as threatened or endangered or any designated critical habitat. The Puget Sound chinook (*Oncorhynchus tshawytscha*), threatened; Coastal/Puget Sound bull trout (*Salvelinus confluentus*), threatened; bald eagle (*Haliaeetus leucocephalus*) threatened; marbled murrelet (*Brachyramphus marmoratus*), threatened; Steller sea lion (*Eumetopias jubatus*), threatened; humpback whale (*Megaptera novaeangliae*), endangered; and leatherback sea turtle (*Dermochelys coriacea*), endangered in the state of Washington, may occur in the proposed project area. For marbled murrelet critical habitat has been designated.

A preliminary determination indicates that the activity may affect but is not likely to adversely affect endangered or threatened species, or their critical habitat, designated under the Endangered Species Act of 1973. Informal consultation under Section 7 of the ESA has been initiated with the NMFS and the USFWS.

ESSENTIAL FISH HABITAT: The Magnuson-Stevens Fishery Conservation and Management Act, as amended by the Sustainable Fisheries Act of 1996, requires all Federal agencies to consult with the NMFS on all actions, or proposed actions, permitted, funded, or undertaken by the agency, that may adversely affect Essential Fish Habitat (EFH). The proposed action would impact approximately 730 square feet of EFH for Pacific salmon, groundfish, and coastal pelagic species in the project area.

The U.S. Army Corps of Engineers (Corps) has determined that the proposed action will not adversely affect designated EFH for federally managed fisheries in Washington waters. No further EFH consultation is necessary.

CULTURAL RESOURCES: The District Engineer has reviewed the latest published version of the National Register of Historic Places, lists of properties determined eligible and other sources of information. There are no recorded historic properties within the permit area. The proposed work is of such a limited nature and extent that little likelihood exists for the project to impinge upon an unrecorded historic property. The District Engineer invites responses to this public notice from Native American Nations or tribal governments; Federal, State, and local agencies; historical and archeological societies; and other parties likely to have knowledge of or concerns with historic properties in the area.

This public notice initiates consultation under Section 106 of the National Historic Preservation Act (36 CFR 800.4[a][3]), with any Tribe that has information or concerns with historic properties in the proposed permit area.

PUBLIC HEARING: Any person may request, in writing, within the comment period specified in this notice, that a public hearing be held to consider this application. Requests for public hearings shall state, with particularity, the reasons for holding a public hearing.

EVALUATION: The decision whether to issue a permit will be based on an evaluation of the probable impacts, including cumulative impacts, of the proposed activity on the public interest. That decision will reflect the national concern for both protection and utilization of important resources. The benefits, which reasonably may be expected to accrue from the proposal, must be balanced against its reasonably foreseeable detriments. All factors which may be relevant to the proposal will be considered, including the cumulative effects thereof; among those are conservation, economics, aesthetics, general environmental concerns, wetlands, historic properties, fish and wildlife values, flood hazards, floodplain values, land use, navigation, shoreline erosion and accretion, recreation, water supply and conservation, water quality, energy needs, safety, food and fiber production, mineral needs, considerations of property ownership, and, in general, the needs and welfare of the people.

The Corps is soliciting comments from the public; Native American Nations or tribal governments; Federal, State, and local agencies and officials; and other interested parties in order to consider and evaluate the impacts of this activity. Any comments received will be considered by the Corps to determine whether to issue, modify, condition or deny a permit for the work. To make this decision, comments are used to assess impacts on endangered species, historic properties, water quality, general environmental effects, and the other public interest factors listed above. Comments are used in the preparation of an Environmental Assessment and/or an Environmental Impact Statement pursuant to the National Environmental Policy Act. Comments are also used to determine the need for a public hearing and to determine the overall public interest of the activity.

ADDITIONAL EVALUATION: The State of Washington is reviewing this work for consistency with the approved Washington Coastal Zone Management Program.

This proposal is the subject of Shorelines Substantial Development Permit No. 04-17371, being processed by Kitsap County.

COMMENT AND REVIEW PERIOD: Conventional mail or email comments on this public notice will be accepted and made part of the record and will be considered in determining whether it would be in the public interest to authorize this proposal. In order to be accepted, email comments must originate from the author's email account and must include on the subject line of the email message the permit applicant's name and reference number as shown below. All email comments should be sent to Kristine.S.Sanders@usace.army.mil. Conventional mail comments should be sent U.S. Army Corps of Engineers, Regulatory Branch, Post Office Box 3755, Seattle, Washington 98124-3755. Both conventional mail or email comments must include the permit applicant's name and reference number, as shown below, and the commentor's name, address, and phone number. All comments whether conventional mail or email must reach this office, no later than the expiration date of this public notice to ensure consideration. Please include the following name and reference number:

Freidman, Ken, 200401114

Encl
Drawings (4)

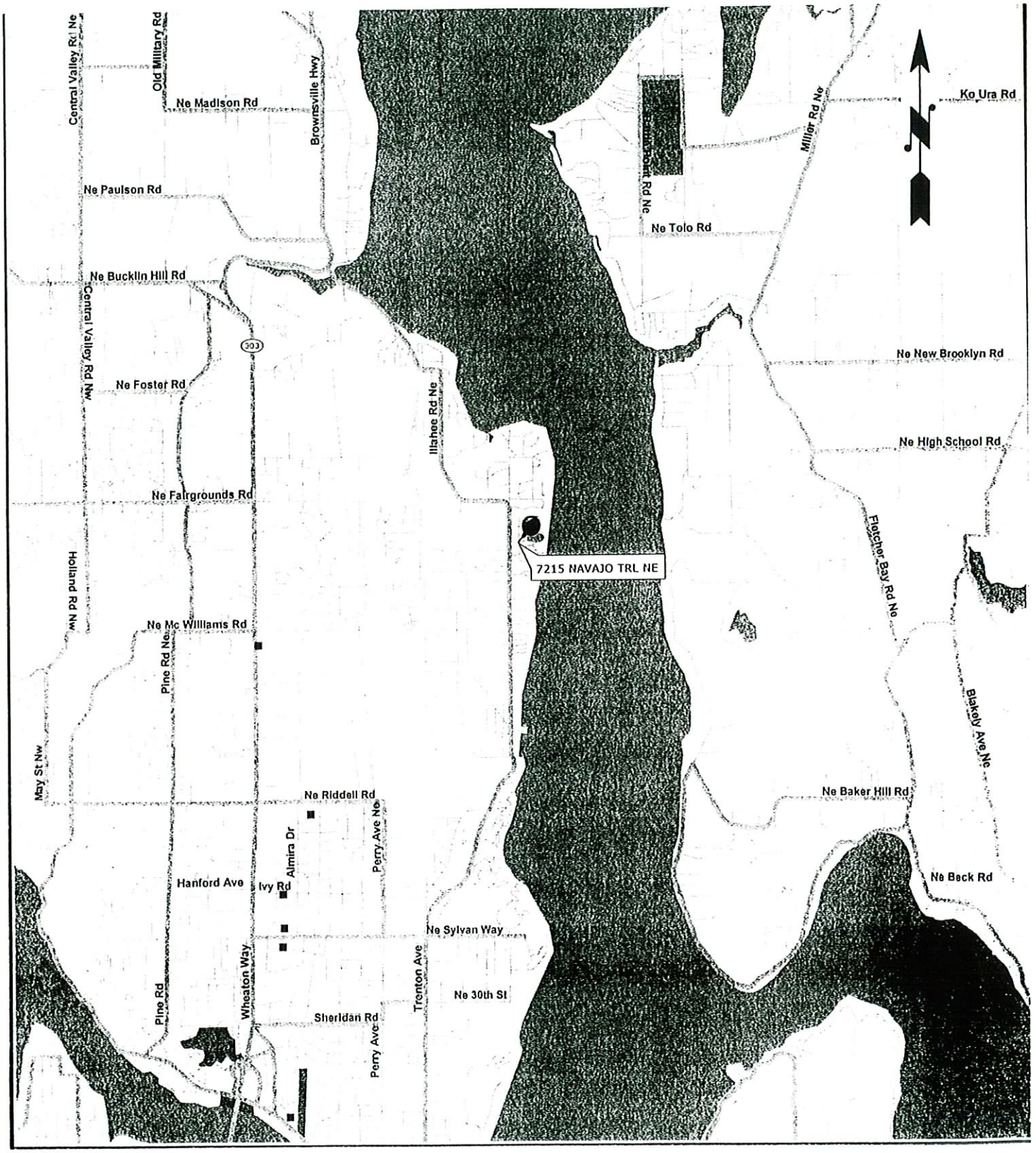

Sec SE30 T 25N R 2E Lat/Long 47° 37' 40" 122° 35' 40" Corps Reference # 200401114

Purpose: Private use recreational dock and Boat Moorage Datum: 0.0	MARINE FLOATS Tacoma WA (253) 383-2740	Proposed: To construct a 4'x68' pier, 4'x44' ramp 8'x10' ramp float, and 8'x30' ell float (13) steel pilin.
Adjacent Property Owners: (1) Cascade Evergreen PO Box 570, Silverdale, WA 98383 (2) Jim McConville 3601 Bella Vista Ave S, Seattle, WA 98144	Job Name: Ken Friedman Job Add: 7215 Navajo Trail NE Bremerton WA 98311 Mail Add: Same	In: Illahee At: Port Orchard County: Kitsap State: WA Appl by: Ken Friedman Date: 12/14/04 Page 1 of 4

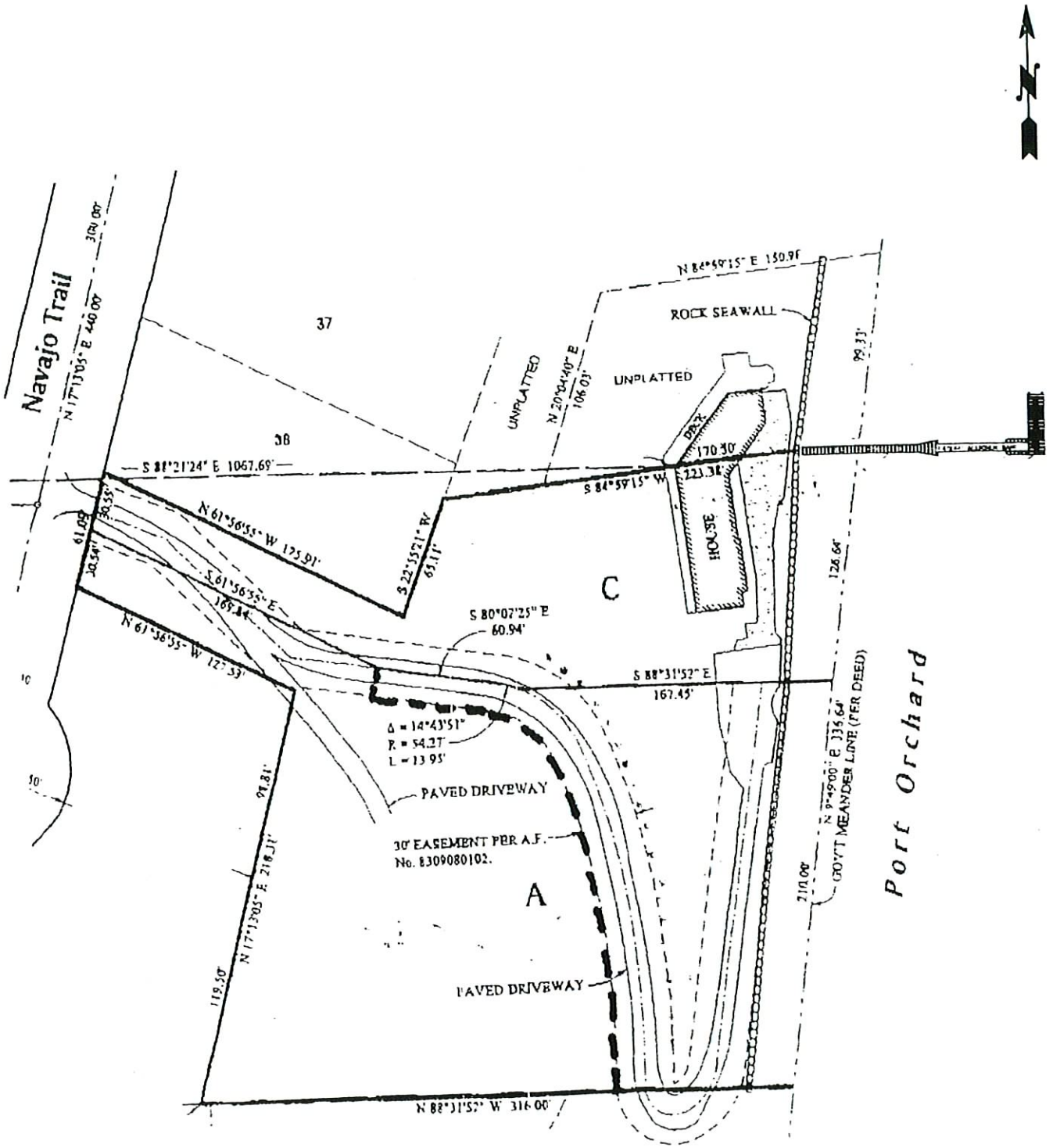

Sec SE30 T 25N R 2E Lat/Long 47° 37' 40" 122° 35' 40" Corps Reference # 200401114

Purpose: Private use recreational dock and Boat Moorage Datum: 0.0	MARINE FLOATS Tacoma WA (253) 383-2740	Proposed: To construct a 4'x68' pier, 4'x44' ramp 8'x10' ramp float, and 8'x30' ell float (13) steel piling
Adjacent Property Owners: (1) Cascade Evergreen PO Box 570, Silverdale, WA 98383 (2) Jim McConville 3601 Bella Vista Ave S, Seattle, WA 98144	Job Name: Ken Friedman Job Add: 7215 Navajo Trail NE Bremerton WA 98311 Mail Add: Same	In: Illahee At: Port Orchard County: Kitsap State: WA Appl by: Ken Friedman Date: 12/14/04

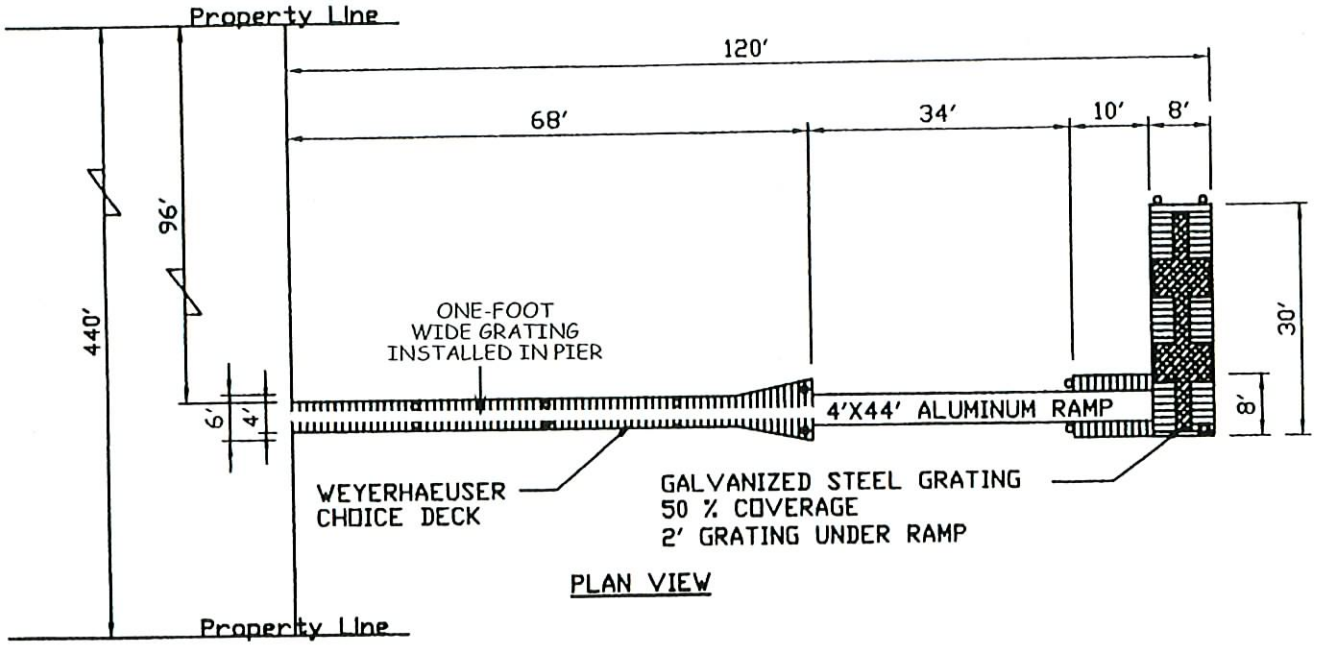

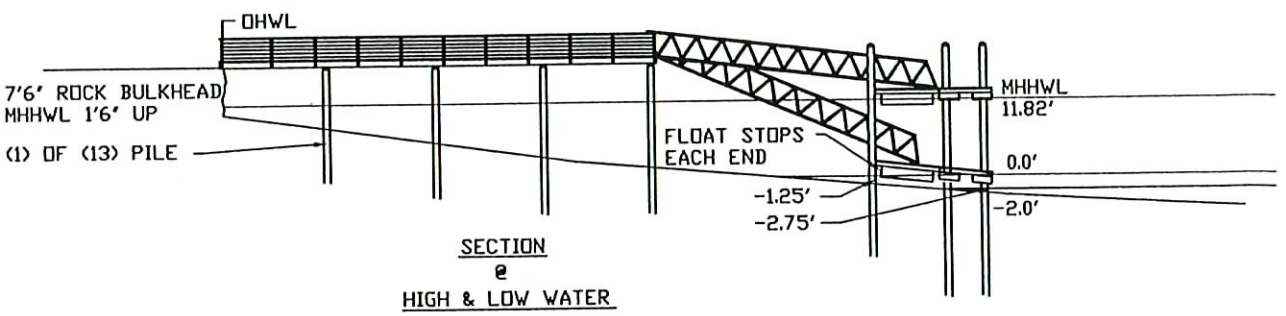

Scale: 1" = 30' Sec SE30 T 25N R 2E Lat/Long 47° 37' 40" 122° 35' 40" Corps Reference # 200401114

Purpose: Private use recreational dock and Boat Moorage Datum: 0.0	MARINE FLOATS Tacoma WA (253) 383-2740	Proposed: To construct a 4'x68' pier, 4'x44' ramp 8'x10' ramp float, and 8'x30' ell float (13) steel piling
Adjacent Property Owners: (1) Cascade Evergreen PO Box 570, Silverdale, WA 98383 (2) Jim McConville 3601 Bella Vista Ave S, Seattle, WA 98144	Job Name: Ken Friedman Job Add: 7215 Navajo Trail NE Bremerton WA 98311 Mail Add: Same	In: Illahee At: Port Orchard County: Kitsap State: WA Appl by: Ken Friedman Date: 12/14/04 Page 3 of 4

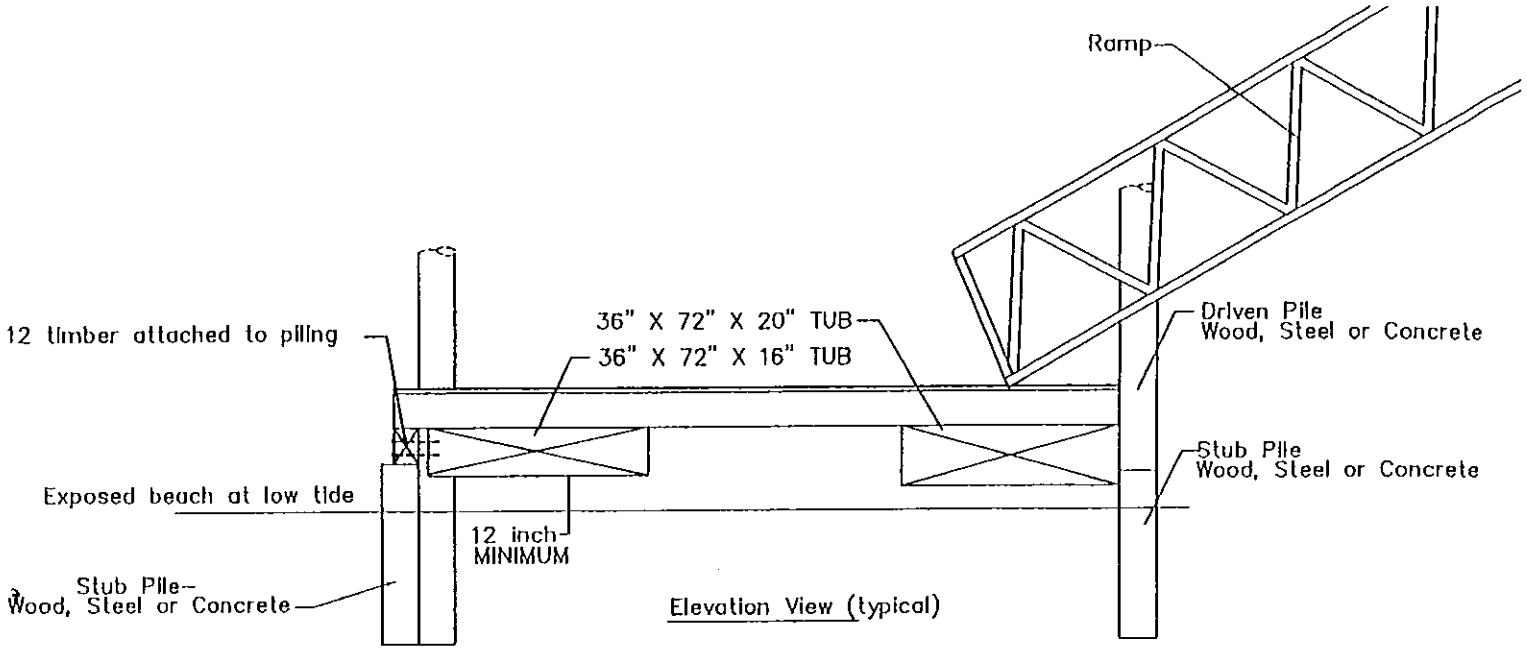

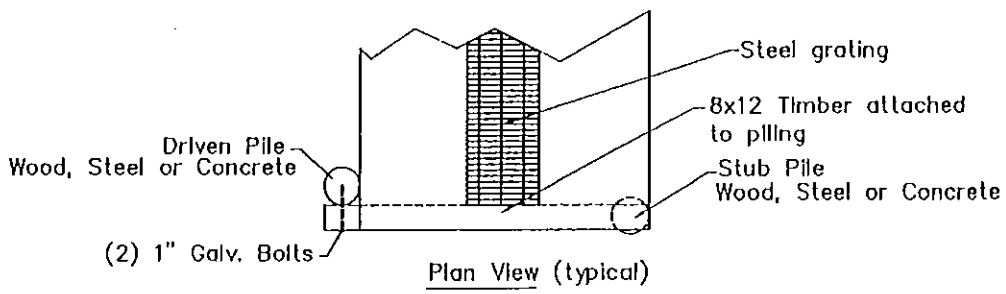

TYPICAL DETAILS OF FLOATS
WITH STUB PILE AND TIMBERS

Not to Scale

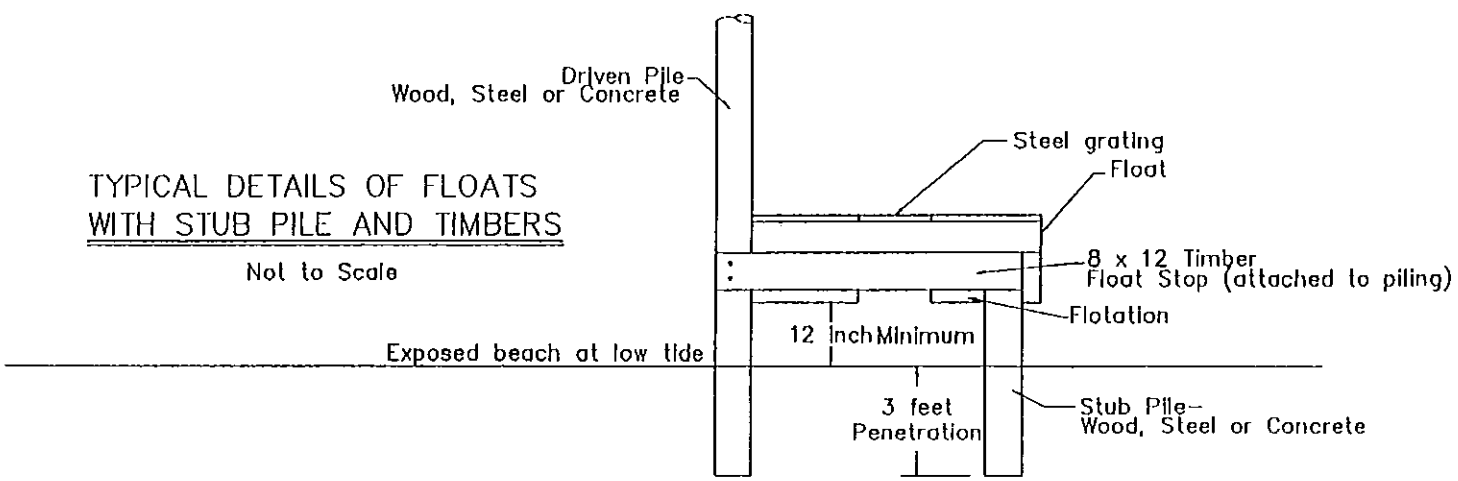

End View of Float Stop with Stub Piling (typical)

Scale: 1" = 30' Sec SE30 T 25N R 2E Lat/Long 47° 37' 40" 122° 35' 40" Corps Reference # 200401114

Purpose: Private use recreational dock and Boat Moorage Datum: 0.0	MARINE FLOATS Tacoma WA (253) 383-2740	Proposed: To construct a 4'x68' pier, 4'x44' ramp 8'x10' ramp float, and 8'x30' ell float (13) steel piling
Adjacent Property Owners: (1) Cascade Evergreen PO Box 570, Silverdale, WA 98383 (2) Jim McConville 3601 Bella Vista Ave S, Seattle, WA 98144	Job Name: Ken Friedman Job Add: 7215 Navajo Trail NE Bremerton WA 98311 Mail Add: Same	In: Illahee At: Port Orchard County: Kitsap State: WA Appl by: Ken Friedman Date: 12/14/04

STATE OF WASHINGTON

DEPARTMENT OF ECOLOGY

P.O. Box 47600 • Olympia, Washington 98504-7600
(360) 407-6000 • TDD Only (Hearing Impaired) (360) 407-6006

STATE OF WASHINGTON
DEPARTMENT OF ECOLOGY

Notice of Application for
Certification of Consistency with the
Washington Coastal Zone Management Program

Date: December 30, 2004

Notice is herby given that a request has been filed with the Department of Ecology, pursuant to the requirements of Section 307© of the federal Coastal Zone Management Act of 1972 (16 U.S.C. 1451), to certify that the project described in the U.S. Army Corps of Engineers Public Notice No. 200401114 will comply with the Washington State Coastal Zone Management Program and that the project will be conducted in a manner consistent with that Program.

Any person desiring to present views on the project pertaining to the project's compliance or consistency with the Washington State Coastal Zone Management Program may do so by providing written comments within 30 days of the above publication date to:

Federal Permit Coordinator
Department of Ecology
SEA Program
Post Office Box 47600
Olympia, Washington 98504-7600