US Army Corps
of Engineers
Seattle District

Public Notice of Application for Permit

Regulatory Branch
Post Office Box 3755
Seattle, Washington 98124-3755
Telephone (206) 764-3495
ATTN: Rozwin Liera, Project Manager

Public Notice Date: July 30, 2004
Expiration Date: August 30, 2004
Reference: 200300282
Name: Sacks, Larry and Linda

Interested parties are hereby notified that an application has been received for a Department of the Army permit in accordance with Section 10 of the Rivers and Harbors Act of March 3, 1899, for certain work described below and shown on the enclosed drawings.

APPLICANT - Sacks, Larry & Linda
24284 Bridle Trail Road
Hidden Hills, California 91302
Telephone: (818) 712-0210

AGENT - Permit Resources
292 Bobbyann Road
Eastsound, Washington 98245
ATTN: Mr. Jeff Otis
Telephone: (360) 376-3679

LOCATION – Deer Harbor, Orcas Island, San Juan County, Washington.

WORK – Construct a pier; install a ramp, float, and anchoring system; drive piling.

PURPOSE – Private, joint-use recreational moorage.

ADDITIONAL INFORMATION –The proposed joint-use pier will be shared by five adjacent properties. Additional overwater structures would be prohibited on these properties.

ENDANGERED SPECIES - The Endangered Species Act (ESA) of 1973, as amended, requires assessment of potential impacts to listed and proposed species. The Bald eagle (*Haliaeetus leucocephalus*) threatened; Marbled murrelet (*Brachyramphus marmoratus*), threatened; Coastal/Puget Sound bull trout (*Salvelinus confluentus*), threatened; Puget Sound chinook (*Oncorhynchus tshawytscha*), threatened; Hood Canal summer chum (*Oncorhynchus keta*), threatened; Steller sea lion (*Eumetopias jubatus*), threatened; Humpback Whale (*Megaptera novaeangliae*), endangered; Leatherback Sea Turtle (*Dermochelys coriacea*), endangered, in the state of Washington, may occur in the proposed project area. For the Steller sea lion and the Marbled murrelet critical habitat has been designated. A preliminary determination indicates that the activity will either have no effect on, or will not likely adversely affect the listed species, or their critical habitat, designated under the ESA of 1973.

ESSENTIAL FISH HABITAT - The Magnuson-Stevens Fishery Conservation and Management Act (MSA), as amended by the Sustainable Fisheries Act of 1996, requires all Federal agencies to consult with the National

Marine Fisheries Service (NMFS) on all actions, or proposed actions, permitted, funded, or undertaken by the agency, that may adversely affect Essential Fish Habitat (EFH). EFH for Pacific salmon, groundfish, coastal pelagic species occurs in the project area. The proposed action would impact, but not adversely affect, approximately 501 square feet of EFH for these species. No further EFH consultation is necessary.

CULTURAL RESOURCES - The District Engineer has reviewed the latest published version of the National Register of Historic Places, lists of properties determined eligible and other sources of information. The following is current knowledge of the presence or absence of historic properties and the effects of the undertaking upon these properties: Known historic properties occur in the vicinity of the proposed project. The proposed work is of such a limited nature and extent that little likelihood exists for the proposed project to impinge upon an undisturbed historic property.

The District Engineer invites responses to this public notice from Federal, Native American Nations or tribal governments, State, and local agencies, historical and archeological societies, and other parties likely to have knowledge of or concerns with historic properties in the area.

PUBLIC HEARING - Any person may request, in writing, within the comment period specified in this notice, that a public hearing be held to consider this application. Requests for public hearings shall state, with particularity, the reasons for holding a public hearing.

EVALUATION - The decision whether to issue a permit will be based on an evaluation of the probable impact, including cumulative impacts of the proposed activity on the public interest. That decision will reflect the national concern for both protection and utilization of important resources. The benefits which reasonably may be expected to accrue from the proposal must be balanced against its reasonably foreseeable detriments. All factors which may be relevant to the proposal will be considered, including the cumulative effects thereof; among those are conservation, economics, aesthetics, general environmental concerns, wetlands, historic properties, fish and wildlife values, flood hazards, floodplain values, land use, navigation, shoreline erosion and accretion, recreation, water supply and conservation, water quality, energy needs, safety, food and fiber production, mineral needs, considerations of property ownership, and, in general, the needs and welfare of the people.

The U.S. Army Corps of Engineers (Corps) is soliciting comments from the public; Federal, Native American Nations or tribal governments, State, and local agencies and officials; and other interested parties in order to consider and evaluate the impacts of this activity. Any comments received will be considered by the Corps to determine whether to issue, modify, condition or deny a permit for the work. To make this decision, comments are used to assess impacts on endangered species, historic properties, water quality, general environmental effects, and the other public interest factors listed above. Comments are used in the preparation of an Environmental Assessment and/or an Environmental Impact Statement pursuant to the National Environmental Policy Act. Comments are also used to determine the need for a public hearing and to determine the overall public interest of the activity.

ADDITIONAL EVALUATION - The State of Washington is reviewing this work for consistency with the approved Washington Coastal Zone Management Program.

This proposal is the subject of Shorelines Substantial Development Permit No. HE 05-03 (02SJ018) which has been issued by San Juan County.

COMMENT AND REVIEW PERIOD – Conventional mail or e-mail comments on this public notice will be accepted and made part of the record and will be considered in determining whether it would be in the public interest to authorize this proposal. In order to be accepted, e-mail comments must originate from the author's e-mail account and must include on the subject line of the e-mail message the permit applicant's name and

reference number as shown below. All e-mail comments should be sent to Rozwin.K.Liera@nws02.usace.army.mil. Conventional mail comments should be sent ATTN: Regulatory Branch. Both conventional mail or e-mail comments must include the permit applicant's name and reference number, as shown below, and the commentor's name, address, and phone number. All comments whether conventional mail or e-mail must reach this office, no later than the expiration date of this public notice to ensure consideration. Please include the following name and reference number:

Sacks, Larry and Linda,
200300282

Encl
Drawings (7)

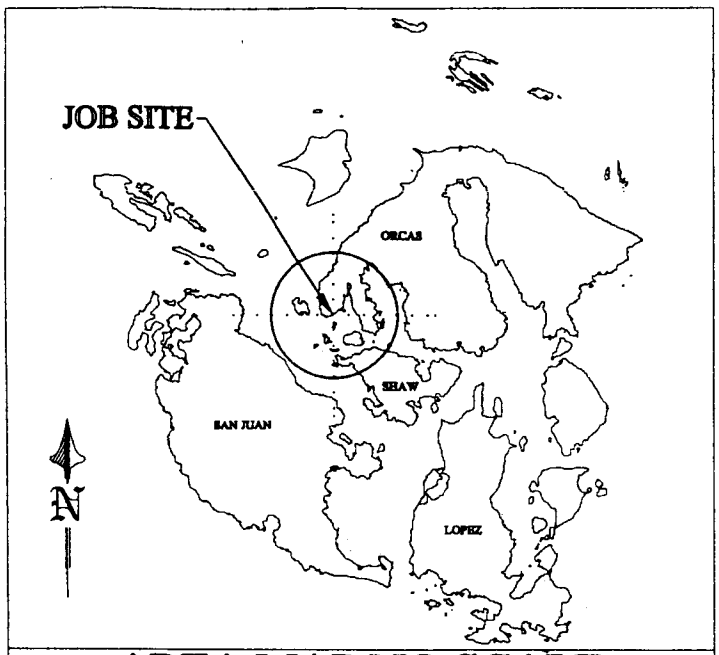

AREA MAP NO SCALE

LAT: 48°-36'-58"
LONG: 123°-00'-32"

LEGAL DESCRIPTION

TAXLOT #: 260733 004000

LOTS 1, 2 AND "COMMON AREA", A SHORT PLAT OF DEER HARBOR POINT, ACCORDING TO THE PLAT THEREOF, RECORDED IN VOLUME 6 OF SHORT PLATS, AT PAGES 75 AND 75A IN THE OFFICE OF THE AUDITOR OF SAN JUAN COUNTY, WASHINGTON, BEING A PORTION OF GOVERNMENT LOT 4, SECTION 7, TOWNSHIP 36 NORTH, RANGE 2 WEST AND GOVERNMENT LOT 1, SECTION 18, TOWNSHIP 36 NORTH, RANGE 2 WEST OF W.M.

TOGETHER WITH THAT CERTAIN 60 FOOT EASEMENT AS DESCRIBED UNDER AUDITOR'S FILE NO. 80368, RECORDS OF SAN JUAN COUNTY, WASHINGTON.

SUBJECT TO AND TOGETHER WITH AN EASEMENT FOR ROADWAY AND UTILITIES PURPOSED OVER, ACROSS AND UNDER A 60 FOOT WIDE STRIP OF LAND IN GOVERNMENT LOT 4, SECTION 7, TOWNSHIP 36 NORTH, RANGE 2 WEST OF W.M., THE CENTERLINE OF SAID EASEMENT IS DESCRIBED AS FOLLOWS:

BEGINNING AT A POINT ON THE NORTH BOUNDARY OF SAID GOVERNMENT LOT 4 THAT BEARS EASTERLY 30 FEET FROM THE NORTHWEST CORNER OF SAID GOVERNMENT LOT 4; THENCE PARALLEL WITH THE WEST BOUNDARY SOUTH 0°06'09" EAST, 392.28 FEET; THENCE SOUTH 36°25'06" EAST, 83.02 FEET; THENCE SOUTH 0°10'05" WEST, 249.48 FEET; THENCE SOUTH 7°05'39" WEST, 149.49 FEET; THENCE SOUTH 35°00' WEST, 50.89 FEET TO A POINT THAT IS 30 FEET EAST OF SAID WEST BOUNDARY; THENCE PARALLEL WITH SAID WEST BOUNDARY SOUTH 00°06'09" EAST, 250.0 FEET.

SITUATE IN SAN JUAN COUNTY, WASHINGTON.

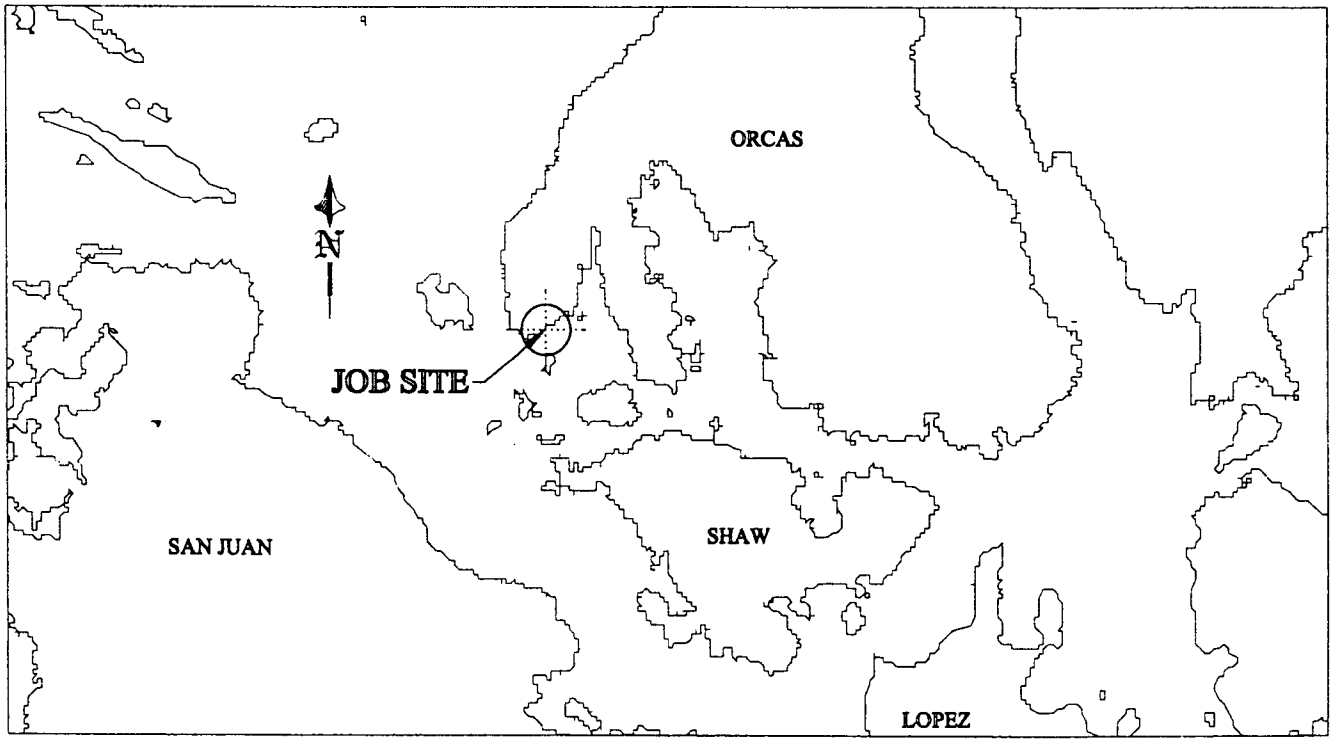

VICINITY MAP NO SCALE

200300782

REVISED 5-14-03

ADJACENT OWNERS:
① Heagney, Joseph/Joanne
② Tegtmeyer, Peter/Patricia

PROPOSED: CONSTRUCT NEW JOINT USE BOAT MOORAGE FOR SACKS, SARVER, AND BIANCHI.

PURPOSE: PROVIDE JOINT USE BOAT MOORAGE FOR SACKS, SARVER, AND BIANCHI.

DWG#: 02-3215-A.1-1

APPLICANT: LARRY & LINDA SACKS
SITE ADD. 66 TIFT LANE
ORCAS ISLAND, WA. 98245
MAIL ADD. 24284 BRIDLE TRAIL ROAD
HIDDEN HILLS, CA. 91302
DATUM: C.O.E. 0.0' EST. 1919
PAGE: 1 OF: 7 DATE: 10-15-02

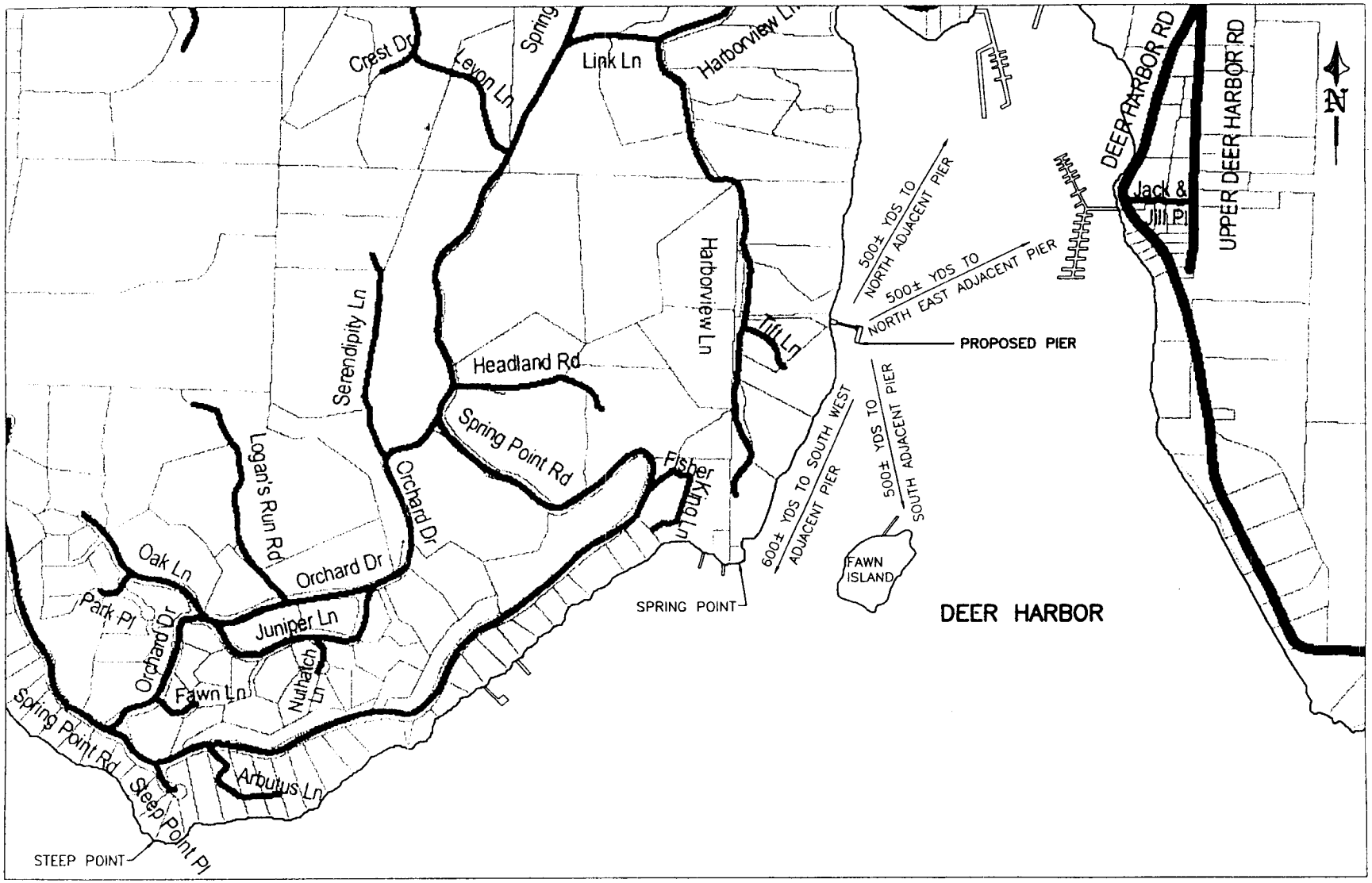

VICINITY MAP

NO SCALE

REVISED 5-14-03

200300782

PROPOSED:CONSTRUCT NEW JOINT USE BOAT MOORAGE FOR SACKS, SARVER, AND BIANCHI.	
IN:DEER HARBOR	
AT:SAN JUAN COUNTY	APPLICATION#:
APPLICANT:LARRY & LINDA SACKS 66 TIFT LANE ORCAS ISLAND, WA. 98245	
PAGE:2 OF:7	
DATE:10-15-02	DWG#:02-3215-A.1-1

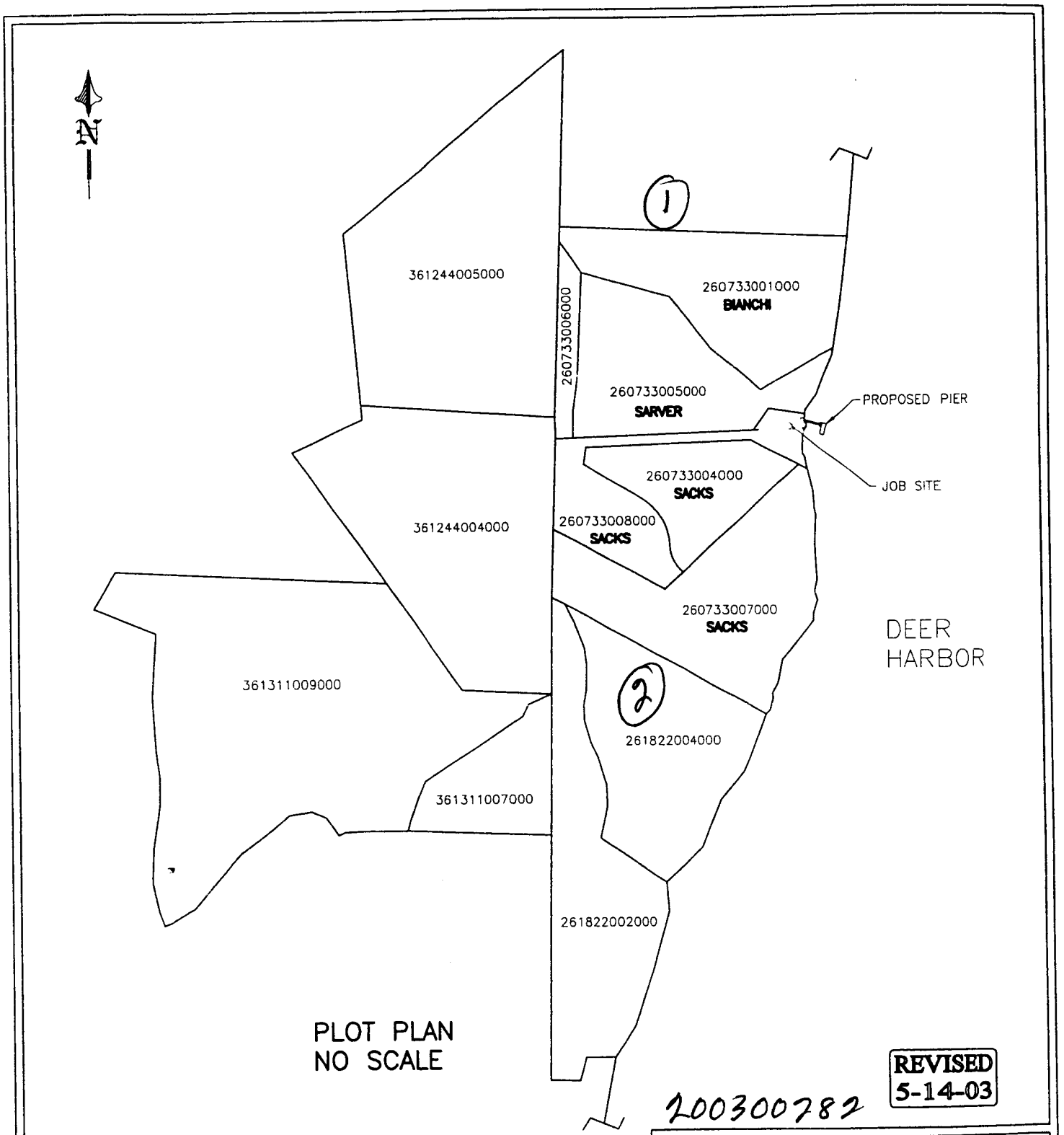

PLOT PLAN
NO SCALE

REVISED
5-14-03

200300782

NOTE:
CONSTRUCT A NEW PIER, RAMP, AND FLOATS THAT WILL BE USED FOR JOINT USE BOAT MOORAGE FOR SACKS, SARVER, AND BIANCHI. THE FACILITY WILL CONSIST OF AN 8'x12' PIER, WITH A 3'-4"x40' RAMP, WITH A 4'x8' LANDING FLOAT, AND AN 8'x30' MOORAGE FLOAT. THE FLOAT WOULD BE ANCHORED WITH UP TO (2) MOORING PILES AND (3) ANCHORS FOR FLOAT STABILITY. THE COMBINED FIXED PILE PIER, RAMP, AND FLOAT WILL EXTEND APPROXIMATELY 45'± WATERWARD FROM THE MEAN HIGHER HIGH WATER (MHHW) LINE.

PROPOSED: CONSTRUCT NEW JOINT USE BOAT MOORAGE FOR SACKS, SARVER, AND BIANCHI.	
IN: DEER HARBOR	
AT: SAN JUAN COUNTY	APPLICATION#:
APPLICANT: LARRY & LINDA SACKS 66 TIFT LANE ORCAS ISLAND, WA. 98245	
PAGE: 3 OF: 7	
DATE: 10-15-02	DWG#: 02-3215-A.3-1

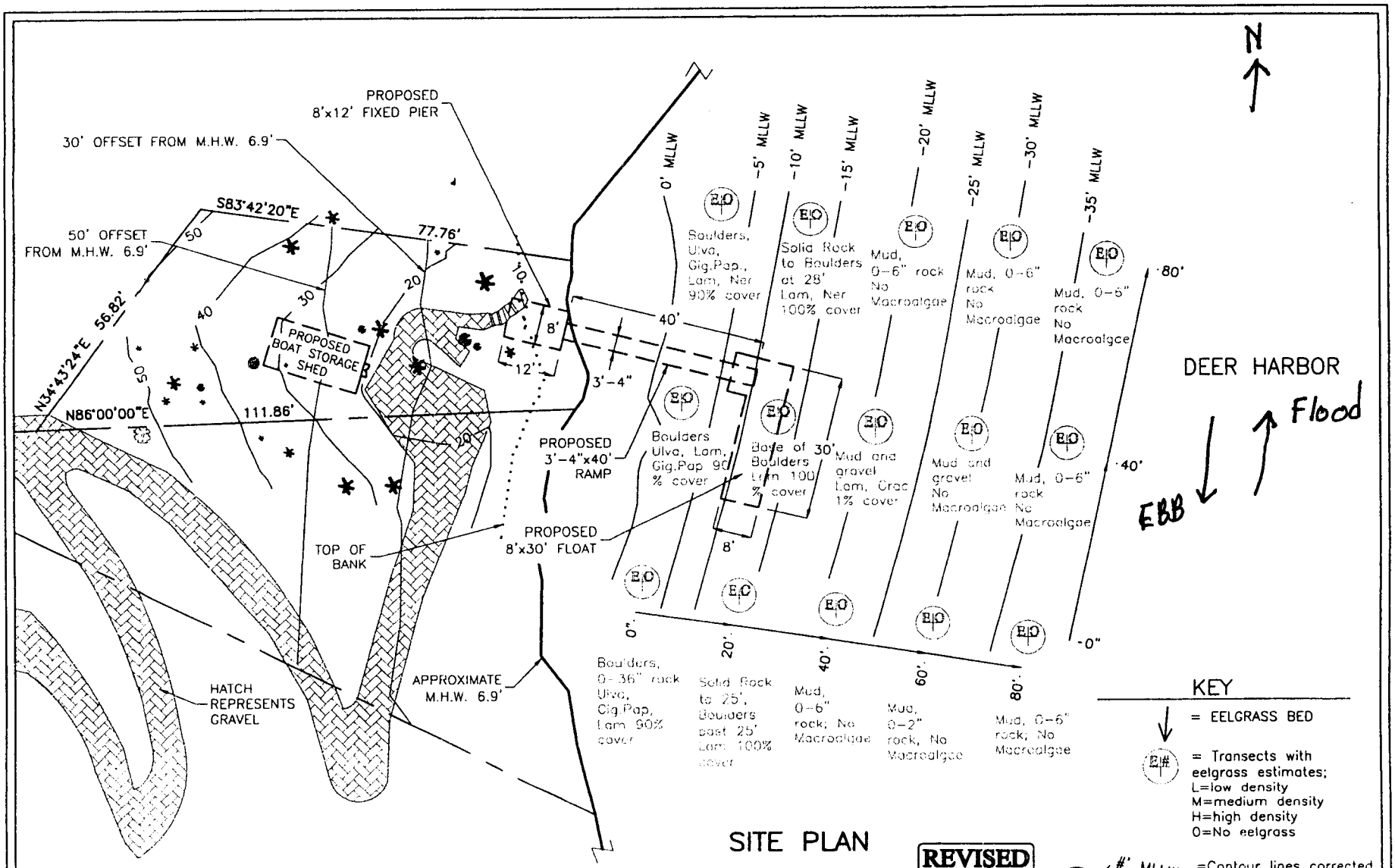

SITE PLAN

REVISED 5-14-03

20030782

NOTE:
CONSTRUCT A NEW PIER, RAMP, AND FLOATS THAT WILL BE USED FOR JOINT USE BOAT MOORAGE FOR SACKS, SARVER, AND BIANCHI. THE FACILITY WILL CONSIST OF AN 8'x12' PIER, WITH A 3'-4"x40' RAMP, WITH A 4'x8' LANDING FLOAT, AND AN 8'x30' MOORAGE FLOAT. THE FLOAT WOULD BE ANCHORED WITH UP TO (2) MOORING PILES AND (3) ANCHORS FOR FLOAT STABILITY. THE COMBINED FIXED PILE PIER, RAMP, AND FLOAT WILL EXTEND APPROXIMATELY 45'± WATERWARD FROM THE MEAN HIGHER HIGH WATER (MHHW) LINE.

ALGAE ABBREVIATIONS

GIG. PAP. = Gigartina papillata
GRAC. = Gracilaria
LAM. = Laminaria
NER. = Nereocystis
ULVA = Ulva

PROPOSED: CONSTRUCT NEW JOINT USE BOAT MOORAGE FOR SACKS, SARVER, AND BIANCHI.	
IN: DEER HARBOR	
AT: SAN JUAN COUNTY	APPLICATION#:
APPLICANT: LARRY & LINDA SACKS 66 TIFT LANE ORCAS ISLAND, WA. 98245	
PAGE: 4 OF: 7	
DATE: 10-15-02	DWG#: 02-3215-A.4-1

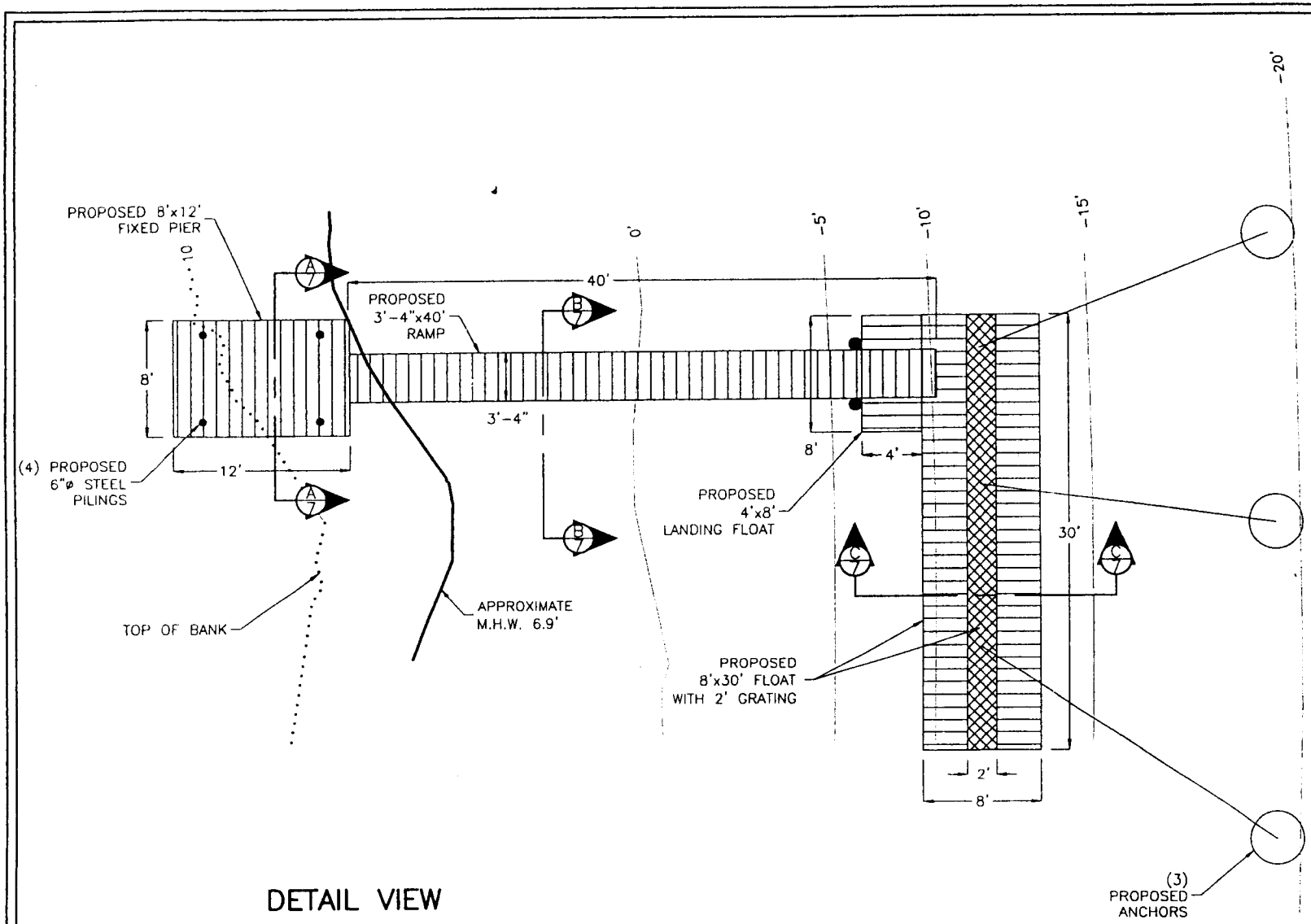

DETAIL VIEW

12' 8' 6' 4' 0' 12'

SCALE: 3/32"=1'

NOTE:
CONSTRUCT A NEW PIER, RAMP, AND FLOATS THAT WILL BE USED FOR JOINT USE BOAT MOORAGE FOR SACKS, SARVER, AND BIANCHI. THE FACILITY WILL CONSIST OF AN 8'x12' PIER, WITH A 3'-4"x40' RAMP, WITH A 4'x8' LANDING FLOAT, AND AN 8'x30' MOORAGE FLOAT. THE FLOAT WOULD BE ANCHORED WITH UP TO (2) MOORING PILES AND (3) ANCHORS FOR FLOAT STABILITY. THE COMBINED FIXED PILE PIER, RAMP, AND FLOAT WILL EXTEND APPROXIMATELY 45'± WATERWARD FROM THE MEAN HIGHER HIGH WATER (MHHW) LINE.

200300289

REVISED 5-14-03

PROPOSED: CONSTRUCT NEW JOINT USE BOAT MOORAGE FOR SACKS, SARVER, AND BIANCHI.	
IN: DEER HARBOR	
AT: SAN JUAN COUNTY	APPLICATION#:
APPLICANT: LARRY & LINDA SACKS 66 TIFT LANE ORCAS ISLAND, WA. 98245	
PAGE: 5 OF: 7	
DATE: 10-15-02	DWG#: 02-3215-A.5-1

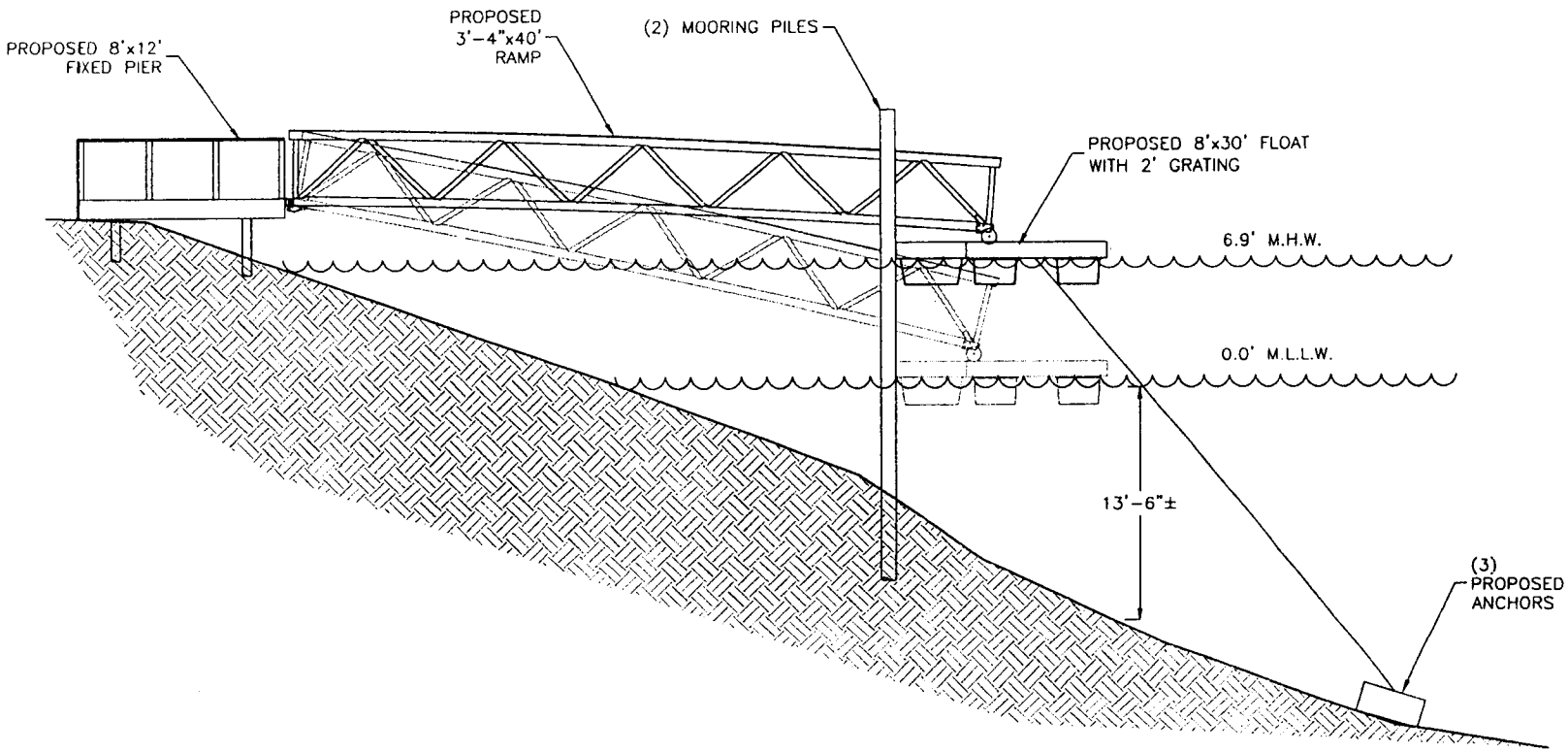

ELEVATION VIEW

12' 8' 6' 4' 0' 12'

SCALE: 3/32"=1'

NOTE:
CONSTRUCT A NEW PIER, RAMP, AND FLOATS THAT WILL BE USED FOR JOINT USE BOAT MOORAGE FOR SACKS, SARVER, AND BIANCHI. THE FACILITY WILL CONSIST OF AN 8'x12' PIER, WITH A 3'-4"x40' RAMP, WITH A 4'x8' LANDING FLOAT, AND AN 8'x30' MOORAGE FLOAT. THE FLOAT WOULD BE ANCHORED WITH UP TO (2) MOORING PILES AND (3) ANCHORS FOR FLOAT STABILITY. THE COMBINED FIXED PILE PIER, RAMP, AND FLOAT WILL EXTEND APPROXIMATELY 45'± WATERWARD FROM THE MEAN HIGHER HIGH WATER (MHHW) LINE.

200300782

REVISED 5-14-03

PROPOSED: CONSTRUCT NEW JOINT USE BOAT MOORAGE FOR SACKS, SARVER, AND BIANCHI.	
IN: DEER HARBOR	
AT: SAN JUAN COUNTY	APPLICATION#:
APPLICANT: LARRY & LINDA SACKS 66 TIFT LANE ORCAS ISLAND, WA. 98245	
PAGE: 6 OF: 7	
DATE: 10-15-02	DWG#: 02-3215-A.6-1

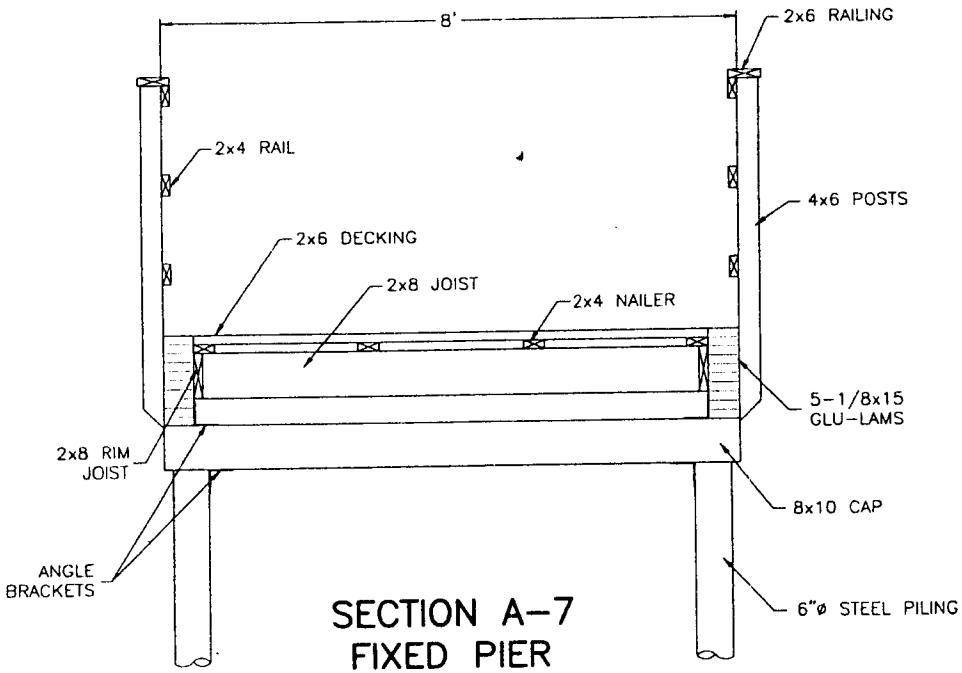

SECTION A-7
FIXED PIER

SCALE: 3/8"=1'

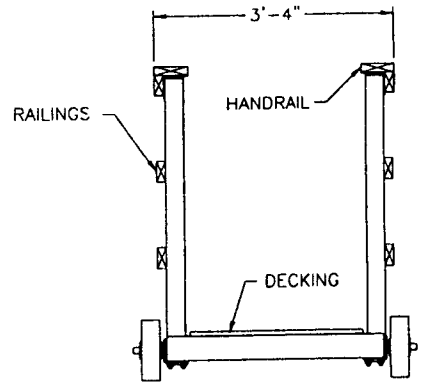

SECTION B-7
RAMP

SCALE: 3/8"=1'

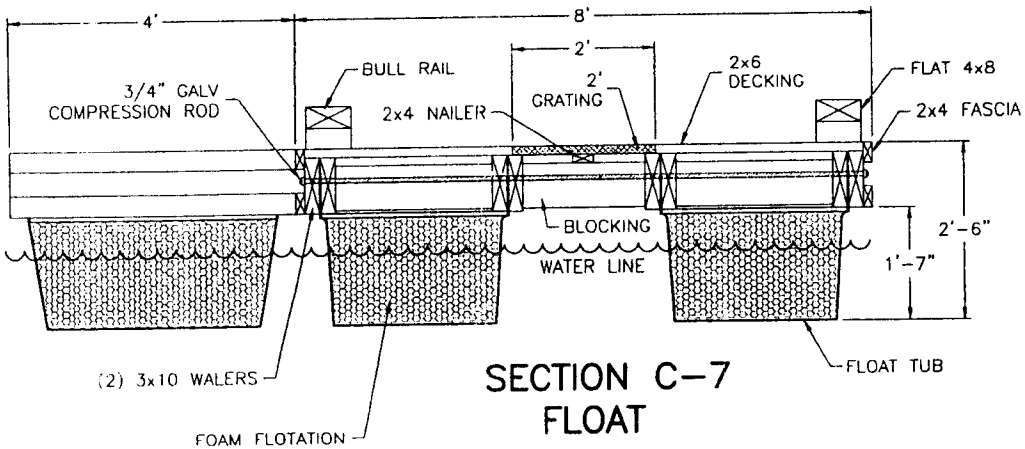

SECTION C-7
FLOAT

2' 1' 0' 2'

SCALE: 3/8"=1'

200300782

REVISED 5-14-03

PROPOSED: CONSTRUCT NEW JOINT USE BOAT MOORAGE FOR SACKS, SARVER, AND BIANCHI.	
IN: DEER HARBOR	
AT: SAN JUAN COUNTY	APPLICATION#:
APPLICANT: LARRY & LINDA SACKS 66 TIFT LANE ORCAS ISLAND, WA. 98245	
PAGE: 7 OF: 7	
DATE: 10-15-02	DWG#: 02-3215-A.7-1

STATE OF WASHINGTON
DEPARTMENT OF ECOLOGY
P.O. Box 47600 • Olympia, Washington 98504-7600
(360) 407-6000 • TDD Only (Hearing Impaired) (360) 407-6006

STATE OF WASHINGTON
DEPARTMENT OF ECOLOGY

Notice of Application for
Certification of Consistency with the
Washington Coastal Zone Management Program

Date: July 30, 2004

Notice is herby given that a request has been filed with the Department of Ecology, pursuant to the requirements of Section 307© of the federal Coastal Zone Management Act of 1972 (16 U.S.C. 1451), to certify that the project described in the U.S. Army Corps of Engineers Public Notice No. 200300282 will comply with the Washington State Coastal Zone Management Program and that the project will be conducted in a manner consistent with that Program.

Any person desiring to present views on the project pertaining to the project's compliance or consistency with the Washington State Coastal Zone Management Program may do so by providing written comments within 30 days of the above publication date to:

Federal Permit Coordinator
Department of Ecology
SEA Program
Post Office Box 47600
Olympia, Washington 98504-7600