US Army Corps
of Engineers
Seattle District

Public Notice of Application for Permit

Regulatory Branch
Post Office Box 3755
Seattle, Washington 98124-3755
Telephone (206) 764-3495
ATTN: Susan Glenn, Project Manager

Public Notice Date: June 3, 2004
Expiration Date: July 3, 2004
Reference: 200301007
Name: Everett, Port of

Interested parties are hereby notified that an application has been received for a Department of the Army permit in accordance with Section 10 of the Rivers and Harbors Act of March 3, 1899, and Section 404 of the Clean Water Act for certain work described below and shown on the enclosed drawings.

APPLICANT - Port of Everett
Post Office Box 538
Everett, Washington 98206
ATTN: Mr. Graham Anderson
Telephone: (425) 388-0703

LOCATION - In the Snohomish River Channel from the 1100 block to the 1500 block of West Marine View Drive, Everett, Snohomish County, Washington in Section 18, Township 29N, Range 4E.

WORK – Construct a 100-berth marina, and boat haul-out facilities in the 12th Street basin.

The project will include the following elements:

- Relocate existing boat haul-out facility from the northeast corner of the North Marina to the southeast corner of the new 12th Street Marina.
- Expand marina by 100 berths in the 12th Street basin. Work also includes construction of a launch pier and ramp.
- Dredge 9.1 acres of mudflats to depth of up to –14 feet MLLW.
- Construct tall ship moorage area.
- Extend existing fuel float.

Dredging and marina construction will take approximately 9 months to complete.

PURPOSE – To provide additional permanent moorage slips in the central Puget Sound area for vessels between 40 and 70 feet in length, and to upsize and modernize existing North Marina haul-out facilities.

PUGET SOUND DREDGED DISPOSAL ANALYSIS (PSDDA) –

a. Dredged Material Testing: The proposed dredged material has been tested according to the procedures specified in PSDDA, a multi-agency program for the evaluation of dredged material proposed for disposal at open-water sites in Puget Sound. The PSDDA evaluations may include both chemical and biological testing of sediments. For this project, the PSDDA agencies determined that all 300,000 cubic yards were suitable for unconfined disposal at the PSDDA nondispersive open-water disposal site in Port Gardner. The sediment

testing data are available at the U.S. Army Corps of Engineers (Corps), Seattle District, Dredged Material Management Office.

b. Disposal Site Use Conditions: The following standard site use conditions will be specified by the Corps and the Washington Department of Natural Resources as part of the Federal/State permitting processes: (1) during the periods of tribal fishing in the disposal site area, disposal will only occur during daylight hours; and (2) during the daylight hours, "navigation rules of the road" will apply to the dredger in the event Indian treaty fishing is occurring at the disposal site. The dredger's permit will state that disposal is to occur when there is no treaty fishing occurring at the disposal site. Other appropriate special conditions may be added as a result of comments received during the public review period for this public notice.

The proposed dredging is expected to take approximately 3 months. Existing banks of the 12th Street basin will be stabilized where necessary and recontoured to provide slopes of 2 horizontal to 1 vertical (2h:1v). Slopes will be armored with riprap as necessary for stability. A bench of lower slope will be constructed at elevation +10 to +11 feet MLLW. This bench will be provided with a fine grained substrate that will allow establishment of a fringe of brackish marsh vegetation to more than replace that which will be lost, mostly from the east margin of the waterway. Shoreline and beach construction may occur in part from barges and in part using land based equipment. Land based equipment will stage on Port owned property to the east and south of the waterway.

ADDITIONAL INFORMATION –The new marina will accommodate up to 290 vessels, predominantly between 40 and 70 feet in length. Eleven gangways will be required for the project. Each is 6 feet wide and 80 feet long and will include 400 square feet of grating each for a total of 4,400 square feet. The total increase in overwater coverage will be 109,375 square feet.

To accommodate the navigation requirement of vessels anticipated to use the marina, the existing mudflats along the northern portion of the 12th Street Waterway will be dredged to depths of up to –14 feet MLLW with up to 2 feet of overdredge. Before dredging, approximately 230 existing creosote treated piles will be removed and the existing crane pier, steel loading ramps, a timber boat grid, and a pedestrian pier will also be demolished and removed. Piling will be extracted with a barge-mounted crane and/or vibratory extractor. Extracted piling and other debris will be transferred from the barge to trucks for upland disposal in a facility licensed for that purpose. Pile and pier removal will take approximately 4 to 6 weeks.

New floats and ramps will be brought to the site either by barge or truck. Materials brought by truck will be stockpiled and staged adjacent to the water along either the east or south side of the marina. Marina construction will require the placement of approximately 324 pilings ranging in diameter from 12 to 24 inches, 94 of which will be located in the tall ship area. Marina pilings will be steel or concrete to eliminate the potential for release of contaminants. Piles will be driven by a barge-mounted impact hammer. Floats and ramps will be of concrete construction with fully encapsulated flotation. All new floats will be 12 feet or less in width. Walers will be constructed of wood treated with ACZA (ammoniacal copper zinc arsenic) that will conform to industry standard best management practices (BMP's) to limit the leachability of preservative metals.

Ramp access will be provided by fixed overwater approach piers that are 10 feet wide. Ramps will be narrow (6 feet wide), constructed of aluminum, and grated to the extent practicable to minimize effects on shoreline movements of juvenile salmonids. The new facilities will increase the marina's overwater coverage by 109,375 square feet (2.5 acres), the majority of it in the form of floating structures less than or equal to 8 feet in width.

MITIGATION – The Port will expand the Union Slough Restoration Site from its present 19.2 acres to 23.8 acres, an increase of 4.6 acres of aquatic habitat below the Ordinary High Water. This additional tidal

habitat will be provided by excavation of existing uplands on Port property north of the existing site and reconnection of a remnant of a formal tidal slough into the existing site. Adjacent properties will be protected from flooding by extending the existing dike along Interstate 5 diagonally across the eastern margin of an existing pond (to avoid Washington State Department of Transportation property), and then north to the Biringer access road. This access road will be relocated to the top of the new dike that will be constructed westward to meet the north-south Union Slough Restoration Site public access road.

ENDANGERED SPECIES - The bald eagle (*Haliaeetus leucocephalus*), listed threatened; marbled murrelet (*Brachyramphus marmoratus),* listed threatened; Puget Sound chinook salmon (*Oncorhynchus tshawytscha*), listed threatened; Coastal/Puget Sound bull trout (*Salvelinus confluentus),* listed threatened; Steller sea lion (*Eumetopias jubatus)*, listed threatened; humpback whale *(Megaptera novaeangliae)*, listed endangered; and leatherback sea turtle *(Dermochelys coriacea)*, listed endangered in the state of Washington; Puget Sound/Georgia Strait coho (Oncorhynchus kisutch), proposed threatened, occur in the proposed project area.

A preliminary determination indicated that the activity "may affect, likely to adversely affect" Coastal/Puget Sound bull trout and Puget Sound chinook salmon, and will have "no effect" on bald eagles, humpback whale, and leatherback sea turtle; and will not jeopardize the continued existence of Puget Sound/Georgia Strait coho, which are all listed endangered or threatened under the Endangered Species Act of 1973. Consultation under Section 7 of the ESA was initiated with National Marine Fisheries Service and U.S. Fish and Wildlife Service on February 20, 2004.

ESSENTIAL FISH HABITAT - The Magnuson-Stevens Fishery Conservation and Management Act (MSA), as amended by the Sustainable Fisheries Act of 1996, requires all Federal agencies to consult with the National Marine Fisheries Service (NMFS) on all actions, or proposed actions, permitted, funded, or undertaken by the agency, that may adversely affect Essential Fish Habitat (EFH). EFH for Pacific salmon, groundfish, coastal pelagic species occurs in the project area. The Corps has determined that the proposed action will adversely affect approximately 20 acres of EFH for federally-managed fisheries in Washington waters. The Corps has initiated EFH consultation with the NMFS.

CULTURAL RESOURCES - The District Engineer has reviewed the latest published version of the National Register of Historic Places, lists of properties determined eligible and other sources of information. The following is current knowledge of the presence or absence of historic properties and the effects of the undertaking upon these properties.

There are no recorded historic properties within the permit area. The permit area has been so extensively modified by modern development that little likelihood exists for the proposed project to impinge upon an undisturbed historic property.

The District Engineer invites responses to this public notice from Federal, Native American Nations or tribal governments, State, and local agencies, historical and archeological societies, and other parties likely to have knowledge of or concerns with historic properties in the area.

PUBLIC HEARING - Any person may request, in writing, within the comment period specified in this notice, that a public hearing be held to consider this application. Requests for public hearings shall state, with particularity, the reasons for holding a public hearing.

EVALUATION - The decision whether to issue a permit will be based on an evaluation of the probable impact, including cumulative impacts of the proposed activity on the public interest. That decision will reflect the national concern for both protection and utilization of important resources. The benefits which reasonably may be expected to accrue from the proposal must be balanced against its reasonably foreseeable detriments. All factors which may be relevant to the proposal will be considered, including the cumulative effects thereof;

among those are conservation, economics, aesthetics, general environmental concerns, wetlands, historic properties, fish and wildlife values, flood hazards, floodplain values, land use, navigation, shoreline erosion and accretion, recreation, water supply and conservation, water quality, energy needs, safety, food and fiber production, mineral needs, considerations of property ownership, and, in general, the needs and welfare of the people.

The Corps is soliciting comments from the public; Federal, Native American Nations or tribal governments, State, and local agencies and officials; and other interested parties in order to consider and evaluate the impacts of this activity. Any comments received will be considered by the Corps to determine whether to issue, modify, condition or deny a permit for the work. To make this decision, comments are used to assess impacts on endangered species, historic properties, water quality, general environmental effects, and the other public interest factors listed above. Comments are used in the preparation of an Environmental Assessment and/or an Environmental Impact Statement pursuant to the National Environmental Policy Act. Comments are also used to determine the need for a public hearing and to determine the overall public interest of the activity.

The evaluation of the impact of the activity on the public interest will include application of the guidelines promulgated by the Administrator, Environmental Protection Agency, under authority of Section 404(b) of the Clean Water Act. This evaluation will include an alternatives analysis.

ADDITIONAL EVALUATION - The State of Washington is reviewing this work for consistency with the approved Washington Coastal Zone Management Program and for compliance with the applicable State and Federal water quality standards pursuant to Section 401 of the Clean Water Act.

This proposal is the subject of Shorelines Substantial Development Permit No. SMA-04-001, being processed by the City of Everett.

COMMENT AND REVIEW PERIOD – Conventional mail or e-mail comments on this public notice will be accepted and made part of the record and will be considered in determining whether it would be in the public interest to authorize this proposal. In order to be accepted, e-mail comments must originate from the author's e-mail account and must include on the subject line of the e-mail message the permit applicant's name and reference number as shown below. All e-mail comments should be sent to Susan.S.Glenn@nws02.usace.army.mil. Conventional mail comments should be sent ATTN: Regulatory Branch. Both conventional mail or e-mail comments must include the permit applicant's name and reference number, as shown below, and the commentor's name, address, and phone number. All comments whether conventional mail or e-mail must reach this office, no later than the expiration date of this public notice to ensure consideration. Please include the following name and reference number:

Everett, Port of
200301007

Encl
Drawings (22)

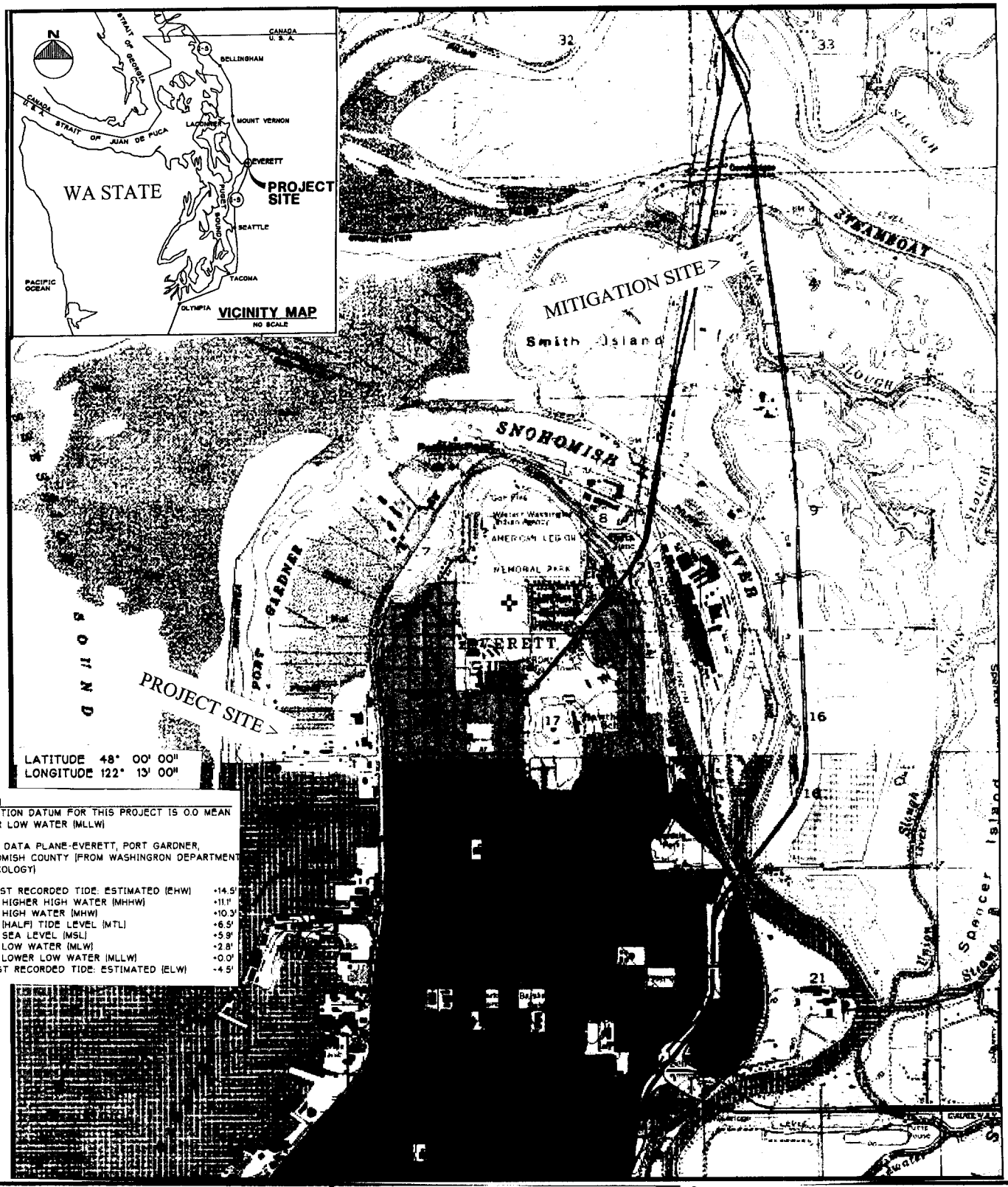

DATUM
ELEVATION DATUM FOR THIS PROJECT IS 0.0 MEAN LOWER LOW WATER (MLLW)

TIDAL DATA PLANE-EVERETT, PORT GARDNER, SNOHOMISH COUNTY (FROM WASHINGRON DEPARTMENT OF ECOLOGY)

HIGHEST RECORDED TIDE: ESTIMATED (EHW)	+14.5'
MEAN HIGHER HIGH WATER (MHHW)	+11.1'
MEAN HIGH WATER (MHW)	+10.3'
MEAN (HALF) TIDE LEVEL (MTL)	+6.5'
MEAN SEA LEVEL (MSL)	+5.9'
MEAN LOW WATER (MLW)	+2.8'
MEAN LOWER LOW WATER (MLLW)	+0.0'
LOWEST RECORDED TIDE: ESTIMATED (ELW)	-4.5'

PURPOSE:
MAINTENANCE, REPAIR & DEVELOPMENT
#200301007
DATUM: 0.0' M.L.L.W.
ADJACENT PROPERTY OWNERS:
1) NORTON INDUSTRIES
2) PORT/CITY OF EVERETT SNOHOMISH COUNTY (JOINTLY)
3) US NAVY

12TH ST MARINA

VICINITY MAP

SCALE AS NOTED

PORT OF EVERETT
2911 BOND STREET
EVERETT, WA. 98201

PROPOSED: FUEL DOCK AREA & CHANNEL RENOVATION.
12TH ST BASIN DEVELOPMENT
IN: SNOHOMISH RIVER CHANNEL
AT: EVERETT, WA.
SEC 18, T29N, R5E
APPLICATION BY:
PORT OF EVERETT
(425) 388-0715
SHEET 1 **of** 22 **DATE:** AUG. 2003

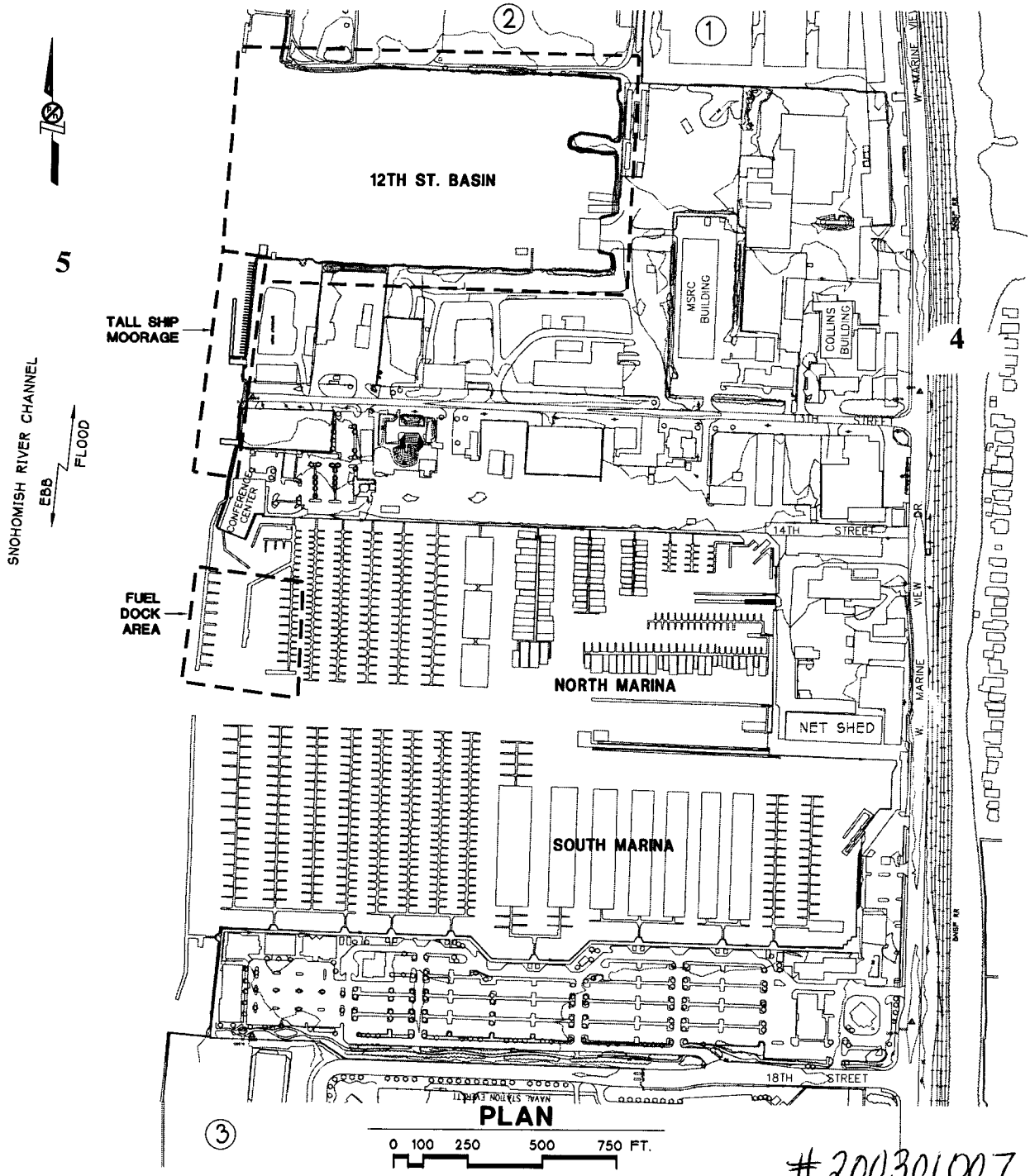

PLAN

#200301007

PURPOSE: MAINTENANCE, REPAIR & DEVELOPMENT

DATUM: 0.0' M.L.L.W.

ADJACENT PROPERTY OWNERS:
1) NORTON INDUSTRIES
2) PORT/CITY OF EVERETT AND SNOHOMISH COUNTY (JOINTLY)
3) US NAVY

12TH ST MARINA

EXISTING FACILITY PLAN

SCALE AS NOTED

PORT OF EVERETT
2911 BOND STREET
EVERETT, WA. 98201

PROPOSED: FUEL DOCK AREA & CHANNEL RENOVATION. 12TH ST BASIN DEVELOPMENT

IN: SNOHOMISH RIVER CHANNEL

AT: EVERETT, WA.
SEC 18, T29N, R5E

APPLICATION BY:
PORT OF EVERETT
(425) 388-0715

SHEET 2 **of** 22 **DATE:** AUG. 2003

Drawings\2002\02455-12TH STREET MARINA\PERMIT 8-21-2003\02455.03-02.dwg

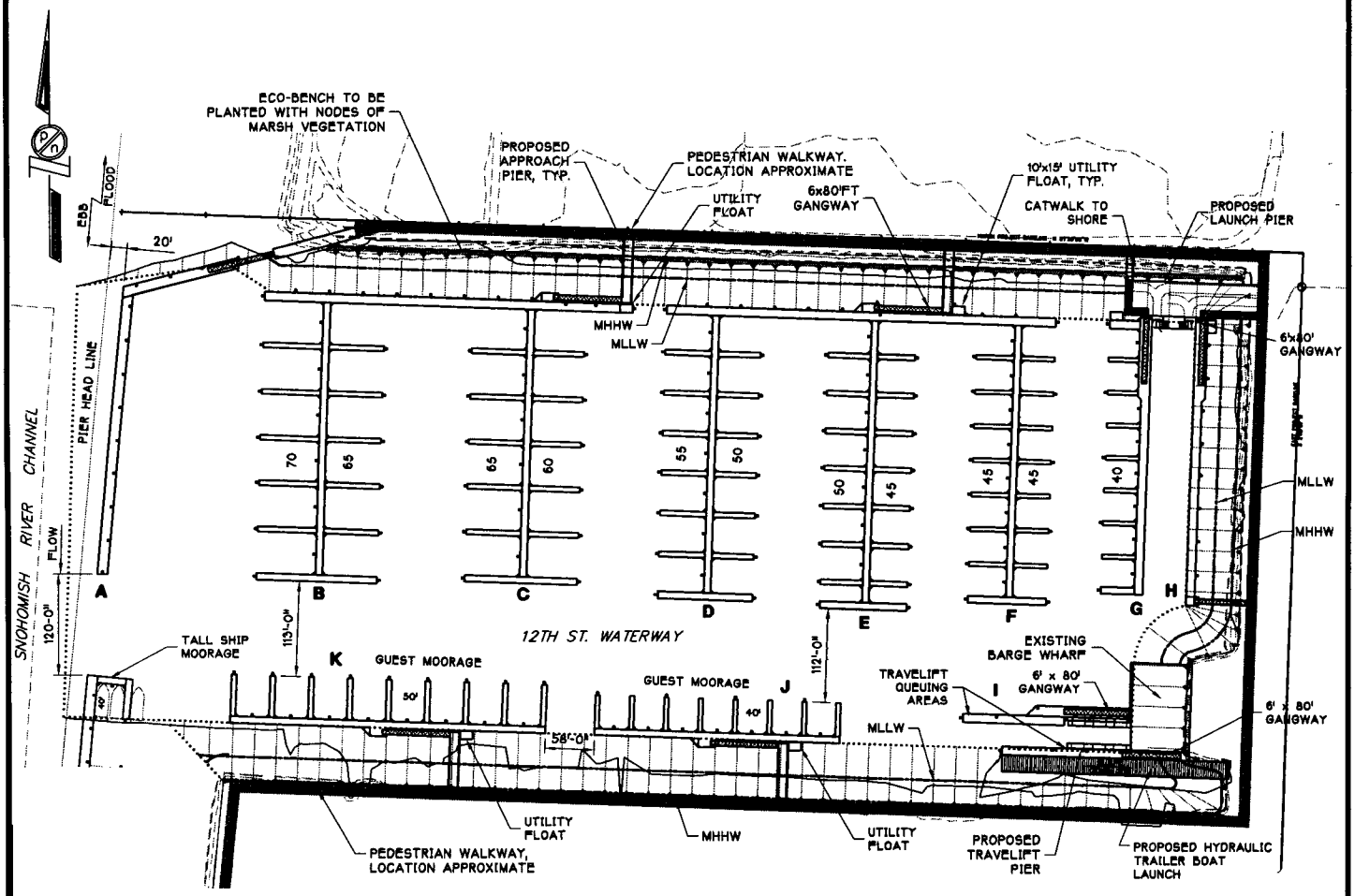

PLAN

0 50 100 200 300 FT.

NEW CONCRETE FLOATS		
	APPROX. SQUARE FOOTAGE:	APPROX. No. PILES
'A' FLOAT	6,000	13
'B' & 'C'	21,200	48
'D', 'E' & 'F'	27,400	76
'J'	4,500	11
'K'	6,300	17
'I' TRAVELIFT	4,200	11
G&H HYDRO-LIFT	10,100	21
TOTAL	79,700	197

NEW PIERS & RAMPS		
	APPROX. SQUARE FOOTAGE:	APPROX. No. PILES
'A' FLOAT	1,700	14
'B' & 'C'	1,400	12
'D', 'E' & 'F'	1,400	12
'J'	1,400	12
'K'	1,400	12
'I' TRAVELIFT	1,600	20
LAUNCH PIER	7,000	45
LAUNCH RAMP	5,400	--
TOTAL	21,300	127

#200301007

PURPOSE: MAINTENANCE, REPAIR & DEVELOPMENT

DATUM: 0.0' M.L.L.W.

ADJACENT PROPERTY OWNERS:

12TH ST MARINA

12th St. BASIN PROPOSED PLAN

SCALE AS NOTED

PORT OF EVERETT
2911 BOND STREET
EVERETT, WA. 98201

PROPOSED: FUEL DOCK AREA & CHANNEL RENOVATION. 12TH ST BASIN DEVELOPMENT

IN: SNOHOMISH RIVER CHANNEL

AT: EVERETT, WA.
SEC 18, T29N, R5E

APPLICATION BY:
PORT OF EVERETT
(425) 388-0715

SHEET 3 **of** 22 **DATE:** AUG. 2003

Drawings\2002\02455-12TH STREET MARINA\PERMIT 8-21-2003\02455.03-12.dwg

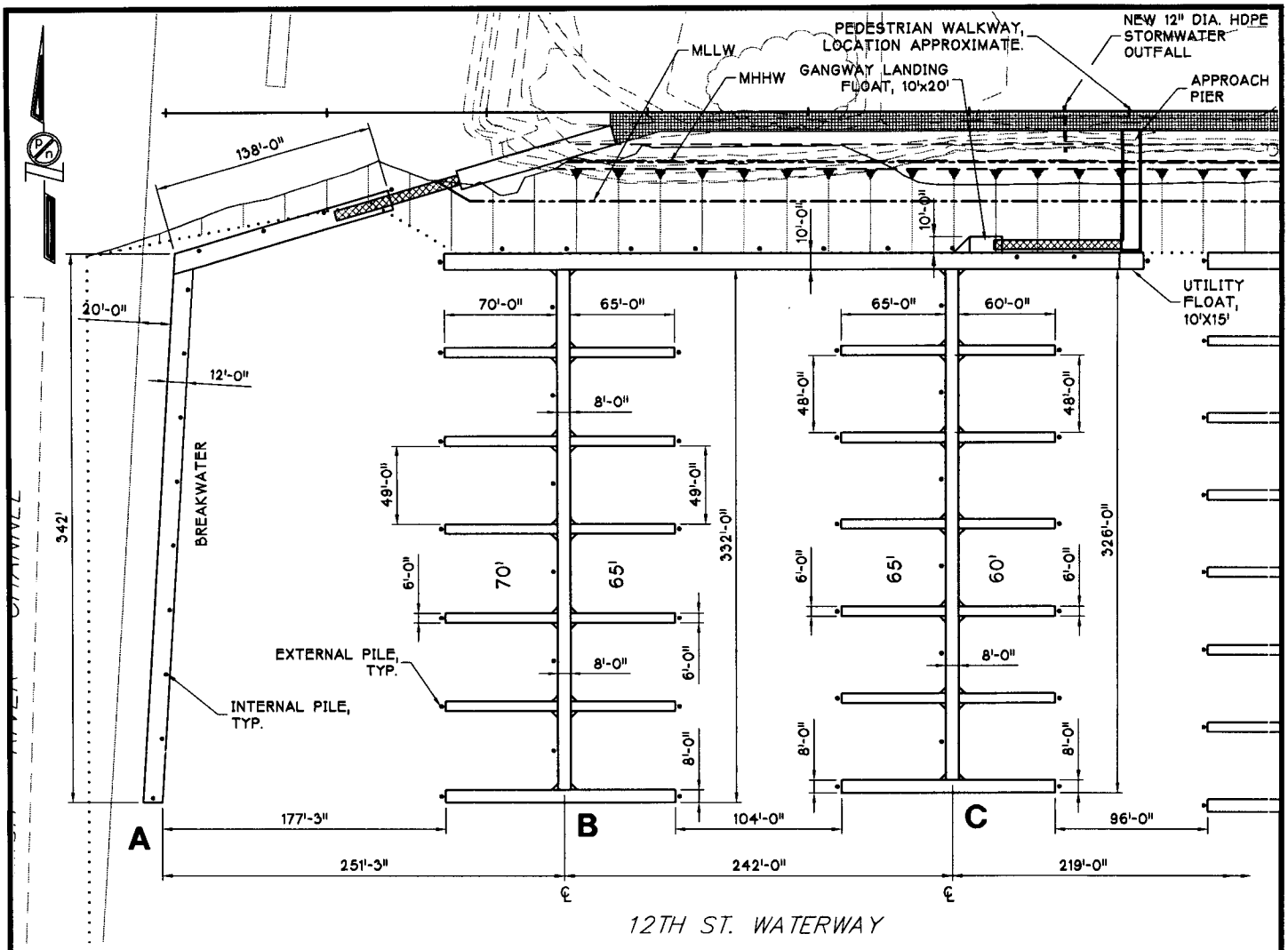

PLAN
FLOATS A, B & C

0 25 50 100 150 FT.

#200301007

PURPOSE: MAINTENANCE, REPAIR & DEVELOPMENT

DATUM: 0.0' M.L.L.W.

ADJACENT PROPERTY OWNERS:

12TH ST MARINA

FLOATS A, B & C PROPOSED PLAN

SCALE AS NOTED

PORT OF EVERETT
2911 BOND STREET
EVERETT, WA. 98201

PROPOSED: FUEL DOCK AREA & CHANNEL RENOVATION. 12TH ST BASIN DEVELOPMENT

IN: SNOHOMISH RIVER CHANNEL

AT: EVERETT, WA.

SEC 18, T29N, R5E

APPLICATION BY:

PORT OF EVERETT
(425) 388-0715

SHEET 4 of 22 **DATE:** AUG. 2003

Drawings\2002\02455-12TH STREET MARINA\PERMIT 8-21-2003\02455.03-13.dwg

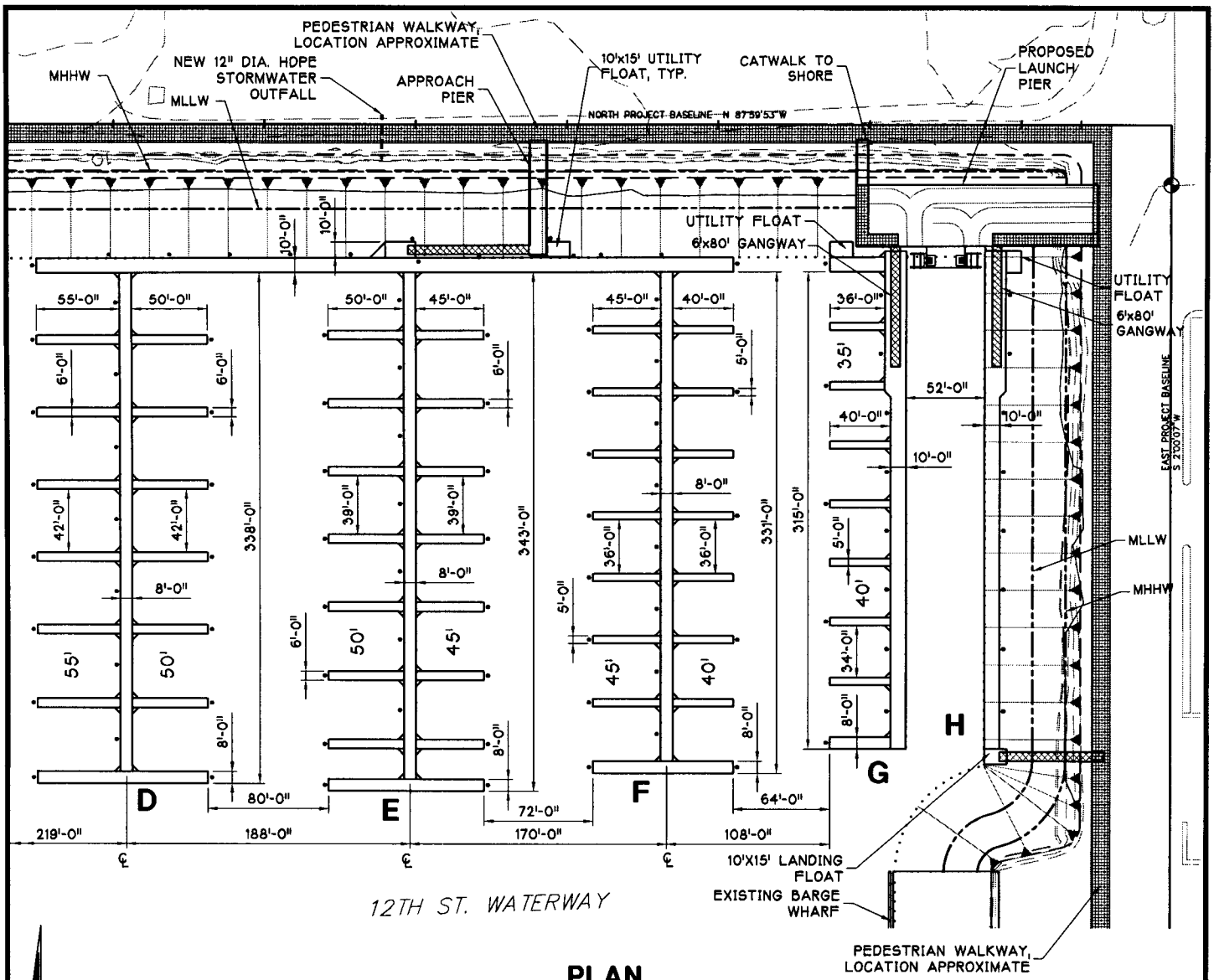

PLAN
FLOATS D, E, F, G & H

0 25 50 100 150 FT.

#200301007

PURPOSE: MAINTENANCE, REPAIR & DEVELOPMENT

DATUM: 0.0' M.L.L.W.

ADJACENT PROPERTY OWNERS:

12TH ST MARINA

FLOATS D, E, F & G PROPOSED PLAN

SCALE AS NOTED

PORT OF EVERETT
2911 BOND STREET
EVERETT, WA. 98201

PROPOSED: FUEL DOCK AREA & CHANNEL RENOVATION. 12TH ST BASIN DEVELOPMENT

IN: SNOHOMISH RIVER CHANNEL

AT: EVERETT, WA.
SEC 18, T29N, R5E

APPLICATION BY:
PORT OF EVERETT
(425) 388-0715

SHEET 5 of 22 **DATE:** AUG. 2003

Drawings\2002\02455-12TH STREET MARINA\PERMIT 8-21-2003\02455.03-14.dwg

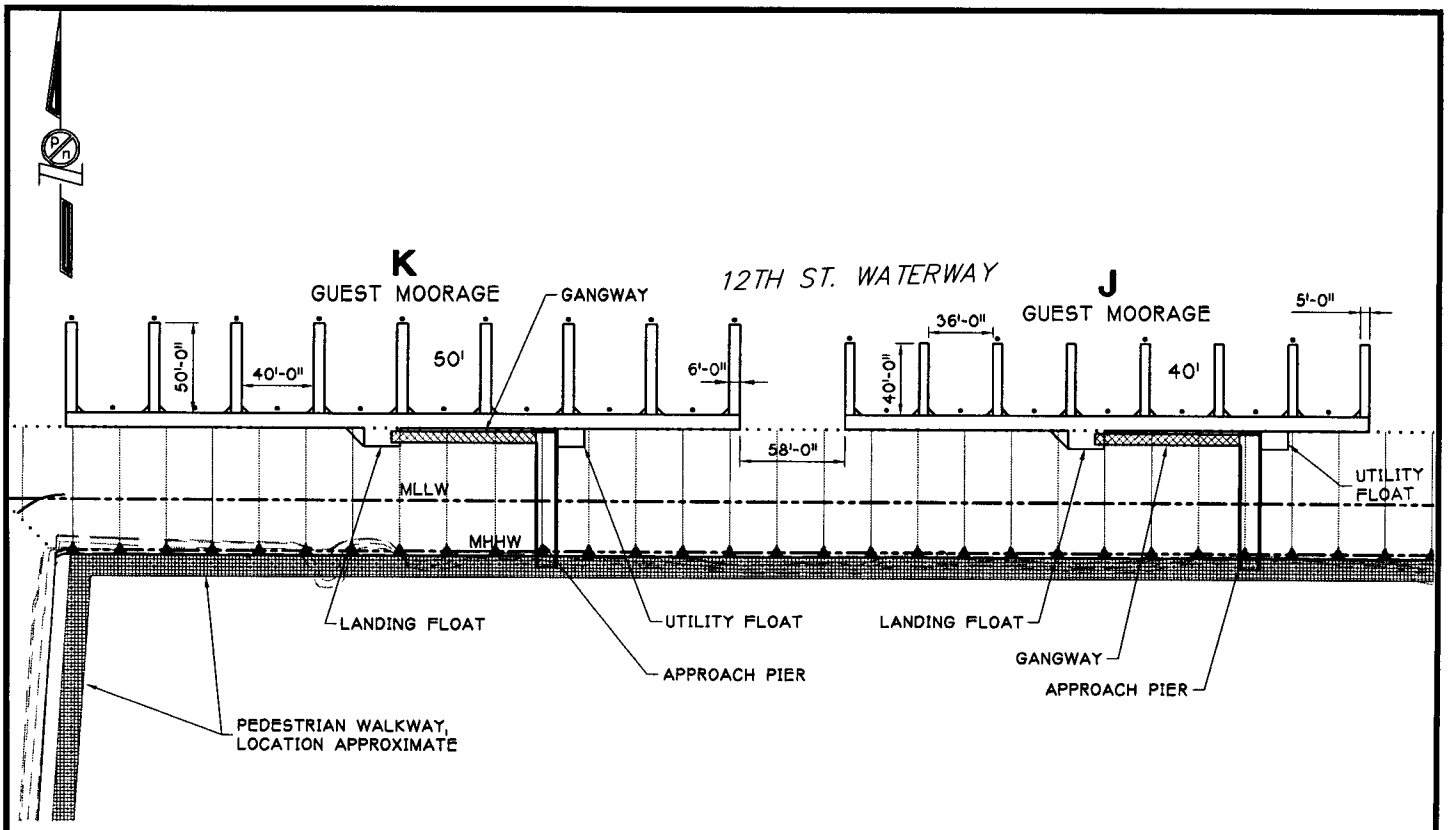

J & K GUEST MOORAGE FLOATS

0 25 50 100 150 FT.

#200301007

PURPOSE: MAINTENANCE, REPAIR & DEVELOPMENT

DATUM: 0.0' M.L.L.W.

ADJACENT PROPERTY OWNERS:

12TH ST MARINA

J & K GUEST MOORAGE PROPOSED PLAN

SCALE AS NOTED

PORT OF EVERETT
2911 BOND STREET
EVERETT, WA. 98201

PROPOSED: FUEL DOCK AREA & CHANNEL RENOVATION. 12TH ST BASIN DEVELOPMENT

IN: SNOHOMISH RIVER CHANNEL

AT: EVERETT, WA.

SEC 18, T29N, R5E

APPLICATION BY:

PORT OF EVERETT
(425) 388-0715

SHEET 6 **of** 22 **DATE:** AUG. 2003

Drawings\2002\02455-12TH STREET MARINA\PERMIT 8-21-2003\02455.03-15.dwg

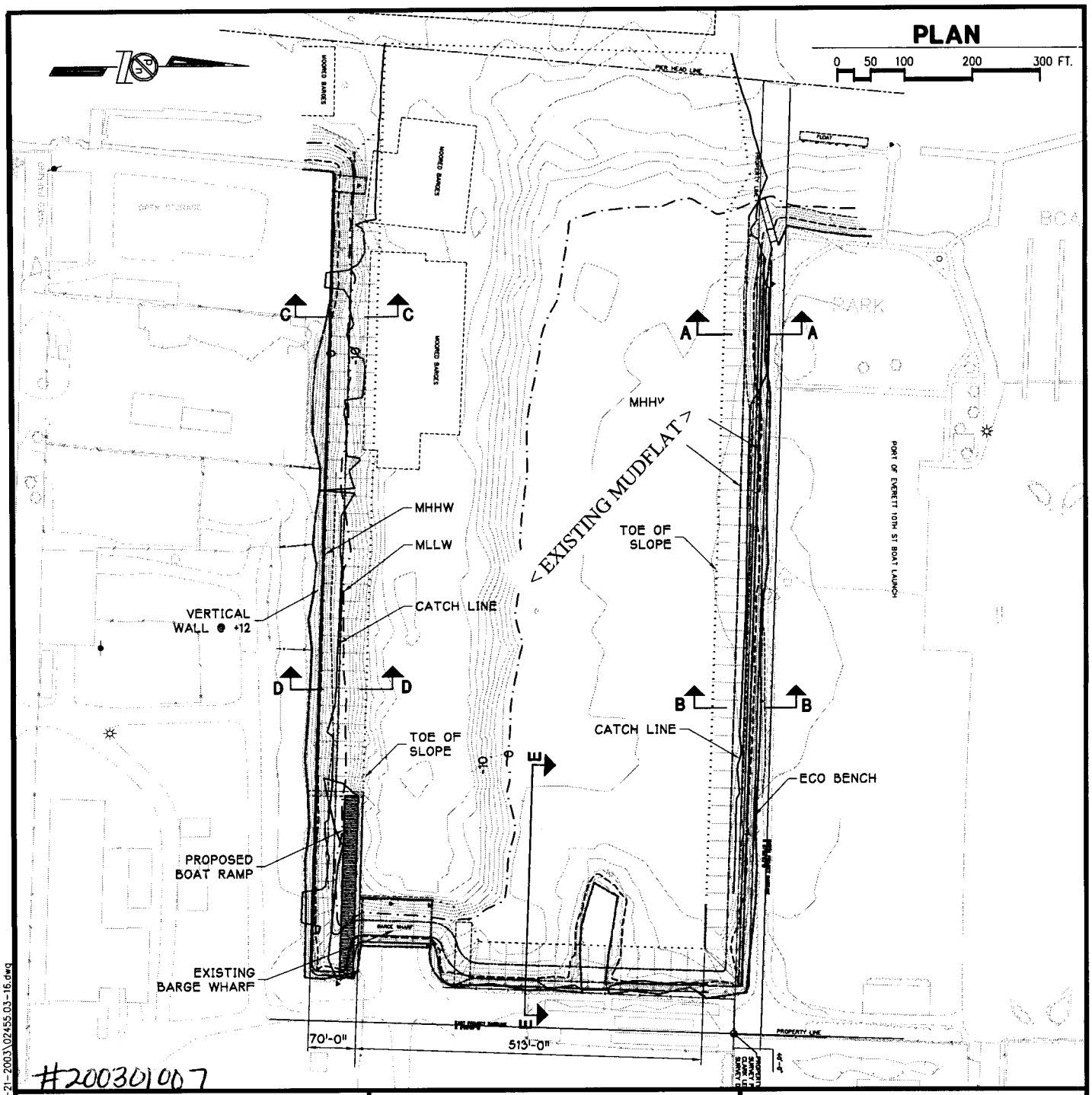

#200301007

PURPOSE: MAINTENANCE, REPAIR & DEVELOPMENT

DATUM: 0.0' M.L.L.W.

ADJACENT PROPERTY OWNERS:

12TH ST MARINA

PROPOSED DREDGE PLAN

SCALE AS NOTED

PORT OF EVERETT
2911 BOND STREET
EVERETT, WA. 98201

PROPOSED: FUEL DOCK AREA & CHANNEL RENOVATION. 12TH ST BASIN DEVELOPMENT

IN: SNOHOMISH RIVER CHANNEL

AT: EVERETT, WA.
SEC 18, T29N, R5E

APPLICATION BY:
PORT OF EVERETT
(425) 388-0715

SHEET 7 of 22 **DATE:** AUG. 2003

Drawings\2002\02455-12TH STREET MARINA\PERMIT 8-21-2003\02455.03-16.dwg

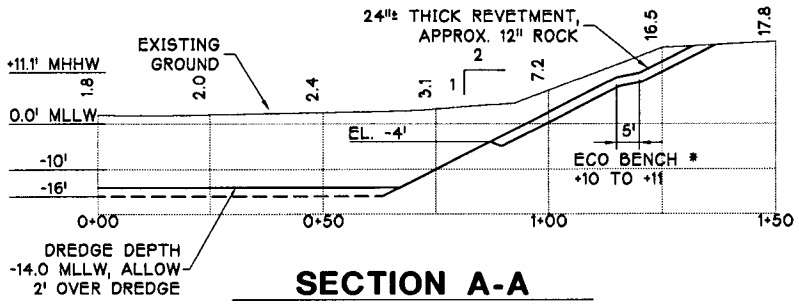

SECTION A-A

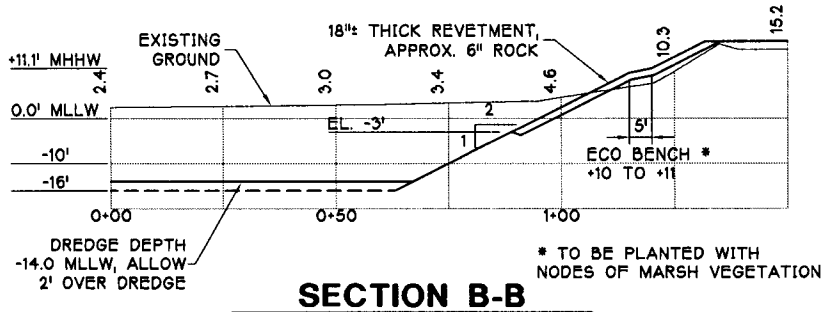

SECTION B-B

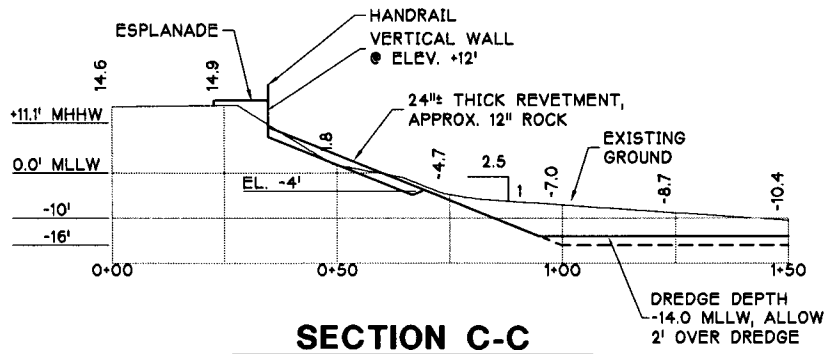

SECTION C-C

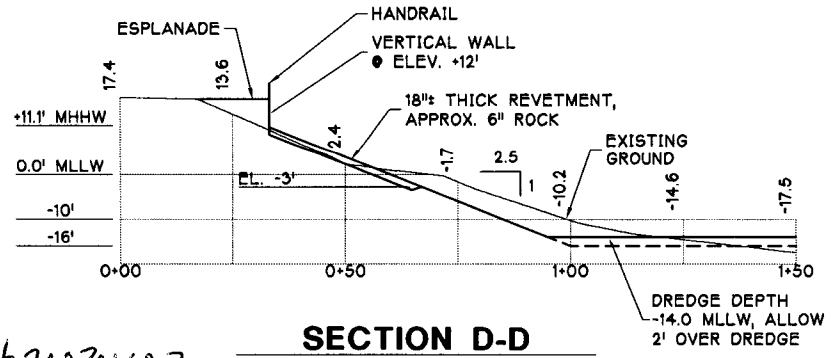

SECTION D-D

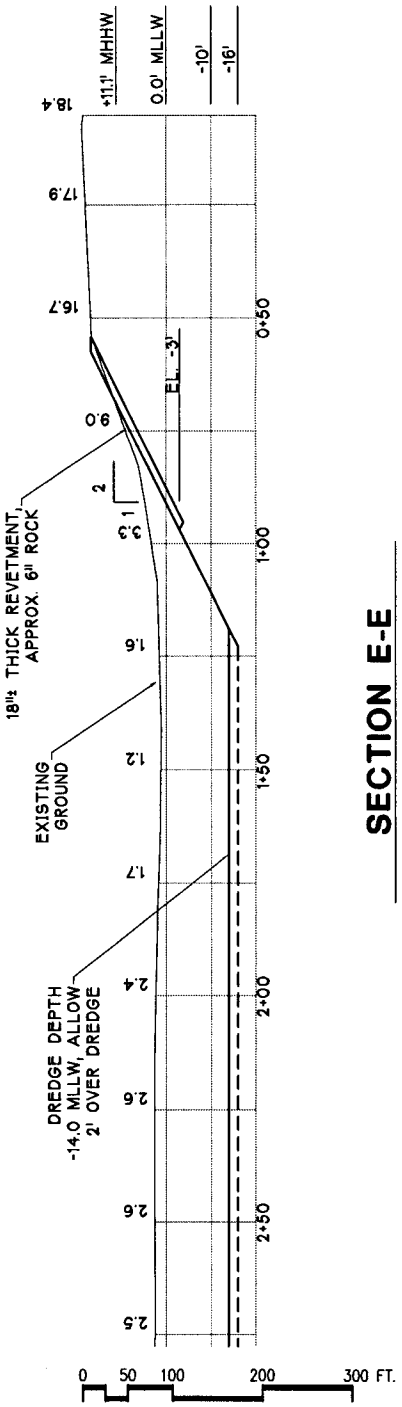

SECTION E-E

#20030107

PURPOSE: MAINTENANCE, REPAIR & DEVELOPMENT

DATUM: 0.0' M.L.L.W.

ADJACENT PROPERTY OWNERS:

12TH ST MARINA

PROPOSED DREDGE SECTIONS

SCALE AS NOTED

PORT OF EVERETT
2911 BOND STREET
EVERETT, WA. 98201

PROPOSED: FUEL DOCK AREA & CHANNEL RENOVATION. 12TH ST BASIN DEVELOPMENT

IN: SNOHOMISH RIVER CHANNEL

AT: EVERETT, WA.

SEC 18, T29N, R5E

APPLICATION BY:

PORT OF EVERETT
(425) 388-0715

SHEET 8 **of** 22 **DATE:** AUG. 2003

Drawings\2002\02455-12th STREET MARINA\PERMIT 8-21-2003\02455.03-17.dwg

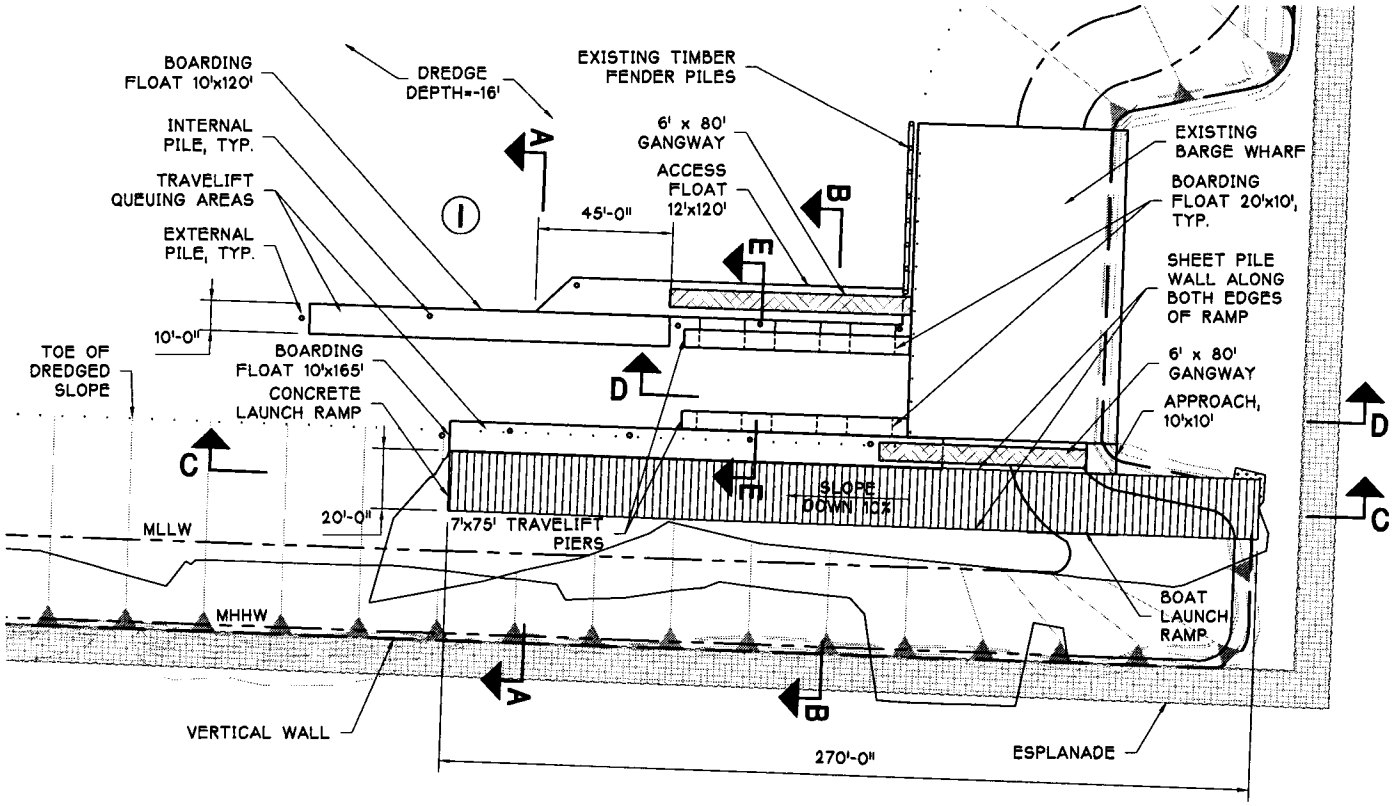

PLAN

0 10 20 30 60 90 FT.

#200301007

PURPOSE: MAINTENANCE, REPAIR & DEVELOPMENT

DATUM: 0.0' M.L.L.W.

ADJACENT PROPERTY OWNERS:

12TH ST MARINA

PROPOSED TRAVELIFT & BOAT LAUNCH RAMP

SCALE AS NOTED

PORT OF EVERETT
2911 BOND STREET
EVERETT, WA. 98201

PROPOSED: FUEL DOCK AREA & CHANNEL RENOVATION. 12TH ST BASIN DEVELOPMENT

IN: SNOHOMISH RIVER CHANNEL

AT: EVERETT, WA.

SEC 18, T29N, R5E

APPLICATION BY:

PORT OF EVERETT
(425) 388-0715

SHEET 9 **of** 22 **DATE:** AUG. 2003

Drawings\2002\02455-12TH STREET MARINA\PERMIT 8-21-2003\02455 03-18.dwg

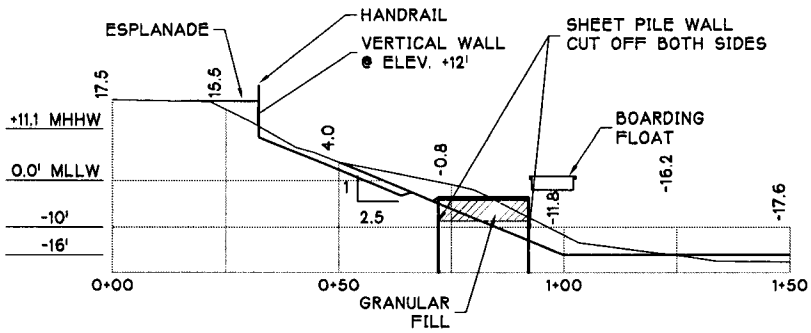

SECTION A-A

0 20 40 80 120 FT.

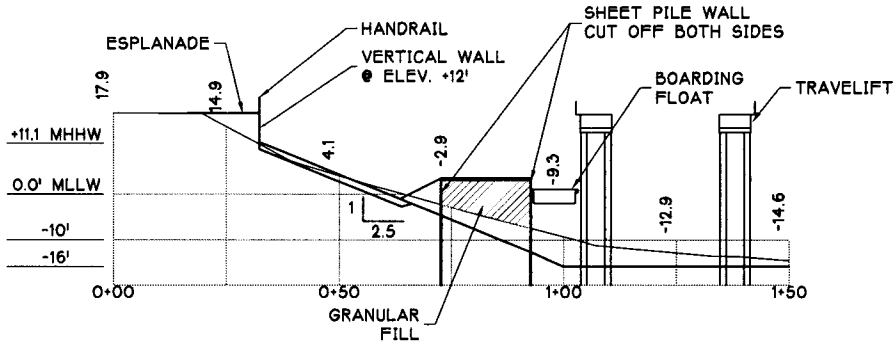

SECTION B-B

0 10 20 40 60 FT.

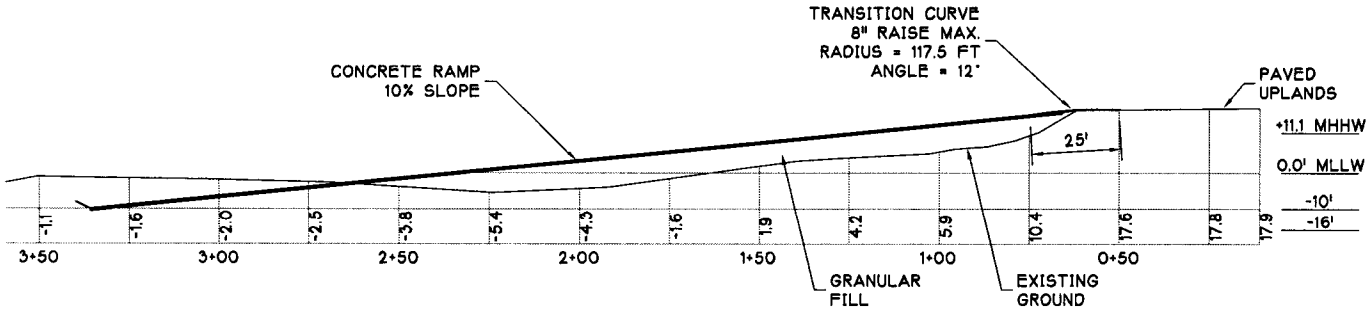

SECTION C-C

0 25 50 750 FT.

#20030100 7

PURPOSE:
MAINTENANCE, REPAIR & DEVELOPMENT

DATUM: 0.0' M.L.L.W.

ADJACENT PROPERTY OWNERS:

12TH ST MARINA

PROPOSED BOAT LAUNCH SECTIONS

SCALE AS NOTED

PORT OF EVERETT
2911 BOND STREET
EVERETT, WA. 98201

PROPOSED: FUEL DOCK AREA & CHANNEL RENOVATION.
12TH ST BASIN DEVELOPMENT

IN: SNOHOMISH RIVER CHANNEL

AT: EVERETT, WA.
SEC 18, T29N, R5E

APPLICATION BY:
PORT OF EVERETT
(425) 388-0715

SHEET 10 **of** 22 **DATE:** AUG. 2003

Drawings\2002\02455-12TH STREET MARINA\PERMIT 8-21-2003\02455.03-19.dwg

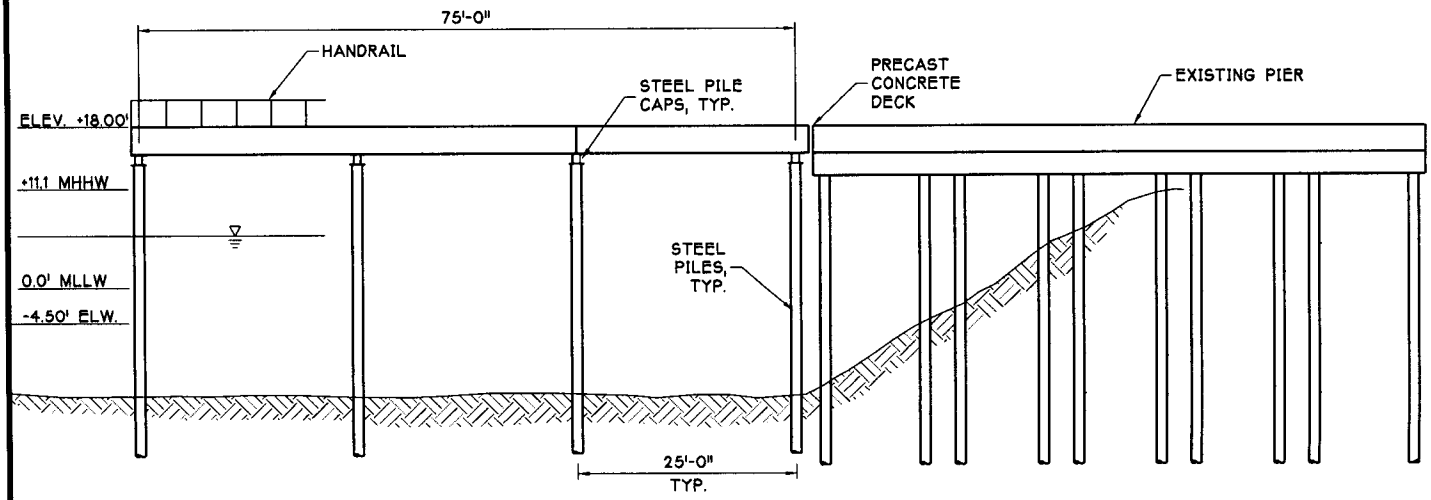

SECTION D-D

BOARDING FLOAT NOT SHOWN

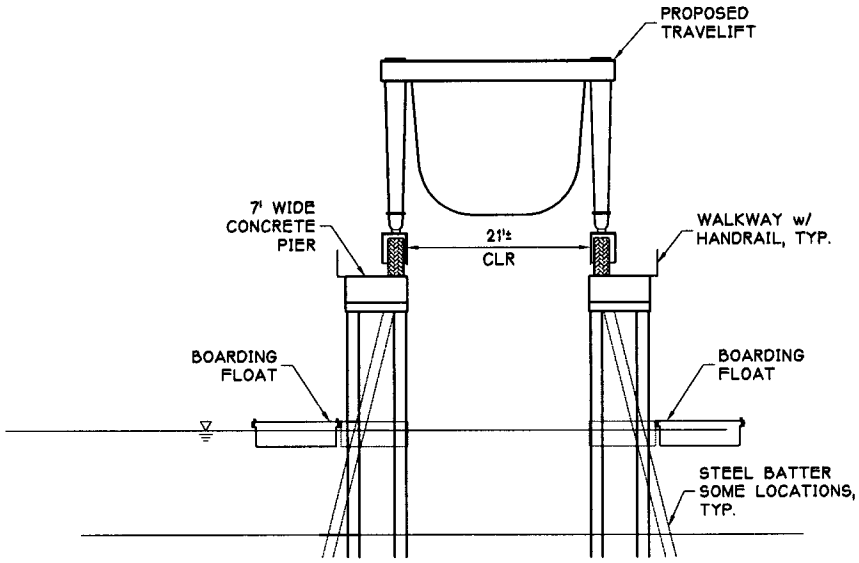

SECTION

#200301007

PURPOSE: MAINTENANCE, REPAIR & DEVELOPMENT

DATUM: 0.0' M.L.L.W.

ADJACENT PROPERTY OWNERS:

12TH ST MARINA

PROPOSED TRAVELIFT

PORT OF EVERETT
2911 BOND STREET
EVERETT, WA. 98201

PROPOSED: FUEL DOCK AREA & CHANNEL RENOVATION. 12TH ST BASIN DEVELOPMENT

IN: SNOHOMISH RIVER CHANNEL

AT: EVERETT, WA.
SEC 18, T29N, R5E

APPLICATION BY:
PORT OF EVERETT
(425) 388-0715

SHEET 11 **of** 22 **DATE:** AUG. 2003

Drawings\2002\02455-12TH STREET MARINA\PERMIT 8-21-2003\02455.03-21.dwg

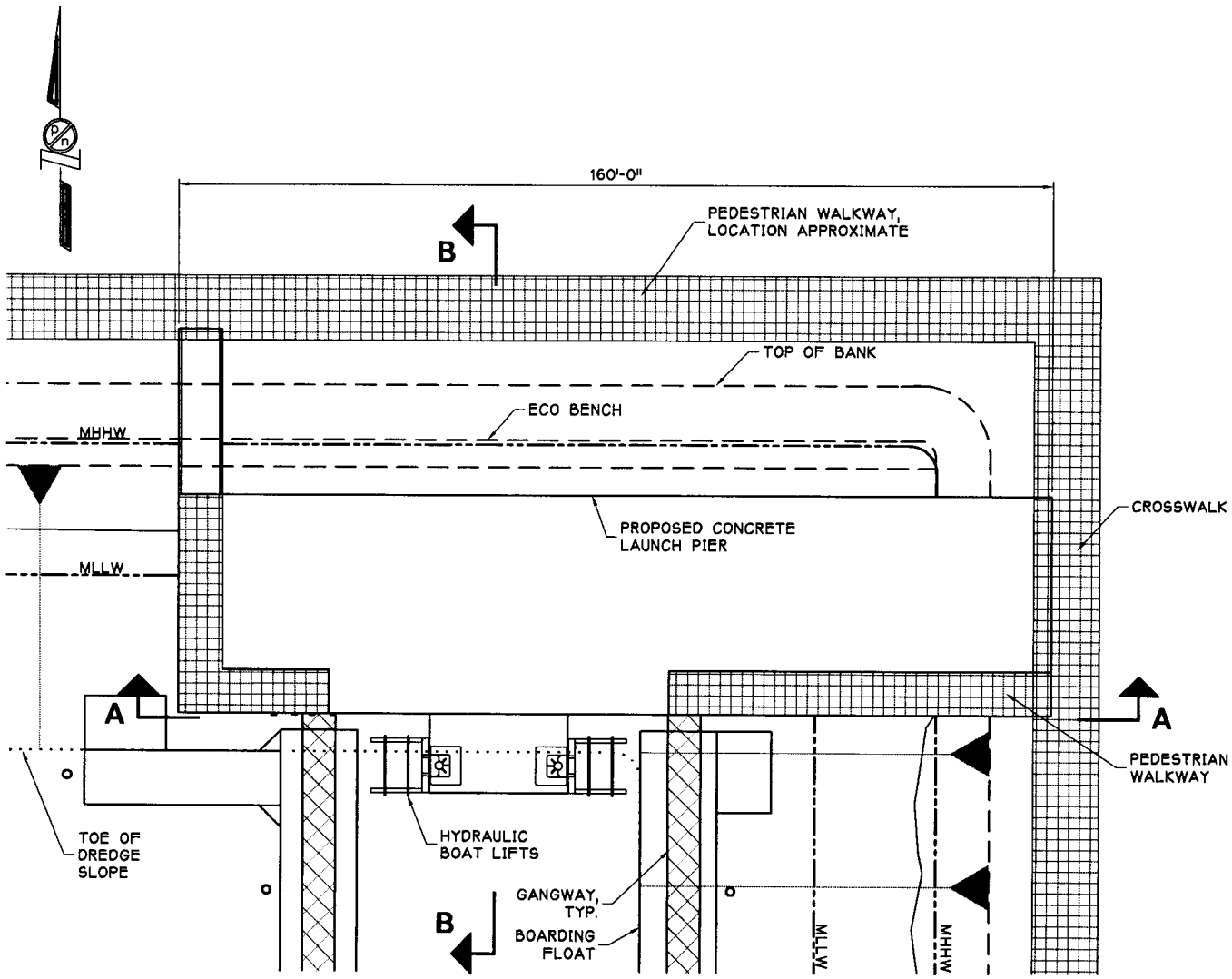

PLAN

0 5 10 15 30 45 FT.

#200301007

PURPOSE:
MAINTENANCE, REPAIR & DEVELOPMENT

DATUM: 0.0' M.L.L.W.

ADJACENT PROPERTY OWNERS:

12TH ST MARINA

PROPOSED LAUNCH PIER

SCALE AS NOTED

PORT OF EVERETT
2911 BOND STREET
EVERETT, WA. 98201

PROPOSED: FUEL DOCK AREA & CHANNEL RENOVATION.
12TH ST BASIN DEVELOPMENT

IN: SNOHOMISH RIVER CHANNEL
AT: EVERETT, WA.
SEC 18, T29N, R5E

APPLICATION BY:
PORT OF EVERETT
(425) 388-0715

SHEET 12 **of** 22 **DATE:** AUG. 2003

Drawings\2002\02455-12TH STREET MARINA\PERMIT 8-21-2003\02455.03-22.dwg

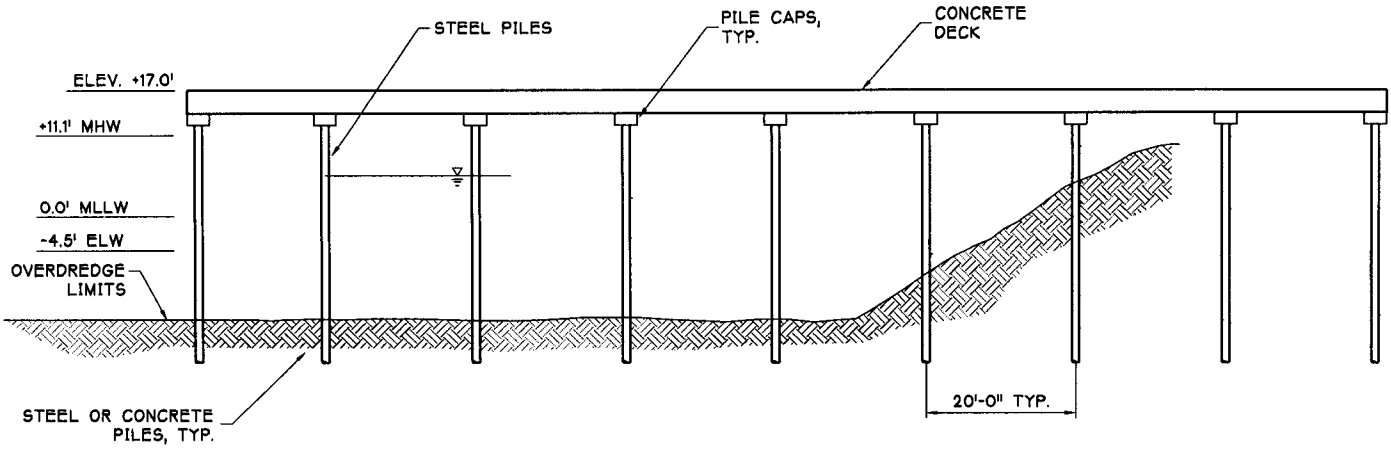

SECTION A-A

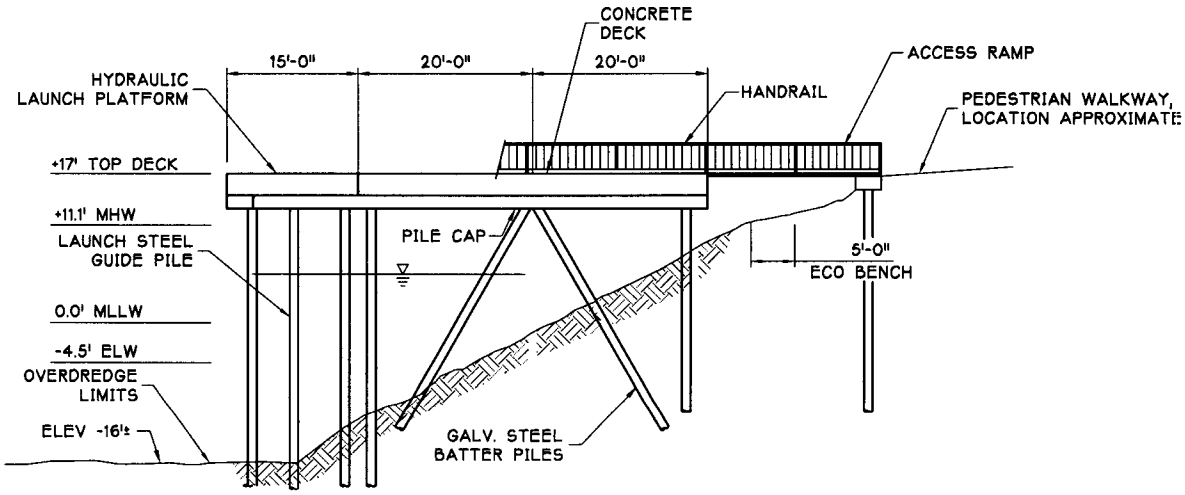

SECTION B-B

#200301007

PURPOSE: MAINTENANCE, REPAIR & DEVELOPMENT

DATUM: 0.0' M.L.L.W.

ADJACENT PROPERTY OWNERS:

12TH ST MARINA

PROPOSED LAUNCH PIER

PORT OF EVERETT
2911 BOND STREET
EVERETT, WA. 98201

PROPOSED: FUEL DOCK AREA & CHANNEL RENOVATION.
12TH ST BASIN DEVELOPMENT

IN: SNOHOMISH RIVER CHANNEL

AT: EVERETT, WA.
SEC 18, T29N, R5E

APPLICATION BY:
PORT OF EVERETT
(425) 388-0715

SHEET 13 **of** 22 **DATE:** AUG. 2003

Drawings\2002\02455-12TH STREET MARINA\PERMIT 8-21-2003\02455.03-23.dwg

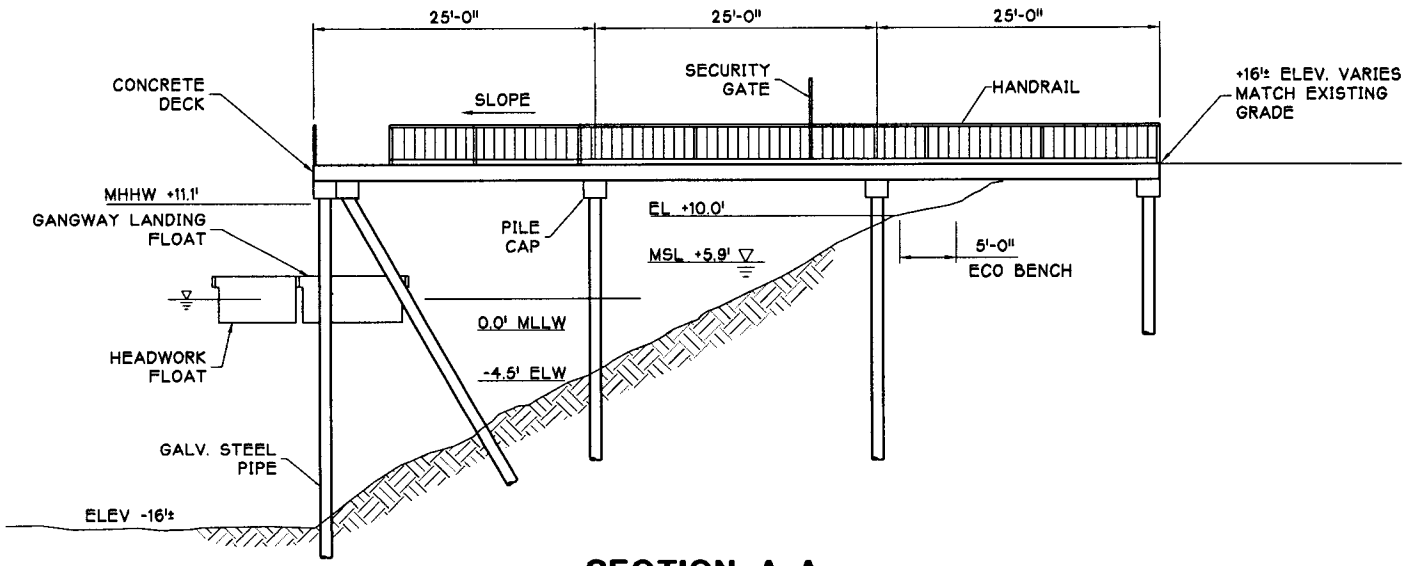

SECTION A-A

0 2 4 8 16 24 FT.

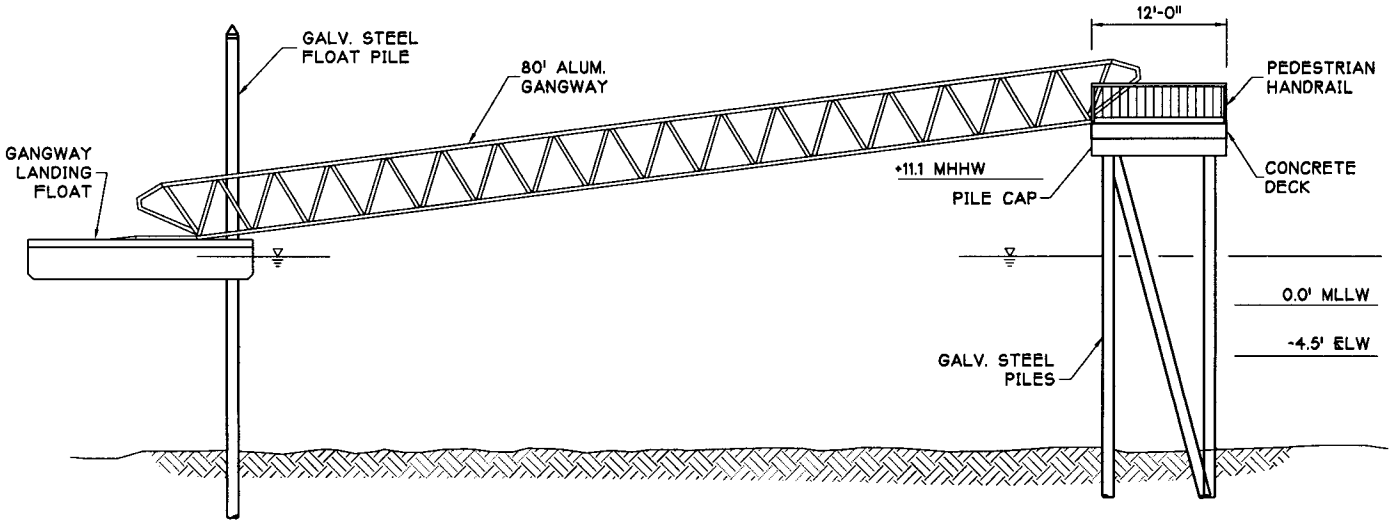

SECTION B-B

0 2 4 8 16 24 FT.

#200301007

PURPOSE: MAINTENANCE, REPAIR & DEVELOPMENT

DATUM: 0.0' M.L.L.W.

ADJACENT PROPERTY OWNERS:

12TH ST MARINA

PROPOSED APPROACH PIERS AND SECTIONS

SCALE AS NOTED

PORT OF EVERETT
2911 BOND STREET
EVERETT, WA. 98201

PROPOSED: FUEL DOCK AREA & CHANNEL RENOVATION. 12TH ST BASIN DEVELOPMENT

IN: SNOHOMISH RIVER CHANNEL

AT: EVERETT, WA.
SEC 18, T29N, R5E

APPLICATION BY:
PORT OF EVERETT
(425) 388-0715

SHEET 14of22 **DATE:** AUG. 2003

Drawings\2002\02455-12TH STREET MARINA\PERMIT 8-21-2003\02455.03-24.dwg

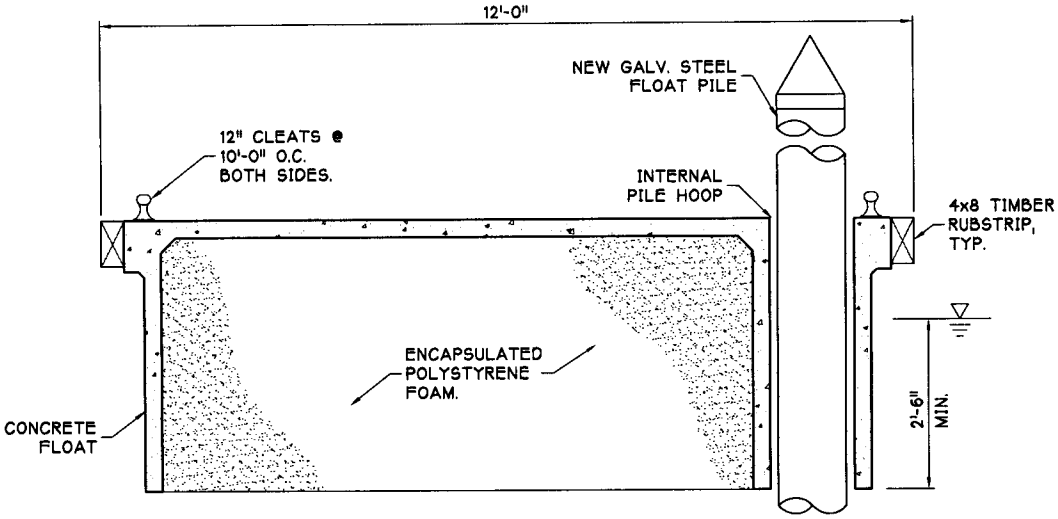

BREAKWATER FLOAT SECTION

SCALE: 3/8" = 1'-0"

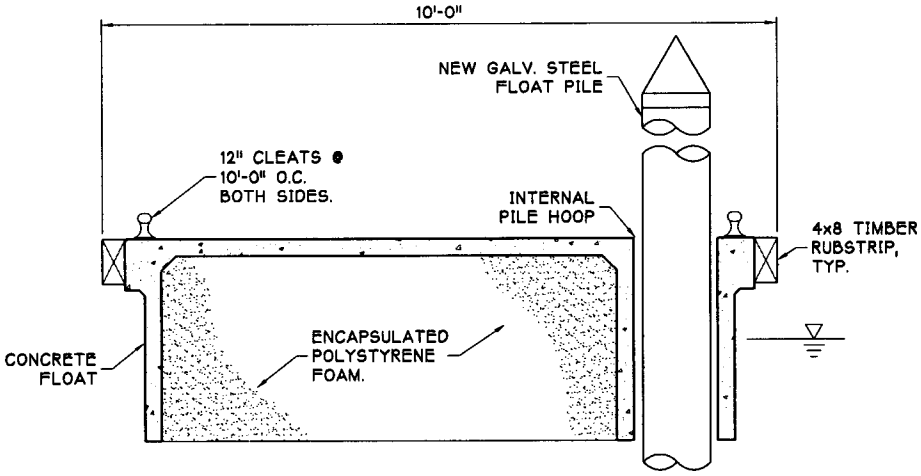

CONCRETE FLOAT w/ INTERNAL PILE HOOP

SCALE: 3/8" = 1'-0"

#20030100 7

PURPOSE: MAINTENANCE, REPAIR & DEVELOPMENT

DATUM: 0.0' M.L.L.W.

ADJACENT PROPERTY OWNERS:

12TH ST MARINA

PROPOSED FLOAT SECTIONS

SCALE AS NOTED

PORT OF EVERETT
2911 BOND STREET
EVERETT, WA. 98201

PROPOSED: FUEL DOCK AREA & CHANNEL RENOVATION. 12TH ST BASIN DEVELOPMENT

IN: SNOHOMISH RIVER CHANNEL

AT: EVERETT, WA.
SEC 18, T29N, R5E

APPLICATION BY:
PORT OF EVERETT
(425) 388-0715

SHEET 15 of 22 **DATE:** AUG. 2003

Drawings\2002\02455-12TH STREET MARINA\PERMIT 8-21-2003\02455.03-25.dwg

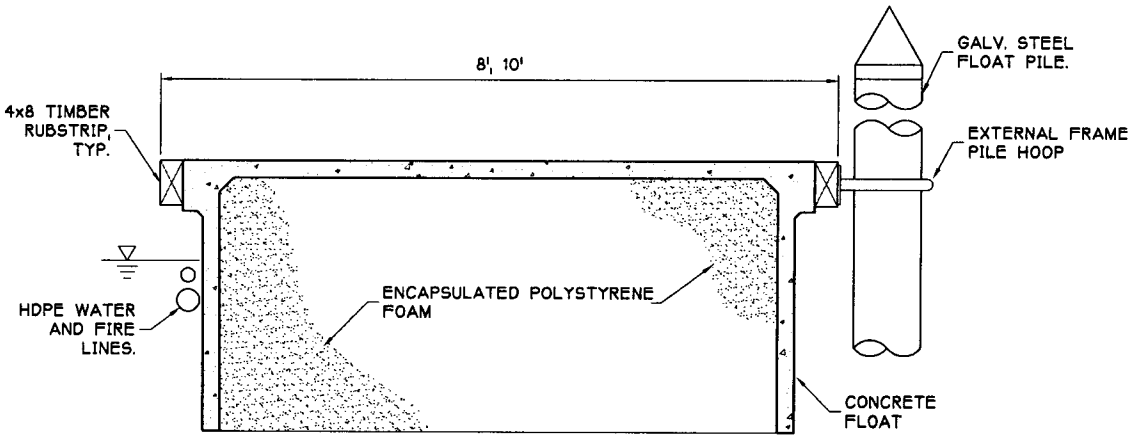

CONCRETE MAINWALK w/ EXTERNAL PILE HOOPS

SCALE: 3/8" = 1'-0"

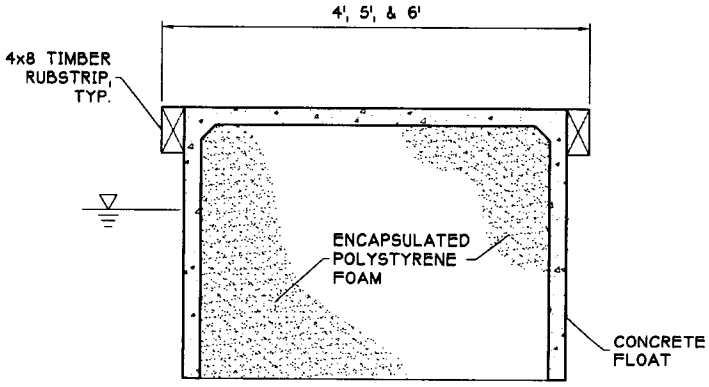

CONCRETE MAINWALK EXTENSIONS SOUTH MARINA

SCALE: 3/8" = 1'-0"

#200301007

PURPOSE: MAINTENANCE, REPAIR & DEVELOPMENT

DATUM: 0.0' M.L.L.W.

ADJACENT PROPERTY OWNERS:
1)
2)

12TH ST MARINA

PROPOSED FLOAT SECTIONS

SCALE AS NOTED

PORT OF EVERETT
2911 BOND STREET
EVERETT, WA. 98201

PROPOSED: FUEL DOCK AREA & CHANNEL RENOVATION. 12TH ST BASIN DEVELOPMENT

IN: SNOHOMISH RIVER CHANNEL

AT: EVERETT, WA.
SEC 18, T29N, R5E

APPLICATION BY:
PORT OF EVERETT
(425) 388-0715

SHEET 16 of 22 **DATE:** AUG. 2003

Drawings\2002\02455-12TH STREET MARINA\PERMIT 8-21-2003\02455.03-26.dwg

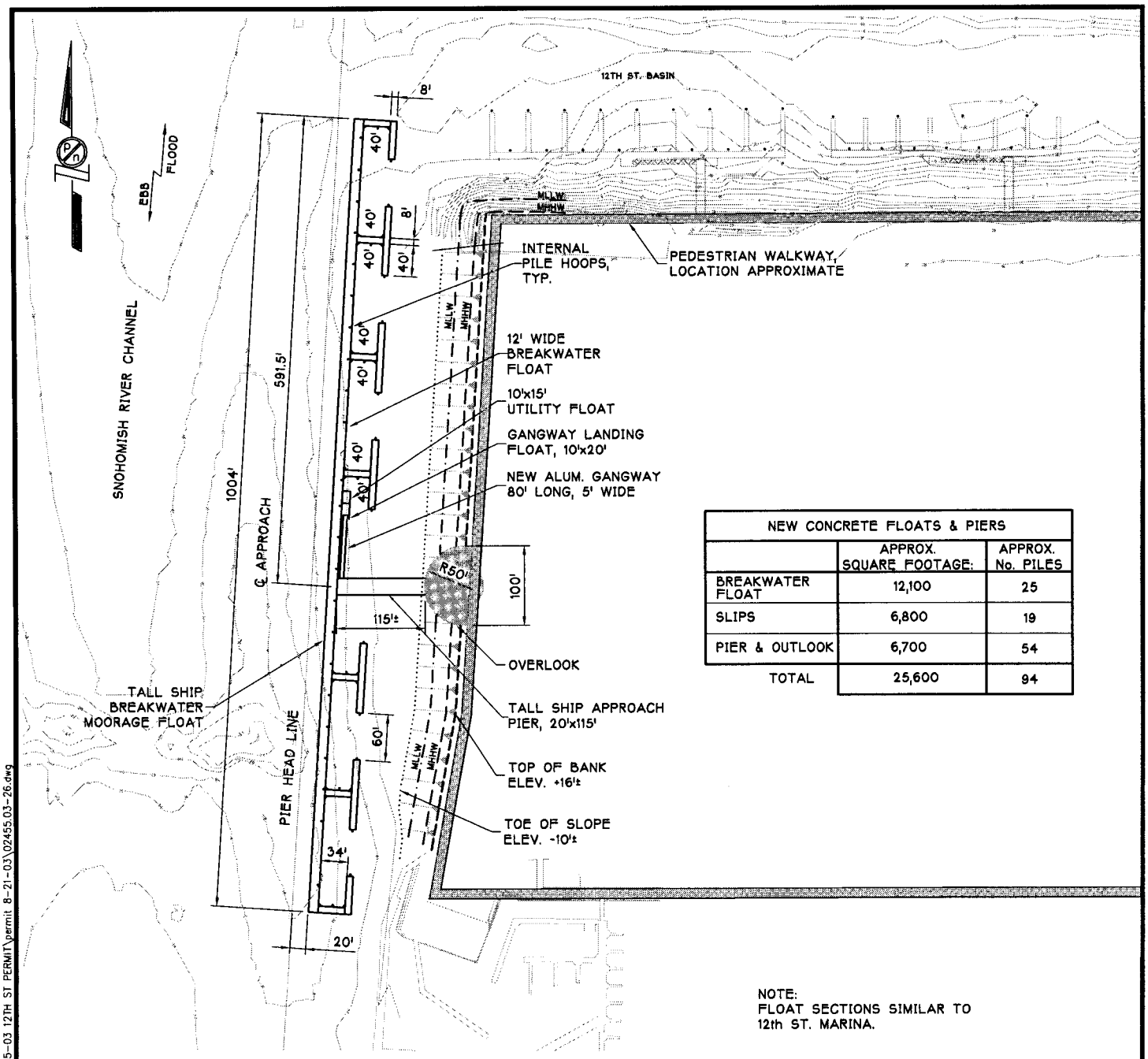

NEW CONCRETE FLOATS & PIERS		
	APPROX. SQUARE FOOTAGE:	APPROX. No. PILES
BREAKWATER FLOAT	12,100	25
SLIPS	6,800	19
PIER & OUTLOOK	6,700	54
TOTAL	25,600	94

NOTE:
FLOAT SECTIONS SIMILAR TO 12th ST. MARINA.

PLAN

0 40 80 160 240 FT.

#200301007

PURPOSE: MAINTENANCE, REPAIR & DEVELOPMENT

DATUM: 0.0' M.L.L.W.

ADJACENT PROPERTY OWNERS:

12TH ST MARINA

TALL SHIP AREA PROPOSED PLAN

SCALE AS NOTED

PORT OF EVERETT
2911 BOND STREET
EVERETT, WA. 98201

PROPOSED: FUEL DOCK AREA & CHANNEL RENOVATION.
12TH ST BASIN DEVELOPMENT

IN: SNOHOMISH RIVER CHANNEL

AT: EVERETT, WA.
SEC 18, T29N, R5E

APPLICATION BY:
PORT OF EVERETT
(425) 388-0715

SHEET 17of22 **DATE:** AUG 2003

Drawings\2002\02455-12TH STREET MARINA\02455-03 PERMITTING\02455-03 12TH ST PERMIT\permit 8-21-03\02455.03-26.dwg

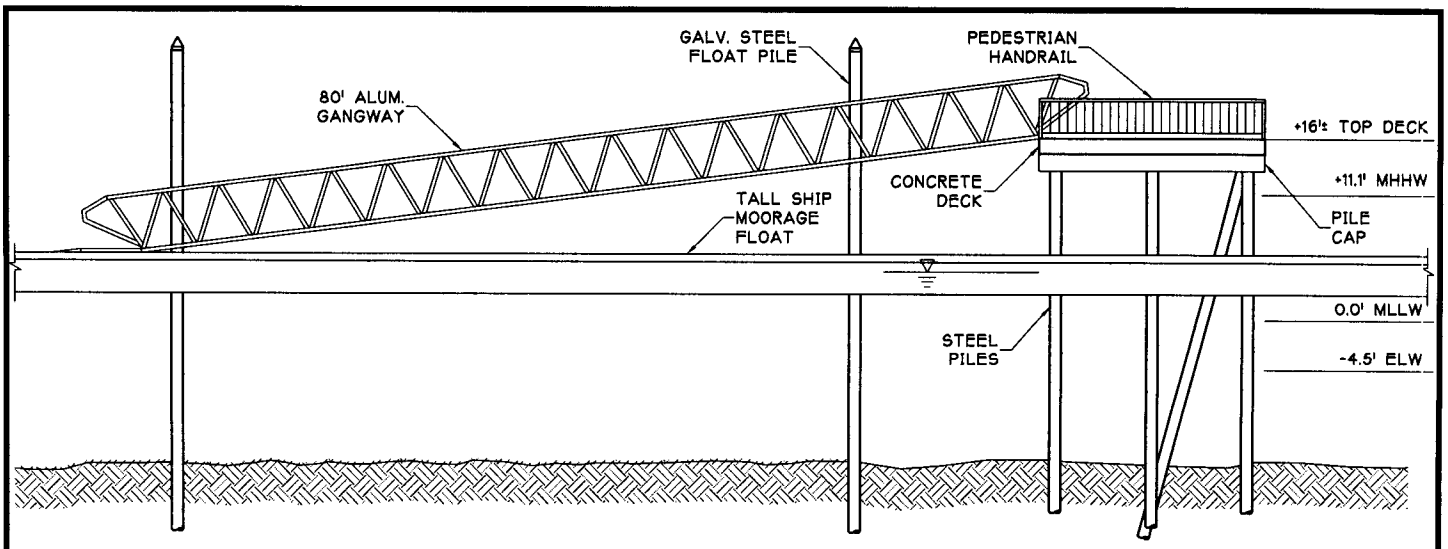

TALL SHIP MOORAGE-ELEVATION

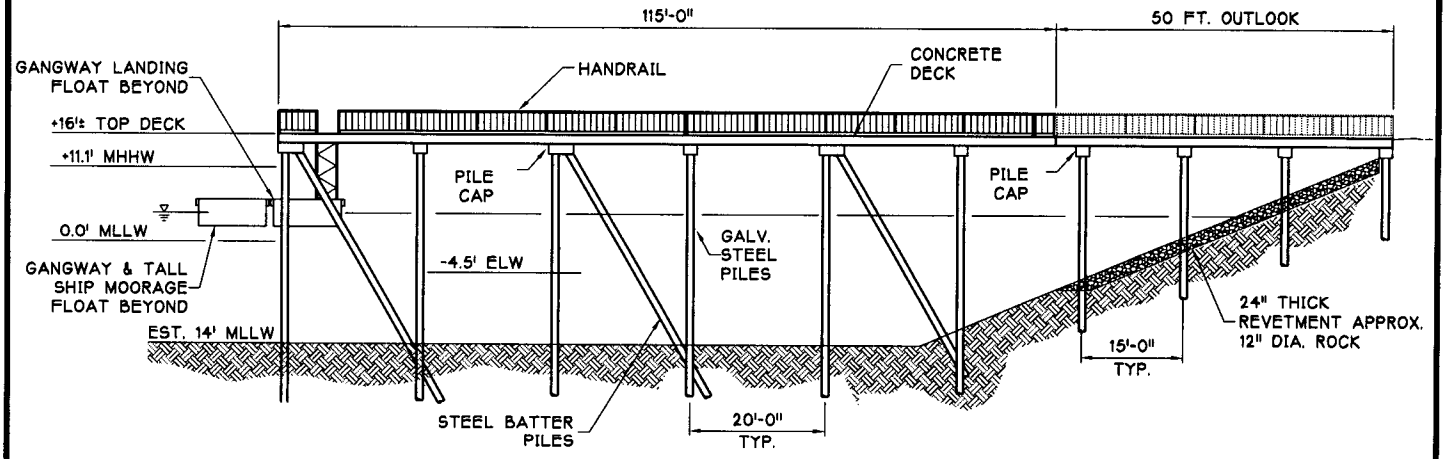

TALL SHIP MOORAGE-ELEVATION

#200301007

PURPOSE: MAINTENANCE, REPAIR & DEVELOPMENT

DATUM: 0.0' M.L.L.W.

ADJACENT PROPERTY OWNERS:

12TH ST MARINA

TALL SHIP AREA PROPOSED SECTIONS

SCALE: NONE

PORT OF EVERETT
2911 BOND STREET
EVERETT, WA. 98201

PROPOSED: FUEL DOCK AREA & CHANNEL RENOVATION. 12TH ST BASIN DEVELOPMENT

IN: SNOHOMISH RIVER CHANNEL

AT: EVERETT, WA.
SEC 18, T29N, R5E

APPLICATION BY:
PORT OF EVERETT
(425) 388-0715

SHEET 18of22 **DATE:** AUG. 2003

Drawings\2002\02455-12TH STREET MARINA\PERMIT 8-21-2003\02455.03-28.dwg

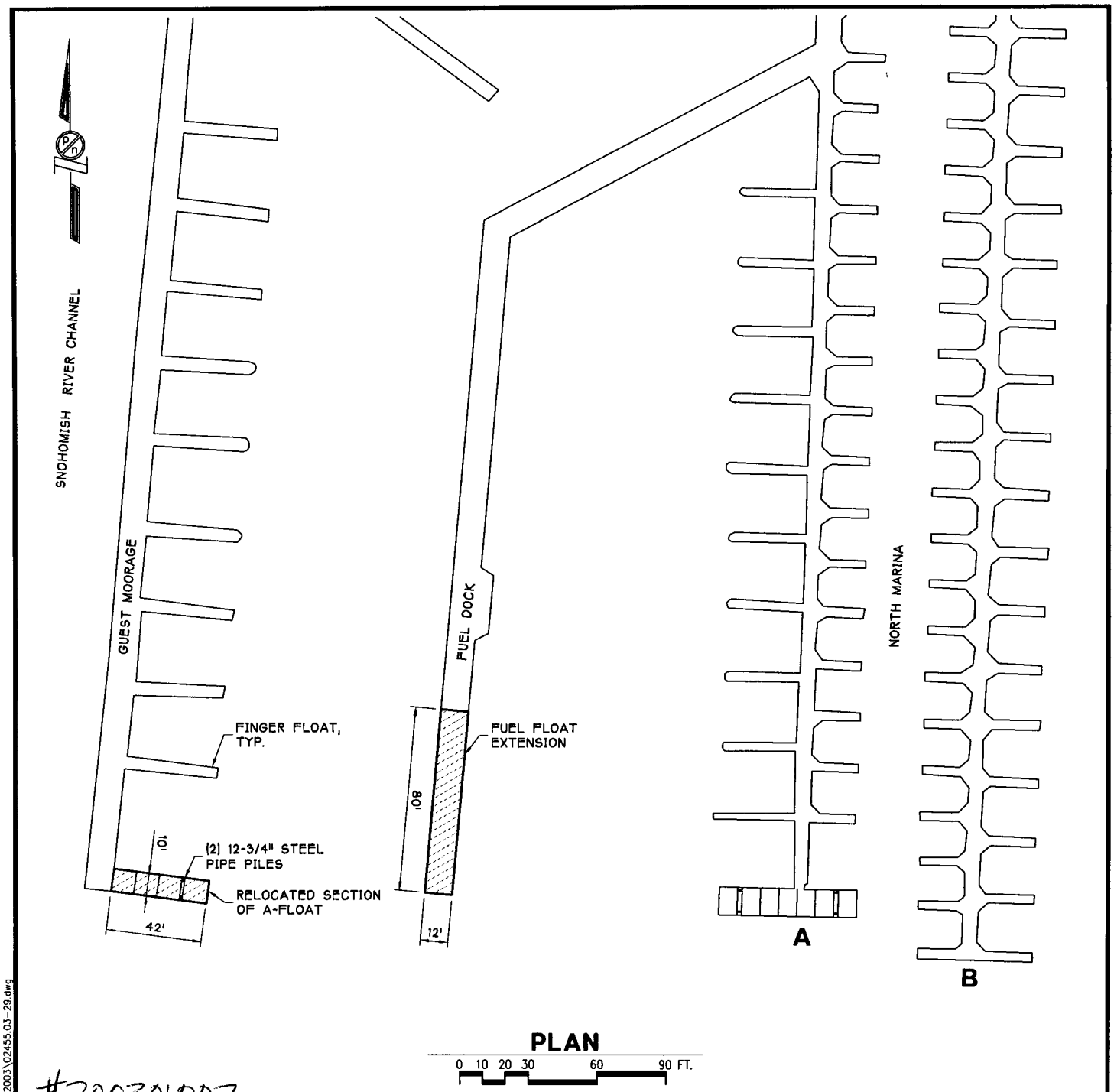

#200301007

PURPOSE: MAINTENANCE, REPAIR & DEVELOPMENT

DATUM: 0.0' M.L.L.W.

ADJACENT PROPERTY OWNERS:

12TH ST MARINA

FUEL FLOAT EXTENSION PROPOSED PLAN

SCALE AS NOTED

PORT OF EVERETT
2911 BOND STREET
EVERETT, WA. 98201

PROPOSED: FUEL DOCK AREA & CHANNEL RENOVATION. 12TH ST BASIN DEVELOPMENT

IN: SNOHOMISH RIVER CHANNEL

AT: EVERETT, WA.

SEC 18, T29N, R5E

APPLICATION BY:

PORT OF EVERETT
(425) 388-0715

SHEET 19 of 22 **DATE:** AUG. 2003

Drawings\2002\02455-12TH STREET MARINA\PERMIT 8-21-2003\02455.03-29.dwg

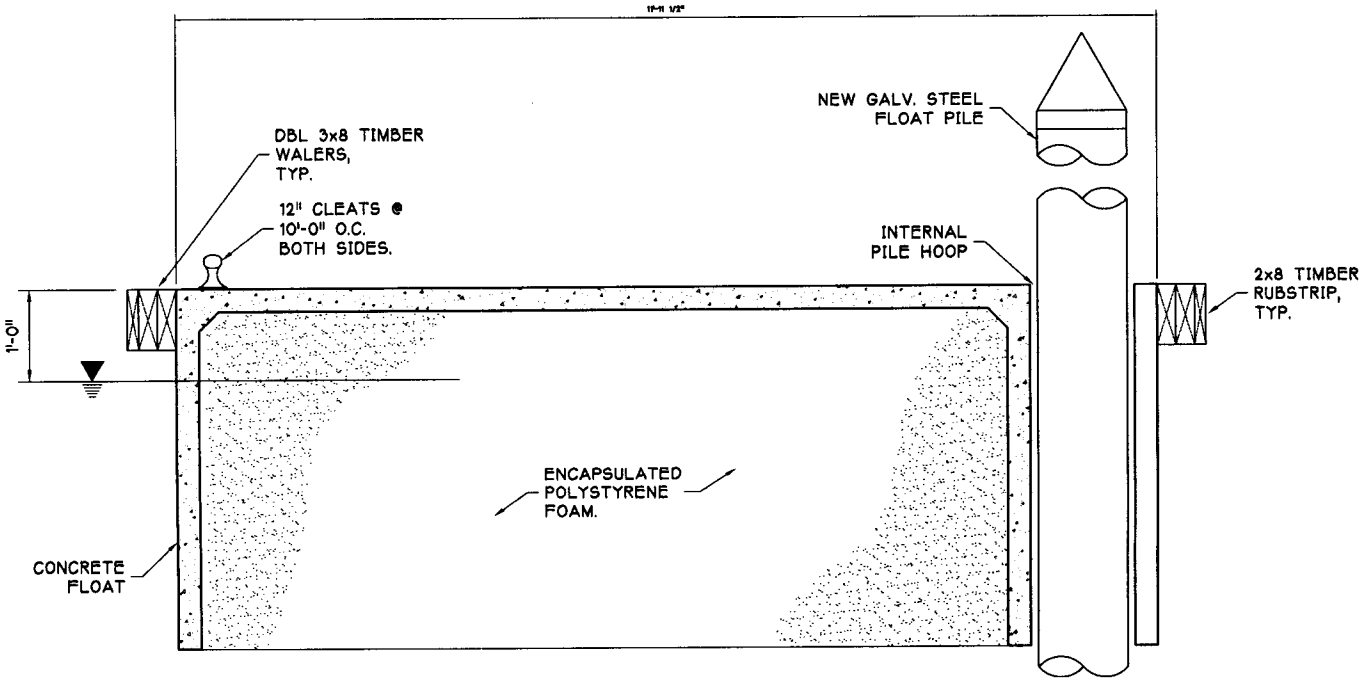

RELOCATED FINGER FLOAT SECTION

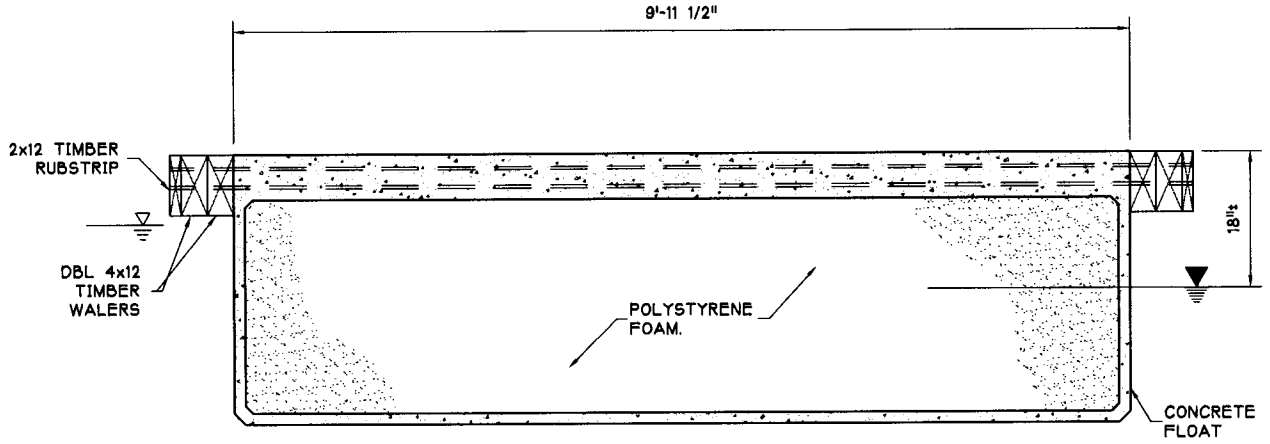

FUEL FLOAT EXTENSION SECTION

#200301007

PURPOSE: MAINTENANCE, REPAIR & DEVELOPMENT

DATUM: 0.0' M.L.L.W.

ADJACENT PROPERTY OWNERS:

12TH ST MARINA

PROPOSED FUEL DOCK SECTIONS

SCALE: NONE

PORT OF EVERETT
2911 BOND STREET
EVERETT, WA. 98201

PROPOSED: FUEL DOCK AREA & CHANNEL RENOVATION. 12TH ST BASIN DEVELOPMENT

IN: SNOHOMISH RIVER CHANNEL

AT: EVERETT, WA.

SEC 18, T29N, R5E

APPLICATION BY:

PORT OF EVERETT
(425) 388-0715

SHEET 20of22 **DATE:** AUG. 2003

Drawings\2002\02455-12TH STREET MARINA\PERMIT 8-21-2003\02455.03-30.dwg

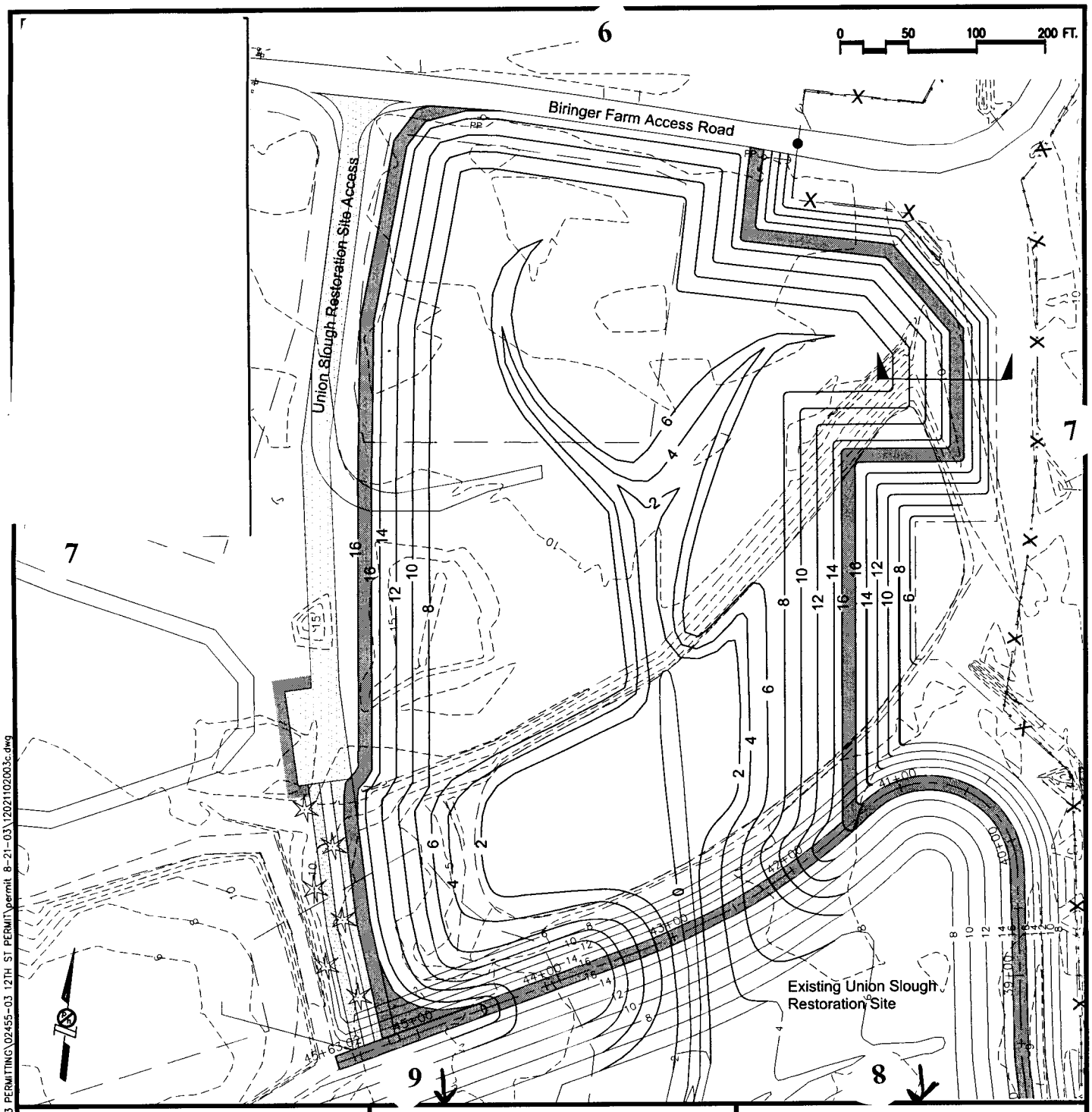

PURPOSE:
MAINTENANCE, REPAIR & DEVELOPMENT

#200301097

DATUM: 0.0' M.L.L.W.

ADJACENT PROPERTY OWNERS:
1) WASHINGTON DOT
2) PORT OF EVERETT

UNION SLOUGH RESTORATION SITE EXPANSION AREA

PROJECT SITE PLAN

SCALE AS NOTED

PORT OF EVERETT
2911 BOND STREET
EVERETT, WA. 98201

ADJACENT TO: UNION SLOUGH CHANNEL

AT: EVERETT, WA.
SEC 4, T29N, R5E

APPLICATION BY:
PORT OF EVERETT
(425) 388-0715

SHEET 21of22 **DATE:** AUG. 2003

drawings\2002\02455-12TH STREET MARINA\02455-03 PERMITTING\02455-03 12TH ST PERMIT\permit 8-21-03\12021102003c.dwg

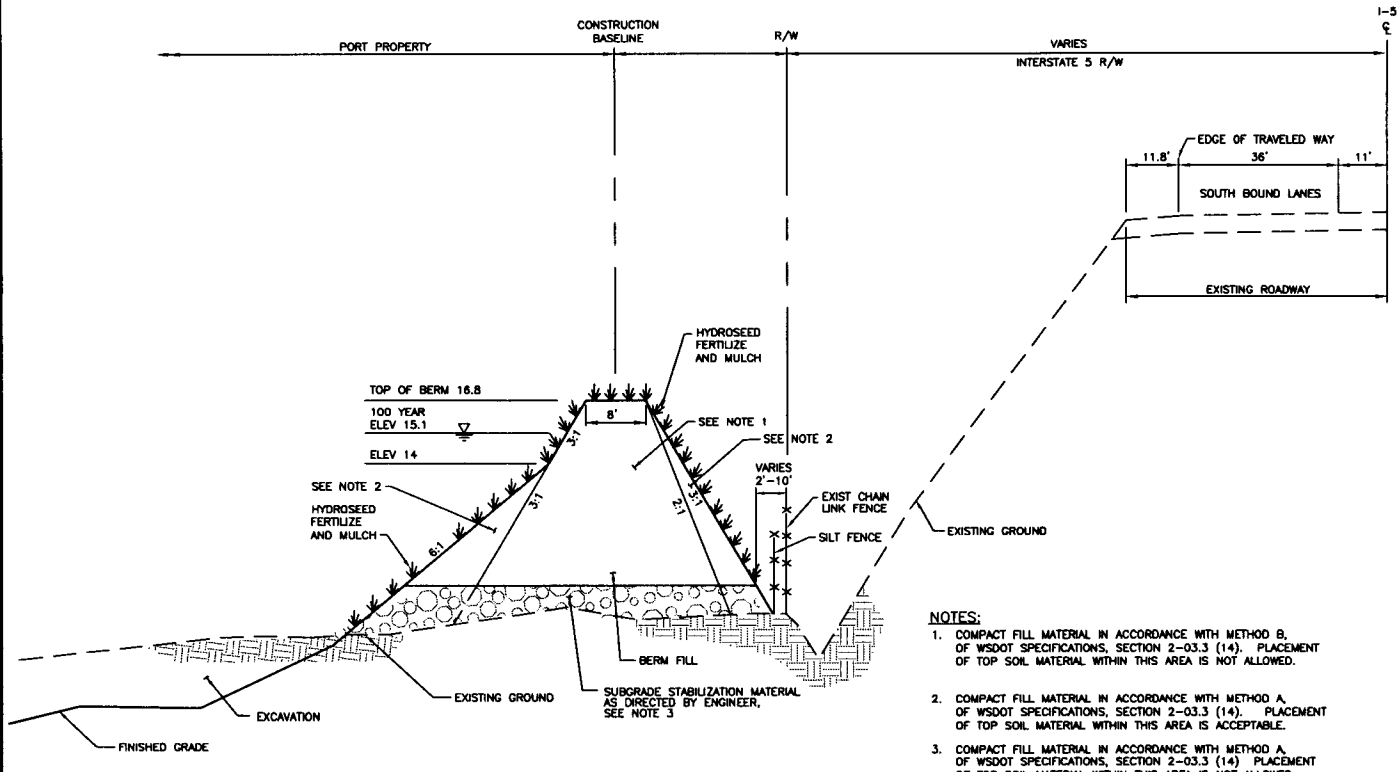

NOTES:

1. COMPACT FILL MATERIAL IN ACCORDANCE WITH METHOD B, OF WSDOT SPECIFICATIONS, SECTION 2-03.3 (14). PLACEMENT OF TOP SOIL MATERIAL WITHIN THIS AREA IS NOT ALLOWED.
2. COMPACT FILL MATERIAL IN ACCORDANCE WITH METHOD A, OF WSDOT SPECIFICATIONS, SECTION 2-03.3 (14). PLACEMENT OF TOP SOIL MATERIAL WITHIN THIS AREA IS ACCEPTABLE.
3. COMPACT FILL MATERIAL IN ACCORDANCE WITH METHOD A, OF WSDOT SPECIFICATIONS, SECTION 2-03.3 (14) PLACEMENT OF TOP SOIL MATERIAL WITHIN THIS AREA IS NOT ALLOWED.

NOT TO SCALE

H200301007

PURPOSE:
MAINTENANCE, REPAIR & DEVELOPMENT

DATUM: 0.0' M.L.L.W.

ADJACENT PROPERTY OWNERS:
1) WASHINGTON DOT
2) PORT OF EVERETT

UNION SLOUGH RESTORATION SITE EXPANSION AREA

TYPICAL BERM CROSS SECTION

SCALE AS NOTED

PORT OF EVERETT
2911 BOND STREET
EVERETT, WA. 98201

ADJACENT TO: UNION SLOUGH CHANNEL

AT: EVERETT, WA.
SEC 4, T29N, R5E

APPLICATION BY:
PORT OF EVERETT
(425) 388-0715

SHEET 22of22 **DATE:** AUG. 2003

drawings\2002\02455-12TH STREET MARINA\02455-03 PERMITTING\02455-03 12TH ST PERMIT\permit 8-21-03\1202110200 4.DWG

STATE OF WASHINGTON
DEPARTMENT OF ECOLOGY
P.O. Box 47600 • Olympia, Washington 98504-7600
(360) 407-6000 • TDD Only (Hearing Impaired) (360) 407-6006

STATE OF WASHINGTON
DEPARTMENT OF ECOLOGY

Notice of Application for
Water Quality Certification
and for
Certification of Consistency with the
Washington Coastal Zone Management Program

Date: June 3, 2004

Notice is herby given that a request has been filed with the Department of Ecology, pursuant to the requirements of Section 401 of the federal Clean Water Act of 1977 (PL 95-217), to certify that the project described in the U.S. Army Corps of Engineers Public Notice No. 200301007 will comply with the Sections 301, 302, 303, 306, and 307 of the Act, and with applicable provisions of State and Federal water pollution control laws.

Notice is herby given that a request has been filed with the Department of Ecology, pursuant to the requirements of Section 307© of the Federal Coastal Zone Management Act of 1972 (16 U.S.C. 1451), to certify that the above referenced project will comply with the Washington State Coastal Zone Management Program and that the project will be conducted in a manner consistent with that program.

Any person desiring to present views on the project pertaining to the project on either or both (1) compliance with water pollution control laws or (2) the project's compliance or consistency with the Washington State Coastal Zone Management Program may do so by providing written comments within 30 days of the above publication date to:

Federal Permit Coordinator
Department of Ecology
SEA Program
Post Office Box 47600
Olympia, Washington 98504-7600