US Army Corps
of Engineers
Seattle District

Public Notice of Application for Permit

Regulatory Branch
Post Office Box 3755
Seattle, Washington 98124-3755
Telephone (206) 764-3495
ATTN: Susan Powell, Project Manager

Public Notice Date: July 1, 2004
Expiration Date: August 1, 2004
Reference: 200400614
Name: Nichols Brothers Boat Builders

Interested parties are hereby notified that an application has been received for a Department of the Army (DA) permit in accordance with Section 10 of the Rivers and Harbors Act of March 3, 1899, for certain work described below and shown on the enclosed drawings.

APPLICANT - Nichols Brothers Boat Builders, Inc. (NBBBI)
Post Office Box 580
Freeland, Washington 98249
ATTN: Mr. Bryan Nichols
Telephone: (360) 331-5500

LOCATION – In Holmes Harbor near Freeland, Island County, Washington.

WORK – Install a pre-constructed welded steel marine rail system on an existing gravel boat ramp. The rails will be placed by a mobile rubber-tired crane and bolted together using hand tools. All equipment will operate on the ramp surface. No dredging or placement of fill material will occur as a result of this permit.

PURPOSE – To launch and recover commercial vessels as part of a commercial shipyard business.

ADDITIONAL INFORMATION – On December 27, 2002, the U.S. Army Corps of Engineers (Corps) verified that Nationwide Permit 3, Maintenance, authorized the placement of rock on the existing boat ramp, the dredging of an area at the waterward end of the boat ramp, and soil core sampling (DA permit no. 200200529). This verification expires on December 27, 2004. Due to the presence of eelgrass at the end of the boat ramp, the Washington Department of Fish and Wildlife required that NBBBI permit and implement an alternative launch system by December 31, 2007, at which time dredging would no longer be allowed. NBBBI installed the rail system in 2003 to launch a vessel, without obtaining a DA permit. The placement of the rail system resulted in an enforcement action by the Corps and the rail system was removed. The current proposal is for the temporary re-installation of the rail system until a permanent system is developed, permitted, and operational. It is anticipated that it will take approximately 2.5 years before the permanent system could be in place. If permitted, the permanent rail system will be larger in order to accommodate the larger vessels that NBBBI will be building and launching in the future.

ENDANGERED SPECIES - The Endangered Species Act (ESA) of 1973, as amended, requires assessment of potential impacts to listed and proposed species. The Puget Sound chinook salmon (*Oncorhynchus tshawytscha*), threatened; Coastal/Puget Sound bull trout (*Salvelinus confluentus*), threatened; bald eagle (*Haliaeetus leucocephalus*), threatened; Steller sea lion (*Eumetopias jubatus*), threatened; humpback whale (*Megaptera novaeangliae*), endangered; leatherback sea turtle (*Dermochelys coriacea*), endangered; and marbled murrelet (*Brachyramphus marmoratus*) threatened in the state of Washington, may occur in the proposed project area. For marbled murrelet, critical habitat has been designated. After receipt of comments

from this public notice, the Corps will evaluate the potential impacts to the Chinook salmon, bull trout, bald eagle, Steller sea lion, humpback whale, leatherback sea turtle, and marbled murrelet.

ESSENTIAL FISH HABITAT - The Magnuson-Stevens Fishery Conservation and Management Act (MSA), as amended by the Sustainable Fisheries Act of 1996, requires all Federal agencies to consult with the National Marine Fisheries Service (NMFS) on all actions, or proposed actions, permitted, funded, or undertaken by the agency, that may adversely affect Essential Fish Habitat (EFH). EFH for Pacific salmon, Groundfish, and Coastal Pelagic Species occurs in the project area. The proposed action would impact approximately 24,400 square feet of EFH for these species.

If the Corps determines that the proposed action may adversely affect EFH for federally-managed fisheries in Washington waters, the Corps will initiate EFH consultation with the NMFS. The Corps' final determination relative to project impacts and the need for mitigation measures is subject to review by and coordination with the NMFS.

CULTURAL RESOURCES - The District Engineer has reviewed the latest published version of the National Register of Historic Places, lists of properties determined eligible and other sources of information. The following is current knowledge of the presence or absence of historic properties and the effects of the undertaking upon these properties:

> There are no recorded historic properties within the permit area. The permit area has been so extensively modified by modern development that little likelihood exists for the proposed project to impinge upon an undisturbed historic property.

The District Engineer invites responses to this public notice from Federal, Native American Nations or tribal governments, State, and local agencies, historical and archeological societies, and other parties likely to have knowledge of or concerns with historic properties in the area.

PUBLIC HEARING - Any person may request, in writing, within the comment period specified in this notice, that a public hearing be held to consider this application. Requests for public hearings shall state, with particularity, the reasons for holding a public hearing.

EVALUATION - The decision whether to issue a permit will be based on an evaluation of the probable impact, including cumulative impacts of the proposed activity on the public interest. That decision will reflect the national concern for both protection and utilization of important resources. The benefits which reasonably may be expected to accrue from the proposal must be balanced against its reasonably foreseeable detriments. All factors which may be relevant to the proposal will be considered, including the cumulative effects thereof; among those are conservation, economics, aesthetics, general environmental concerns, wetlands, historic properties, fish and wildlife values, flood hazards, floodplain values, land use, navigation, shoreline erosion and accretion, recreation, water supply and conservation, water quality, energy needs, safety, food and fiber production, mineral needs, considerations of property ownership, and, in general, the needs and welfare of the people.

The Corps is soliciting comments from the public; Federal, Native American Nations or tribal governments, State, and local agencies and officials; and other interested parties in order to consider and evaluate the impacts of this activity. Any comments received will be considered by the Corps to determine whether to issue, modify, condition or deny a permit for the work. To make this decision, comments are used to assess impacts on endangered species, historic properties, water quality, general environmental effects, and the other public interest factors listed above. Comments are used in the preparation of an Environmental Assessment and/or an Environmental Impact Statement pursuant to the National Environmental Policy Act. Comments are

also used to determine the need for a public hearing and to determine the overall public interest of the activity.

ADDITIONAL EVALUATION - The State of Washington is reviewing this work for consistency with the approved Washington Coastal Zone Management Program.

This proposal is the subject of Shorelines Substantial Development Permit No. 182/04, being processed by Island County.

COMMENT AND REVIEW PERIOD – Conventional mail or e-mail comments on this public notice will be accepted and made part of the record and will be considered in determining whether it would be in the public interest to authorize this proposal. In order to be accepted, e-mail comments must originate from the author's e-mail account and must include on the subject line of the e-mail message the permit applicant's name and reference number as shown below. All e-mail comments should be sent to Susan.M.Powell@nws02.usace.army.mil. Conventional mail comments should be sent to U.S. Army Corps of Engineers, Regulatory Branch, P.O. Box 3755, Seattle, Washington, 98124-3755. Both conventional mail or e-mail comments must include the permit applicant's name and reference number, as shown below, and the commentor's name, address, and phone number. All comments whether conventional mail or e-mail must reach this office, no later than the expiration date of this public notice to ensure consideration. Please include the following name and reference number:

Nichols Brothers Boat Builders
200400614

Encl
Drawings (4)

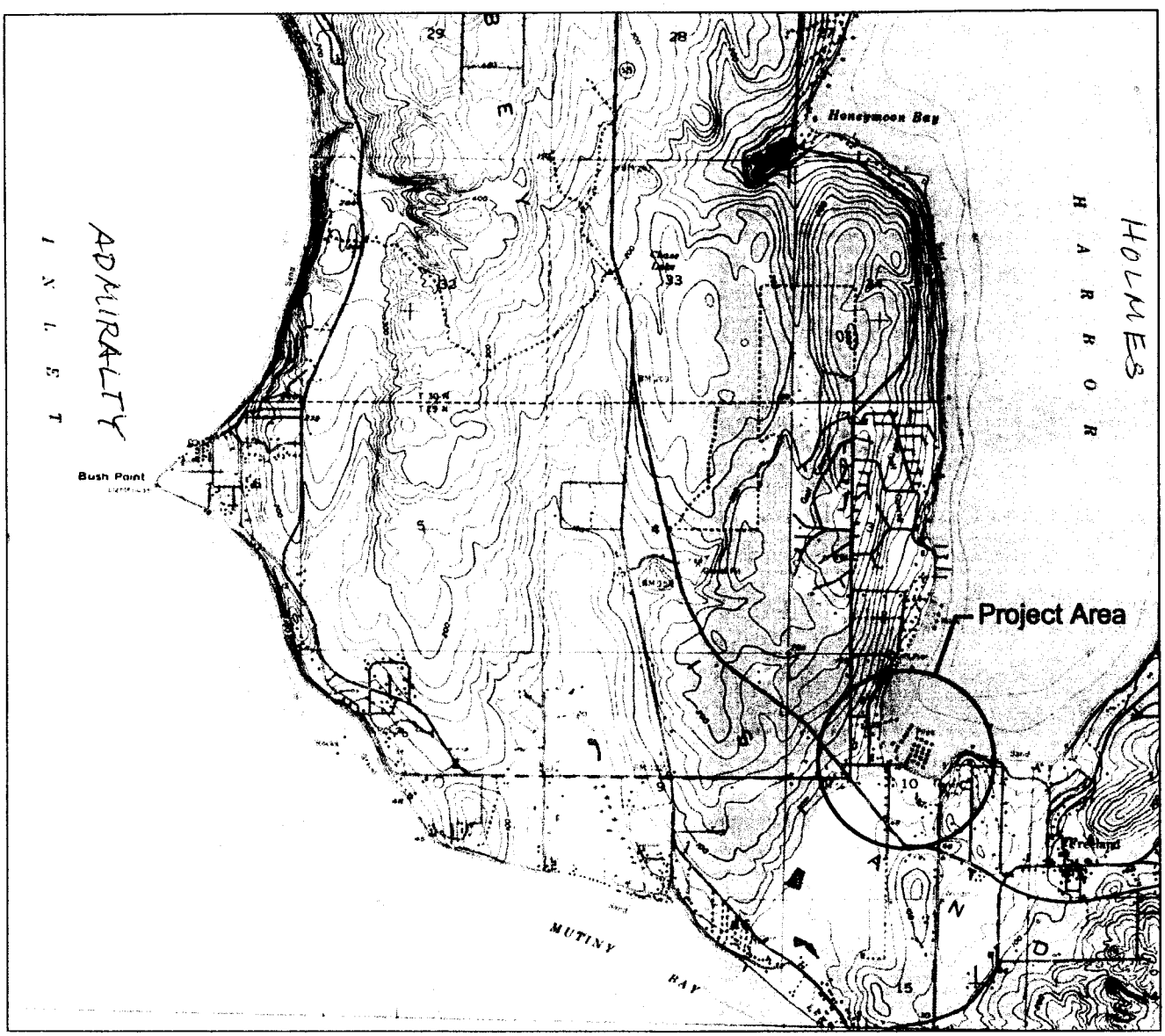

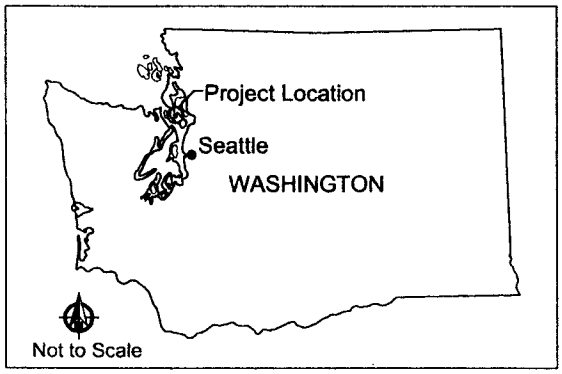

Sec. 10, T. 29N, R 2E
Lat 48°-1'-00"
Long 122°-32'-19.9"

0 3500
Scale in Feet

PURPOSE: To facilitate launching and recovery of vessels.

ADJACENT PROPERTY OWNERS:
Langley Properties, Freeland, WA

NBBBI Marine Rail System

Vicinity Map

FIGURE 1

PROPOSED: Install a marine rail system.

2004000614

IN: Holmes Harbor
AT: Freeland
COUNTY OF: Island STATE: WA
APPLICATION BY: Nichols Brothers
LOCATION ADDRESS: 5400 Cameron Road
Freeland, WA

SHEET 1 OF 4 DATE: 6-15-04

K:\Jobs\030236-NBBBI\03023601\03023601-03.dwg Vicinity Map

May 19, 2004 5:06pm dholmer

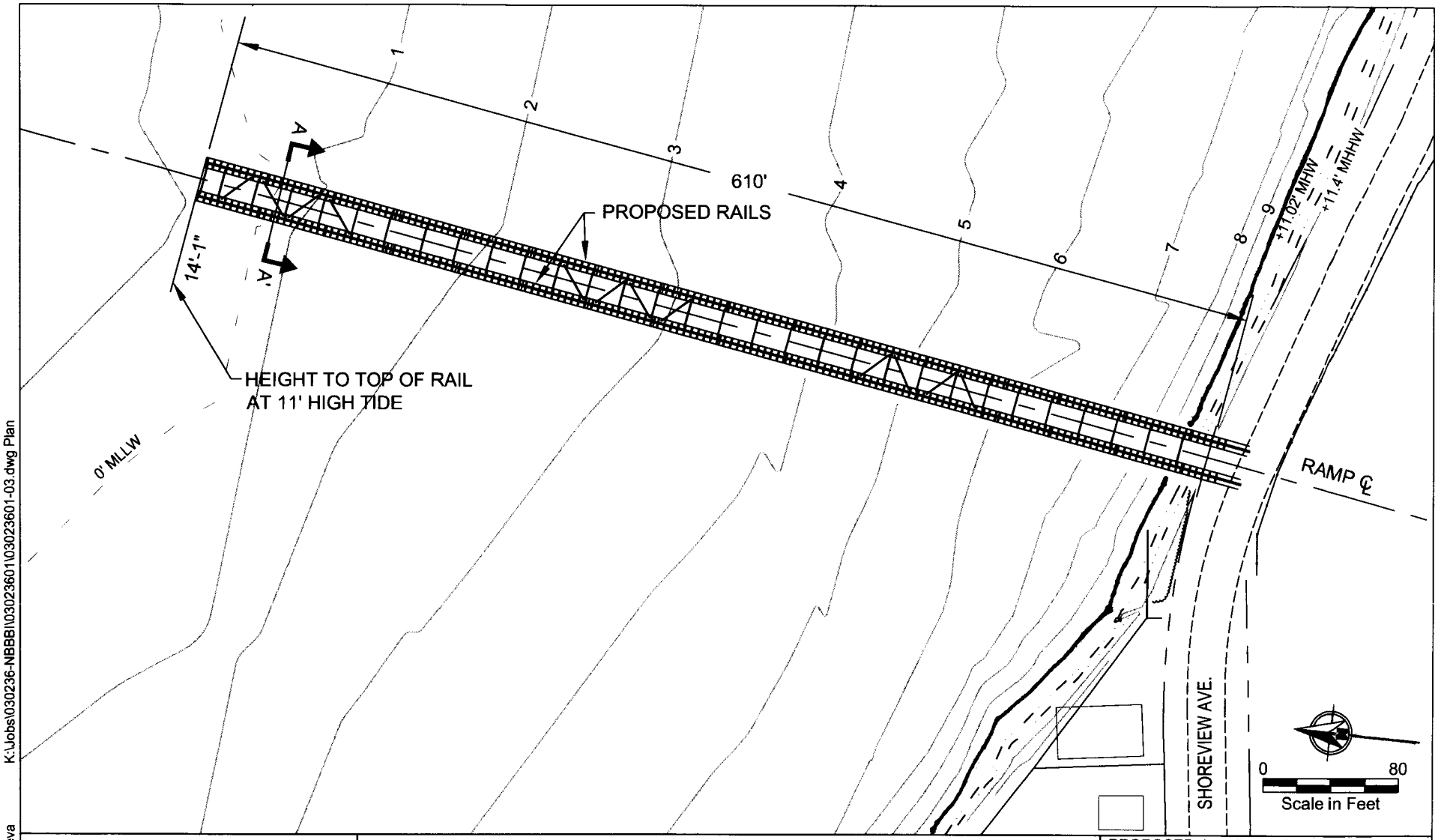

PROPOSED: To facilitate launching and recovery of vessels.

ADJACENT PROPERTY OWNERS:
Langley Properties, Freeland, WA

NBBBI Marine Rail System

Plan View

FIGURE 2 200400614

PROPOSED: Install a marine rail system.

IN: Holmes Harbor
AT: Freeland
COUNTY OF: Island STATE: WA
APPLICATION BY: Nichols Brothers
LOCATION ADDRESS: 5400 Camreon Road
Freeland, WA

SHEET 2 OF 4 DATE: 6/15/04

K:\Jobs\030236-NBBBI\03023601\03023601-03.dwg Plan
Jun 15, 2004 3:57pm sdekleva

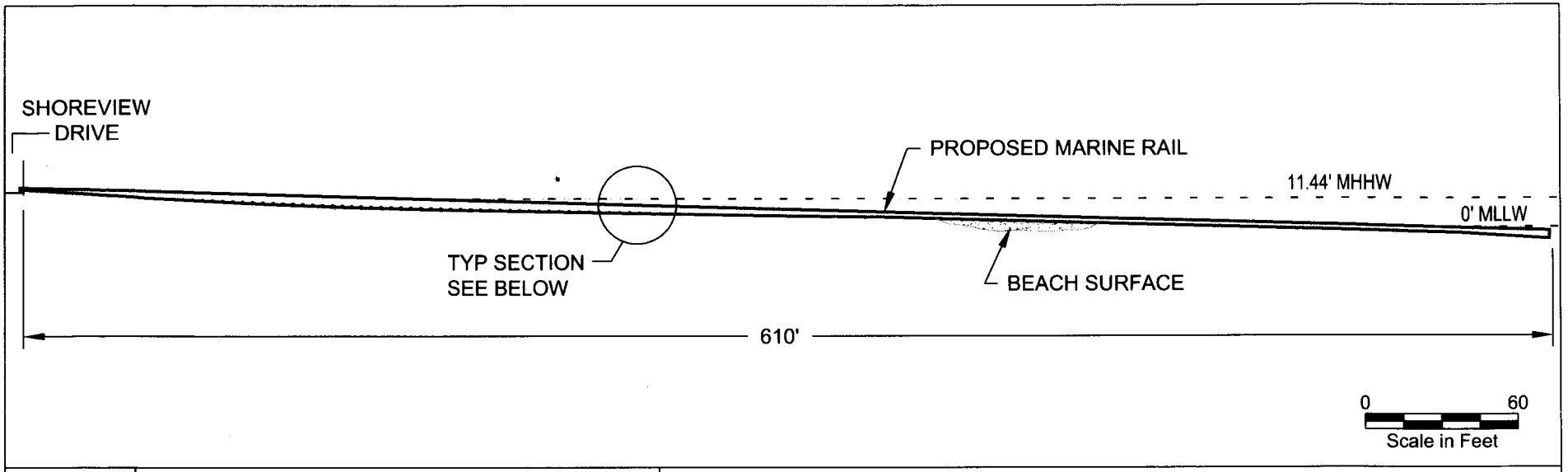

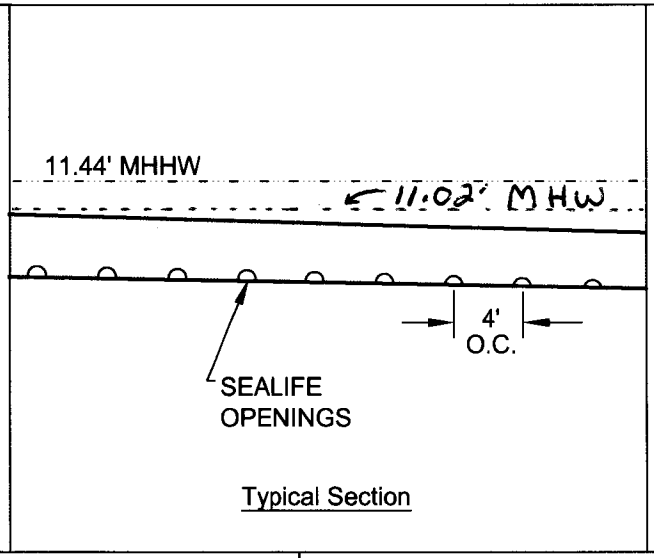

PROPOSED: To facilitate launching and recovery of vessels.

ADJACENT PROPERTY OWNERS:
Langley Properties, Freeland, WA

NBBBI Marine Rail System

Profile of Ramp and Proposed Rail

FIGURE 3 200400614

PROPOSED: Install a marine rail system.

IN: Holmes Harbor
AT: Freeland
COUNTY OF: Island STATE: WA
APPLICATION BY: Nichols Brothers
LOCATION ADDRESS: 5400 Camreon Road
Freeland, WA

SHEET 3 OF 4 DATE: 6/15/04

K:\Jobs\030236-NBBBI\030236\01\03023601-04.dwg Profile

Jun 16, 2004 10:56am sdekleva

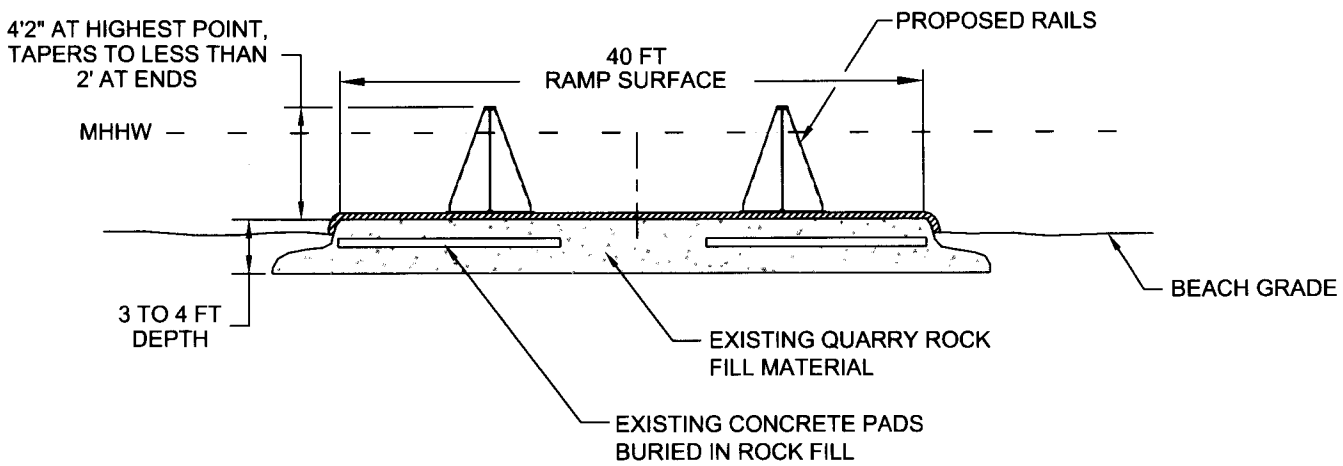

PROPOSED: To facilitate launching and recovery of vessels.

ADJACENT PROPERTY OWNERS:
Langley Properties, Freeland, WA

NBBBI Marine Rail System

Cross Section A-A'

FIGURE 4 200400614

PROPOSED: Install a marine rail system.

IN: Holmes Harbor
AT: Freeland
COUNTY OF: Island STATE: WA
APPLICATION BY: Nichols Brothers
LOCATION ADDRESS: 5400 Camreon Road
Freeland, WA

SHEET 4 OF 4 DATE: 6/15/04

K:\Jobs\030236-NBBBI\03023601\03023601-03.dwg Section
Jun 15, 2004 4:00pm sdekleva

STATE OF WASHINGTON

DEPARTMENT OF ECOLOGY

P.O. Box 47600 • Olympia, Washington 98504-7600
(360) 407-6000 • TDD Only (Hearing Impaired) (360) 407-6006

STATE OF WASHINGTON
DEPARTMENT OF ECOLOGY

Notice of Application for
Certification of Consistency with the
Washington Coastal Zone Management Program

Date: July 1, 2004

Notice is herby given that a request has been filed with the Department of Ecology, pursuant to the requirements of Section 307© of the federal Coastal Zone Management Act of 1972 (16 U.S.C. 1451), to certify that the project described in the U.S. Army Corps of Engineers Public Notice No. 200400614 will comply with the Washington State Coastal Zone Management Program and that the project will be conducted in a manner consistent with that Program.

Any person desiring to present views on the project pertaining to the project's compliance or consistency with the Washington State Coastal Zone Management Program may do so by providing written comments within 30 days of the above publication date to:

Federal Permit Coordinator
Department of Ecology
SEA Program
Post Office Box 47600
Olympia, Washington 98504-7600