US Army Corps
of Engineers
Seattle District

Public Notice of Application for Permit

Regulatory Branch
Post Office Box 3755
Seattle, Washington 98124-3755
Telephone (206) 764-3495
ATTN: Debbie Knaub, Project Manager

Public Notice Date: January 26, 2005
Expiration Date: February 26, 2005
Reference: 200400652
Name: Wapato Point Community Association

Interested parties are hereby notified that all or a portion of the work as described below and shown on the enclosed drawings was performed without specific authorization under Section 10 of the Rivers and Harbors Act of March 3, 1899. U.S. Army Corps of Engineers permit regulations (33 CFR 320-330) dated November 13, 1986, allow District Engineers to make a determination of whether the activity is not contrary to the public interest.

APPLICANT: Wapato Point Community Association
Post Office Box 426
Manson, Washington 98831
ATTN: Mr. Ron Kehl
Telephone: (509) 682-9511

AGENT: Hibbard Architecture and Planning
Post Office Box 499
Manson, Washington 988831
ATTN: Mr. Larry Hibbard
Telephone: (509) 687-3800

LOCATION: In Lake Chelan at Wapato Point, at Manson, Chelan County, Washington.

WORK: Retention of 47 existing mooring buoys; placement of 15 new mooring buoys, and placement of eleven additional no-wake buoys.

PURPOSE: To provide recreational boat moorage and navigational safety.

MITIGATION: None proposed.

ENDANGERED SPECIES: The Endangered Species Act (ESA) of 1973, as amended, requires assessment of potential impacts to listed and proposed species. The Columbia River bull trout, threatened, occurs in the proposed project area. A preliminary determination indicates that the activity may affect, but is not likely to adversely affect threatened species designated under the Endangered Species Act of 1973. Informal consultation under Section 7 of the ESA has been initiated with the U.S. Fish and Wildlife Service.

ESSENTIAL FISH HABITAT: The Magnuson-Stevens Fishery Conservation and Management Act (MSA), as amended by the Sustainable Fisheries Act of 1996, requires all Federal agencies to consult with the National Marine Fisheries Service (NMFS) on all actions, or proposed actions, permitted, funded, or undertaken by the

agency, that may adversely affect Essential Fish Habitat (EFH). EFH does not occur in Lake Chelan; therefore, the U.S. Army Corps of Engineers has determined that the proposed action will not adversely affect designated EFH for federally-managed fisheries in Washington waters. No further EFH consultation is necessary.

CULTURAL RESOURCES: The District Engineer has reviewed the latest published version of the National Register of Historic Places, lists of properties determined eligible and other sources of information. The following is current knowledge of the presence or absence of historic properties and the effects of the undertaking upon these properties: The permit area is likely to yield resources eligible for inclusion in the National Register, however, the proposed work is of such a limited nature and extent that little likelihood exists for the project to impinge upon an unrecorded historic property.

The District Engineer invites responses to this public notice from Native American Nations or tribal governments, Federal, State, and local agencies, historical and archeological societies, and other parties likely to have knowledge of or concerns with historic properties in the area.

PUBLIC HEARING: Any person may request, in writing, within the comment period specified in this notice, that a public hearing be held to consider this application. Requests for public hearings shall state, with particularity, the reasons for holding a public hearing.

EVALUATION: The decision whether to issue a permit will be based on an evaluation of the probable impact, including cumulative impacts of the proposed activity on the public interest. That decision will reflect the national concern for both protection and utilization of important resources. The benefits which reasonably may be expected to accrue from the proposal must be balanced against its reasonably foreseeable detriments. All factors which may be relevant to the proposal will be considered, including the cumulative effects thereof; among those are conservation, economics, aesthetics, general environmental concerns, wetlands, historic properties, fish and wildlife values, flood hazards, floodplain values, land use, navigation, shoreline erosion and accretion, recreation, water supply and conservation, water quality, energy needs, safety, food and fiber production, mineral needs, considerations of property ownership, and, in general, the needs and welfare of the people.

The U.S. Army Corps of Engineers is soliciting comments from the public; Federal, Native American Nations or tribal governments, State, and local agencies and officials; and other interested parties in order to consider and evaluate the impacts of this activity. Any comments received will be considered by the Corps to determine whether to issue, modify, condition or deny a permit for the work. To make this decision, comments are used to assess impacts on endangered species, historic properties, water quality, general environmental effects, and the other public interest factors listed above. Comments are used in the preparation of an Environmental Assessment and/or an Environmental Impact Statement pursuant to the National Environmental Policy Act. Comments are also used to determine the need for a public hearing and to determine the overall public interest of the activity.

COMMENT AND REVIEW PERIOD: Conventional mail or e-mail comments on this public notice will be accepted and made part of the record and will be considered in determining whether it would be in the public interest to authorize this proposal. In order to be accepted, e-mail comments must originate from the author's e-mail account and must include on the subject line of the e-mail message the permit applicant's name and reference number as shown below. All e-mail comments should be sent to Deborah.J.Knaub@usace.army.mil. Conventional mail comments should be sent to U.S. Army Corps of Engineers, Regulatory Branch, Post Office Box 3755, Seattle, Washington, 98124-3755. Both conventional mail or e-mail comments must include the permit applicant's name and reference number, as shown below, and the commentor's name, address, and phone number. All comments whether conventional mail or e-mail must reach this office, no later than the expiration date of this public notice to ensure consideration.

200400652

Please include the following name and reference number:

Wapato Point Community Association, 200400652

Encl
Drawings 6

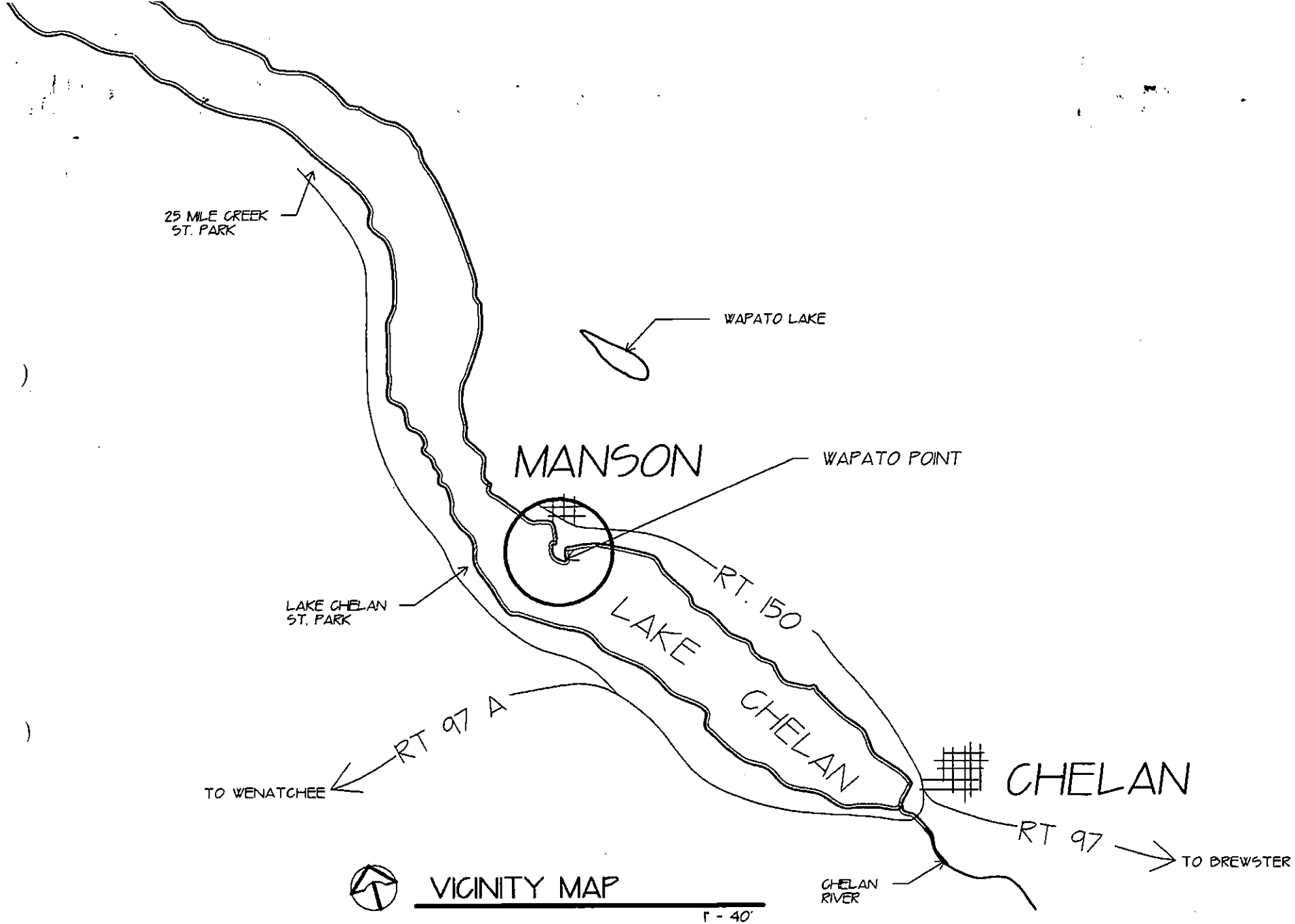

VICINITY MAP

1" - 40'

ADJ. PROP. OWNERS: WRIGHT-WAPATO INC.

REFERENCE: 200400652 APPLICATION BY: WAPATO POINT COMMUNITY ASSOCIATION OWNER: WRIGHT WAPATO PROJECT ADDRESS: PO BOX 426 MANSON WA 98831	PROPOSED 'NO WAKE' & MOORAGE BUOYS IN: LAKE CHELAN AT: SW SECT 35 28N 21E COUNTY: CHELAN STATE: WA.

12/20/04
~~3/16/04~~

1/6.

0409 WAP. PT. COM. ASSOC. PROPOSED BUOYS

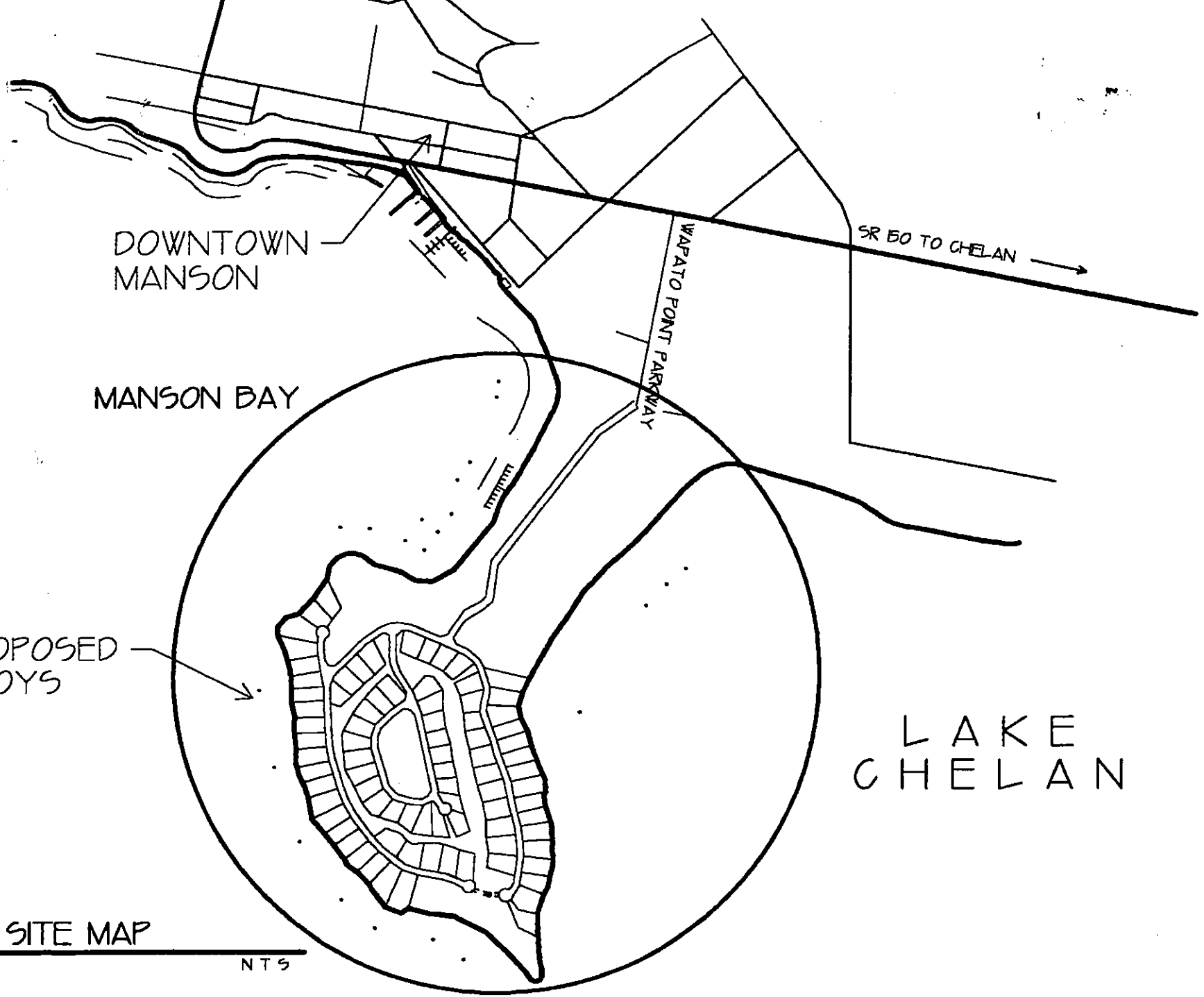

REFERENCE: 200400652 APPLICATION BY: WAPATO POINT COMMUNITY ASSOCIATION OWNER: WRIGHT WAPATO PROJECT ADDRESS: PO BOX 426 MANSON WA 98831	PROPOSED 'NO WAKE' & MOORAGE BUOYS IN: LAKE CHELAN AT: SW SECT 35 28N 21E COUNTY: CHELAN STATE: WA.

12/20/04
~~3/16/04~~

2/6

0409 WAP. PT. COM. ASSOC. PROPOSED BUOYS

\\Larry\ctity Documents\Cadd Drawings\Projects 2004\0409WapatoPt.Com.Assoc.Buoys.VCD 4/29/2004

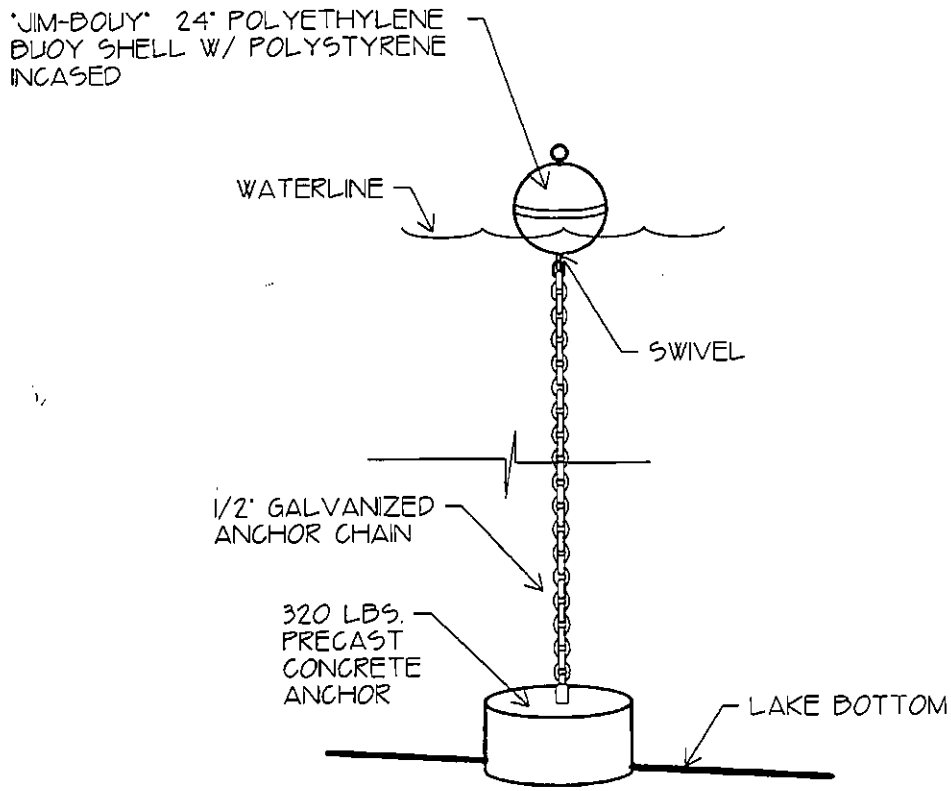

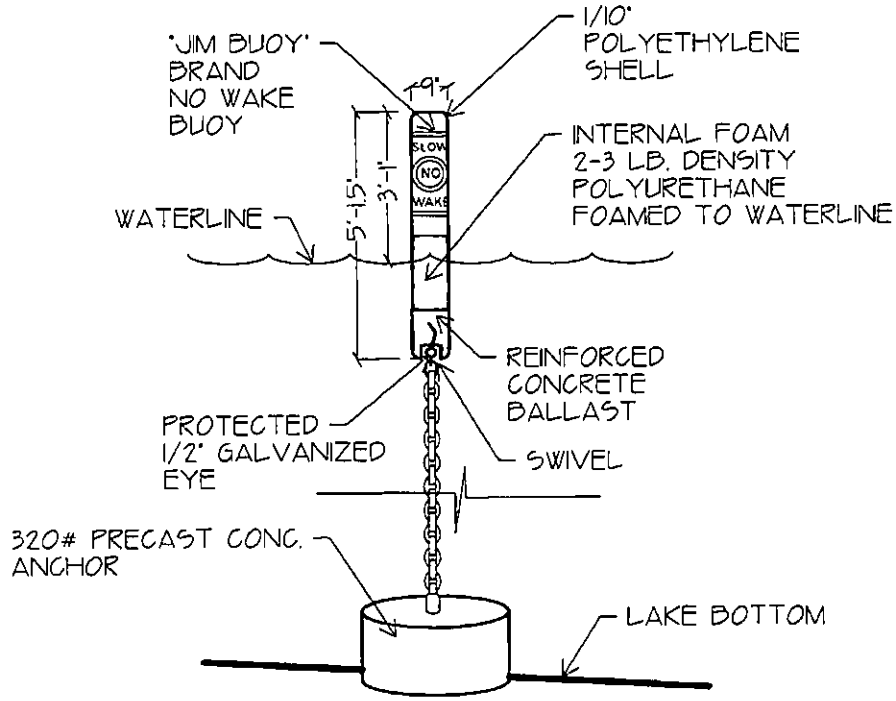

MOORING BUOY & NO-WAKE BUOY SCHEMATIC

NTS

REFERENCE: 200400652 APPLICATION BY: WAPATO PONT COMM. ASSCOC. OWNER: WRIGHT-WAPATO PROJECT ADDRESS: PO BOX 426 MANSON WA 98831	PROPOSED "NO WAKE" AND MOORAGE BUOYS IN: LAKE CHELAN AT: SW SECT 35 28N 21E COUNTY: CHELAN STATE: WA. REV. 12/20/04

3/6

0409 WAP. PT. COM. ASSOC. PROPOSED BUOY

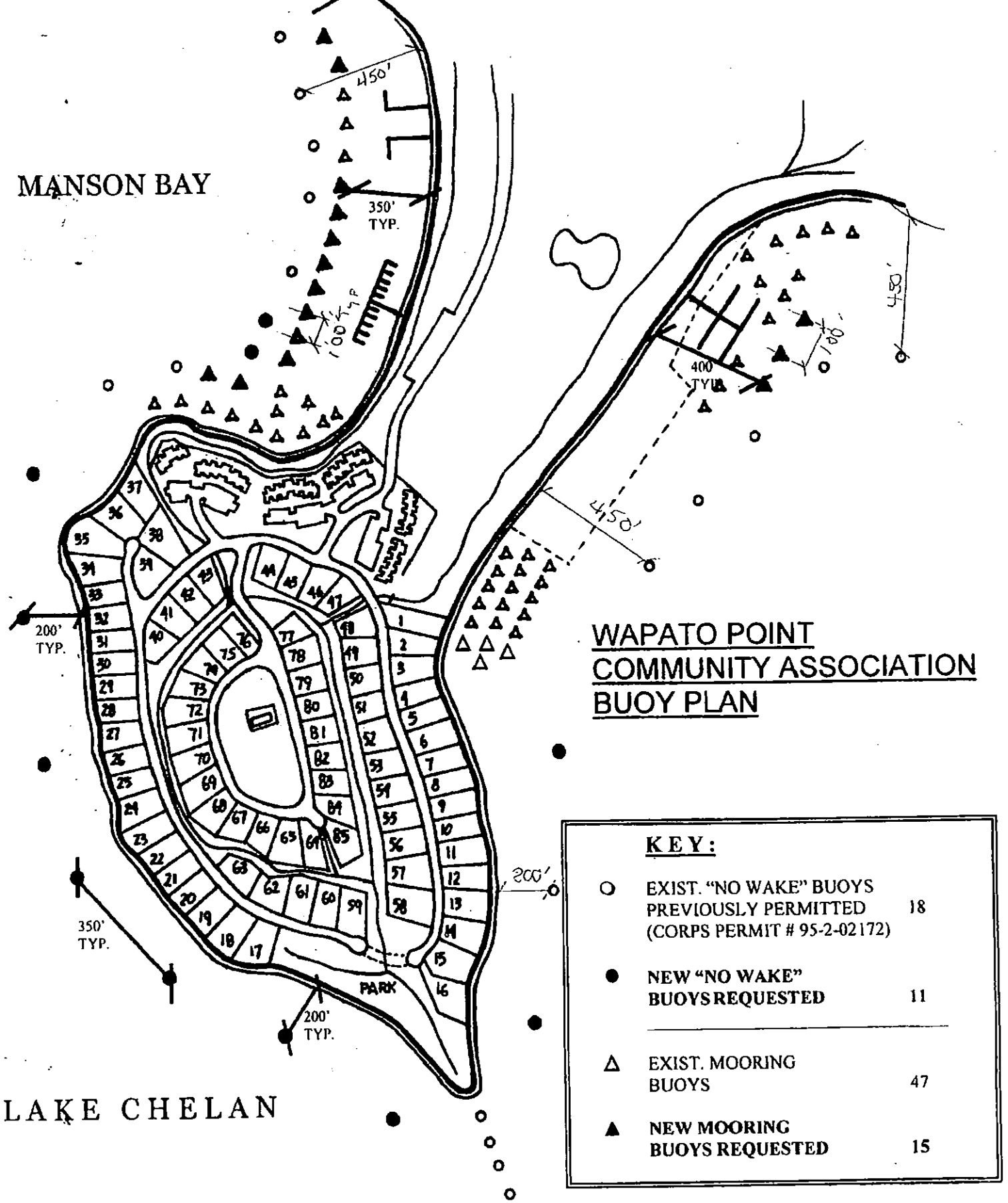

REFERENCE: 200400652
APPLICATION BY: WAPATO POINT COMM. ASSCOC.
OWNER: WRIGHT WAPATO
PROJECT ADDRESS: P.O. BOX 426 MANSON WA 98831

"NO WAKE" AND MOORAGE BUOYS
IN : LAKE CHELAN
AT: SW SECT 35 28 N 21 E
COUNTY: CHELAN STATE: WA REV 12/20/04

4/6
0409

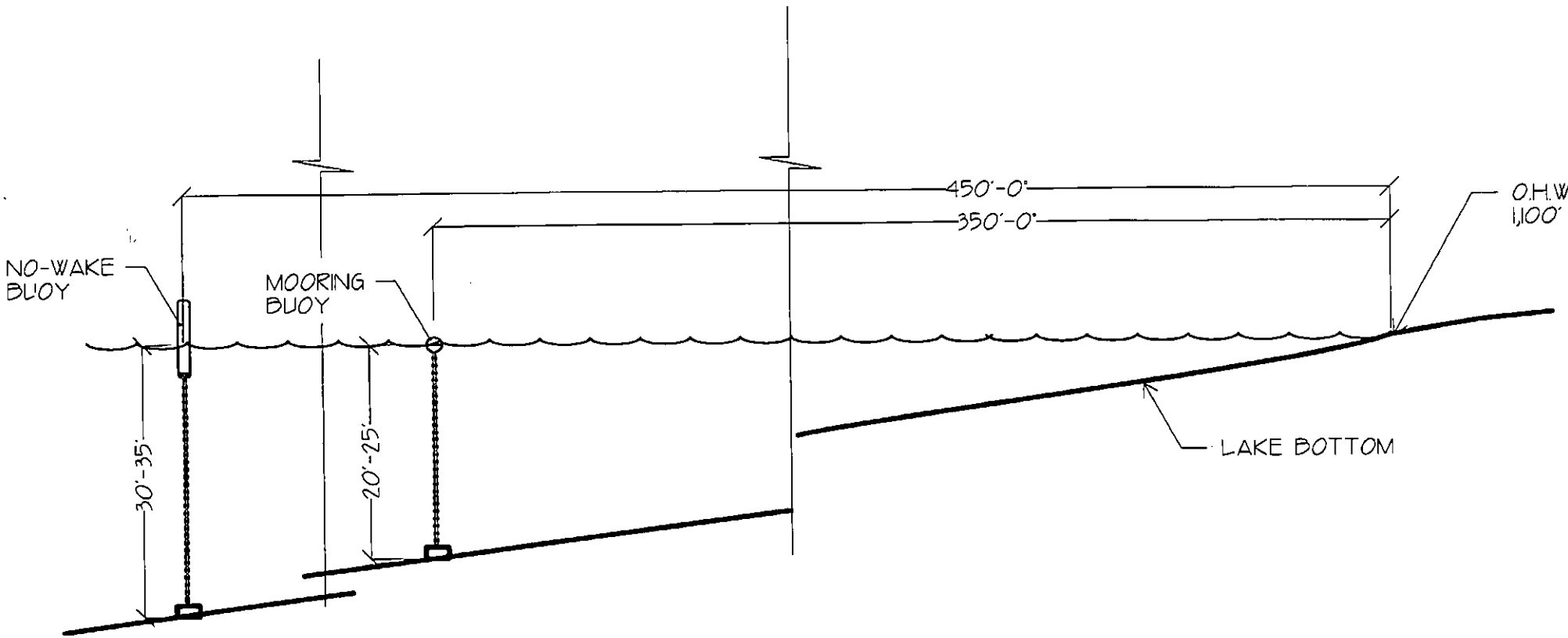

TYP. UPLAKE SECTION

1" = 20'

REFERENCE: 200400652 APPLICATION BY: WAPATO POINT COMM. ASSOC. OWNER: WRIGHT-WAPATO PROJECT ADDRESS: PO BOX 426 MANSON WA 98831	PROPOSED 'NO WAKE' AND MOORAGE BUOYS IN: LAKE CHELAN AT: SW SECT 35 28N 21E COUNTY: CHELAN STATE: WA. REV. 12/20/04

5/6

0409 WAP. PT. COM. ASSOC. PROPOSED BUOY

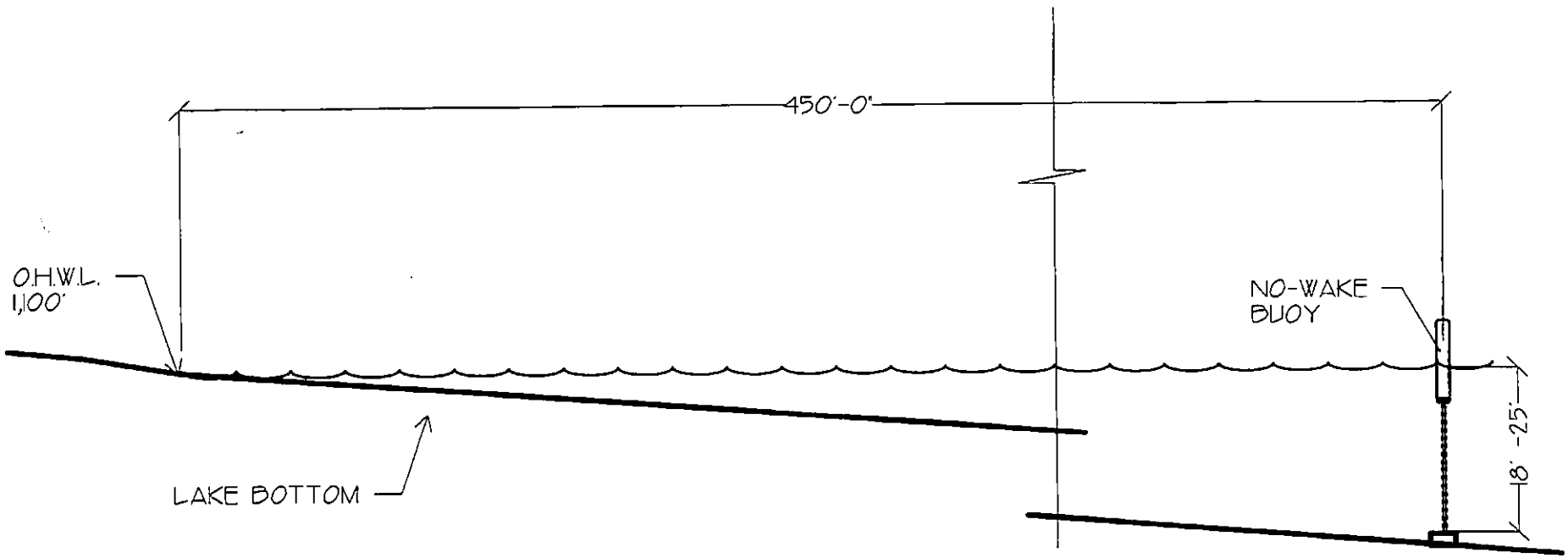

TYP. DOWNLAKE SECTION

1" = 20'

REFERENCE: 200400652 APPLICATION BY: WAPATO POINT COMM. ASSOC. OWNER: WRIGHT-WAPATO PROJECT ADDRESS: PO BOX 426 MANSON WA 98831	PROPOSED 'NO WAKE' AND MOORAGE BUOYS IN: LAKE CHELAN AT: SW SECT 35 28N 21E COUNTY: CHELAN STATE: WA. REV. 12/20/04

6/6

0409 WAP. PT. COM. ASSOC. PROPOSED BU

STATE OF WASHINGTON
DEPARTMENT OF ECOLOGY
P.O. Box 47600 • Olympia, Washington 98504-7600
(360) 407-6000 • TDD Only (Hearing Impaired) (360) 407-6006

STATE OF WASHINGTON
DEPARTMENT OF ECOLOGY

Notice of Application for
Water Quality Certification

Date: January 26,2005

Notice is herby given that a request has been filed with the Department of Ecology, pursuant to the requirements of Section 401 of the federal Clean Water Act of 1977 (PL 95-217), to certify that the project described in the U.S. Army Corps of Engineers Public Notice No. 200400652 will comply with the Sections 301, 302, 303, 306, and 307 of the Act, and with applicable provisions of State and Federal water pollution control laws.

Any person desiring to present views on the project pertaining to compliance with water pollution control laws may do so by providing written comments within 30 days of the above publication date to:

Federal Permit Coordinator
Department of Ecology
SEA Program
Post Office Box 47600
Olympia, Washington 98504-7600