US Army Corps
of Engineers
Seattle District

Public Notice of Application for Permit

Regulatory Branch
Post Office Box 3755
Seattle, Washington 98124-3755
Telephone (206) 764-3495
ATTN: Jessica Winkler, Project Manager

Public Notice Date: January 21, 2005
Expiration Date: February 21, 2005
Reference: 200400818
Name: Tacoma, Port of

Interested parties are hereby notified that an application has been received for a Department of the Army permit in accordance with Section 10 of the Rivers and Harbors Act of 1899, and Section 404 of the Clean Water Act for certain work described below and shown on the enclosed drawings.

APPLICANT - Port of Tacoma
Post Office Box 1837
Tacoma, Washington 98401
ATTN: Mr. Dick Gilmur
Telephone: (253) 383-9464

LOCATION – Blair Waterway (inner reach/turning basin, southwest corner, and bridge reach) and the Lower Puyallup River, at Tacoma, Pierce County, Washington.

WORK – The Port proposes to dredge and widen the Blair Waterway to a bottom depth of minus 51 feet Mean Lower Low Water (MLLW) plus one foot of allowable overdredge and make other improvements at three locations that are identified as the inner reach/turning basin, the southwest corner and the bridge reach. The newly created slopes resulting from the dredging actions would be covered with up to 57,000 cubic yards (cy) of riprap. A combination of select substrate (above –10 ft MLLW) and sandy dredged material (below –10 ft MLLW) would be placed on top of the riprap. Up to 2.97 million cubic yards (cy) of dredged material at the three locations is proposed for disposal at the Puget Sound Dredged Disposal Analysis (PSDDA) disposal site in Commencement Bay or for beneficial re-use under another permit authorization.

Inner reach/Turning basin: Dredge up to 2.6 million cy of material to create a 1,700 ft turning basin by cutting back up to 250 ft of land. Up to 230 ft of land would be cut back in the inner reach to create a 550 ft wide channel and a 150 ft wide berth. The existing wood chip facility and pier (including 400 piles) would be demolished and removed. The 1,200 ft pier that was approved under permit number 200000765, but has not yet been built, would be relocated as shown on sheet 5 and stormwater improvements would be made.

Southwest corner cutback: Dredge up to 105,000 cy of material to lengthen the berthing area by 96 ft. In order to protect existing mudflat area a 150 ft long sheet pile wall would be installed as shown on sheets 8 and 10. The existing mooring dolphin would be replaced and stormwater improvements would be made.

Blair bridge reach: Dredge up to 265,000 cy of material along 1,160 lineal feet of shoreline. The 100 ft cutback would require the removal of 425 ft of the southeastern end of Pier 4 (including 429 piles) and the relocation of two navigational aids. The cutback would impact 0.69 acres of the 3.12 acre Fairliner Habitat Area. The Fairliner habitat site was created as mitigation for several Port projects (U.S. Army Corps of

Engineers permit numbers 199391286 and 199491847). Improvements to the stormwater system are also proposed.

PURPOSE – Improve navigational access to the Blair Waterway and improve waterway safety.

PUGET SOUND DREDGED DISPOSAL ANALYSIS (PSDDA) – Dredged Material Testing: The proposed dredged material has been tested according to the procedures specified in PSDDA, a multi-agency program for the evaluation of dredged material proposed for disposal at open-water sites in Puget Sound. The PSDDA evaluations may include both chemical and biological testing of sediments. For this project, the PSDDA agencies determined that all 2,970,000 cubic yards were suitable for unconfined disposal at the PSDDA nondispersive (or dispersive) open-water disposal site in Commencement Bay or beneficial use. The sediment testing data are available at the U.S. Army Corps of Engineers (Corps), Seattle District, Dredged Material Management Office.

Disposal Site Use Conditions: The following standard site use conditions will be specified by the Corps and the Washington Department of Natural Resources as part of the Federal/State permitting processes: (1) during the periods of Tribal fishing in the disposal site area, disposal will only occur during daylight hours; and (2) during the daylight hours, "navigation rules of the road" will apply to the dredger in the event Tribal fishing is occurring at the disposal site. The dredger's permit will state that disposal is to occur when there is no Tribal fishing occurring at the disposal site. Other appropriate special conditions may be added as a result of comments received during the public review period for this public notice.

MITIGATION – The conceptual mitigation plan includes creation of intertidal aquatic habitat at a site on the lower Puyallup River (Gog-le-hi-te II), as well as preservation of riparian habitat on the upper Puyallup River, and enhancement of the remainder of the existing Fairliner site.

Gog-le-hi-te II mitigation area: The Port proposes to setback the existing Corps levee along the eastern shoreline of the Puyallup River, upstream of the existing Gog-le-hi-te mitigation site, in order to create additional intertidal habitat. A perimeter levee would be constructed encompassing the mitigation area. Phase one of the mitigation area would consist of the construction of approximately 6.22 acres of aquatic habitat below elevation +13 ft MLLW. The existing upland would be excavated down to native material, removing any garbage remaining from when the site was used as a municipal landfill. Additional excavation to target elevations ranging from +5 to +13 ft MLLW would be completed prior to breaching the existing levee to allow hydraulic connection to the River. The area between +10 and +13 ft MLLW would be seeded with a mixture of freshwater marsh species and the upland areas would be plated with trees, shrubs and ground cover. Of the 6.22 acres of aquatic habitat created in Phase 1, 1.38 acres would be assigned to the Blair Waterway Infrastructure Improvements Project. The remaining 4.84 acres of habitat constructed in Phase 1 would be proposed for mitigation for future Port of Tacoma projects. There is currently no schedule for the implementation of the Phase 2 habitat action. A compacted soil berm would be constructed with on-site soil to separate the Phase 1 from the Phase 2 habitat area.

Upper Puyallup River: The Port proposes to preserve approximately 10 acres of forested riparian and wetland property near Orting. The Port proposes to place deed restrictions on the property and transfer ownership to Pierce County.

Fairliner site: The Port proposes to install 10 pieces of large woody debris at the toe of the riprap slope along the northwest shore. Up to 20 cy of pit run fill (2 inch minus) would be placed upslope of the woody debris clusters to provide substrate diversity.

ENDANGERED SPECIES - The Endangered Species Act (ESA) requires federal agencies to consult with the National Marine Fisheries Service (NMFS) and/or U.S. Fish and Wildlife Service (USFWS) pursuant to Section

7 of ESA on all actions that may affect a species listed (or proposed for listing) under the ESA as threatened or endangered or any designated critical habitat. The Puget Sound chinook (*Oncorhynchus tshawytscha*), threatened, Coastal/Puget Sound bull trout (*Salvelinus confluentus*), threatened, bald eagle (*Haliaeetus leucocephalus*) threatened, Steller sea lion (*Eumetopias jubatus*), threatened, Humpback whale (*Megaptera novaeangliae*), endangered, Leatherback sea turtle (*Dermochelys coriacea*), endangered, and Puget Sound Killer whale (*Orcinus orca)*, proposed for listing in the state of Washington, may occur in the proposed project area. For Stellar sea lion, critical habitat has been designated and for chinook and bull trout, critical habitat has been proposed. After receipt of comments from this public notice, the Corps will evaluate the potential impacts to the chinook, bull trout, bald eagle, Steller sea lion, Humpback whale, leatherback sea turtle, and Killer whale.

ESSENTIAL FISH HABITAT - The Magnuson-Stevens Fishery Conservation and Management Act, as amended by the Sustainable Fisheries Act of 1996, requires all Federal agencies to consult with the NMFS on all actions, or proposed actions, permitted, funded, or undertaken by the agency, that may adversely affect Essential Fish Habitat (EFH). The proposed action would impact approximately 23 acres of EFH for Pacific salmon, groundfish, and Coastal Pelagic species in the project area.

If the Corps determines that the proposed action may adversely affect EFH for federally managed fisheries in Washington waters, the Corps will initiate EFH consultation with the NMFS. The Corps' final determination relative to project impacts and the need for mitigation measures is subject to review by and coordination with the NMFS.

CULTURAL RESOURCES - The District Engineer has reviewed the latest published version of the National Register of Historic Places, lists of properties determined eligible and other sources of information. There are no recorded historic properties within the permit area. The permit area has been so extensively modified by modern development that little likelihood exists for the proposed project to impinge upon an undisturbed historic property. The District Engineer invites responses to this public notice from Native American Nations or tribal governments; Federal, State, and local agencies; historical and archeological societies; and other parties likely to have knowledge of or concerns with historic properties in the area. This public notice initiates consultation under Section 106 of the National Historic Preservation Act (36 CFR 800.4[a][3]), with any Tribe that has information or concerns with historic properties in the proposed permit area.

PUBLIC HEARING - Any person may request, in writing, within the comment period specified in this notice, that a public hearing be held to consider this application. Requests for public hearings shall state, with particularity, the reasons for holding a public hearing.

EVALUATION - The decision whether to issue a permit will be based on an evaluation of the probable impacts, including cumulative impacts, of the proposed activity on the public interest. That decision will reflect the national concern for both protection and utilization of important resources. The benefits which reasonably may be expected to accrue from the proposal must be balanced against its reasonably foreseeable detriments. All factors which may be relevant to the proposal will be considered, including the cumulative effects thereof; among those are conservation, economics, aesthetics, general environmental concerns, wetlands, historic properties, fish and wildlife values, flood hazards, floodplain values, land use, navigation, shoreline erosion and accretion, recreation, water supply and conservation, water quality, energy needs, safety, food and fiber production, mineral needs, considerations of property ownership, and, in general, the needs and welfare of the people.

The Corps is soliciting comments from the public; Native American Nations or tribal governments; Federal, State, and local agencies and officials; and other interested parties in order to consider and evaluate the impacts of this activity. Any comments received will be considered by the Corps to determine whether to issue, modify, condition or deny a permit for the work. To make this decision, comments are used to assess

impacts on endangered species, historic properties, water quality, general environmental effects, and the other public interest factors listed above. Comments are used in the preparation of an Environmental Assessment and/or an Environmental Impact Statement pursuant to the National Environmental Policy Act. Comments are also used to determine the need for a public hearing and to determine the overall public interest of the activity.

The proposed discharge will be evaluated for compliance with guidelines promulgated by the Environmental Protection Agency under authority of Section 404(b)(1) of the Clean Water Act. These guidelines require an alternatives analysis for any proposed discharge of dredged or fill material into waters of the United States.

ADDITIONAL EVALUATION – For the portions of the project that are on Port property, the State of Washington is reviewing this work for consistency with the approved Washington Coastal Zone Management Program and for compliance with the applicable State and Federal water quality standards pursuant to Section 401 of the Clean Water Act. For the portion of the project that is on Tribal property, the Puyallup Tribe is reviewing this work for compliance with the applicable Federal water quality standards pursuant to Section 401 of the Clean Water Act.

This proposal is the subject of Shorelines Substantial Development Permit application, which is being processed by the City of Tacoma.

COMMENT AND REVIEW PERIOD – Conventional mail or e-mail comments on this public notice will be accepted and made part of the record and will be considered in determining whether it would be in the public interest to authorize this proposal. In order to be accepted, e-mail comments must originate from the author's e-mail account and must include on the subject line of the e-mail message the permit applicant's name and reference number as shown below. All e-mail comments should be sent to Jessica.G.Winkler@usace.army.mil. Conventional mail comments should be sent U.S. Army Corps of Engineers, Regulatory Branch, Post Office Box 3755, Seattle, Washington, 98124-3755. Both conventional mail or e-mail comments must include the permit applicant's name and reference number, as shown below, and the commentor's name, address, and phone number. All comments whether conventional mail or e-mail must reach this office, no later than the expiration date of this public notice to ensure consideration. Please include the following name and reference number:

Port of Tacoma, 200400818

Encl
Drawings (21)

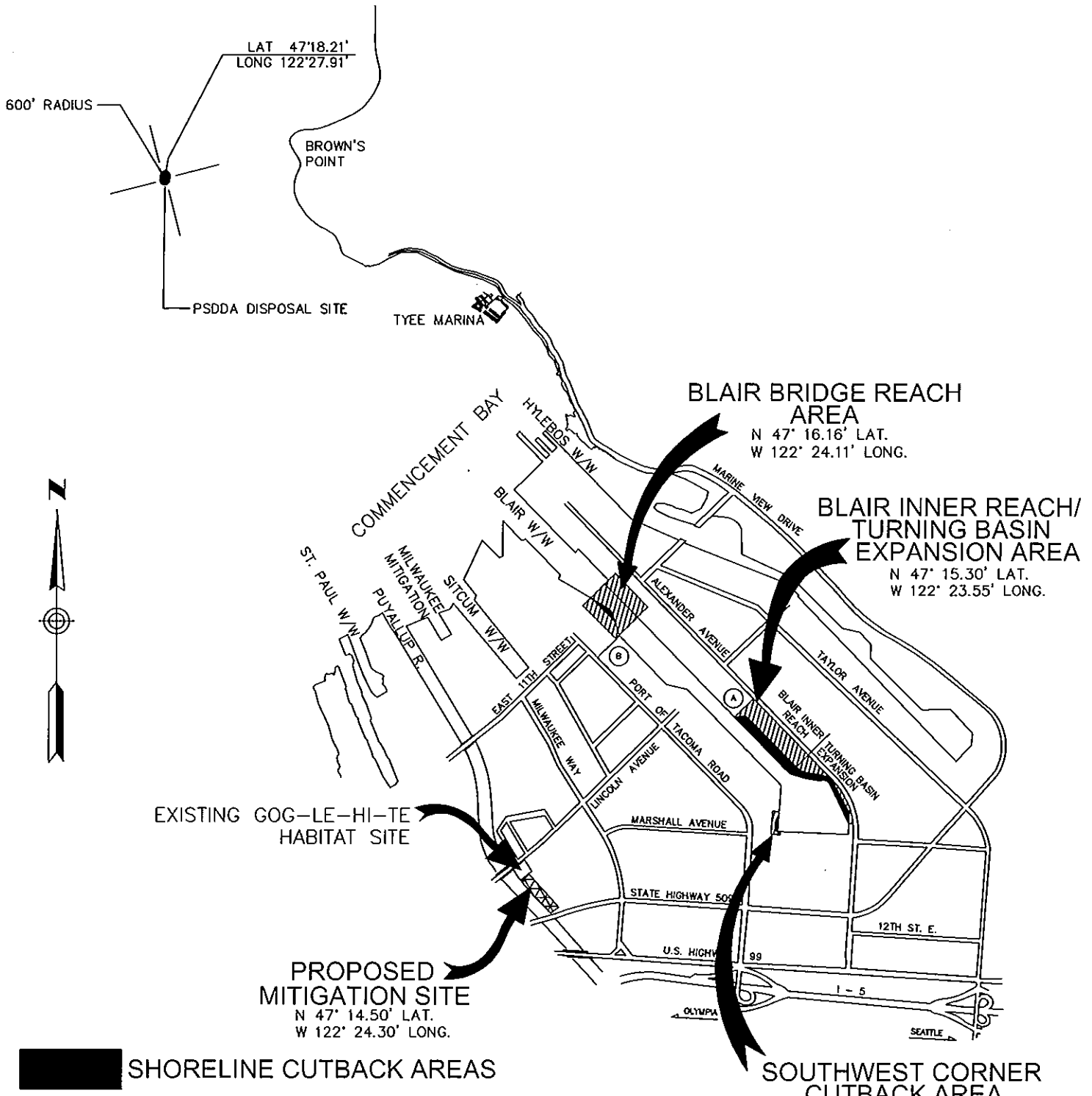

VICINITY MAP

N.T.S.

PURPOSE: IMPROVE THE BLAIR WATERWAY

DATUM: MLLW = 0.00 FEET (NOS)

ADJACENT PROPERTY OWNERS:

Ⓐ PUYALLUP TRIBE OF INDIANS

Ⓑ CONCRETE TECH. INC.

PORT OF TACOMA U.S.A.

PORT OF TACOMA
P.O. BOX 1837 TACOMA, WASHINGTON 98401
(253) 383-5841

BLAIR WATERWAY INFRASTRUCTURE IMPROVEMENTS PROJECT

200400818

IN: BLAIR WATERWAY
AT: PORT OF TACOMA
COUNTY OF: PIERCE STATE: WA
APPLICATION BY: PORT OF TACOMA

SHEET NO. 1 OF 21 DATE: 11/24/04

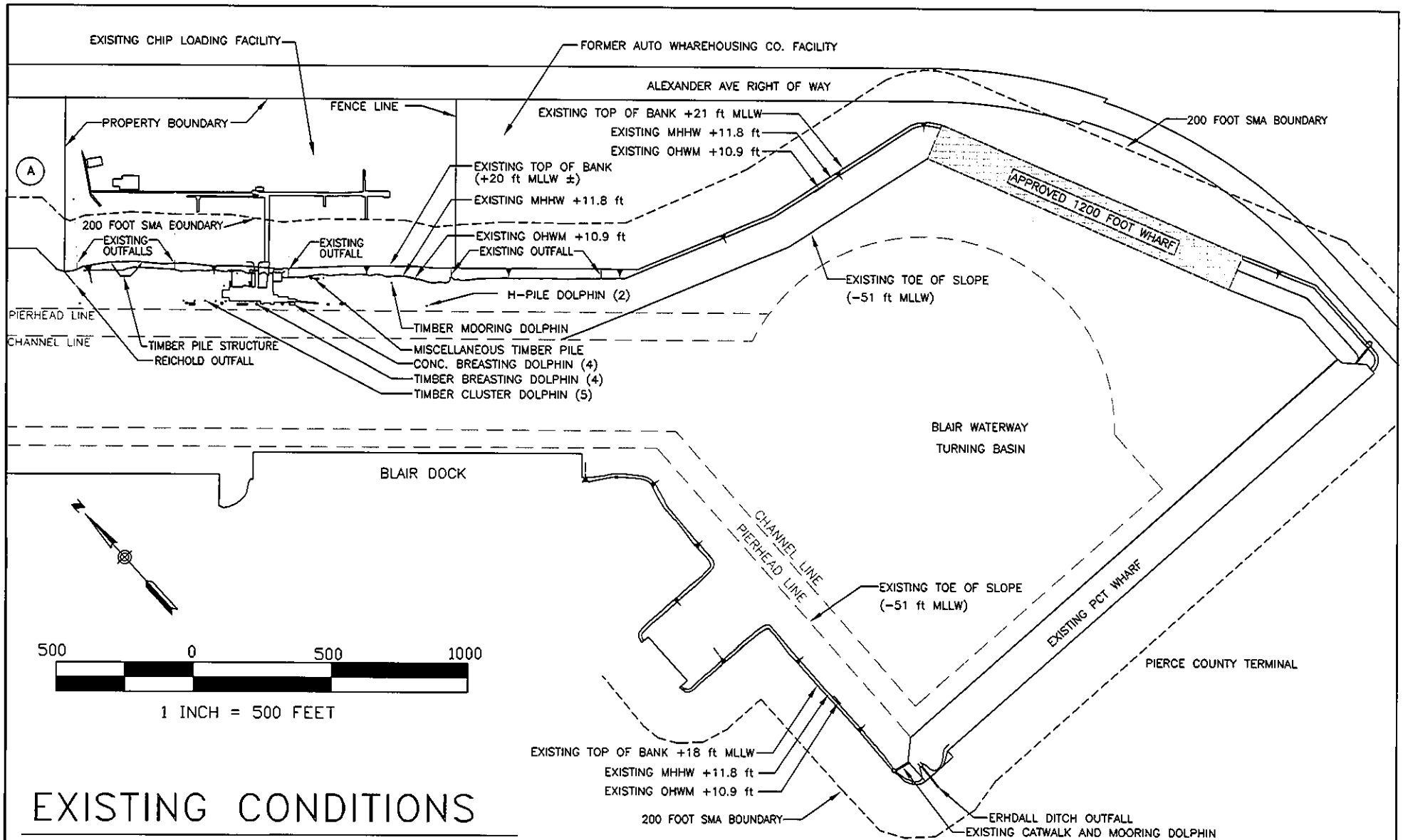

EXISTING CONDITIONS

EXISTING CONDITIONS SHOWN ARE THE CONDITIONS APPROVED AS PART OF THE PIERCE COUNTY TERMINAL EXPANSION PROJECT, WHICH IS CURRENTLY UNDER CONSTRUCTION (COE # 2000-2-00765 AND 200000765)

PURPOSE: IMPROVE THE BLAIR WATERWAY

DATUM: MLLW = 0.00 FEET (NOS)

ADJACENT PROPERTY OWNERS

(A) PUYALLUP TRIBE OF INDIANS

PORT OF TACOMA U.S.A.

PORT OF TACOMA
P.O. BOX 1837 TACOMA, WASHINGTON 98401
(253) 383-5841

BLAIR WATERWAY INFRASTRUCTURE IMPROVEMENTS PROJECT
200400818

IN: BLAIR WATERWAY
AT: PORT OF TACOMA
COUNTY OF: PIERCE STATE: WA
APPLICATION BY: PORT OF TACOMA

SHEET NO. 2 OF 21 DATE: 11/24/04

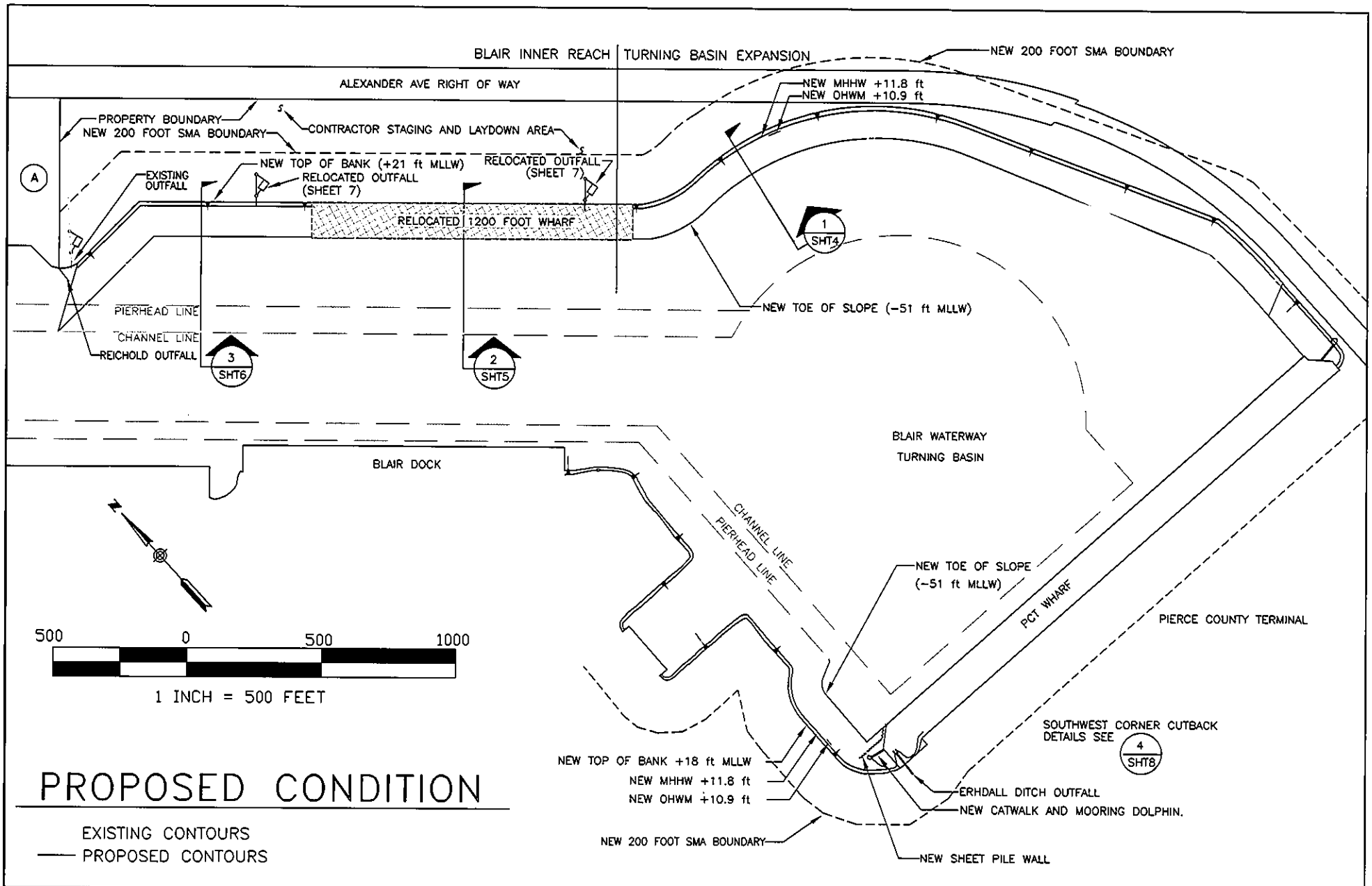

PURPOSE: IMPROVE THE BLAIR WATERWAY

DATUM: MLLW = 0.00 FEET (NOS)

ADJACENT PROPERTY OWNERS

(A) PUYALLUP TRIBE OF INDIANS

PORT of TACOMA U.S.A.

PORT OF TACOMA
P.O. BOX 1837 TACOMA, WASHINGTON 98401
(253) 383-5841

BLAIR WATERWAY INFRASTRUCTURE IMPROVEMENTS PROJECT

200400818

IN: BLAIR WATERWAY
AT: PORT OF TACOMA
COUNTY OF: PIERCE STATE: WA
APPLICATION BY: PORT OF TACOMA

SHEET NO. 3 OF 21 DATE: 11/24/04

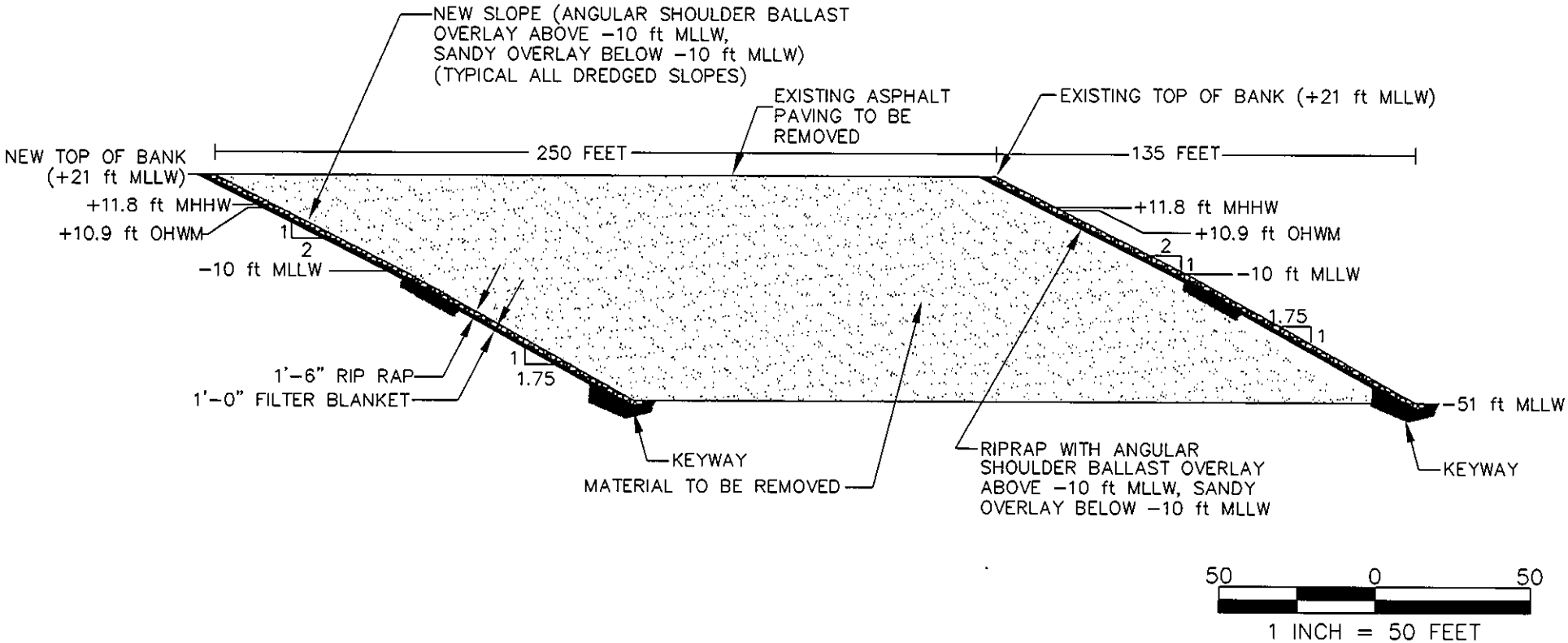

1
SHT3

TURNING BASIN EXPANSION SECTION – SHORELINE CUTBACK AREA

PURPOSE: IMPROVE THE BLAIR WATERWAY

DATUM: MLLW = 0.00 FEET (NOS)

PORT OF TACOMA U.S.A.

PORT OF TACOMA
P.O. BOX 1837 TACOMA, WASHINGTON 98401
(253) 383-5841

BLAIR WATERWAY INFRASTRUCTURE IMPROVEMENTS PROJECT
200400818
IN: BLAIR WATERWAY
AT: PORT OF TACOMA
COUNTY OF: PIERCE STATE: WA
APPLICATION BY: PORT OF TACOMA

SHEET NO. 4 OF 21 DATE: 11/24/04

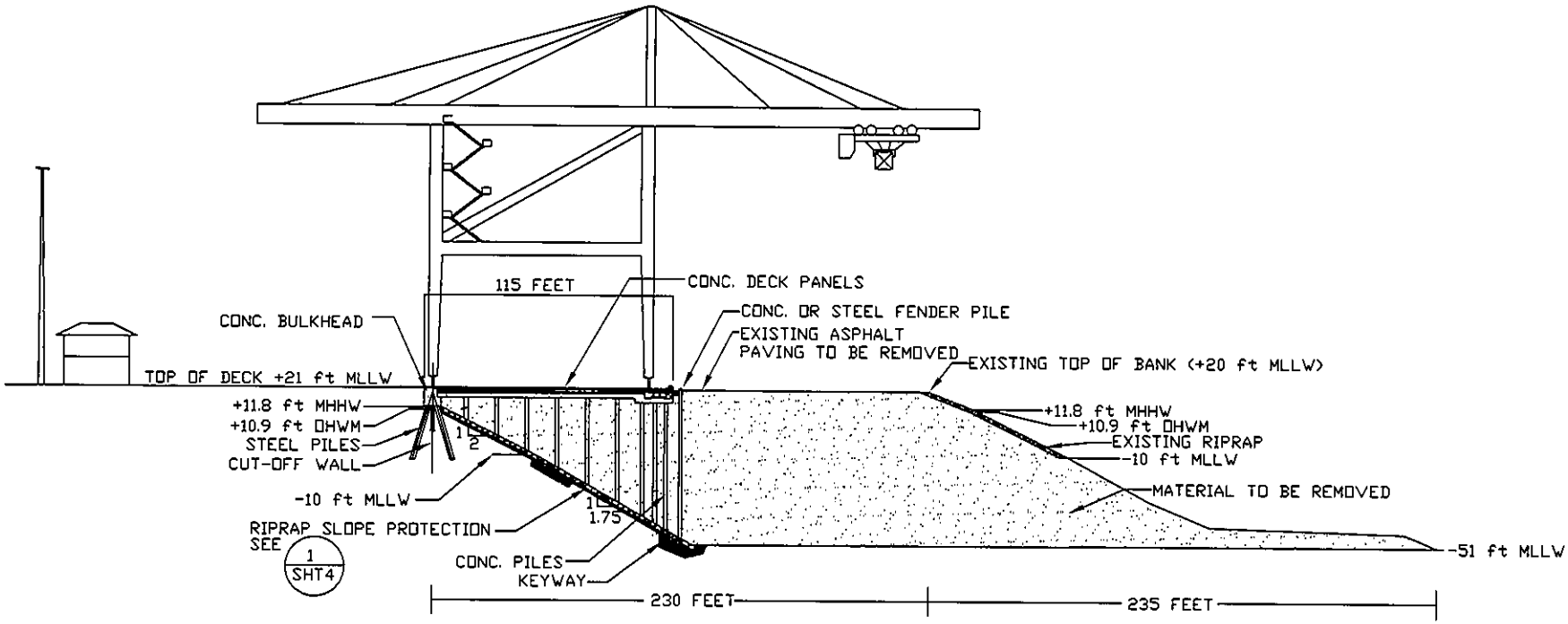

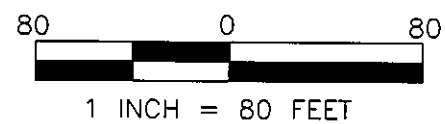

2 SHT3

BLAIR INNER REACH SECTION – RELOCATED WHARF AND CUTBACK AREA

(1,200 FT WHARF APPROVED AS PART OF THE PIERCE COUNTY TERMINAL EXPANSION PROJECT, COE # 2000-2-00765 AND 200000765. RELOCATION IS PART OF CURRENT PROJECT.)

PURPOSE: IMPROVE THE BLAIR WATERWAY

DATUM: MLLW = 0.00 FEET (NOS)

PORT of TACOMA U.S.A.

PORT OF TACOMA
P.O. BOX 1837 TACOMA, WASHINGTON 98401
(253) 383-5841

BLAIR WATERWAY INFRASTRUCTURE IMPROVEMENTS PROJECT
200400818
IN: BLAIR WATERWAY
AT: PORT OF TACOMA
COUNTY OF: PIERCE STATE: WA
APPLICATION BY: PORT OF TACOMA

SHEET NO. 5 OF 21 DATE: 11/24/04

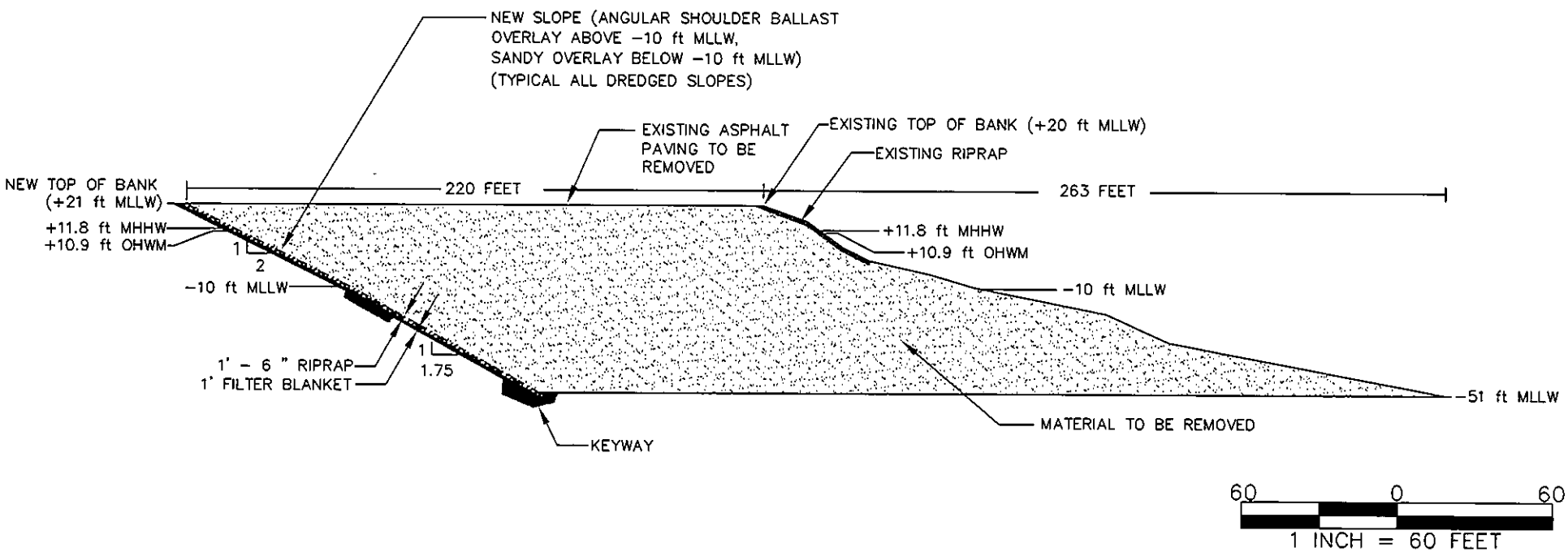

3
SHT3

BLAIR INNER REACH SECTION – SHORELINE CUTBACK AREA

PURPOSE: IMPROVE THE BLAIR WATERWAY

DATUM: MLLW = 0.00 FEET (NOS)

PORT OF TACOMA U.S.A.

PORT OF TACOMA
P.O. BOX 1837 TACOMA, WASHINGTON 98401
(253) 383-5841

BLAIR WATERWAY INFRASTRUTURE
IMPROVEMENTS PROJECT
200400818

IN: BLAIR WATERWAY
AT: PORT OF TACOMA
COUNTY OF: PIERCE STATE: WA
APPLICATION BY: PORT OF TACOMA

SHEET NO. 6 OF 21 DATE: 11/24/04

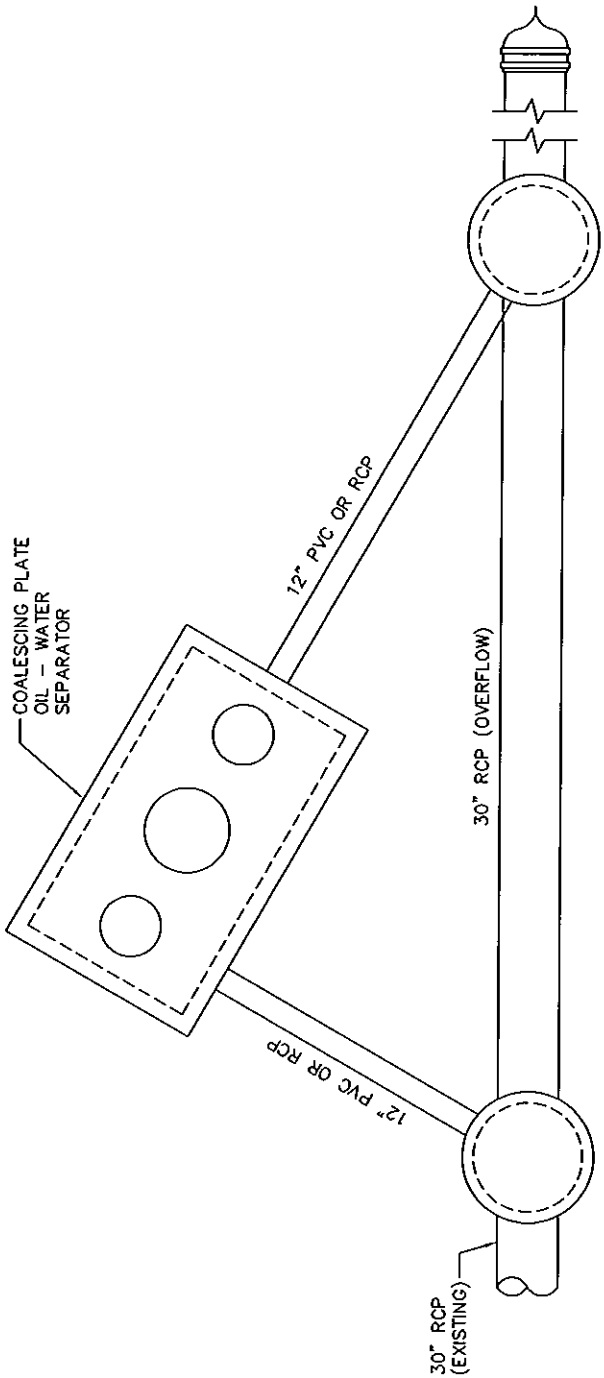

PLAN - NEW OUTFALL

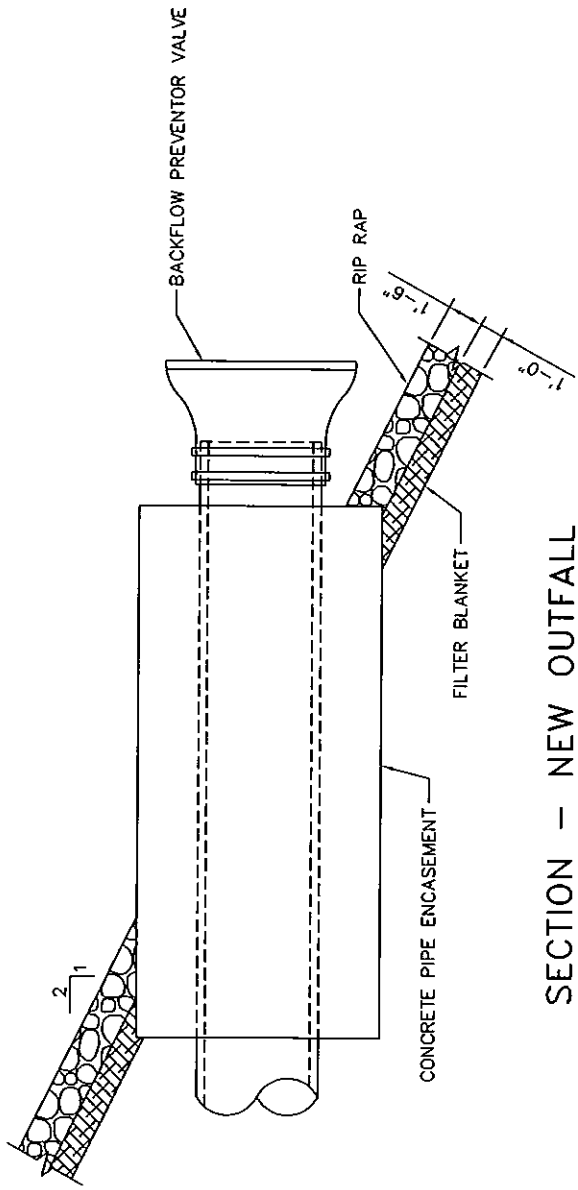

SECTION - NEW OUTFALL

PURPOSE: IMPROVABLE BLAIR WATERWAY

DATUM: MLLW = 0.00 FEET (NOS)

ADJACENT PROPERTY OWNERS:

PORT of TACOMA U.S.A.

PORT OF TACOMA
P.O. BOX 1837 TACOMA, WASHINGTON 98401
(253) 383-5841

BLAIR WATERWAY INFRASTRUCTURE
IMPROVEMENTS PROJECT
200400818
IN: BLAIR WATERWAY
AT: PORT OF TACOMA
COUNTY OF: PIERCE STATE: WA
APPLICATION BY: PORT OF TACOMA

SHEET NO. 7 OF 21 DATE: 11/24/04

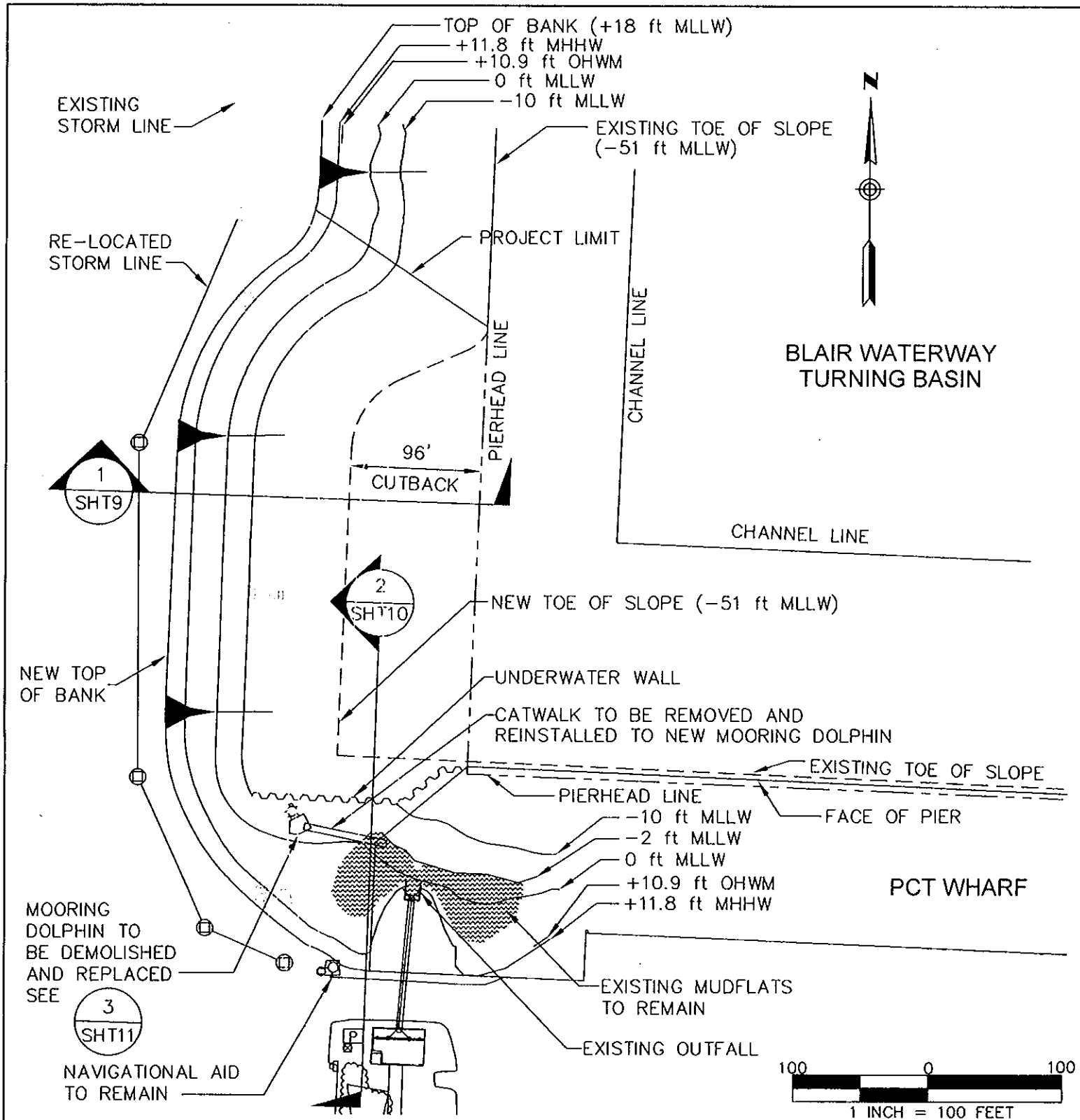

SOUTHWEST CORNER CUTBACK PROPOSED CONDITION

EXISTING STRUCTURES AND CONTOURS
—— PROPOSED STRUCTURES AND CONTOURS

PURPOSE: IMPROVE THE BLAIR WATERWAY

DATUM: MLLW = 0.00 FEET (NOS)

PORT OF TACOMA U.S.A.

PORT OF TACOMA
P.O. BOX 1837 TACOMA, WASHINGTON 98401
(253) 383-5841

BLAIR WATERWAY INFRASTRUCTURE IMPROVEMENTS PROJECT
200400818

IN: BLAIR WATERWAY
AT: PORT OF TACOMA
COUNTY OF: PIERCE STATE: WA
APPLICATION BY: PORT OF TACOMA

SHEET NO. 8 OF 21 DATE: 11/24/04

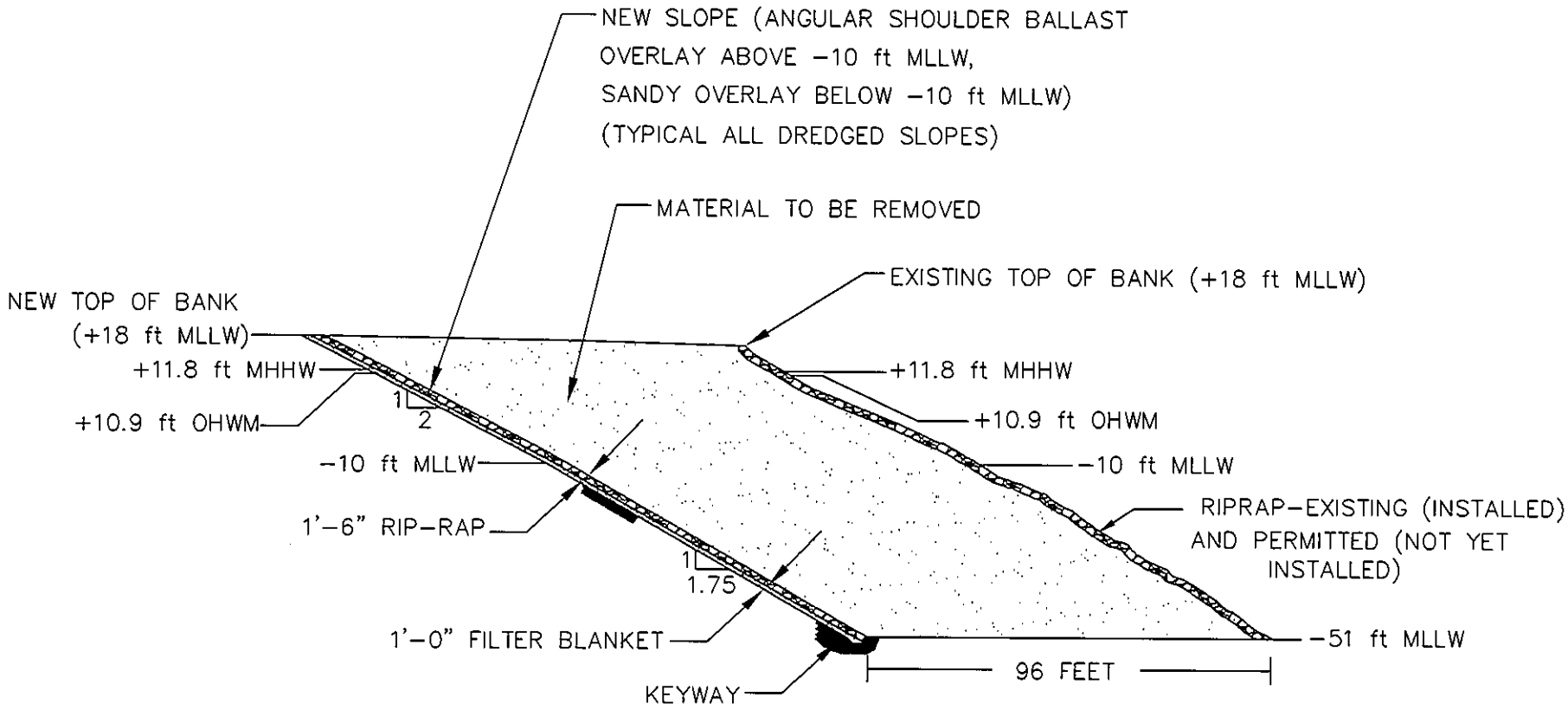

1
SHT7

40 0 40
1 INCH = 40 FEET

SOUTHWEST CORNER CUTBACK – SHORELINE CUTBACK AREA

PURPOSE: IMPROVE THE BLAIR WATERWAY

DATUM: MLLW = 0.00 FEET (NOS)

PORT OF TACOMA U.S.A.

PORT OF TACOMA
P.O. BOX 1837 TACOMA, WASHINGTON 98401
(253) 383-5841

BLAIR WATERWAY INFRASTRUTURE
IMPROVEMENTS PROJECT
200400818

IN: BLAIR WATERWAY
AT: PORT OF TACOMA
COUNTY OF: PIERCE STATE: WA
APPLICATION BY: PORT OF TACOMA

SHEET NO. 9 OF 21 DATE: 11/24/04

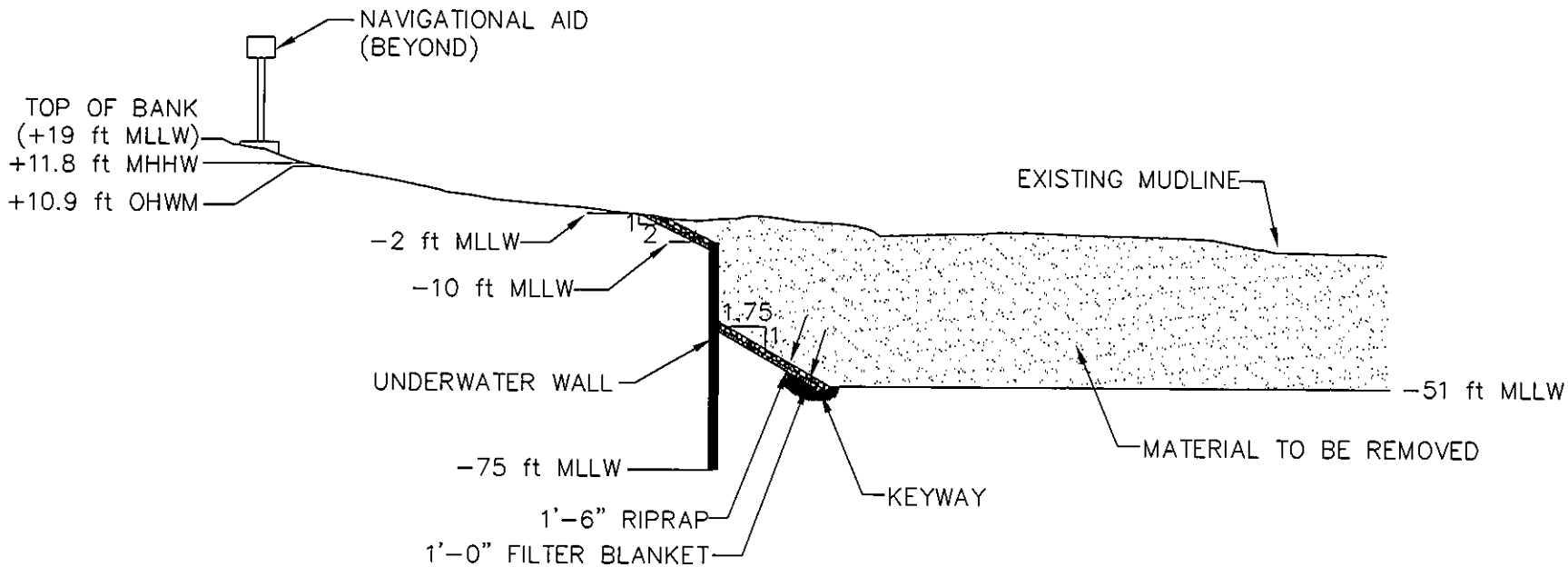

2
SHT8

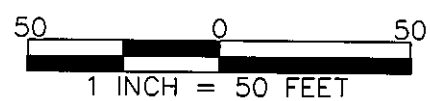

SOUTHWEST CORNER CUTBACK – SHORELINE CUTBACK AREA

PURPOSE: IMPROVE THE BLAIR WATERWAY

DATUM: MLLW = 0.00 FEET (NOS)

PORT OF TACOMA U.S.A.

PORT OF TACOMA
P.O. BOX 1837 TACOMA, WASHINGTON 98401
(253) 383-5841

BLAIR WATERWAY INFRASTRUTURE
IMPROVEMENTS PROJECT
200400818

IN: BLAIR WATERWAY
AT: PORT OF TACOMA
COUNTY OF: PIERCE STATE: WA
APPLICATION BY: PORT OF TACOMA

SHEET NO. 10 OF 21 DATE: 11/24/04

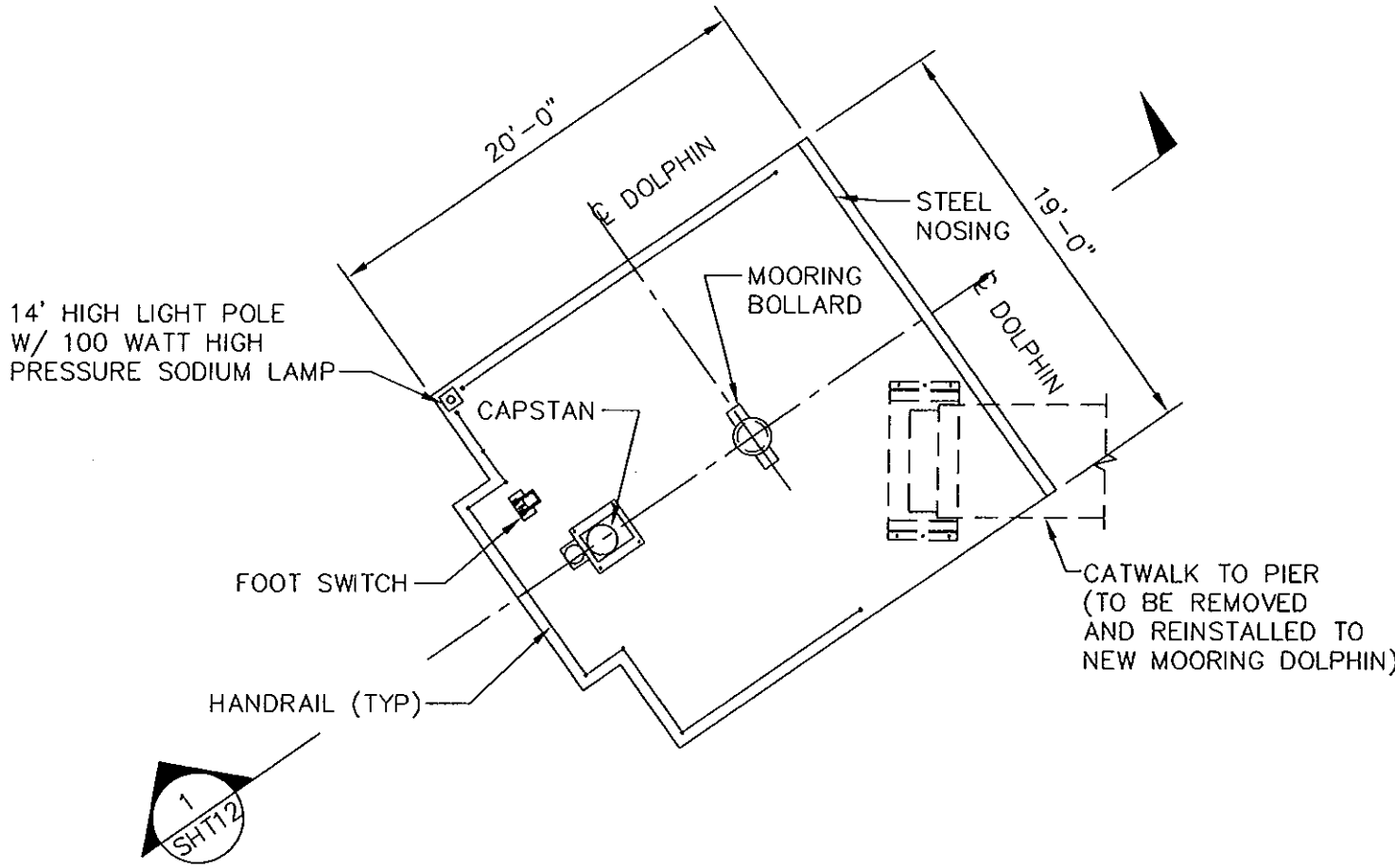

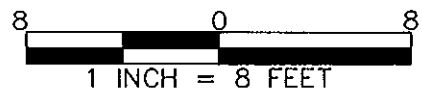

PLAN – MOORING DOLPHIN

PURPOSE: IMPROVE THE BLAIR WATERWAY

DATUM: MLLW = 0.00 FEET (NOS)

PORT OF TACOMA U.S.A.

PORT OF TACOMA
P.O. BOX 1837 TACOMA, WASHINGTON 98401
(253) 383-5841

BLAIR WATERWAY INFRASTRUCTURE IMPROVEMENTS PROJECT

200400818

IN: BLAIR WATERWAY
AT: PORT OF TACOMA
COUNTY OF: PIERCE STATE: WA
APPLICATION BY: PORT OF TACOMA

SHEET NO. 11 OF 21 DATE: 11/24/04

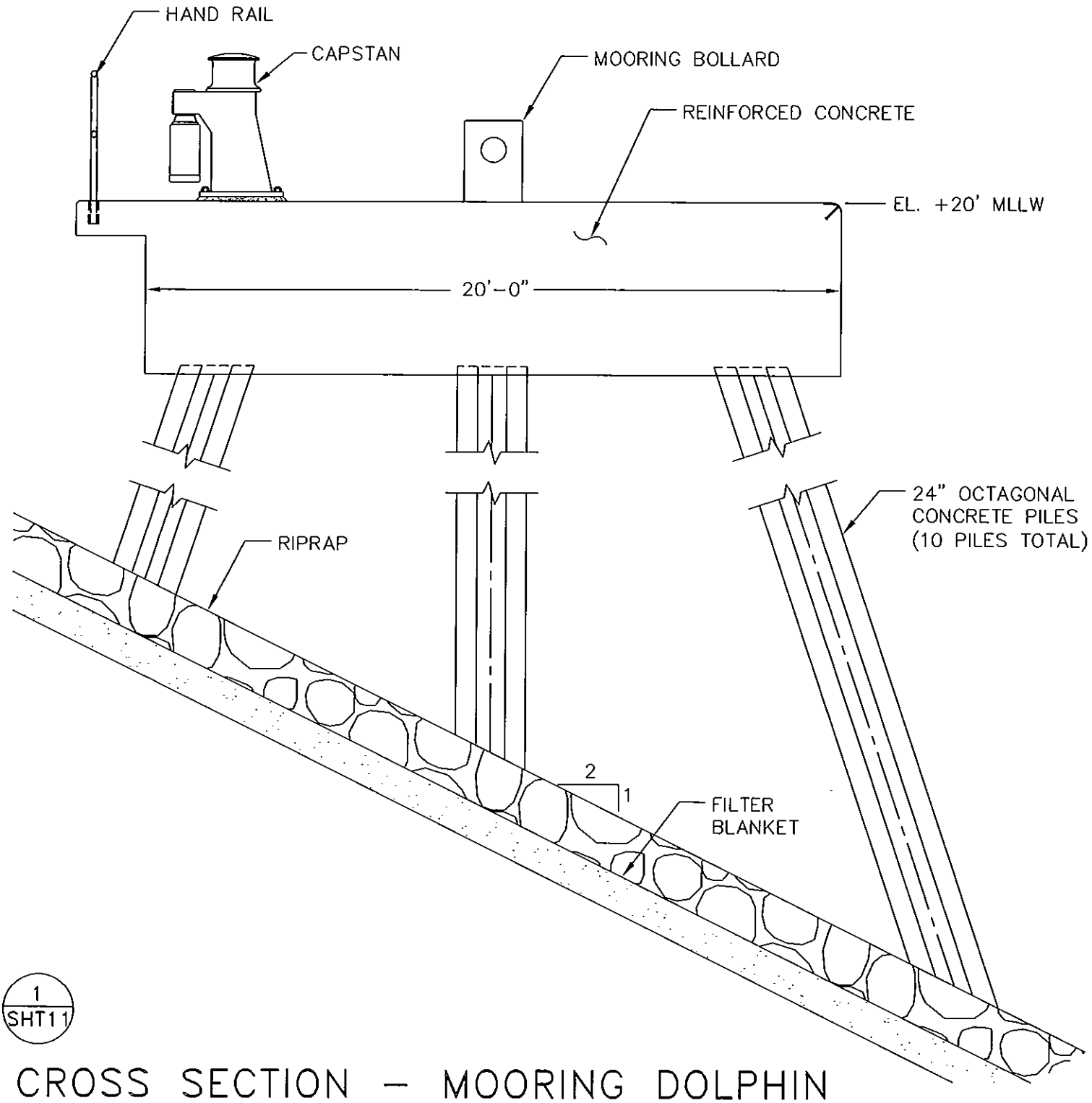

CROSS SECTION – MOORING DOLPHIN

0 4 8

1 INCH = 4 FEET

PURPOSE: IMPROVE THE BLAIR WATERWAY

DATUM: MLLW = 0.00 FEET (NOS)

PORT OF TACOMA
P.O. BOX 1837 TACOMA, WASHINGTON 98401
(253) 383-5841

BLAIR WATERWAY INFRASTRUCTURE IMPROVEMENTS PROJECT

200400818

IN: BLAIR WATERWAY
AT: PORT OF TACOMA
COUNTY OF: PIERCE STATE: WA
APPLICATION BY: PORT OF TACOMA

SHEET NO. 12 OF 21 DATE: 11/24/04

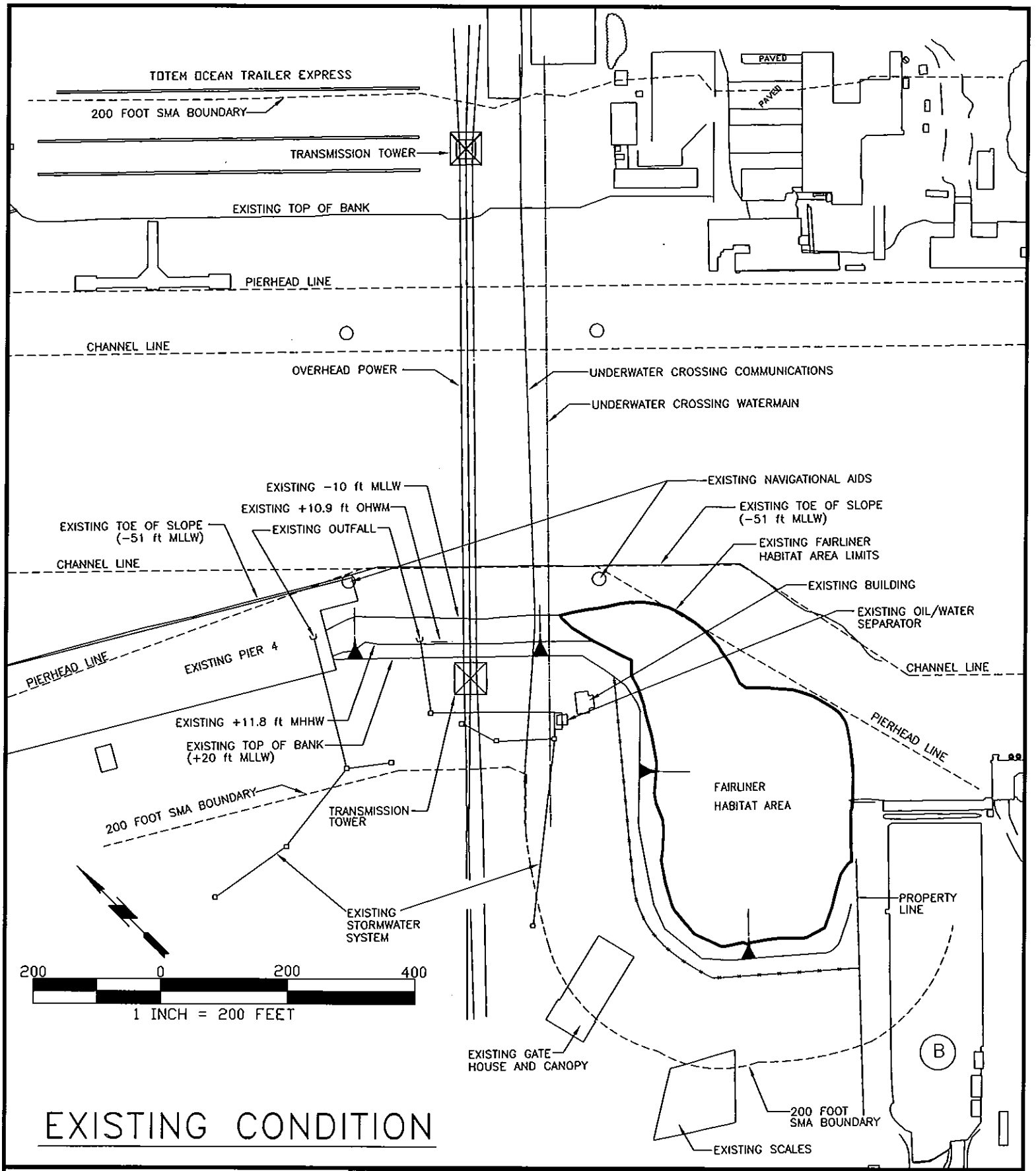

EXISTING CONDITION

PURPOSE: IMPROVE THE BLAIR WATERWAY

DATUM: MLLW = 0.00 FEET (NOS)

ADJACENT PROPOERTY OWNERS

(B) CONCRETE TECH. INC.

PORT OF TACOMA U.S.A.

PORT OF TACOMA

P.O. BOX 1837 TACOMA, WASHINGTON 98401
(253) 383-5841

BLAIR WATERWAY INFRASTRUCTURE IMPROVEMENTS PROJECT

200400818

IN: BLAIR WATERWAY
AT: PORT OF TACOMA
COUNTY OF: PIERCE STATE: WA
APPLICATION BY: PORT OF TACOMA

SHEET NO. 13 OF 21 DATE: 11/24/04

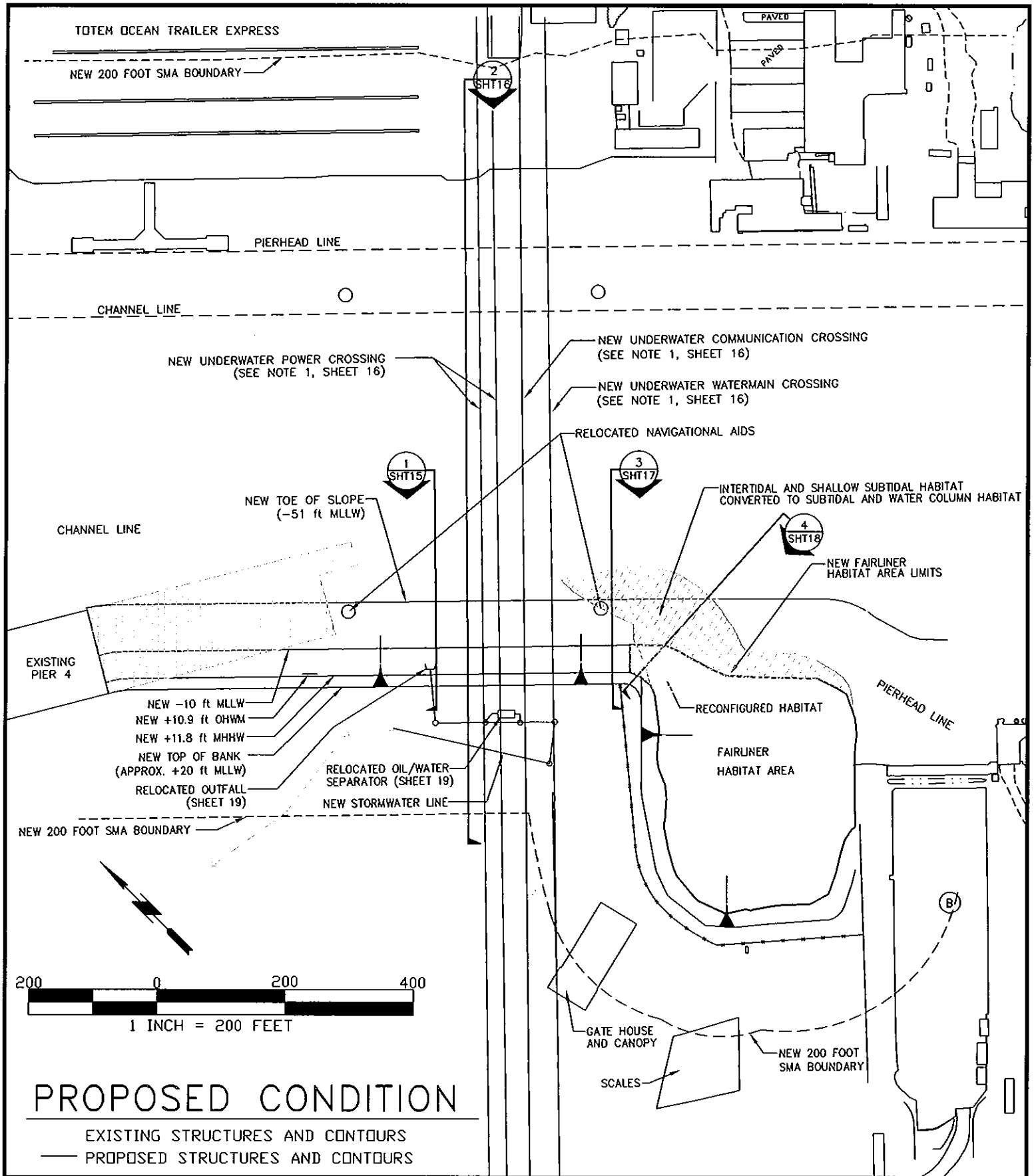

PROPOSED CONDITION

EXISTING STRUCTURES AND CONTOURS

—— PROPOSED STRUCTURES AND CONTOURS

PURPOSE: IMPROVE THE BLAIR WATERWAY

DATUM: MLLW = 0.00 FEET (NOS)

ADJACENT PROPOERTY OWNERS

(8) CONCRETE TECH. INC.

PORT of TACOMA U.S.A.

PORT OF TACOMA

P.O. BOX 1837 TACOMA, WASHINGTON 98401
(253) 383-5841

BLAIR WATERWAY INFRASTRUCTURE IMPROVEMENTS PROJECT

200400818

IN: BLAIR WATERWAY
AT: PORT OF TACOMA
COUNTY OF: PIERCE STATE: WA
APPLICATION BY: PORT OF TACOMA

SHEET NO. 14 OF 21 DATE: 11/24/04

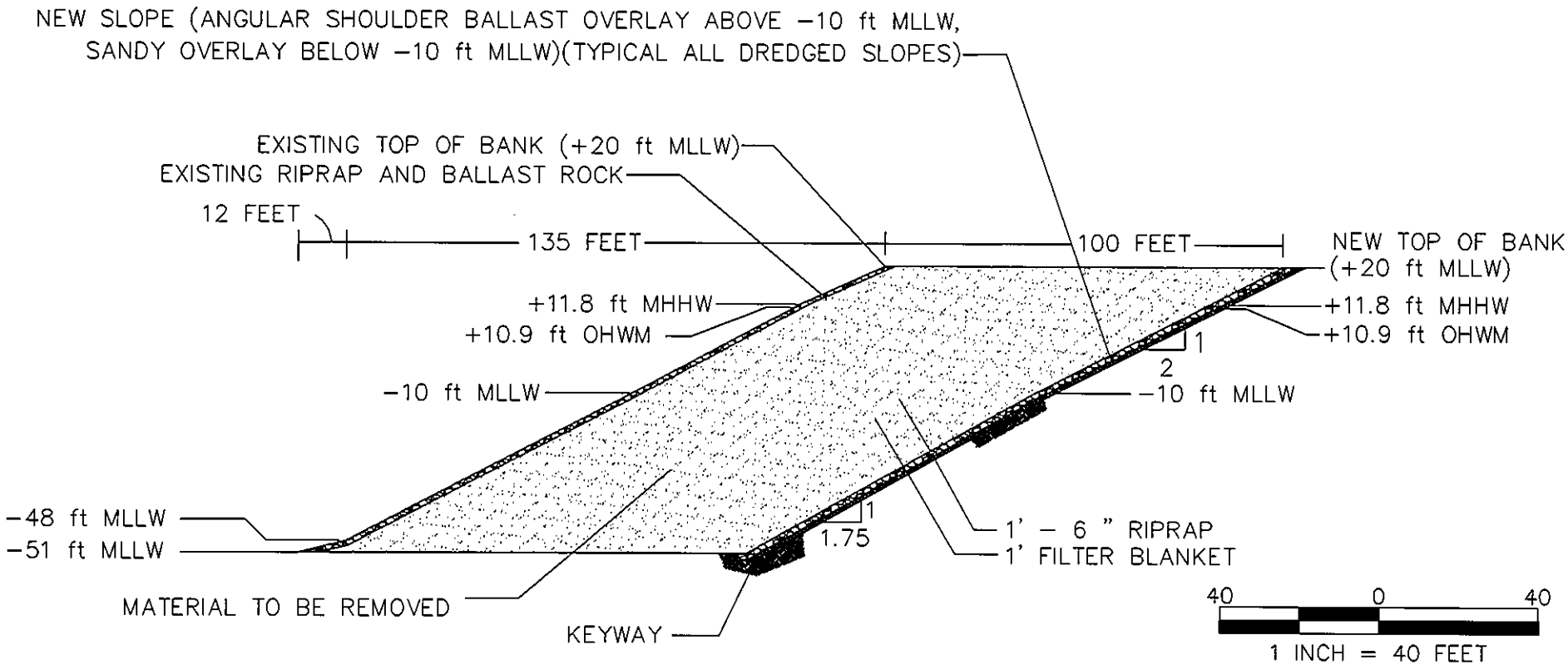

1
SHT14

BLAIR BRIDGE REACH SECTION − SHORELINE CUTBACK AREA

PURPOSE: IMPROVE THE BLAIR WATERWAY

DATUM: MLLW = 0.00 FEET (NOS)

PORT OF TACOMA U.S.A.

PORT OF TACOMA
P.O. BOX 1837 TACOMA, WASHINGTON 98401
(253) 383-5841

BLAIR WATERWAY INFRASTRUCTURE
IMPROVEMENTS PROJECT
200400818

IN: BLAIR WATERWAY
AT: PORT OF TACOMA
COUNTY OF: PIERCE STATE: WA
APPLICATION BY: PORT OF TACOMA

SHEET NO. 15 OF 21 DATE: 11/24/04

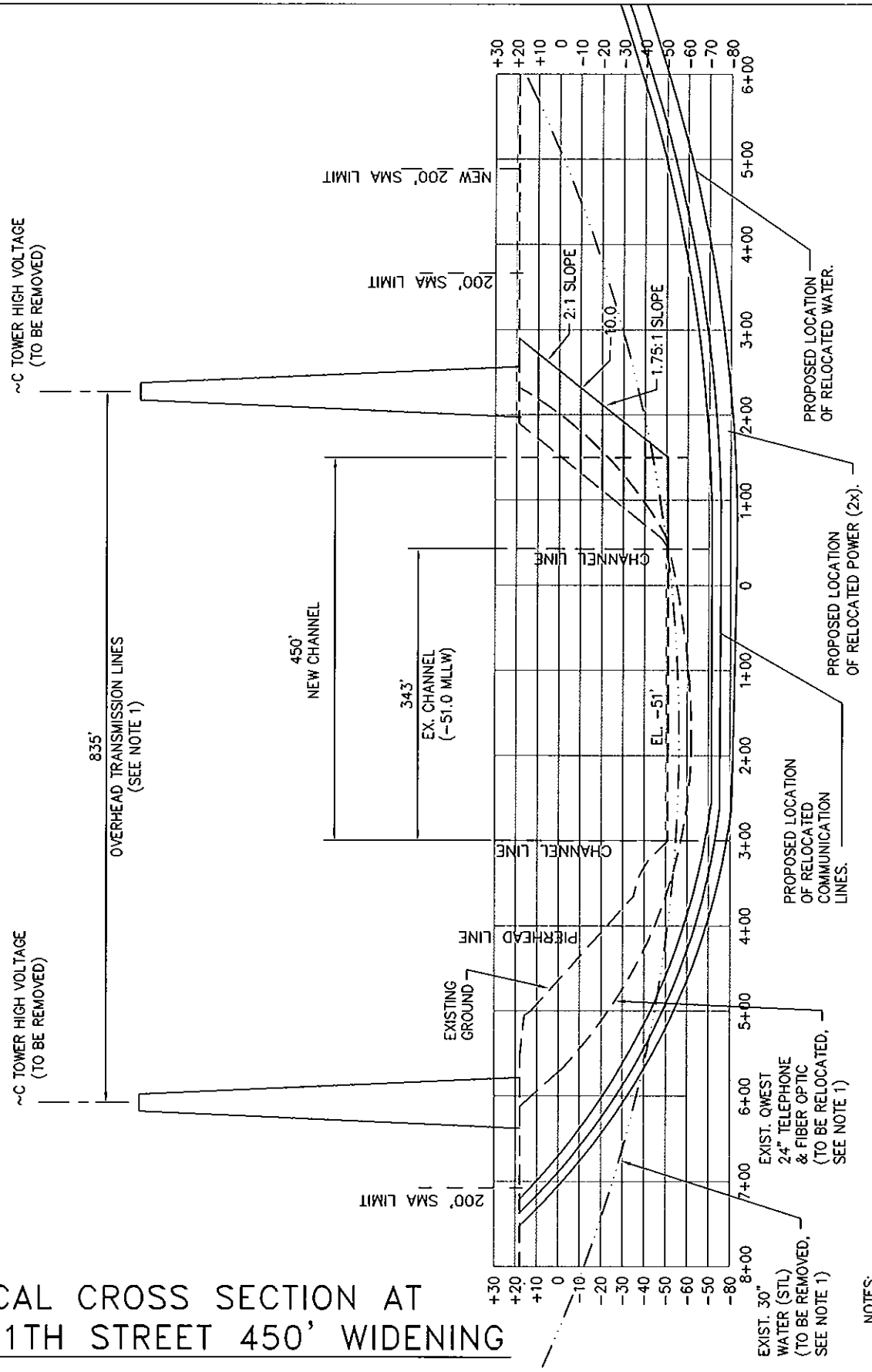

2
SHT14

TYPICAL CROSS SECTION AT EAST 11TH STREET 450' WIDENING

NOTES:

1. COMMUNICATIONS, WATER, AND POWER WILL BE RELOCATED UNDER THE WATERWAY VIA SEPARATE DIRECTIONAL BORING OPERATIONS AS PART OF A SEPARATE PERMIT ACTION.
2. WIDTH OF EXISTING COE CHANNEL IS BASED ON CORPS DRAWING E-3-6-58 AT -51 MLLW.
3. VERTICAL DATUM IS MLLW (NOS)

PURPOSE: IMPROVE THE BLAIR WATERWAY

DATUM: MLLW = 0.00 FEET (NOS)

PORT of TACOMA U.S.A.

PORT OF TACOMA
P.O. BOX 1837 TACOMA, WASHINGTON 98401
(253) 383-5841

BLAIR WATERWAY INFRASTRUCTURE IMPROVEMENTS PROJECT

200400818

IN: BLAIR WATERWAY
AT: PORT OF TACOMA
COUNTY OF: PIERCE STATE: WA
APPLICATION BY: PORT OF TACOMA

SHEET NO. 16 OF 21 DATE: 11/24/04

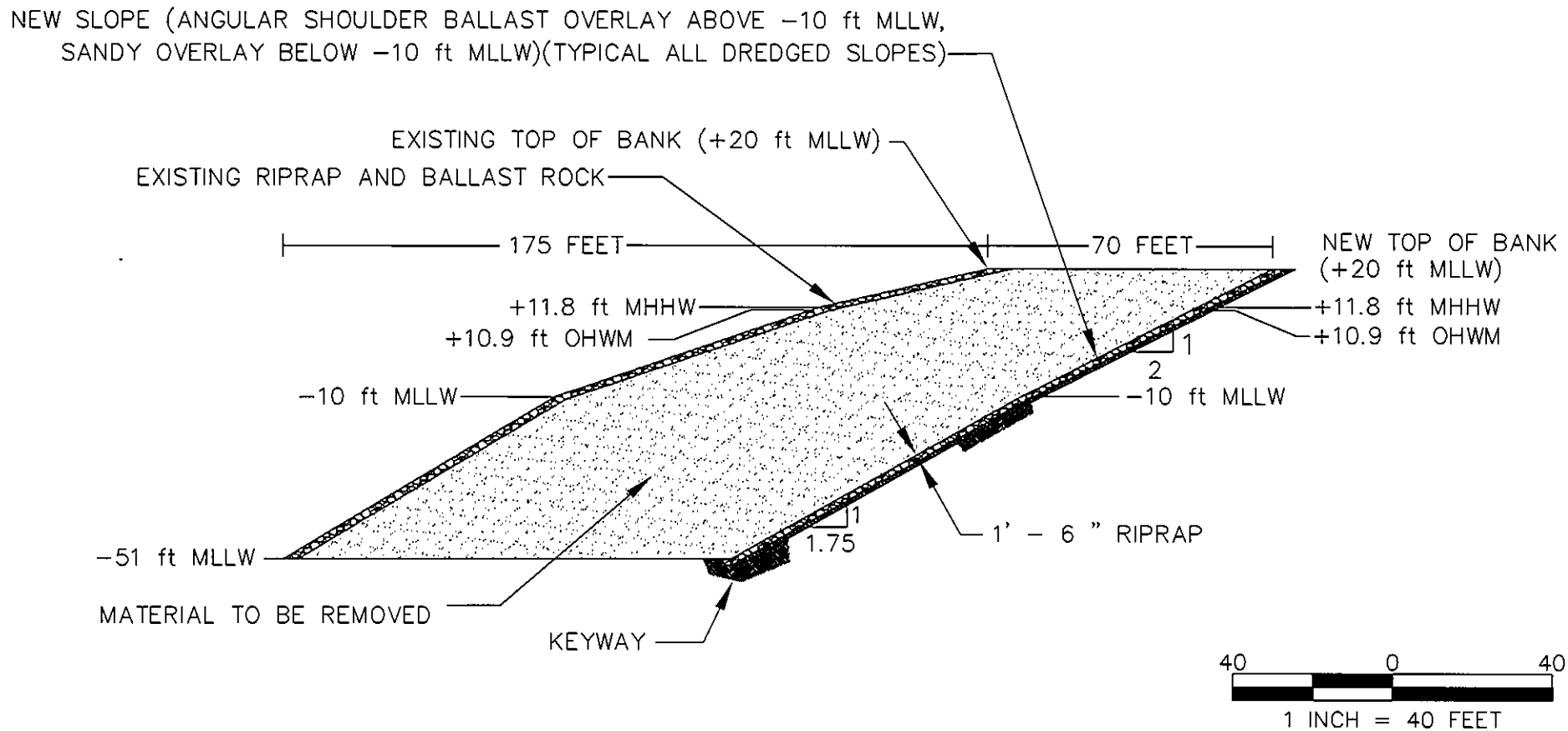

3
SHT14

BLAIR BRIDGE REACH SECTION – FAIRLINER HABITAT AREA

PURPOSE: IMPROVE THE BLAIR WATERWAY

DATUM: MLLW = 0.00 FEET (NOS)

PORT OF TACOMA U.S.A.

PORT OF TACOMA
P.O. BOX 1837 TACOMA, WASHINGTON 98401
(253) 383-5841

BLAIR WATERWAY INFRASTRUCTURE
IMPROVEMENTS PROJECT
200400818

IN: BLAIR WATERWAY
AT: PORT OF TACOMA
COUNTY OF: PIERCE STATE: WA
APPLICATION BY: PORT OF TACOMA

SHEET NO. 17 OF 21 DATE: 11/24/04

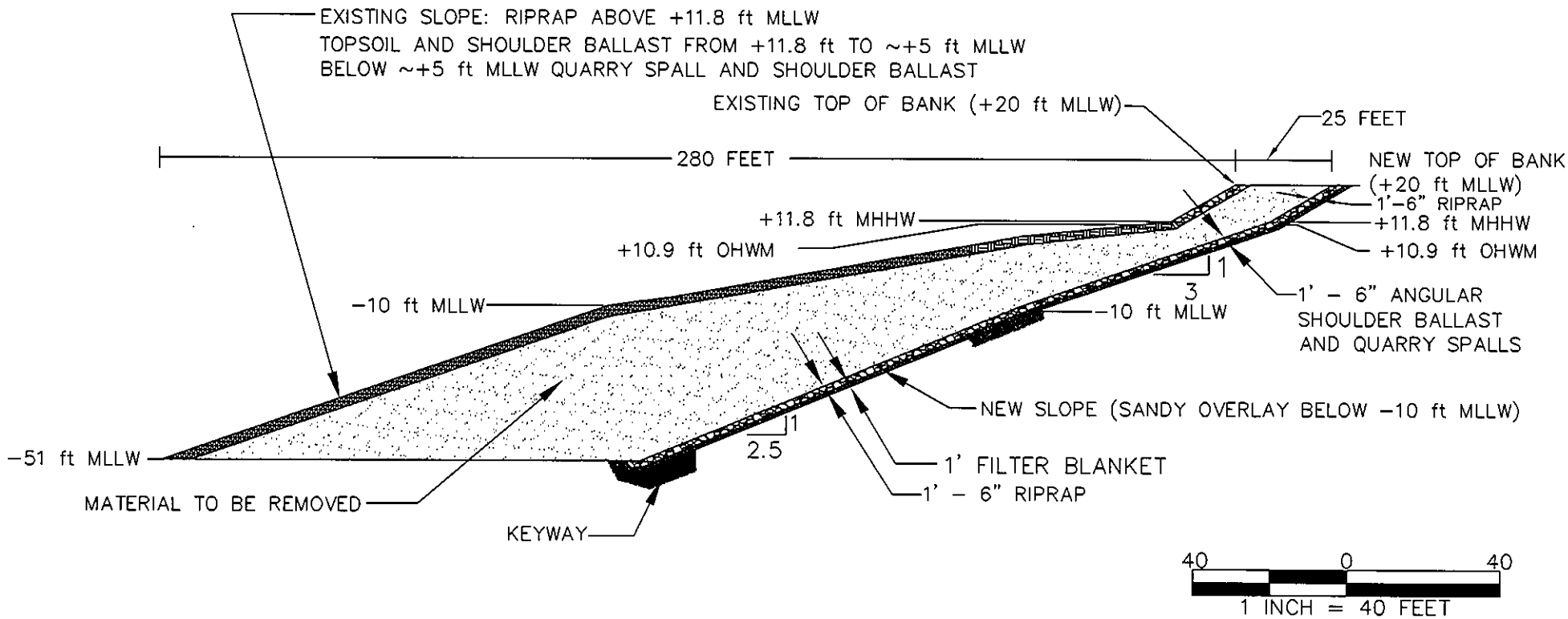

4
SHT14

BLAIR BRIDGE REACH SECTION – FAIRLINER HABITAT AREA

PURPOSE: IMPROVE THE BLAIR WATERWAY

DATUM: MLLW = 0.00 FEET (NOS)

PORT OF TACOMA U.S.A.

PORT OF TACOMA
P.O. BOX 1837 TACOMA, WASHINGTON 98401
(253) 383-5841

BLAIR WATERWAY INFRASTRUCTURE
IMPROVEMENTS PROJECT
200400818

IN: BLAIR WATERWAY
AT: PORT OF TACOMA
COUNTY OF: PIERCE STATE: WA
APPLICATION BY: PORT OF TACOMA

SHEET NO. 18 OF 21 DATE: 11/24/04

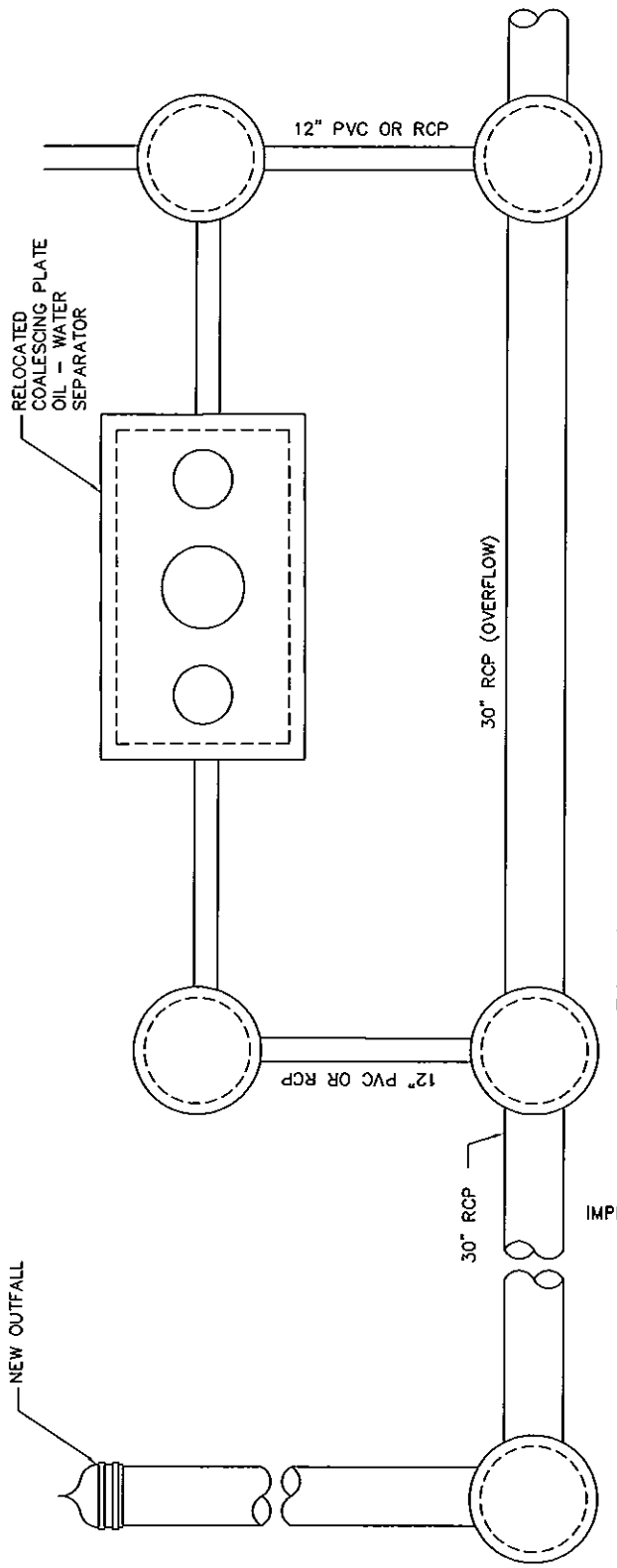

PLAN - NEW OUTFALL AND RELOCATED O/W SEPARATOR

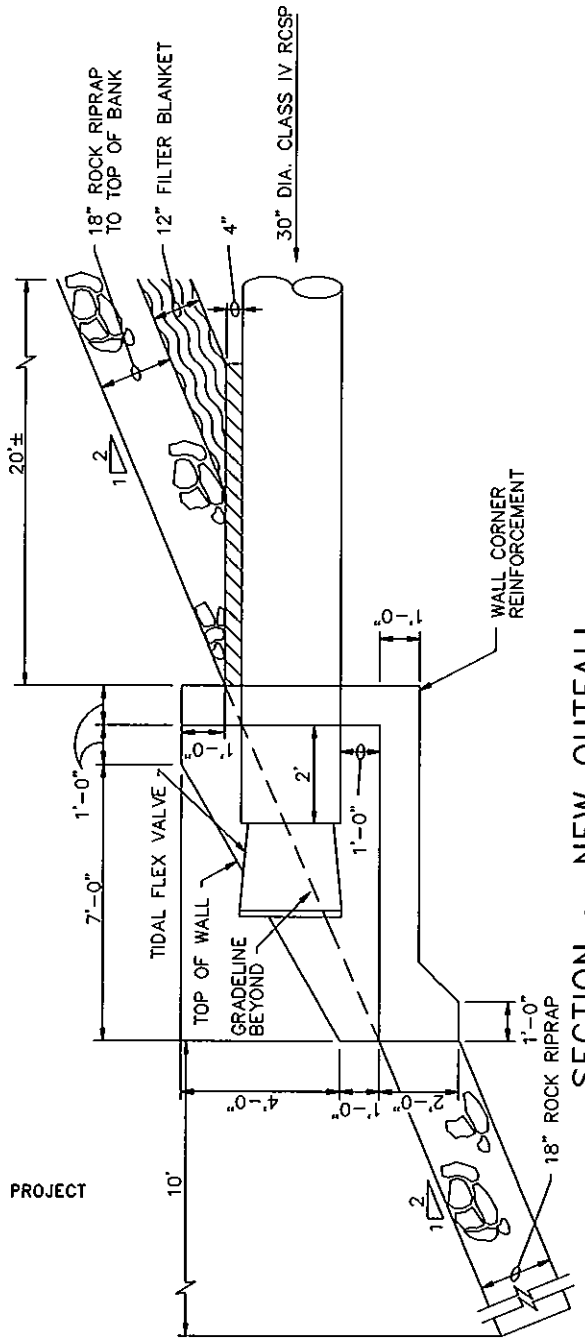

SECTION - NEW OUTFALL

PURPOSE: IMPROVE THE BLAIR WATERWAY

DATUM: MLLW = 0.00 FEET (NOS)

ADJACENT PROPERTY OWNERS:

PORT OF TACOMA U.S.A.

PORT OF TACOMA
P.O. BOX 1837 TACOMA, WASHINGTON 98401
(253) 383-5841

BLAIR WATERWAY INFRASTRUCTURE IMPROVEMENTS PROJECT
200400818
IN: BLAIR WATERWAY
AT: PORT OF TACOMA
COUNTY OF: PIERCE STATE: WA
APPLICATION BY: PORT OF TACOMA

SHEET NO. 19 OF 21 DATE: 11/24/04

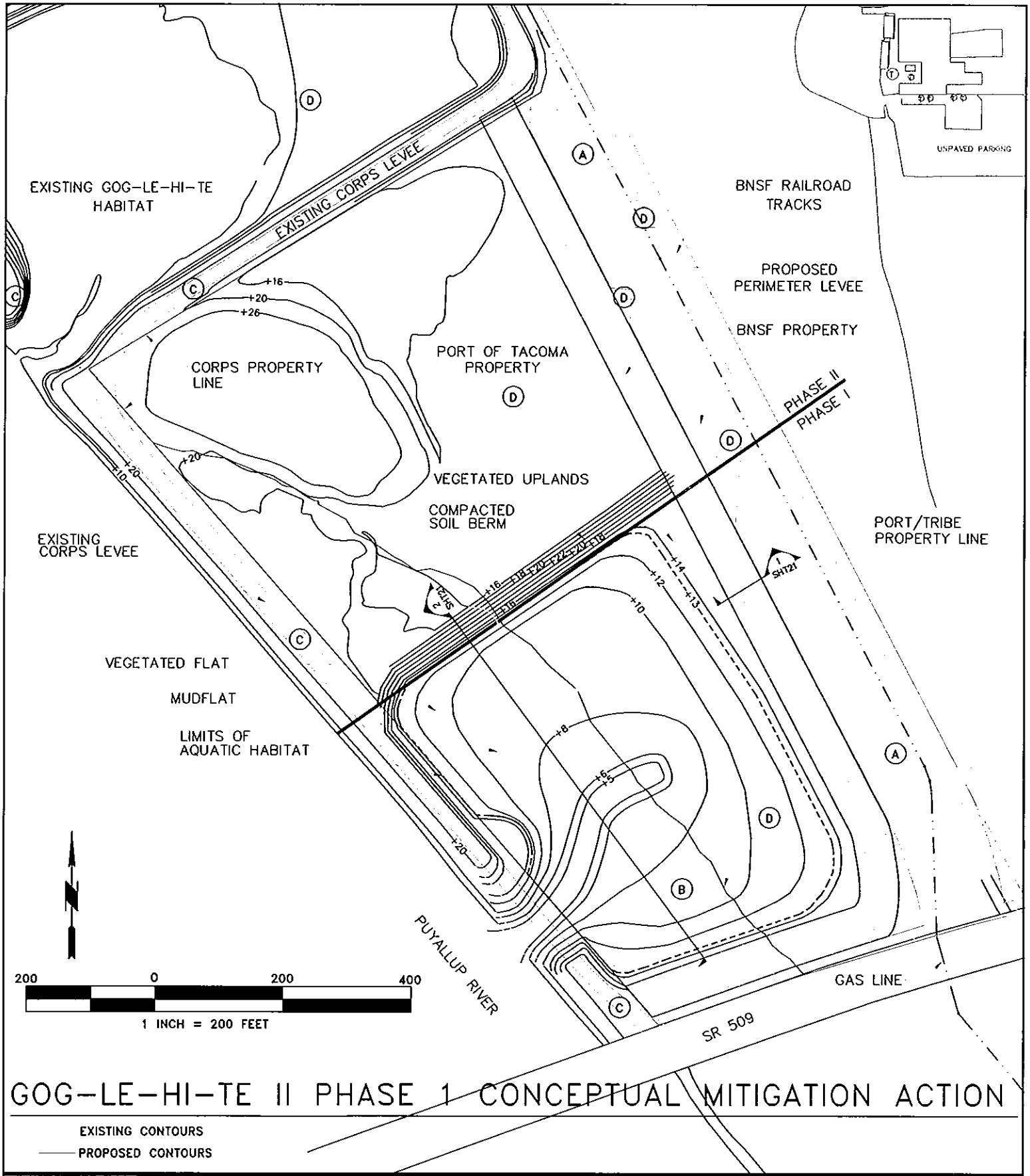

GOG-LE-HI-TE II PHASE 1 CONCEPTUAL MITIGATION ACTION

EXISTING CONTOURS
PROPOSED CONTOURS

PURPOSE: IMPROVE THE BLAIR WATERWAY
DATUM: MLLW = 0.00 FEET (NOS)
ADJACENT PROPERTY OWNERS

- (A) BURLINGTON NORTHERN SANTE FE (BNSF)
- (B) PUYALLUP TRIBE OF INDIANS
- (C) US ARMY CORPS OF ENGINEERS
- (D) PORT OF TACOMA

PORT of TACOMA U.S.A.

PORT OF TACOMA
P.O. BOX 1837 TACOMA, WASHINGTON 98401
(253) 383-5841

BLAIR WATERWAY INFRASTRUCTURE IMPROVEMENTS PROJECT

200400818

IN: BLAIR WATERWAY
AT: PORT OF TACOMA
COUNTY OF: PIERCE STATE: WA
APPLICATION BY: PORT OF TACOMA

SHEET NO. 20 OF 21 DATE: 11/24/04

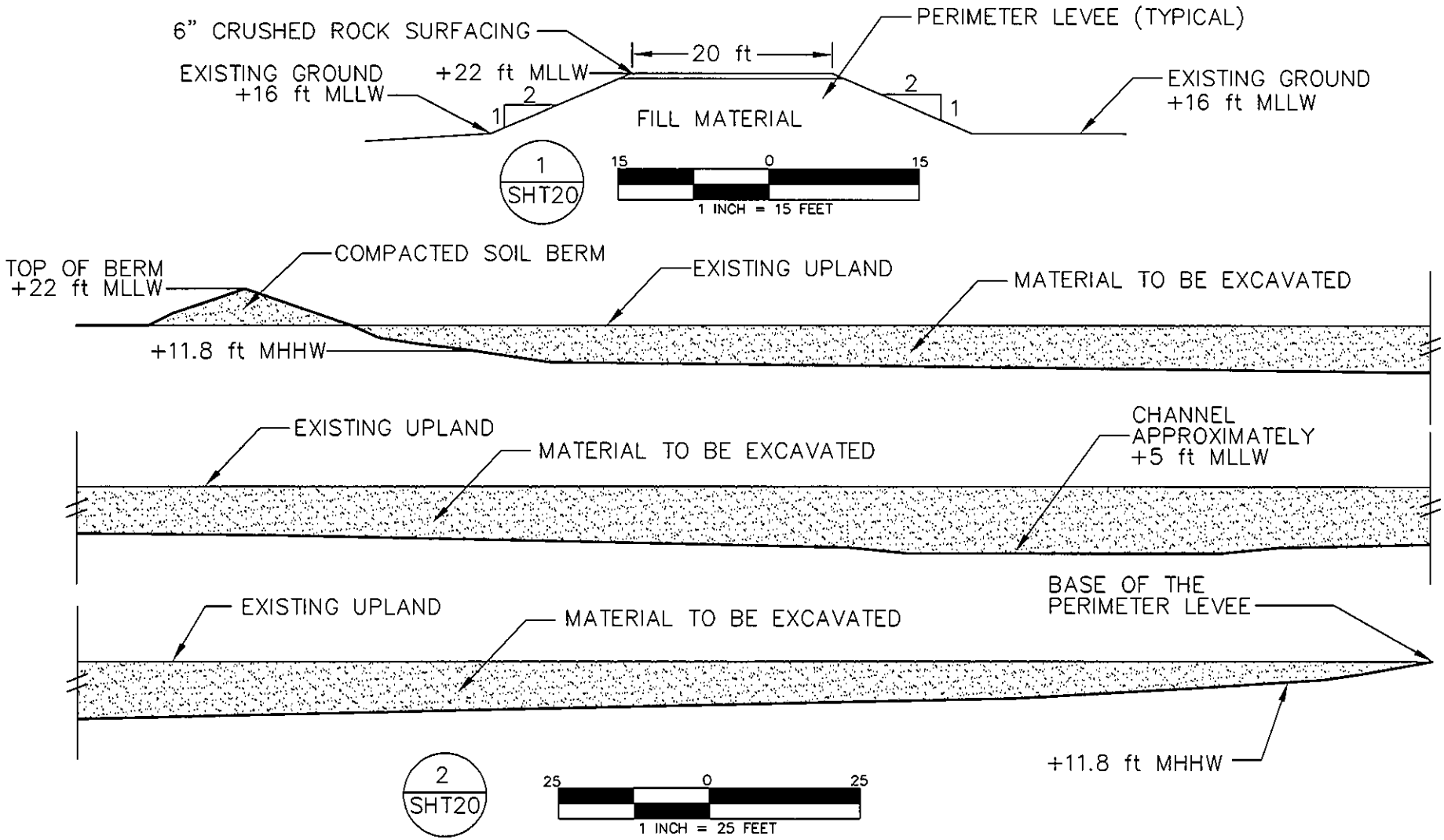

GOG-LE-HI-TE II PHASE 1 CROSS SECTION

PURPOSE: IMPROVE THE BLAIR WATERWAY

DATUM: MLLW = 0.00 FEET (NOS)

PORT of TACOMA U.S.A.

PORT OF TACOMA
P.O. BOX 1837 TACOMA, WASHINGTON 98401
(253) 383-5841

BLAIR WATERWAY INFRASTRUCTURE
IMPROVEMENTS PROJECT

200400818

IN: BLAIR WATERWAY
AT: PORT OF TACOMA
COUNTY OF: PIERCE STATE: WA
APPLICATION BY: PORT OF TACOMA

SHEET NO. 21 OF 21 DATE: 11/24/04

STATE OF WASHINGTON
DEPARTMENT OF ECOLOGY
P.O. Box 47600 • Olympia, Washington 98504-7600
(360) 407-6000 • TDD Only (Hearing Impaired) (360) 407-6006

STATE OF WASHINGTON
DEPARTMENT OF ECOLOGY

Notice of Application for
Water Quality Certification
and for
Certification of Consistency with the
Washington Coastal Zone Management Program

Date: January 21, 2005

Notice is herby given that a request has been filed with the Department of Ecology, pursuant to the requirements of Section 401 of the federal Clean Water Act of 1977 (PL 95-217), to certify that the project described in the U.S. Army Corps of Engineers Public Notice No. 200400818 will comply with the Sections 301, 302, 303, 306, and 307 of the Act, and with applicable provisions of State and Federal water pollution control laws.

Notice is herby given that a request has been filed with the Department of Ecology, pursuant to the requirements of Section 307© of the Federal Coastal Zone Management Act of 1972 (16 U.S.C. 1451), to certify that the above referenced project will comply with the Washington State Coastal Zone Management Program and that the project will be conducted in a manner consistent with that program.

Any person desiring to present views on the project pertaining to the project on either or both (1) compliance with water pollution control laws or (2) the project's compliance or consistency with the Washington State Coastal Zone Management Program may do so by providing written comments within 30 days of the above publication date to:

Federal Permit Coordinator
Department of Ecology
SEA Program
Post Office Box 47600
Olympia, Washington 98504-7600