US Army Corps
of Engineers
Seattle District

Public Notice of Application for Permit

Regulatory Branch
Post Office Box 3755
Seattle, Washington 98124-3755
Telephone (206) 764-3495
ATTN: Susan Powell, Project Manager

Public Notice Date: October 18, 2004
Expiration Date: November 18, 2004
Reference: 200401121
Name: Hobart Properties Trust

Interested parties are hereby notified that an application has been received for a Department of the Army permit in accordance with Section 10 of the Rivers and Harbors Act of March 3, 1899, for certain work described below and shown on the enclosed drawings.

APPLICANT – Hobart Properties Trust
250 West Perimeter Road
Renton, Washington 98055
Telephone: (425) 204-2061

AGENT - Waterfront Construction, Incorporated
Mr. David Douglas
205 Northeast Northlake Way, Suite 230
Seattle, Washington 98105
Telephone: (206) 548-9800

LOCATION – In Lake Washington at Mercer Island, Washington

WORK – Construct a pier, and install a boatlift and seaplane lift.

PURPOSE – Provide private moorage and recreational access to the lake.

ADDITIONAL INFORMATION – An existing 6 by 59 foot concrete pier will be removed; and a shoreline-planting plan will be implemented as in drawing sheet 7 of 7.

ENDANGERED SPECIES - The Endangered Species Act (ESA) of 1973, as amended, requires assessment of potential impacts to listed and proposed species. The Puget Sound chinook salmon *(Oncorhynchus tshawytscha)* threatened, Puget Sound bull trout *(Salvelinus confluentus)* threatened, and bald eagle *(Haliaeetus leucocephalus)* threatened in the state of Washington, may occur in the proposed project area. After receipt of comments from this public notice, the U.S. Army Corps of Engineers (Corps) will evaluate the potential impacts to the Chinook, bull trout, and bald eagle

ESSENTIAL FISH HABITAT - The Magnuson-Stevens Fishery Conservation and Management Act (MSA), as amended by the Sustainable Fisheries Act of 1996, requires all Federal agencies to consult with the National Marine Fisheries Service (NMFS) on all actions, or proposed actions, permitted, funded, or undertaken by the agency, that may adversely affect Essential Fish Habitat (EFH). EFH for Pacific salmon occurs in the project area. The proposed action would impact approximately 0.03 acres of EFH for these species.

If the Corps determines that the proposed action may adversely affect EFH for federally managed fisheries in Washington waters, the Corps will initiate EFH consultation with the NMFS. The Corps' final determination relative to project impacts and the need for mitigation measures is subject to review by and coordination with the NMFS.

CULTURAL RESOURCES - The District Engineer (DE) has reviewed the latest published version of the National Register of Historic Places, lists of properties determined eligible and other sources of information. The following is current knowledge of the presence or absence of historic properties and the effects of the undertaking upon these properties:

There are no recorded historic properties within the permit area. The permit area has been so extensively modified by modern development that little likelihood exists for the proposed project to impinge upon an undisturbed historic property.

The DE invites responses to this public notice from Native American Nations or tribal governments, Federal, State, and local agencies, historical and archeological societies, and other parties likely to have knowledge of or concerns with historic properties in the area.

PUBLIC HEARING - Any person may request, in writing, within the comment period specified in this notice, that a public hearing be held to consider this application. Requests for public hearings shall state, with particularity, the reasons for holding a public hearing.

EVALUATION - The decision whether to issue a permit will be based on an evaluation of the probable impact, including cumulative impacts of the proposed activity on the public interest. That decision will reflect the national concern for both protection and utilization of important resources. The benefits, which reasonably may be expected to accrue from the proposal, must be balanced against its reasonably foreseeable detriments. All factors which may be relevant to the proposal will be considered, including the cumulative effects thereof; among those are conservation, economics, aesthetics, general environmental concerns, wetlands, historic properties, fish and wildlife values, flood hazards, floodplain values, land use, navigation, shoreline erosion and accretion, recreation, water supply and conservation, water quality, energy needs, safety, food and fiber production, mineral needs, considerations of property ownership, and, in general, the needs and welfare of the people.

The Corps is soliciting comments from the public; Federal, Native American Nations or tribal governments, State, and local agencies and officials; and other interested parties in order to consider and evaluate the impacts of this activity. Any comments received will be considered by the Corps to determine whether to issue, modify, condition or deny a permit for the work. To make this decision, comments are used to assess impacts on endangered species, historic properties, water quality, general environmental effects, and the other public interest factors listed above. Comments are used in the preparation of an Environmental Assessment and/or an Environmental Impact Statement pursuant to the National Environmental Policy Act. Comments are also used to determine the need for a public hearing and to determine the overall public interest of the activity.

ADDITIONAL EVALUATION - The State of Washington is reviewing this work for consistency with the approved Washington Coastal Zone Management Program.

This proposal is the subject of Shorelines Substantial Development Permit No. SHL04-018 being processed by the city of Mercer Island.

COMMENT AND REVIEW PERIOD – Conventional mail or e-mail comments on this public notice will be accepted and made part of the record and will be considered in determining whether it would be in the

public interest to authorize this proposal. In order to be accepted, e-mail comments must originate from the author's e-mail account and must include on the subject line of the e-mail message the permit applicant's name and reference number as shown below. All e-mail comments should be sent to Susan.M.Powell@nws02.usace.army.mil. Conventional mail comments should be sent to U.S. Army Corps of Engineers, Regulatory Branch, Post Office Box 3755, Seattle, Washington 98124-3755. Both conventional mail or e-mail comments must include the permit applicant's name and reference number, as shown below, and the commentor's name, address, and phone number. All comments whether conventional mail or e-mail must reach this office, no later than the expiration date of this public notice to ensure consideration. Please include the following name and reference number:

Hobart Properties Trust
200401121

Encl
Drawings (7)

PROJECT DESIGNED BY:

Waterfront Construction Inc.
205 NE NORTHLAKE WAY, Suite 230
SEATTLE, WA. 98105 (206) 548-9800

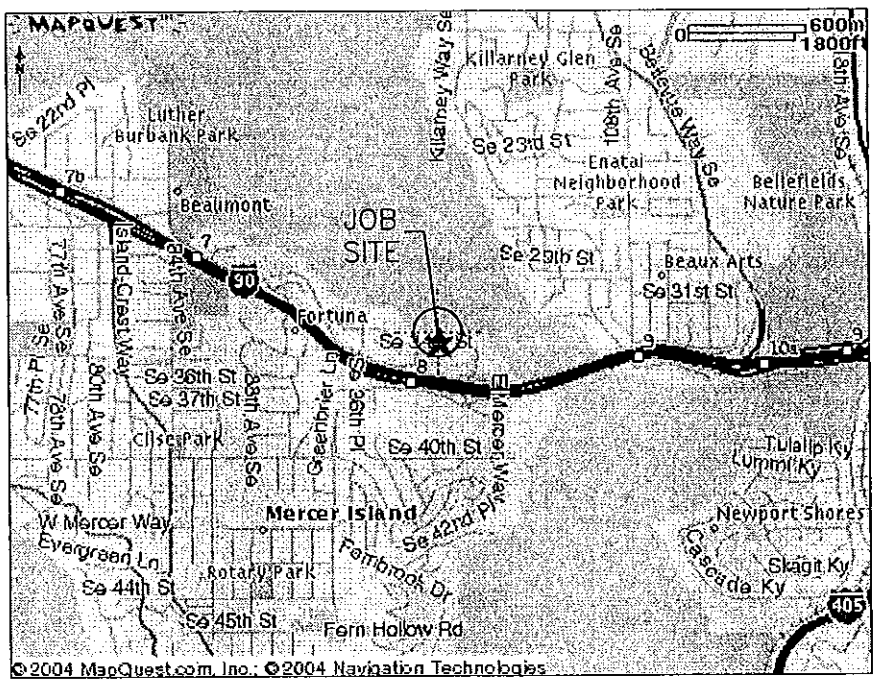

VICINITY MAP/NO SCALE

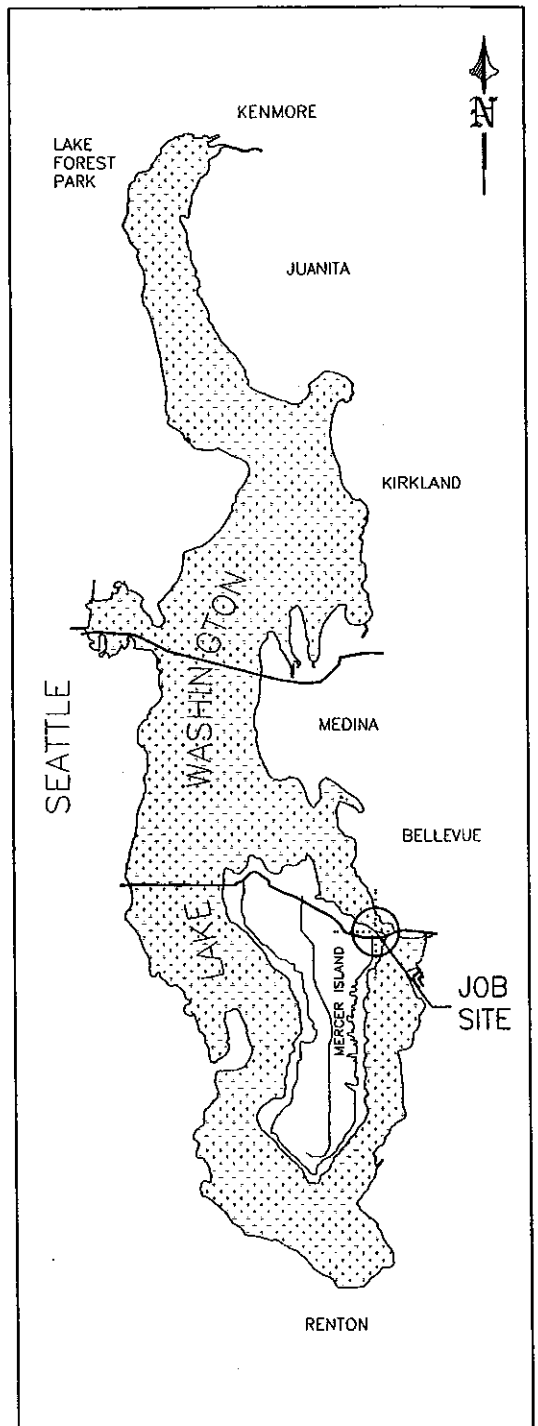

AREA MAP/Scale: 1" = 3miles

3 MILES 0 3 MILES
1 MILE

LEGAL DESCRIPTION

1/4 SEC: SE 07-24N-05E
TAXLOT #: 072405 9038

STR 072405 TAXLOT 38 CONSOLIDATED LOT PER MI LOT CONSOLIDATION FOR NANESS REC # 20010416900004 SD CONSOLIDATION BEING W 100 FT OF E 921.44 FT OF GL 5 LESS S 770 FT

LAT: 47°-34'.53"
LONG: 122°-12'-26"

200401121

ADJACENT OWNERS: ① CITY OF MERCER ISLAND SEWER DISTRICT FRUITLAND LANDING ② NEWMARK ZEPHRON G & SARAH B 3402 97TH AVE SE MERCER ISLAND, WA. 98040	PROPOSED: REMOVE EXISTING PIER AND CONSTRUCT NEW PIER IN NEW LOCATION.	APPLICANT: HOBART PROPERTIES TRUST
		SITE ADD. 3310 97TH AVE SE MERCER ISLAND, WA. 98040
	PURPOSE: PROVIDE PRIVATE MOORAGE	MAIL ADD. P.O. BOX 1479 RENTON, WA. 98057
		DATUM: C.O.E. 0.0' EST. 1919
APPLICATION#:	DWG#: 04-3306-A.1-1	SHEET: 1 OF: 7 DATE: 9-7-04

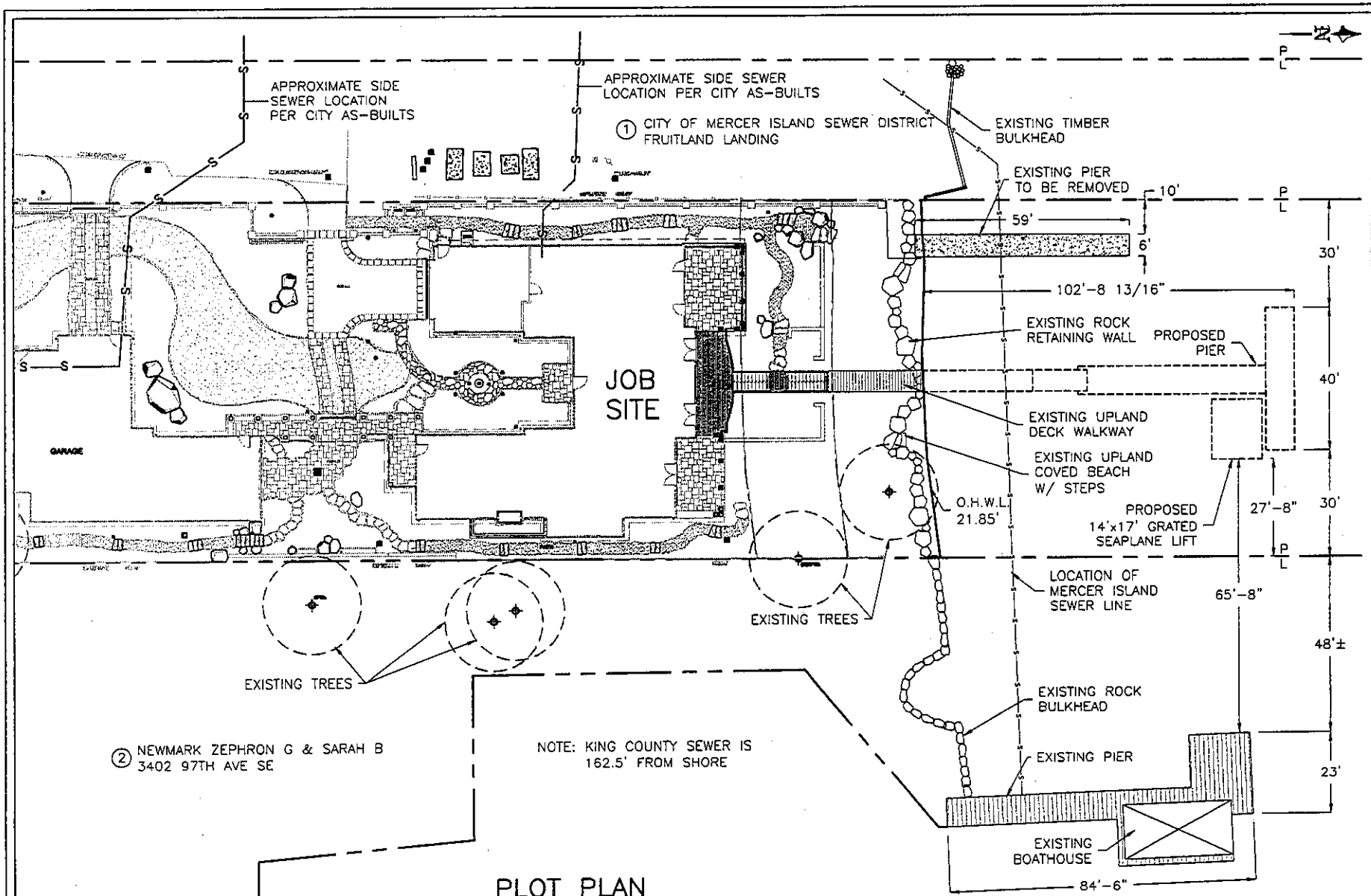

PLOT PLAN

200401121

REMOVE EXISTING PIER (354 S.F.) AND CONSTRUCT AN ALL NEW PIER (990 S.F.) ON NEW PILING, CONSISTING OF A 6'x30' FIXED PIER TO A FULLY GRATED 6'x15' RAMP SECTION, AND A 8'x52' MAIN WALKWAY PIER, EXTENDING TO AN 8'x40' CENTERED END "T". A 14'x17' SEAPLANE LIFT AND A BOATLIFT ARE SITUATED ON THE SOUTHEAST SIDE OF THE WALKWAY PIER. UPON COMPLETION OF THE NEW PIER, REMOVE THE EXISTING 6'x59' CONCRETE PIER AND PILINGS SITUATED AT THE NORTHWEST SIDE OF THE PROPERTY.

PROPOSED: REMOVE EXISTING PIER AND CONSTRUCT NEW PIER IN NEW LOCATION.	
IN: LAKE WASHINGTON	
AT: MERCER ISLAND	APPLICATION#:
APPLICANT: HOBART PROPERTIES TRUST 3310 97TH AVE SE MERCER ISLAND, WA. 98040	
SHEET: 2 OF: 7	
DATE: 9-7-04	DWG#: 04-3306-A.2-1

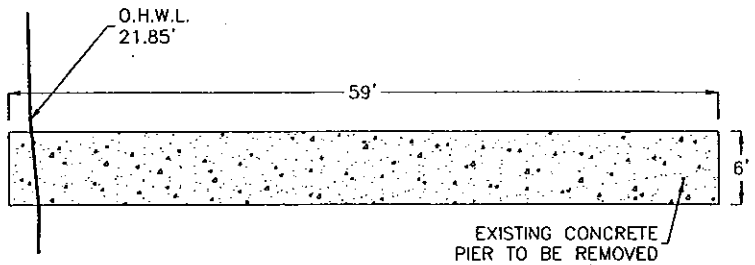

EXISTING DETAIL VIEW

SCALE: 1/16"=1'

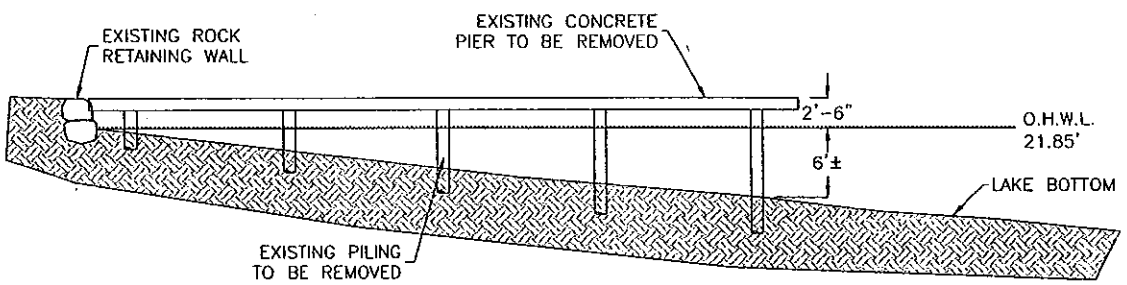

EXISTING ELEVATION VIEW

16' 8' 4' 0' 16'

SCALE: 1/16"=1'

20040121

REMOVE EXISTING PIER (354 S.F.) AND CONSTRUCT AN ALL NEW PIER (990 S.F.) ON NEW PILING, CONSISTING OF A 6'x30' FIXED PIER TO A FULLY GRATED 6'x15' RAMP SECTION, AND A 8'x52' MAIN WALKWAY PIER, EXTENDING TO AN 8'x40' CENTERED END "T". A 14'x17' SEAPLANE LIFT AND A BOATLIFT ARE SITUATED ON THE SOUTHEAST SIDE OF THE WALKWAY PIER. UPON COMPLETION OF THE NEW PIER, REMOVE THE EXISTING 6'x59' CONCRETE PIER AND PILINGS SITUATED AT THE NORTHWEST SIDE OF THE PROPERTY.

PROPOSED: REMOVE EXISTING PIER AND CONSTRUCT NEW PIER IN NEW LOCATION.	
IN: LAKE WASHINGTON	
AT: MERCER ISLAND	APPLICATION#:
APPLICANT: HOBART PROPERTIES TRUST 3310 97TH AVE SE MERCER ISLAND, WA. 98040	
SHEET: 3 OF: 7	
DATE: 9-7-04	DWG#: 04-3306-A.3-1

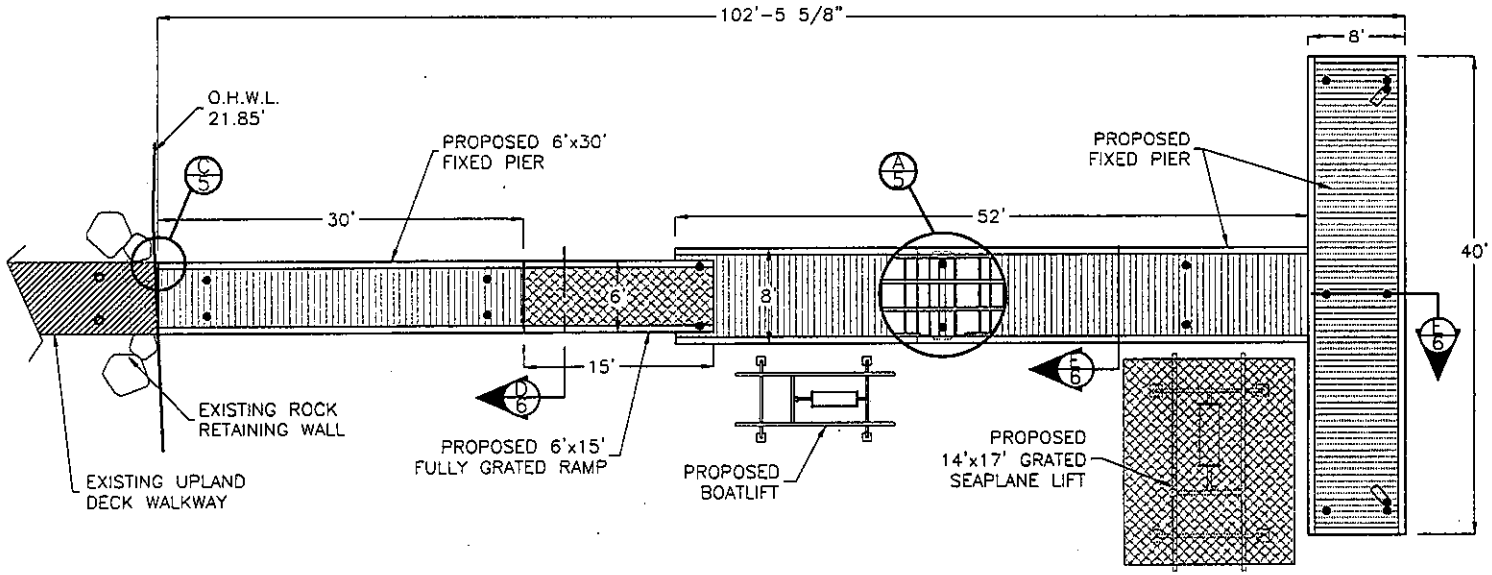

PROPOSED DETAIL VIEW

SCALE: 1/16"=1'

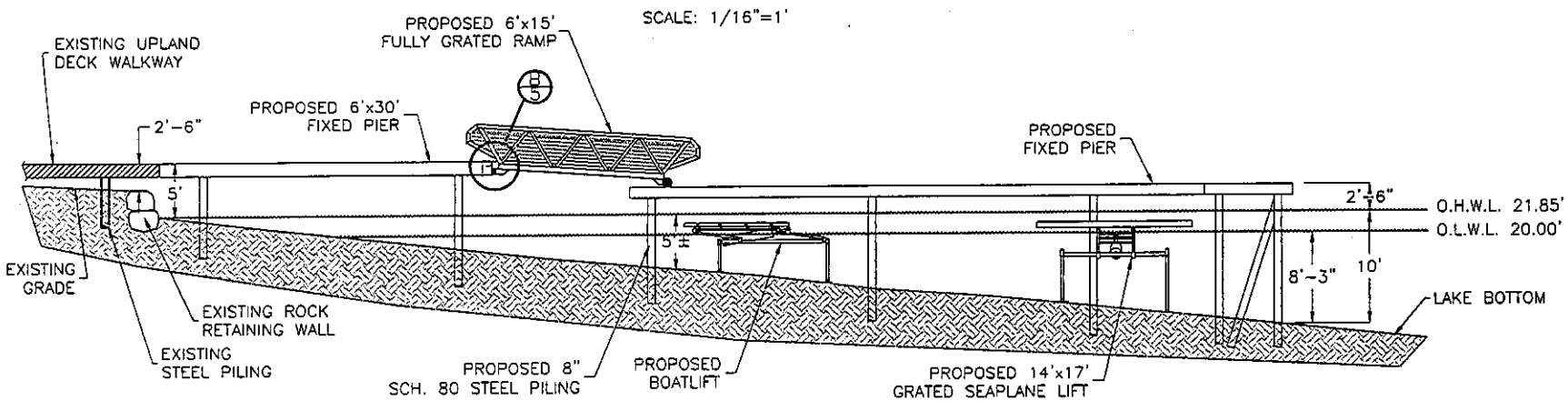

PROPOSED ELEVATION VIEW

16' 8' 4' 0' 16'

SCALE: 1/16"=1'

REMOVE EXISTING PIER (354 S.F.) AND CONSTRUCT AN ALL NEW PIER (990 S.F.) ON NEW PILING, CONSISTING OF A 6'x30' FIXED PIER TO A FULLY GRATED 6'x15' RAMP SECTION, AND A 8'x52' MAIN WALKWAY PIER, EXTENDING TO AN 8'x40' CENTERED END "T". A 14'x17' SEAPLANE LIFT AND A BOATLIFT ARE SITUATED ON THE SOUTHEAST SIDE OF THE WALKWAY PIER. UPON COMPLETION OF THE NEW PIER, REMOVE THE EXISTING 6'x59' CONCRETE PIER AND PILINGS SITUATED AT THE NORTHWEST SIDE OF THE PROPERTY.

200401121

PROPOSED: REMOVE EXISTING PIER AND CONSTRUCT NEW PIER IN NEW LOCATION.	
IN: LAKE WASHINGTON	
AT: MERCER ISLAND	APPLICATION#:
APPLICANT: HOBART PROPERTIES TRUST 3310 97TH AVE SE MERCER ISLAND, WA. 98040	
SHEET: 4 OF: 7	
DATE: 9-7-04	DWG#: 04-3306-A.4-1

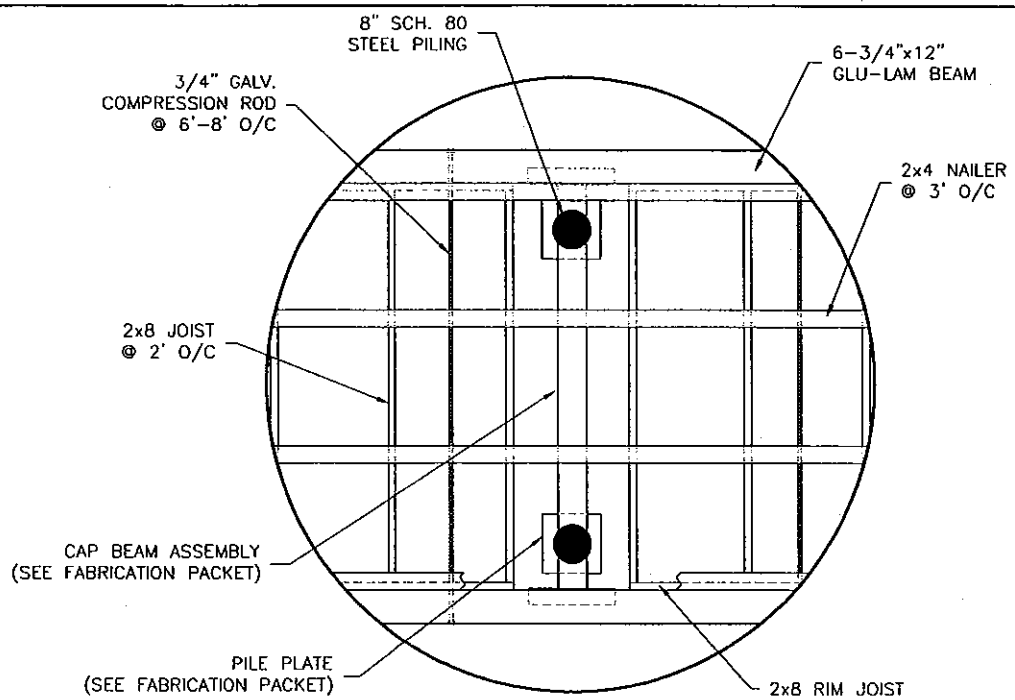

DETAIL A-5

NOT TO SCALE

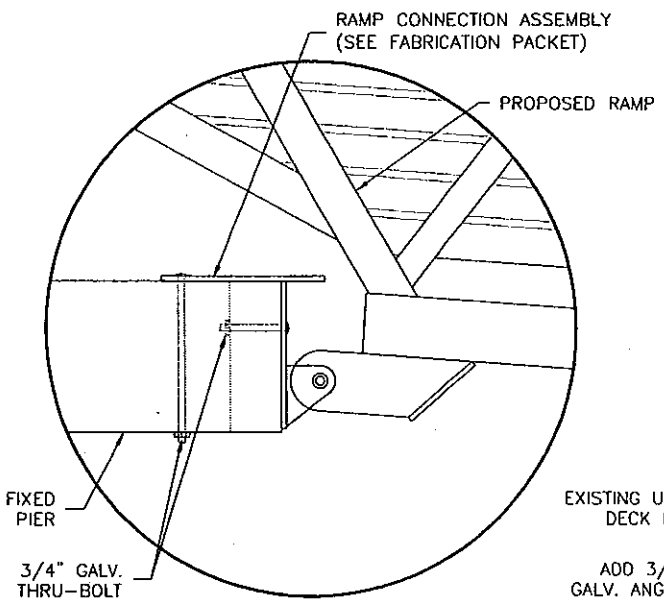

DETAIL B-5

NOT TO SCALE

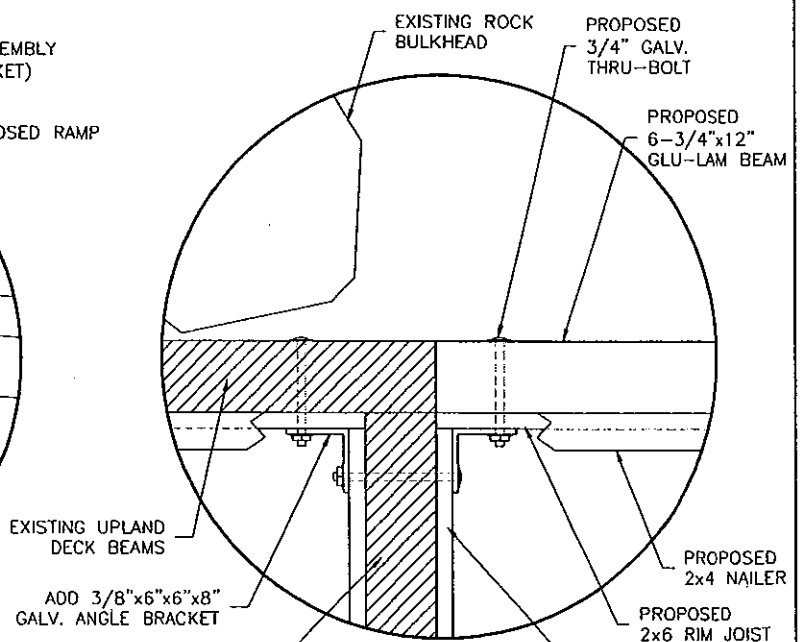

DETAIL C-5

NOT TO SCALE

MATERIAL LIST

PART	SPECS	TREATMENT
PILING	8" SCH. 80	EPOXY COATED
CAPS	W6x15 "I" BEAM	GALVANIZED
GLU-LAMS	6-3/4"x12" 24F-V8	ACZA
JOIST	2"x8" & 2"x6" D.F. #1	ACZA
NAILER	2"x4" DOUG FIR	ACZA
DECKING	2"x6" D.F. #1	ACZA
RIM JOIST	2"x8" & 2"x6" D.F. #1	ACZA
GRATING	MOLDED PLASTIC	NONE

200401121

PROPOSED: REMOVE EXISTING PIER AND CONSTRUCT NEW PIER IN NEW LOCATION.	
IN: LAKE WASHINGTON	
AT: MERCER ISLAND	APPLICATION#:
APPLICANT: HOBART PROPERTIES TRUST 3310 97TH AVE SE MERCER ISLAND, WA. 98040	
SHEET: 5 OF: 7	
DATE: 9-7-04	DWG#: 04-3306-A.5-1

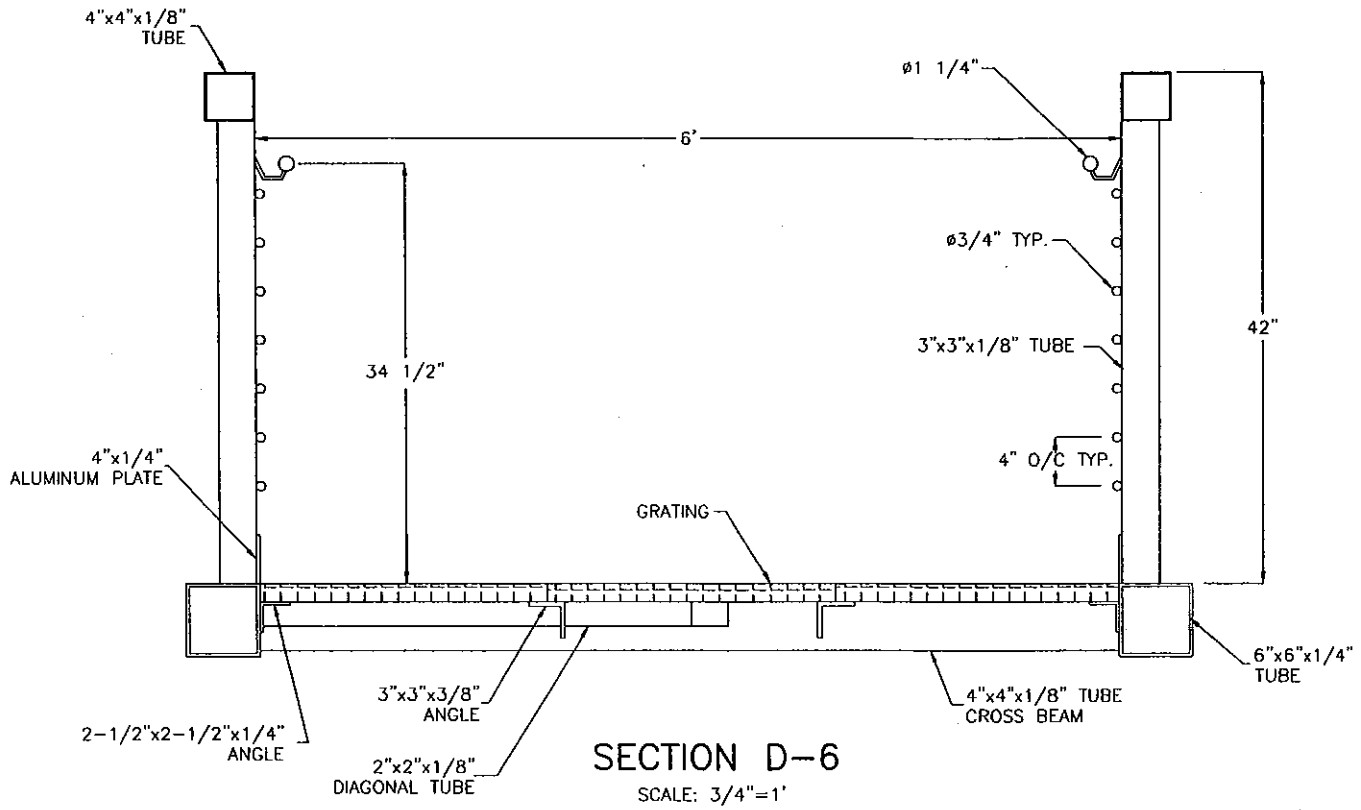

SECTION D-6

SCALE: 3/4"=1'

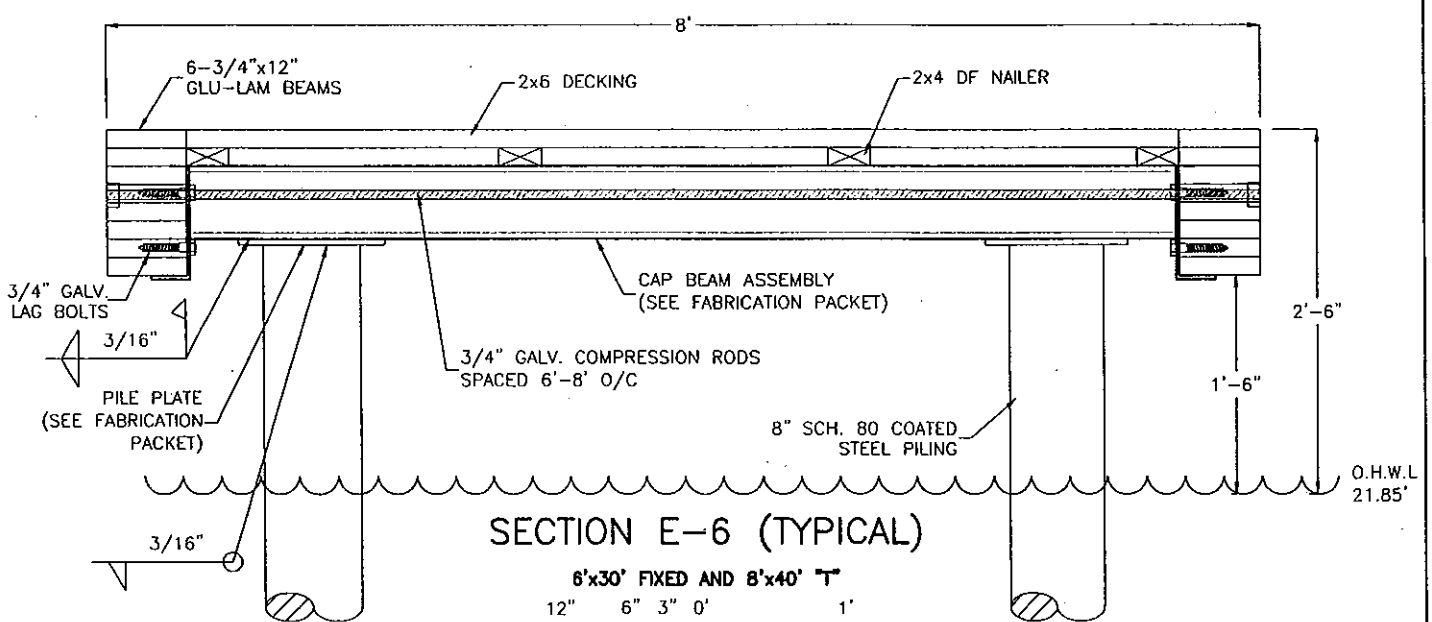

SECTION E-6 (TYPICAL)

6'x30' FIXED AND 8'x40' "T"

12" 6" 3" 0' 1'

SCALE: 3/4"=1'

MATERIAL LIST

PART	SPECS	TREATMENT
PILING	8" SCH. 80	EPOXY COATED
CAPS	W6x15 "I" BEAM	GALVANIZED
GLU-LAMS	6-3/4"x12" 24F-V8	ACZA
JOIST	2"x8" D.F. #1	ACZA
NAILER	2"x4" DOUG FIR	ACZA
DECKING	2"x6" D.F. #1	ACZA
RIM JOIST	2"x8" D.F. #1	ACZA
GRATING	MOLDED PLASTIC	NONE

200401121

PROPOSED: REMOVE EXISTING PIER AND CONSTRUCT NEW PIER IN NEW LOCATION.	
IN: LAKE WASHINGTON	
AT: MERCER ISLAND	APPLICATION#:
APPLICANT: HOBART PROPERTIES TRUST 3310 97TH AVE SE MERCER ISLAND, WA. 98040	
SHEET: 6 OF: 7	
DATE: 9-7-04	DWG#: 04-3306-A.6-1

TREES

SYMBOL	QTY.	BOTANICAL NAME	COMMON NAME	SIZE/SPACING	NOTES
AC	5	ACER CIRCINATUM	VINE MAPLE	6-8' HT.	BALL & BURLAP FULL, MULTI-STEM
TP	7	THUJA PLICATA	WESTERN RED CEDAR	6-8' HT.	BALL & BURLAP FULL, WELL BRANCHED

SHRUBS

SYMBOL	QTY.	BOTANICAL NAME	COMMON NAME	SIZE/SPACING	NOTES
CS	8	CORNUS SERICEA	RED TWIG DOGWOOD	3 GAL.	FULL, WELL ROOTED
DC	15	DESCHAMPSIA CESPITOSA	TUFTED HAIR GRASS	1 GAL.	FULL, WELL ROOTED
PL	8	PHILADELPHUS LEWISII	HOOK ORANGE	3 GAL.	FULL, WELL ROOTED

EMERGENTS

SYMBOL	QTY.		COMMON NAME	SIZE/SPACING	NOTES
SM	35	SCIRPUS MICROCARPA	SMALL FRUITED BULLRUSH	1 GAL.	FULL, WELL ROOTED
IT	32	IRIS TENAX	OREGON IRIS	BULBS AT 18" O.C.	
SL	35	SCIRPUS LACUSTRIS	HARDSTEM BULLRUSH	1 GAL.	FULL, WELL ROOTED

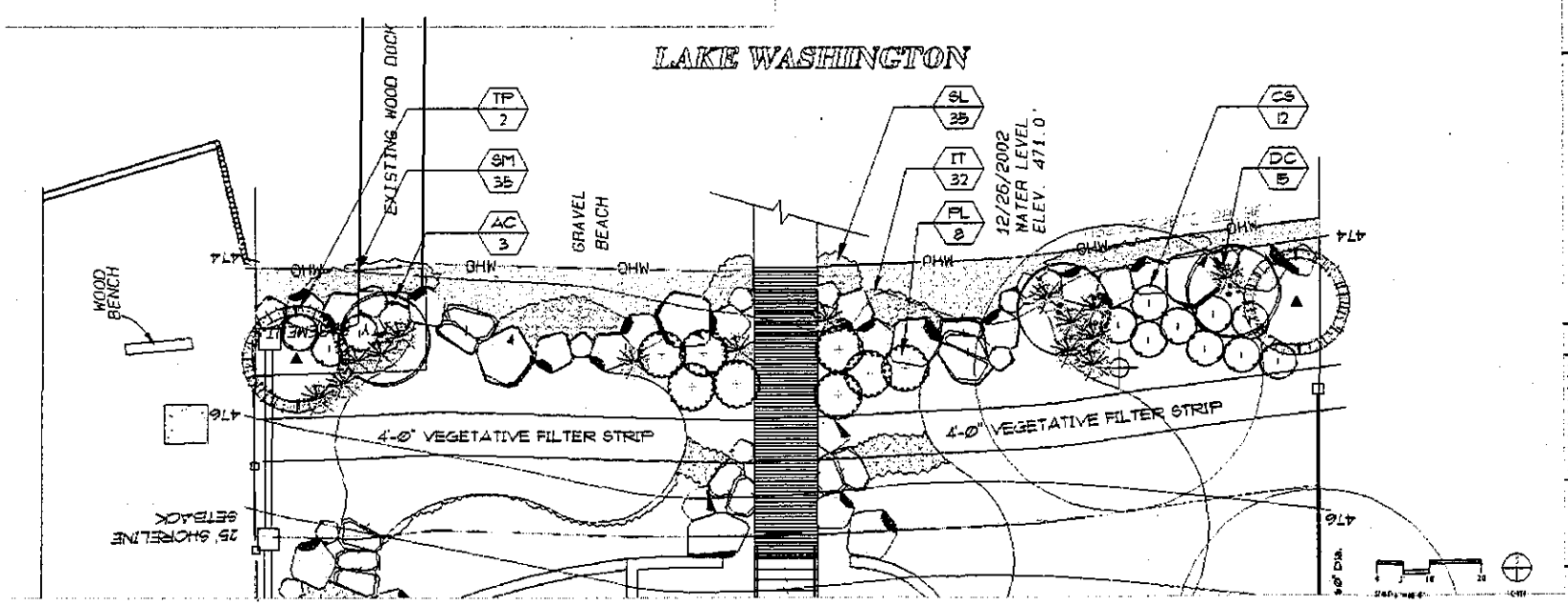

Kenneth philp

HOBART TRUST

PLANTING PLAN

L-1

Figure 7. Proposed native planting plan (prepared by Ken Philp Landscape Architects).

200401121

9-7-04

STATE OF WASHINGTON
DEPARTMENT OF ECOLOGY
P.O. Box 47600 • Olympia, Washington 98504-7600
(360) 407-6000 • TDD Only (Hearing Impaired) (360) 407-6006

STATE OF WASHINGTON
DEPARTMENT OF ECOLOGY

Notice of Application for
Certification of Consistency with the
Washington Coastal Zone Management Program

Date: 10/18/04

Notice is herby given that a request has been filed with the Department of Ecology, pursuant to the requirements of Section 307© of the federal Coastal Zone Management Act of 1972 (16 U.S.C. 1451), to certify that the project described in the U.S. Army Corps of Engineers Public Notice No. 200401121 will comply with the Washington State Coastal Zone Management Program and that the project will be conducted in a manner consistent with that Program.

Any person desiring to present views on the project pertaining to the project's compliance or consistency with the Washington State Coastal Zone Management Program may do so by providing written comments within 30 days of the above publication date to:

Federal Permit Coordinator
Department of Ecology
SEA Program
Post Office Box 47600
Olympia, Washington 98504-7600