US Army Corps
of Engineers
Seattle District

Public Notice of Application for Permit

Regulatory Branch
Post Office Box 3755
Seattle, Washington 98124-3755
Telephone (206) 764-3495
ATTN: Debbie Knaub, Project Manager

Public Notice Date: December 16, 2004
Expiration Date: January 15, 2005
Reference: 200401381
Name: Wade, Paul

Interested parties are hereby notified that an application has been received for a Department of the Army permit in accordance with Section 10 of the Rivers and Harbors Act of March 3, 1899, and Section 404 of the Clean Water Act for certain work described below and shown on the enclosed drawings.

APPLICANT Paul Wade
2608 – 2nd Avenue, # 250
Seattle, Washington 98121

AGENT – Todd Jackson
2458 Highland Place
East Wenatchee, Washington 98802
Telephone: (509)-679-9297

LOCATION – Lake Chelan, near Manson, Chelan County, Washington.

WORK – Place rock bank stabilization (142 linear feet) (11 cubic yards (cy) of which will be below ordinary high water), construct a pier (320 square feet), drive ten 10" steel piling, install a boat lift with a canopy, install a swim float (80 square feet), install a mooring buoy, and install two submerged complex woody structures.

PURPOSE – To disperse wave action and reduce shoreline erosion, and to provide recreational lake access and moorage.

MITIGATION – The applicant proposes to install two submerged complex woody structures. The exact location will be determined by the Washington Department of Fish and Wildlife.

ENDANGERED SPECIES – A preliminary determination indicates that the activity may affect, but is not likely to adversely affect the bald eagle and the bull trout. Informal consultation under Section 7 of the Endangered Species Act will be initiated with U.S. Fish and Wildlife Service.

ESSENTIAL FISH HABITAT – The Magnuson-Stevens Fishery Conservation and Management Act (MSA), as amended by the Sustainable Fisheries Act of 1996, requires all Federal agencies to consult with the National Marine Fisheries Service (NMFS) on all actions, or proposed actions, permitted, funded, or undertaken by the agency, that may adversely affect Essential Fish Habitat (EFH). There will be no effect on EFH because EFH does not occur in the area of the proposed project

CULTURAL RESOURCES - The District Engineer has reviewed the latest published version of the National Register of Historic Places, lists of properties determined eligible and other sources of information. The following is current knowledge of the presence or absence of historic properties and the effects of the undertaking upon these properties: There are no recorded historic properties within the permit area. The permit area has been so extensively modified by modern development that little likelihood exists for the proposed project to impinge upon an undisturbed historic property.

PUBLIC HEARING - Any person may request, in writing, within the comment period specified in this notice, that a public hearing be held to consider this application. Requests for public hearings shall state, with particularity, the reasons for holding a public hearing.

EVALUATION - The decision whether to issue a permit will be based on an evaluation of the probable impact, including cumulative impacts of the proposed activity on the public interest. That decision will reflect the national concern for both protection and utilization of important resources. The benefits which reasonably may be expected to accrue from the proposal must be balanced against its reasonably foreseeable detriments. All factors which may be relevant to the proposal will be considered, including the cumulative effects thereof; among those are conservation, economics, aesthetics, general environmental concerns, wetlands, historic properties, fish and wildlife values, flood hazards, floodplain values, land use, navigation, shoreline erosion and accretion, recreation, water supply and conservation, water quality, energy needs, safety, food and fiber production, mineral needs, considerations of property ownership, and, in general, the needs and welfare of the people.

The U.S. Army Corps of Engineers (Corps) is soliciting comments from the public; Federal, Native American Nations or tribal governments, State, and local agencies and officials; and other interested parties in order to consider and evaluate the impacts of this activity. Any comments received will be considered by the Corps to determine whether to issue, modify, condition or deny a permit for the work. To make this decision, comments are used to assess impacts on endangered species, historic properties, water quality, general environmental effects, and the other public interest factors listed above. Comments are used in the preparation of an Environmental Assessment and/or an Environmental Impact Statement pursuant to the National Environmental Policy Act. Comments are also used to determine the need for a public hearing and to determine the overall public interest of the activity.

ADDITIONAL EVALUATION - The State of Washington is reviewing this for compliance with the applicable State and Federal water quality standards pursuant to Section 401 of the Clean Water Act.

COMMENT AND REVIEW PERIOD – Conventional mail or email comments on this public notice will be accepted and made part of the record and will be considered in determining whether it would be in the public interest to authorize this proposal. In order to be accepted, email comments must originate from the author's email account and must include on the subject line of the email message the permit applicant's name and reference number as shown below. All email comments should be sent to Deborah.J.Knaub@usace.army.mil. Conventional mail comments should be sent to U.S. Army Corps of Engineers, Regulatory Branch, Post Office Box 3755, Seattle, Washington 98124-3755. Both conventional mail or email comments must include the permit applicant's name and reference number, as shown below, and the commentor's name, address, and phone number. All comments whether conventional mail or email must reach this office, no later than the expiration date of this public notice to ensure consideration. Please include the following name and reference number:

Wade, Paul; 200401381

Encl
Drawings (7)

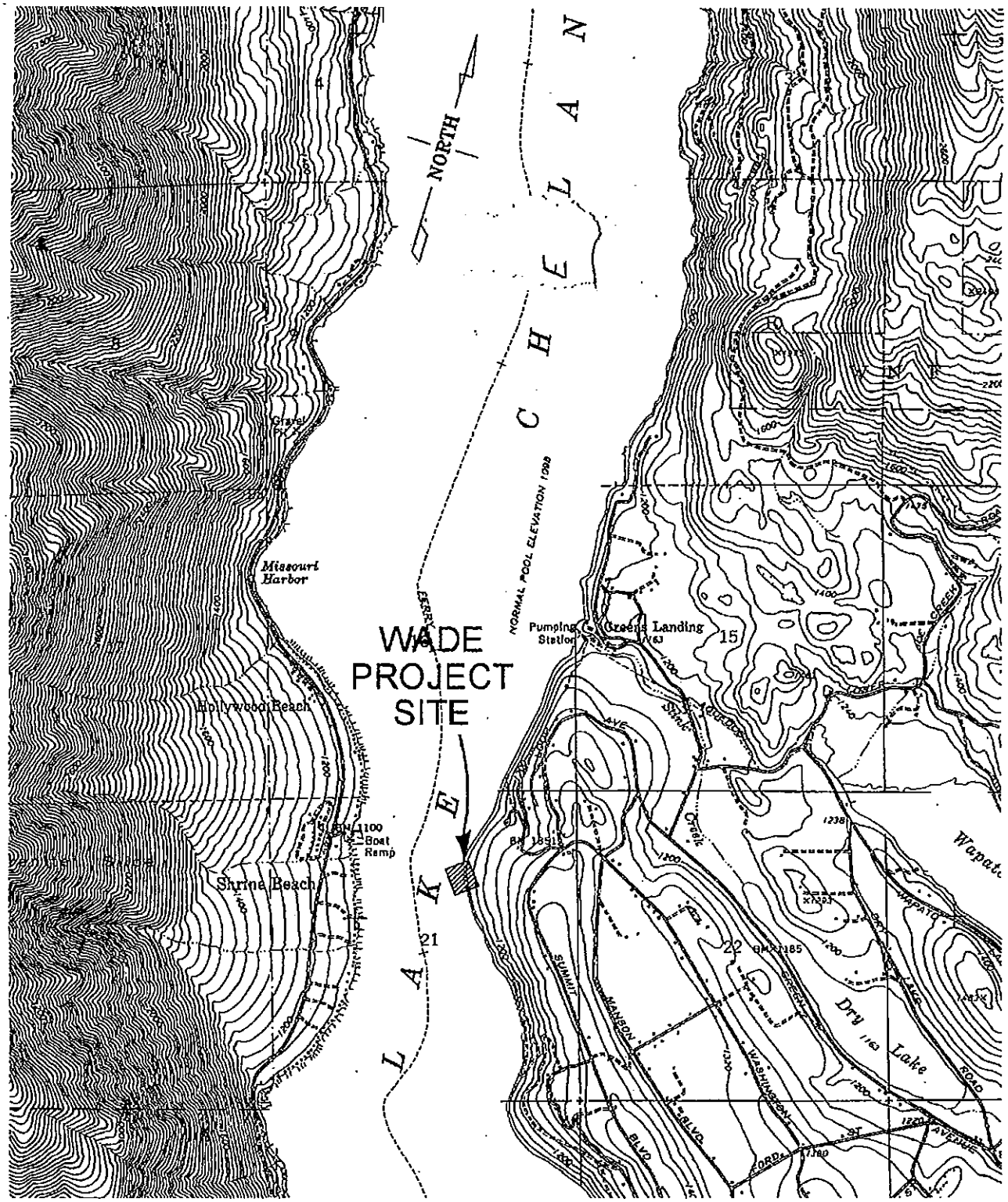

VICINITY MAP

REFERENCE # 200401381	APPLICANT: PAUL WADE		PROJECT: PIER, BUOY, LIFT, SWIMFLOAT & BULKHEAD	
PROPERTY ADDRESS: TRACT 548 OF HIGHLINE #5 MANSON, WA		WATERBODY: LAKE CHELAN	DATUM: NGVD	
PROXIMITY TO: MANSON 4 MILES	TOWNSHIP: 28	RANGE: 21	SECTION: 21	
ADJACENT PROPERTY OWNERS: CULLEN, NOGLE	PURPOSE: MOORAGE & RECREATION			SCALE: NTS
COUNTY: CHELAN			DATE: 09/28/04	SHEET: 1 OF 7

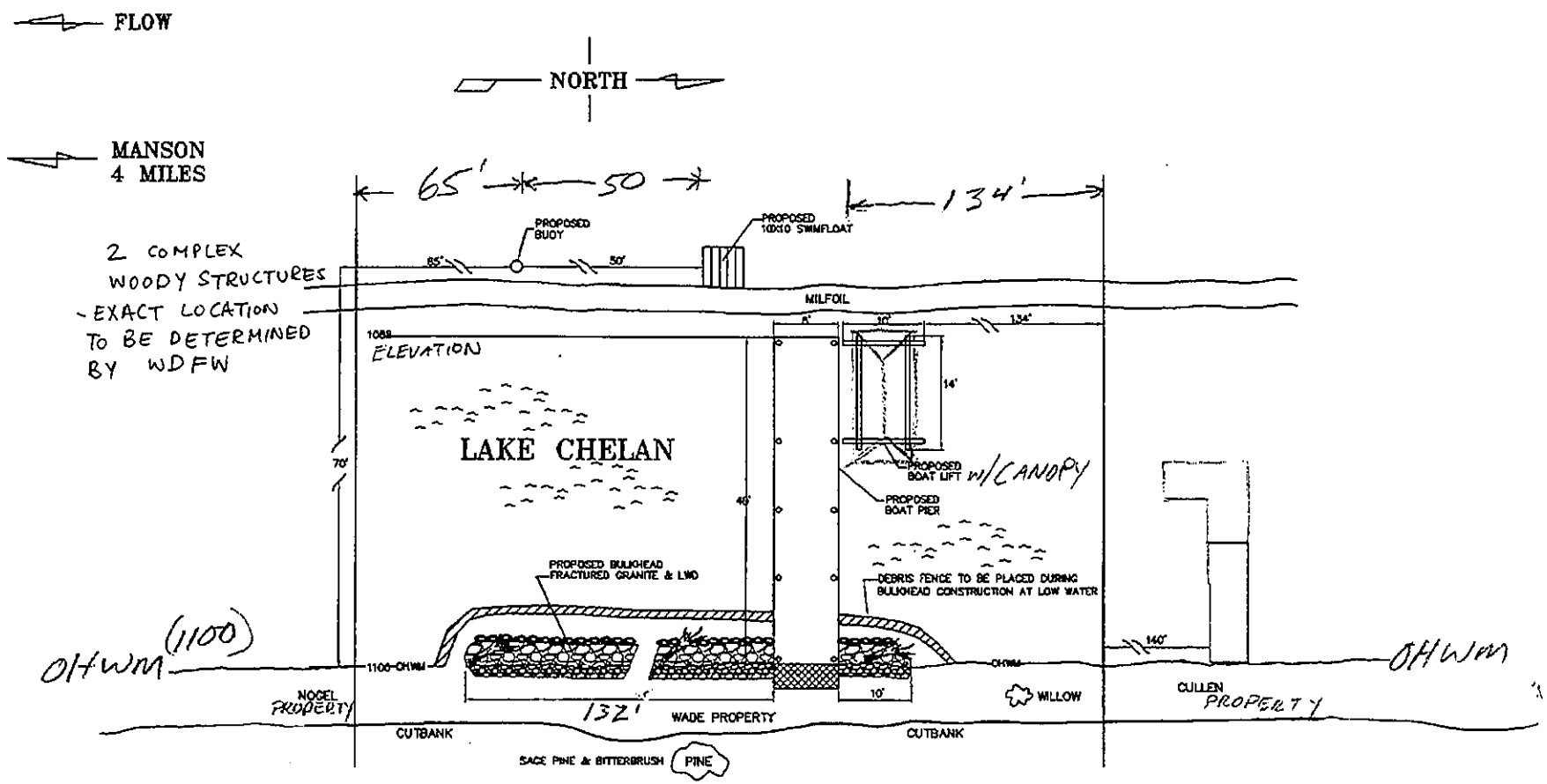

WADE PLAN VIEW

REFERENCE # 200401381	APPLICANT: PAUL WADE				PROJECT: PIER, BUOY, LIFT, SWIMFLOAT & BULKHEAD	
PROPERTY ADDRESS: TRACT 548 OF HIGHLINE #5 MANSON, WA			WATERBODY: LAKE CHELAN			DATUM: NGVD
PROXIMITY TO: MANSON 4 MILES	TOWNSHIP: 28	RANGE: 21	SECTION: 21	COUNTY: CHELAN	SHEET: 2 OF 7	DATE: 09/28/04
ADJACENT PROPERTY OWNERS: CULLEN, NOGLE				SCALE: 1"=20'	PURPOSE: MOORAGE & RECREATION	

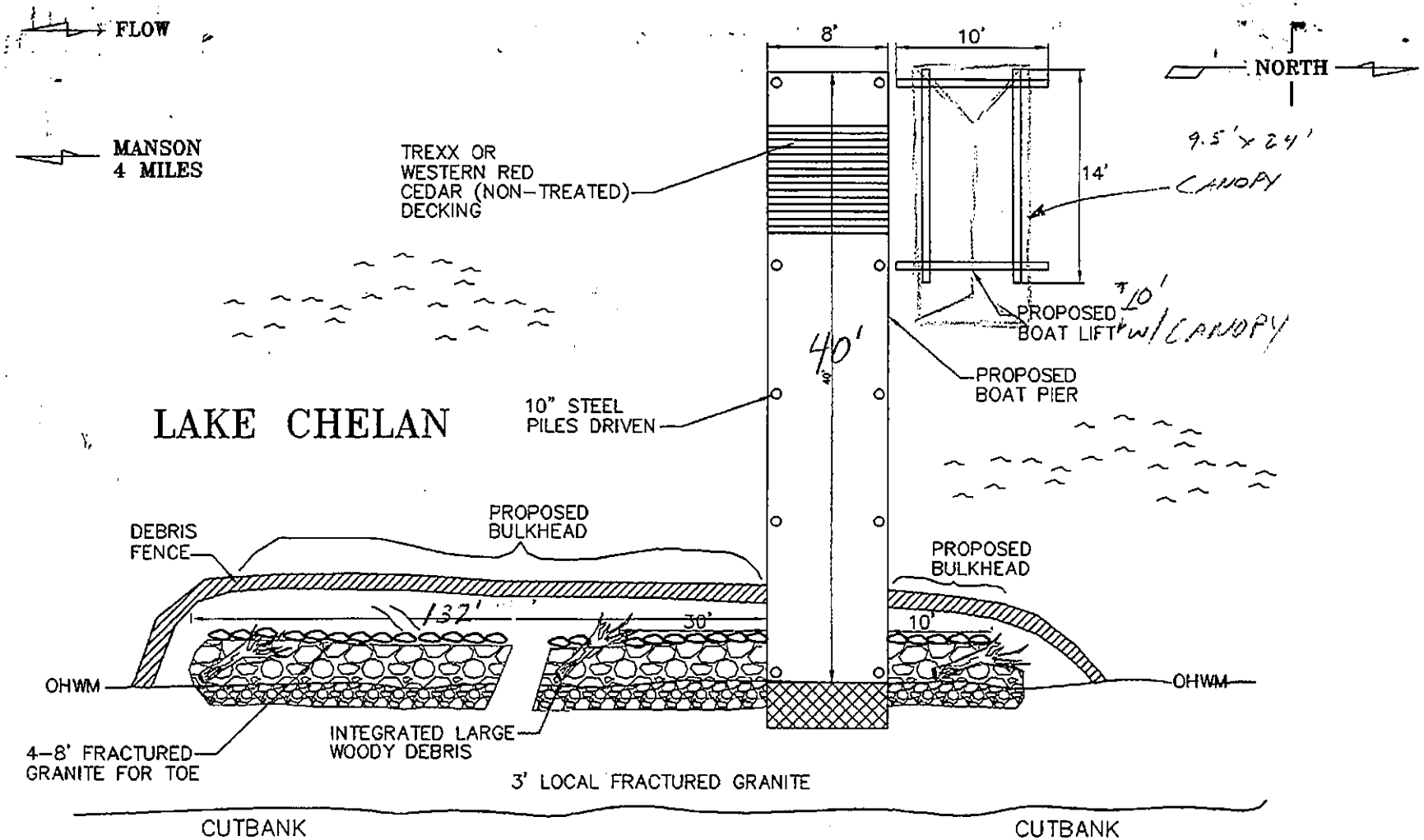

WADE SITE PLAN

REFERENCE # 20240138 1	APPLICANT: PAUL WADE				PROJECT: PIER, BUOY, LIFT, SWIMFLOAT & BULKHEAD, Canopy	
PROPERTY ADDRESS: TRACT 548 OF HIGHLINE #5 MANSON, WA		WATERBODY: LAKE CHELAN				DATUM: NGVD
PROXIMITY TO: MANSON 4 MILES	TOWNSHIP: 28	RANGE: 21	SECTION: 21	COUNTY: CHELAN	SHEET: 3 OF 7	DATE: 09/28/04
ADJACENT PROPERTY OWNERS: CULLEN NOGLE				SCALE: 1"=10'	PURPOSE: MOORAGE & RECREATION	

Bulkhead Plan

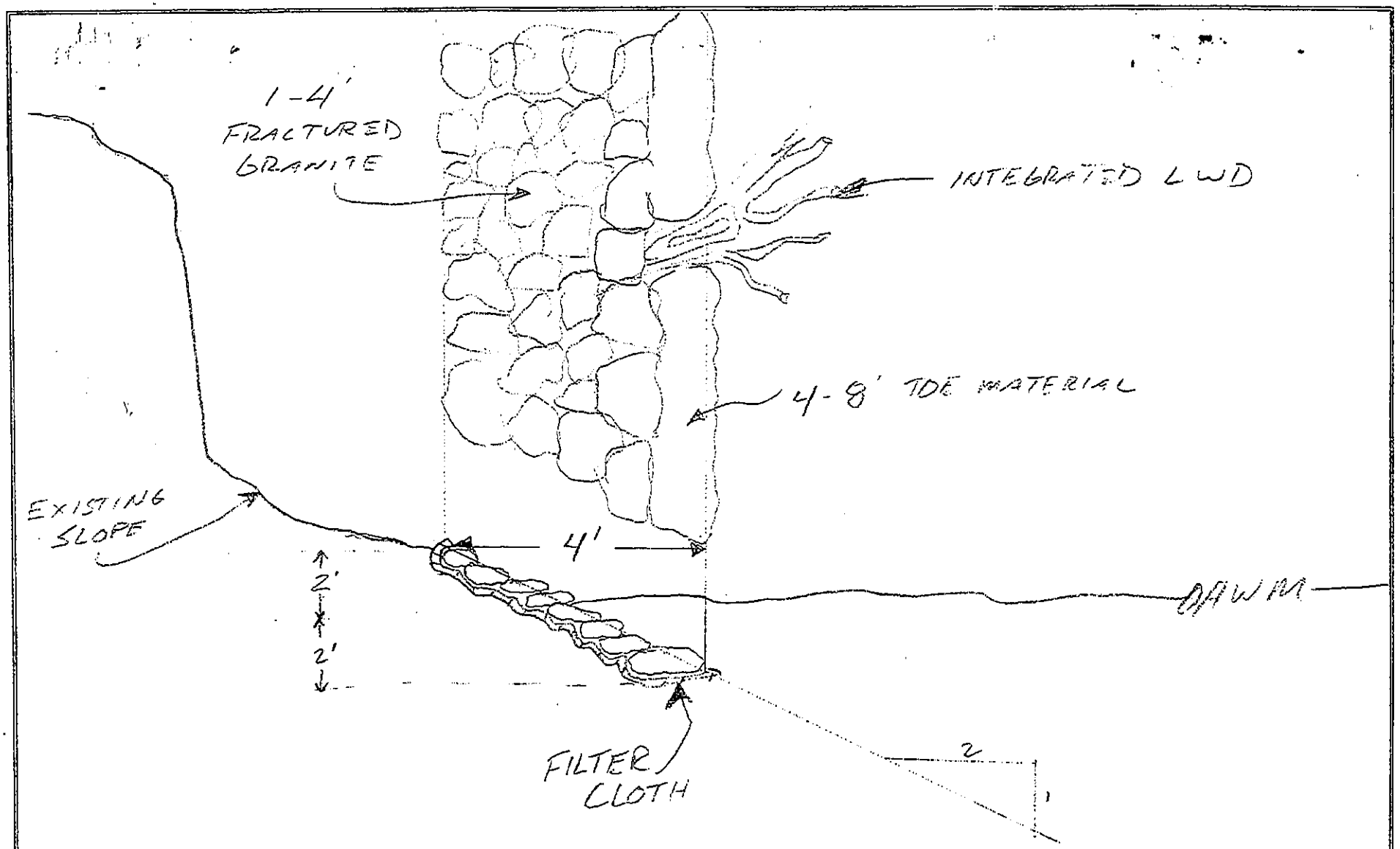

Reference #	200401381	Applicant	Paul Wade							Project	Bulkhead
Property Address		4790 Chelan Blvd., Manson				Waterbody		Lake Chelan		Scale	1" = 2'
										Sheet	4 of 7 9/28/04

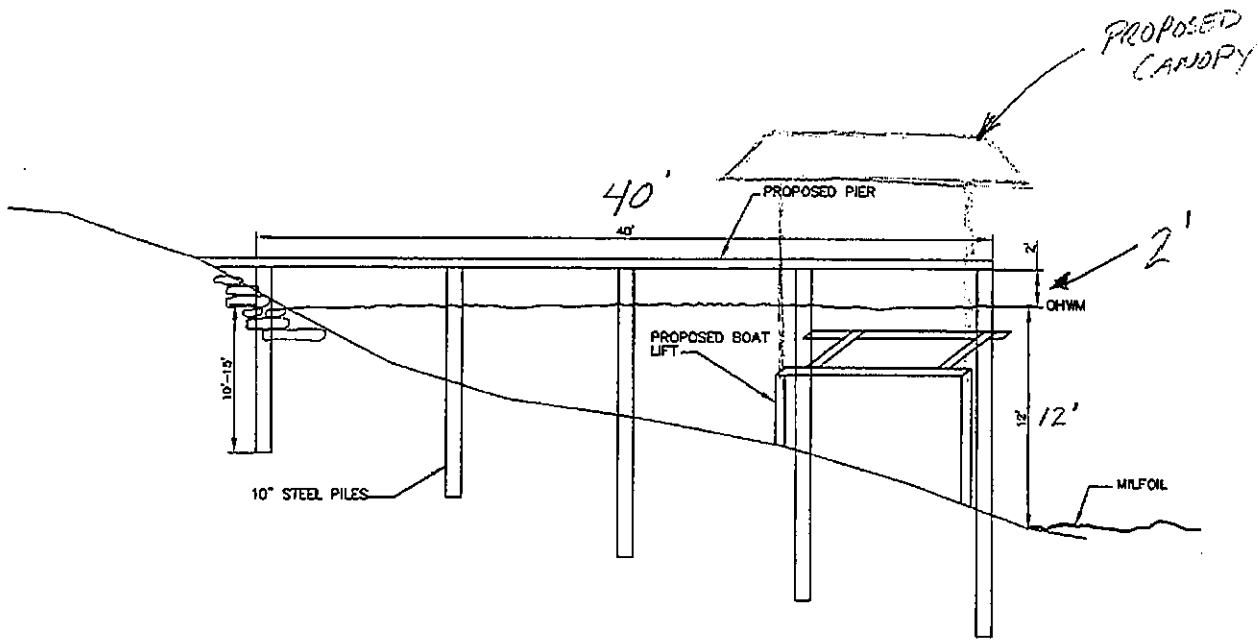

PIER ELEVATION VIEW

REFERENCE # 200401381	APPLICANT: PAUL WADE				PROJECT: PIER, BUOY, LIFT, SWIMFLOAT & BULKHEAD	
PROPERTY ADDRESS: TRACT 548 OF HIGHLINE #5 MANSON, WA		WATERBODY: LAKE CHELAN				DATUM: NGVD
PROXIMITY TO: MANSON 4 MILES	TOWNSHIP: 28	RANGE: 21	SECTION: 21	COUNTY: CHELAN	SHEET: 5 OF 7	DATE: 09/28/04
ADJACENT PROPERTY OWNERS: CULLEN, NOGLE				SCALE: 1"=10'	PURPOSE: MOORAGE & RECREATION	

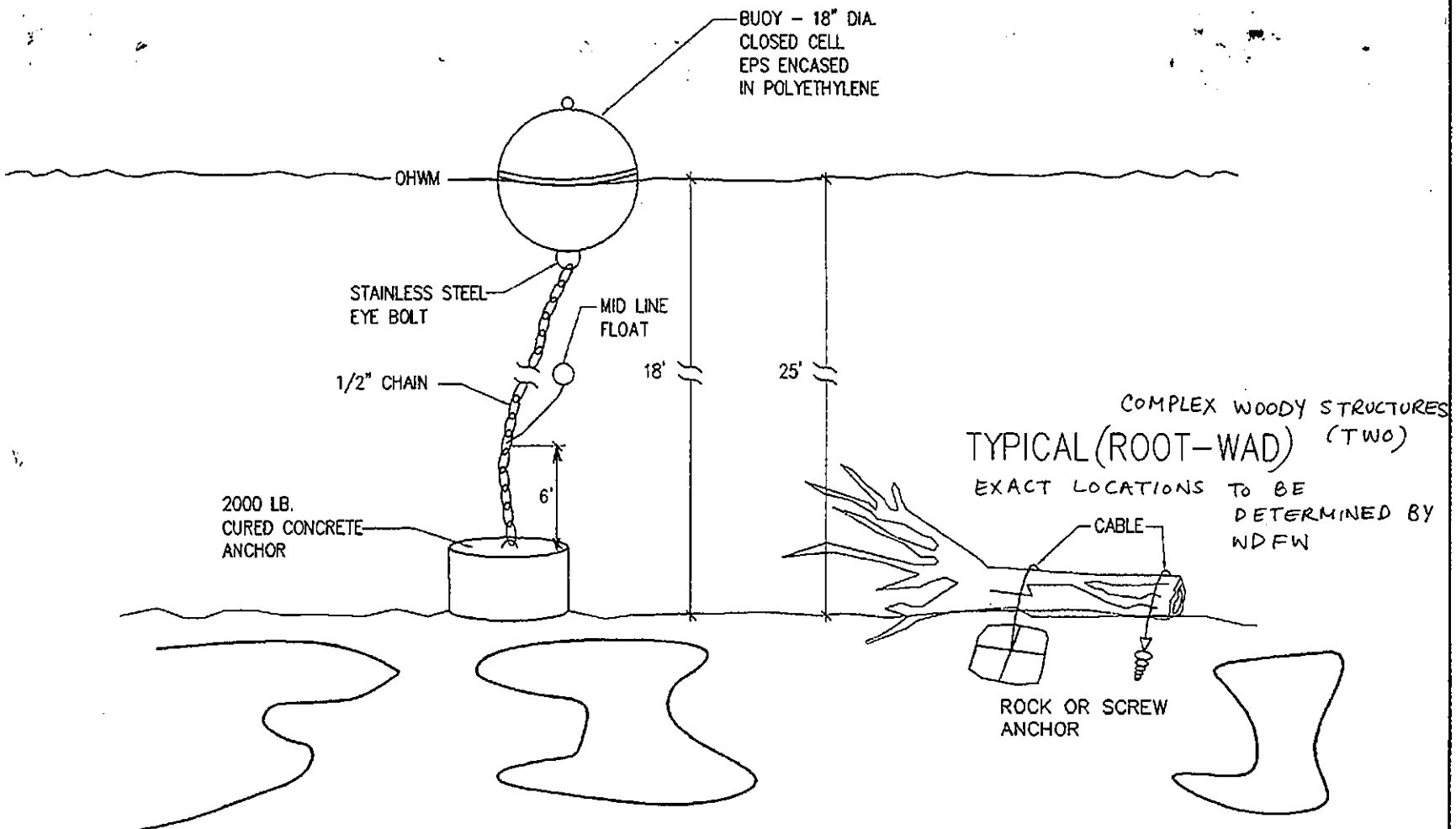

BUOY ELEVATION VIEW

REFERENCE # 20040138/	APPLICANT: PAUL WADE				PROJECT: PIER, BUOY, LIFT, SWIMFLOAT & BULKHEAD	
PROPERTY ADDRESS: TRACT 548 OF HIGHLINE #5 MANSON, WA			WATERBODY: LAKE CHELAN			DATUM: NGVD
PROXIMITY TO: MANSON 4 MILES	TOWNSHIP: 28	RANGE: 21	SECTION: 21	COUNTY: CHELAN	SHEET: 6 OF 7	DATE: 09/28/04
ADJACENT PROPERTY OWNERS: CULLEN NOGLE				SCALE: NTS	PURPOSE: MOORAGE & RECREATION	

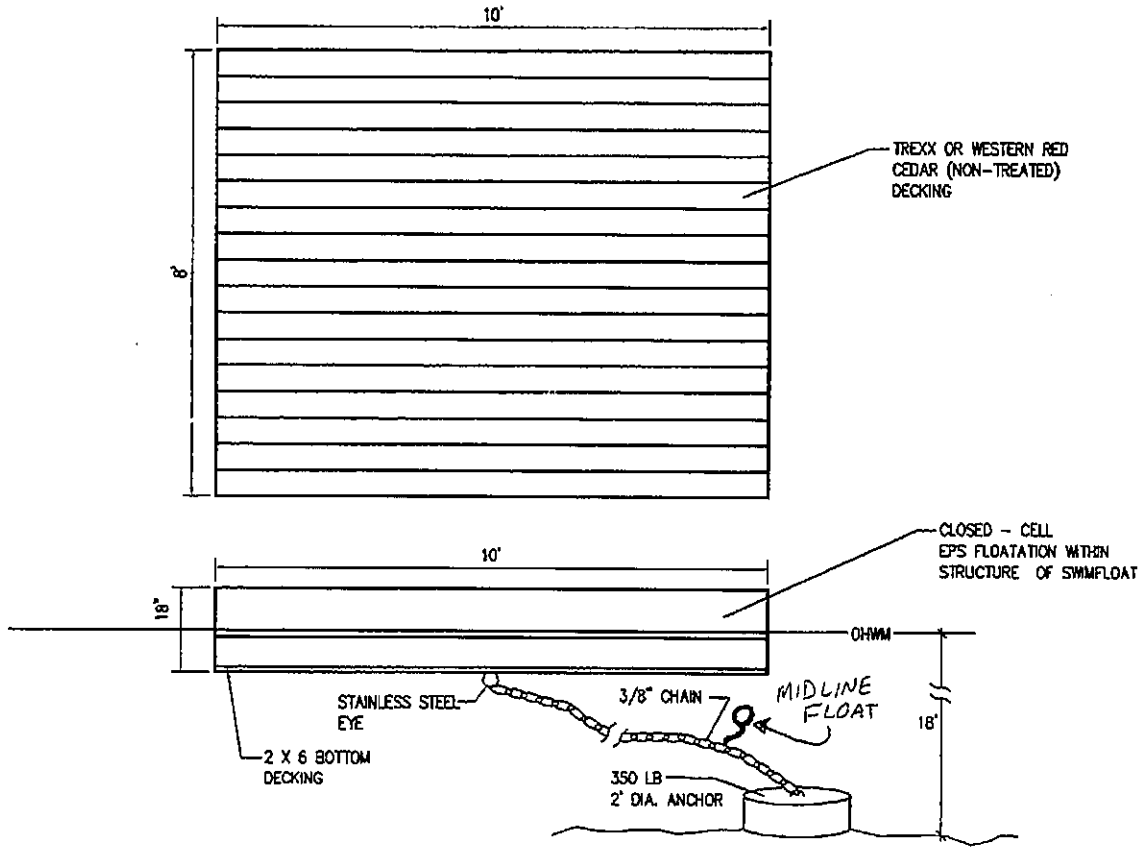

WADE ELEVATION & PLAN VIEW

REFERENCE # 2004 0138 1	APPLICANT: PAUL WADE					PROJECT: BOAT LIFT W/ CANOPY, BUOY, PIER, FLOAT, BLKHD.	
PROPERTY ADDRESS: 2252 SR 150, MANSON		WATERBODY: LAKE CHELAN					DATUM: NGVD
PROXIMITY TO: CHELAN 6 MILES	TOWNSHIP: 28	RANGE: 22	SECTION: 31	COUNTY: CHELAN		SHEET: 7 OF 7	DATE: 04/15/04
ADJACENT PROPERTY OWNERS: VANDERHOEK AND FAHEY					SCALE: NTS		PURPOSE: MOORAGE

STATE OF WASHINGTON
DEPARTMENT OF ECOLOGY
P.O. Box 47600 • Olympia, Washington 98504-7600
(360) 407-6000 • TDD Only (Hearing Impaired) (360) 407-6006

STATE OF WASHINGTON
DEPARTMENT OF ECOLOGY

Notice of Application for
Water Quality Certification

Date: December 16, 2004

Notice is herby given that a request has been filed with the Department of Ecology, pursuant to the requirements of Section 401 of the federal Clean Water Act of 1977 (PL 95-217), to certify that the project described in the U.S. Army Corps of Engineers Public Notice No. 200401381 will comply with the Sections 301, 302, 303, 306, and 307 of the Act, and with applicable provisions of State and Federal water pollution control laws.

Any person desiring to present views on the project pertaining to compliance with water pollution control laws may do so by providing written comments within 30 days of the above publication date to:

Federal Permit Coordinator
Department of Ecology
SEA Program
Post Office Box 47600
Olympia, Washington 98504-7600