FIGURES

© 2008 GeoDesign, Inc. All rights reserved

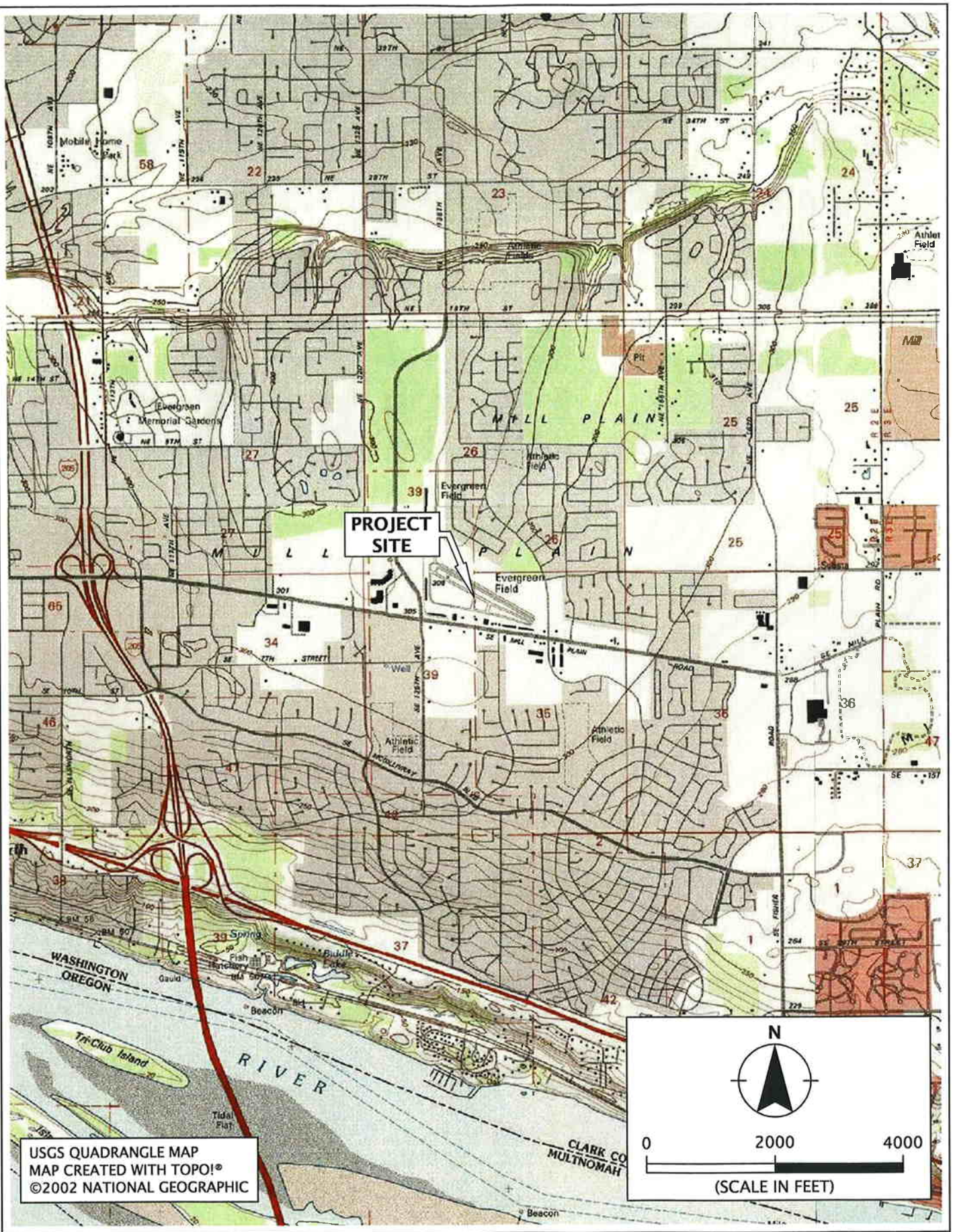

GEODESIGN INC
1201 SE Tech Center Drive - Suite 160
Vancouver WA 98683
Off 360.693.8416 Fax 360.693.8426

BONESCONST-7-01	**VICINITY MAP**	
JUNE 2008	THE VILLAGE AT EVERGREEN VANCOUVER, WA	**FIGURE 1**

Printed By: rfreeman | Print Date: 6/13/2008 1:35:10 PM
File Name: J:\A-D\BonesConst\BonesConst-7\BonesConst-7-01\Figures\CAD\Final_Report_Figures\BonesConst-7-01-F1-VM.dwg | Layout: FIGURE 1

© 2008 GeoDesign, Inc. All rights reserved

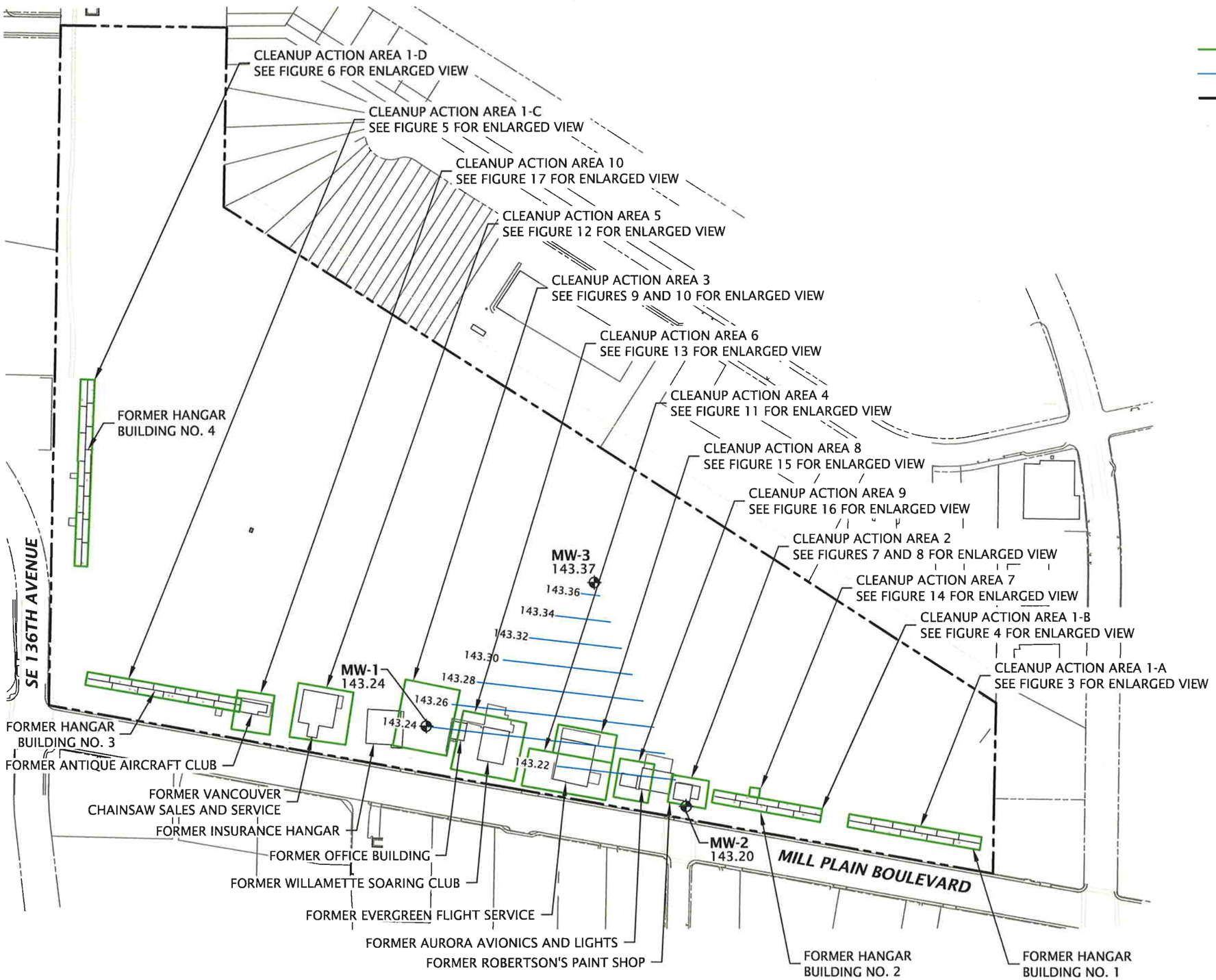

LEGEND:

MW-1 ◆	MONTORING WELL
143.24	GROUNDWATER ELEVATION
	CLEANUP ACTION AREA
	POTENTIOMETRIC SURFACE
	PROJECT SITE BOUNDARY

SITE PLAN BASED ON DRAWING PROVIDED BY
K C DEVELOPMENT
MAY 17, 2005

FIGURE 2

SITE PLAN

THE VILLAGE AT EVERGREEN
VANCOUVER, WA

BONESCONST-7-01

JUNE 2008

GEODESIGN INC
1201 SE Tech Center Drive - Suite 160
Vancouver WA 98683
Off 360.693.8416 Fax 360.693.8426

Printed By: rfreeman | Print Date: 6/13/2008 1:35:33 PM
File Name: J:\A-D\BonesConst\BonesConst-7\BonesConst-7-01\Figures\CAD\Final_Report_Figures\BonesConst-7-01-F2-17-SP.dwg | Layout: Figure 2

© 2008 GeoDesign, Inc. All rights reserved

Printed By: rfreeman | Print Date: 6/13/2008 1:35:51 PM
File Name: J:\A-D\BonesConst\BonesConst-7\BonesConst-7-01\Figures\CAD\Final_Report_Figures\BonesConst-7-01-F2-17-SP.dwg | Layout: Figure 3

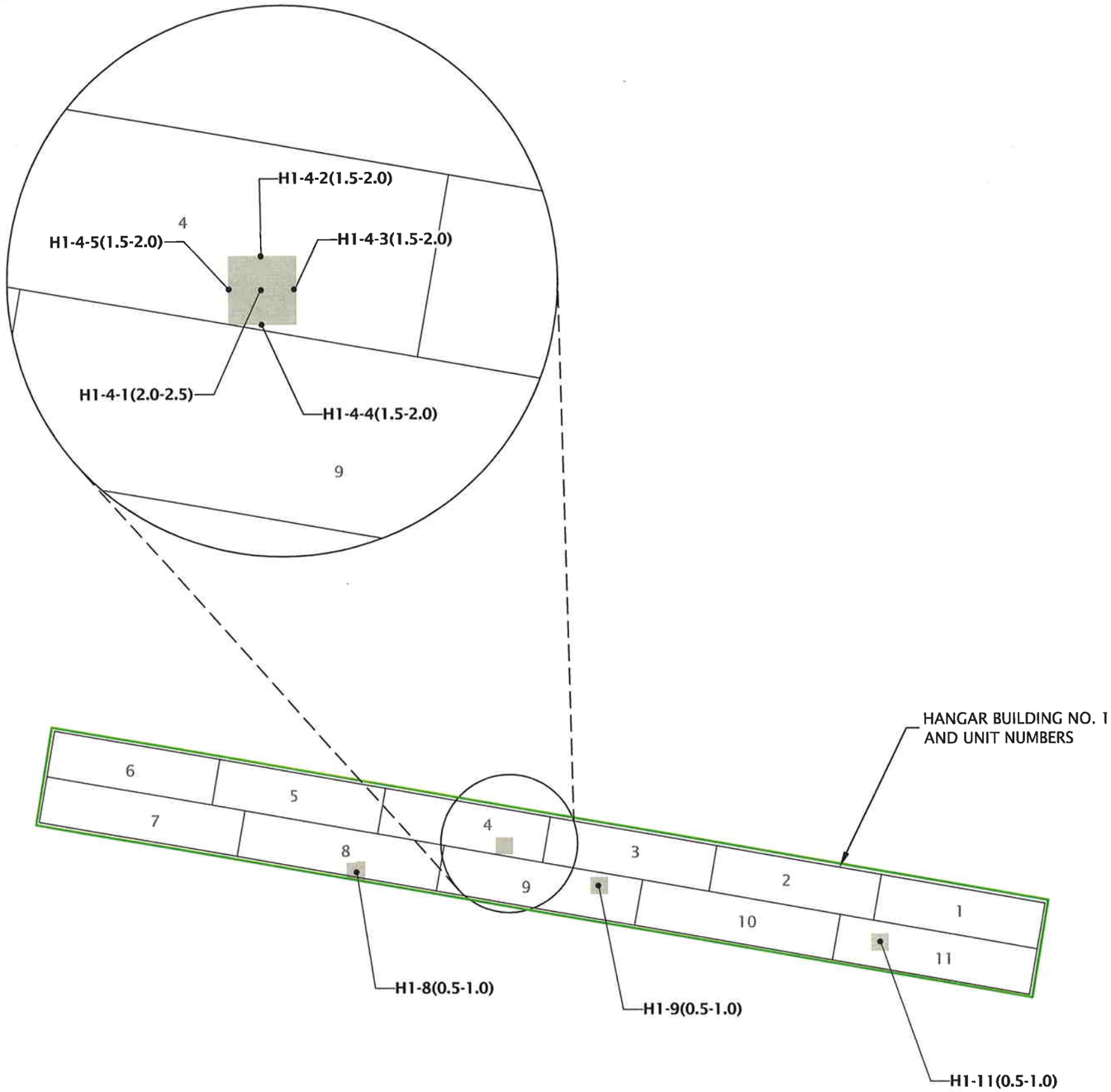

LEGEND:

H1-8(0.5-1.0) •	SOIL SAMPLE
	REMOVED SURFACE STAINING
	CLEANUP ACTION AREA

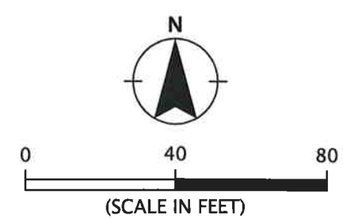

SITE PLAN BASED ON DRAWING PROVIDED BY
K C DEVELOPMENT
MAY 17, 2005

ENLARGED VIEW - CLEANUP ACTION AREA 1A

THE VILLAGE AT EVERGREEN
VANCOUVER, WA

FIGURE 3

BONESCONST-7-01

JUNE 2008

GEODESIGN INC
1201 SE Tech Center Drive - Suite 160
Vancouver WA 98683
Off 360.693.8416 Fax 360.693.8426

© 2008 GeoDesign, Inc. All rights reserved

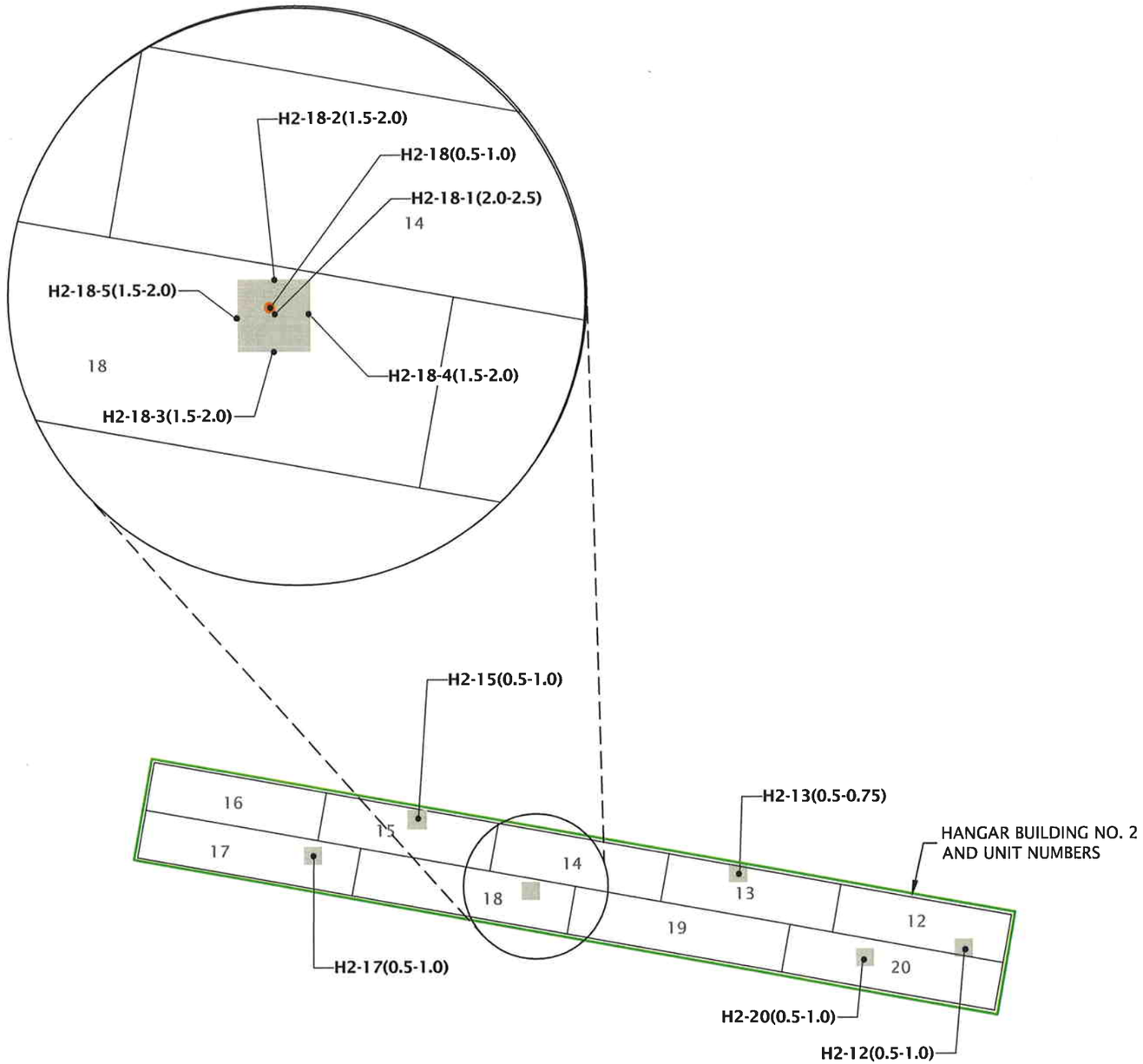

LEGEND:

H2-13(0.5-0.75) •	SOIL SAMPLE
H2-18(0.5-1.0) ●	OVEREXCAVATED SOIL SAMPLE
	REMOVED SURFACE STAINING
	CLEANUP ACTION AREA

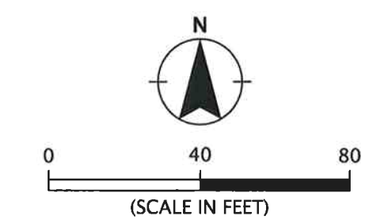

SITE PLAN BASED ON DRAWING PROVIDED BY
K C DEVELOPMENT
MAY 17, 2005

ENLARGED VIEW - CLEANUP ACTION AREA 1B

THE VILLAGE AT EVERGREEN
VANCOUVER, WA

FIGURE 4

BONESCONST-7-01

JUNE 2008

GEODESIGN INC
1201 SE Tech Center Drive - Suite 160
Vancouver WA 98683
Off 360.693.8416 Fax 360.693.8426

Printed By: rfreeman | Print Date: 6/13/2008 1:36:07 PM
File Name: J:\A-D\BonesConst\BonesConst-7\BonesConst-7-01\Figures\CAD\Final_Report_Figures\BonesConst-7-01-F2-17-SP.dwg | Layout: Figure 4

© 2008 GeoDesign, Inc. All rights reserved

Printed By: rfreeman | Print Date: 6/13/2008 1:36:20 PM
File Name: J:\A-D\BonesConst\BonesConst-7\BonesConst-7-01\Figures\CAD\Final_Report_Figures\BonesConst-7-01-F2-17-SP.dwg | Layout: Figure 5

LEGEND:

H3-23(0.5 - 1.0) • SOIL SAMPLE

REMOVED SURFACE STAINING

CLEANUP ACTION AREA

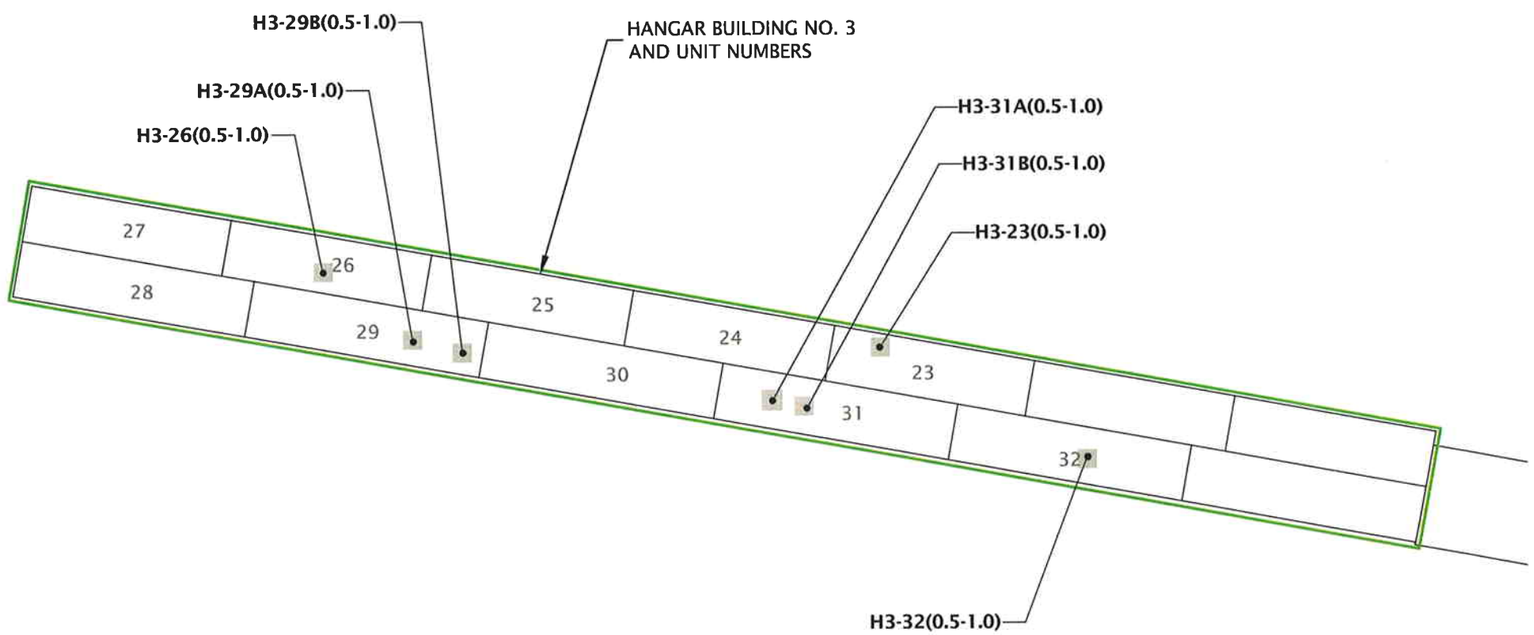

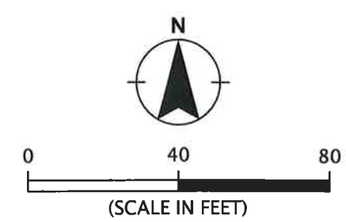

SITE PLAN BASED ON DRAWING PROVIDED BY
K C DEVELOPMENT
MAY 17, 2005

ENLARGED VIEW - CLEANUP ACTION AREA 1C

THE VILLAGE AT EVERGREEN
VANCOUVER, WA

FIGURE 5

BONESCONST-7-01

JUNE 2008

GEODESIGN INC
1201 SE Tech Center Drive - Suite 160
Vancouver WA 98683
Off 360.693.8416 Fax 360.693.8426

© 2008 GeoDesign, Inc. All rights reserved

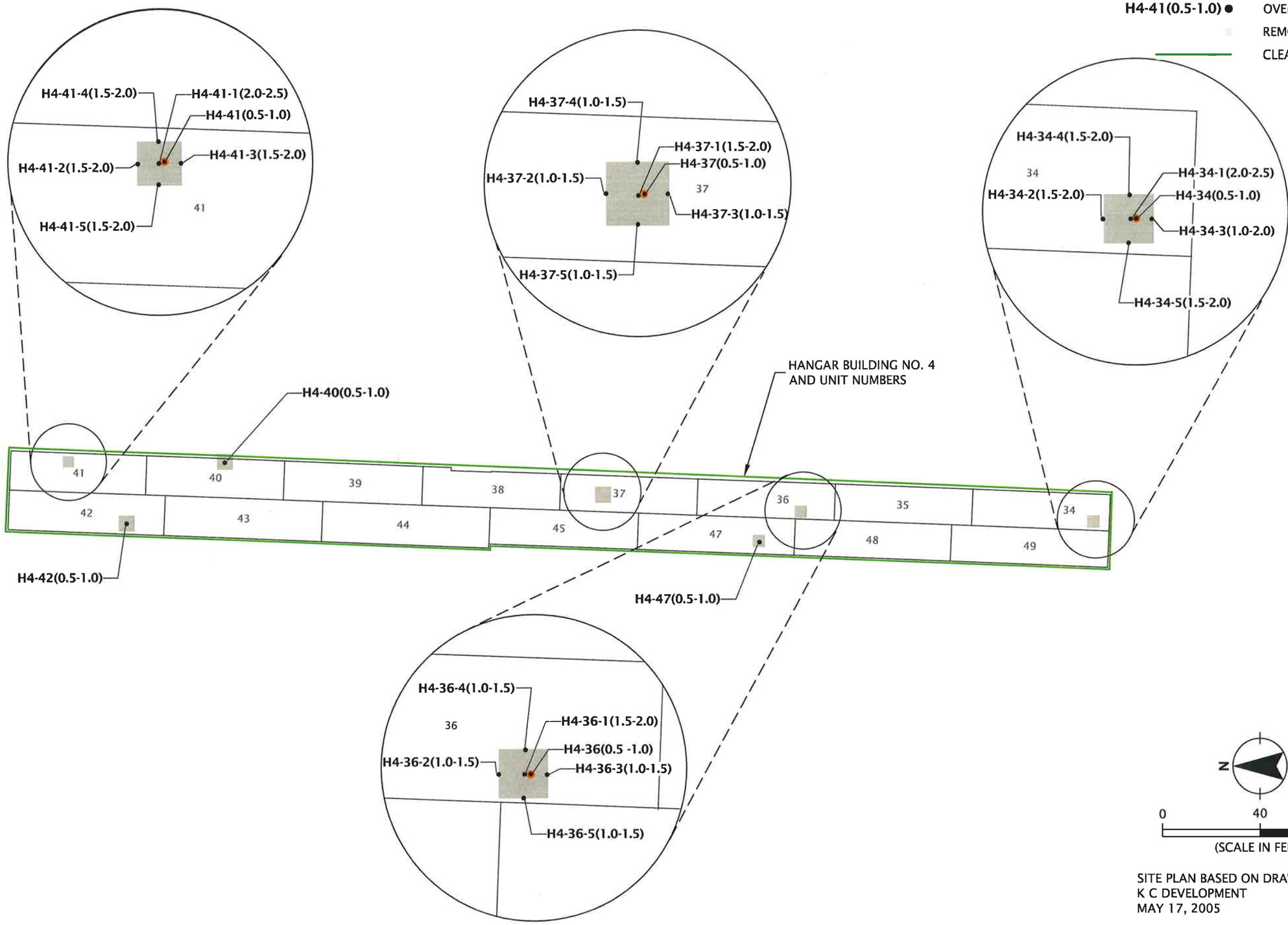

SITE PLAN BASED ON DRAWING PROVIDED BY
K C DEVELOPMENT
MAY 17, 2005

ENLARGED VIEW - CLEANUP ACTION AREA 1D

FIGURE 6

THE VILLAGE AT EVERGREEN
VANCOUVER, WA

BONESCONST-7-01

JUNE 2008

GEODESIGN INC
1201 SE Tech Center Drive - Suite 160
Vancouver WA 98683
Off 360.693.8416 Fax 360.693.8426

Printed By: rfreeman | Print Date: 6/13/2008 1:36:46 PM
File Name: J:\VA-D\BonesConst\BonesConst-7\BonesConst-7-01\Figures\CAD\Final_Report_Figures\BonesConst-7-01-F2-17-SP.dwg | Layout: Figure 6

© 2008 GeoDesign, Inc. All rights reserved

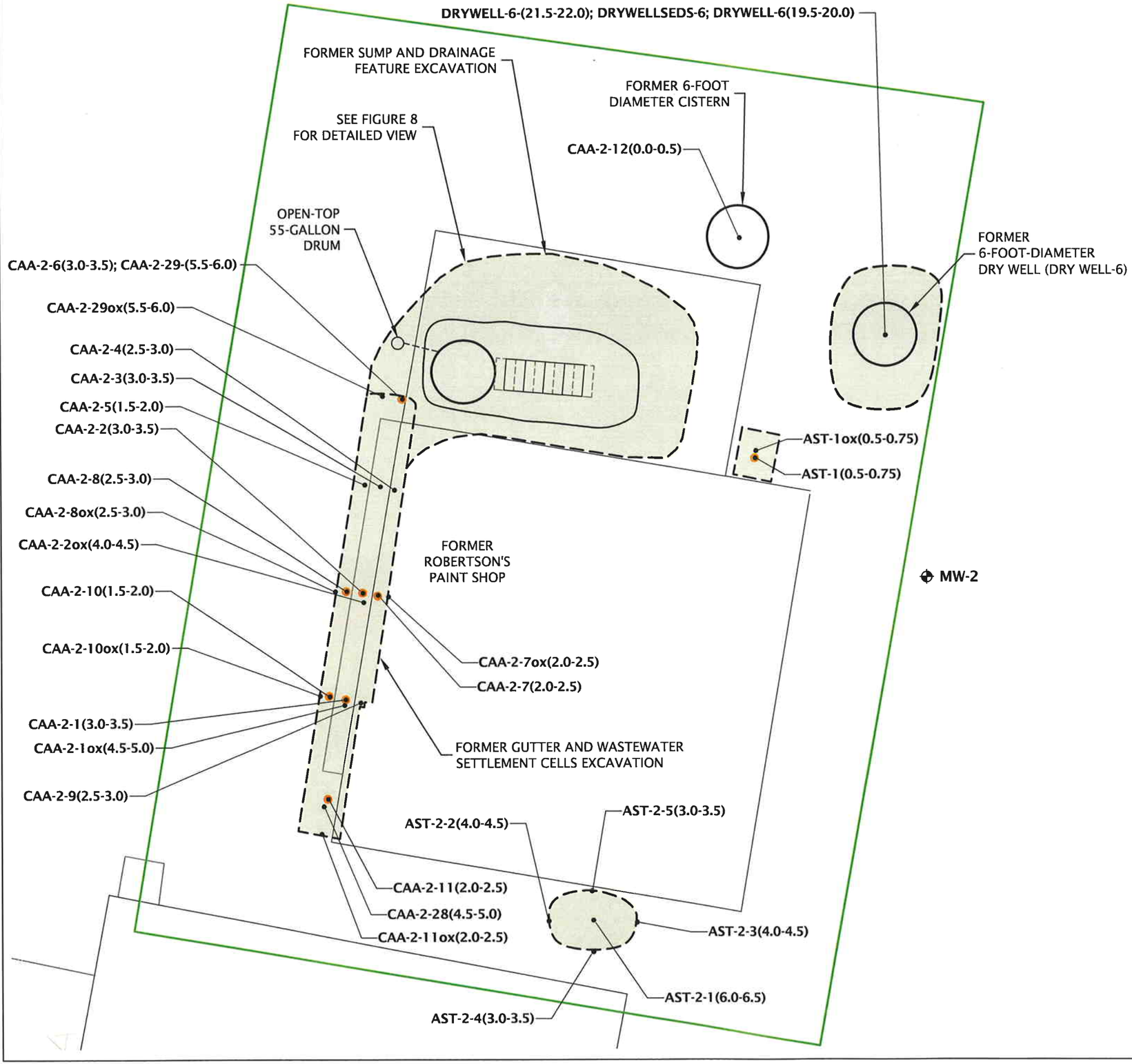

LEGEND:

CAA-2-1(3-3.5)•	SOIL SAMPLE
CAA-2-7ox(2.0-2.5)●	OVEREXCAVATED SOIL SAMPLE
MW-2 ⊕	MONITORING WELL
	EXCAVATION AREA
	CLEANUP ACTION AREA

N

0 10 20

(SCALE IN FEET)

SITE PLAN BASED ON DRAWING PROVIDED BY
K C DEVELOPMENT
MAY 17, 2005

ENLARGED VIEW - CLEANUP ACTION AREA 2

THE VILLAGE AT EVERGREEN
VANCOUVER, WA

FIGURE 7

BONESCONST-7-01

JUNE 2008

GEODESIGN INC
1201 SE Tech Center Drive - Suite 160
Vancouver WA 98683
Off 360.693.8416 Fax 360.693.8426

Printed By: rfreeman | Print Date: 6/13/2008 2:34:58 PM
File Name: J:\A-D\BonesConst\BonesConst-7\BonesConst-7-01\Figures\CAD\Final_Report_Figures\BonesConst-7-01-F2-17-SP.dwg | Layout: Figure 7

© 2008 GeoDesign, Inc. All rights reserved

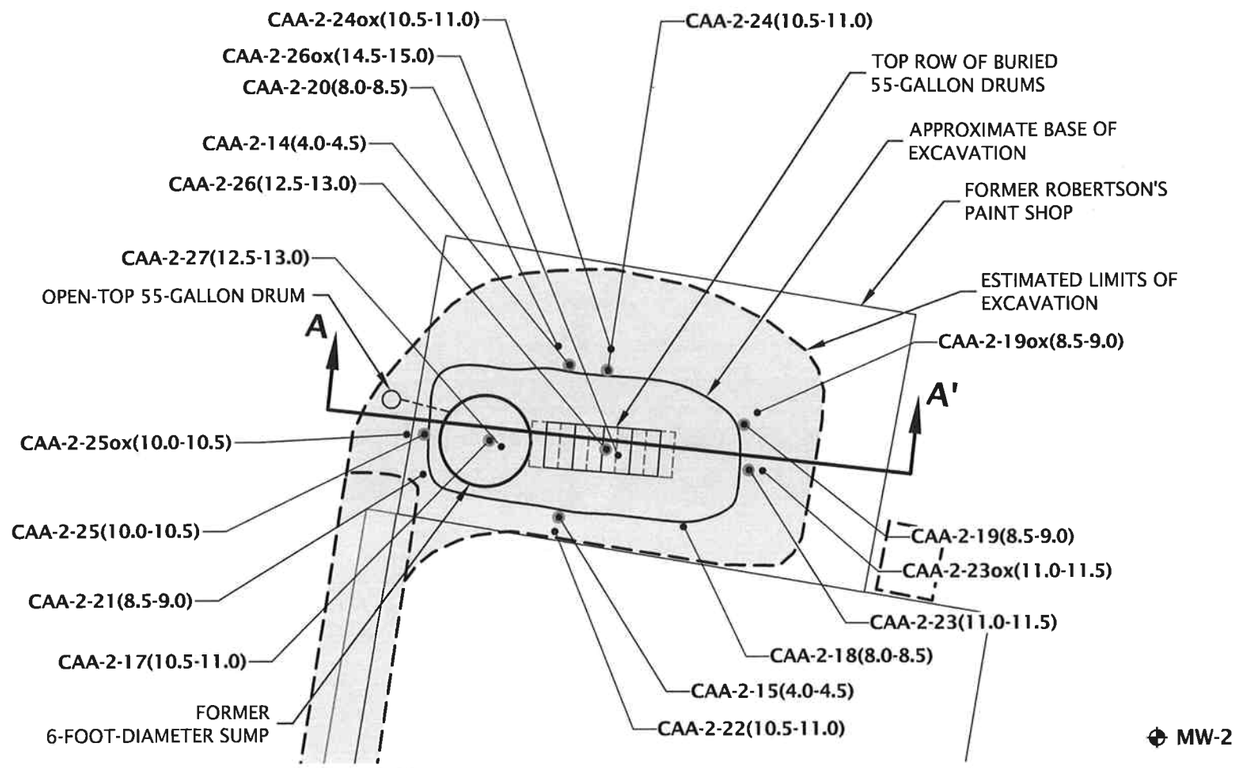

1 CLEANUP ACTION AREA 2 PLAN

SCALE AS SHOWN

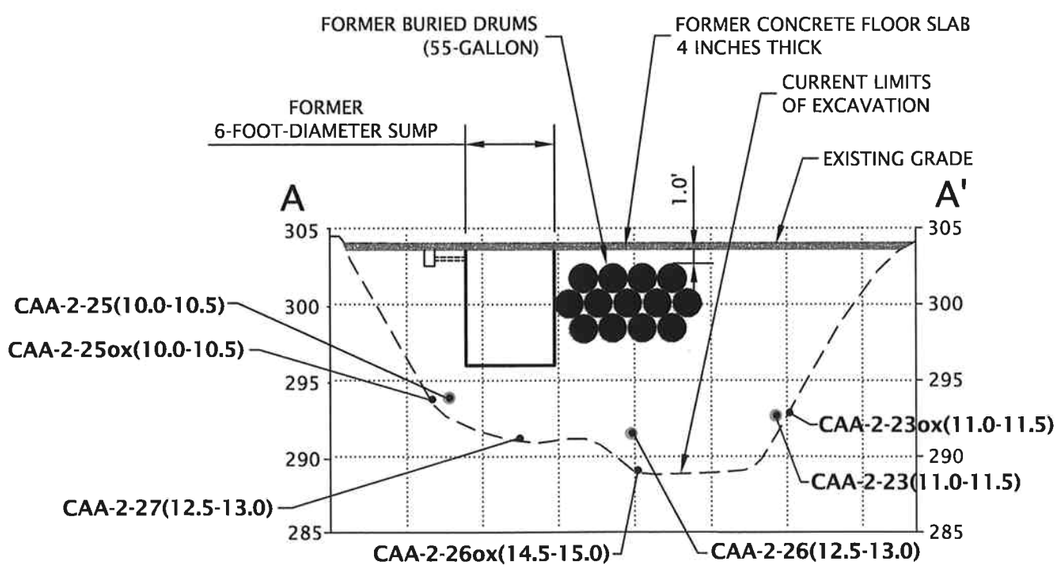

2 CROSS SECTION A-A'

SCALE AS SHOWN
ELEVATION IS APPROXIMATE

LEGEND:

CAA-2-13(8.0-8.5) •	SOIL SAMPLE
CAA-2-14ox(0.5-1.0) ●	OVEREXCAVATED SOIL SAMPLE
MW-2 ⊕	MONITORING WELL
	EXCAVATION AREA
A A'	CROSS SECTION LINE

N

0 10 20
(SCALE IN FEET)

SITE PLAN BASED ON DRAWING PROVIDED BY
K C DEVELOPMENT
MAY 17, 2005

HORIZONTAL 0 10 20 (SCALE IN FEET)

VERTICAL 0 10 20 (SCALE IN FEET)

CLEANUP ACTION AREA 2 DETAIL VIEWS

FIGURE 8

THE VILLAGE AT EVERGREEN
VANCOUVER, WA

BONESCONST-7-01

JUNE 2008

GEODESIGN INC
1201 SE Tech Center Drive - Suite 160
Vancouver WA 98683
Off 360.693.8416 Fax 360.693.8426

Printed By: rfreeman | Print Date: 6/13/2008 1:40:34 PM
File Name: J:\A-D\BonesConst\BonesConst-7\BonesConst-7-01\Figures\CAD\Final_Report_Figures\BonesConst-7-01-F2-17-SP.dwg | Layout: Figure 8