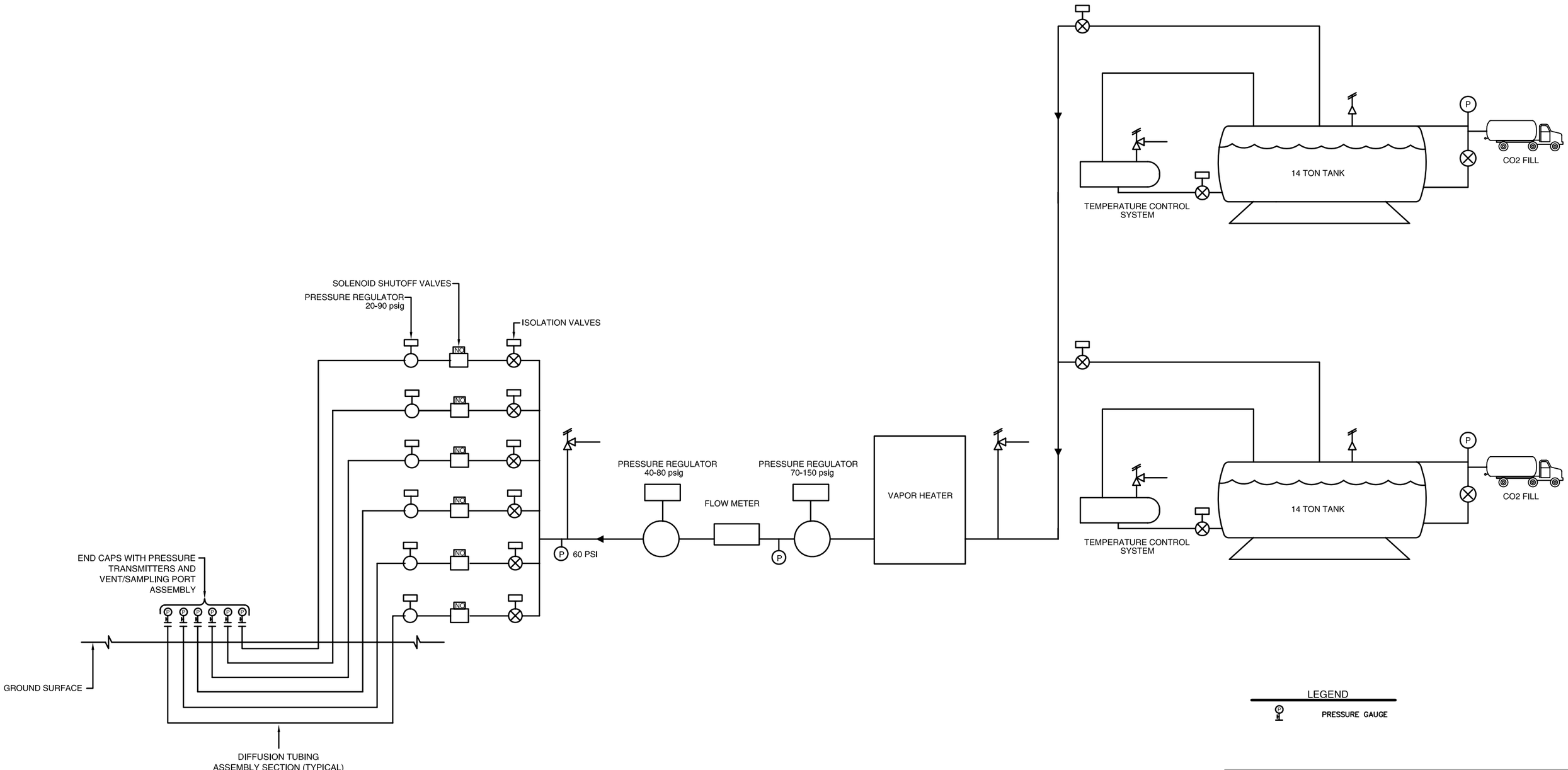

LEHIGH HEIDELBERGCEMENT Group

GEOSYNTEC CONSULTANTS
2100 MAIN STREET, SUITE 150
HUNTINGTON BEACH, CALIFORNIA 92648
TELEPHONE: (714) 969-0800

PROJECT: LEHIGH CEMENT COMPANY CLOSED CKD PILE SITE
METALINE FALLS, WASHINGTON

TITLE: CARBON DIOXIDE PROCESS FLOW DIAGRAM

DATE:	JUNE 2006	CHECKED BY:	EDS	SCALE:	AS SHOWN	FIGURE NO:	3-5
DESIGN BY:	BLP	REVIEWED BY: (PROJ. MGR.)	EDS	JOB NO.:	HR0996-03		
DRAWN BY:	SLB	DOCUMENT NO:	EDR	FILE NO:	0996-010		

N:\CACADD\HR0996\General\0996-010.dwg 9/04/06 10:42 SBerdy