Stormwater Management in Western Washington

Volume III
Hydrologic Analysis and Flow Control Design/BMPs

Prepared by:
Washington State Department of Ecology
Water Quality Program

February 2005
Publication No. 05-10-31
(A revision of Publication No. 99-13)

printed on recycled paper

Acknowledgments

The 2001 edition of this volume of the manual was updated with advice and consultation from a technical advisory group comprised of people with considerable expertise and practical perspective. Ecology wishes to thank the following for volunteering their time and sharing their expertise.

Name	**Affiliation**
Doug Beyerlein	AQUA TERRA Consultants
Tom Holz	SCA Engineering
Richard Lindberg	Consulting Engineer
Bruce Barker	MGS Consultants
Rose Peralta	WSDOT, Tumwater
Mike Heden	WSDOT, Spokane
Kelly Whiting	King County Dept. of Natural Resources
Malcolm Leytham	Northwest Hydraulic Consultants
Jim Albrecht	Consulting Engineer
Tony Allen	WSDOT
Larry West	HWA Geosciences, Inc.
Mark Blosser	City of Olympia
Ed Wiltsie	Jerome W. Morrissette & Associates

Ecology Technical Lead

Foroozan Labib – 2001 and 2005 updates
Ed O'Brien – 2005 update

Technical Review and Editing

Economic and Engineering Services, Inc. – 2001 update
Charlene Witczak – 2005 update
Kelsey Highfill – 2005 update

Table of Contents

Acknowledgments ..... **i**

Chapter 1 - Introduction **1-1**

1.1 Purpose of this Volume 1-1
1.2 Content and Organization of this Volume 1-1
1.3 How to Use this Volume 1-2

Chapter 2 - Hydrologic Analysis **2-1**

2.1 Minimum Computational Standards 2-1
2.1.1 Discussion of Hydrologic Analysis Methods Used for Designing BMPs 2-3
2.2 Western Washington Hydrology Model 2-4
2.3 Single Event Hydrograph Method 2-9
2.3.1 Water Quality Design Storm 2-10
2.3.2 Runoff Parameters 2-11
2.4 Closed Depression Analysis 2-17

Chapter 3 - Flow Control Design **3-1**

3.1 Roof Downspout Controls 3-2
3.1.1 Downspout Infiltration Systems 3-4
3.1.2 Downspout Dispersion Systems 3-11
3.1.3 Perforated Stub-Out Connections 3-17
3.2 Detention Facilities 3-19
3.2.1 Detention Ponds 3-19
3.2.2 Detention Tanks 3-40
3.2.3 Detention Vaults 3-46
3.2.4 Control Structures 3-50
3.2.5 Other Detention Options 3-64
3.3 Infiltration Facilities for Flow Control and for Treatment 3-65
3.3.1 Purpose 3-65
3.3.2 Description 3-65
3.3.3 Applications 3-65
3.3.4 Simplified Approach (Figure 3.26) 3-67
3.3.5 Site Characterization Criteria 3-70
3.3.6 Design Infiltration Rate Determination – Guidelines and Criteria 3-75
3.3.7 Site Suitability Criteria (SSC) 3-81
3.3.8 Detailed Approach (Figure 3.29) 3-85
3.3.9 General Design, Maintenance, and Construction Criteria for Infiltration Facilities 3-94
3.3.10 Infiltration Basins 3-97
3.3.11 Infiltration Trenches 3-98

Volume III References **Ref-1**

Appendix III-A Isopluvial Maps for Design Storms A-1

Appendix III-B Western Washington Hydrology Model – Information, Assumptions, and Computation Steps B-1

Appendix III-C Washington State Department of Ecology Low Impact Development Design and Flow Modeling Guidance C-1

Appendix III-D Procedure for Conducting a Pilot Infiltration Test D-1

Tables

Table 2.1 Hydrologic Soil Series for Selected Soils in Washington State 2-11

Table 2.2 Runoff Curve Numbers for Selected Agricultural, Suburban, and Urban Areas 2-15

Table 3.1 Small Trees and Shrubs with Fibrous Roots 3-28

Table 3.2 Stormwater Tract "Low Grow" Seed Mix 3-30

Table 3.3 Specific Maintenance Requirements for Detention Ponds 3-36

Table 3.4 Specific Maintenance Requirements for Detention Vaults/Tanks 3-43

Table 3.5 Maintenance of Control Structures and Catchbasins 3-55

Table 3.6 Values of C_d for Sutro Weirs 3-62

Table 3.7 Recommended Infiltration Rates based on USDA Soil Textural Classification. 3-76

Table 3.8 Alternative Recommended Infiltration Rates based on ASTM Gradation Testing. 3-77

Table 3.9 Correction Factors to be Used With In-Situ Infiltration Measurements to Estimate Long-Term Design Infiltration Rates 3-80

Table 3-10 Infiltration Rate Reduction Factors to Account for Biofouling and Siltation Effects for Ponds 3-92

Figures

Figure 3.1 Flow Diagram Showing Selection of Roof Downspout Controls 3-3
Figure 3.2 Typical Downspout Infiltration Trench 3-7
Figure 3.3 Alternative Downspout Infiltration Trench System for Coarse Sand and Gravel 3-8
Figure 3.4 Typical Downspout Infiltration Drywell 3-9
Figure 3.5 Typical Downspout Dispersion Trench 3-13
Figure 3.6 Standard Dispersion Trench with Notched Grade Board 3-14
Figure 3.7 Typical Downspout Splashblock Dispersion 3-16
Figure 3.8 Perforated Stub-Out Connection 3-18
Figure 3.9 Typical Detention Pond 3-31
Figure 3.10 Typical Detention Pond Sections 3-32
Figure 3.11 Overflow Structure 3-33
Figure 3.12 Example of Permanent Surface Water Control Pond Sign 3-34
Figure 3.13 Weir Section for Emergency Overflow Spillway 3-40
Figure 3.14 Typical Detention Tank 3-44
Figure 3.15 Detention Tank Access Detail 3-45
Figure 3.16 Typical Detention Vault 3-49
Figure 3.17 Flow Restrictor (TEE) 3-52
Figure 3.18 Flow Restrictor (Baffle) 3-53
Figure 3.19 Flow Restrictor (Weir) 3-54
Figure 3.20 Simple Orifice 3-58
Figure 3.21 Rectangular, Sharp-Crested Weir 3-59
Figure 3.22 V-Notch, Sharp-Crested Weir 3-60
Figure 3.23 Sutro Weir 3-61
Figure 3.24 Riser Inflow Curves 3-63
Figure 3.25 Typical Infiltration Pond/Basin 3-66
Figure 3.26 Steps for Design of Infiltration Facilities – Simplified Approach 3-69
Figure 3.27 USDA Textural Triangle 3-74
Figure 3.28 Infiltration Rate as a Function of the D10 Size of the Soil ..... for Ponds in Western Washington 3-78
Figure 3.29 Engineering Design Steps for Final Design of Infiltration Facilities Using the Continuous Hydrograph Method 3-88
Figure 3.30 Schematic of an Infiltration Trench 3-99
Figure 3.31 Parking Lot Perimeter Trench Design 3-99

Figure 3.32 Median Strip Trench Design 3-100
Figure 3.33 Oversized Pipe Trench Design 3-100
Figure 3.34 Swale/Trench Design 3-101
Figure 3.35 Underground Trench with Oil/Grit Chamber 3-101
Figure 3.36 Observation Well Details 3-104

Chapter 1 - Introduction

1.1 Purpose of this Volume

Best Management Practices (BMPs) are schedules of activities, prohibitions of practices, maintenance procedures, managerial practices, or structural features that prevent or reduce adverse impacts to waters of Washington State. As described in Volume I of this stormwater manual, BMPs for long-term management of stormwater at developed sites can be divided into three main categories:

- BMPs addressing the volume and timing of stormwater flows;
- BMPs addressing prevention of pollution from potential sources; and
- BMPs addressing treatment of runoff to remove sediment and other pollutants.

This volume of the stormwater manual focuses mainly on the first category. It presents techniques of hydrologic analysis, and BMPs related to management of the amount and timing of stormwater flows from developed sites. The purpose of this volume is to provide guidance on the estimation and control of stormwater runoff quantity.

BMPs for preventing pollution of stormwater runoff and for treating contaminated runoff are presented in Volumes IV and V, respectively.

1.2 Content and Organization of this Volume

Volume III of the stormwater manual contains three chapters. Chapter 1 serves as an introduction. Chapter 2 reviews methods of hydrologic analysis, covers the use of hydrograph methods for designing BMPs, and provides an overview of various computerized modeling methods and analysis of closed depressions. Chapter 3 describes flow control BMPs and provides design specifications for roof downspouts and detention facilities. It also provides design considerations of infiltration facilities for flow control.

This volume includes three appendices. Appendix A has isopluvial maps for western Washington. Appendix B has information and assumptions on the Western Washington Hydrology Model (WWHM). Appendix C includes detailed information concerning how to represent various Low Impact Development (LID) techniques in continuous runoff models so that the models predict lower surface runoff rates and volumes.

Design considerations for conveyance systems are not included in the stormwater manual, as this topic is adequately covered in standard engineering references.

1.3 How to Use this Volume

Volume I should be consulted to determine Minimum Requirements for flow management (e.g. Minimum Requirements #4, #5 and #7 in Chapter 2 of Volume I). After the Minimum Requirements have been determined, this volume should be consulted to design flow management facilities. These facilities can then be included in Stormwater Site Plans (see Volume I, Chapter 3).

Chapter 2 - Hydrologic Analysis

The broad definition of hydrology is "the science which studies the source, properties, distribution, and laws of water as it moves through its closed cycle on the earth (the hydrologic cycle)." As applied in this manual, however, the term "hydrologic analysis" addresses and quantifies only a small portion of this cycle. That portion is the relatively short-term movement of water over the land resulting directly from precipitation and called surface water or stormwater runoff. Localized and long-term ground water movement must also be of concern, but generally only as this relates to the movement of water on or near the surface, such as stream base flow or infiltration systems.

The purpose of this chapter is to define the minimum computational standards required, to outline how these may be applied, and to reference where more complete details may be found, should they be needed. This chapter also provides details on the hydrologic design process; that is, what are the steps required in conducting a hydrologic analysis, including flow routing.

2.1 Minimum Computational Standards

The minimum computational standards depend on the type of information required and the size of the drainage area to be analyzed, as follows:

1. For the purpose of designing most types of runoff treatment BMPs, a calibrated continuous simulation hydrologic model based on the EPA's HSPF (Hydrologic Simulation Program-Fortran) program, or an approved equivalent model, must be used to calculate runoff and determine the water quality design flow rates and volumes.

   For the purpose of designing wetpool treatment facilities, there are two acceptable methods: an approved continuous runoff model to estimate the 91st percentile, 24-hour runoff volume, or the NRCS (Natural Resources Conservation Service) curve number method to determine a water quality design storm volume. The water quality design storm volume is the amount of runoff predicted from the 6-month, 24-hour storm.

   For the purpose of designing flow control BMPs, a calibrated continuous simulation hydrologic model, based on the EPA's HSPF, must be used.

   The circumstances under which different methodologies apply are summarized below.

Summary of the application design methodologies		
	BMP designs in western Washington	
Method	**Treatment**	**Flow Control**
SCSUH/SBUH (Soil Conservation Service Unit Hydrograph/Santa Barbara Unit Hydrograph)	Method applies for BMPs that are sized based on the volume of runoff from a 6-month, 24-hour storm. Currently, that includes only wetpool-facilities. **Note**: These BMPs don't require generating a hydrograph.	Not Applicable
Continuous Runoff Models: (WWHM or approved alternatives. See below)	Method applies to all BMPs.	Method applies throughout Western Washington

2. If a basin plan is being prepared, then a hydrologic analysis should be performed using a continuous simulation model such as the EPA's HSPF model, the EPA's Stormwater Management Model (SWMM), or an equivalent model as approved by the local government.

   Significant progress has been made in the development and availability of HSPF-based continuous runoff models for Western Washington. The Department of Ecology has coordinated the development of the Western Washington Hydrology Model (WWHM). It uses rainfall/runoff relationships developed for specific basins in the Puget Sound region to all parts of western Washington. Where field monitoring establishes basin-specific rainfall/runoff parameter calibrations, those can be entered into the model, superseding the default input parameters.

   Two other HSPF-based continuous runoff models have been approved by the Department of Ecology: MGS Flood and KCRTS (King County Runoff Time Series). Though MGS Flood uses different, extended precipitation files, its features and more importantly, its runoff estimations are very similar to those predicted by WWHM. KCRTS is a pre-packaged set of runoff files developed by King County. It can be used throughout King County. Use of other continuous simulation models should receive prior concurrence from the Dept. of Ecology.

   Where large master-planned developments are proposed, local governments should consider requiring a basin-specific calibration of HSPF rather than use of the default parameters in the above-referenced models. The Department of Ecology suggests such

basin-specific calibrations should be considered for projects that will occupy more than 320 acres.

2.1.1 Discussion of Hydrologic Analysis Methods Used for Designing BMPs

This section provides a discussion of the methodologies to be used for calculating stormwater runoff from a project site. It includes a discussion of estimating stormwater runoff with single event models, such as the SBUH, versus continuous simulation models.

Single Event and Continuous Simulation Model

A continuous simulation model has considerable advantages over the single event-based methods such as the SCSUH, SBUH, or the Rational Method. HSPF is a continuous simulation model that is capable of simulating a wider range of hydrologic responses than the single event models such as the SBUH method. Single event models cannot take into account storm events that may occur just before or just after the single event (the design storm) that is under consideration. In addition, the runoff files generated by the HSPF models are the result of a considerable effort to introduce local parameters and actual rainfall data into the model and therefore produce better estimations of runoff than the SCSUH, SBUH, or Rational methods.

Ecology has developed a continuous simulation hydrologic model (WWHM) based on the HSPF for use in western Washington (see Section 2.2). Continuous rainfall records/data files have been obtained and appropriate adjustment factors were developed as input to HSPF. Input algorithms (referred to as IMPLND and PERLND) have been developed for a number of watershed basins in King, Pierce, Snohomish, and Thurston counties. These rainfall files and model algorithms are used in the HSPF in western Washington. Local counties and cities are encouraged to develop basin-specific calibrations of HSPF that can be input into the WWHM. However, until such a calibration is developed for a specific basin, the input data mentioned above must be used throughout western Washington.

Concerns with SBUH

A summary of the concerns with SBUH and other single event models is in order.

- While SBUH may give acceptable estimates of total runoff volumes, it tends to overestimate peak flow rates from pervious areas because it cannot adequately model subsurface flow (which is a dominant flow regime for pre-development conditions in western Washington basins). One reason SBUH overestimates the peak flow rate for pervious areas

is that the actual time of concentration is typically greater than what is assumed. Better flow estimates could be made if a longer time of concentration was used. This would change both the peak flow rate (i.e., it would be lower) and the shape of the hydrograph (i.e., peak occurs somewhat later) such that the hydrograph would better reflect actual predeveloped conditions.

Another reason for overestimation of the runoff is the curve numbers (CN) in the 1992 Manual. These curve numbers were developed by US-Natural Resources Conservation Service (NRCS), formerly the Soil Conservation Service (SCS) and published as the Western Washington Supplemental Curve Numbers. These CN values are typically higher than the standard CN values published in Technical Release 55, June 1986. In 1995, the NRCS recalled the use of the western Washington CNs for floodplain management and found that the standard CNs better describe the hydrologic conditions for rainfall events in western Washington. However, based on runoff comparisons with the KCRTS better estimates of runoff are obtained when using the western Washington CNs for the developed areas such as parks, lawns, and other landscaped areas. Accordingly, the CNs in this manual (see Table 2.3) are changed to those in the Technical Release 55 except for the open spaces category for the developed areas which include, lawn, parks, golf courses, cemeteries, and landscaped areas. For these areas, the western Washington CNs are used. These changes are intended to provide better runoff estimates using the SBUH method.

Another major weakness of SBUH is that it is used to model a 24-hour storm event, which is too short to model longer-term storms in western Washington. The use of a longer-term (e.g. 3- or 7-day storm) is perhaps better suited for western Washington.

Related to the last concern is the fact that single event approaches, such as SBUH, assume that flow control ponds are empty at the start of the design event. Continuous runoff models are able to simulate a continuous long-term record of runoff and soil moisture conditions. They simulate situations where ponds are not empty when another rain event begins.

Finally, single event models do not allow for estimation and analyses of flow durations nor water level fluctuations. Flow durations are necessary for discharges to streams. Estimates of water level fluctuations are necessary for discharges to wetlands and for tracking influent water elevations and bypass quantities to properly size treatment facilities.

2.2 Western Washington Hydrology Model

This section summarizes the assumptions made in creating the western Washington Hydrology Model (WWHM) and discusses limitations of the

model. More information on the WWHM and the assumptions can be found in Appendix III-B.

Limitations to the WWHM

The WWHM has been created for the specific purpose of sizing stormwater control facilities for new developments in western Washington. The WWHM can be used for a range of conditions and developments; however, certain limitations are inherent in this software. These limitations are described below.

> The WWHM uses the EPA HSPF software program to do all of the rainfall-runoff and routing computations. Therefore, HSPF limitations are included in the WWHM. For example, backwater or tailwater control situations are not explicitly modeled by HSPF. This is also true in the WWHM.

In addition, the WWHM is limited in its routing capabilities. The user is allowed to input multiple stormwater control facilities and runoff is routed through them. If the proposed development site involves routing through a natural lake or wetland in addition to multiple stormwater control facilities then the user should use HSPF to do the routing computations and additional analysis.

Routing effects become more important as the drainage area increases. For this reason it is recommended that the WWHM not be used for drainage areas greater than one-half square mile (320 acres). The WWHM can be used for small drainage areas less than an acre in size.

Assumptions made in creating the WWHM

Precipitation data.

- The WWHM uses long-term (43-50 years) precipitation data to simulate the potential impacts of land use development in western Washington. A minimum period of 20 years is required to simulate enough peak flow events to produce accurate flow frequency results.
- A total of 17 precipitation stations are used, representing the different rainfall regimes found in western Washington.
- These stations represent rainfall at elevations below 1500 feet - snowfall and snowmelt are not included in the WWHM.
- The primary source for precipitation data is National Weather Service stations.
- The base computational time step used in the WWHM is one hour. The one-hour time step was selected to better represent the temporal

variability of actual precipitation than daily data. Based on more frequent (15-minute) rain data collected over 25 years in Seattle, a relationship has been developed and incorporated in WWHM for converting the 60-minute water quality design flows to 15-minute flows. The 15-minute water quality design flows are more appropriate and must be used for design of water quality treatment facilities that are expected to have a hydraulic residence time of less than one hour.

Precipitation multiplication factors.

- The WWHM uses precipitation multiplication factors to increase or decrease recorded precipitation data to better represent local rainfall conditions.
- The factors are based on the ratio of the 24-hour, 25-year rainfall intensities for the representative precipitation gage and the surrounding area represented by that gage's record.
- The factors have been placed in the WWHM database and linked to each county's map. They will be transparent to the general user, however the advanced user will have the ability to change the coefficient for a specific site. Changes made by the user will be recorded in the WWHM output. By default, WWHM does not allow the precipitation multiplication factor to go below 0.8 or above 2.

Pan evaporation data.

- The WWHM uses pan evaporation coefficients to compute the actual evapotranspiration potential (AET) for a site, based on the potential evapotranspiration (PET) and available moisture supply. AET accounts for the precipitation that returns to the atmosphere without becoming runoff.
- The pan evaporation coefficients have been placed in the WWHM database and linked to each county's map. They will be transparent to the general user. The advanced user will have the ability to change the coefficient for a specific site. These changes will be recorded in the WWHM output.

Soil data.

- The WWHM uses three predominate soil type to represent the soils of western Washington: till, outwash, and saturated.
- The user determines actual local soil conditions for the specific development planned and inputs that data into the WWHM. The user inputs the number of acres of outwash (A/B), till (C/D), and saturated (wetland) soils for the site conditions.
- Additional soils will be included in the WWHM if appropriate HSPF parameter values are found to represent other major soil groups.

Vegetation data.

- The WWHM will represent the vegetation of western Washington with three predominate vegetation categories: forest, pasture, and lawn (also known as grass).
- The predevelopment land conditions are generally assumed as forest (the default condition), however, the user has the option of specifying pasture if there is documented evidence that pasture vegetation was native to the predevelopment site. In highly urbanized basins (see Minimum Requirement #7 in Volume I, Chapter 2, it is possible to use the existing land cover as the pre-developed land condition.

Development land use data.

- Development land use data are used to represent the type of development planned for the site and are used to determine the appropriate size of the required stormwater mitigation facility.
- Among the land uses options, WWHM includes a Standard residential development which makes specific assumptions about the amount of impervious area per lot and its division between driveways and rooftops. Streets and sidewalk areas are input separately. Ecology has selected a standard impervious area of 4200 square feet per residential lot, with 1000 square feet of that as driveway, walkways, and patio area, and the remainder as rooftop area.
- The WWHM distinguishes between effective impervious area and non-effective impervious area in calculating total impervious area.
- Credits are given for infiltration and dispersion of roof runoff and for use of porous pavement for driveway areas. The WWHM2 currently includes an option for obtaining credits for the use of porous pavements on Streets/Sidewalk/Parking. The credit given under this option is believed to be too small. Until such time as WWHM2 is upgraded to WWHM3, the LID credit guidance in Appendix C should be followed for porous pavements.
- Forest and pasture vegetation areas are only appropriate for separate undeveloped parcels dedicated as open space, wetland buffer, or park within the total area of the development. ***Development areas must only be designated as forest or pasture where legal restrictions can be documented that protect these areas from future disturbances.***
- The WWHM can model bypassing a portion of the runoff from the development area around a stormwater detention facility and/or having offsite inflow enter the development area.

<u>Application of WWHM in Re-developments Projects</u>

Redevelopment requirements may allow, for some portions of the redevelopment project area, the predeveloped condition to be modeled as the existing condition rather than forested or pasture condition. For instance, where the replaced impervious areas do not have to be served by updated flow control facilities because area or cost thresholds in Section 2.4.2 of Volume I are not exceeded. .

Pervious and Impervious Land Categories (PERLND and IMPLND parameter values)

- In WWHM (and HSPF) pervious land categories are represented by PERLNDs; impervious land categories by IMPLNDs
- The WWHM provides 16 unique PERLND parameters that describe various hydrologic factors that influence runoff and 4 parameters to represent IMPLND.
- These values are based on regional parameter values developed by the U.S. Geological Survey for watersheds in western Washington (Dinicola, 1990) plus additional HSPF modeling work conducted by AQUA TERRA Consultants.
- Surface runoff and interflow will be computed based on the PERLND and IMPLND parameter values. Groundwater flow can also be computed and added to the total runoff from a development if there is a reason to believe that groundwater would be surfacing (such where there is a cut in a slope). However, the default condition in WWHM assumes that no groundwater flow from small catchments reaches the surface to become runoff. This is consistent with King County procedures (King County, 1998).

Guidance for flow control standards.

Flow control standards are used to determine whether or not a proposed stormwater facility will provide a sufficient level of mitigation for the additional runoff from land development.

There are two flow control standards stated in the Ecology Manual: Minimum Requirement #7 - Flow Control and Minimum Requirement #8 - Wetlands Protection (See Volume I). Minimum Requirement #7 specifies specific flow frequency and flow duration ranges for which the postdevelopment runoff cannot exceed predevelopment runoff. Minimum Requirement #8 specifies that discharges to wetlands must maintain the hydrologic conditions, hydrophytic vegetation, and substrate characteristics necessary to support existing and designated beneficial uses.

Minimum Requirement #7 specifies that stormwater discharges to streams shall match developed discharge durations to predeveloped durations for the range of predeveloped discharge rates from 50% of the 2-year peak flow up to the full 50-year peak flow. .

- The WWHM computes the predevelopment 2- through 100-year flow frequency values and computes the post-development runoff 2- through 100-year flow frequency values from the outlet of the proposed stormwater facility.

- The model uses pond discharge data to compare the predevelopment and postdevelopment durations and determines if the flow control standards have been met.

- There are three criteria by which flow duration values are compared:

  1. If the postdevelopment flow duration values exceed any of the predevelopment flow levels between 50% and 100% of the 2-year predevelopment peak flow values (100 Percent Threshold) then the flow duration requirement has not been met.

  2. If the postdevelopment flow duration values exceed any of the predevelopment flow levels between 100% of the 2-year and 100% of the 50-year predevelopment peak flow values more than 10 percent of the time (110 Percent Threshold) then the flow duration requirement has not been met.

  3. If more than 50 percent of the flow duration levels exceed the 100 percent threshold then the flow duration requirement has not been met.

Minimum Requirement #8 specifies that discharges to wetlands must maintain the hydrologic conditions, hydrophytic vegetation, and substrate characteristics necessary to support existing and designated beneficial uses. Criteria for determining maximum allowed exceedences in alterations to wetland hydroperiods are provided in guidelines cited in Guide Sheet 2B of the Puget Sound Wetland Guidelines (Azous and Horner, 1997). Because wetland hydroperiod computations are relatively complex and are site specific they have not yet been included in the WWHM2. HSPF is required for wetland hydroperiod analysis. Ecology intends to include the ability to perform hydroperiod computations in WWHM3.

2.3 Single Event Hydrograph Method

Hydrograph analysis utilizes the standard plot of runoff flow versus time for a given design storm, thereby allowing the key characteristics of runoff

such as peak, volume, and phasing to be considered in the design of drainage facilities. Because the only utility for single event methods in this manual is to size wet pool treatment facilities, only the subjects of design storms, curve numbers and calculating runoff volumes are presented. If single event methods are used to size temporary and permanent conveyances, the reader should reference other texts and software for assistance.

2.3.1 Water Quality Design Storm

The design storm for sizing wetpool treatment facilities is the 6-month, 24-hour storm. Unless amended to reflect local precipitation statistics, the 6-month, 24-hour precipitation amount may be assumed to be 72 percent of the 2-year, 24-hour amount. Precipitation estimates of the 6-month and 2-year, 24-hour storms for certain towns and cities are listed in Appendix 1-B of Volume I. For other areas, interpolating between isopluvials for the 2-year, 24-hour precipitation and multiplying by 72% yields the appropriate storm size.

The total depth of rainfall (in tenths of an inch) for storms of 24-hour duration and 2, 5, 10, 25, 50, and 100-year recurrence intervals are published by the National Oceanic and Atmospheric Administration (NOAA). The information is presented in the form of "isopluvial" maps for each state. Isopluvial maps are maps where the contours represent total inches of rainfall for a specific duration. Isopluvial maps for the 2, 5, 10, 25, 50, and 100-year recurrence interval and 24-hour duration storm events can be found in the NOAA Atlas 2, "Precipitation - Frequency Atlas of the Western United States, Volume IX-Washington." Appendix II-A provides the isopluvials for the 2, 10, and 100-year, 24-hour design storms. Other precipitation frequency data may be obtained through Western Regional Climate Center (WRCC) at Tel: (775) 674-7010. WRCC can generate 1-30 day precipitation frequency data for the location of interest using data from 1948 to present (currently August 2000).

2.3.2 Runoff Parameters

All storm event hydrograph methods require input of parameters that describe physical drainage basin characteristics. These parameters provide the basis from which the runoff hydrograph is developed. This section describes only the key parameter of curve number that is used to estimate the runoff from the water quality design storm. .

Curve Number

The NRCS (formerly SCS) has, for many years, conducted studies of the runoff characteristics for various land types. After gathering and analyzing extensive data, NRCS has developed relationships between land use, soil type, vegetation cover, interception, infiltration, surface storage, and runoff. The relationships have been characterized by a single runoff coefficient called a "curve number." The National Engineering Handbook - Section 4: Hydrology (NEH-4, SCS, August 1972) contains a detailed description of the development and use of the curve number method.

NRCS has developed "curve number" (CN) values based on soil type and land use. They can be found in "Urban Hydrology for Small Watersheds", Technical Release 55 (TR-55), June 1986, published by the NRCS. The combination of these two factors is called the "soil-cover complex." The soil-cover complexes have been assigned to one of four hydrologic soil groups, according to their runoff characteristics. NRCS has classified over 4,000 soil types into these four soil groups. Table 2.2 shows the hydrologic soil group of most soils in the state of Washington and provides a brief description of the four groups. For details on other soil types refer to the NRCS publication mentioned above (TR-55, 1986).

Table 2.1 Hydrologic Soil Series for Selected Soils in Washington State

Soil Type	Hydrologic Soil Group	Soil Type	Hydrologic Soil Group
Agnew	C	Hoko	C
Ahl	B	Hoodsport	C
Aits	C	Hoogdal	C
Alderwood	C	Hoypus	A
Arents, Alderwood	B	Huel	A
Arents, Everett	B	Indianola	A
Ashoe	B	Jonas	B
Baldhill	B	Jumpe	B
Barneston	C	Kalaloch	C
Baumgard	B	Kapowsin	C/D
Beausite	B	Katula	C
Belfast	C	Kilchis	C
Bellingham	D	Kitsap	C
Bellingham variant	C	Klaus	C
Boistfort	B	Klone	B
Bow	D	Lates	C
Briscot	D	Lebam	B
Buckley	C	Lummi	D
Bunker	B	Lynnwood	A
Cagey	C	Lystair	B
Carlsborg	A	Mal	C
Casey	D	Manley	B

Table 2.1 Hydrologic Soil Series for Selected Soils in Washington State			
Soil Type	**Hydrologic Soil Group**	**Soil Type**	**Hydrologic Soil Group**
Cassolary	C	Mashel	B
Cathcart	B	Maytown	C
Centralia	B	McKenna	D
Chehalis	B	McMurray	D
Chesaw	A	Melbourne	B
Cinebar	B	Menzel	B
Clallam	C	Mixed Alluvial	variable
Clayton	B	Molson	B
Coastal beaches	variable	Mukilteo	C/D
Colter	C	Naff	B
Custer	D	Nargar	A
Custer, Drained	C	National	B
Dabob	C	Neilton	A
Delphi	D	Newberg	B
Dick	A	Nisqually	B
Dimal	D	Nooksack	C
Dupont	D	Norma	C/D
Earlmont	C	Ogarty	C
Edgewick	C	Olete	C
Eld	B	Olomount	C
Elwell	B	Olympic	B
Esquatzel	B	Orcas	D
Everett	A	Oridia	D
Everson	D	Orting	D
Galvin	D	Oso	C
Getchell	A	Ovall	C
Giles	B	Pastik	C
Godfrey	D	Pheeney	C
Greenwater	A	Phelan	D
Grove	C	Pilchuck	C
Harstine	C	Potchub	C
Hartnit	C	Poulsbo	C
Hoh	B	Prather	C
Puget	D	Solleks	C
Puyallup	B	Spana	D
Queets	B	Spanaway	A/B
Quilcene	C	Springdale	B
Ragnar	B	Sulsavar	B
Rainier	C	Sultan	C
Raught	B	Sultan variant	B
Reed	D	Sumas	C
Reed, Drained or Protected	C	Swantown	D
Renton	D	Tacoma	D
Republic	B	Tanwax	D
Riverwash	variable	Tanwax, Drained	C
Rober	C	Tealwhit	D
Salal	C	Tenino	C
Salkum	B	Tisch	D
Sammamish	D	Tokul	C
San Juan	A	Townsend	C
Scamman	D	Triton	D
Schneider	B	Tukwila	D
Seattle	D	Tukey	C
Sekiu	D	Urbana	C
Semiahmoo	D	Vailton	B
Shalcar	D	Verlot	C
Shano	B	Wapato	D
Shelton	C	Warden	B
Si	C	Whidbey	C

Table 2.1 Hydrologic Soil Series for Selected Soils in Washington State			
Soil Type	**Hydrologic Soil Group**	**Soil Type**	**Hydrologic Soil Group**
Sinclair	C	Wilkeson	B
Skipopa	D	Winston	A
Skykomish	B	Woodinville	B
Snahopish	B	Yelm	C
Snohomish	D	Zynbar	B
Solduc	B		

Notes:

Hydrologic Soil Group Classifications, as Defined by the Soil Conservation Service:

A = *(Low runoff potential) Soils having low runoff potential and high infiltration rates, even when thoroughly wetted. They consist chiefly of deep, well to excessively drained sands or gravels and have a high rate of water transmission (greater than 0.30 in/hr.).*

B = *(Moderately low runoff potential). Soils having moderate infiltration rates when thoroughly wetted and consist chiefly of moderately deep to deep, moderately well to well drained soils with moderately fine to moderately coarse textures. These soils have a moderate rate of water transmission (0.15-0.3 in/hr.).*

C = *(Moderately high runoff potential). Soils having low infiltration rates when thoroughly wetted and consist chiefly of soils with a layer that impedes downward movement of water and soils with moderately fine to fine textures. These soils have a low rate of water transmission (0.05-0.15 in/hr.).*

D = *(High runoff potential). Soils having high runoff potential. They have very low infiltration rates when thoroughly wetted and consist chiefly of clay soils with a high swelling potential, soils with a permanent high water table, soils with a hardpan or clay layer at or near the surface, and shallow soils over nearly impervious material. These soils have a very low rate of water transmission (0-0.05 in/hr.).*

* = *From SCS, TR-55, Second Edition, June 1986, Exhibit A-1. Revisions made from SCS, Soil Interpretation Record, Form #5, September 1988 and various county soil surveys.*

Table 2.3 shows the CNs, by land use description, for the four hydrologic soil groups. These numbers are for a 24-hour duration storm and typical antecedent soil moisture condition preceding 24-hour storms.

The following are important criteria/considerations for selection of CN values:

Many factors may affect the CN value for a given land use. For example, the movement of heavy equipment over bare ground may compact the soil so that it has a lesser infiltration rate and greater runoff potential than would be indicated by strict application of the CN value to developed site conditions.

CN values can be area weighted when they apply to pervious areas of similar CNs (within 20 CN points). However, high CN areas should not be combined with low CN areas. In this case, separate estimates of S (potential maximum natural detention) and Q_d (runoff depth) should be generated and summed to obtain the cumulative runoff volume unless the low CN areas are less than 15 percent of the subbasin.

Separate CN values must be selected for the pervious and impervious areas of an urban basin or subbasin. For residential districts the percent impervious area given in Table 2.3 must be used to compute the respective

pervious and impervious areas. For proposed commercial areas, planned unit developments, etc., the percent impervious area must be computed from the site plan. For all other land uses the percent impervious area must be estimated from best available aerial topography and/or field reconnaissance. The pervious area CN value must be a weighted average of all the pervious area CNs within the subbasin. The impervious area CN value shall be 98.

Example: The following is an example of how CN values are selected for a sample project.

Select CNs for the following development:

Existing Land Use	-	forest (undisturbed)
Future Land Use	-	residential plat (3.6 DU/GA)
Basin Size	-	60 acres
Soil Type	-	80 percent Alderwood, 20 percent Ragnor

Table 2.2 shows that Alderwood soil belongs to the "C" hydrologic soil group and Ragnor soil belongs to the "B" group. Therefore, for the existing condition, CNs of 70 and 55 are read from Table 2.3 and areal weighted to obtain a CN value of 67. For the developed condition with 3.6 DU/GA the percent impervious of 39 percent is interpolated from Table 2.3 and used to compute pervious and impervious areas of 36.6 acres and 23.4 acres, respectively. The 36.6 acres of pervious area is assumed to be in Fair condition (for a conservative design) with residential yards and lawns covering the same proportions of Alderwood and Ragnor soil (80 percent and 20 percent respectively). Therefore, CNs of 90 and 85 are read from Table 2.3 and areal weighted to obtain a pervious area CN value of 89. The impervious area CN value is 98. The result of this example is summarized below:

On-Site Condition	Existing	Developed
Land use	Forest	Residential
Pervious area	60 ac.	36.6 ac.
CN of pervious area	67	89
Impervious area	0 ac.	23.4 ac.
CN of impervious area	--	98

Table 2.2
Runoff Curve Numbers for Selected Agricultural, Suburban, and Urban Areas

(Sources: TR 55, 1986, and Stormwater Management Manual, 1992. See Section 2.1.1 for explanation)

Cover type and hydrologic condition.	CNs for hydrologic soil group A	B	C	D
Curve Numbers for Pre-Development Conditions				
Pasture, grassland, or range-continuous forage for grazing:				
Fair condition (ground cover 50% to 75% and not heavily grazed).	49	69	79	84
Good condition (ground cover >75% and lightly or only occasionally grazed)	39	61	74	80
Woods:				
Fair (Woods are grazed but not burned, and some forest litter covers the soil).	36	60	73	79
Good (Woods are protected from grazing, and litter and brush adequately cover the soil).	30	55	70	77
Curve Numbers for Post-Development Conditions				
Open space (lawns, parks, golf courses, cemeteries, landscaping, etc.)[1]				
Fair condition (grass cover on 50% - 75% of the area).	77	85	90	92
Good condition (grass cover on >75% of the area)	68	80	86	90
Impervious areas:				
Open water bodies: lakes, wetlands, ponds etc.	100	100	100	100
Paved parking lots, roofs[2], driveways, etc. (excluding right-of-way)	98	98	98	98
Permeable Pavement (See Appendix C to decide which condition below to use)				
Landscaped area	77	85	90	92
50% landscaped area/50% impervious	87	91	94	96
100% impervious area	98	98	98	98
Paved	98	98	98	98
Gravel (including right-of-way)	76	85	89	91
Dirt (including right-of-way)	72	82	87	89
Pasture, grassland, or range-continuous forage for grazing:				
Poor condition (ground cover <50% or heavily grazed with no mulch).	68	79	86	89
Fair condition (ground cover 50% to 75% and not heavily grazed).	49	69	79	84
Good condition (ground cover >75% and lightly or only occasionally grazed)	39	61	74	80
Woods:				
Poor (Forest litter, small trees, and brush are destroyed by heavy grazing or regular burning).	45	66	77	83
Fair (Woods are grazed but not burned, and some forest litter covers the soil).	36	60	73	79
Good (Woods are protected from grazing, and litter and brush adequately cover the soil).	30	55	70	77

Single family residential[3]**:** Dwelling Unit/Gross Acre	Should only be used for subdivisions > 50 acres	Average Percent impervious area[3,4]	
1.0 DU/GA		15	Separate curve number
1.5 DU/GA		20	shall be selected for
2.0 DU/GA		25	pervious & impervious
2.5 DU/GA		30	portions of the site or
3.0 DU/GA		34	basin
3.5 DU/GA		38	
4.0 DU/GA		42	
4.5 DU/GA		46	
5.0 DU/GA		48	
5.5 DU/GA		50	
6.0 DU/GA		52	
6.5 DU/GA		54	
7.0 DU/GA		56	
7.5 DU/GA		58	
PUD's, condos, apartments, commercial businesses, industrial areas & & subdivisions < 50 acres	%impervious must be computed	Separate curve numbers shall be selected for pervious and impervious portions of the site	

For a more detailed and complete description of land use curve numbers refer to chapter two (2) of the Soil Conservation Service's Technical Release No. 55 , (210-VI-TR-55, Second Ed., June 1986).

[1] Composite CN's may be computed for other combinations of open space cover type.

[2] Where roof runoff and driveway runoff are infiltrated or dispersed according to the requirements in Chapter 3, the average percent impervious area may be adjusted in accordance with the procedure described under "Flow Credit for Roof Downspout Infiltration" (Section 3.1.1), and "Flow Credit for Roof Downspout Dispersion" (Section 3.1.2).

[3] Assumes roof and driveway runoff is directed into street/storm system.

[4] All the remaining pervious area (lawn) are considered to be in good condition for these curve numbers.

SCS Curve Number Equations for determination of runoff depths and volumes

The rainfall-runoff equations of the SCS curve number method relates a land area's runoff depth (precipitation excess) to the precipitation it receives and to its natural storage capacity, as follows:

$$Q_d = (P - 0.2S)^2 / (P + 0.8S) \qquad \text{for } P \geq 0.2S$$

and

$$Q_d = 0 \qquad \text{for } P < 0.2S$$

Where:

Q_d = runoff depth in inches over the area,
P = precipitation depth in inches over the area, and
S = potential maximum natural detention, in inches over the area, due to infiltration, storage, etc.

The area's potential maximum detention, S, is related to its curve number, CN:

$$S = (1000 / CN) - 10$$

The combination of the above equations allows for estimation of the total runoff volume by computing total runoff depth, Q_d, given the total precipitation depth, P. For example, if the curve number of the area is 70, then the value of S is 4.29. With a total precipitation for the design event of 2.0 inches, the total runoff depth would be:

$$Q_d = [2.0 - 0.2\,(4.29)]^2 / [2.0 + 0.8\,(4.29)] = 0.24 \text{ inches}$$

This computed runoff represents inches over the tributary area. Therefore, the total volume of runoff is found by multiplying Q_d by the area (with necessary conversions):

Calculating the design volume for wetpool treatment facilities

Total runoff Volume (cu. ft.)	=	3,630 (cu. ft./ac. in.)	x	Q_d (in)	x	A (ac)

If the area is 10 acres, the total runoff volume is:

3,630 cu. ft./ac. in. x 0.24 in. x 10 ac. = 8,712 cu. ft.

This is the design volume for treatment BMPs for which the design criterion is based on the volume of runoff.

2.4 Closed Depression Analysis

The analysis of closed depressions requires careful assessment of the existing hydrologic performance in order to evaluate the impacts a proposed project will have. The applicable requirements (see Minimum Requirement #7) and the local government's Sensitive Areas Ordinance and Rules (if applicable) should be thoroughly reviewed prior to proceeding with the analysis.

Closed depressions generally facilitate infiltration of runoff. If a closed depression is classified as a wetland, then the Minimum Requirement #8 for wetlands applies. If there is an outflow from this wetland to a surface water (such as a creek), then the flow from this wetland must also meet the Minimum Requirement #7 for flow control. A calibrated continuous simulation hydrologic model must be used for closed depression analysis and design of mitigation facilities. If a closed depression is not classified as a wetland, model the ponding area at the bottom of the closed depression as an infiltration pond using WWHM or an approved equivalent runoff model.”.

Chapter 3 - Flow Control Design

Note: Figures in Chapter 3 courtesy of King County, except as noted

This chapter presents methods, criteria, and details for hydraulic analysis and design of flow control facilities and roof downspout controls. *Flow control facilities* are detention or infiltration facilities engineered to meet the flow control standards specified in Volume I. *Roof downspout controls* are infiltration or dispersion systems for use in individual lots, proposed plats, and short plats. Roof downspout controls are used in conjunction with, and in addition to, any flow control facilities that may be necessary. Implementation of roof downspout controls may reduce the total effective impervious area and result in less runoff from these surfaces. Ecology's Western Washington Hydrology Model (WWHM) incorporates flow credits for implementing two types of roof downspout controls. These are:

- If roof runoff is ***infiltrated*** according to the requirements of this section, the roof area may be discounted from the total project area used for sizing stormwater facilities. This is done by clicking on the "Credit" button in the WWHM and entering the percent of roof area that is being infiltrated.
- If roof runoff is ***dispersed*** according to the requirements of this section on single-family lots greater than 22,000 square feet, and the *vegetative flow*[*] path is 50 feet or larger through undisturbed native landscape or lawn/landscape area that meets BMP T5.13, the roof area may be modeled as grassed surface. This is done by clicking on the "Credits" button in the WWHM and entering the percent of roof area that is being dispersed.

This chapter also provides a description of the use of infiltration facilities for flow control. Additional design considerations and general limitations of the infiltration facilities and small site BMPs are covered in Volume V.

Roof downspout controls and small site BMPs should be applied to individual commercial lot developments when the percent impervious area and pollutant characteristics are comparable to those from residential lots.

[*] *Vegetative flow* path is measured from the downspout or dispersion system discharge point to the downstream property line, stream, wetland, or other impervious surface.

3.1 Roof Downspout Controls

This section presents the criteria for design and implementation of roof downspout controls. *Roof downspout controls* are simple pre-engineered designs for infiltrating and/or dispersing runoff from roof areas for the purposes of increasing opportunities for groundwater recharge and reduction of runoff volumes from new developments.

Selection of Roof Downspout Controls

Large lots in rural areas (5 acres or greater) typically have enough area to disperse or infiltrate roof runoff. Lots created in urban areas will typically be smaller (about 8,000 square feet) and have a limited amount of area in which to site infiltration or dispersion trenches. Downspout infiltration should be used in those soils that readily infiltrate (coarse sands and cobbles to medium sands). Dispersion BMPs should be used for urban lots located in less permeable soils, where if infiltration is not feasible. Where dispersion is not feasible because of very small lot size, or where there is a potential for creating drainage problems on adjacent lots, downspouts should be connected to the street storm drain system, which directs the runoff to a stormwater management facility.

Where roof downspout controls are planned, the following three types must be considered in descending order of preference:

- Downspout infiltration systems (Section 3.1.1)
- Downspout dispersion systems (Section 3.1.2)
- Downspout perforated stub-out connections (Section 3.1.3)

Figure 3.1 illustrates, in general, how roof downspout controls are selected and applied in single-family subdivision projects. However, local jurisdictions may adopt approaches that are more specific to their locality. Where supported by appropriate soil infiltration tests, downspout infiltration in finer soils may be practical using a larger infiltration system.

Note: Other innovative downspout control BMPs such as rain barrels, ornamental ponds, downspout cisterns, or other downspout water storage devices may also be used if approved by the reviewing authority.

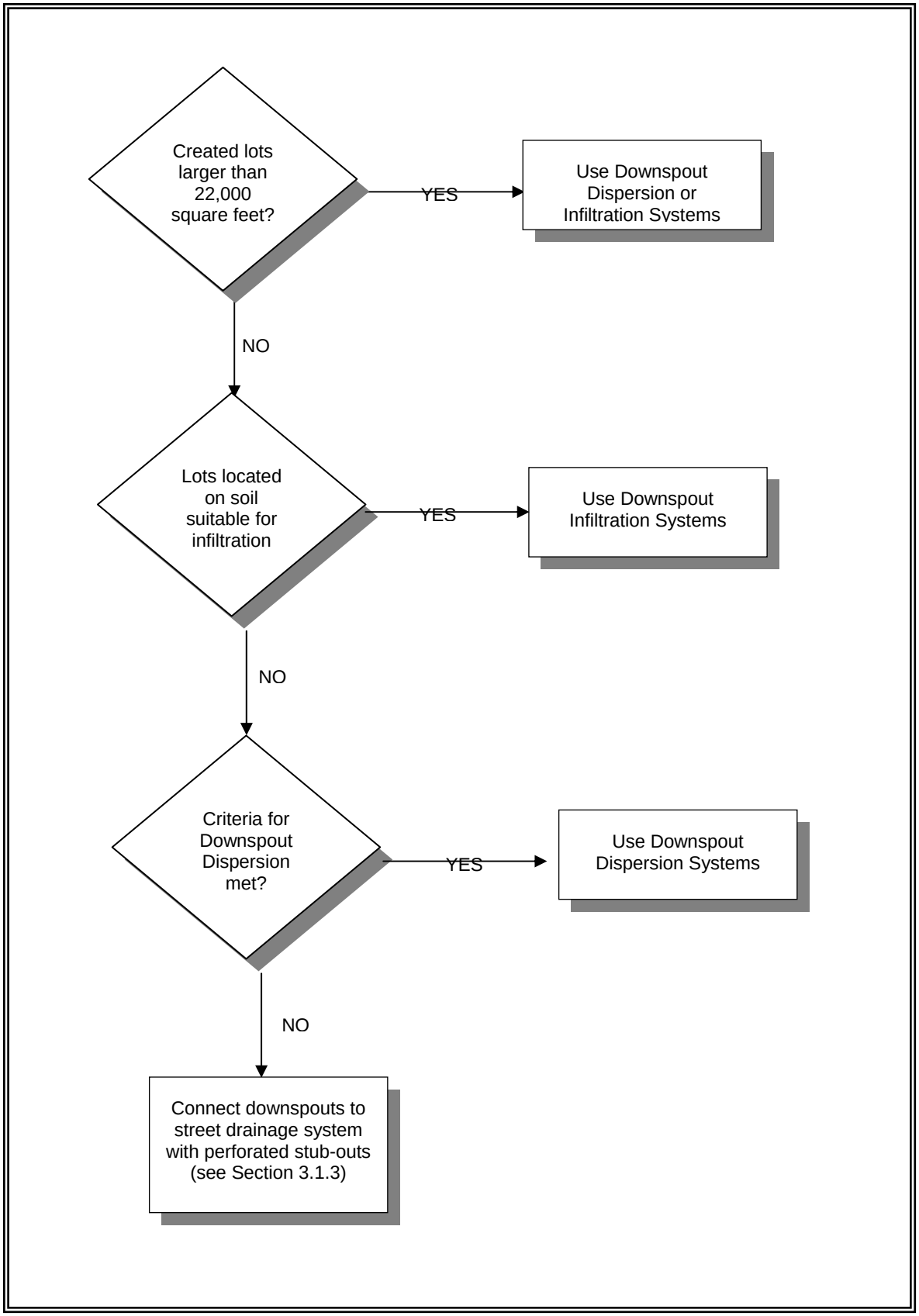

Figure 3.1 – Flow Diagram Showing Selection of Roof Downspout Controls

3.1.1 Downspout Infiltration Systems

Downspout infiltration systems are trench or drywell designs intended only for use in infiltrating runoff from roof downspout drains. They are not designed to directly infiltrate runoff from pollutant-generating impervious surfaces.

Application

The following apply to parcels as described in Volume I:

1. Single family subdivision projects subject to Minimum Requirement #7 for flow control (Volume I) must provide for individual downspout infiltration systems on all lots smaller than 22,000 square feet if feasible. Local governments may specify a different lot size that is more appropriate - based on local soil and slope conditions and rainfall. Concentrated flows may not be directed to adjoining lots. They must be dispersed and retained on the building lot to the maximum extent possible.
2. The feasibility or applicability of downspout infiltration must be evaluated for all subdivision single-family lots smaller than 22,000 square feet. The evaluation procedure detailed below must be used to determine if downspout infiltration is feasible or whether downspout dispersion can be used in lieu of infiltration.
3. For subdivision single-family lots greater than or equal to 22,000 square feet, downspout infiltration is optional, and the evaluation procedure detailed below may be used if downspout infiltration is being proposed voluntarily.
4. If site-specific tests indicate less than 3 feet of permeable soil from the proposed final grade to the seasonal high groundwater table, then a downspout dispersion system per Section 3.1.2 may be used in lieu of infiltration.
5. On lots or sites with more than 3 feet of permeable soil from the proposed final grade to the seasonal high groundwater table, downspout infiltration is considered feasible if the soils are outwash type soils and the infiltration trench can be designed to meet the minimum design criteria specified below.

Note: If downspout infiltration is not provided on these lots, then a downspout dispersion system must be provided per Section 3.1.2.

Flow Credit for Roof Downspout Infiltration

If roof runoff is infiltrated according to the requirements of this section, the roof area may be discounted from the project area used for sizing stormwater facilities. This is done by clicking on the “Credit” button in WWHM and entering the percent of roof area that is being infiltrated.

Procedure for Evaluating Feasibility

1. A soils report must be prepared by a professional soil scientist certified by the Soil Science Society of America (or an equivalent national program), a locally licensed onsite sewage designer, or by other suitably trained persons working under the supervision of a professional engineer, geologist, hydrogeologist, or engineering geologist registered in the State of Washington to determine if soils suitable for infiltration are present on the site. The report must reference a sufficient number of soils logs to establish the type and limits of soils on the project site. The report should at a minimum identify the limits of any *outwash type soils* (i.e., those meeting USDA soil texture classes ranging from coarse sand and cobbles to medium sand) versus other soil types and include an inventory of topsoil depth.
2. On lots or sites with no outwash type soils, a downspout dispersion system per Section 3.1.2 may be used in lieu of infiltration.
3. On lots or sites containing outwash type soils (coarse sand and cobbles to medium sand), additional site-specific testing must be done. Individual lot or site tests must consist of at least one soils log at the location of the infiltration system, a minimum of 4 feet in depth (from proposed grade), identifying the SCS series of the soil and the USDA textural class of the soil horizon through the depth of the log, and noting any evidence of high groundwater level, such as mottling.

   Note: This testing must also be carried out on lots or sites where downspout infiltration is being proposed in soils other than outwash.
4. If site-specific tests indicate less than 3 feet of permeable soil from the proposed final grade to the seasonal high groundwater table, then a downspout dispersion system per Section 3.1.2 may be used in lieu of infiltration.
5. On lots or sites with more than 3 feet of permeable soil from the proposed final grade to the seasonal high groundwater table, downspout infiltration is considered feasible if the soils are outwash type soils and the infiltration trench can be designed to meet the minimum design criteria specified below.

Design Criteria for Infiltration Trenches

Figure 3.2 shows a typical downspout infiltration trench system, and Figure 3.3 presents an alternative infiltration trench system for sites with coarse sand and cobble soils. These systems are designed as specified below.

General

1. The following minimum lengths (linear feet) per 1,000 square feet of roof area based on soil type may be used for sizing downspout infiltration trenches.

Coarse sands and cobbles	20 LF
Medium sand	30 LF

Fine sand, loamy sand	75 LF
Sandy loam	125 LF
Loam	190 LF

2. Maximum length of trench must not exceed 100 feet from the inlet sump.
3. Minimum spacing between trench centerlines must be 6 feet.
4. Filter fabric must be placed over the drain rock as shown on Figure 3.2 prior to backfilling.
5. Infiltration trenches may be placed in fill material if the fill is placed and compacted under the direct supervision of a geotechnical engineer or professional civil engineer with geotechnical expertise, and if the measured infiltration rate is at least 8 inches per hour. Trench length in fill must be 60 linear feet per 1,000 square feet of roof area. Infiltration rates can be tested using the methods described in Section 3.3.
6. Infiltration trenches should not be built on slopes steeper than 25 percent (4:1). A geotechnical analysis and report may be required on slopes over 15 percent or if located within 200 feet of the top of steep slope or landslide hazard area.
7. Trenches may be located under pavement if a small yard drain or catch basin with grate cover is placed at the end of the trench pipe such that overflow would occur out of the catch basin at an elevation at least one foot below that of the pavement, and in a location which can accommodate the overflow without creating a significant adverse impact to downhill properties or drainage systems. This is intended to prevent saturation of the pavement in the event of system failure.

Design Criteria for Infiltration Drywells

Figure 3.4 shows a typical downspout infiltration drywell system. These systems are designed as specified below.

General

1. Drywell bottoms must be a minimum of 1 foot above seasonal high groundwater level or impermeable soil layers.
2. If using drywells, each drywell may serve up to 1000 square feet of impervious surface for either medium sands or coarse sands.
3. Typically drywells are 48 inches in diameter (minimum) and have a depth of 5 feet (4 feet of gravel and 1 foot of suitable cover material).
4. Filter fabric (geotextile) must be placed on top of the drain rock and on trench or drywell sides prior to backfilling.
5. Spacing between drywells must be a minimum of 4 feet.
6. Downspout infiltration drywells must not be built on slopes greater than 25% (4:1). Drywells may not be placed on or above a landslide

hazard area or slopes greater than 15% without evaluation by a professional engineer with geotechnical expertise or a licensed geologist, hydrogeologist, or engineering geologist, and with jurisdiction approval.

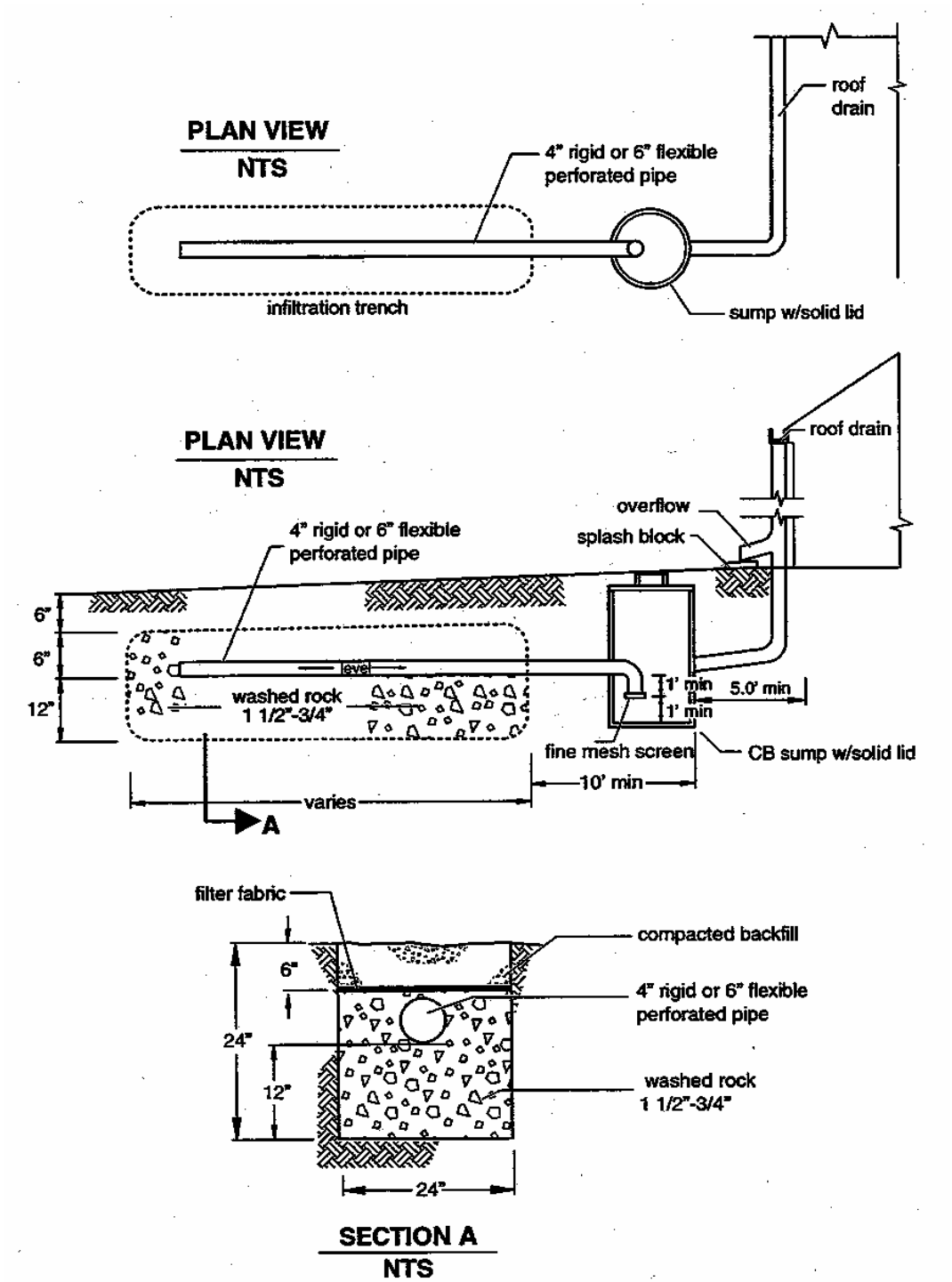

Figure 3.2 Typical Downspout Infiltration Trench

Source: King County

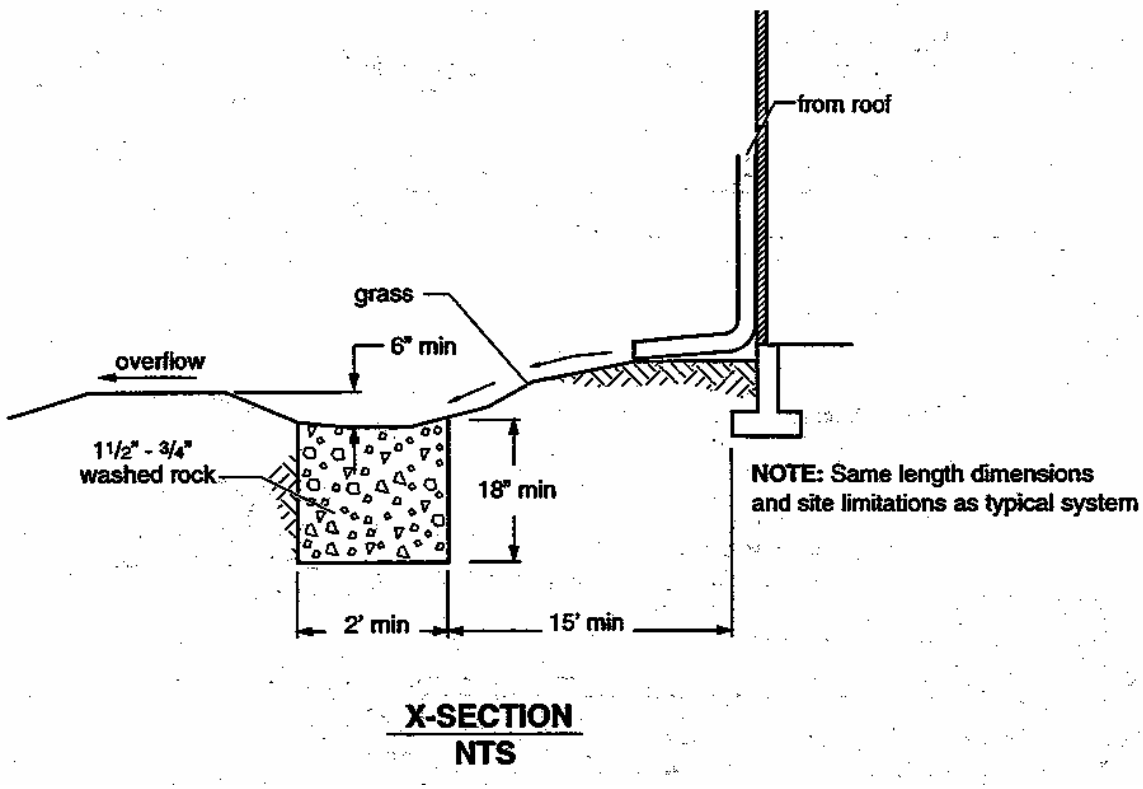

Figure 3.3 Alternative Downspout Infiltration Trench System for Coarse Sand and Gravel

Source: King County

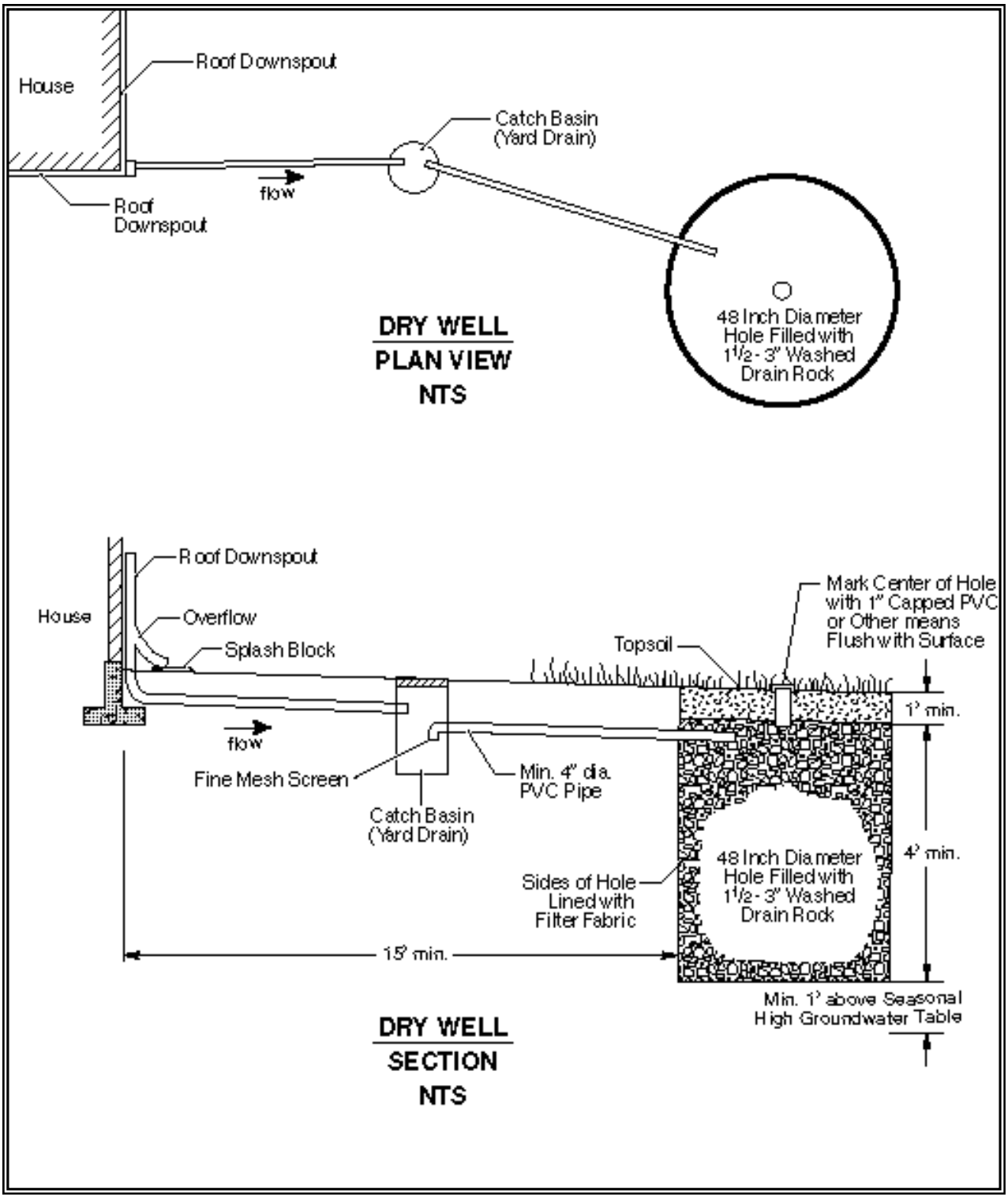

Figure 3.4 – Typical Downspout Infiltration Drywell

Source: King County

Setbacks

Local governments may require specific setbacks in sites with steep slopes, land slide areas, open water features, springs, wells, and septic tank drain fields. Adequate room for maintenance access and equipment should also be considered. Examples of setbacks commonly used include the following:

1. All infiltration systems should be at least 10 feet from any structure, property line, or sensitive area (except steep slopes).
2. All infiltration systems must be at least 50 feet from the top of any sensitive area steep slope. This setback may be reduced to 15 feet based on a geotechnical evaluation, but in no instances may it be less than the buffer width.
3. For sites with septic systems, infiltration systems must be downgradient of the drainfield unless the site topography clearly prohibits subsurface flows from intersecting the drainfield.

3.1.2 Downspout Dispersion Systems

Downspout dispersion systems are splash blocks or gravel-filled trenches, which serve to spread roof runoff over vegetated pervious areas. Dispersion attenuates peak flows by slowing entry of the runoff into the conveyance system, allows for some infiltration, and provides some water quality benefits.

Application

Downspout dispersion must be used in all subdivision single-family lots, which meet one of the following criteria:

1. Lots greater than or equal to 22,000 square feet where downspout infiltration is not being provided according to the requirements in Section 3.1.1.
2. Lots smaller than 22,000 square feet where soils are not suitable for downspout infiltration (as determined in Section 3.1.1) and where the design criteria below can be met.

Flow Credit for Roof Downspout Dispersion

If roof runoff is dispersed according to the requirements of this section on single-family lots greater than 22,000 square feet, and the *vegetative flow*[*] path is 50 feet or larger through undisturbed native landscape or lawn/landscape area that meets BMP T5.13, the roof area may be modeled as grassed surface. This is done by clicking on the "Credits" button in the WWHM and entering the percent of roof area that is being dispersed.

Design Criteria

1. Downspout trenches designed as shown in Figure 3.5 should be used for all downspout dispersion applications except where splash blocks are allowed below.
2. Splash blocks shown in Figure 3.7 may be used for downspouts discharging to a *vegetated flowpath* at least 50 feet in length as measured from the downspout to the downstream property line, structure, steep slope, stream, wetland, or other impervious surface. Sensitive area buffers may count toward flowpath lengths.
3. If the vegetated flowpath (measured as defined above) is less than 25 feet on a subdivision single family lot, a perforated stub-out connection per Section 3.1.3 may be used in lieu of downspout dispersion. A perforated stub-out may also be used where implementation of downspout dispersion might cause erosion or flooding problems, either on site or on adjacent lots. This provision might be appropriate, for example, for lots constructed on steep hills where downspout discharge could be cumulative and might pose a potential hazard for lower lying lots, or where dispersed flows could create problems for adjacent offsite

[*] *Vegetative flow* path is measured from the downspout or dispersion system discharge point to the downstream property line, stream, wetland, or other impervious surface.

lots. Perforated stub-outs are not appropriate when seasonal water table is <1 foot below trench bottom.

4. For sites with septic systems, the discharge point of all dispersion systems must be downgradient of the drainfield. This requirement may be waived if site topography clearly prohibits flows from intersecting the drainfield.

Design Criteria for Dispersion Trenches

1. A vegetated flowpath of at least 25 feet in length must be maintained between the outlet of the trench and any property line, structure, stream, wetland, or impervious surface. A vegetated flowpath of at least 50 feet in length must be maintained between the outlet of the trench and any steep slope. Sensitive area buffers may count towards flowpath lengths.

2. Trenches serving up to 700 square feet of roof area may be simple 10-foot-long by 2-foot wide gravel filled trenches as shown in Figure 3.5. For roof areas larger than 700 square feet, a dispersion trench with notched grade board as shown in Figure 3.6 may be used as approved by the local jurisdiction. The total length of this design must not exceed 50 feet and must provide at least 10 feet of trench per 700 square feet of roof area.

3. A setback of at least 5 feet should be maintained between any edge of the trench and any structure or property line.

4. No erosion or flooding of downstream properties may result.

5. Runoff discharged towards landslide hazard areas must be evaluated by a geotechnical engineer or a licensed geologist, hydrogeologist, or engineering geologist. The discharge point may not be placed on or above slopes greater than 20% or above erosion hazard areas without evaluation by a geotechnical engineer or qualified geologist and jurisdiction approval.

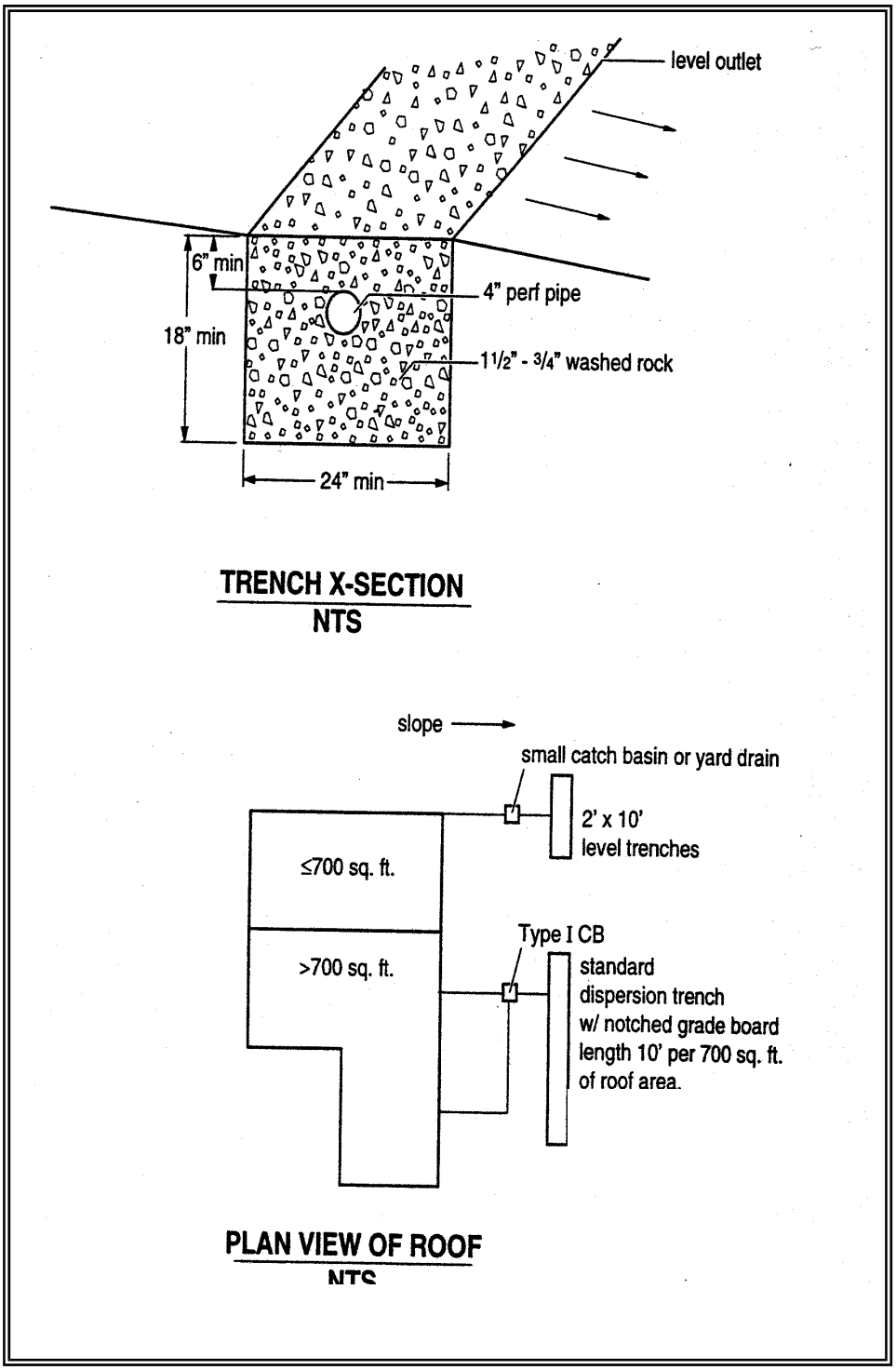

Figure 3.5 Typical Downspout Dispersion Trench

Source: King County

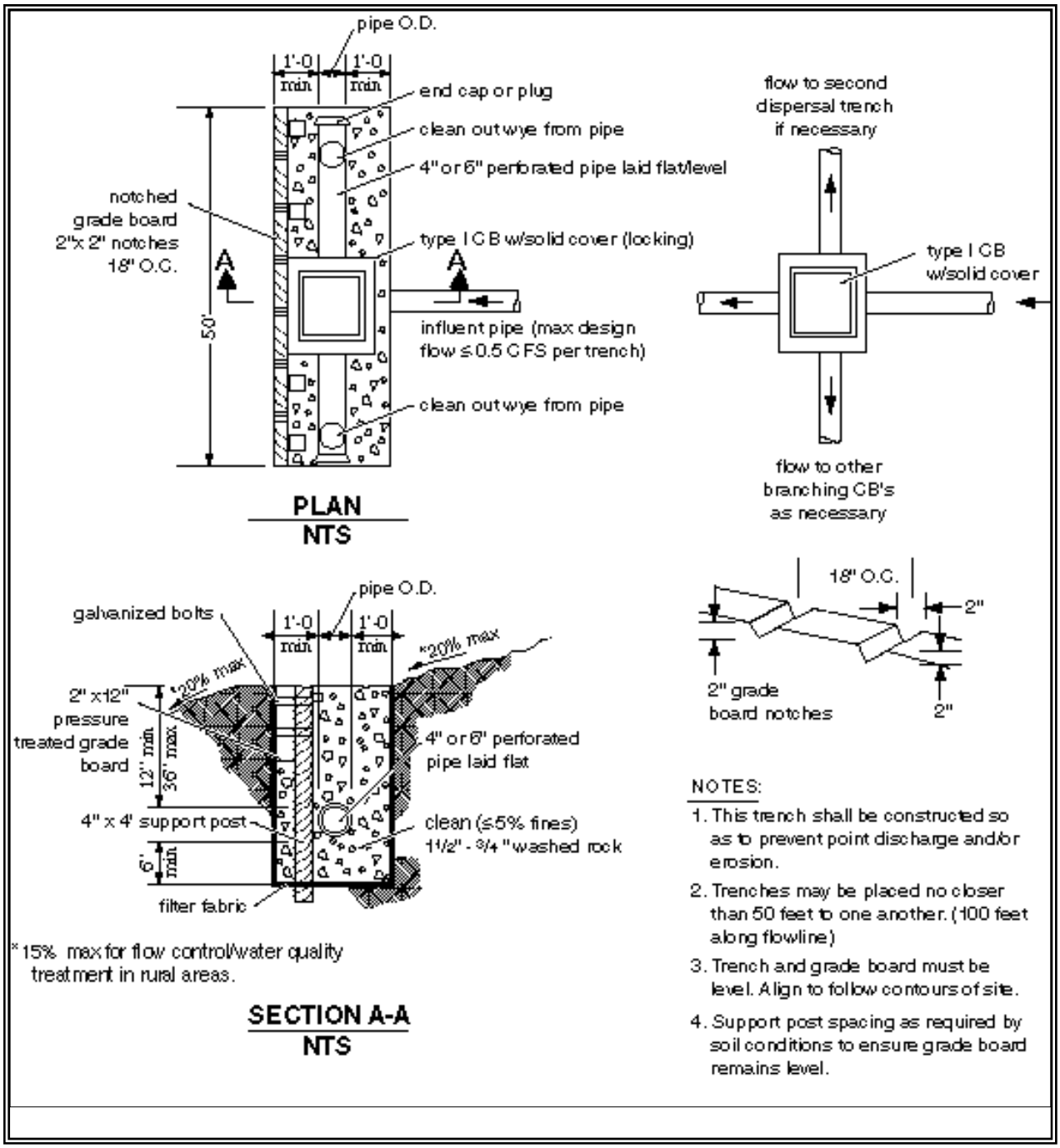

Figure 3.6 Standard Dispersion Trench with Notched Grade Board

Design Criteria for Splashblocks

A typical downspout splashblock is shown in Figure 3.7. In general, if the ground is sloped away from the foundation and there is adequate vegetation and area for effective dispersion, splashblocks will adequately disperse storm runoff. If the ground is fairly level, if the structure includes a basement, or if foundation drains are proposed, splashblocks with downspout extensions may be a better choice because the discharge point is moved away from the foundation. Downspout extensions can include piping to a splashblock/discharge point a considerable distance from the downspout, as long as the runoff can travel through a well-vegetated area as described below.

The following apply to the use of splashblocks:

1. A vegetated flowpath of at least 50 feet should be maintained between the discharge point and any property line, structure, steep slope, stream, wetland, lake, or other impervious surface. Sensitive area buffers may count toward flowpath lengths.
2. A maximum of 700 square feet of roof area may drain to each splashblock.
3. A splashblock or a pad of crushed rock (2 feet wide by 3 feet long by 6 inches deep) should be placed at each downspout discharge point.
4. No erosion or flooding of downstream properties may result.
5. Runoff discharged towards landslide hazard areas must be evaluated by a professional engineer with geotechnical expertise or a qualified geologist. Splashblocks may not be placed on or above slopes greater than 20% or above erosion hazard areas without evaluation by a professional engineer with geotechnical expertise or a licensed geologist, hydrogeologist, or engineering geologist, and jurisdiction approval.
6. For sites with septic systems, the discharge point must be downslope of the primary and reserve drainfield areas. This requirement may be waived if site topography clearly prohibits flows from intersecting the drainfield or where site conditions (soil permeability, distance between systems, etc) indicate that this is unnecessary.

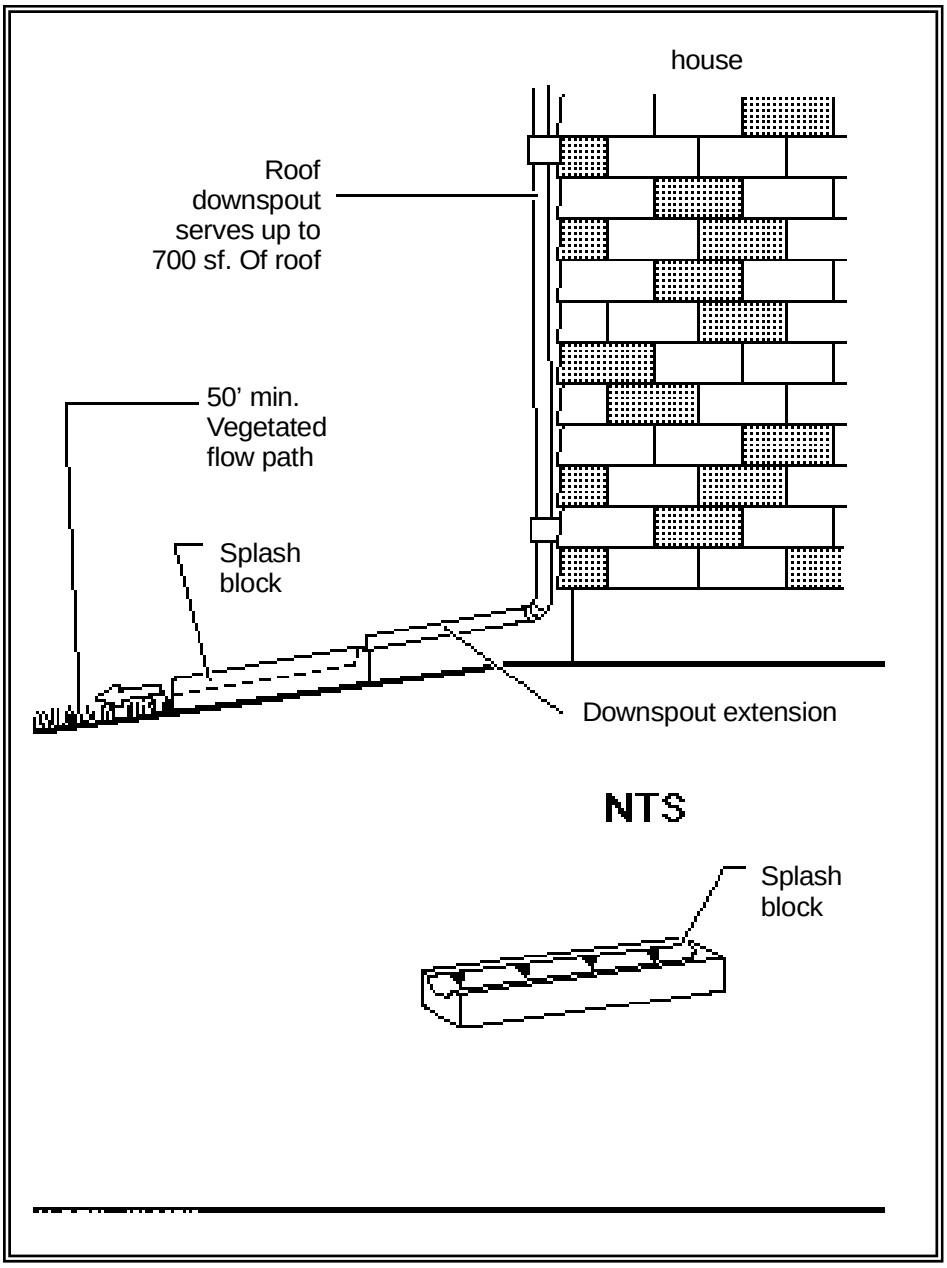

Figure 3.7 Typical Downspout Splashblock Dispersion

3.1.3 Perforated Stub-Out Connections

A perforated stub-out connection is a length of perforated pipe within a gravel-filled trench that is placed between roof downspouts and a stub-out to the local drainage system. Figure 3.8 illustrates a perforated stub-out connection. These systems are intended to provide some infiltration during drier months. During the wet winter months, they may provide little or no flow control. Perforated stub-outs are not appropriate when seasonal water table is < 1 foot below trench bottom.

In single-family subdivision projects subject to Minimum Requirement #7 for flow control (see Volume I), perforated stub-out connections may be used only when downspout infiltration or dispersion is not feasible per the criteria in Sections 3.1.1 and 3.1.2.

Location of the connection should be selected to allow a maximum amount of runoff to infiltrate into the ground (ideally a dry location on the site that is relatively well drained). To facilitate maintenance, the perforated pipe portion of the system should not be located under impervious or heavily compacted (e.g., driveways and parking areas) surfaces.

Perforated stub-out connections should consist of at least 10 feet of perforated pipe per 5,000 square feet of roof area laid in a level, 2-foot wide trench backfilled with washed drain rock. The drain rock should extend to a depth of at least 8 inches below the bottom of the pipe and should cover the pipe. The pipe should be laid level and the rock trench covered with filter fabric and 6 inches of fill (see Figure 3.8).

Setbacks are the same as for infiltration trenches.

Potential runoff discharge towards a landslide hazard area must be evaluated by a professional engineer with geotechnical expertise or a licensed geologist, hydrogeologist, or engineering geologist**.** The perforated portion of the pipe may not be placed on or above slopes greater than 20% or above erosion hazard areas without evaluation by a professional engineer with geotechnical expertise or qualified geologist and jurisdiction approval.

For sites with septic systems, the perforated portion of the pipe must be downgradient of the drainfield primary and reserve areas. This requirement can be waived if site topography will clearly prohibit flows from intersecting the drainfield or where site conditions (soil permeability, distance between systems, etc) indicate that this is unnecessary.

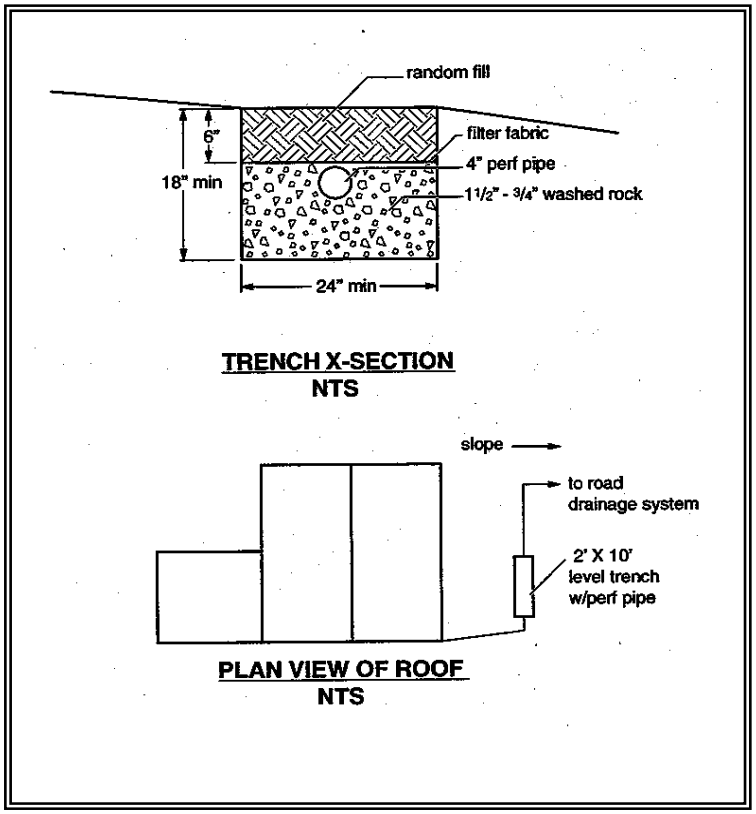

Source: King County

Figure 3.8 Perforated Stub-Out Connection

3.2 Detention Facilities

This section presents the methods, criteria, and details for design and analysis of detention facilities. These facilities provide for the temporary storage of increased surface water runoff resulting from development pursuant to the performance standards set forth in Minimum Requirement #7 for flow control (Volume I).

There are three primary types of detention facilities described in this section: detention ponds, tanks, and vaults.

3.2.1 Detention Ponds

The design criteria in this section are for detention ponds. However, many of the criteria also apply to infiltration ponds (Section 3.3 and Volume V), and water quality wetponds and combined detention/wetponds (Volume V).

Dam Safety for Detention BMPs

Stormwater detention facilities that can impound 10 acre-feet (435,600 cubic feet; 3.26 million gallons) or more with the water level at the embankment crest are subject to the state's dam safety requirements, even if water storage is intermittent and infrequent (WAC 173-175-020(1)). The principal safety concern is for the downstream population at risk if the dam should breach and allow an uncontrolled release of the pond contents. Peak flows from dam failures are typically much larger than the 100-year flows which these ponds are typically designed to accommodate.

The Dam Safety Office of the Department of Ecology uses consequence dependent design levels for critical project elements. There are eight design levels with storm recurrence intervals ranging from 1 in 500 for design step, 1 to 1 in 1,000,000 for design step 8. The specific design step for a particular project depends on the downstream population and other resources that would be at risk from a failure of the dam. Precipitation events more extreme than the 100-year event may be rare at any one location, but have historically occurred somewhere within Washington State every few years on average.

With regard to the engineering design of stormwater detention facilities, the primary effect of the state's dam safety requirements is in sizing the emergency spillway to accommodate the runoff from the dam safety design storm without overtopping the dam. The hydrologic computation procedures are the same as for the original pond design, except that the computations must use more extreme precipitation values and the appropriate dam safety design storm hyetographs. This information is described in detail within guidance documents developed by and available from the Dam Safety Office. In addition to the other design requirements for stormwater detention BMPs described elsewhere in this manual, dam

safety requirements should be an integral part of planning and design for stormwater detention ponds. It is most cost-effective to consider these requirements right from the beginning of the project.

In addition to the hydrologic and hydraulic issues related to precipitation and runoff, other dam safety requirements include geotechnical issues, construction inspection and documentation, dam breach analysis, inundation mapping, emergency action planning, and periodic inspections by project owners and by Dam Safety engineers. All of these requirements, plus procedural requirements for plan review and approval and payment of construction permit fees are described in detail in guidance documents developed by and available from the Dam Safety Office.

In addition to the written guidance documents, Dam Safety engineers are available to provide technical assistance to project owners and design engineers in understanding and addressing the dam safety requirements for their specific project. In the interest of providing a smooth integration of dam safety requirements into the stormwater detention project and streamlining Dam Safety's engineering review and issuance of the construction permit, it is recommended and requested that Dam Safety be contacted early in the facilities planning process. The Dam Safety Office is located in the Ecology headquarters building in Lacey. Electronic versions of the guidance documents in PDF format are available on the Department of Ecology Web site at http://www.ecy.wa.gov/programs/wr/dams/dss.html.

Design Criteria

Standard details for detention ponds are shown in Figure 3.9 through Figure 3.11. Control structure details are provided in Section 3.2.4.

General

1. Ponds must be designed as flow-through systems (however, parking lot storage may be utilized through a back-up system; see Section 3.2.5). Developed flows must enter through a conveyance system separate from the control structure and outflow conveyance system. Maximizing distance between the inlet and outlet is encouraged to promote sedimentation.
2. Pond bottoms should be level and be located a minimum of 0.5 foot (preferably 1 foot) below the inlet and outlet to provide sediment storage.
3. Design guidelines for outflow control structures are specified in Section 3.2.4.
4. A geotechnical analysis and report must be prepared for steep slopes (i.e., slopes over 15%), or if located within 200 feet of the top of a steep slope or landslide hazard area. The scope of the geotechnical report

should include the assessment of impoundment seepage on the stability of the natural slope where the facility will be located within the setback limits set forth in this section.

Side Slopes

1. Interior side slopes up to the emergency overflow water surface should not be steeper than 3H:1V unless a fence is provided (see “Fencing”).
2. Exterior side slopes must not be steeper than 2H:1V unless analyzed for stability by a geotechnical engineer.
3. Pond walls may be vertical retaining walls, provided: (a) they are constructed of reinforced concrete per Section 3.2.3, Material; (b) a fence is provided along the top of the wall; (c) the entire pond perimeter may be retaining walls, however, it is recommended that at least 25 percent of the pond perimeter be a vegetated soil slope not steeper than 3H:1V; and (d) the design is stamped by a licensed civil engineer with structural expertise. Other retaining walls such as rockeries, concrete, masonry unit walls, and keystone type wall may be used if designed by a geotechnical engineer or a civil engineer with structural expertise. If the entire pond perimeter is to be retaining walls, ladders should be provided on the walls for safety reasons.

Embankments

1. Pond berm embankments higher than 6 feet must be designed by a professional engineer with geotechnical expertise.
2. For berm embankments 6 feet or less, the minimum top width should be 6 feet or as recommended by a geotechnical engineer.
3. Pond berm embankments must be constructed on native consolidated soil (or adequately compacted and stable fill soils analyzed by a geotechnical engineer) free of loose surface soil materials, roots, and other organic debris.
4. Pond berm embankments greater than 4 feet in height must be constructed by excavating a key equal to 50 percent of the berm embankment cross-sectional height and width unless specified otherwise by a geotechnical engineer.
5. Embankment compaction should be accomplished in such a manner as to produce a dense, low permeability engineered fill that can tolerate post-construction settlements with a minimum of cracking. The embankment fill should be placed on a stable subgrade and compacted to a minimum of 95% of the Standard Proctor Maximum Density, ASTM Procedure D698. Placement moisture content should lie within 1% dry to 3% wet of the optimum moisture content. The referenced compaction standard may have to be increased to comply with local regulations.

The berm embankment should be constructed of soils with the following characteristics per the United States Department of Agriculture's Textural Triangle: a minimum of 20% silt and clay, a maximum of 60% sand, a maximum of 60% silt, with nominal gravel and cobble content. Soils outside this specified range can be used, provided the design satisfactorily addresses the engineering concerns posed by these soils. The paramount concerns with these soils are their susceptibility to internal erosion or piping and to surface erosion from wave action and runoff on the upstream and downstream slopes, respectively. *Note: In general, excavated glacial till is well suited for berm embankment material*.

6. Anti-seepage filter-drain diaphragms must be placed on outflow pipes in berm embankments impounding water with depths greater than 8 feet at the design water surface. See Dam Safety Guidelines, Part IV, Section 3.3.B on pages 3-27 to 3-30. An electronic version of the Dam Safety Guidelines is available in PDF format at www.ecy.wa.gov/programs/wr/dams/dss.html.

Overflow

1. In all ponds, tanks, and vaults, a primary overflow (usually a riser pipe within the control structure; see Section 3.2.4) must be provided to bypass the 100-year developed peak flow over or around the restrictor system. This assumes the facility will be full due to plugged orifices or high inflows; the primary overflow is intended to protect against breaching of a pond embankment (or overflows of the upstream conveyance system in the case of a detention tank or vault). The design must provide controlled discharge directly into the downstream conveyance system or another acceptable discharge point.
2. A secondary inlet to the control structure must be provided in ponds as additional protection against overtopping should the inlet pipe to the control structure become plugged. A grated opening ("jailhouse window") in the control structure manhole functions as a weir (see Figure 3.10) when used as a secondary inlet.
   Note: The maximum circumferential length of this opening must not exceed one-half the control structure circumference. The "birdcage" overflow structure as shown in Figure 3.11 may also be used as a secondary inlet.

Emergency Overflow Spillway

1. In addition to the above overflow provisions, ponds must have an emergency overflow spillway. For impoundments of 10 acre-feet or greater, the emergency overflow spillway must meet the state's dam safety requirements (see above). For impoundments under 10 acre-feet, ponds must have an emergency overflow spillway that is sized to pass the 100-year developed peak flow in the event of total control structure

failure (e.g., blockage of the control structure outlet pipe) or extreme inflows. Emergency overflow spillways are intended to control the location of pond overtopping and direct overflows back into the downstream conveyance system or other acceptable discharge point.

2. Emergency overflow spillways must be provided for ponds with constructed berms over 2 feet in height, or for ponds located on grades in excess of 5 percent. As an option for ponds with berms less than 2 feet in height and located at grades less than 5 percent, emergency overflow may be provided by an emergency overflow structure, such as a Type II manhole fitted with a birdcage as shown in Figure 3.11. The emergency overflow structure must be designed to pass the 100-year developed peak flow, with a minimum 6 inches of freeboard, directly to the downstream conveyance system or another acceptable discharge point. Where an emergency overflow spillway would discharge to a steep slope, consideration should be given to providing an emergency overflow structure *in addition to* the spillway.

3. The emergency overflow spillway must be armored with riprap in conformance with the "Outlet Protection" BMP in Volume II. The spillway must be armored full width, beginning at a point midway across the berm embankment and extending downstream to where emergency overflows re-enter the conveyance system (see Figure 3.10).

4. Emergency overflow spillway designs must be analyzed as broad-crested trapezoidal weirs as described in Methods of Analysis at the end of this section (Section 3.2.1). Either one of the weir sections shown in Figure 3.10 may be used.

Access

The following guidelines for access may be used.

1. Maintenance access road(s) should be provided to the control structure and other drainage structures associated with the pond (e.g., inlet or bypass structures). It is recommended that manhole and catch basin lids be in or at the edge of the access road and at least three feet from a property line.

2. An access ramp is needed for removal of sediment with a trackhoe and truck. The ramp must extend to the pond bottom if the pond bottom is greater than 1,500 square feet (measured without the ramp) and it may end at an elevation 4 feet above the pond bottom, if the pond bottom is less than 1,500 square feet (measured without the ramp).

   On large, deep ponds, truck access to the pond bottom via an access ramp is necessary so loading can be done in the pond bottom. On small deep ponds, the truck can remain on the ramp for loading. On small

shallow ponds, a ramp to the bottom may not be required if the trackhoe can load a truck parked at the pond edge or on the internal berm of a wetpond or combined pond (trackhoes can negotiate interior pond side slopes).

3. The internal berm of a wetpond or combined detention and wetpond may be used for access if it is no more than 4 feet above the first wetpool cell, if the first wetpool cell is less than 1,500 square feet (measured without the ramp), and if it is designed to support a loaded truck, considering the berm is normally submerged and saturated.
4. Access ramps must meet the requirements for design and construction of access roads specified below.
5. If a fence is required, access should be limited by a double-posted gate or by bollards – that is, two fixed bollards on each side of the access road and two removable bollards equally located between the fixed bollards.

Design of Access Roads

The design guidelines for access road are given below.

1. Maximum grade should be 15 percent.
2. Outside turning radius should be a minimum of 40 feet.
3. Fence gates should be located only on straight sections of road.
4. Access roads should be 15 feet in width on curves and 12 feet on straight sections.
5. A paved apron must be provided where access roads connect to paved public roadways.

Construction of Access Roads

Access roads may be constructed with an asphalt or gravel surface, or modular grid pavement. All surfaces must conform to the jurisdictional standards and manufacturer's specifications.

Fencing

1. A fence is needed at the emergency overflow water surface elevation, or higher, where a pond interior side slope is steeper than 3H:1V, or where the impoundment is a wall greater than 24 inches in height. The fence need only be constructed for those slopes steeper than 3H:1V. Note, however, that other regulations such as the Uniform Building Code may require fencing of vertical walls. If more than 10 percent of slopes are steeper 3H:1V, it is recommended that the entire pond be fenced.

Also note that detention ponds on school sites will need to comply with safety standards developed by the Department of Health (DOH) and the Superintendent for Public Instruction (SPI). These standards include what is called a 'non-climbable fence.' One example of a non-climbable fence is a chain-link fence with a tighter mesh, so children cannot get a foot-hold for climbing. For school sites, and possibly for parks and playgrounds, the designer should consult the DOH's Office of Environmental Programs.

A fence is needed to discourage access to portions of a pond where steep side slopes (steeper than 3:1) increase the potential for slipping into the pond. Fences also serve to guide those who have fallen into a pond to side slopes that are flat enough (flatter than 3:1 and unfenced) to allow for easy escape.

2. It is recommended that fences be 6 feet in height. For example designs, see WSDOT Standard Plan L-2, Type 1 or Type 3 chain link fence. The fence may be a minimum of 4 feet in height if the depth of the impoundment (measured from the lowest elevation in the bottom of the impoundment, directly adjacent to the bottom of the fenced slope, up to the emergency overflow water surface) is 5 feet or less. For example designs, see WSDOT Standard Plan L-2, Type 4 or Type 6 chain link fence.
3. Access road gates may be 16 feet in width consisting of two swinging sections 8 feet in width. Additional vehicular access gates may be needed to facilitate maintenance access.
4. Pedestrian access gates (if needed) should be 4 feet in width.
5. Vertical metal balusters or 9 gauge galvanized steel fabric with bonded vinyl coating can be used as fence material. For steel fabric fences, the following aesthetic features may be considered:
   a) Vinyl coating that is compatible with the surrounding environment (e.g., green in open, grassy areas and black or brown in wooded areas). All posts, cross bars, and gates may be painted or coated the same color as the vinyl clad fence fabric.
   b) Fence posts and rails that conform to WSDOT Standard Plan L-2 for Types 1, 3, or 4 chain link fence.
6. For metal baluster fences, Uniform Building Code standards apply.
7. Wood fences may be used in subdivisions where the fence will be maintained by homeowners associations or adjacent lot owners.
8. Wood fences should have pressure treated posts (ground contact rated) either set in 24-inch deep concrete footings or attached to footings by galvanized brackets. Rails and fence boards may be cedar, pressure-treated fir, or hemlock.

9. Where only short stretches of the pond perimeter (< 10 percent) have side slopes steeper than 3:1, split rail fences (3-foot minimum height) or densely planted thorned hedges (e.g., barberry, holly, etc.) may be used in place of a standard fence.

Signage

Detention ponds, infiltration ponds, wetponds, and combined ponds should have a sign placed for maximum visibility from adjacent streets, sidewalks, and paths. An example of sign specifications for a permanent surface water control pond is illustrated in Figure 3.12.

Right-of-Way

Right-of-way may be needed for detention pond maintenance. It is recommended that any tract not abutting public right-of-way have 15-20 foot wide extension of the tract to an acceptable access location.

Setbacks

It is recommended that facilities be a minimum of 20 feet from any structure, property line, and any vegetative buffer required by the local government. The detention pond water surface at the pond outlet invert elevation must be set back 100 feet from proposed or existing septic system drainfields. However, the setback requirements are generally specified by the local government, uniform building code, or other statewide regulation and may be different from those mentioned above.

All facilities must be a minimum of 50 feet from the top of any steep (greater than 15 percent) slope. A geotechnical analysis and report must be prepared addressing the potential impact of the facility on a steep slope.

Seeps and Springs

Intermittent seeps along cut slopes are typically fed by a shallow groundwater source (interflow) flowing along a relatively impermeable soil stratum. These flows are storm driven and should discontinue after a few weeks of dry weather. However, more continuous seeps and springs, which extend through longer dry periods, are likely from a deeper groundwater source. When continuous flows are intercepted and directed through flow control facilities, adjustments to the facility design may have to be made to account for the additional base flow (unless already considered in design).

Planting Requirements

Exposed earth on the pond bottom and interior side slopes should be sodded or seeded with an appropriate seed mixture. All remaining areas of the tract should be planted with grass or be landscaped and mulched with a 4-inch cover of hog fuel or shredded wood mulch. Shredded wood mulch is made from shredded tree trimmings, usually from trees cleared on site. The mulch should be free of garbage and weeds and should not

contain excessive resin, tannin, or other material detrimental to plant growth.

Landscaping

Landscaping is encouraged for most stormwater tract areas (see below for areas not to be landscaped). However, if provided, landscaping should adhere to the criteria that follow so as not to hinder maintenance operations. Landscaped stormwater tracts may, in some instances, provide a recreational space. In other instances, "naturalistic" stormwater facilities may be placed in open space tracts.

The following guidelines should be followed if landscaping is proposed for facilities.

1. No trees or shrubs may be planted within 10 feet of inlet or outlet pipes or manmade drainage structures such as spillways or flow spreaders. Species with roots that seek water, such as willow or poplar, should be avoided within 50 feet of pipes or manmade structures.
2. Planting should be restricted on berms that impound water either permanently or temporarily during storms. This restriction does not apply to cut slopes that form pond banks, only to berms.
   a) Trees or shrubs may not be planted on portions of water-impounding berms taller than four feet high. Only grasses may be planted on berms taller than four feet.

      Grasses allow unobstructed visibility of berm slopes for detecting potential dam safety problems such as animal burrows, slumping, or fractures in the berm.

   b) Trees planted on portions of water-impounding berms less than 4 feet high must be small, not higher than 20 feet mature height, and have a fibrous root system. Table 3.1 gives some examples of trees with these characteristics developed for the central Puget Sound.

      These trees reduce the likelihood of blow-down trees, or the possibility of channeling or piping of water through the root system, which may contribute to dam failure on berms that retain water.

Note: The internal berm in a wetpond is not subject to this planting restriction since the failure of an internal berm would be unlikely to create a safety problem.

3. All landscape material, including grass, should be planted in good topsoil. Native underlying soils may be made suitable for planting if amended with 4 inches of well-aged compost tilled into the subgrade. Compost used should meet specifications for Grade A compost quality as described in Ecology publication 94-38.

4. Soil in which trees or shrubs are planted may need additional enrichment or additional compost top-dressing. Consult a nurseryman, landscape professional, or arborist for site-specific recommendations.
5. For a naturalistic effect as well as ease of maintenance, trees or shrubs should be planted in clumps to form *"landscape islands"* rather than evenly spaced.
6. The landscaped islands should be a minimum of six feet apart, and if set back from fences or other barriers, the setback distance should also be a minimum of 6 feet. Where tree foliage extends low to the ground, the six feet setback should be counted from the outer drip line of the trees (estimated at maturity).

   This setback allows a 6-foot wide mower to pass around and between clumps.
7. Evergreen trees and trees which produce relatively little leaf-fall (such as Oregon ash, mimosa, or locust) are preferred in areas draining to the pond.
8. Trees should be set back so that branches do not extend over the pond (to prevent leaf-drop into the water).
9. Drought tolerant species are recommended.

Table 3.1 – Small Trees and Shrubs with Fibrous Roots

Small Trees / High Shrubs	Low Shrubs
*Red twig dogwood *(Cornus stolonifera)*	*Snowberry *(Symporicarpus albus)*
*Serviceberry *(Amelanchier alnifolia)*	*Salmonberry *(Rubus spectabilis)*
*Filbert (*Corylus cornuta*, others)	Rosa rugosa (avoid spreading varieties)
Highbush cranberry *(Vaccinium opulus)*	Rock rose *(Cistus spp.)*
Blueberry *(Vaccinium spp.)*	Ceanothus spp. choose hardier varieties)
Fruit trees on dwarf rootstock	New Zealand flax *(Phormium penax)*
Rhododendron (native and ornamental varieties)	Ornamental grasses (e.g., *Miscanthis, Pennisetum*)
*Native species	

Guidelines for Naturalistic Planting. Stormwater facilities may sometimes be located within open space tracts if "natural appearing." Two generic kinds of naturalistic planting are outlined below, but other options are also possible. Native vegetation is preferred in naturalistic plantings.

Open Woodland. In addition to the general landscaping guidelines above, the following are recommended.

1. Landscaped islands (when mature) should cover a minimum of 30 percent or more of the tract, exclusive of the pond area.
2. Tree clumps should be underplanted with shade-tolerant shrubs and groundcover plants. The goal is to provide a dense understory that need not be weeded or mowed.
3. Landscaped islands should be placed at several elevations rather than "ring" the pond, and the size of clumps should vary from small to large to create variety.
4. Not all islands need to have trees. Shrub or groundcover clumps are acceptable, but lack of shade should be considered in selecting vegetation.

Note: Landscaped islands are best combined with the use of wood-based mulch (hog fuel) or chipped onsite vegetation for erosion control (only for slopes above the flow control water surface). *It is often difficult to sustain a low-maintenance understory if the site was previously hydroseeded. Compost or composted mulch (typically used for constructed wetland soil) can be used below the flow control water surface (materials that are resistant to and preclude flotation). The method of construction of soil landscape systems can also cause natural selection of specific plant species. Consult a soil restoration or wetland soil scientist for site-specific recommendations.*

Northwest Savannah or Meadow. In addition to the general landscape guidelines above, the following are recommended.

1. Landscape islands (when mature) should cover 10 percent or more of the site, exclusive of the pond area.
2. Planting groundcovers and understory shrubs is encouraged to eliminate the need for mowing under the trees when they are young.
3. Landscape islands should be placed at several elevations rather than "ring" the pond.

The remaining site area should be planted with an appropriate grass seed mix, which may include meadow or wildflower species. Native or dwarf grass mixes are preferred. Table 3.2 below gives an example of dwarf grass mix developed for central Puget Sound. Grass seed should be applied at 2.5 to 3 pounds per 1,000 square feet.

Note: Amended soil or good topsoil is required for all plantings.

Creation of areas of emergent vegetation in shallow areas of the pond is recommended. Native wetland plants, such as sedges (Carex sp.), bulrush (*Scirpus sp.*), water plantain (*Alisma sp.*), and burreed (*Sparganium sp.*) are recommended. If the pond does not hold standing water, a clump of wet-tolerant, non-invasive shrubs, such as salmonberry or snowberry, is recommended below the detention design water surface.

Note: This landscape style is best combined with the use of grass or sod for site stabilization and erosion control.

Seed Mixes. The seed mixes listed below were developed for central Puget Sound.

Table 3.2 – Stormwater Tract "Low Grow" Seed Mix

Seed Name	Percentage of Mix
Dwarf tall fescue	40%
Dwarf perennial rye "Barclay"*	30%
Red fescue	25%
Colonial bentgrass	5%

* If wildflowers are used and sowing is done before Labor Day, the amount of dwarf perennial rye can be reduced proportionately to the amount of wildflower seed used.

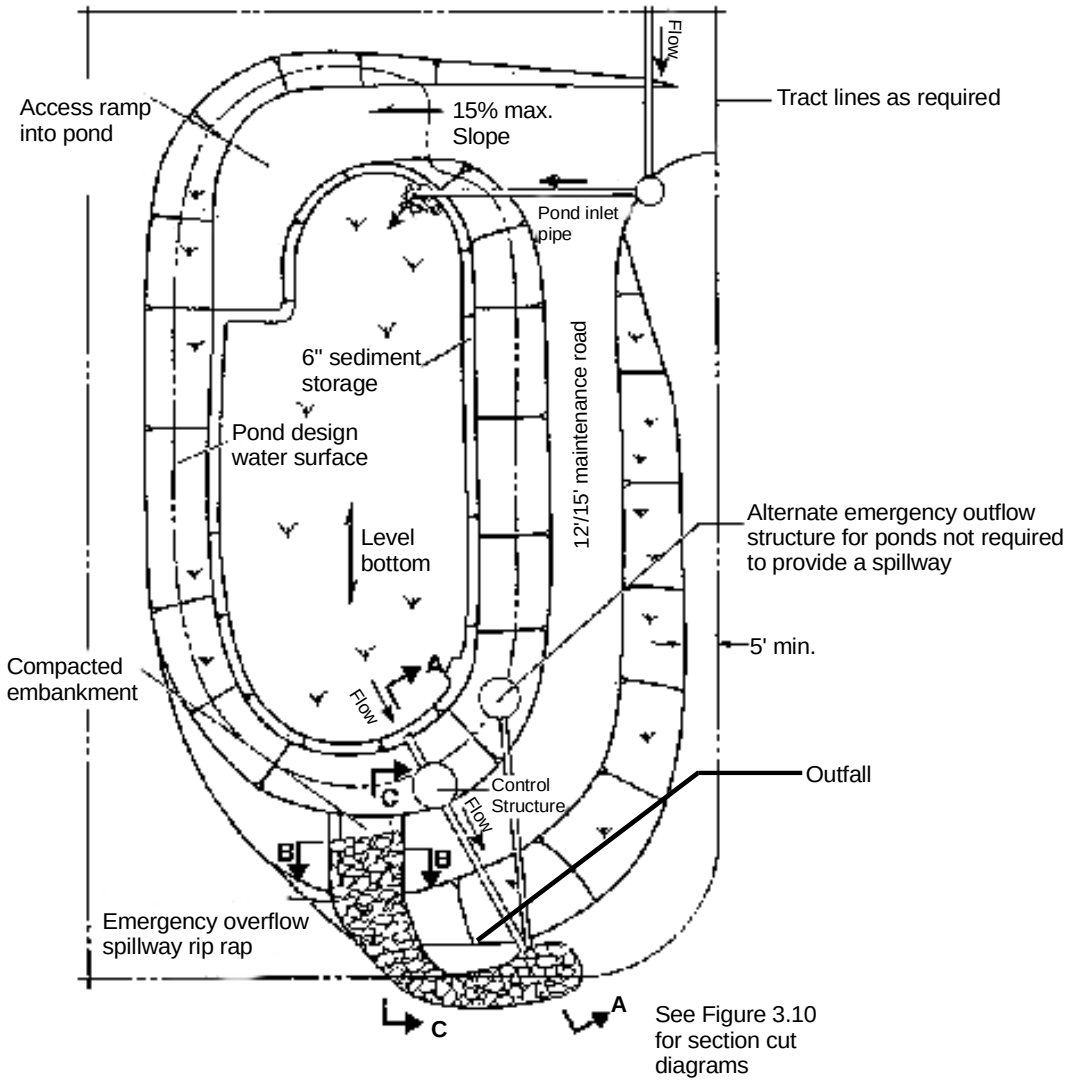

Note:
This detail is a schematic representation only. Actual configuration will vary depending on specific site constraints and applicable design criteria.

Figure 3.9 Typical Detention Pond

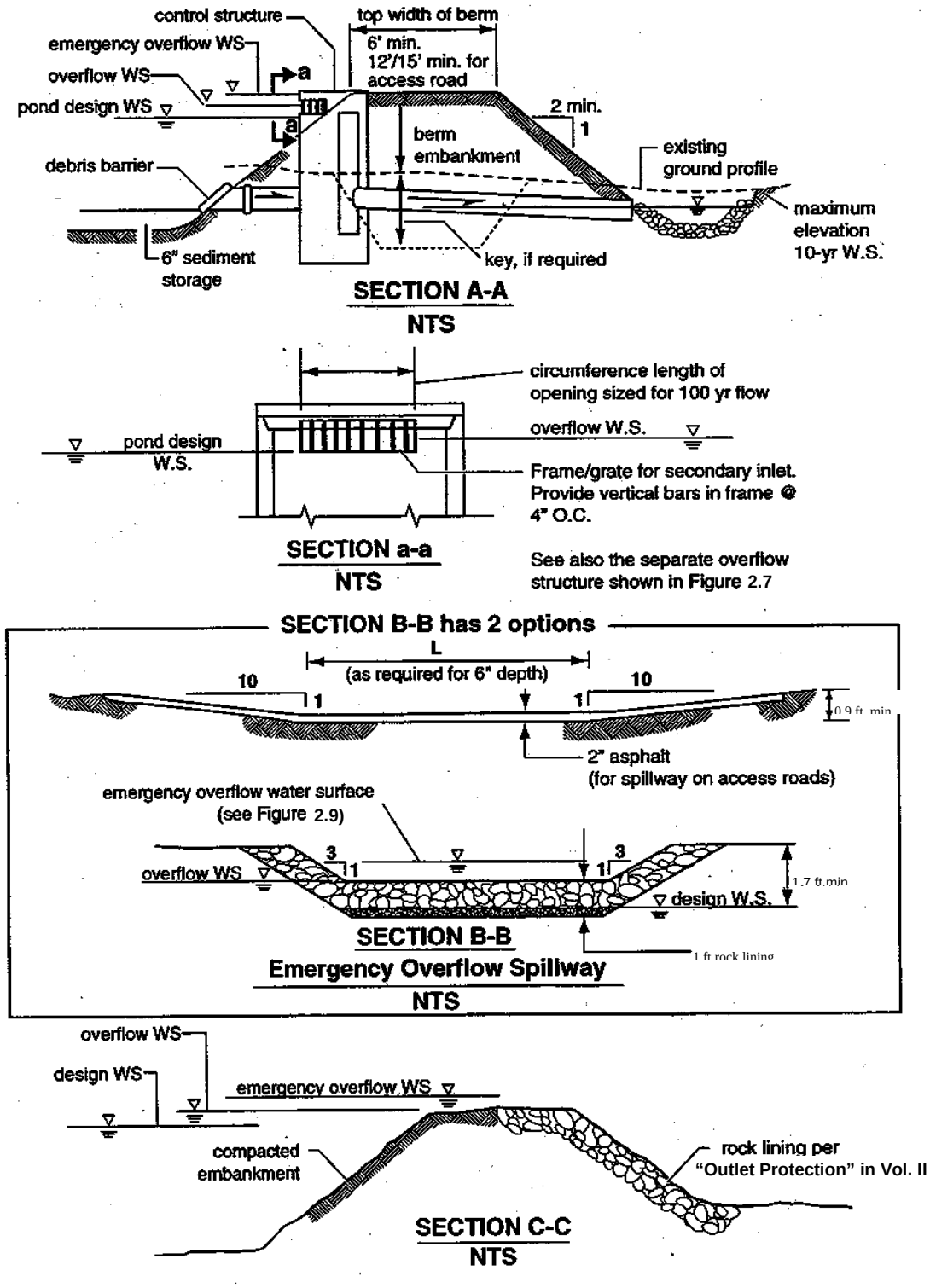

Figure 3.10 Typical Detention Pond Sections

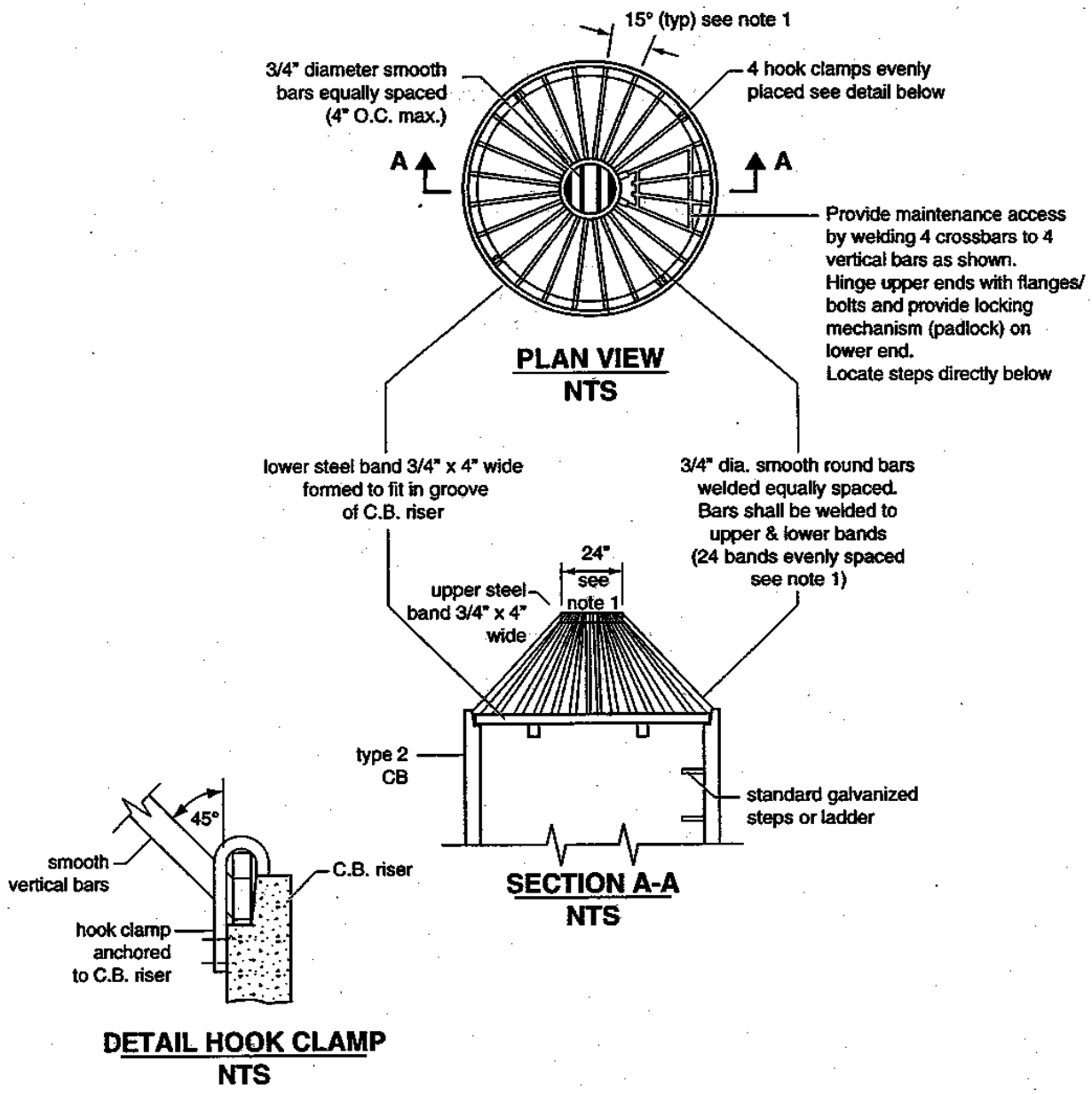

NOTES:

1. Dimensions are for illustration on 54" diameter CB For different diameter CB's adjust to maintain 45° angle on "vertical" bars and 7" o.c. maximum spacing of bars around lower steel band.
2. Metal parts must be corrosion resistant; steel bars must be galvanized.
3. This debris barrier is also recommended for use on the inlet to roadway cross-culverts with high potential for debris collection (except on type 2 streams)

Figure 3.11 Overflow Structure

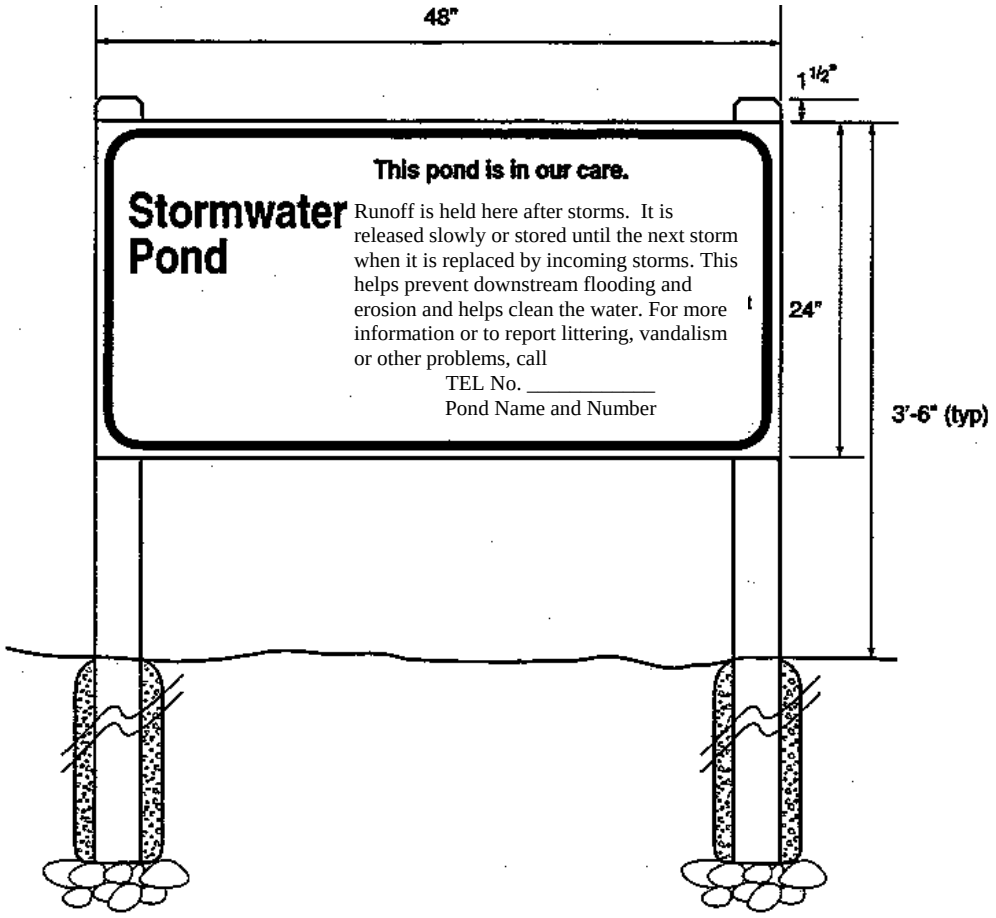

Figure 3.12 Example of Permanent Surface Water Control Pond Sign

Sample Specifications:

Size:	48 inches by 24 inches
Material:	0.125-gauge aluminum
Face:	Non-reflective vinyl or 3 coats outdoor enamel (sprayed).
Lettering:	Silk screen enamel where possible, or vinyl letters.
Colors:	Beige background, teal letters.
Type face:	Helvetica condensed. Title: 3 inch; Sub-Title: 1½ inch; Text: 1 inch; Outer
border:	1/8 inch border distance from edge: 1/4 inch; all text 1¾ inch from border.
Posts:	Pressure treated, beveled tops, 1½ inch higher than sign.
Installation:	Secure to chain link fence if available. Otherwise install on two 4"x4" posts, pressure treated, mounted atop gravel bed, installed in 30-inch concrete filled post holes (8-inch minimum diameter). Top of sign no higher than 42 inches from ground surface.
Placement:	Face sign in direction of primary visual or physical access. Do not block any access road. Do not place within 6 feet of structural facilities (e.g. manholes, spillways, pipe inlets).
Special Notes:	This facility is lined to protect groundwater (if a liner that restricts infiltration of stormwater exists).

Maintenance

General. Maintenance is of primary importance if detention ponds are to continue to function as originally designed. A local government, a designated group such as a homeowners' association, or some individual must accept the responsibility for maintaining the structures and the impoundment area. A specific maintenance plan must be formulated outlining the schedule and scope of maintenance operations. Debris removal in detention basins can be achieved through the use of trash racks or other screening devices.

Design with maintenance in mind. Good maintenance will be crucial to successful use of the impoundment. Hence, provisions to facilitate maintenance operations must be built into the project when it is installed. Maintenance must be a basic consideration in design and in determination of first cost. See Table 3.3 for specific maintenance requirements.

Any standing water removed during the maintenance operation must be disposed of to a sanitary sewer at an approved discharge location *Pretreatment may be necessary*. Residuals must be disposed in accordance with state and local solid waste regulations (See Minimum Functional Standards For Solid Waste Handling, Chapter 173-304 WAC).

Vegetation. If a shallow marsh is established, then periodic removal of dead vegetation may be necessary. Since decomposing vegetation can release pollutants captured in the wet pond, especially nutrients, it may be necessary to harvest dead vegetation annually prior to the winter wet season. Otherwise the decaying vegetation can export pollutants out of the pond and also can cause nuisance conditions to occur. If harvesting is to be done in the wetland, a written harvesting procedure should be prepared by a wetland scientist and submitted with the drainage design to the local government.

Sediment. Maintenance of sediment forebays and attention to sediment accumulation within the pond is extremely important. Sediment deposition should be continually monitored in the basin. Owners, operators, and maintenance authorities should be aware that significant concentrations of metals (e.g., lead, zinc, and cadmium) as well as some organics such as pesticides, may be expected to accumulate at the bottom of these treatment facilities. Testing of sediment, especially near points of inflow, should be conducted regularly to determine the leaching potential and level of accumulation of potentially hazardous material before disposal.

Table 3.3 Specific Maintenance Requirements for Detention Ponds			
Maintenance Component	**Defect**	**Conditions When Maintenance Is Needed**	**Results Expected When Maintenance Is Performed**
General	Trash & Debris	Any trash and debris which exceed 5 cubic feet per 1,000 square feet (this is about equal to the amount of trash it would take to fill up one standard size garbage can). In general, there should be no visual evidence of dumping. If less than threshold all trash and debris will be removed as part of next scheduled maintenance.	Trash and debris cleared from site.
	Poisonous Vegetation and noxious weeds	Any poisonous or nuisance vegetation which may constitute a hazard to maintenance personnel or the public. Any evidence of noxious weeds as defined by State or local regulations. (Apply requirements of adopted Integrated Pest Management (IPM) policies for the use of herbicides).	No danger of poisonous vegetation where maintenance personnel or the public might normally be. (Coordinate with local health department) Complete eradication of noxious weeds may not be possible. Compliance with State or local eradication policies required
	Contaminants and Pollution	Any evidence of oil, gasoline, contaminants or other pollutants (Coordinate removal/cleanup with local water quality response agency).	No contaminants or pollutants present.
	Rodent Holes	Any evidence of rodent holes if facility is acting as a dam or berm, or any evidence of water piping through dam or berm via rodent holes.	Rodents destroyed and dam or berm repaired. (Coordinate with local health department and Ecology Dam Safety Office if pone exceeds 10 acre feet)

Table 3.3 Specific Maintenance Requirements for Detention Ponds			
Maintenance Component	**Defect**	**Conditions When Maintenance Is Needed**	**Results Expected When Maintenance Is Performed**
	Beaver Dams	Dam results in change or function of the facility.	Facility is returned to design function. (Coordinate trapping of beavers and removal of dams with appropriate permitting agencies)
	Insects	When insects such as wasps and hornets interfere with maintenance activities.	Insects destroyed or removed from site. Apply insecticides in compliance with adopted IPM policies
	Tree Growth and Hazard Trees	Tree growth does not allow maintenance access or interferes with maintenance activity (i.e., slope mowing, silt removal, vactoring, or equipment movements). If trees are not interfering with access or maintenance, do not remove If dead, diseased, or dying trees are identified (Use a certified Arborist to determine health of tree or removal requirements)	Trees do not hinder maintenance activities. Harvested trees should be recycled into mulch or other beneficial uses (e.g., alders for firewood). Remove hazard trees
Side Slopes of Pond	Erosion	Eroded damage over 2 inches deep where cause of damage is still present or where there is potential for continued erosion. Any erosion observed on a compacted berm embankment.	Slopes should be stabilized using appropriate erosion control measure(s); e.g., rock reinforcement, planting of grass, compaction. If erosion is occurring on compacted berms a licensed civil engineer should be consulted to resolve source of erosion.

Table 3.3 Specific Maintenance Requirements for Detention Ponds			
Maintenance Component	**Defect**	**Conditions When Maintenance Is Needed**	**Results Expected When Maintenance Is Performed**
Storage Area	Sediment	Accumulated sediment that exceeds 10% of the designed pond depth unless otherwise specified or affects inletting or outletting condition of the facility.	Sediment cleaned out to designed pond shape and depth; pond reseeded if necessary to control erosion.
	Liner (If Applicable)	Liner is visible and has more than three 1/4-inch holes in it.	Liner repaired or replaced. Liner is fully covered.
Pond Berms (Dikes)	Settlements	Any part of berm which has settled 4 inches lower than the design elevation. If settlement is apparent measure berm to determine amount of settlement. Settling can be an indication of more severe problems with the berm or outlet works. A licensed civil engineer should be consulted to determine the source of the settlement.	Dike is built back to the design elevation.
	Piping	Discernable water flow through pond berm. Ongoing erosion with potential for erosion to continue. (Recommend a Goethechnical engineer be called in to inspect and evaluate condition and recommend repair of condition.	Piping eliminated. Erosion potential resolved.
Emergency Overflow/Spillway and Berms over 4 feet in height.	Tree Growth	Tree growth on emergency spillways create blockage problems and may cause failure of the berm due to uncontrolled overtopping. Tree growth on berms over 4 feet in height may lead to piping through the berm which could lead to failure of the berm.	Trees should be removed. If root system is small (base less than 4 inches) the root system may be left in place. Otherwise the roots should be removed and the berm restored. A licensed civil engineer should be consulted for proper berm/spillway restoration.
	Piping	Discernable water flow through pond berm. Ongoing erosion with potential for erosion to continue. (Recommend a Goethechnical engineer be called in to inspect and evaluate condition and recommend repair of condition.	Piping eliminated. Erosion potential resolved.

Table 3.3 Specific Maintenance Requirements for Detention Ponds			
Maintenance Component	**Defect**	**Conditions When Maintenance Is Needed**	**Results Expected When Maintenance Is Performed**
Emergency Overflow/Spillway	Emergency Overflow/ Spillway	Only one layer of rock exists above native soil in area five square feet or larger, or any exposure of native soil at the top of out flow path of spillway. (Rip-rap on inside slopes need not be replaced.)	Rocks and pad depth are restored to design standards.
	Erosion	See "Side slopes of Pond"	

Methods of Analysis

Detention Volume and Outflow. The volume and outflow design for detention ponds must be in accordance with Minimum Requirements #7 in Volume I and the hydrologic analysis and design methods in Chapter 1 of this Volume. Design guidelines for restrictor orifice structures are given in Section 3.2.4.

Note: The design water surface elevation is the highest elevation which occurs in order to meet the required outflow performance for the pond.

Detention Ponds in Infiltrative Soils. Detention ponds may occasionally be sited on till soils that are sufficiently permeable for a properly functioning infiltration system (see Section 3.3). These detention ponds have a surface discharge and may also utilize infiltration as a second pond outflow. Detention ponds sized with infiltration as a second outflow must meet all the requirements of Section 3.3 for infiltration ponds, including a soils report, testing, groundwater protection, pre-settling, and construction techniques.

Emergency Overflow Spillway Capacity. For impoundments under 10-acre-feet, the emergency overflow spillway weir section must be designed to pass the 100-year runoff event for developed conditions assuming a broad-crested weir. The **broad-crested weir equation** for the spillway section in Figure 3.13, for example, would be:

$$Q_{100} = C\,(2g)^{1/2}\left[\frac{2}{3}LH^{3/2} + \frac{8}{15}(\mathrm{Tan}\,\theta)\,H^{5/2}\right] \qquad \text{(equation 1)}$$

Where Q_{100} = peak flow for the 100-year runoff event (cfs)
C = discharge coefficient (0.6)
g = gravity (32.2 ft/sec^2)
L = length of weir (ft)

H	=	height of water over weir (ft)
θ	=	angle of side slopes

Q_{100} is either the peak 10-minute flow computed from the 100-year, 24-hour storm and a Type 1A distribution, or the 100-year, 1-hour flow, indicated by an approved continuous runoff model, multiplied by a factor of 1.6.

Assuming C = 0.6 and Tan θ = 3 (for 3:1 slopes), the equation becomes:

$$Q_{100} = 3.21[LH^{3/2} + 2.4\ H^{5/2}] \qquad \text{(equation 2)}$$

To find width *L* for the weir section, the equation is rearranged to use the computed Q_{100} and trial values of H (0.2 feet minimum):

$$L = [Q_{100}/(3.21H^{3/2})] - 2.4\ H \quad \text{or} \quad 6 \text{ feet minimum} \qquad \text{(equation 3)}$$

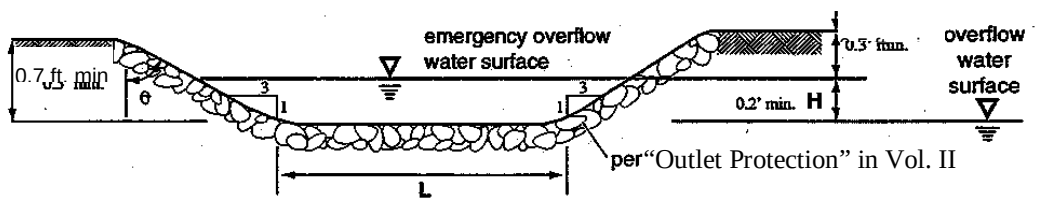

Figure 3.13 Weir Section for Emergency Overflow Spillway

3.2.2 Detention Tanks

Detention tanks are underground storage facilities typically constructed with large diameter corrugated metal pipe. Standard detention tank details are shown in Figure 3.14 and Figure 3.15. Control structure details are shown in Section 3.2.4.

Design Criteria

General. Typical design guidelines are as follows:

1. Tanks may be designed as flow-through systems with manholes in line (see Figure 3.14) to promote sediment removal and facilitate maintenance. Tanks may be designed as back-up systems if preceded by water quality facilities, since little sediment should reach the inlet/control structure and low head losses can be expected because of the proximity of the inlet/control structure to the tank

2. The detention tank bottom should be located 0.5 feet below the inlet and outlet to provide dead storage for sediment.

3. The minimum pipe diameter for a detention tank is 36 inches.

4. Tanks larger than 36 inches may be connected to each adjoining structure with a short section (2-foot maximum length) of 36-inch minimum diameter pipe.

5. Details of outflow control structures are given in Section 3.2.4.

Note: Control and access manholes should have additional ladder rungs to allow ready access to all tank access pipes when the catch basin sump is filled with water (see Figure 3.17, plan view).

Materials. Galvanized metals leach zinc into the environment, especially in standing water situations. This can result in zinc concentrations that can be toxic to aquatic life. Therefore, use of galvanized materials in stormwater facilities and conveyance systems is discouraged. Where other metals, such as aluminum or stainless steel, or plastics are available, they should be used.

Pipe material, joints, and protective treatment for tanks should be in accordance with Section 9.05 of the *WSDOT/APWA Standard Specification*.

Structural Stability. Tanks must meet structural requirements for overburden support and traffic loading if appropriate. H-20 live loads must be accommodated for tanks lying under parking areas and access roads. Metal tank end plates must be designed for structural stability at maximum hydrostatic loading conditions. Flat end plates generally require thicker gage material than the pipe and/or require reinforcing ribs. Tanks must be placed on stable, well consolidated native material with a suitable bedding. Tanks must not be placed in fill slopes, unless analyzed in a geotechnical report for stability and constructability.

Buoyancy. In moderately pervious soils where seasonal groundwater may induce flotation, buoyancy tendencies must be balanced either by ballasting with backfill or concrete backfill, providing concrete anchors, increasing the total weight, or providing subsurface drains to permanently lower the groundwater table. Calculations that demonstrate stability must be documented.

Access. The following guidelines for access may be used.

1. The maximum depth from finished grade to tank invert should be 20 feet.

2. Access openings should be positioned a maximum of 50 feet from any location within the tank.

3. All tank access openings may have round, solid locking lids (usually 1/2 to 5/8-inch diameter Allen-head cap screws).

4. Thirty-six-inch minimum diameter CMP riser-type manholes (Figure 3.15) of the same gage as the tank material may be used for access along the length of the tank and at the upstream terminus of the tank in a backup system. The top slab is separated (1-inch minimum gap) from the top of the riser to allow for deflections from vehicle loadings without damaging the riser tank.

5. All tank access openings must be readily accessible by maintenance vehicles.

6. Tanks must comply with the OSHA confined space requirements, which includes clearly marking entrances to confined space areas. This may be accomplished by hanging a removable sign in the access riser(s), just under the access lid.

Access Roads. Access roads are needed to all detention tank control structures and risers. The access roads must be designed and constructed as specified for detention ponds in Section 3.2.1.

Right-of-Way. Right-of-way may be needed for detention tank maintenance. It is recommended that any tract not abutting public right-of-way have a 15 to 20-foot wide extension of the tract to accommodate an access road to the facility.

Setbacks. It is recommended that facilities be a minimum of 20 feet from any structure, property line, and any vegetative buffer required by the local government and from any septic drainfield. However, the setback requirements are generally specified by the local government, uniform building code, or other statewide regulation and may be different from those mentioned above.

All facilities must be a minimum of 50 feet from the top of any steep (greater than 15 percent) slope. A geotechnical analysis and report must be prepared addressing the potential impact of the facility on a steep slope.

Maintenance. Provisions to facilitate maintenance operations must be built into the project when it is installed. Maintenance must be a basic consideration in design and in determination of first cost. See Table 3.4 for specific maintenance requirements.

Table 3.4 Specific Maintenance Requirements for Detention Vaults/Tanks			
Maintenance Component	**Defect**	**Conditions When Maintenance is Needed**	**Results Expected When Maintenance is Performed**
Storage Area	Plugged Air Vents	One-half of the cross section of a vent is blocked at any point or the vent is damaged.	Vents open and functioning.
	Debris and Sediment	Accumulated sediment depth exceeds 10% of the diameter of the storage area for 1/2 length of storage vault or any point depth exceeds 15% of diameter. (Example: 72-inch storage tank would require cleaning when sediment reaches depth of 7 inches for more than 1/2 length of tank.)	All sediment and debris removed from storage area.
	Joints Between Tank/Pipe Section	Any openings or voids allowing material to be transported into facility. (Will require engineering analysis to determine structural stability).	All joint between tank/pipe sections are sealed.
	Tank Pipe Bent Out of Shape	Any part of tank/pipe is bent out of shape more than 10% of its design shape. (Review required by engineer to determine structural stability).	Tank/pipe repaired or replaced to design.
	Vault Structure Includes Cracks in Wall, Bottom, Damage to Frame and/or Top Slab	Cracks wider than 1/2-inch and any evidence of soil particles entering the structure through the cracks, or maintenance/inspection personnel determines that the vault is not structurally sound.	Vault replaced or repaired to design specifications and is structurally sound.
		Cracks wider than 1/2-inch at the joint of any inlet/outlet pipe or any evidence of soil particles entering the vault through the walls.	No cracks more than 1/4-inch wide at the joint of the inlet/outlet pipe.
Manhole	Cover Not in Place	Cover is missing or only partially in place. Any open manhole requires maintenance.	Manhole is closed.
	Locking Mechanism Not Working	Mechanism cannot be opened by one maintenance person with proper tools. Bolts into frame have less than 1/2 inch of thread (may not apply to self-locking lids).	Mechanism opens with proper tools.
	Cover Difficult to Remove	One maintenance person cannot remove lid after applying normal lifting pressure. Intent is to keep cover from sealing off access to maintenance.	Cover can be removed and reinstalled by one maintenance person.
	Ladder Rungs Unsafe	Ladder is unsafe due to missing rungs, misalignment, not securely attached to structure wall, rust, or cracks.	Ladder meets design standards. Allows maintenance person safe access.

Methods of Analysis **Detention Volume and Outflow**

The volume and outflow design for detention tanks must be in accordance with Minimum Requirement #7 in Volume I and the hydrologic analysis and design methods in Chapter 2. Restrictor and orifice design are given in Section 3.2.4.

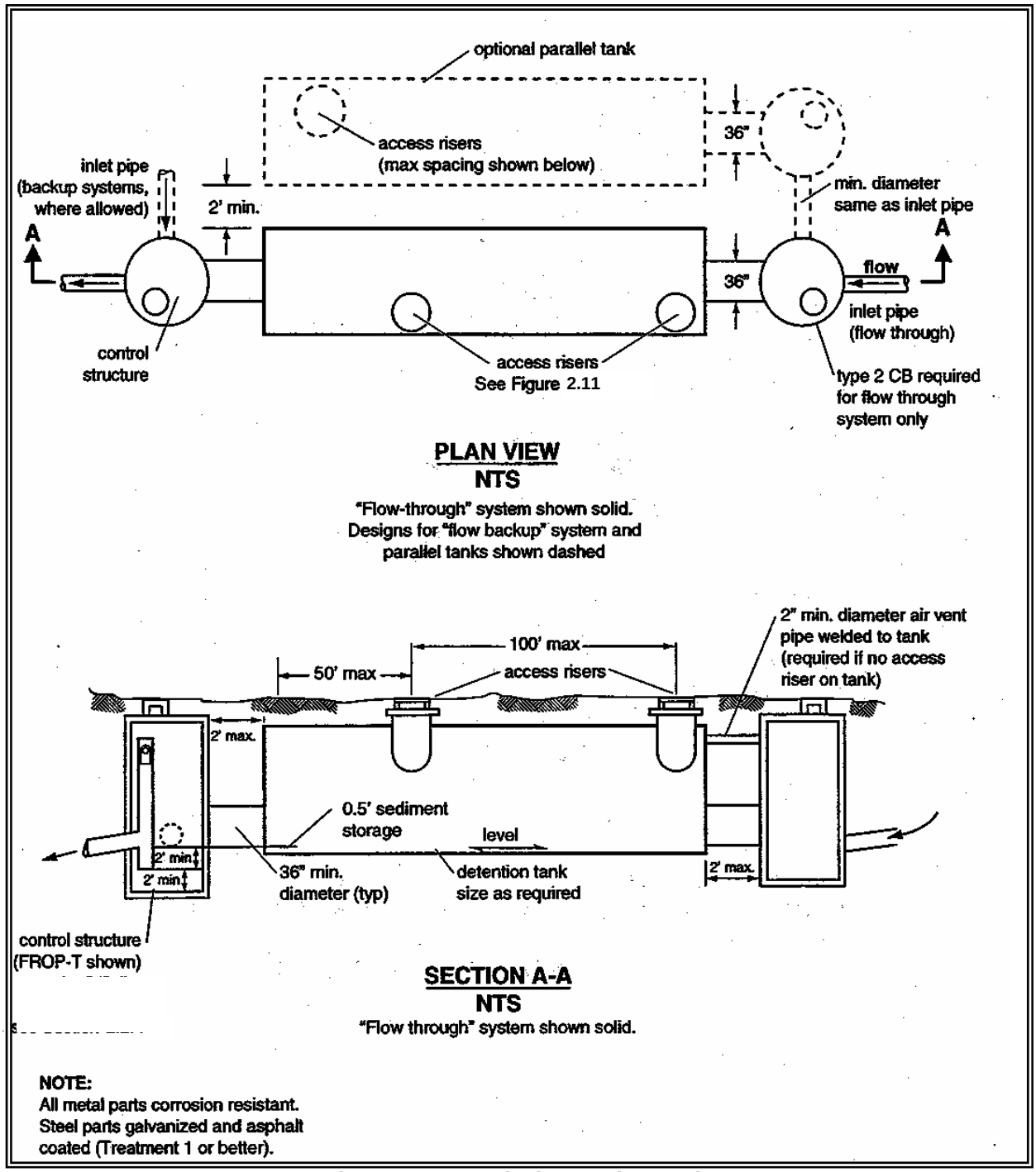

Figure 3.14 – Typical Detention Tank

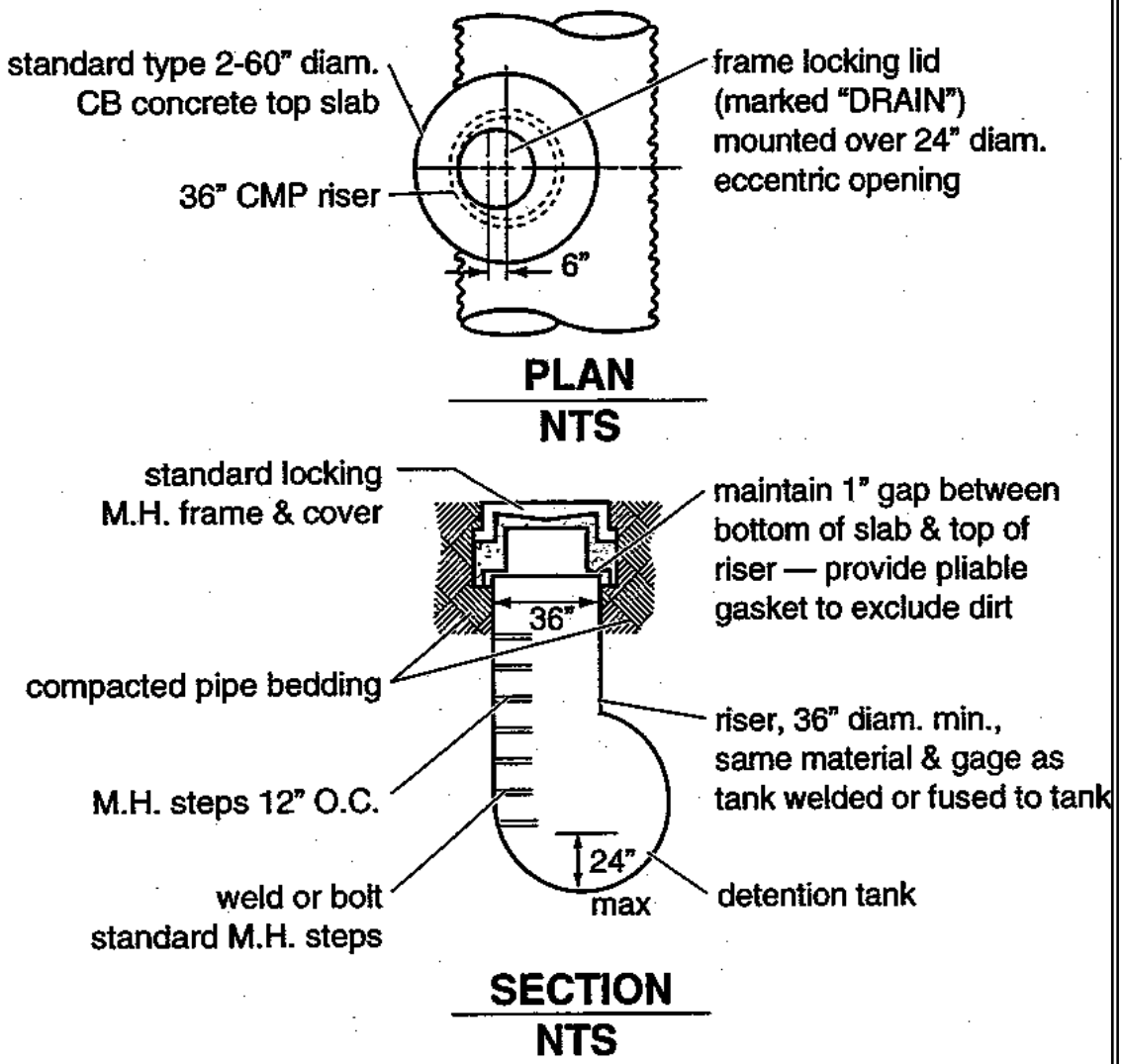

Figure 3.15 – Detention Tank Access Detail

Notes:

1. Use adjusting blocks as required to bring frame to grade.
2. All materials to be aluminum or galvanized and asphalt coated (Treatment 1 or better).
3. Must be located for access by maintenance vehicles.
4. May substitute WSDOT special Type IV manhole (RCP only).

3.2.3 Detention Vaults

Detention vaults are box-shaped underground storage facilities typically constructed with reinforced concrete. A standard detention vault detail is shown in Figure 3.16. Control structure details are shown in Section 3.2.4.

Design Criteria

General. Typical design guidelines are as follows:

1. Detention vaults may be designed as flow-through systems with bottoms level (longitudinally) or sloped toward the inlet to facilitate sediment removal. Distance between the inlet and outlet should be maximized (as feasible).

2. The detention vault bottom may slope at least 5 percent from each side towards the center, forming a broad "v" to facilitate sediment removal. More than one "v" may be used to minimize vault depth. However, the vault bottom may be flat with 0.5-1 foot of sediment storage if removable panels are provided over the entire vault. It is recommended that the removable panels be at grade, have stainless steel lifting eyes, and weigh no more than 5 tons per panel.

3. The invert elevation of the outlet should be elevated above the bottom of the vault to provide an average 6 inches of sediment storage over the entire bottom. The outlet should also be elevated a minimum of 2 feet above the orifice to retain oil within the vault.

4. Details of outflow control structures are given in Section 3.2.4.

Materials. Minimum 3,000 psi structural reinforced concrete may be used for detention vaults. All construction joints must be provided with water stops.

Structural Stability. All vaults must meet structural requirements for overburden support and H-20 traffic loading (See Standard Specifications for Highway Bridges, 1998 Interim Revisions, American Association of State Highway and Transportation Officials). Vaults located under roadways must meet any live load requirements of the local government. Cast-in-place wall sections must be designed as retaining walls. Structural designs for cast-in-place vaults must be stamped by a licensed civil engineer with structural expertise. Vaults must be placed on stable, well-consolidated native material with suitable bedding. Vaults must not be placed in fill slopes, unless analyzed in a geotechnical report for stability and constructability.

Access. Access must be provided over the inlet pipe and outlet structure. The following guidelines for access may be used.

1. Access openings should be positioned a maximum of 50 feet from any location within the tank. Additional access points may be needed on large vaults. If more than one "v" is provided in the vault floor, access to each "v" must be provided.

2. For vaults with greater than 1,250 square feet of floor area, a 5' by 10' removable panel should be provided over the inlet pipe (instead of a standard frame, grate and solid cover). Alternatively, a separate access vault may be provided as shown in Figure 3.16.

3. For vaults under roadways, the removable panel must be located outside the travel lanes. Alternatively, multiple standard locking manhole covers may be provided. Ladders and hand-holds need only be provided at the outlet pipe and inlet pipe, and as needed to meet OSHA confined space requirements. Vaults providing manhole access at 12-foot spacing need not provide corner ventilation pipes as specified in Item 10 below.

4. All access openings, except those covered by removable panels, may have round, solid locking lids, or 3-foot square, locking diamond plate covers.

5. Vaults with widths 10 feet or less must have removable lids.

6. The maximum depth from finished grade to the vault invert should be 20 feet.

7. Internal structural walls of large vaults should be provided with openings sufficient for maintenance access between cells. The openings should be sized and situated to allow access to the maintenance "v" in the vault floor.

8. The minimum internal height should be 7 feet from the highest point of the vault floor (not sump), and the minimum width should be 4 feet. However, concrete vaults may be a minimum 3 feet in height and width if used as tanks with access manholes at each end, and if the width is no larger than the height. Also the minimum internal height requirement may not be needed for any areas covered by removable panels.

9. Vaults must comply with the OSHA confined space requirements, which includes clearly marking entrances to confined space areas. This may be accomplished by hanging a removable sign in the access riser(s), just under the access lid.

10. Ventilation pipes (minimum 12-inch diameter or equivalent) should be provided in all four corners of vaults to allow for artificial ventilation prior to entry of maintenance personnel into the vault. Alternatively removable panels over the entire vault may be provided.

Access Roads. Access roads are needed to the access panel (if applicable), the control structure, and at least one access point per cell, and they may be designed and constructed as specified for detention ponds in Section 3.2.1.

Right-of-Way. Right-of-way is needed for detention vaults maintenance. It is recommended that any tract not abutting public right-of-way should have a 15 to 20-foot wide extension of the tract to accommodate an access road to the facility.

Setbacks. It is recommended that facilities be a minimum of 20 feet from any structure, property line, and any vegetative buffer required by the local government and from any septic drainfield. However, the setback requirements are generally specified by the local government, uniform building code, or other statewide regulation and may be different from those mentioned above.

All facilities must be a minimum of 50 feet from the top of any steep (greater than 15 percent) slope. A geotechnical analysis and report must be prepared addressing the potential impact of the facility on a steep slope.

Maintenance. Provisions to facilitate maintenance operations must be built into the project when it is installed. Maintenance must be a basic consideration in design and in determination of first cost. See Table 3.4 for specific maintenance requirements.

Methods of Analysis

Detention Volume and Outflow

The volume and outflow design for detention vaults must be in accordance with Minimum Requirement #7 in Volume I and the hydrologic analysis and design methods in Chapter 1. Restrictor and orifice design are given in Section 3.2.4.

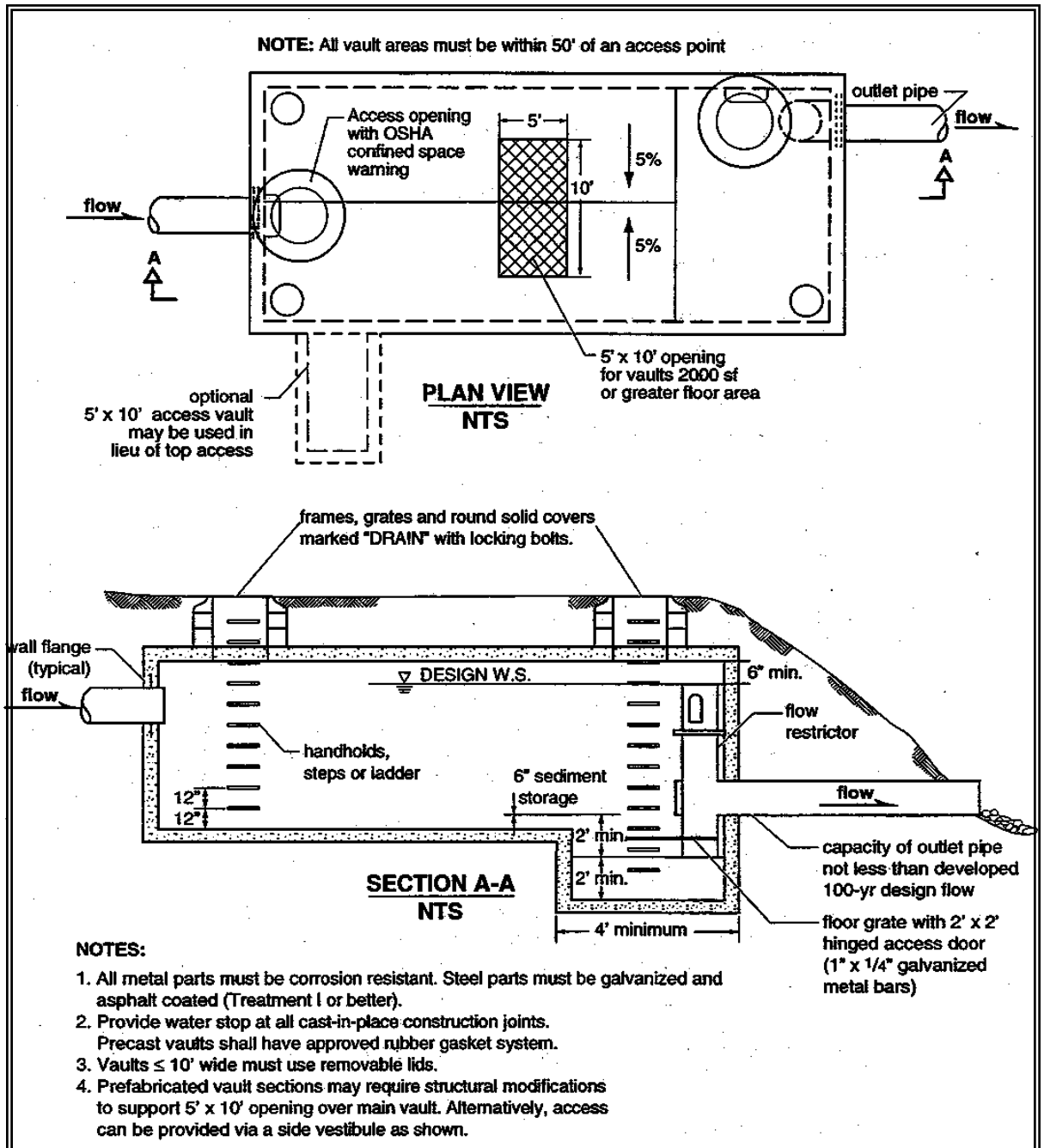

NOTES:

1. All metal parts must be corrosion resistant. Steel parts must be galvanized and asphalt coated (Treatment I or better).
2. Provide water stop at all cast-in-place construction joints. Precast vaults shall have approved rubber gasket system.
3. Vaults ≤ 10' wide must use removable lids.
4. Prefabricated vault sections may require structural modifications to support 5' x 10' opening over main vault. Alternatively, access can be provided via a side vestibule as shown.

Figure 3.16 Typical Detention Vault

3.2.4 Control Structures

Control structures are catch basins or manholes with a restrictor device for controlling outflow from a facility to meet the desired performance. Riser type restrictor devices ("tees" or "FROP-Ts") also provide some incidental oil/water separation to temporarily detain oil or other floatable pollutants in runoff due to accidental spill or illegal dumping.

The restrictor device usually consists of two or more orifices and/or a weir section sized to meet performance requirements.

Standard control structure details are shown in Figure 3.17 through Figure 3.19.

Design Criteria

Multiple Orifice Restrictor

In most cases, control structures need only two orifices: one at the bottom and one near the top of the riser, although additional orifices may best utilize detention storage volume. Several orifices may be located at the same elevation if necessary to meet performance requirements.

1. Minimum orifice diameter is 0.5 inches. Note: In some instances, a 0.5-inch bottom orifice will be too large to meet target release rates, even with minimal head. In these cases, the live storage depth need not be reduced to less than 3 feet in an attempt to meet the performance standards. Also, under such circumstances, flow-throttling devices may be a feasible option. These devices will throttle flows while maintaining a plug-resistant opening.

2. Orifices may be constructed on a tee section as shown in Figure 3.17 or on a baffle as shown in Figure 3.18.

3. In some cases, performance requirements may require the top orifice/elbow to be located too high on the riser to be physically constructed (e.g., a 13-inch diameter orifice positioned 0.5 feet from the top of the riser). In these cases, a notch weir in the riser pipe may be used to meet performance requirements (see Figure 3.21).

4. Consideration must be given to the backwater effect of water surface elevations in the downstream conveyance system. High tailwater elevations may affect performance of the restrictor system and reduce live storage volumes.

Riser and Weir Restrictor

1. Properly designed weirs may be used as flow restrictors (see Figure 3.19 and Figure 3.21 through Figure 3.23). However, they must be designed to provide for primary overflow of the developed 100-year peak flow discharging to the detention facility.

2. The combined orifice and riser (or weir) overflow may be used to meet performance requirements; however, the design must still provide for primary overflow of the developed 100-year peak flow assuming all orifices are plugged. Figure 3.24 can be used to calculate the head in feet above a riser of given diameter and flow.

Access. The following guidelines for access may be used.

1. An access road to the control structure is needed for inspection and maintenance, and must be designed and constructed as specified for detention ponds in Section 3.3.1.

2. Manhole and catch basin lids for control structures must be locking, and rim elevations must match proposed finish grade.

3. Manholes and catch-basins must meet the OSRA confined space requirements, which include clearly marking entrances to confined space areas. This may be accomplished by hanging a removable sign in the access riser, just under the access lid.

Information Plate. It is recommended that a brass or stainless steel plate be permanently attached inside each control structure with the following information engraved on the plate:

Name and file number of project

Name and company of (1) developer, (2) engineer, and (3) contractor

Date constructed

Date of manual used for design

Outflow performance criteria

Release mechanism size, type, and invert elevation

List of stage, discharge, and volume at one-foot increments

Elevation of overflow

Recommended frequency of maintenance.

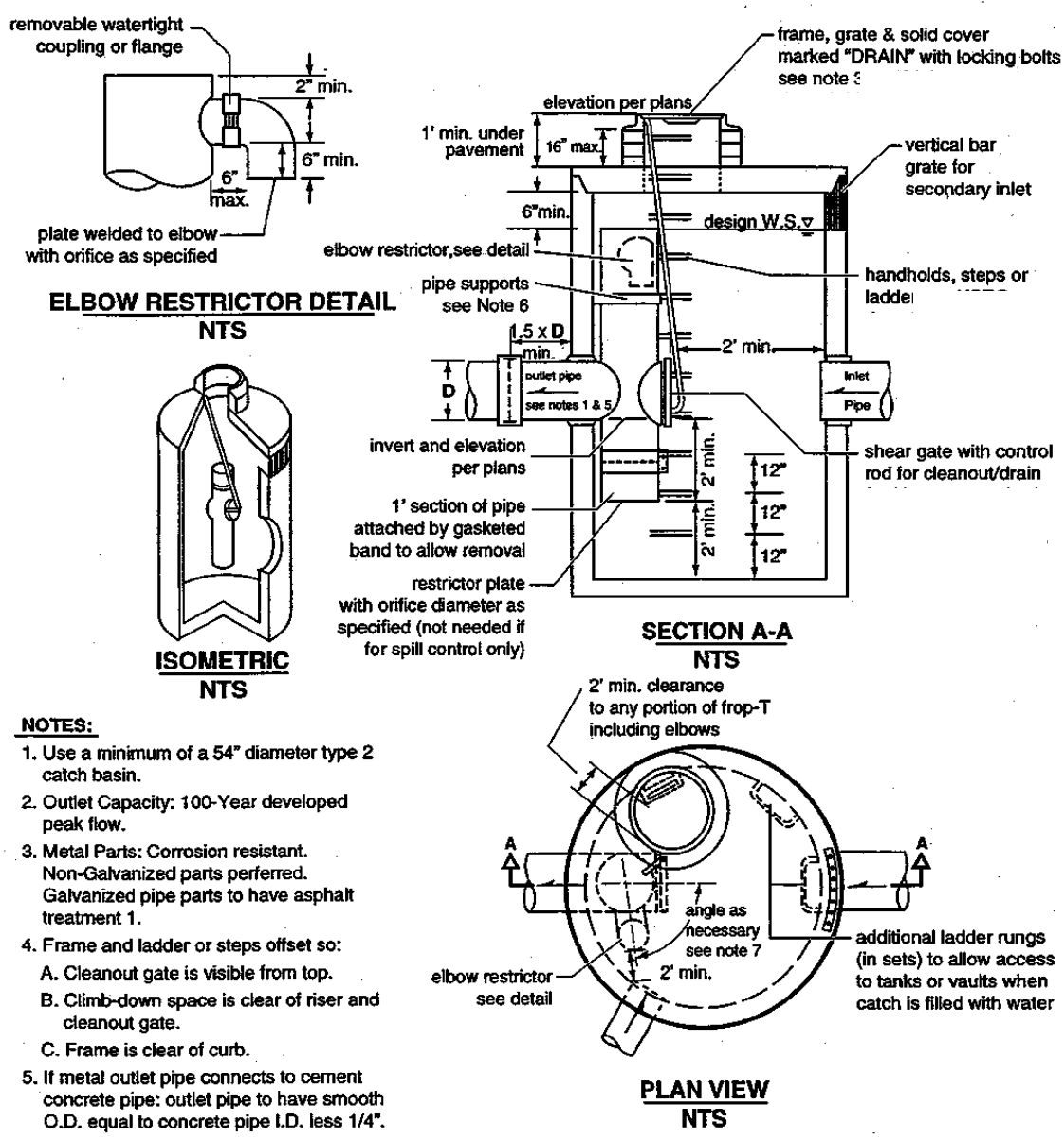

NOTES:

1. Use a minimum of a 54" diameter type 2 catch basin.
2. Outlet Capacity: 100-Year developed peak flow.
3. Metal Parts: Corrosion resistant. Non-Galvanized parts perferred. Galvanized pipe parts to have asphalt treatment 1.
4. Frame and ladder or steps offset so:
   A. Cleanout gate is visible from top.
   B. Climb-down space is clear of riser and cleanout gate.
   C. Frame is clear of curb.
5. If metal outlet pipe connects to cement concrete pipe: outlet pipe to have smooth O.D. equal to concrete pipe I.D. less 1/4".
6. Provide at least one 3" X .090 inches support bracket anchored to concrete wall. (maximum 3'-0" vertical spacing)
7. Locate elbow restrictor(s) as necessary to provide minimum clearance as shown.
8. Locate additional ladder rungs in structures used as access to tanks or vaults to allow access when catch basin is filled with water.

Figure 3.17 Flow Restrictor (TEE)

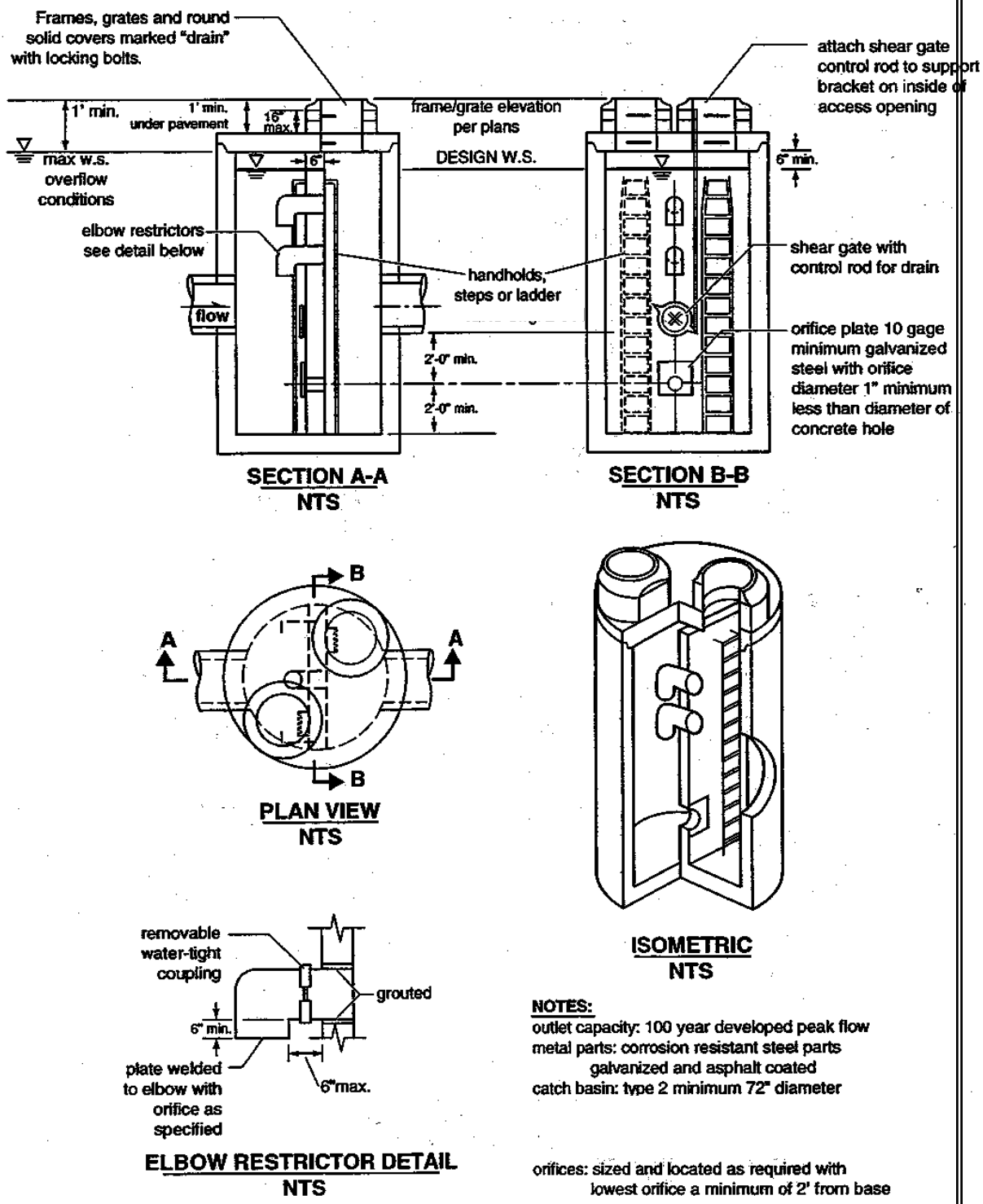

Figure 3.18 Flow Restrictor (Baffle)

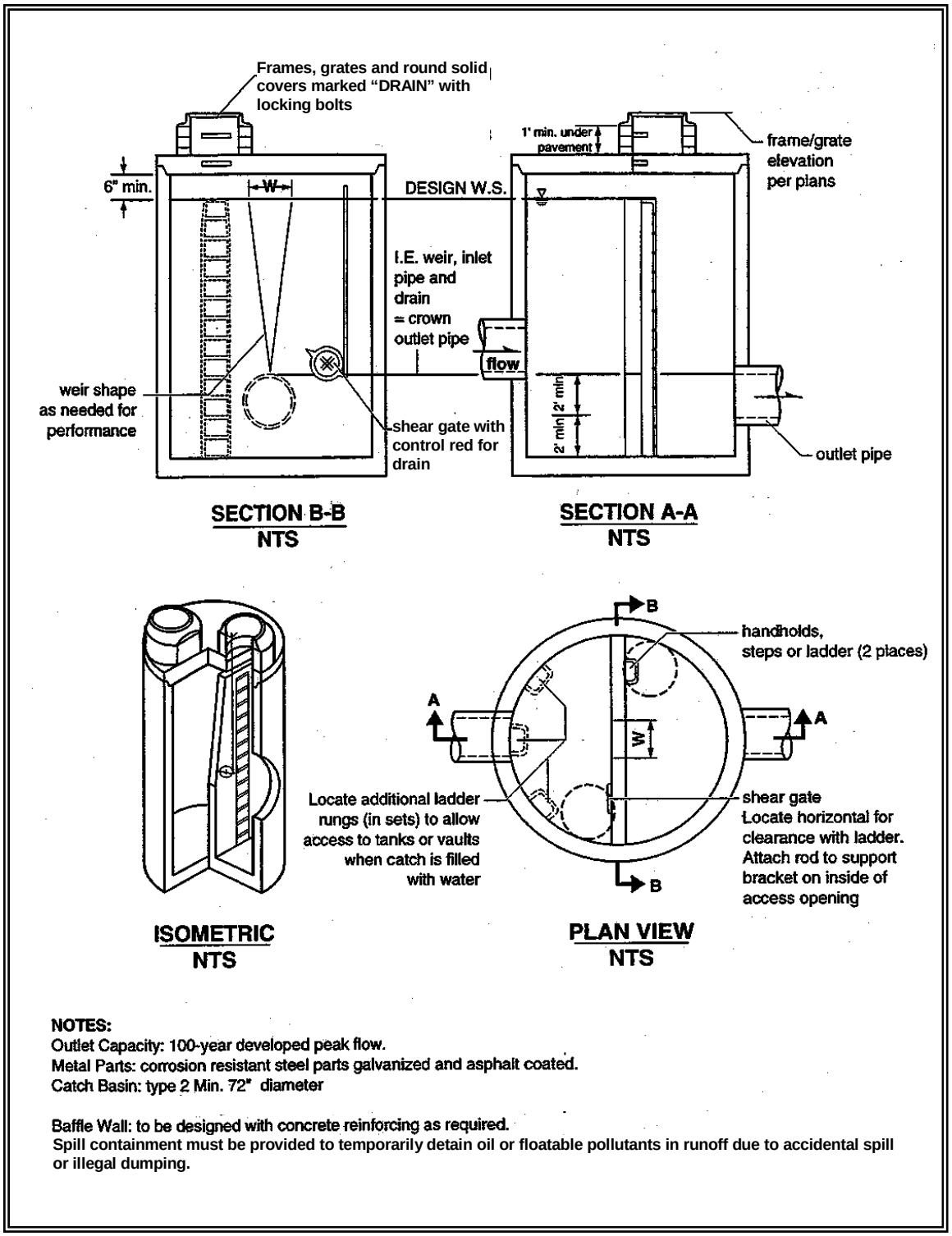

NOTES:
Outlet Capacity: 100-year developed peak flow.
Metal Parts: corrosion resistant steel parts galvanized and asphalt coated.
Catch Basin: type 2 Min. 72" diameter

Baffle Wall: to be designed with concrete reinforcing as required.
Spill containment must be provided to temporarily detain oil or floatable pollutants in runoff due to accidental spill or illegal dumping.

Figure 3.19 Flow Restrictor (Weir)

Maintenance. Control structures and catch basins have a history of maintenance-related problems and it is imperative that a good maintenance program be established for their proper functioning. A typical problem is that sediment builds up inside the structure which blocks or restricts flow to the inlet. To prevent this problem these structures should be routinely cleaned out at least twice per year. Regular inspections of control structures should be conducted to detect the need for non-routine cleanout, especially if construction or land-disturbing activities are occurring in the contributing drainage area.

A 15-foot wide access road to the control structure should be installed for inspection and maintenance.

Table 3.5 provides maintenance recommendations for control structures and catch basins.

Table 3.5
Maintenance of Control Structures and Catchbasins

Maintenance Component	Defect	Condition When Maintenance is Needed	Results Expected When Maintenance is Performed
General	Trash and Debris (Includes Sediment)	Material exceeds 25% of sump depth or 1 foot below orifice plate.	Control structure orifice is not blocked. All trash and debris removed.
	Structural Damage	Structure is not securely attached to manhole wall.	Structure securely attached to wall and outlet pipe.
		Structure is not in upright position (allow up to 10% from plumb).	Structure in correct position.
		Connections to outlet pipe are not watertight and show signs of rust.	Connections to outlet pipe are water tight; structure repaired or replaced and works as designed.
		Any holes--other than designed holes--in the structure.	Structure has no holes other than designed holes.
Cleanout Gate	Damaged or Missing	Cleanout gate is not watertight or is missing.	Gate is watertight and works as designed.
		Gate cannot be moved up and down by one maintenance person.	Gate moves up and down easily and is watertight.
		Chain/rod leading to gate is missing or damaged.	Chain is in place and works as designed.
		Gate is rusted over 50% of its surface area.	Gate is repaired or replaced to meet design standards.
Orifice Plate	Damaged or Missing	Control device is not working properly due to missing, out of place, or bent orifice plate.	Plate is in place and works as designed.
	Obstructions	Any trash, debris, sediment, or vegetation blocking the plate.	Plate is free of all obstructions and works as designed.
Overflow Pipe	Obstructions	Any trash or debris blocking (or having the potential of blocking) the overflow pipe.	Pipe is free of all obstructions and works as designed.

Table 3.5 Maintenance of Control Structures and Catchbasins			
Maintenance Component	**Defect**	**Condition When Maintenance is Needed**	**Results Expected When Maintenance is Performed**
Manhole	See Table 3.4	See Table 3..4	See Table 3.4
CATCH BASINS			
General	Trash & Debris	Trash or debris which is located immediately in front of the catch basin opening or is blocking inletting capacity of the basin by more than 10%.	No Trash or debris located immediately in front of catch basin or on grate opening.
		Trash or debris (in the basin) that exceeds 60 percent of the sump depth as measured from the bottom of basin to invert of the lowest pipe into or out of the basin, but in no case less than a minimum of six inches clearance from the debris surface to the invert of the lowest pipe.	No trash or debris in the catch basin.
		Trash or debris in any inlet or outlet pipe blocking more than 1/3 of its height.	Inlet and outlet pipes free of trash or debris.
		Dead animals or vegetation that could generate odors that could cause complaints or dangerous gases (e.g., methane).	No dead animals or vegetation present within the catch basin.
	Sediment	Sediment (in the basin) that exceeds 60 percent of the sump depth as measured from the bottom of basin to invert of the lowest pipe into or out of the basin, but in no case less than a minimum of 6 inches clearance from the sediment surface to the invert of the lowest pipe. Measured from the bottom of basin to invert of the lowest pipe into or out of the basin.	No sediment in the catch basin
	Structure Damage to Frame and/or Top Slab	Top slab has holes larger than 2 square inches or cracks wider than 1/4 inch (Intent is to make sure no material is running into basin).	Top slab is free of holes and cracks.
		Frame not sitting flush on top slab, i.e., separation of more than 3/4 inch of the frame from the top slab. Frame not securely attached	Frame is sitting flush on the riser rings or top slab and firmly attached.
	Fractures or Cracks in Basin Walls/ Bottom	Maintenance person judges that structure is unsound.	Basin replaced or repaired to design standards.
		Grout fillet has separated or cracked wider than 1/2 inch and longer than 1 foot at the joint of any inlet/outlet pipe or any evidence of soil particles entering catch basin through cracks.	Pipe is regrouted and secure at basin wall.
	Settlement/ Misalignment	If failure of basin has created a safety, function, or design problem.	Basin replaced or repaired to design standards.
	Vegetation	Vegetation growing across and blocking more than 10% of the basin opening.	No vegetation blocking opening to basin.
		Vegetation growing in inlet/outlet pipe joints that is more than six inches tall and less than six inches apart.	No vegetation or root growth present.

Table 3.5 Maintenance of Control Structures and Catchbasins			
Maintenance Component	**Defect**	**Condition When Maintenance is Needed**	**Results Expected When Maintenance is Performed**
	Contamination and Pollution	See "Detention Ponds"	No pollution present.
Catch Basin Cover	Cover Not in Place	Cover is missing or only partially in place. Any open catch basin requires maintenance.	Catch basin cover is closed
	Locking Mechanism Not Working	Mechanism cannot be opened by one maintenance person with proper tools. Bolts into frame have less than 1/2 inch of thread.	Mechanism opens with proper tools.
	Cover Difficult to Remove	One maintenance person cannot remove lid after applying normal lifting pressure. (Intent is keep cover from sealing off access to maintenance.)	Cover can be removed by one maintenance person.
Ladder	Ladder Rungs Unsafe	Ladder is unsafe due to missing rungs, not securely attached to basin wall, misalignment, rust, cracks, or sharp edges.	Ladder meets design standards and allows maintenance person safe access.
Metal Grates (If Applicable)	Grate opening Unsafe	Grate with opening wider than 7/8 inch.	Grate opening meets design standards.
	Trash and Debris	Trash and debris that is blocking more than 20% of grate surface inletting capacity.	Grate free of trash and debris.
	Damaged or Missing.	Grate missing or broken member(s) of the grate.	Grate is in place and meets design standards.

Methods of Analysis

This section presents the methods and equations for design of **control structure restrictor devices.** Included are details for the design of orifices, rectangular sharp-crested weirs, v-notch weirs, sutro weirs, and overflow risers.

Orifices. Flow-through orifice plates in the standard tee section or turn-down elbow may be approximated by the general equation:

$$Q = C\,A\sqrt{2gh} \qquad \text{(equation 4)}$$

where
Q = flow (cfs)
C = coefficient of discharge (0.62 for plate orifice)
A = area of orifice (ft^2)
h = hydraulic head (ft)
g = gravity (32.2 ft/sec^2)

Figure 3.20 illustrates this simplified application of the orifice equation.

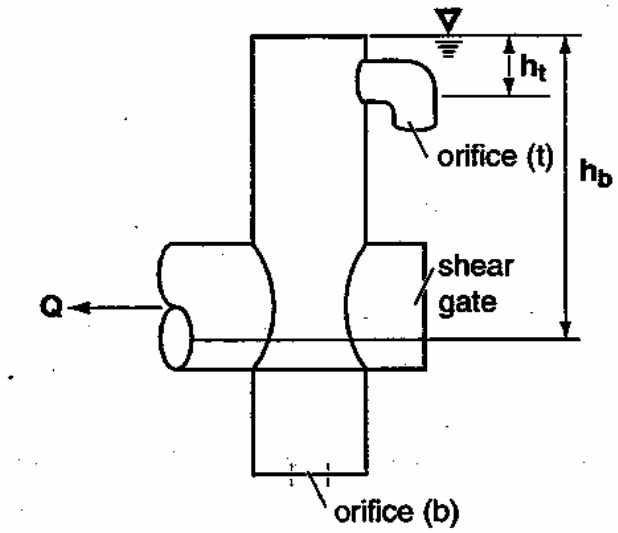

$$Q = CA_b\sqrt{2gh_b} + CA_t\sqrt{2gh_t}$$
$$= C\sqrt{2g}\left(A_b\sqrt{h_b} + A_t\sqrt{h_t}\right)$$

hb = distance from hydraulic grade line at the 2-year flow of the outflow pipe to the overflow elevation

Figure 3.20 Simple Orifice

The diameter of the orifice is calculated from the flow. The orifice equation is often useful when expressed as the orifice diameter in inches:

$$d = \sqrt{\frac{36.88Q}{\sqrt{h}}} \qquad \text{(equation 5)}$$

where d = orifice diameter (inches)
Q = flow (cfs)
h = hydraulic head (ft)

Rectangular Sharp-Crested Weir. The rectangular sharp-crested weir design shown in Figure 3.21 may be analyzed using standard weir equations for the fully contracted condition.

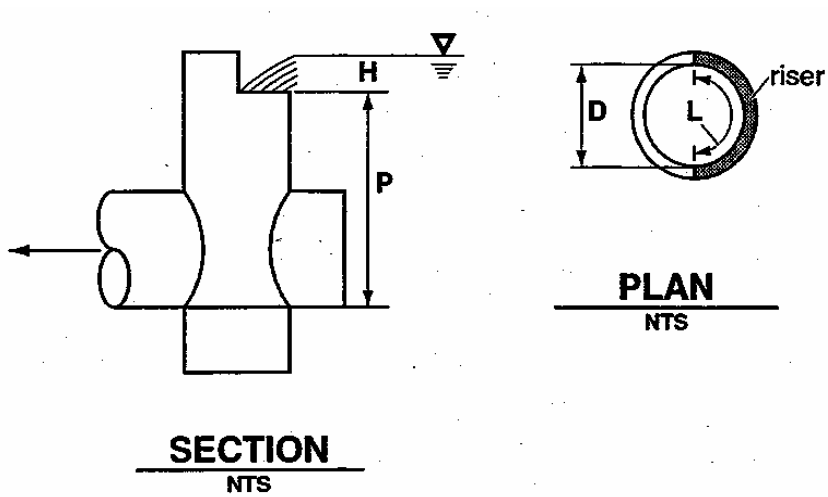

Figure 3.21 Rectangular, Sharp-Crested Weir

$Q=C\,(L - 0.2H)H^{3/2}$ (equation 6)

where Q = flow (cfs)

C = 3.27 + 0.40 H/P (ft)

H, P are as shown above

L = length (ft) of the portion of the riser circumference as necessary not to exceed 50 percent of the circumference

D = inside riser diameter (ft)

Note that this equation accounts for side contractions by subtracting 0.1H from L for each side of the notch weir.

V-Notch Sharp - Crested Weir

V-notch weirs as shown in Figure 3.22 may be analyzed using standard equations for the fully contracted condition.

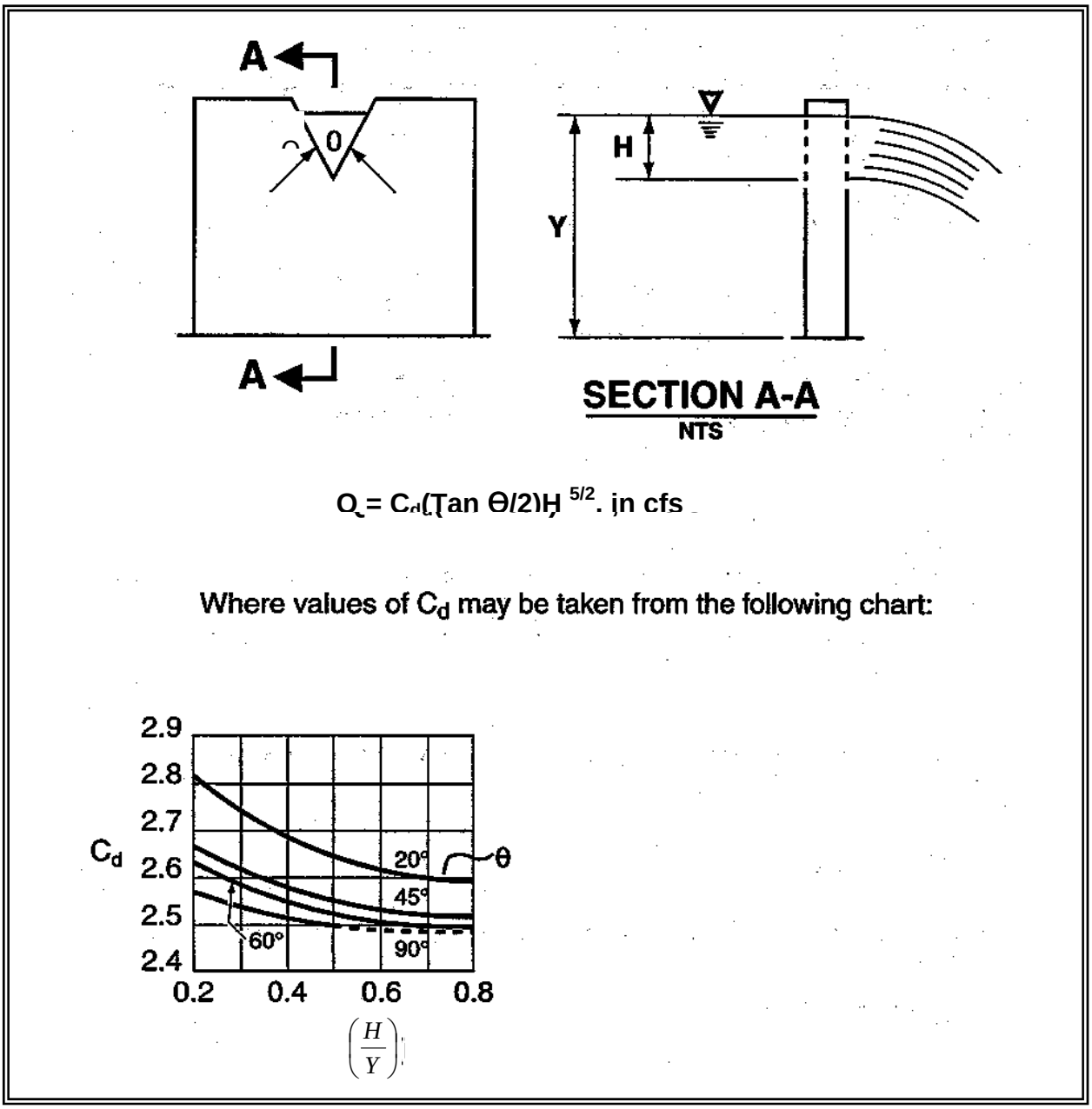

Figure 3.22 V-Notch, Sharp-Crested Weir

Proportional or Sutro Weir. Sutro weirs are designed so that the discharge is proportional to the total head. This design may be useful in some cases to meet performance requirements.

The sutro weir consists of a rectangular section joined to a curved portion that provides proportionality for all heads above the line A-B (see Figure 3.23). The weir may be symmetrical or non-symmetrical.

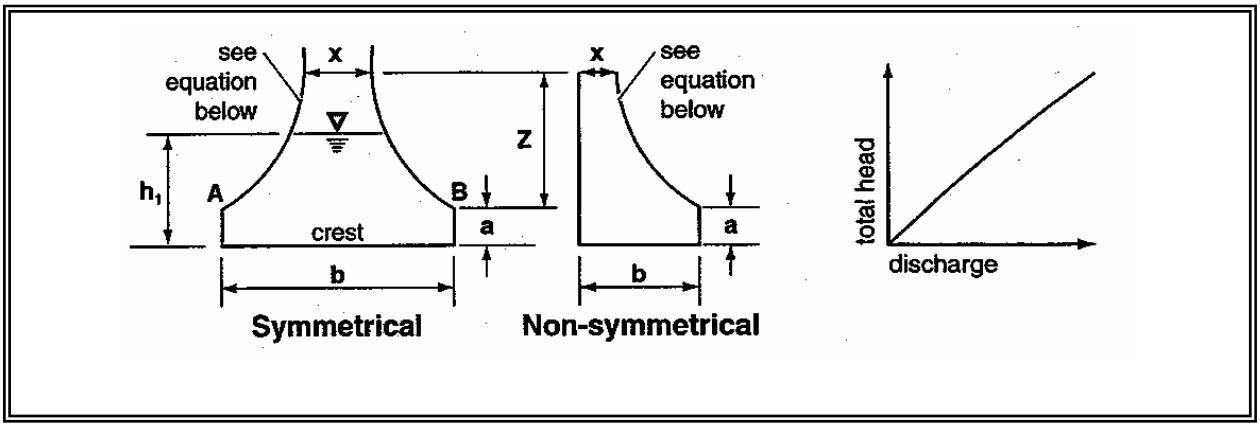

Figure 3.23 Sutro Weir

For this type of weir, the curved portion is defined by the following equation (calculated in radians):

$$\frac{x}{b} = 1 - \frac{2}{\pi} Tan^{-1} \sqrt{\frac{Z}{a}} \qquad \text{(equation 7)}$$

where a, b, x and Z are as shown in Figure 3.23. The head-discharge relationship is:

$$Q = C_d\, b \sqrt{2ga(h_1 - \frac{a}{3})} \qquad \text{(equation 8)}$$

Values of *Cd* for both symmetrical and non-symmetrical sutro weirs are summarized in Table 3.6.

Note: When b > 1.50 or a > 0.30, use Cd=0.6.

Table 3.6 Values of C_d for Sutro Weirs					
Cd *Values, Symmetrical*					
b (ft)					
a (ft)	**0.50**	**0.75**	**1.0**	**1.25**	**1.50**
0.02	0.608	0.613	0.617	0.6185	0.619
0.05	0.606	0.611	0.615	0.617	0.6175
0.10	0.603	0.608	0.612	0.6135	0.614
0.15	0.601	0.6055	0.610	0.6115	0.612
0.20	0.599	0.604	0.608	0.6095	0.610
0.25	0.598	0.6025	0.6065	0.608	0.6085
0.30	0.597	0.602	0.606	0.6075	0.608
***Cd* Values, Non-Symmetrical**					
***b* (ft)**					
a (ft)	**0.50**	**0.75**	**1.0**	**1.25**	**1.50**
0.02	0.614	0.619	0.623	0.6245	0.625
0.05	0.612	0.617	0.621	0.623	0.6235
0.10	0.609	0.614	0.618	0.6195	0.620
0.15	0.607	0.6115	0.616	0.6175	0.618
0.20	0.605	0.610	0.614	0.6155	0.616
0.25	0.604	0.6085	0.6125	0.614	0.6145
0.30	0.603	0.608	0.612	0.6135	0.614

Riser Overflow. The nomograph in Figure 3.24 can be used to determine the head (in feet) above a riser of given diameter and for a given flow (usually the 100-year peak flow for developed conditions).

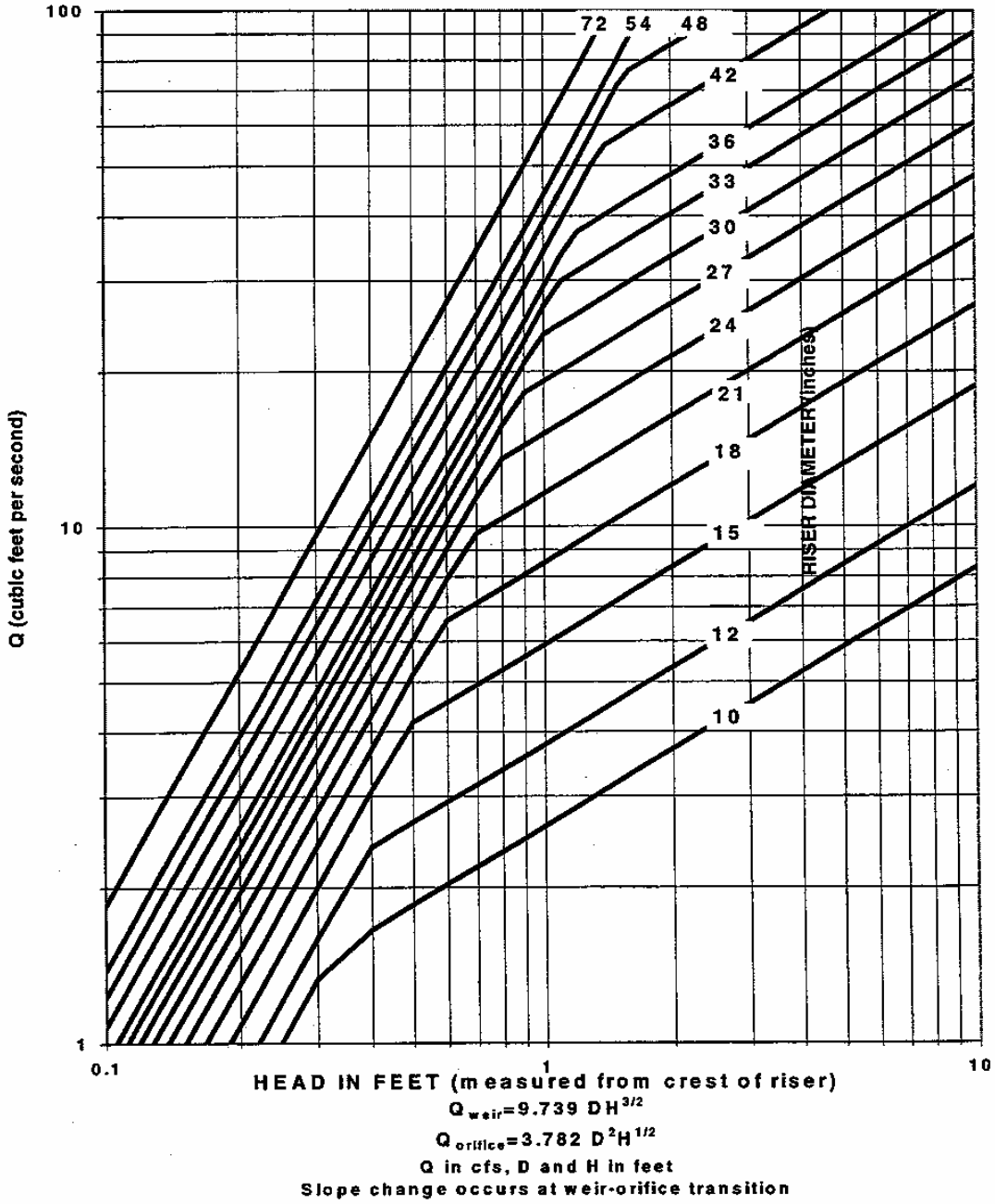

Figure 3.24 Riser Inflow Curves

3.2.5 Other Detention Options

This section presents other design options for detaining flows to meet flow control facility requirements.

Use of Parking Lots for Additional Detention. Private parking lots may be used to provide additional detention volume for runoff events greater than the 2-year runoff event provided all of the following are met:

1. The depth of water detained does not exceed 1 foot at any location in the parking lot for runoff events up to and including the 100-year event.

2. The gradient of the parking lot area subject to ponding is 1 percent or greater.

3. The emergency overflow path is identified and noted on the engineering plan. The overflow must not create a significant adverse impact to downhill properties or drainage system.

4. Fire lanes used for emergency equipment are free of ponding water for all runoff events up to and including the 100-year event.

Use of Roofs for Detention

Detention ponding on roofs of structures may be used to meet flow control requirements provided all of the following are met:

1. The roof support structure is analyzed by a structural engineer to address the weight of ponded water.

2. The roof area subject to ponding is sufficiently waterproofed to achieve a minimum service life of 30 years.

3. The minimum pitch of the roof area subject to ponding is 1/4-inch per foot.

4. An overflow system is included in the design to safely convey the 100-year peak flow from the roof

5. A mechanism is included in the design to allow the ponding area to be drained for maintenance purposes or in the event the restrictor device is plugged.

3.3 Infiltration Facilities for Flow Control and for Treatment

3.3.1 Purpose

To provide infiltration capacity for stormwater runoff quantity and flow control, and for water quality treatment.

3.3.2 Description

An infiltration BMP is typically an open basin (pond), trench, or buried perforated pipe used for distributing the stormwater runoff into the underlying soil (See Figure 3.25). Stormwater dry-wells receiving uncontaminated or properly treated stormwater can also be considered as infiltration facilities. (See Underground Injection Control Program, Chapter 173-218 WAC).

Coarser more permeable soils can be used for quantity control provided that the stormwater discharge does not cause a violation of ground water quality criteria. Typically, treatment for removal of TSS, oil, and/or soluble pollutants is necessary prior to conveyance to an infiltration BMP.

Use of the soil for treatment purposes is also an option as long as it is preceded by a pre-settling basin or a basic treatment BMP. This section highlights design criteria that are applicable to infiltration facilities serving a treatment function.

3.3.3 Applications

Infiltration facilities for flow control are used to convey stormwater runoff from new development or redevelopment to the ground and ground water after appropriate treatment. Infiltration facilities for treatment purposes rely on the soil profile to provide treatment. In either case, runoff in excess of the infiltration capacity of the facilities must be managed to comply with the flow control requirement in Volume I, if flow control applies to the project.

Infiltration facilities can help accomplish the following:

Ground water recharge

Discharge of uncontaminated or properly treated stormwater to dry-wells in compliance with Ecology's UIC regulations (Chapter 173-218 WAC)

Retrofits in limited land areas: Infiltration trenches can be considered for residential lots, commercial areas, parking lots, and open space areas.

Flood control

Streambank erosion control

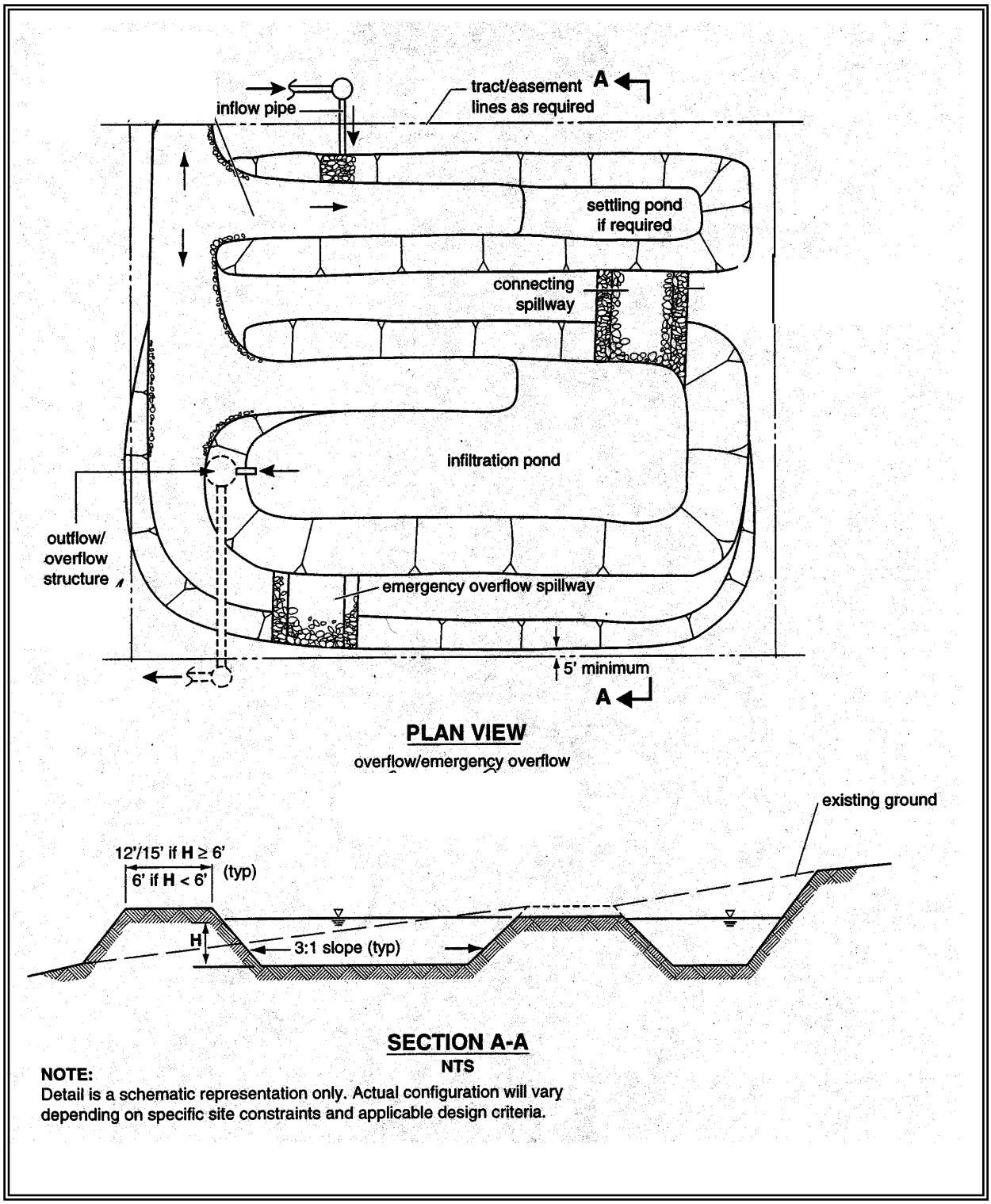

Figure 3.25 Typical Infiltration Pond/Basin

3.3.4 Simplified Approach (Figure 3.26)

The simplified approach was derived from high ground water and shallow pond sites in western Washington, and in general will produce `conservative designs. The simplified approach can be used when determining the trial geometry of the infiltration facility, for small or low impact facilities, or for facilities where a more conservative design is acceptable. The simplified approach is applicable to ponds and trenches and includes the following steps:

1. Select a location:

This will be based on the ability to convey flow to the location and the expected soil conditions of the location. Conduct a preliminary surface and sub-surface characterization study (Section 3.3.5). Do a preliminary check of Site Suitability Criteria (Section 3.3.7) to initial estimate feasibility..

2. Estimate volume of stormwater, Vdesign:

For western Washington, a continuous hydrograph should be used, requiring use of an approved continuous runoff model such as WWHM, MGSFlood, or KCRTS for the calculations. The runoff file developed for the project site serves as input to the infiltration basin.

For infiltration basins sized simply to meet treatment requirements, the basin must successfully infiltrate 91% of the influent runoff file. The remaining 9% of the influent file can bypass the infiltration facility. However, if the bypass discharges to a surface water that is not exempt from flow control, the bypass must meet the flow control standard.

For infiltration basins sized to meet the flow control standard, the basin must infiltrate either all of the influent file, or a sufficient amount of the influent file such that any overflow/bypass meets the flow duration standard.

3. Develop trial infiltration facility geometry:

To accomplish this, an infiltration rate will need to be assumed based on previously available data, or a default infiltration rate of 0.5 inches/hour can be used. This trial facility geometry should be used to help locate the facility and for planning purposes in developing the geotechnical subsurface investigation plan.

4. Complete More Detailed Site Characterization Study and Consider Site Suitability Criteria:

Information gathered during initial geotechnical and surface investigations are necessary to know whether infiltration is feasible. The geotechnical investigation evaluates the suitability of the site for infiltration, establishes the infiltration rate for design, and evaluates slope stability, foundation capacity, and other geotechnical design information needed to design and assess constructability of the facility.

See sections 3.3.5 and 3.3.7.

5. Determine the infiltration rate as follows:

Three possible methods for estimating the long-term infiltration rate are provided in Section 3.3.6.

6. Size the facility:

Ensure that the maximum pond depth stays below the minimum required freeboard. If sizing a treatment facility, document that the 91st percentile, 24-hour runoff volume (indicated by WWHM or MGS Flood) can infiltrate through the infiltration basin surface within 48 hours. This can be calculated by multiplying a horizontal projection of the infiltration basin mid-depth dimensions by the estimated long-term infiltration rate; and multiplying the result by 48 hours.

7. Construct the facility:

Maintain and monitor the facility for performance

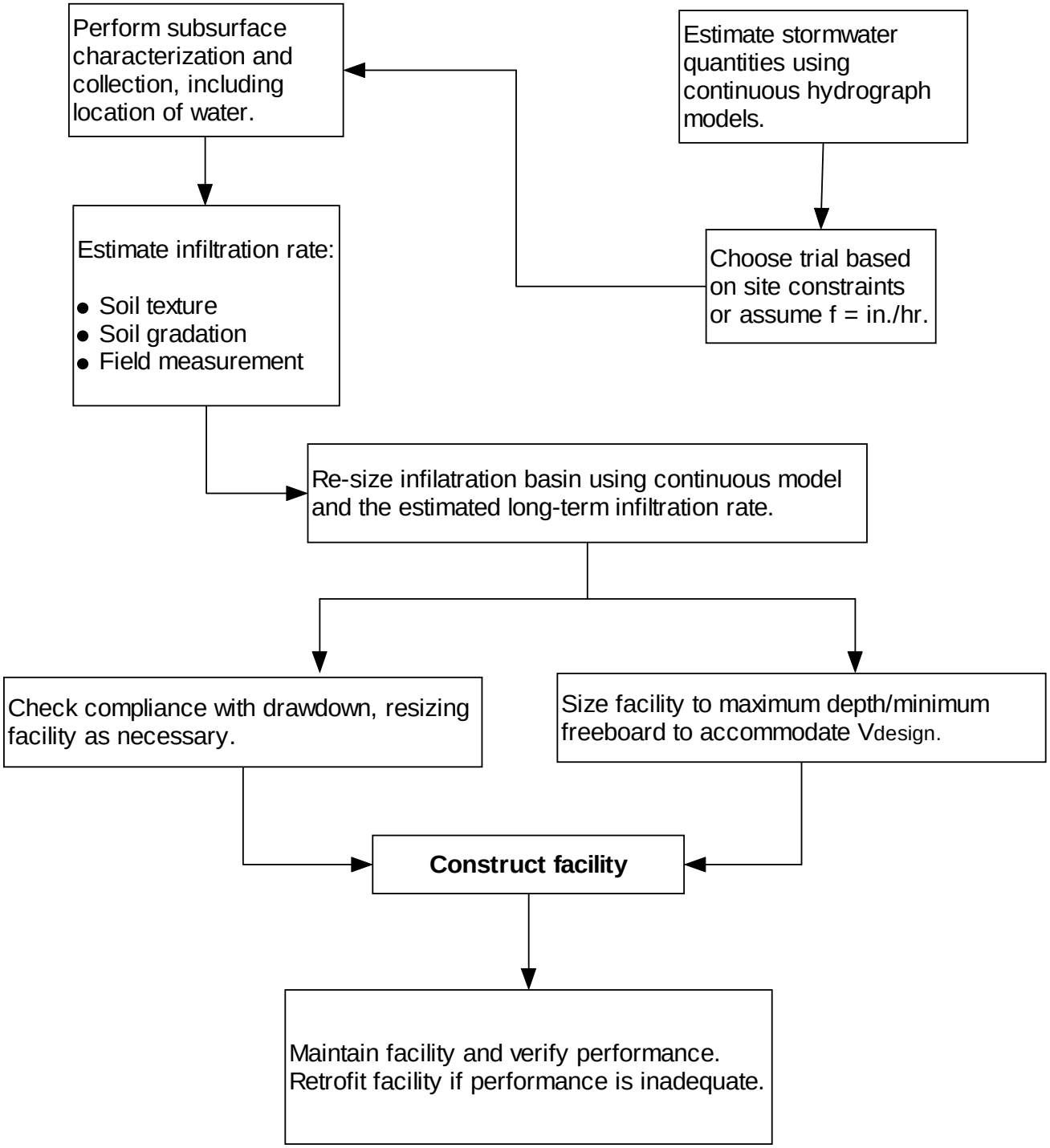

Figure 3.26 Steps for Design of Infiltration Facilities – Simplified Approach

3.3.5 Site Characterization Criteria

One of the first steps in siting and designing infiltration facilities is to conduct a characterization study that includes the following:

Note: Information gathered during initial geotechnical investigations can be used for the site characterization.

Surface Features Characterization:

1. Topography within 500 feet of the proposed facility.

2. Anticipated site use (street/highway, residential, commercial, high-use site).

3. Location of water supply wells within 500 feet of proposed facility.

4. Location of ground water protection areas and/or 1, 5 and 10 year time of travel zones for municipal well protection areas.

5. A description of local site geology, including soil or rock units likely to be encountered, the groundwater regime, and geologic history of the site.

Subsurface Characterization:

1. Subsurface explorations (test holes or test pits) to a depth below the base of the infiltration facility of at least 5 times the maximum design depth of ponded water proposed for the infiltration facility,

2. Continuous sampling (representative samples from each soil type and/or unit within the infiltration receptor) to a depth below the base of the infiltration facility of 2.5 times the maximum design ponded water depth, but not less than 6 feet.

   - For basins, at least one test pit or test hole per 5,000 ft^2 of basin infiltrating surface (in no case less than two per basin).

   - For trenches, at least one test pit or test hole per 50 feet of trench length (in no case less than two per trench).

Note: The depth and number of test holes or test pits, and samples should be increased, if in the judgment of a licensed engineer with geotechnical expertise (P.E.), a licensed geologist, engineering geologist, hydrogeologist, or other licensed professional acceptable to the local jurisdiction, the conditions are highly variable and such increases are necessary to accurately estimate the performance of the infiltration system. The exploration program may also be decreased if, in the opinion of the licensed engineer or other professional, the conditions are relatively

uniform and the borings/test pits omitted will not influence the design or successful operation of the facility. In high water table sites, the subsurface exploration sampling need not be conducted lower than two (2) feet below the ground water table.

3. Prepare detailed logs for each test pit or test hole and a map showing the location of the test pits or test holes. Logs must include at a minimum, depth of pit or hole, soil descriptions, depth to water, presence of stratification *(note: Logs must substantiate whether stratification does or does not exist. The licensed professional may consider additional methods of analysis to substantiate the presence of stratification that will significantly impact the design of the infiltration facility).*

Infiltration Rate Determination:

Determine the representative infiltration rate of the unsaturated vadose zone based on infiltration tests and/or grain-size distribution/texture (see next section). Determine site infiltration rates using the Pilot Infiltration Test (PIT) described in Appendix III-D, if practicable. Such site testing should be considered to verify infiltration rate estimates based on soil size distribution and textural analysis. Infiltration rates may also be estimated based on soil grain-size distributions from test pits or test hole samples (particularly where a sufficient source of water does not exist to conduct a pilot infiltration test). As a minimum, one soil grain-size analysis per soil stratum in each test hole shall be performed within 2.5 times the maximum design water depth, but not less than 6 feet.

Soil Testing:

Soil characterization for each soil unit (soils of the same texture, color, density, compaction, consolidation and permeability) encountered should include:

- Grain-size distribution (ASTM D422 or equivalent AASHTO specification)
- Textural class (USDA) (See Figure 3.27)
- Percent clay content (include type of clay, if known)
- Color/mottling
- Variations and nature of stratification

If the infiltration facility will be used to provide treatment as well as flow control, the soil characterization should also include:

- Cation exchange capacity (CEC) and organic matter content for each soil type and strata. Where distinct changes in soil properties occur, to a depth below the base of the facility of at least 2.5 times the maximum design water depth, but not less than 6 feet. Consider if soils are already contaminated, thus diminishing pollutant sorptive capacity.

- For soils with low CEC and organic content, deeper characterization of soils may be warranted (refer to Section 3.3.7 Site Suitability Criteria)

Infiltration Receptor:

Infiltration receptor (unsaturated and saturated soil receiving the stormwater) characterization should include:

1. Installation of ground water monitoring wells (at least three per infiltration facility, or three hydraulically connected surface and ground water features that will establish a three-dimensional relationship for the ground water table, unless the highest ground water level is known to be at least 50 feet below the proposed infiltration facility) to:

    - monitor the seasonal ground water levels at the site during at least one wet season, and,

    - consider the potential for both unconfined and confined aquifers, or confining units, at the site that may influence the proposed infiltration facility as well as the groundwater gradient. Other approaches to determine ground water levels at the proposed site could be considered if pre-approved by the local government jurisdiction, and,

    - determine the ambient ground water quality, if that is a concern.

2. An estimate of the volumetric water holding capacity of the infiltration receptor soil. This is the soil layer below the infiltration facility and above the seasonal high-water mark, bedrock, hardpan, or other low permeability layer. This analysis should be conducted at a conservatively high infiltration rate based on vadose zone porosity, and the water quality runoff volume to be infiltrated. This, along with an analysis of ground water movement, will be useful in determining if there are volumetric limitations that would adversely affect drawdown.

3. Determination of:

    - Depth to ground water table and to bedrock/impermeable layers

- Seasonal variation of ground water table based on well water levels and observed mottling

- Existing ground water flow direction and gradient

- Lateral extent of infiltration receptor

- Horizontal hydraulic conductivity of the saturated zone to assess the aquifer's ability to laterally transport the infiltrated water.

- Impact of the infiltration rate and volume at the project site on ground water mounding, flow direction, and water table; and the discharge point or area of the infiltrating water. A ground water mounding analysis should be conducted at all sites where the depth to seasonal ground water table or low permeability stratum is less than 15 feet and the runoff to the infiltration facility is from more than one acre. *(The site professional can consider conducting an aquifer test, or slug test and the type of ground water mounding analysis necessary at the site)*

Note: A detailed soils and hydrogeologic investigation should be conducted if potential pollutant impacts to ground water are a concern, or if the applicant is proposing to infiltrate in areas underlain by till or other impermeable layers. (Suggested references: "Implementation Guidance for the Ground Water Quality Standards", Department of Ecology, publication 96-2, 1996, and, "Washington State Water Quality Guide," Natural Resources Conservation Service, W. 316 Boone Ave, Spokane WA 99201-2348).

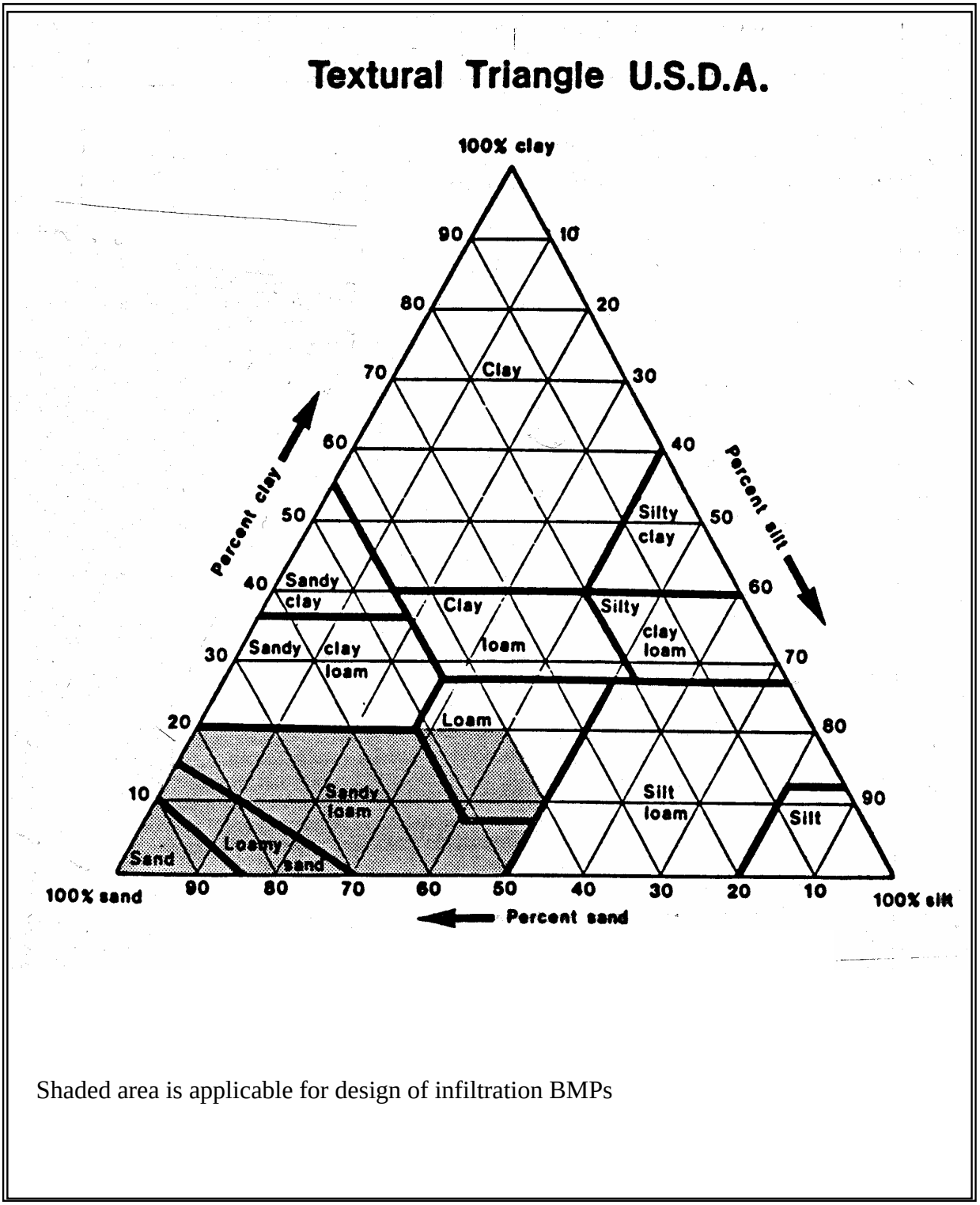

Shaded area is applicable for design of infiltration BMPs

Figure 3.27 USDA Textural Triangle

Source: U.S. Department of Agriculture

3.3.6 Design Infiltration Rate Determination – Guidelines and Criteria

Infiltration rates can be determined using either a correlation to grain size distribution from soil samples, textural analysis, or by in-situ field measurements. Short-term infiltration rates up to 2.4 in./hr represent soils that typically have sufficient treatment properties. Long-term infiltration rates are used for sizing the infiltration pond based on maximum pond level and drawdown time. Long-term infiltration rates up to 2.0 inches per hour can also be considered for treatment if SSC-4 and SSC-6 are met, as defined in Section 3.3.7.

Historically, infiltration rates have been estimated from soil grain size distribution (gradation) data using the United States Department of Agriculture (USDA) textural analysis approach. To use the USDA textural analysis approach, the grain size distribution test must be conducted in accordance with the USDA test procedure (SOIL SURVEY MANUAL, U.S. Department of Agriculture, October 1993, page 136). This manual only considers soil passing the #10 sieve (2 mm) (U.S. Standard) to determine percentages of sand, silt, and clay for use in Figure 3.27 (USDA Textural Triangle). However, many soil test laboratories use the ASTM soil size distribution test procedure (ASTM D422), which considers the full range of soil particle sizes, to develop soil size distribution curves. The ASTM soil gradation procedure must not be used with Figure 3.27 to perform USDA soil textural analyses.

Three Methods for Determining Long-term Infiltration Rates for Sizing Infiltration Facilities

For designing the infiltration facility the site professional should select one of the three methods described below that will best represent the long-term infiltration rate at the site. The long-term infiltration rate should be used for routing and sizing the basin/trench for the maximum drawdown time of 48 hours. If the pilot infiltration test (table 3.9) or hindcast approach (table 3.8) is selected corroboration with a textural based infiltration rate (table 3.7) is also desirable. Appropriate correction factors must be applied as specified. Verification testing of the completed facility is strongly encouraged. (See Site Suitability Criterion # 7-Verification Testing)

<u>1. USDA Soil Textural Classification</u>

Table 3.7 provides the correlation between USDA soil texture and infiltration rates for estimating infiltration rates for homogeneous soils based on gradations from soil samples and textural analysis. The USDA soil texture – infiltration rate correlation in Table 3.7 is based on the correlation developed by Rawls, et. al. (1982), but with minor changes in the infiltration rates based on WEF/ASCE (1998). The infiltration rates provided through this correlation represent short-term conservative rates

for homogeneous soils. These rates not consider the effects of site variability and long-term clogging due to siltation and biomass buildup in the infiltration facility.

Table 3.7 -- Recommended Infiltration Rates based on USDA Soil Textural Classification.

	*Short-Term Infiltration Rate (in./hr)	Correction Factor, CF	Estimated Long-Term (Design) Infiltration Rate (in./hr)
Clean sandy gravels and gravelly sands (i.e., 90% of the total soil sample is retained in the #10 sieve)	20	2	10**
Sand	8	4	2***
Loamy Sand	2	4	0.5
Sandy Loam	1	4	0.25
Loam	0.5	4	0.13

*From WEF/ASCE, 1998.
**Not recommended for treatment
*** Refer to SSC-4 and SSC-6 for treatment acceptability criteria

Based on experience with long-term full-scale infiltration pond performance, Ecology's Technical Advisory Committee (TAC) recommends that the short-term infiltration rates be reduced as shown in Table 3.7, dividing by a correction factor of 2 to 4, depending on the soil textural classification. The correction factors provided in Table 3.7 represent an average degree of long-term facility maintenance, TSS reduction through pretreatment, and site variability in the subsurface conditions. These conditions might include deposits of ancient landslide debris, buried stream channels, lateral grain size variability, and other factors that affect homogeneity).

These correction factors could be reduced, subject to the approval of the local jurisdiction, under the following conditions:

- For sites with little soil variability,
- Where there will be a high degree of long-term facility maintenance,
- Where specific, reliable pretreatment is employed to reduce TSS entering the infiltration facility

In no case shall a correction factor less than 2.0 be used.

Correction factors higher than those provided in Table 3.7 should be considered for situations where long-term maintenance will be difficult to implement, where little or no pretreatment is anticipated, or where site conditions are highly variable or uncertain. These situations require the use of best professional judgment by the site engineer and the approval of the local jurisdiction. An Operation and Maintenance plan and a financial bonding plan may be required by the local jurisdiction.

2. ASTM Gradation Testing at Full Scale Infiltration Facilities

As an alternative to Table 3.7, recent studies by Massmann and Butchart (2000) were used to develop the correlation provided in Table 3.8. These studies compare infiltration measurements from full-scale infiltration facilities to soil gradation data developed using the ASTM procedure (ASTM D422). The primary source of the data used by Massmann and Butchart was from Wiltsie (1998), who included limited infiltration studies only on Thurston County sites. However, Massmann and Butchart also included limited data from King and Clark County sites in their analysis. This table provides recommended long-term infiltration rates that have been correlated to soil gradation parameters using the ASTM soil gradation procedure.

Table 3.8 can be used to estimate long-term design infiltration rates directly from soil gradation data, subject to the approval of the local jurisdiction. As is true of Table 3.7, the long-term rates provided in Table 3.8 represent average conditions regarding site variability, the degree of long-term maintenance and pretreatment for TSS control. The long-term infiltration rates in Table 3.8 may need to be decreased if the site is highly variable, or if maintenance and influent characteristics are not well controlled. The data that forms the basis for Table 3.8 was from soils that would be classified as sands or sandy gravels. No data was available for finer soils at the time the table was developed. Therefore, Table 3.8 should not be used for soils with a d_{10} size (10% passing the size listed) less than 0.05 mm (U.S. Standard Sieve).

Table 3.8 -- Alternative Recommended Infiltration Rates based on ASTM Gradation Testing.

D_{10} Size from ASTM D422 Soil Gradation Test (mm)	Estimated Long-Term (Design) Infiltration Rate (in./hr)
$\geq$ 0.4	9*
0.3	6.5*
0.2	3.5*
0.1	2.0**
0.05	0.8

* Not recommended for treatment
* Refer to SSC-4 and SSC-6 for treatment acceptability criteria

However, additional data based on recent research (Massmann, et al. 2003) for these finer soils are now available and are shown in Figure 3.28.

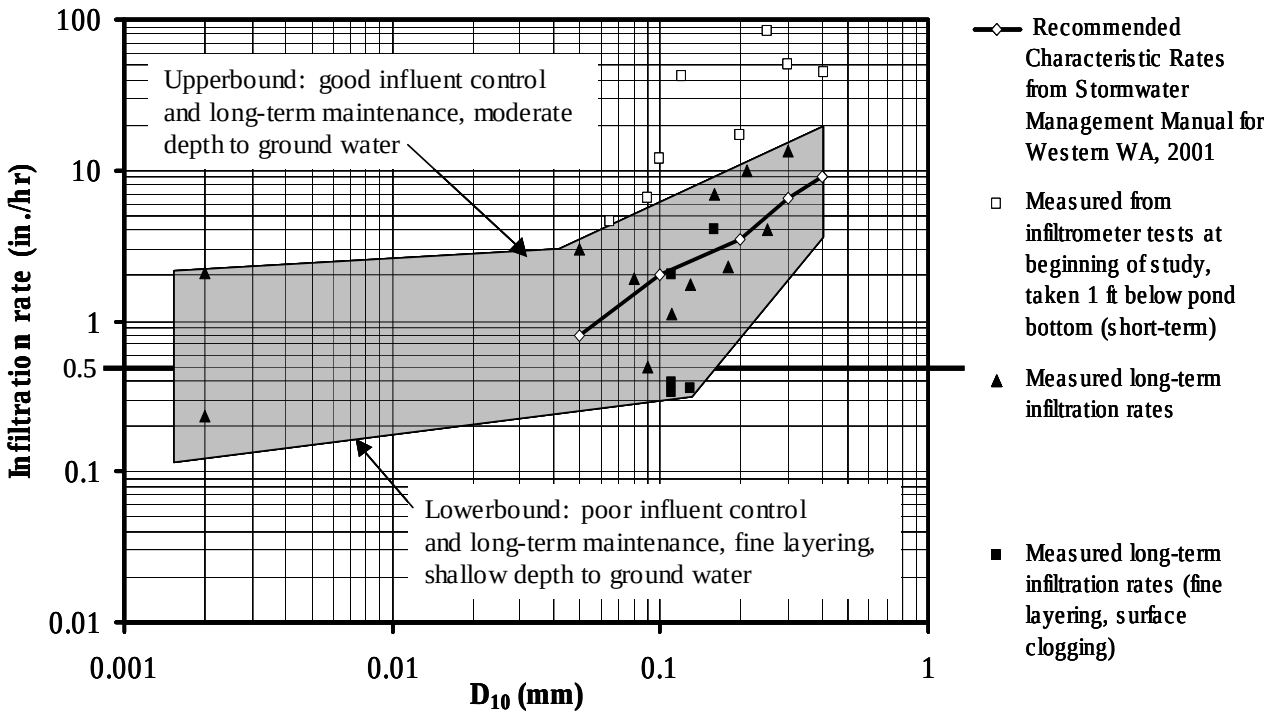

Figure 3.28 – Infiltration Rate as a Function of the D10 Size of the Soil for Ponds in Western Washington

(the mean values represent low gradient conditions and relatively shallow ponds)

Figure 3.28 provides a plot of this relationship between the infiltration rate and the d10 of the soil, showing the empirical data upon which it is based. The figure provides an upper and lower bound range for this relationship based on the empirical data. These upper and lower bound ranges can be used to adjust the design infiltration rate to account for site-specific issues and conditions.

The long-term rates provided in Table 3.8 represent average conditions regarding site variability, the degree of long-term maintenance, and pretreatment for TSS control, and represent a moderate depth to ground water below the pond. The long-term infiltration rates in Table 3.8 may need to be decreased (i.e., toward the lower bound in Figure 3.28) if the site is highly variable, the ground water table is shallow, there is fine layering present that would not be captured by the soil gradation testing, or maintenance and influent characteristics are not well controlled. However, if influent control is good (e.g., water entering the pond is pretreated through a biofiltration swale, pre-sedimentation pond, etc.), a good long-term maintenance plan will be implemented, and the water table is moderate in depth, then an infiltration rate toward the upper bound in the figure could be used.

The infiltration rates provided in Tables 3.7, 3.8, and Figure 3.28 represent rates for homogeneous soil conditions. If more than one soil unit is encountered within 6 feet of the base of the facility or 2.5 times the proposed maximum water design depth, use the lowest infiltration rate determined from each of the soil units as the representative site infiltration rate.

If soil mottling, fine silt or clay layers, which cannot be fully represented in the soil gradation tests, are present below the bottom of the infiltration pond, the infiltration rates provided in the tables will be too high and should be reduced. Based on limited full-scale infiltration data (Massmann and Butchart, 2000; Wiltsie, 1998), it appears that the presence of mottling indicates soil conditions that reduce the infiltration rate for homogeneous conditions by a factor of 3 to 4.

The rates shown in Table 3.8 and Figure 3.28 are long-term design rates. No additional correction factor is needed.

3. In-situ Infiltration Measurements

Where feasible, Ecology encourages in-situ infiltration measurements, using a procedure such as the Pilot Infiltration Test (PIT) described in Appendix III-D. Small-scale infiltration tests such as the EPA Falling Head or double ring infiltrometer test (ASTM D3385-88) are not recommended unless modified versions are determined to be acceptable by Ecology or the local jurisdiction. These small-scale infiltration tests

tend to seriously overestimate infiltration rates and, based on recent TAC experience, are considered unreliable.

The infiltration rate obtained from the PIT test shall be considered to be a short-term rate. This short-term rate must be reduced through correction factors to account for site variability and number of tests conducted, degree of long-term maintenance and influent pretreatment/control, and potential for long-term clogging due to siltation and bio-buildup.

The typical range of correction factors to account for these issues, based on TAC experience, is summarized in Table 3.9. The range of correction factors is for general guidance only. The specific correction factors used shall be determined based on the professional judgment of the licensed engineer or other site professional considering all issues which may affect the long-term infiltration rate, subject to the approval of the local jurisdictional authority**.**

Table 3.9 Correction Factors to be Used With In-Situ Infiltration Measurements to Estimate Long-Term Design Infiltration Rates.

Issue	Partial Correction Factor
Site variability and number of locations tested	CF_v = 1.5 to 6
Degree of long-term maintenance to prevent siltation and bio-buildup	CF_m = 2 to 6
Degree of influent control to prevent siltation and bio-buildup	CF_i = 2 to 6

Total Correction Factor (CF) = $CF_v + CF_m + CF_i$

The following discussions are to provide assistance in determining the partial correction factors to apply in Table 3.9.

Site variability and number of locations tested - The number of locations tested must be capable of producing a picture of the subsurface conditions that fully represents the conditions throughout the facility site. The partial correction factor used for this issue depends on the level of uncertainty that adverse subsurface conditions may occur. If the range of uncertainty is low - for example, conditions are known to be uniform through previous exploration and site geological factors - one pilot infiltration test may be adequate to justify a partial correction factor at the low end of the range. If the level of uncertainty is high, a partial correction factor near the high end of the range may be appropriate. This might be the case where the site conditions are highly variable due to a deposit of ancient landslide debris, or buried stream channels. In these cases, even with many explorations and several pilot infiltration tests, the level of uncertainty may still be high. A partial correction factor near the high end of the range could be assigned where conditions have a more typical variability, but few explorations and only one pilot infiltration test

is conducted. That is, the number of explorations and tests conducted do not match the degree of site variability anticipated.

Degree of long-term maintenance to prevent siltation and bio-buildup The standard of comparison here is the long-term maintenance requirements provided in Volume V, Chapter 4, and any additional requirements by local jurisdictional authorities. Full compliance with these requirements would be justification to use a partial correction factor at the low end of the range. If there is a high degree of uncertainty that long-term maintenance will be carried out consistently, or if the maintenance plan is poorly defined, a partial correction factor near the high end of the range may be justified.

Degree of influent control to prevent siltation and bio-buildup - A partial correction factor near the high end of the range may be justified under the following circumstances:

1. If the infiltration facility is located in a shady area where moss buildup or litter fall buildup from the surrounding vegetation is likely and cannot be easily controlled through long-term maintenance

2. If there is minimal pre-treatment, and the influent is likely to contain moderately high TSS levels.

If influent into the facility can be well controlled such that the planned long-term maintenance can easily control siltation and biomass buildup, then a partial correction factor near the low end of the range may be justified.

The determination of long-term design infiltration rates from in-situ infiltration test data involves a considerable amount of engineering judgment. Therefore, when reviewing or determining the final long-term design infiltration rate, the local jurisdictional authority should consider the results of both textural analyses and in-situ infiltration tests results when available.

3.3.7 Site Suitability Criteria (SSC)

This section provides criteria that must be considered for siting infiltration systems. When a site investigation reveals that any of the applicable criteria cannot be met appropriate mitigation measures must be implemented so that the infiltration facility will not pose a threat to safety, health, and the environment.

For site selection and design decisions a geotechnical and hydrogeologic report should be prepared by a qualified engineer with geotechnical and

hydrogeologic experience, or a licensed geologist, hydrogeologist, or engineering geologist. The design engineer may utilize a team of certified or registered professionals in soil science, hydrogeology, geology, and other related fields.

SSC-1 Setback Criteria

Setback requirements are generally required by local regulations, uniform building code requirements, or other state regulations.

These Setback Criteria are provided as guidance.

- Stormwater infiltration facilities should be set back at least 100 feet from drinking water wells, septic tanks or drainfields, and springs used for public drinking water supplies. Infiltration facilities upgradient of drinking water supplies and within 1, 5, and 10-year time of travel zones must comply with Health Dept. requirements (Washington Wellhead Protection Program, DOH, 12/93).
- Additional setbacks must be considered if roadway deicers or herbicides are likely to be present in the influent to the infiltration system
- From building foundations; ≥ 20 feet downslope and ≥100 feet upslope
- From a Native Growth Protection Easement (NGPE); ≥20 feet
- From the top of slopes >15%; ≥ 50 feet.
- Evaluate on-site and off-site structural stability due to extended subgrade saturation and/or head loading of the permeable layer, including the potential impacts to downgradient properties, especially on hills with known side-hill seeps.

SSC-2 Ground Water Protection Areas

A site is not suitable if the infiltration facility will cause a violation of Ecology's Ground Water Quality Standards (See SSC-9 for verification testing guidance). Local jurisdictions should be consulted for applicable pollutant removal requirements upstream of the infiltration facility, and to determine whether the site is located in an aquifer sensitive area, sole source aquifer, or a wellhead protection zone.

SSC-3 High Vehicle Traffic Areas

An infiltration BMP may be considered for runoff from areas of industrial activity and the high vehicle traffic areas described below. For such applications sufficient pollutant removal (including oil removal) must be provided upstream of the infiltration facility to ensure that ground water

quality standards will not be violated and that the infiltration facility is not adversely affected.

High Vehicle Traffic Areas are:

Commercial or industrial sites subject to an expected average daily traffic count (ADT) ≥100 vehicles/1,000 ft² gross building area (trip generation), and

Road intersections with an ADT of ≥ 25,000 on the main roadway, or ≥ 15,000 on any intersecting roadway.

SSC-4 Soil Infiltration Rate/Drawdown Time

Infiltration Rates: short-term and long-term:

For infiltration facilities used for treatment purposes, the short-term soil infiltration rate should be 2.4 in./hour, or less, to a depth of 2.5 times the maximum design pond water depth, or a minimum of 6 ft. below the base of the infiltration facility. This infiltration rate is also typical for soil textures that possess sufficient physical and chemical properties for adequate treatment, particularly for soluble pollutant removal (see SSC-6). It is comparable to the textures represented by Hydrologic Groups B and C. Long-term infiltration rates up to 2.0 inches/hour can also be considered, if the infiltration receptor is not a sole-source aquifer, and in the judgment of the site professional, the treatment soil has characteristics comparable to those specified in SSC-6 to adequately control the target pollutants.

The long-term infiltration rate should also be used for maximum drawdown time and routing calculations.

Drawdown time:

For infiltration facilities designed strictly for flow control purposes, there isn't a maximum drawdown time. If sizing a treatment facility, document that the 91st percentile, 24-hour runoff volume (indicated by WWHM or MGS Flood) can infiltrate through the infiltration basin surface within 48 hours. This can be calculated using a horizontal projection of the infiltration basin mid-depth dimensions and the estimated long-term infiltration rate.

This drawdown restriction is intended to meet the following objectives:

- aerate vegetation and soil to keep the vegetation healthy
- enhance the biodegradation of pollutants and organics in the soil.

SSC-5 Depth to Bedrock, Water Table, or Impermeable Layer

The base of all infiltration basins or trench systems shall be ≥ 5 feet above the seasonal high-water mark, bedrock (or hardpan) or other low permeability layer. A separation down to 3 feet may be considered if the ground water mounding analysis, volumetric receptor capacity, and the design of the overflow and/or bypass structures are judged by the site professional to be adequate to prevent overtopping and meet the site suitability criteria specified in this section.

SSC-6 Soil Physical and Chemical Suitability for Treatment

(Applies to infiltration facilities used as treatment facilities not to facilities used for flow control)

The soil texture and design infiltration rates should be considered along with the physical and chemical characteristics specified below to determine if the soil is adequate for removing the target pollutants. The following soil properties must be carefully considered in making such a determination:

- Cation exchange capacity (CEC) of the treatment soil must be ≥5 milliequivalents CEC/100 g dry soil (USEPA Method 9081). *Consider empirical testing of soil sorption capacity, if practicable*. Ensure that soil CEC is sufficient for expected pollutant loadings, particularly heavy metals. CEC values of >5 meq/100g are expected in loamy sands, according to Rawls, et al. Lower CEC content may be considered if it is based on a soil loading capacity determination for the target pollutants that is accepted by the local jurisdiction.
- Depth of soil used for infiltration treatment must be a minimum of 18 inches.
- Organic Content of the treatment soil (ASTM D 2974): Organic matter can increase the sorptive capacity of the soil for some pollutants. The site professional should evaluate whether the organic matter content is sufficient for control of the target pollutant(s).
- Waste fill materials should not be used as infiltration soil media nor should such media be placed over uncontrolled or non-engineered fill soils.
- Engineered soils may be used to meet the design criteria in this chapter and the performance goals in Chapters 3 and 4 of Volume V. Field performance evaluation(s), using acceptable protocols, would be needed to determine feasibility and acceptability by the local jurisdiction. See also Chapter 12 of Volume V.

SSC-7 Seepage Analysis and Control

Determine whether there would be any adverse effects caused by seepage zones on nearby building foundations, basements, roads, parking lots or sloping sites.

SSC-8 Cold Climate and Impact of Roadway Deicers

- For cold climate design criteria (snowmelt/ice impacts) refer to D. Caraco and R. Claytor reference.
- Potential impact of roadway deicers on potable water wells must be considered in the siting determination. Mitigation measures must be implemented if infiltration of roadway deicers can cause a violation of ground water quality standards.

SSC 9-Verification Testing of the Completed Facility

Verification testing of the completed full-scale infiltration facility is recommended to confirm that the design infiltration parameters are adequate. The site professional should determine the duration and frequency of the verification testing program including the monitoring program for the potentially impacted ground water. The ground water monitoring wells installed during site characterization (See Section 3.3.5) may be used for this purpose. Long-term (more than two years) in-situ drawdown and confirmatory monitoring of the infiltration facility would be preferable (See King County reference).

3.3.8 Detailed Approach (Figure 3.29)

This detailed approach was obtained from Massmann (2003). Procedures for the detailed approach are as follows:

1. Select a location:

This will be based on the ability to convey flow to the location and the expected soil conditions. The minimum setback distances must also be met. See Section 3.3.7 Site Suitability Criteria and setback distances.

2. Estimate volume of stormwater, V_{design}:

A continuous hydrograph should be used, requiring a model such as the WWHM, KCRTS, or MGSFlood to perform the calculations.

3. Develop a trial infiltration facility geometry based on length, width, and depth:

To accomplish this, either assume an infiltration rate based on previously available data, or use a default infiltration rate of 0.5 inches/hour. This

trial geometry should be used to help locate the facility, and for planning purposes in developing the geotechnical subsurface investigation plan.

4. Conduct a geotechnical investigation:

A geotechnical investigation must be conducted to evaluate the site's suitability for infiltration, to establish the infiltration rate for design, and to evaluate slope stability, foundation capacity, and other geotechnical design information needed to design and assess constructability of the facility. Geotechnical investigation requirements are provided below.

The depth, number of test holes or test pits, and sampling described below should be increased if a licensed engineer with geotechnical expertise (P.E.), or a licensed geologist or hydrogeologist judges that conditions are highly variable and make it necessary to increase the depth or the number of explorations to accurately estimate the infiltration system's performance. The exploration program described below may be decreased if the licensed professional judges that conditions are relatively uniform, or design parameters are known to be conservative based on site specific data or experience, and the borings/test pits omitted will not influence the design or successful operation of the facility.

- For infiltration basins (ponds), at least one test pit or test hole per 5,000 ft2 of basin infiltrating surface.
- For infiltration trenches, at least one test pit or test hole per 100 feet of trench length.
- Subsurface explorations (test holes or test pits) to a depth below the base of the infiltration facility of at least 5 times the maximum design depth of water proposed for the infiltration facility, or at least 2 feet into the saturated zone.
- Continuous sampling to a depth below the base of the infiltration facility of 2.5 times the maximum design depth of water proposed for the infiltration facility, or at least 2 feet into the saturated zone, but not less than 6 feet. Samples obtained must be adequate for the purpose of soil gradation/classification testing.
- Ground water monitoring wells installed to locate the ground water table and establish its gradient, direction of flow, and seasonal variations, considering both confined and unconfined aquifers. (Monitoring through at least one wet season is required, unless site historical data regarding ground water levels is available.) In general, a minimum of three wells per infiltration facility, or three hydraulically connected surface or ground water features, are needed to determine the direction of flow and gradient. If gradient and flow direction are not required, and there is low risk of down-gradient impacts, one monitoring well is sufficient. Alternative means of establishing the ground water levels may be considered. If the ground

water in the area is known to be greater than 50 feet below the proposed facility, detailed investigation of the ground water regime is not necessary.

- Laboratory testing as necessary to establish the soil gradation characteristics and other properties as necessary, to complete the infiltration facility design. At a minimum, one-grain size analysis per soil stratum in each test hole must be conducted within 2.5 times the maximum design water depth, but not less than 6 feet. When assessing the hydraulic conductivity characteristics of the site, soil layers at greater depths must be considered if the licensed professional conducting the investigation determines that deeper layers will influence the rate of infiltration for the facility, requiring soil gradation/classification testing for layers deeper than indicated above.

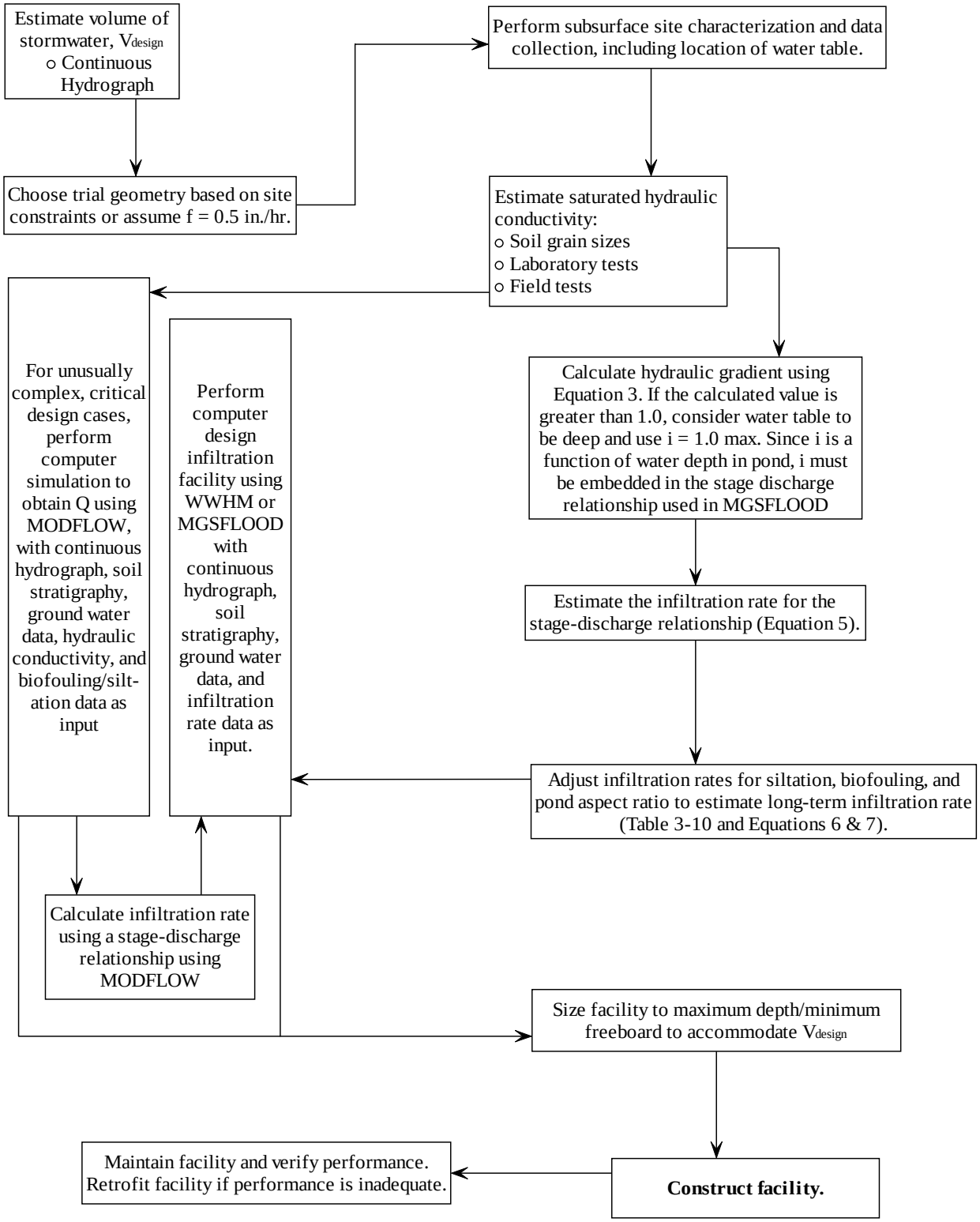

Figure 3.29 – Engineering Design Steps for Final Design of Infiltration Facilities Using the Continuous Hydrograph Method

5. **From the geotechnical investigation, determine the following, as applicable:**

- The stratification of the soil/rock below the infiltration facility, including the soil gradation (and plasticity, if any) characteristics of each stratum.
- The depth to the ground water table and to any bedrock/impermeable layers.
- Seasonal variation of the ground water table.
- The existing ground water flow direction and gradient.
- The hydraulic conductivity or the infiltration rate for the soil/rock at the infiltration facility.
- The porosity of the soil below the infiltration facility but above the water table.
- The lateral extent of the infiltration receptor.
- Impact of the infiltration rate and volume on flow direction and water table at the project site, and the potential discharge point or area of the infiltrating water.

6. **Determine the saturated hydraulic conductivity as follows:**

For each defined layer below the pond to a depth below the pond bottom of 2.5 times the maximum depth of water in the pond, but not less than 6 feet, estimate the saturated hydraulic conductivity in cm/sec using the following relationship (see Massmann 2003, and Massmann et al., 2003)

$$\log_{10}(K_{sat}) = -1.57 + 1.90D_{10} + 0.015D_{60} - 0.013D_{90} - 2.08f_{fines} \quad (1)$$

Where, D_{10}, D_{60} and D_{90} are the grain sizes in mm for which 10 percent, 60 percent and 90 percent of the sample is more fine and f_{fines} is the fraction of the soil (by weight) that passes the number-200 sieve (K_{sat} is in cm/s).

If the licensed professional conducting the investigation determines that deeper layers will influence the rate of infiltration for the facility, soil layers at greater depths must be considered when assessing the site's hydraulic conductivity characteristics. Massmann (2003) indicates that where the water table is deep, soil or rock strata up to 100 feet below an infiltration facility can influence the rate of infiltration. Note that only the layers near and above the water table or low permeability zone (e.g., a clay, dense glacial till, or rock layer) need to be considered, as the layers below the ground water table or low permeability zone do not significantly influence the rate of infiltration. Also note that this equation for estimating hydraulic conductivity assumes minimal compaction consistent

with the use of tracked (i.e., low to moderate ground pressure) excavation equipment. If the soil layer being characterized has been exposed to heavy compaction, or is heavily over consolidated due to its geologic history (e.g., overridden by continental glaciers), the hydraulic conductivity for the layer could be approximately an order of magnitude less than what would be estimated based on grain size characteristics alone (Pitt, 2003). In such cases, compaction effects must be taken into account when estimating hydraulic conductivity. For clean, uniformly graded sands and gravels, the reduction in K_{sat} due to compaction will be much less than an order of magnitude. For well-graded sands and gravels with moderate to high silt content, the reduction in K_{sat} will be close to an order of magnitude. For soils that contain clay, the reduction in K_{sat} could be greater than an order of magnitude.

For critical designs, the in-situ saturated conductivity of a specific layer can be obtained through field tests such as the packer permeability test (above or below the water table), the piezocone (below the water table), an air conductivity test (above the water table), or through the use of a pilot infiltration test (PIT) as described in Appendix III-D. Note that these field tests generally provide a hydraulic conductivity combined with a hydraulic gradient (i.e., Equation 5). In some of these tests, the hydraulic gradient may be close to 1.0; therefore, in effect, the magnitude of the test result is the same as the hydraulic conductivity. In other cases, the hydraulic gradient may be close to the gradient that is likely to occur in the full-scale infiltration facility. This issue will need to be evaluated on a case-by-case basis when interpreting the results of field tests. It is important to recognize that the gradient in the test may not be the same as the gradient likely to occur in the full-scale infiltration facility in the long-term (i.e., when ground water mounding is fully developed).

Once the saturated hydraulic conductivity for each layer has been identified, determine the effective average saturated hydraulic conductivity below the pond. Hydraulic conductivity estimates from different layers can be combined using the harmonic mean:

$$K_{equiv} = \frac{d}{\sum \frac{d_i}{K_i}} \qquad (2)$$

Where, d is the total depth of the soil column, d_i is the thickness of layer "i" in the soil column, and K_i is the saturated hydraulic conductivity of layer "i" in the soil column. The depth of the soil column, d, typically would include all layers between the pond bottom and the water table. However, for sites with very deep water tables (>100 feet) where ground water mounding to the base of the pond is not likely to occur, it is

recommended that the total depth of the soil column in Equation 2 be limited to approximately 20 times the depth of pond. This is to ensure that the most important and relevant layers are included in the hydraulic conductivity calculations. Deep layers that are not likely to affect the infiltration rate near the pond bottom should not be included in Equation 2. Equation 2 may over-estimate the effective hydraulic conductivity value at sites with low conductivity layers immediately beneath the infiltration pond. For sites where the lowest conductivity layer is within five feet of the base of the pond, it is suggested that this lowest hydraulic conductivity value be used as the equivalent hydraulic conductivity rather than the value from Equation 2. The harmonic mean given by Equation 2 is the appropriate effective hydraulic conductivity for flow that is perpendicular to stratigraphic layers, and will produce conservative results when flow has a significant horizontal component such as could occur due to ground water mounding.

7. Calculate the hydraulic gradient as follows:

The steady state hydraulic gradient is calculated as follows:

$$\text{gradient} = i \approx \frac{D_{wt} + D_{pond}}{13862(K^{0.1})} CF_{size} \qquad (3)$$

Where, D_{wt} is the depth from the base of the infiltration facility to the water table in feet, K is the saturated hydraulic conductivity in feet/day, D_{pond} is the depth of water in the facility in feet (see Massmann et al., 2003, for the development of this equation), and CF_{size}, is the correction for pond size. The correction factor was developed for ponds with bottom areas between 0.6 and 6 acres in size. For small ponds (ponds with area equal to 2/3 acre), the correction factor is equal to 1.0. For large ponds (ponds with area equal to 6 acres), the correction factor is 0.2, as shown in Equation 4.

$$CF_{size} = 0.73(A_{pond})^{-0.76} \qquad (4)$$

Where, A_{pond} is the area of pond bottom in acres. This equation generally will result in a calculated gradient of less than 1.0 for moderate to shallow ground water depths (or to a low permeability layer) below the facility, and conservatively accounts for the development of a ground water mound. A more detailed ground water mounding analysis using a program such as MODFLOW will usually result in a gradient that is equal to or greater than the gradient calculated using Equation 3. If the calculated gradient is greater than 1.0, the water table is considered to be deep, and a maximum gradient of 1.0 must be used. Typically, a depth to ground water of 100 feet or more is required to obtain a gradient of 1.0 or more using this equation. Since the gradient is a function of depth of

water in the facility, the gradient will vary as the pond fills during the season. The gradient could be calculated as part of the stage-discharge calculation used in the continuous runoff models. As of the date of this update, neither the WWHM or MGSFlood have that capability. However, updates to those models may soon incorporate the capability. Until that time, use a steady-state hydraulic gradient that corresponds with a ponded depth of ¼ of the maximum ponded depth – as measured from the basin floor to the overflow.

8. Calculate the infiltration rate using Darcy's law as follows:

$$f = K\left(\frac{dh}{dz}\right) = Ki \qquad (5)$$

Where, f is the specific discharge or infiltration rate of water through a unit cross-section of the infiltration facility (L/t), K is the hydraulic conductivity (L/t), dh/dz is the hydraulic gradient (L/L), and "i" is the gradient.

9. Adjust infiltration rate or infiltration stage-discharge relationship obtained in Steps 8 and 9:

This is done to account for reductions in the rate resulting from long-term siltation and biofouling, taking into consideration the degree of long-term maintenance and performance monitoring anticipated, the degree of influent control (e.g., pre-settling ponds biofiltration swales, etc.), and the potential for siltation, litterfall, moss buildup, etc. based on the surrounding environment. It should be assumed that an average to high degree of maintenance will be performed on these facilities. A low degree of maintenance should be considered only when there is no other option (e.g., access problems). The infiltration rate estimated in Step 8 and 9 is multiplied by the reduction factors summarized in Table 3-10.

Table 3.10 Infiltration Rate Reduction Factors to Account for Biofouling and Siltation Effects for Ponds (Massmann, 2003).

Potential for Biofouling	Degree of Long-Term Maintenance/Performance Monitoring	Infiltration Rate Reduction Factor, $CF_{silt/bio}$
Low	Average to High	0.9
Low	Low	0.6
High	Average to High	0.5
High	Low	0.2

The values in this table assume that final excavation of the facility to the finished grade is deferred until all disturbed areas in the upgradient drainage area have been stabilized or protected (e.g., construction runoff is

not allowed into the facility after final excavation of the facility). Ponds located in shady areas where moss and litterfall from adjacent vegetation can build up on the pond bottom and sides, the upgradient drainage area will remain in a disturbed condition long-term, and no pretreatment (e.g., pre-settling ponds, biofiltration swales, etc.) is provided, are one example of a situation with a high potential for biofouling. A low degree of long-term maintenance includes, for example, situations where access to the facility for maintenance is very difficult or limited, or where there is minimal control of the party responsible for enforcing the required maintenance. A low degree of maintenance should be considered only when there is no other option.

Also adjust this infiltration rate for the effect of pond aspect ratio by multiplying the infiltration rate determined in Step 9 (Equation 6) by the aspect ratio correction factor F_{aspect} as shown in the following equation:

$$CF_{aspect} = 0.02A_r + 0.98 \qquad (6)$$

Where, A_r is the aspect ratio for the pond (length/width). In no case shall CF_{aspect} be greater than 1.4.

The final infiltration rate will therefore be as follows:

$$f = K \bullet i \bullet CF_{aspect} \bullet CF_{silt/bio} \qquad (7)$$

The rates calculated based on Equations 5 and 7 are long-term design rates. No additional reduction factor or factor of safety is needed.

10. Size the facility:

Size the facility to ensure that the desirable pond depth is three feet, with one-foot minimum required freeboard. The maximum allowable pond depth is six feet.

Where the infiltration facility is being used to meet treatment requirements, check that the 91st percentile, 24-hour runoff volume (indicated by WWHM or MGS Flood) can infiltrate through the infiltration basin surface within 48 hours. This can be calculated by multiplying a horizontal projection of the infiltration basin mid-depth dimensions by the estimated long-term infiltration rate; and multiplying the result by 48 hours. Finally, check to make sure that the basin can drain its maximum ponded water depth within 24 hours

11. **Construct the facility:**

Maintain and monitor the facility for performance in accordance with section 3.3.8.

3.3.9 General Design, Maintenance, and Construction Criteria for Infiltration Facilities

This section covers design, construction and maintenance criteria that apply to infiltration basins and trenches.

Design Criteria – Sizing Facilities

The size of the infiltration facility can be determined by routing the influent runoff file generated by the continuous runoff model through it. To prevent the onset of anaerobic conditions, an infiltration facility designed for treatment purposes must be designed to drain the 91st percentile, 24-hour runoff volume within 48 hours (see explanation under simplified or detailed design procedures. In general, an infiltration facility would have 2 discharge modes. The primary mode of discharge from an infiltration facility is infiltration into the ground. However, when the infiltration capacity of the facility is reached, additional runoff to the facility will cause the facility to overflow. Overflows from an infiltration facility must comply with the Minimum Requirement #7 for flow control in Volume I. Infiltration facilities used for runoff treatment must not overflow more than 9% of the influent runoff file.

In order to determine compliance with the flow control requirements, the Western Washington Hydrology Model (WWHM), or an appropriately calibrated continuous simulation model based on HSPF, must be used. When using WWHM for simulating flow through an infiltrating facility, the facility is represented by using the Pond Icon and entering the pre-determined infiltration rates. Below are the procedures for sizing a pond (A) to completely infiltrate 100% of runoff; (B) to treat 91% of runoff to meet the water quality treatment requirements, and (C) to partially infiltrate runoff to meet flow duration standard.

(A) For 100% infiltration

(1) Input dimensions of your infiltration pond,

(2) Input infiltration rate and safety (rate reduction) factor,

(3) Input a riser height and diameter (any flow through the riser indicates that you have less than 100% infiltration and must increase your infiltration pond dimensions).

(4) Run only HSPF for Developed Mitigated Scenario (if that is where you put the infiltration pond). Don't need to run duration.

(5) Go back to your infiltration pond and look at the Percentage Infiltrated at the bottom right. If less than 100% infiltrated, increase pond dimension until you get 100%.

(B) For 91% infiltration (water quality treatment volume)

The procedure is the same as above, except that your target is 91%.

Infiltration facilities for treatment can be located upstream or downstream of detention and can be off-line or on-line.

On-line treatment facilities placed ***upstream or downstream*** of a detention facility must be sized to infiltrate 91% of the runoff file volume directed to it.

Off-line treatment facilities placed ***upstream*** of a detention facility must have a flow splitter designed to send all flows at or below the 15-minute water quality flow rate, as predicted by WWHM (or other approved continuous runoff model), to the treatment facility. Within the WWHM, the flow splitter icon is placed ahead of the pond icon which represents the infiltration basin. The treatment facility must be sized to infiltrate all the runoff sent to it (no overflows from the treatment facility are allowed).

Off-line treatment facilities placed ***downstream*** of a detention facility must have a flow splitter designed to send all flows at or below the 2-year flow frequency from the detention pond, as predicted by WWHM (or other approved continuous runoff model), to the treatment facility. Within the WWHM, the flow splitter icon is placed ahead of the pond icon which represents the infiltration basin. The treatment facility must be sized to infiltrate all the runoff sent to it (no overflows from the treatment facility are allowed).

See Chapter 4 for flow splitter design details.

(C) To meet flow duration standard with infiltration ponds

This design will allow something less than 100% infiltration as long as any overflows will meet the flow duration standard. You would need a discharge structure with orifices and risers similar to a detention facility except that, in addition, you also have infiltration occurring from the pond.

Additional Design Criteria

- Slope of the base of the infiltration facility should be <3 percent.
- Spillways/overflow structures – A nonerodible outlet or spillway with a firmly established elevation must be constructed to discharge overflow. Ponding depth, drawdown time, and storage volume are calculated from that reference point. Overflow Structure-Refer to Chapter 2 for design details
- For infiltration treatment facilities, side-wall seepage is not a concern if seepage occurs through the same stratum as the bottom of the facility. However, for engineered soils or for soils with very low permeability, the potential to bypass the treatment soil through the side-walls may be significant. In those cases, the side-walls must be lined, either with an impervious liner or with at least 18 inches of

treatment soil, to prevent seepage of untreated flows through the side walls.

Construction Criteria

- Initial basin excavation should be conducted to within 1-foot of the final elevation of the basin floor. Excavate infiltration trenches and basins to final grade only after all disturbed areas in the upgradient project drainage area have been permanently stabilized. The final phase of excavation should remove all accumulation of silt in the infiltration facility before putting it in service. After construction is completed, prevent sediment from entering the infiltration facility by first conveying the runoff water through an appropriate pretreatment system such as a pre-settling basin, wet pond, or sand filter.
- Infiltration facilities should generally not be used as temporary sediment traps during construction. If an infiltration facility is to be used as a sediment trap, it must not be excavated to final grade until after the upgradient drainage area has been stabilized. Any accumulation of silt in the basin must be removed before putting it in service.
- Traffic Control – Relatively light-tracked equipment is recommended for this operation to avoid compaction of the basin floor. The use of draglines and trackhoes should be considered for constructing infiltration basins. The infiltration area should be flagged or marked to keep heavy equipment away.

Maintenance Criteria

Provision should be made for regular and perpetual maintenance of the infiltration basin/trench, including replacement and/or reconstruction of the any media that are relied upon for treatment purposes. Maintenance should be conducted when water remains in the basin or trench for more than 24 hours after the end of a rainfall event, or when overflows occur more frequently than planned. For example, off-line infiltration facilities should not have any overflows. Infiltration facilities designed to completely infiltrate all flows to meet flow control standards should not overflow. An Operation and Maintenance Plan, approved by the local jurisdiction, should ensure maintaining the desired infiltration rate.

Adequate access for operation and maintenance must be included in the design of infiltration basins and trenches.

Removal of accumulated debris/sediment in the basin/trench should be conducted every 6 months or as needed to prevent clogging, or when water remains in the pond for greater than 24 hours after the end of a rainfall event.

For more detailed information on maintenance, see Volume V, Section 4.6 – Maintenance Standards for Drainage Facilities.

Verification of Performance

During the first 1-2 years of operation verification testing (specified in SSC-9) is strongly recommended, along with a maintenance program that results in achieving expected performance levels. Operating and maintaining ground water monitoring wells (specified in Section 3.3.7 - Site Suitability Criteria) is also strongly encouraged.

3.3.10 Infiltration Basins

This section covers design and maintenance criteria specific for infiltration basins. (See schematic in Figure 3.25)

Description:

Infiltration basins are earthen impoundments used for the collection, temporary storage and infiltration of incoming stormwater runoff.

Design Criteria Specific for Basins

- Access should be provided for vehicles to easily maintain the forebay (presettling basin) area and not disturb vegetation, or resuspend sediment any more than is absolutely necessary.
- The slope of the basin bottom should not exceed 3% in any direction.
- A minimum of one foot of freeboard is recommended when establishing the design ponded water depth. Freeboard is measured from the rim of the infiltration facility to the maximum ponding level or from the rim down to the overflow point if overflow or a spillway is included.
- Treatment infiltration basins must have sufficient vegetation established on the basin floor and side slopes to prevent erosion and sloughing and to provide additional pollutant removal. Erosion protection of inflow points to the basin must also be provided (e.g., riprap, flow spreaders, energy dissipators (See Chapter 4)). Select suitable vegetative materials for the basin floor and side slopes to be stabilized. Refer to Chapter 0 for recommended vegetation.
- Lining material – Basins can be open or covered with a 6 to 12-inch layer of filter material such as coarse sand, or a suitable filter fabric to help prevent the buildup of impervious deposits on the soil surface. A nonwoven geotextile should be selected that will function sufficiently without plugging (see geotextile specifications in Appendix V-C of Volume V). The filter layer can be replaced or cleaned when/if it becomes clogged.

- Vegetation – The embankment, emergency spillways, spoil and borrow areas, and other disturbed areas should be stabilized and planted, preferably with grass, in accordance with Stormwater Site Plan (See Minimum Requirement #1 of Volume I). Without healthy vegetation the surface soil pores would quickly plug.

Maintenance Criteria for Basins

- Maintain basin floor and side slopes to promote dense turf with extensive root growth. This enhances infiltration, prevents erosion and consequent sedimentation of the basin floor, and prevents invasive weed growth. Bare spots are to be immediately stabilized and revegetated.

- Vegetation growth should not be allowed to exceed 18 inches in height. Mow the slopes periodically and check for clogging, and erosion.

- Seed mixtures should be the same as those recommended in Table 3.2. The use of slow-growing, stoloniferous grasses will permit long intervals between mowing. Mowing twice a year is generally satisfactory. Fertilizers should be applied only as necessary and in limited amounts to avoid contributing to ground water pollution. Consult the local extension agency for appropriate fertilizer types, including slow release fertilizers, and application rates.

3.3.11 Infiltration Trenches

This section covers design, construction, and maintenance criteria specific for infiltration trenches.

Description:

Infiltration trenches are generally at least 24 inches wide, and are backfilled with a coarse stone aggregate, allowing for temporary storage of stormwater runoff in the voids of the aggregate material. Stored runoff then gradually infiltrates into the surrounding soil. The surface of the trench can be covered with grating and/or consist of stone, gabion, sand, or a grassed covered area with a surface inlet. Perforated rigid pipe of at least 8-inch diameter can also be used to distribute the stormwater in a stone trench.

See Figures 3.30 for schematic of an infiltration trench. See Figures 3.31, 3.32, 3.33, 3.34, and 3.35 for examples of trench designs.

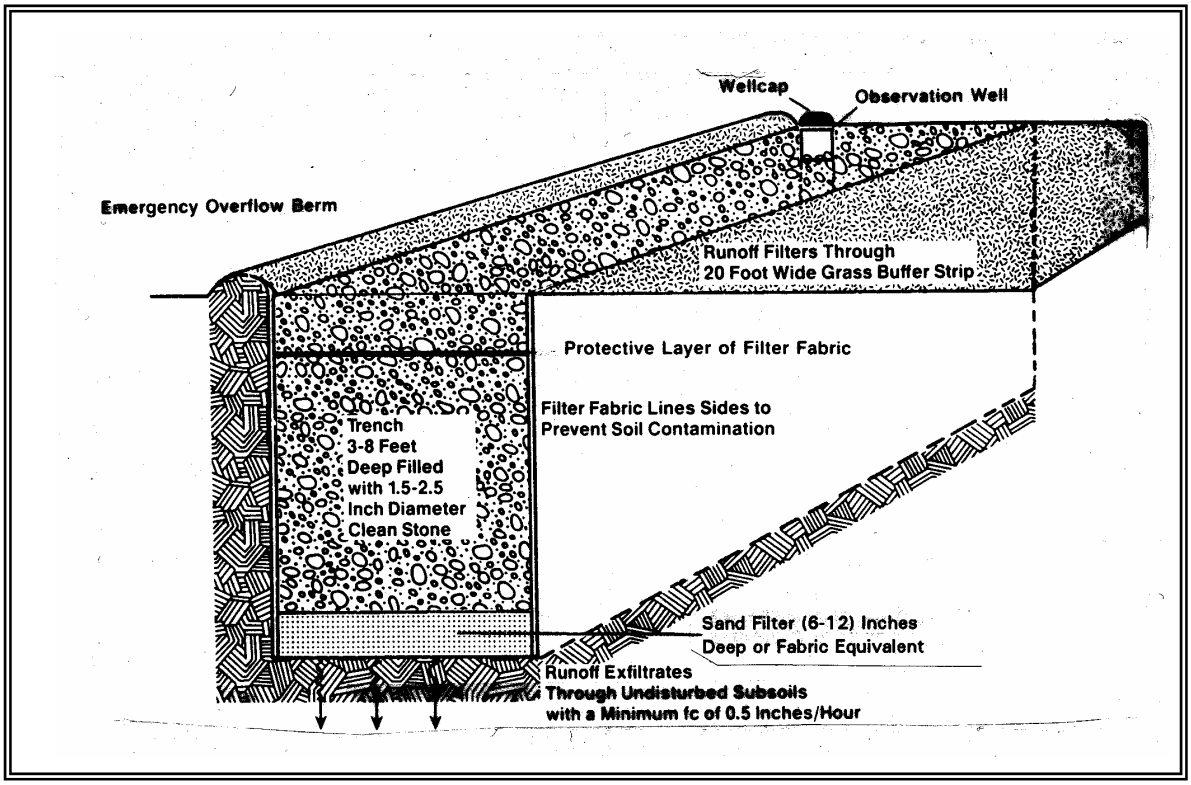

Figure 3.30 – Schematic of an Infiltration Trench

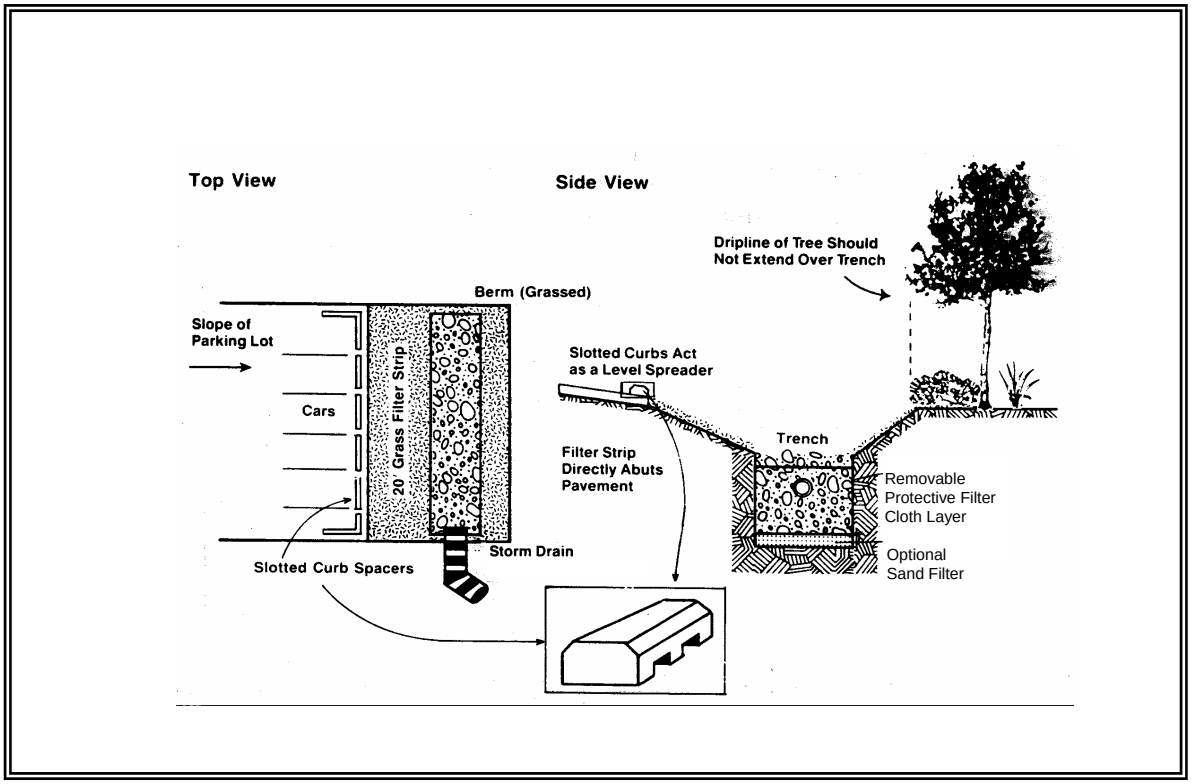

Figure 3.31 – Parking Lot Perimeter Trench Design

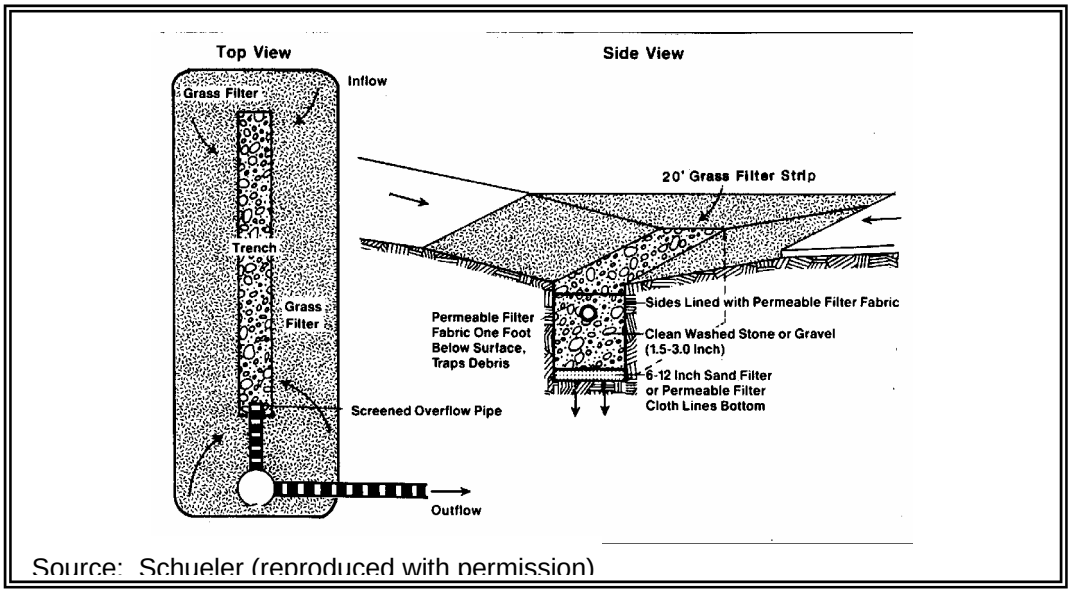

Source: Schueler (reproduced with permission)

Figure 3.32 Median Strip Trench Design

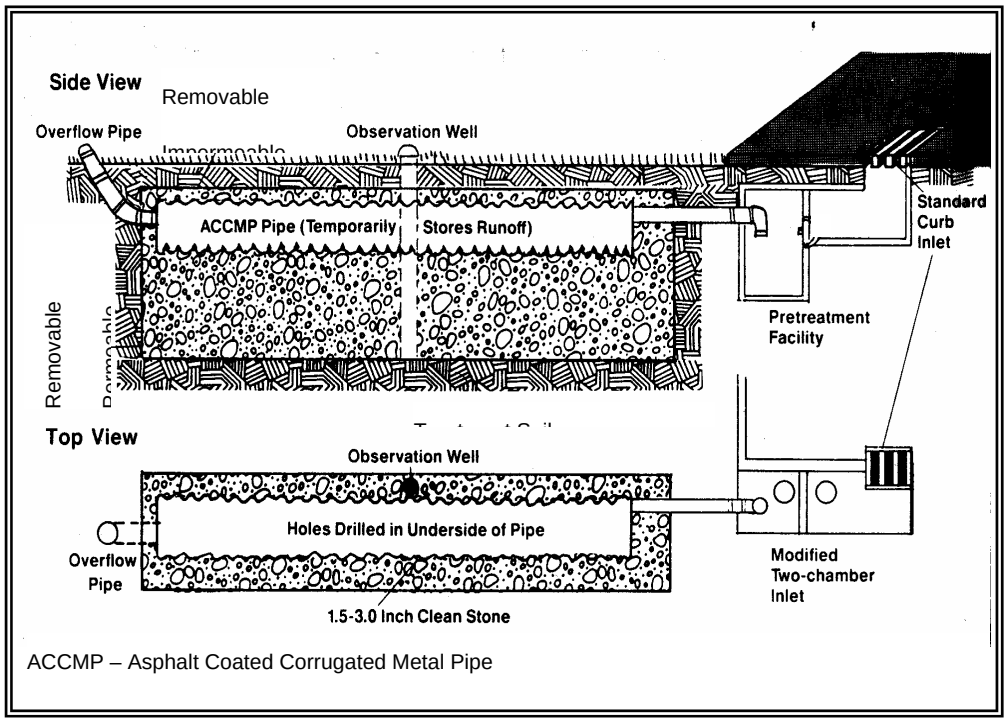

Source: Schueler (reproduced with permission)

Figure 3.33 Oversized Pipe Trench Design

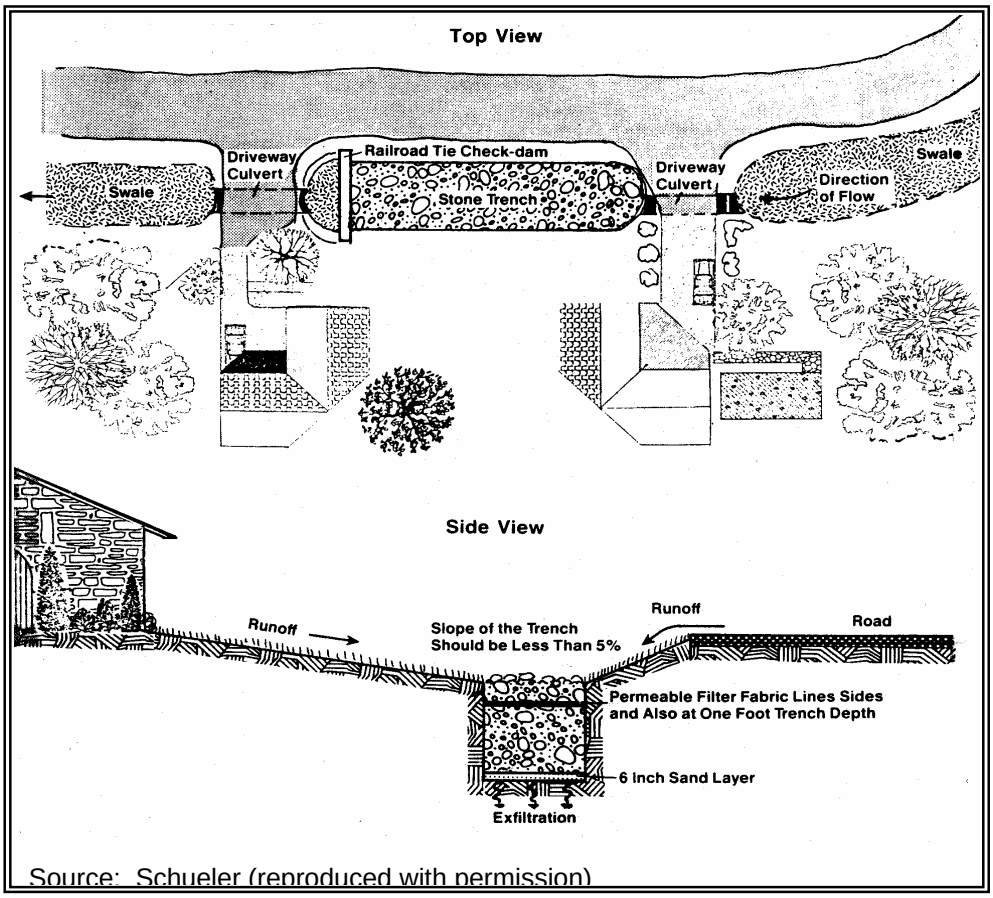

Source: Schueler (reproduced with permission)

Figure 3.34 – Swale/Trench Design

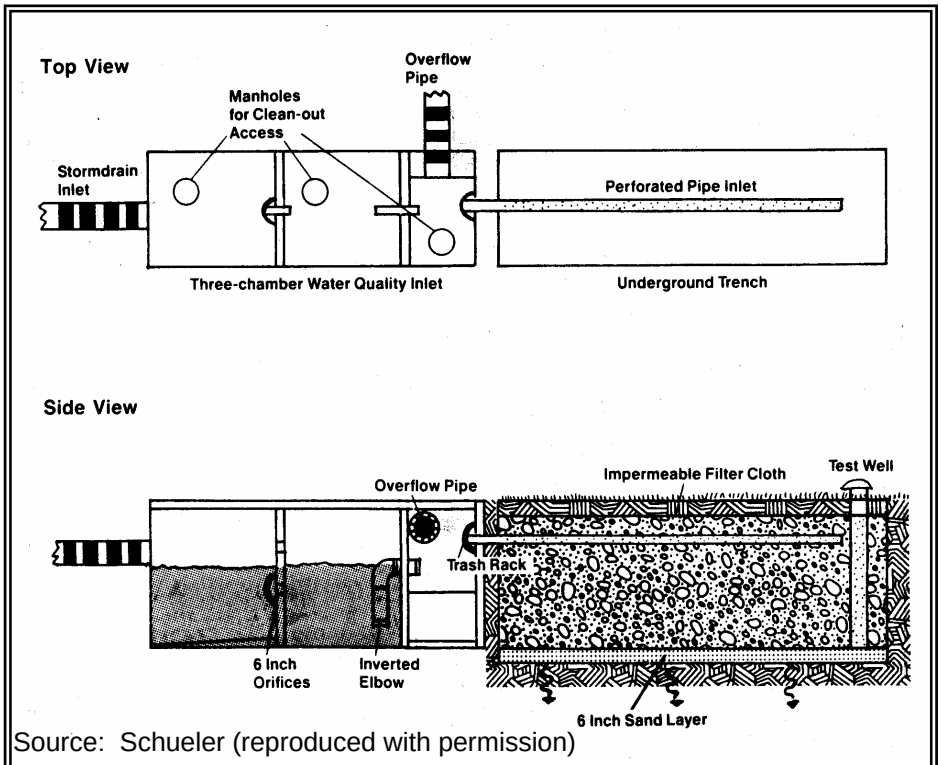

Source: Schueler (reproduced with permission)

Figure 3.35 Underground Trench with Oil/Grit Chamber

Design Criteria

- Due to accessibility and maintenance limitations infiltration trenches must be carefully designed and constructed. The local jurisdiction should be contacted for additional specifications.
- Consider including an access port or open or grated top for accessibility to conduct inspections and maintenance.
- Backfill Material - The aggregate material for the infiltration trench should consist of a clean aggregate with a maximum diameter of 3 inches and a minimum diameter of 1.5 inches. Void space for these aggregates should be in the range of 30 to 40 percent.
- Geotextile fabric liner - The aggregate fill material shall be completely encased in an engineering geotextile material. Geotextile should surround all of the aggregate fill material except for the top one-foot, which is placed over the geotextile. Geotextile fabric with acceptable properties must be carefully selected to avoid plugging (see Appendix V-C of Volume V).
- The bottom sand or geotextile fabric as shown in the attached figures is optional.

Refer to the Federal Highway Administration Manual "Geosynthetic Design and Construction Guidelines," Publication No. FHWA HI-95-038, May 1995 for design guidance on geotextiles in drainage applications. Refer to the NCHRP Report 367, "Long-Term Performance of Geosynthetics in Drainage Applications," 1994, for long-term performance data and background on the potential for geotextiles to clog, blind, or to allow piping to occur and how to design for these issues.

- Overflow Channel - Because an infiltration trench is generally used for small drainage areas, an emergency spillway is not necessary. However, a non-erosive overflow channel leading to a stabilized watercourse should be provided.
- Surface Cover-A stone filled trench can be placed under a porous or impervious surface cover to conserve space.
- Observation Well - An observation well should be installed at the lower end of the infiltration trench to check water levels, drawdown time, sediment accumulation, and conduct water quality monitoring. Figure 3.36 illustrates observation well details. It should consist of a perforated PVC pipe which is 4 to 6 inches in diameter and it should be constructed flush with the ground elevation. For larger trenches a 12-36 inch diameter well can be installed to facilitate maintenance operations such as pumping out the sediment. The top of the well should be capped to discourage vandalism and tampering.

Construction Criteria

- Trench Preparation -Excavated materials must be placed away from the trench sides to enhance trench wall stability. Care should also be taken to keep this material away from slopes, neighboring property, sidewalks and streets. It is recommended that this material be covered with plastic. (see Erosion/sediment control Criteria in Volume II).
- Stone Aggregate Placement and Compaction - The stone aggregate should be placed in lifts and compacted using plate compactors. As a rule of thumb, a maximum loose lift thickness of 12 inches is recommended. The compaction process ensures geotextile conformity to the excavation sides, thereby reducing potential piping and geotextile clogging, and settlement problems.
- Potential Contamination - Prevent natural or fill soils from intermixing with the stone aggregate. All contaminated stone aggregate must be removed and replaced with uncontaminated stone aggregate.
- Overlapping and Covering-Following the stone aggregate placement, the geotextile must be folded over the stone aggregate to form a 12 inch minimum longitudinal overlap. When overlaps are required between rolls, the upstream roll should overlap a minimum of 2 feet over the downstream roll in order to provide a shingled effect.
- Voids behind Geotextile - Voids between the geotextile and excavation sides must be avoided. Removing boulders or other obstacles from the trench walls is one source of such voids. Natural soils should be placed in these voids at the most convenient time during construction to ensure geotextile conformity to the excavation sides. Soil piping, geotextile clogging, and possible surface subsidence will be avoided by this remedial process.
- Unstable Excavation Sites - Vertically excavated walls may be difficult to maintain in areas where the soil moisture is high or where soft or cohesionless soils predominate. Trapezoidal, rather than rectangular, cross-sections may be needed.

Maintenance Criteria

Sediment buildup in the top foot of stone aggregate or the surface inlet should be monitored on the same schedule as the observation well.

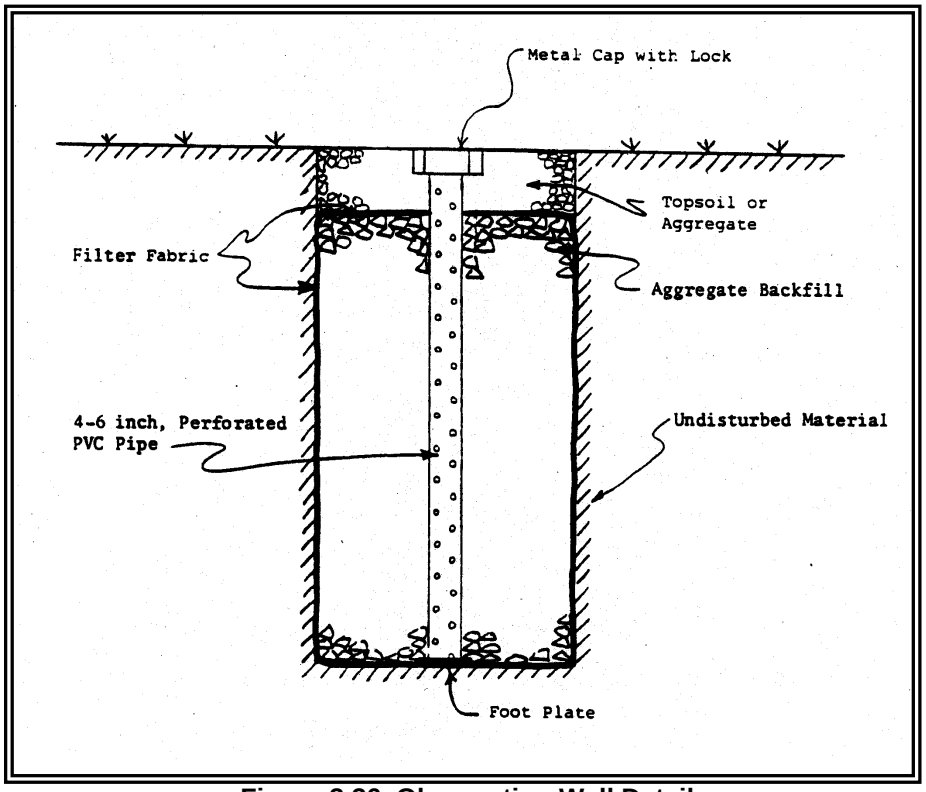

Figure 3.36 Observation Well Details

Volume III References

Chin, D.A., Water Resources Engineering, Prentice Hall, New Jersey, 2000

Chow, V.T., Handbook of Applied Hydrology, McGraw Hill Book Co., New York, 1964.

Department of Ecology, Stormwater Management Manual for the Puget Sound Basin, February, 1992.

Dinacola, R.S., Characterization and Simulation of Rainfall-Runoff Relations for Headwater Basins in Western King and Snohomish Counties, Washington, USGS Water Resources Investigations Report 89-4052, 1989.

Ferguson, Bruce K., Stormwater Infiltration, Lewis Publishers, 1994.

Horner, Richard Fundamentals of Urban Runoff Management-Technical and Institutional Issues, 1994

Huber, Wayne, and Robert Dickinson, Stormwater Management Model Version 4 Part A: User's Manual, Environmental Research Laboratory, Athens, GA, 1988.

King County Runoff Time Series (KCRTS), King County Department of Natural Resources, Personal Communication, 1999.

Massmann, Joel & Carolyn Butchart, U. of Washington Infiltration Characteristics, Performance, and Design of Storm Water Facilities, March 2000

NOAA Atlas 2, Precipitation Frequency Atlas of the Western United States, Volume IX-Washington.

Rawls, W. J., Brakensiek, D. L. and Saxton, K. E. Estimation of Soil Properties. Transactions of the American Society of Agricultural Engineers, Vol. 25, No. 5, pp. 1316-1320, 1982.

Stubdaer, J.M., The Santa Barbara Urban Hydrograph Method, National Symposium on Urban Hydrology and Sediment Control, University of Kentucky, Lexington, KY, 1975.

USDA-SCS, Technical Release No. 20 (TR-20) Model Project Formulation, 1982.

USDA-SCS, Technical Release No. 55: Urban Hydrology for Small Watersheds, 1986.

USEPA, Hydrological Simulation Program - Fortran HSPF Users Manual for Release 9., EPA 600/3-84-066, Environmental Research Laboratory, Athens, GA, June 1984.

Wiltsie, Edward, Stormwater Facilities Performance Study, Infiltration Pond Testing and Data Evaluation, August 10, 1998

Resource Materials (not specifically referenced in text)

Barfield, B. J., and Warner, R. C., and Haan, C. T. Applied Hydrology and Sedimentology for Disturbed Areas. Oklahoma Technical Press, Stillwater, Oklahoma, 1983.

Bentall, R., Methods of Collecting and Interpreting Ground Water Data, U.S. G. S. Water Supply Paper 1544-H., 1963, 97 p.

Bianchi, W.C. and D.C. Muckel, Ground Water Recharge Hydrology, ARS 41-161, USDA, 1970. 62 p.

Bouwer, Herman., Groundwater Hydrology, McGraw-Hill Book Company, Inc., N.Y., 1978.

Camp Dresser & McKee, Larry Walker Associates, Uribe and Associates, and Resource Planning Associates. California Storm Water Best Management Practice Handbooks. March 1993

Caraco, D., Claytor, R., Stormwater BMP Design Supplement for Cold Climates USEPA, December 1997

Davis, S.N. and R.J. DeWiest, Hydrogeology. John Wiley and Sons, N.Y., 1966.

Ferguson, Bruce K., Stormwater Infiltration, Lewis Publishers, 1994.

Ferris, J.G., D.B. Knowles, R.H. Brown, and R.W. Stallman, Theory of Aquifer Tests, USGS, Water Supply Paper No. 1536-E.

Gaus, Jennifer J., Soils of Stormwater Infiltration Basins in the Puget Sound Region: Trace Metal Form and Concentration and Comparison to Washington State Department of Ecology Guidelines, Master of Science, U. of Washington, 1993.

Hannon, J. B., Underground Disposal of Storm Water Runoff, Design Guidelines Manual, California Department of Transportation, U.S. Department of Transportation, Washington, DC (FHWA-TS-80-218), February 1980.

Harrington, Bruce W., Design and Construction of Infiltration Trenches, Seminar-Urban Watershed Management, How to Design Urban Stormwater Best Management Practices, ASCE, July, 1994.

Hilding, Karen, A Survey of Infiltration Basins in the Puget Sound Regions, Masters Project, U. of California, 1993.

Jacobson, Michael A., Summary and Conclusions from Applied Research on Infiltration Basins and Recommendations for Modifying the Washington Department of Ecology Stormwater Management Manual for the Puget Sound Basin. University of Washington, Center for Urban Water Resources Management. May 1993.

King County, Washington, Surface Water Design Manual, September 1, 1998.

Klochak, John R., An Investigation of the Effectiveness of Infiltration Systems in Treating Urban Runoff, Master of Science, U. of Washington, 1992.

Konrad, C. P., Jensen, B. W., Burges, S. J, Reinelt, L. E. On-Site Residential Stormwater Management Alternatives. Center for Urban Water Resources, University of Washington. September 1995.

Livingston, E. H., Infiltration Practices: The Good, the Bad, and the Ugly, National Conference on Urban Runoff Management, Chicago, Ill. 1993.

Moore, John, Seepage: A System for Early Evaluation of the Pollution Potential of Agriculture Groundwater Environments, SCS, 1988.

Pettyjohn, W.A., Introduction to Artificial Ground Water Recharge, USEPA, Ada, Oklahoma, National Waterwell Association, Worthington, Ohio, 1981, 44 p.

Rawls, W. J., D. L. Brakensiek, and K. E. Saxton, Estimation of Soil Properties. Transactions of the American Society of Agricultural Engineers, Vol. 25, No. 5, pp. 1316-1320, 1982.

Schueler, Thomas, et. al., A Current Assessment of Urban Best Management Practices, March, 1992

Soil Conservation Service, SCS National Engineering Handbook Section 8, Engineering Geology , USDA., 1978.

Soil Conservation Service, USDA, SCS National Engineering Handbook, Section 18 Ground Water, 1968.

Soil Conservation Service, USDA, SCS Technical Release No. 36, Ground Water Recharge, Engineering Division, 1967, 22 p.

Todd, D.K., Ground Water Hydrology, John Wiley and Sons, Inc., N.Y., 1959.

Urbonas and Stahre, “Stormwater Best Management Practices”, Prentiss-Hall, 1993

WEF Manual of Practice #23 Urban Runoff Quality Management, Water Environment Federation & ASCE 1998.

Wenzel, L.K., Methods of Determining Permeability of Water Bearing Materials, USGS Water Supply Paper 887, 1942.

Wiltsie, Edward, Stormwater Facilities Performance Study, Infiltration Pond Testing and Data Evaluation, August 10, 1998

Woodward-Clyde, BMP Design Recommendations, November 1995

Appendix III-A
Isopluvial Maps for Design Storms

Included in this appendix are the 2, 10 and 100-year, 24-hour design storm and mean annual precipitation isopluvial maps for Western Washington. These have been taken from NOAA Atlas 2 "Precipitation - Frequency Atlas of the Western United States, Volume IX, Washington.

Western Washington Isopluvial 2-year, 24 hour

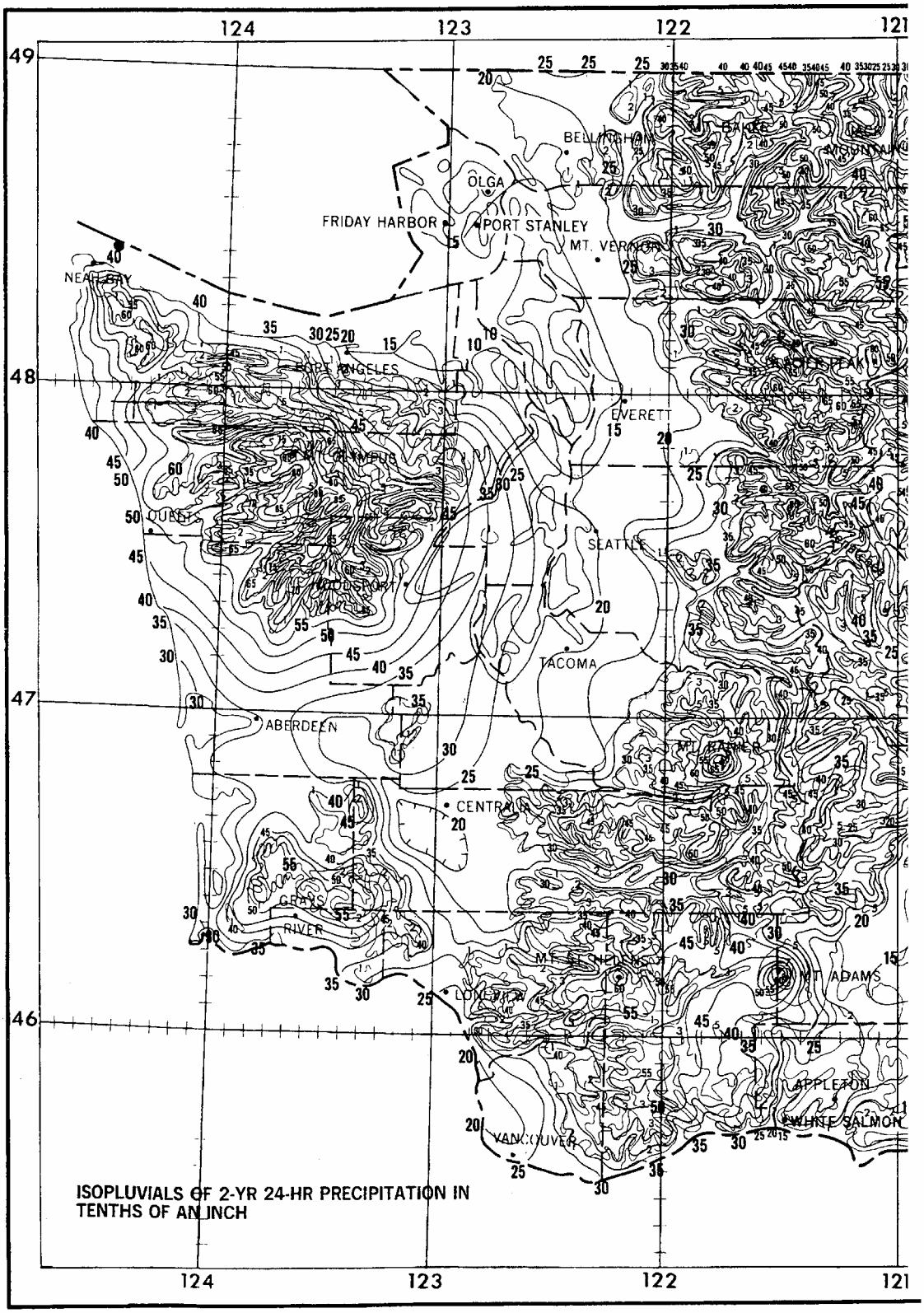

Western Washington Isopluvial 10-year, 24 hour

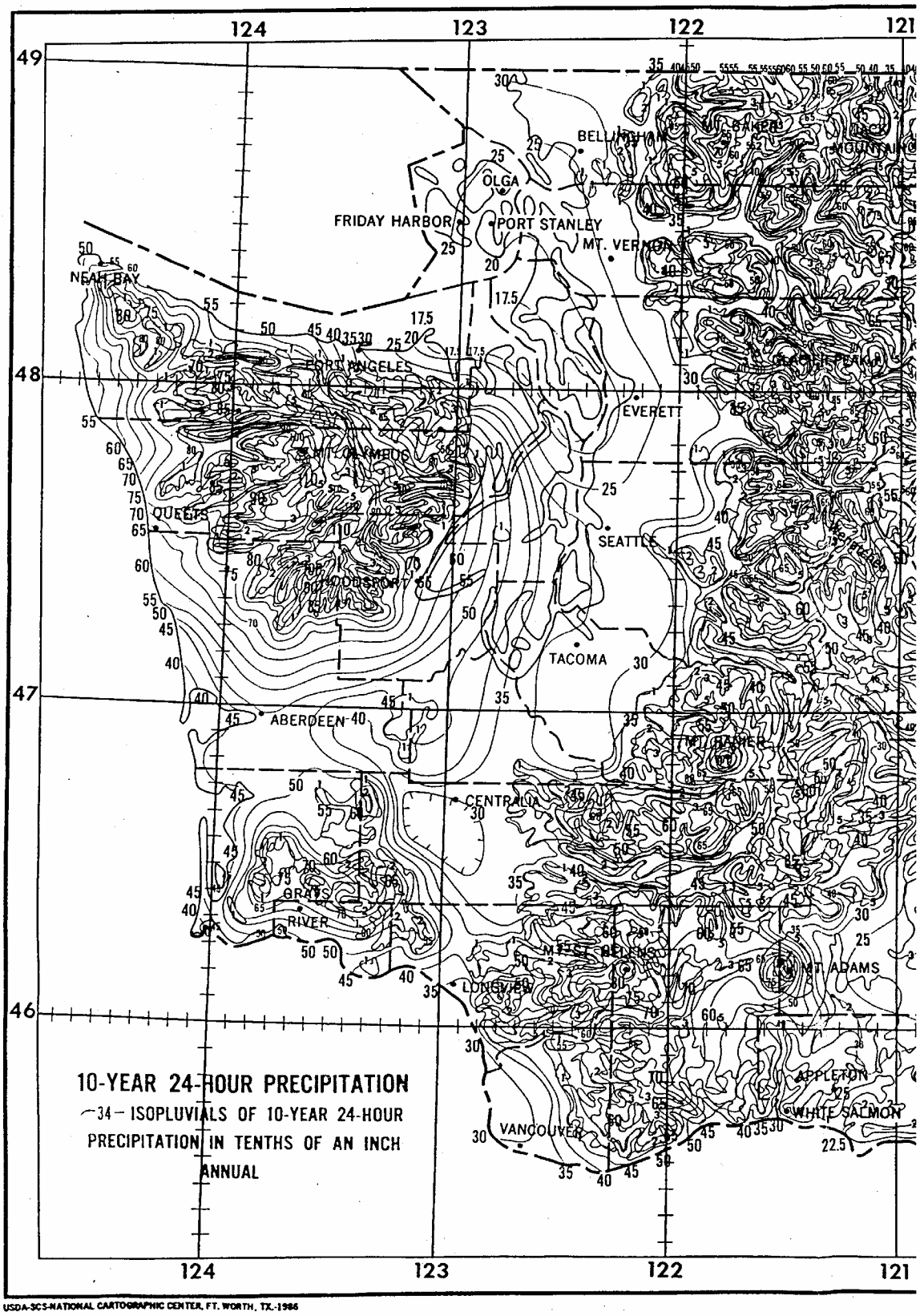

Western Washington Isopluvial 100-year, 24 hour

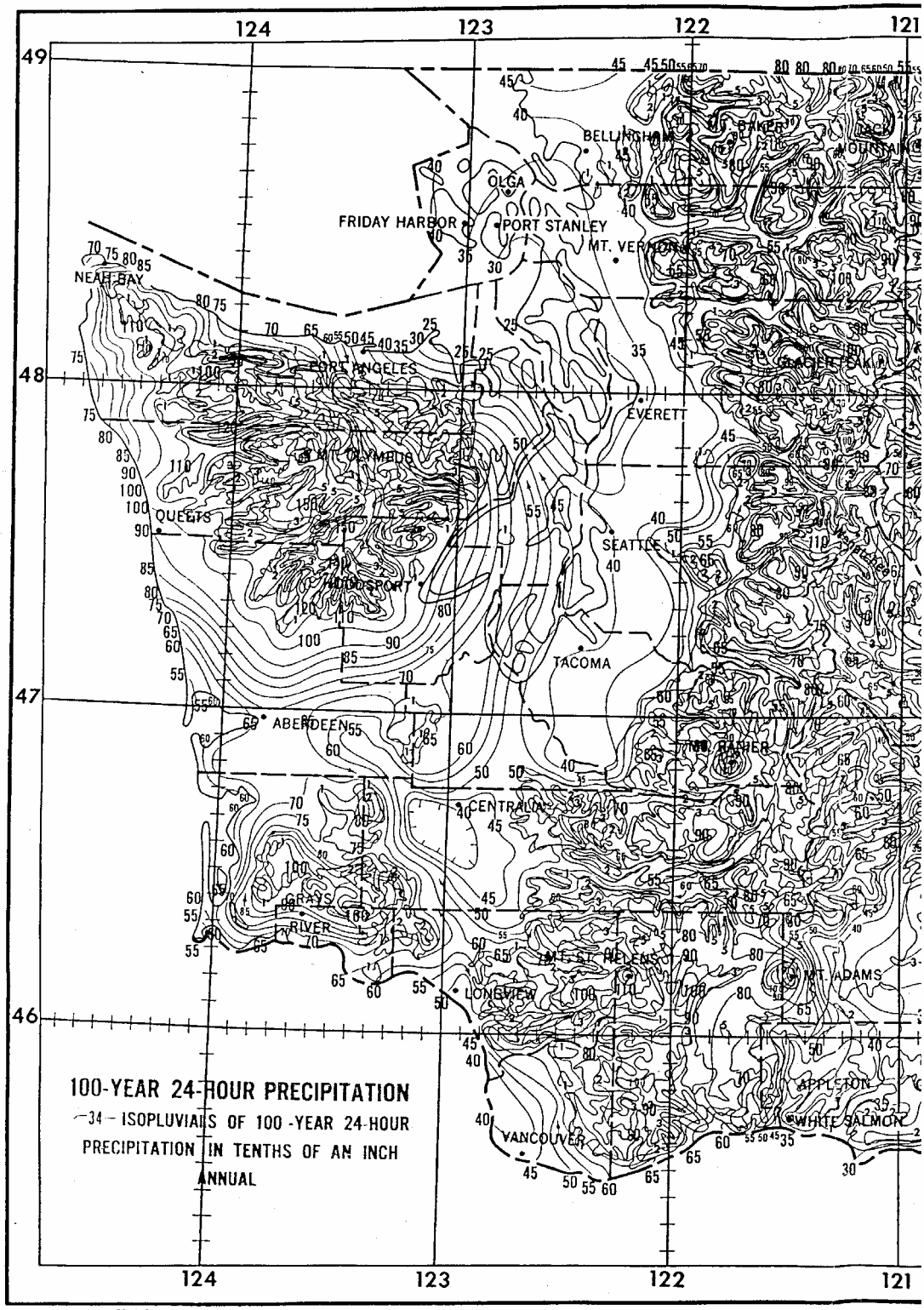

Appendix III-B
Western Washington Hydrology Model – Information, Assumptions, and Computation Steps

The information and assumptions used in the Western Washington Hydrology Model (WWHM) are described in this document.

WWHM Limitations

The WWHM has been created for the specific purpose of sizing stormwater control facilities for new development and redevelopment projects in Western Washington. The WWHM can be used for a range of conditions and developments; however, certain limitations are inherent in this software. These limitations are described below.

The WWHM uses the EPA HSPF software program to do all of the rainfall-runoff and routing computations. Therefore, HSPF limitations are included in the WWHM. For example, backwater or tailwater control situations are not explicitly modeled by HSPF. This is also true in the WWHM.

In addition, the WWHM is limited in its routing capabilities. The user is allowed to input multiple stormwater control facilities and runoff is routed through them. If the proposed development site involves routing through a natural lake or wetland in addition to multiple stormwater control facilities then the user should use HSPF to do the routing computations and additional analysis.

Routing effects become more important as the drainage area increases. For this reason it is recommended that the WWHM not be used for drainage areas greater than one-half square mile (320 acres). The WWHM can be used for small drainage areas down to less than an acre in size.

WWHM Information and Assumptions

1. Precipitation data.

<u>Length of record.</u>

The WWHM uses long-term (43-50 years) precipitation data to simulate the potential impacts of land use development in western Washington. A minimum period of 20 years is required to simulate enough peak flow events to produce accurate flow frequency results. A 40 to 50-year record is preferred. The actual length of record of each precipitation station varies, but all exceed 43 years.

<u>Rainfall distribution.</u>

The precipitation data are representative of the different rainfall regimes found in western Washington. A total of 17 precipitation stations are used. These stations represent rainfall at elevations below 1500 feet. Snowfall and melt are not included in the WWHM.

The primary source for precipitation data is National Weather Service stations. The secondary source is precipitation data collected by local jurisdictions. During development of WWHM, county engineers at 19 western Washington counties were contacted to obtain local precipitation data. Only King County provided local data.

The following precipitation stations have been included in the WWHM:

Precipitation Station	Years of Data	County Coverage
Astoria, OR	1955-1998 = 43	Wahkiakum
Blaine	1948-1998 = 50	Whatcom, San Juan
Burlington	1948-1998 = 50	Skagit, Island
Clearwater	1948-1998 = 50	Jefferson (west)
Darrington	1948-1996 = 48	Snohomish (northeast)
Everett	1948-1996 = 48	Snohomish (excluding northeast)
Frances	1948-1998 = 50	Pacific
Landsburg	1948-1997 = 49	King (east)
Longview	1955-1998 = 43	Cowlitz, Lewis (south)
McMillian	1948-1998 = 50	Pierce
Montesano	1955-1998 = 43	Grays Harbor
Olympia	1955-1998 = 43	Thurston, Mason (south), Lewis (north)
Port Angeles	1948-1998 = 50	Clallam (east)
Portland, OR	1948-1998 = 50	Clark, Skamania
Quilcene	1948-1998 = 50	Jefferson (east), Mason (north), Kitsap
Sappho	1948-1998 = 50	Clallam (west)
SeaTac	1948-1997 = 49	King (west)

The records were reviewed for length, quality, and completeness of record. Annual totals were checked along with hourly maximum totals. Using these checks, data gaps and errors were corrected, where possible. A "Quality of Record" summary was produced for each precipitation record reviewed.

The reviewed and corrected data were placed in multiple WDM (Watershed Data Management) files. One WDM file was created per county and contains all of the precipitation data to be used by the WWHM for that particular county. A local government that believes that it has a more accurate precipitation record to use with the WWHM should petition Ecology to allow use of that record, and to possibly incorporate that record into the WWHM. This may be more easily done in the future if the WWHM is upgraded to allow use of custom precipitation time series.

Computational time step.

The computational time step used in the WWHM is one hour. The one-hour time step was selected to better represent the temporal variability of actual precipitation than daily data.

Based on more frequent (15-minute) rain data collected over 25 years in Seattle, a relationship has been developed and incorporated in WWHM for converting the 60-minute water quality design flows to 15-minute flows. The 15-minute water quality design flows are more appropriate and must be used for design of water quality treatment facilities that are expected to have a hydraulic residence time of less than one hour.

2. Precipitation multiplication factors.

Precipitation multiplication factors increase or decrease recorded precipitation data to better represent local rainfall conditions. This is particularly important when the precipitation gage is located some distance from the study area.

Precipitation multiplication factors were developed for western Washington. The factors are based on the ratio of the 24-hour, 25-year rainfall intensities for the representative precipitation gage and the surrounding area represented by that gage's record. The 24-hour, 25-year rainfall intensities were determined from the NOAA Atlas 2 (*Precipitation-Frequency Atlas of the Western United States, Volume IX – Washington, 1973*).

These multiplication factors were created for the Puget Sound lowlands plus all western Washington valleys and hillside slopes below 1500 feet elevation. The factors were placed in the WWHM database and linked to each county's map. They are transparent to the general user. The advanced user will have the ability to change the precipitation multiplication factor for a specific site. However, such changes will be recorded in the WWHM output.

3. Pan evaporation data.

Pan evaporation data are used to determine the potential evapotranspiration (PET) of a study area. Actual evapotranspiration (AET) is computed by the WWHM based on PET and available moisture supply. AET accounts for the precipitation that returns to the atmosphere without becoming runoff. Soil moisture conditions and runoff are directly influenced by PET and AET.

Evaporation is not highly variable like rainfall. Puyallup pan evaporation data are used for all of the 19 western Washington counties.

Pan evaporation data were assembled and checked for the same time period as the precipitation data and placed in the appropriate county WDM files.

Pan evaporation data are collected in the field, but PET is used by the WWHM. PET is equal to pan evaporation times a pan evaporation coefficient. Depending on climate, pan evaporation coefficients for western Washington range from 0.72 to 0.82.

NOAA Technical Report NWS 33, *Evaporation Atlas for the Contiguous 48 United States*, was used as the source for the pan evaporation coefficients. Pan evaporation coefficient values are shown on Map 4 of that publication.

As with the precipitation multiplication factors, the pan evaporation coefficients have been placed in the WWHM database and linked to each county's map. They will be transparent to the general user. The advanced user will have the ability to change the coefficient for a specific site. However, such changes will be recorded in the WWHM output.

4. Soil data.

Soil type, along with vegetation type, greatly influences the rate and timing of the transformation of rainfall to runoff. Sandy soils with high infiltration rates produce little or no surface runoff; almost all runoff is from groundwater. Soils with a compressed till layer slowly infiltrate water and produce larger amounts of surface runoff during storm events.

The WWHM uses three predominate soil type to represent the soils of western Washington: till, outwash, and saturated

Till soils have been compacted by glacial action. Under a layer of newly formed soil lies a compressed soil layer commonly called "hardpan". This hardpan has very poor infiltration capacity. As a result, till soils produce a relatively large amount of surface runoff and interflow. A typical example of a till soil is an Alderwood soil (SCS class C).

Outwash soils have a high infiltration capacity due to their sand and gravel composition. Outwash soils have little or no surface runoff or interflow. Instead, almost of their runoff is in the form of groundwater. An Everett soil (SCS class A) is a typical outwash soil.

Outwash soils over high groundwater or an impervious soil layer have low infiltration rates and act like till soils. Where groundwater or an impervious soil layer is within 5 feet from the surface, outwash soils may be modeled as till soils in the WWHM.

Saturated soils are usually found in wetlands. They have a low infiltration rate and a high groundwater table. When dry, saturated soils have a high storage capacity and produce very little runoff. However, once they become saturated they produce surface runoff, interflow, and groundwater in large quantities. Mukilteo muck (SCS class D) is a typical saturated soil.

The user will be required to investigate actual local soil conditions for the specific development planned. The user will then input the number of acres of outwash (A/B), till (C), and saturated (D) soils for the site conditions.

Alluvial soils are found in valley bottoms. These are generally fine-grained and often have a high seasonal water table. There has been relatively little experience in calibrating the HSPF

model to runoff from these soils, so in the absence of better information, these soils may be modeled as till soils.

Additional soils will be included in the WWHM if appropriate HSPF parameter values are found to represent other major soil groups.

The three predominate soil types are represented in the WWHM by specific HSPF parameter values that represent the hydrologic characteristics of these soils. More information on these parameter values is presented below.

5. Vegetation data.

As with soil type, vegetation types greatly influence the rate and timing of the transformation of rainfall to runoff. Vegetation intercepts precipitation, increases its ability to percolate through the soil, and evaporates and transpires large volumes of water that would otherwise become runoff.

The WWHM will represent the vegetation of western Washington with three predominate vegetation categories: forest, pasture, and lawn (also known as grass).

Forest vegetation represents the typical second growth Douglas fir found in the Puget Sound lowlands. Forest has a large interception storage capacity. This means that a large amount of precipitation is caught in the forest canopy before reaching the ground and becoming available for runoff. Precipitation intercepted in this way is later evaporated back into the atmosphere. Forest also has the ability to transpire moisture from the soil via its root system. This leaves less water available for runoff.

Pasture vegetation is typically found in rural areas where the forest has been cleared and replaced with shrub or grass lots. Some pasture areas may be used to graze livestock. The interception storage and soil evapotranspiration capacity of pasture are less than forest. Soils may have also been compressed by mechanized equipment during clearing activities. Livestock can also compact soil. Pasture areas typically produce more runoff (particularly surface runoff and interflow) than forest areas.

Lawn vegetation is representative of the suburban vegetation found in typical residential developments. Soils have been compacted by earth moving equipment, often with a layer of topsoil removed. Sod and ornamental bushes replace native vegetation. The interception storage and evapotranspiration of lawn vegetation is less than pasture. More runoff results.

Predevelopment default land conditions are forest, although the user has the option of specifying pasture if there is documented evidence that pasture vegetation was native to the predevelopment site. If this option is used, the change will be recorded in the WWHM output.

Forest vegetation is represented by specific HSPF parameter values that represent the forest hydrologic characteristics. As described above, the existing regional HSPF parameter values for forest are based on undisturbed second-growth Douglas fir forest found today in western Washington lowland watersheds.

Postdevelopment vegetation will reflect the new vegetation planned for the site. The user has the choice of forest, pasture, and landscaped vegetation. Forest and pasture are only appropriate for postdevelopment vegetation in parcels separate from standard residential or non-standard residential/commercial. Development areas must only be designated as forest or pasture where legal restrictions can be documented that protect these areas from future disturbances. The WWHM assumes the pervious land portion of developed areas is covered with lawn vegetation, as described above.

6. Development land use data.

The WWHM user must enter land use information for the pre-developed condition and the proposed development condition into the model. There are 6 basic land use categories and 3 soil types available in the WWHM2. The land use categories are: Impervious Area (Roof), Streets/Sidewalks/Parking, Landscaped Area (this includes lawn, garden, areas with ornamental plants, and any natural areas not legally protected from future disturbance)), Forest, Pasture, and Pond. The soils types are A/B (outwash), C/D (Till), and Saturated (wetland).

Forest and pasture vegetation areas are only appropriate for separate undeveloped parcels dedicated as open space, wetland buffer, or park within the total area of the standard residential development. ***Development areas must only be designated as forest or pasture where legal restrictions can be documented that protect these areas from future disturbances*.**

Impervious, as the name implies, allows no infiltration of water into the pervious soil. All runoff is surface runoff. Impervious land typically consists of paved roads, sidewalks, driveways, and parking lots. Roofs are also impervious.

For the purposes of hydrologic modeling, only effective impervious area is categorized as impervious. Effective impervious area (EIA) is the area where there is no opportunity for surface runoff from an impervious site to infiltrate into the soil before it reaches a conveyance system (pipe, ditch, stream, etc.). An example of an EIA is a shopping center parking lot where the water runs off the pavement and directly goes into a catch basin where it then flows into a pipe and eventually to a stream. In contrast, some homes with impervious roofs collect the roof runoff into roof gutters and send the water down downspouts. When the water reaches the base of the downspout it can be directed either into a pipe (which is connected to the local storm sewer), dumped onto a splash block, or directed into a dispersion trench. Roof water sent to a dispersion trench has the opportunity to spread out into the yard and soak into the soil. Such roofs are not considered to be effective impervious area if the criteria in Section 3.1.2. are met (see below for more information).

The non-effective impervious area uses the adjacent or underlying soil and vegetation properties. Vegetation often varies by the type of land use. The assumption is made in the WWHM that the EIA equals the TIA (total impervious area). This is consistent with King County's determination of EIA acres for new developments. Where appropriate, the TIA can be reduced through the use of runoff credits (more on that below).

In addition, WWHM2 offers the following 2 optional features:

Standard Residential: For housing developments where lot-specific details (e.g., size of roof and driveway) are not yet determined, the WWHM provides a set of default assumptions about the amount of impervious area per lot and its division between driveways and rooftops Ecology has selected a standard impervious area of 4200 square feet per residential lot, with 1000 square feet of that as driveway, walkways, and patio area, and the remainder as rooftop area. The rest of the lot acres will be assumed to be landscaped area (including lawn). The user inputs the number of residential lots and the total acreage of the residential lots (public right-of-way acreages and non-residential lot acreages excluded). The number of residential lots and the associated number of acres will be used to compute the average number of residential lots per acre. This value together with the number of residential lots and the impervious area in the public right-of-way will be used by the model to calculate the TIA for the proposed development. The areas covered by streets, parking areas, and sidewalk areas are input separately by the user.

Runoff Credits: Runoff credits can be obtained using any or all of the low impact development methods listed below. The WWHM2 has an automated procedure for taking credits for infiltrating or dispersing roof runoff - methods #1 and #2 below. Credits for using methods 4, 6, 7, and 8 must be taken by following the guidance in Appendix C. Roof areas using method #5 - rainwater harvesting systems designed in accordance with the guidance in Appendix C need not be entered into the model. Also, if using method 9 – Full dispersion – the runoff model need not be used for the area that meets the criteria in Appendix C.

1. Infiltrate roof runoff
2. Disperse roof runoff
3. Porous pavement for driveways and walks
4. Vegetated Roofs
5. Rainwater Harvesting
6. Reverse slope sidewalks
7. Low impact foundations
8. Rain Gardens (Bioretention Areas)
9. Full dispersion

1. Infiltrate Roof Runoff

Credit is given for disconnecting the roof runoff from the development's stormwater conveyance system and infiltrating on the individual residential lots. The WWHM assumes that this infiltrated roof runoff does not contribute to the runoff flowing to the stormwater detention pond site. It disappears from the system and does not have to be mitigated. See Section 3.1.1. of Volume III for design requirements for downspout infiltration systems.

2. Disperse Roof Runoff

Credit is also given for disconnecting the roof runoff from the development's stormwater conveyance system and dispersing it on the surface of individual lots. If the runoff is dispersed using a dispersion trench designed according to the requirements of Section 3.1.2. of Volume III, on single-family lots greater than 22,000 square feet, and the vegetative flow path of the runoff is 50 feet or longer through undisturbed native or compost-amended soils, the roof area can be entered into the model as landscaped area rather than impervious surface.

3. Porous pavement for driveways and walks

The third option for runoff credit is the use of porous pavement for private driveways, sidewalks, streets, and parking areas. The WWHM2 currently includes an option for obtaining credits for the use of porous pavements on Streets/Sidewalk/Parking. The credit given under this option is believed to be too small. a Until such time as WWHM2 is upgraded to WWHM3, the LID credit guidance in Appendix C should be followed. It will direct you to enter a certain percentage of the pervious pavement area into the landscaped area category rather than the street/sidewalk/parking lot category.

Similar procedures should be followed for vegetated roofs, reverse slope sidewalks, and low impact foundations. The LID credit guidance of Appendix C directs how these surfaces should be entered into the model. If you do not know the specific quantities of the different land cover types for your development (e.g., the individual lots will be sold to builders who will determine layout and size of home), you should start with the assumption of 4200 sq. ft. of impervious area per lot – including 1,000 sq. ft. for driveways, and begin making adjustments in those totals as allowed in the LID guidance of Appendix C

Other Development Options and Model Features

The WWHM allows the flexibility of bypassing a portion of the development area around a flow control facility and/or having offsite inflow that is entering the development area pass through the flow control facility.

Bypass occurs when a portion of the development does not drain to a stormwater detention facility. Onsite runoff from a proposed development project may bypass the flow control facility provided that all of the following conditions are met.

1. Runoff from both the bypass area and the flow control facility converges within a quarter-mile downstream of the project site discharge point, and
2. The flow control facility is designed to compensate for the uncontrolled bypass area such that the net effect at the point of convergence downstream is the same with or without bypass, and
3. The 100-year peak discharge from the bypass area will not exceed 0.4 cfs, and
4. Runoff from the bypass area will not create a significant adverse impact to downstream drainage systems or properties, and
5. Water quality requirements applicable to the bypass area are met.

Offsite Inflow occurs when an upslope area outside the development drains to the flow control facility in the development. If the existing 100-year peak flow rate from any upstream offsite area is greater than 50% of the 100-year developed peak flow rate (undetained) for the project site, then the runoff from the offsite area must not flow to the onsite flow control facility. The bypass of offsite runoff must be designed so as to achieve the following:

1. Any existing contribution of flows to an onsite wetland must be maintained, and
2. Offsite flows that are naturally attenuated by the project site under predeveloped conditions must remain attenuated, either by natural means or by providing additional onsite detention so that peak flows do not increase.

Application of WWHM in Re-developments Projects

WWHM allows only forest or pasture as the predevelopment land condition in the Design Basin screen. This screen does not allow other types of land uses such as impervious and landscaped areas to be entered for existing condition. However, WWHM can be used for redevelopment projects by modeling the existing developed areas that are not subject to the flow control requirements of Volume I as offsite areas. For the purposes of predicting runoff from such an existing developed area, enter the existing area in the Offsite Inflow screen. This screen is designed to predict runoff from impervious and landscaped areas in addition to the forest and pasture areas. If the existing 100-year peak flow rate from the existing developed areas that are not subject to flow control is greater than 50% of the 100-year developed peak flow rate (undetained but subject to the flow control requirements of Volume I), then the runoff from the offsite area must not be allowed to flow to the onsite flow control facility.

7. PERLND and IMPLND parameter values.

In WWHM (and HSPF) pervious land categories are represented by PERLNDs; impervious land categories (EIA) by IMPLNDs. An example of a PERLND is a till soil covered with forest vegetation. This PERLND has a unique set of HSPF parameter values. For each PERLND there are 16 parameters that describe various hydrologic factors that influence runoff. These range from interception storage to infiltration to active groundwater evapotranspiration. Only four parameters are required to represent IMPLND.

The PERLND and IMPLND parameter values to be used in the WWHM are listed below. These values are based on regional parameter values developed by the U.S. Geological Survey for watersheds in western Washington (Dinicola, 1990) plus additional HSPF modeling work conducted by AQUA TERRA Consultants.

PERLND Parameters

	TF	TP	TL	OF	OP	OL	SF	SP	SL
Name									
LZSN	4.5	4.5	4.5	5.0	5.0	5.0	4.0	4.0	4.0
INFILT	0.08	0.06	0.03	2.0	1.6	0.80	2.0	1.8	1.0
LSUR	400	400	400	400	400	400	100	100	100
SLSUR	0.10	0.10	0.10	0.10	0.10	0.10	0.001	0.001	0.001
KVARY	0.5	0.5	0.5	0.3	0.3	0.3	0.5	0.5	0.5
AGWRC	0.996	0.996	0.996	0.996	0.996	0.996	0.996	0.996	0.996
INFEXP	2.0	2.0	2.0	2.0	2.0	2.0	10.0	10.0	10.0
INFILD	2.0	2.0	2.0	2.0	2.0	2.0	2.0	2.0	2.0
BASETP	0.0	0.0	0.0	0.0	0.0	0.0	0.0	0.0	0.0
AGWETP	0.0	0.0	0.0	0.0	0.0	0.0	0.7	0.7	0.7
CEPSC	0.20	0.15	0.10	0.20	0.15	0.10	0.18	0.15	0.10
UZSN	0.5	0.4	0.25	0.5	0.5	0.5	3.0	3.0	3.0
NSUR	0.35	0.30	0.25	0.35	0.30	0.25	0.50	0.50	0.50
INTFW	6.0	6.0	6.0	0.0	0.0	0.0	1.0	1.0	1.0
IRC	0.5	0.5	0.5	0.7	0.7	0.7	0.7	0.7	0.7
LZETP	0.7	0.4	0.25	0.7	0.4	0.25	0.8	0.8	0.8

PERLND types:

TF = Till Forest
TP = Till Pasture
TL = Till Lawn
OF = Outwash Forest
OP = Outwash Pasture
OL = Outwash Lawn
SF = Saturated Forest
SP = Saturated Pasture
SL = Saturated Lawn

PERLND parameters:

LZSN = lower zone storage nominal (inches)
INFILT = infiltration capacity (inches/hour)
LSUR = length of surface overland flow plane (feet)
SLSUR = slope of surface overland flow plane (feet/feet)
KVARY = groundwater exponent variable ($inch^{-1}$)
AGWRC = active groundwater recession constant (day^{-1})
INFEXP = infiltration exponent
INFILD = ratio of maximum to mean infiltration
BASETP = base flow evapotranspiration (fraction)
AGWETP = active groundwater evapotranspiration (fraction)
CEPSC = interception storage (inches)
UZSN = upper zone storage nominal (inches)
NSUR = roughness of surface overland flow plane (Manning's n)
INTFW = interflow index
IRC = interflow recession constant (day-1)
LZETP = lower zone evapotranspiration (fraction)

A more complete description of these PERLND parameters is found in the HSPF User Manual (Bicknell et al, 1997).

PERLND parameter values for other additional soil/vegetation categories will be investigated and added to the WWHM, as appropriate.

IMPLND Parameters

	EIA
Name	
LSUR	400
SLSUR	0.01
NSUR	0.10
RETSC	0.10

IMPLND parameters:

LSUR = length of surface overland flow plane (feet)

SLSUR = slope of surface overland flow plane (feet/feet)

NSUR = roughness of surface overland flow plane (Manning's n)

RETSC = retention storage (inches)

A more complete description of these IMPLND parameters is found in the HSPF User Manual (Bicknell et al, 1997).

The PERLND and IMPLND parameter values will be transparent to the general user. The advanced user will have the ability to change the value of a particular parameter for that specific site. However, such changes will be recorded in the WWHM output.

Surface runoff and interflow will be computed based on the PERLND and IMPLND parameter values. Groundwater flow can also be computed and added to the total runoff from a development if there is a reason to believe that groundwater would be surfacing (such where there is a cut in a slope). However, the default condition in WWHM assumes that no groundwater flow from small catchments reaches the surface to become runoff. This is consistent with King County procedures (King County, 1998).

8. Guidance for flow control standards.

Flow control standards are used to determine whether or not a proposed stormwater facility will provide a sufficient level of mitigation for the additional runoff from land development. Guidance is provided on the standards that must be met to comply with the Ecology Stormwater Management Manual.

There are two flow control standards stated in the Ecology Manual: Minimum Requirement #7 - Flow Control and Minimum Requirement #8 - Wetlands Protection (See Volume I). Minimum Requirement #7 specifies flow frequency and flow duration ranges for which the postdevelopment runoff cannot exceed predevelopment runoff. Minimum Requirement #8 specifies that discharges to wetlands must maintain the hydrologic conditions, hydrophytic vegetation, and substrate characteristics necessary to support existing and designated beneficial uses.

Minimum Requirement #7 specifies that stormwater discharges to streams shall match developed discharge durations to predeveloped durations for the range of predeveloped discharge rates from 50% of the 2-year peak flow up to the full 50-year peak flow. In general, matching discharge durations between 50% of the 2-year and 50-year will result in matching the peak discharge rates in this range.

The WWHM uses the predevelopment peak flow value for each water year to compute the predevelopment 2- through 100-year flow frequency values. The postdevelopment runoff 2- through 100-year flow frequency values are computed from the outlet of the proposed stormwater facility. The user must enter the stage-surface area-storage-discharge table (HSPF FTABLE) for the stormwater facility. The model then routes the postdevelopment runoff through the stormwater facility. As with the predevelopment peak flow values, the maximum developed flow value for each water year will be selected by the model to compute the developed 2- through 100-year flow frequency.

The actual flow frequency calculations are made using the federal standard Log Pearson Type III distribution described in Bulletin 17B (United States Water Resources Council, 1981). This standard flow frequency distribution is provided in U.S. Geological Survey program J407,

version 3.9A-P, revised 8/9/89. The Bulletin 17B algorithms in program J407 are included in the WWHM calculations.

Minimum Requirement #7 is based on flow duration. The WWHM will use the entire predevelopment and postdevelopment runoff record to compute flow duration. The standard requires that postdevelopment runoff flows must not exceed the flow duration values of the predevelopment runoff between the predevelopment flow values of 50 percent of the 2-year flow and 100 percent of the 50-year flow.

Flow duration is computed by counting the number of flow values that exceed a specified flow level. The specified flow levels used by WWHM in the flow duration analysis are listed below.

1. 50% of the 2-year predevelopment peak flow.
2. 100% of the 2-year predevelopment peak flow.
3. 100% of the 50-year predevelopment peak flow.

In addition, flow durations are computed for 97 other incremental flow values between 50 percent of the 2-year predevelopment peak flow and 100 percent of the 50-year predevelopment peak flow.

There are three criteria by which flow duration values are compared:

1. If the postdevelopment flow duration values exceed any of the predevelopment flow levels between 50% and 100% of the 2-year predevelopment peak flow values (100 Percent Threshold) then the flow duration requirement has not been met.
2. If the postdevelopment flow duration values exceed any of the predevelopment flow levels between 100% of the 2-year and 100% of the 50-year predevelopment peak flow values more than 10 percent of the time (110 Percent Threshold) then the flow duration requirement has not been met.
3. If more than 50 percent of the flow duration levels exceed the 100 percent threshold then the flow duration requirement has not been met.

The results are provided in the WWHM report.

Minimum Requirement #8 specifies that discharges to wetlands must maintain the hydrologic conditions, hydrophytic vegetation, and substrate characteristics necessary to support existing and designated beneficial uses. Criteria for determining maximum allowed exceedences in alterations to wetland hydroperiods are provided in guidelines cited in Guide Sheet 2B of the Puget Sound Wetland Guidelines (Azous and Horner, 1997).

Because wetland hydroperiod computations are relatively complex and are site specific, they have not yet been included in the WWHM2. HSPF is required for wetland hydroperiod analysis. Ecology intends to include the ability to perform hydroperiod computations in WWHM3.

WWHM Computation Steps: For sizing a detention pond. Follow steps under Quick Start in WWHM2 under Help/Contents. These are also reproduced below:

Quick Start

Here is a brief set of steps to demonstrate pond sizing using the WWHM2.

1. On the map screen (the first screen that shows up) click somewhere within the county boundaries.

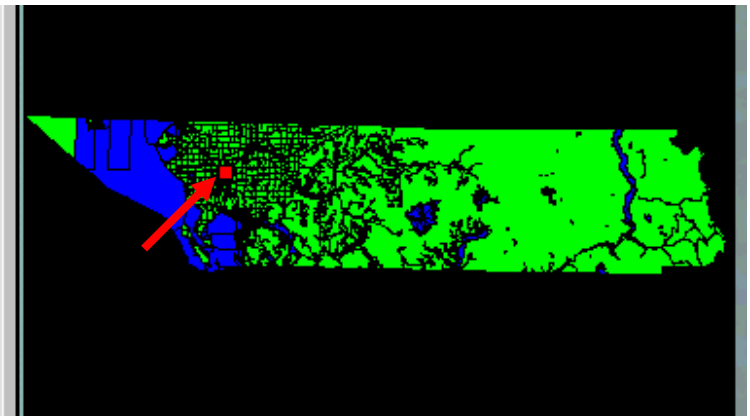

Tool bar

2. On the Tool bar (above the map screen) click the second button to switch to the Scenario Editor.

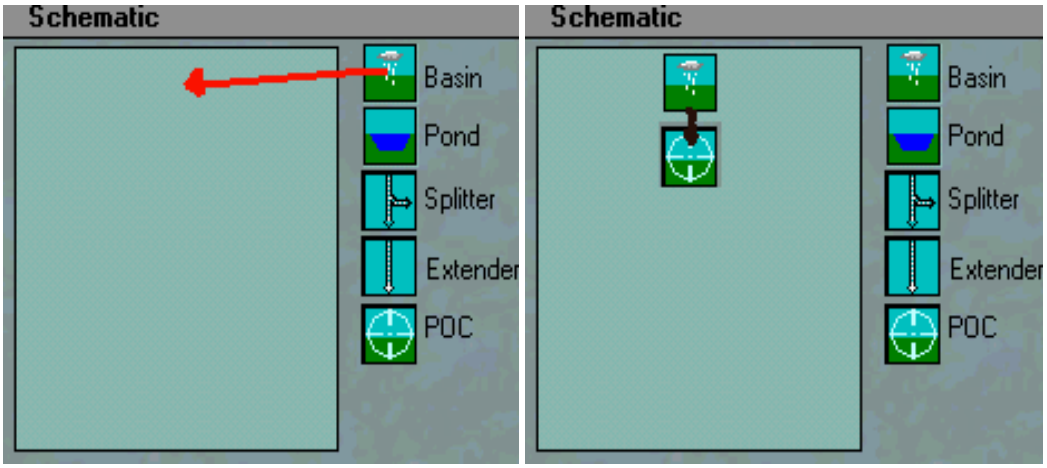

Schematic

3. Drag and drop the Basin Icon somewhere towards the top of the Schematic. You should then have a basin in your schematic flowing to the Point of Compliance (POC) The POC represents outflow or the sum of all flow from your project.

4. Left click on the basin you just added. This will open a window on the right where you can enter land use for this basin.

Basin Information

5. Enter 10 acres in the field for Till Forest, and then click the Update button. You have now set your pre-developed conditions to 10 acres of Till Forest.

Change Scenarios

6. Now press the Developed Unmitigated button just below the schematic. Now you can enter basins and land use for your Developed unmitigated Scenario.

Now drag and drop a basin as you did in step 3. Click on it to enter land use as in step 4. This time instead of 10 acres of till forest, enter:

5 acres of Streets/Sidewalks/Parking.
3 acres of Landscaped Area.
1 acre of Impervious Area (Roof).
1 acre of Pond.

Be sure it's all in the middle column indicating it's on till soils as in the pre-developed Scenario. The screen should look like this:

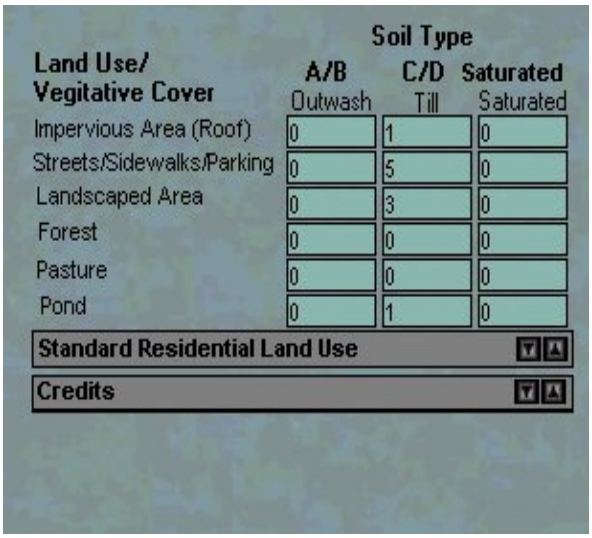

Land Use/ Vegitative Cover	Soil Type A/B Outwash	C/D Till	Saturated Saturated
Impervious Area (Roof)	0	1	0
Streets/Sidewalks/Parking	0	5	0
Landscaped Area	0	3	0
Forest	0	0	0
Pasture	0	0	0
Pond	0	1	0

Standard Residential Land Use

Credits

Developed Land Use

Then click the update button.

4. Now click the Developed Mitigated button below the schematic. This brings you to the final Scenario where your detention facility will be placed. Notice that your Developed basin is already there. Now drag and drop a pond into the space just below the basin. The schematic should look like this:

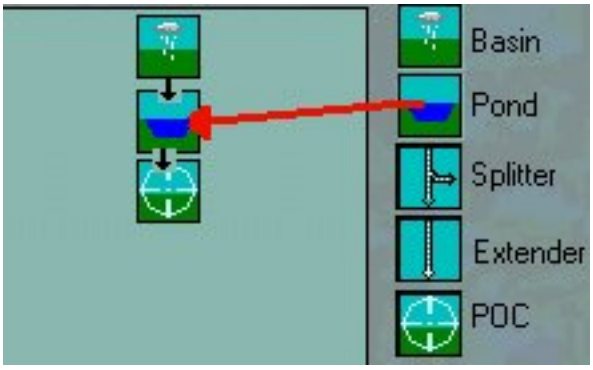

Drag and drop a pond

8. Click on the pond to open the pond-editing window. You can edit any aspect of the pond from here, but for now, just click the Auto Pond button at the bottom. This will open up the **Pond Wizard** window.

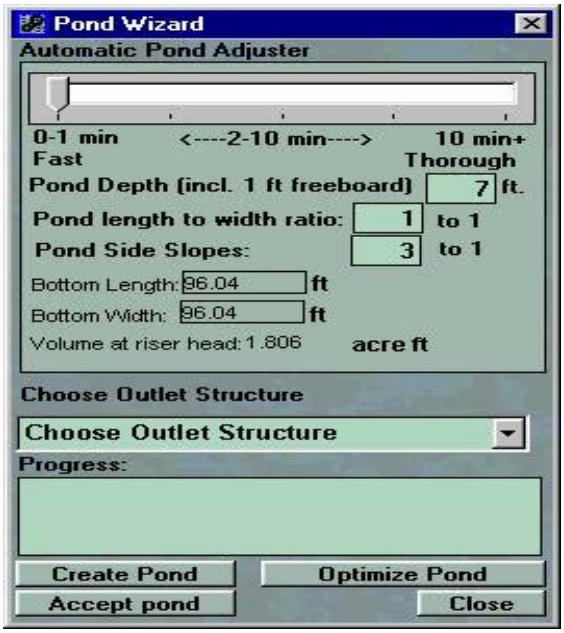

Pond Wizard

First choose an outlet structure from the drop-down list in the middle of the Pond Wizard form. Select the first option (1 Orifice & Rectangular Notch).

Next, press the Create Pond button. You will see a progress bar pop up to indicate that HSPF is running the model and the pond wizard is creating a pond according to the results.

9. The Pond Wizard will then automatically bring you to the **Run Model** screen.

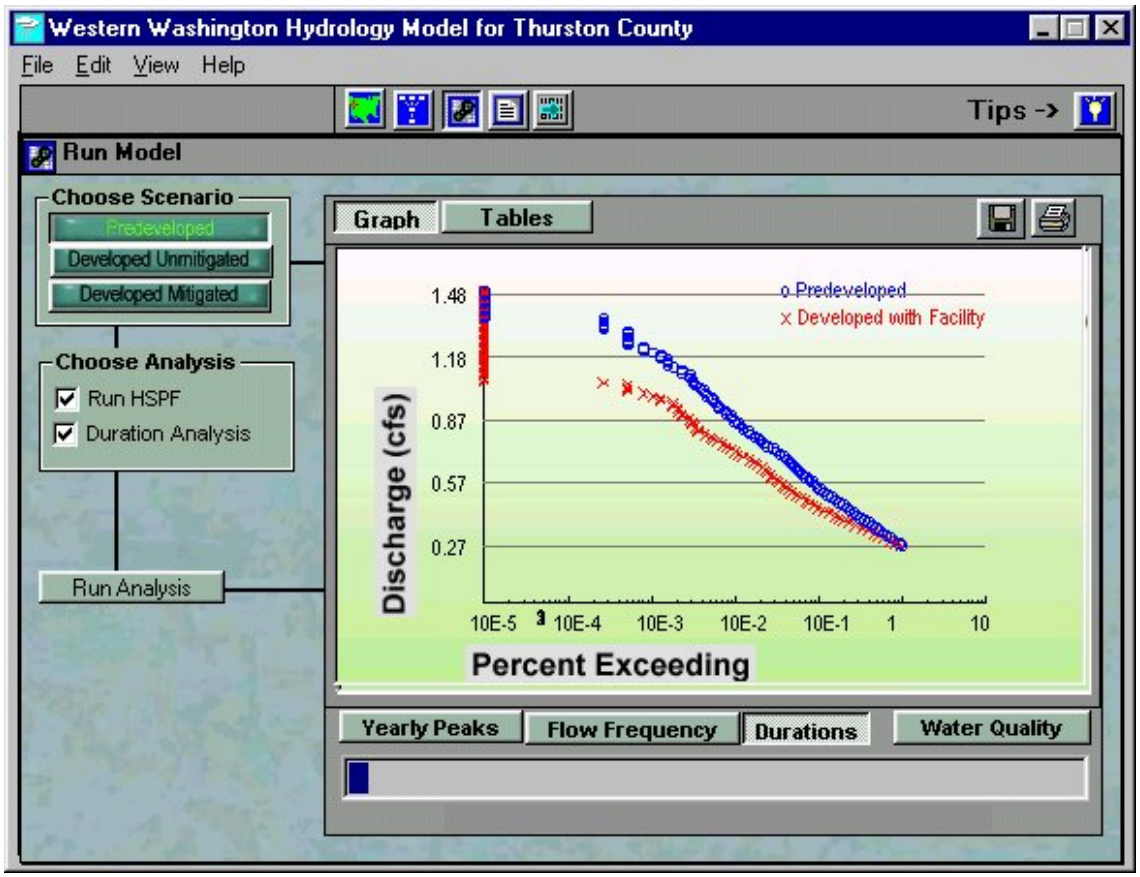

Run Model Screen

You can view the results in graphs or tables. For yearly peaks, select a scenario to view (upper left) and click the yearly peaks button. Flow frequency and durations always show pre-developed vs. developed mitigated.

If you wish to change the pond and re-run the model, take the following steps:

Go back to the Scenario editor (2nd Tool bar button).
Chose the Developed Mitigated Scenario.
Click on your pond.
Change one or more pond values and click Update.
Go back to the Run Model screen (3rd Tool bar button).
Chose the developed mitigated Scenario.
Check the Run HSPF and Duration Analysis check boxes.
Click Run Analysis.

References for Western Washington Hydrology Model

Beyerlein, D.C. 1996. Effective Impervious Area: The Real Enemy. Presented at the Impervious Surface Reduction Research Symposium, The Evergreen State College. Olympia, WA.

Bicknell, B.R., J.C. Imhoff, J.L. Kittle Jr, A.S. Donigian Jr, and R.C. Johanson. 1997. Hydrological Simulation Program – Fortran User's Manual for Version 11. EPA/600/R-97/080. National Exposure Research Laboratory. Office of Research and Development. U.S. Environmental Protection Agency. Research Triangle Park, NC.

Dinicola, R.S. 1990. Characterization and Simulation of Rainfall-Runoff Relations for Headwater Basins in Western King and Snohomish Counties, Washington. Water-Resources Investigations Report 89-4052. U.S. Geological Survey. Tacoma, WA.

King County. 1998. Surface Water Design Manual. Department of Natural Resources. Seattle, WA.

United States Water Resources Council. 1981. Guidelines for Determining Flood Flow Frequency. Bulletin #17B of the Hydrology Committee. Washington, DC.

Appendix III-C
Washington State Department of Ecology Low Impact Development Design and Flow Modeling Guidance

The Washington State Department of Ecology (Ecology) encourages the use of the Western Washington Hydrology Model (WWHM) and other approved runoff models (currently approved alternative models are the King County Runoff Time Series and MGS Flood) for estimating surface runoff and sizing stormwater control and treatment facilities. This guidance suggests how to represent various LID techniques within those models so that their benefit in reducing surface runoff can be estimated. The lower runoff estimates should translate into smaller stormwater treatment and flow control facilities. In certain cases, use of various techniques can result in the elimination of those facilities.

The flow control credits presented in this chapter were developed by an LID credit committee comprised of stormwater managers from various local jurisdictions, WSDOT, WSU and Ecology.

This section identifies seven categories of LID techniques. For each category, the guidance lists basic design criteria that Ecology considers necessary in order to justify use of the suggested runoff "credit" or "runoff model representation." More detailed design guidance is available in the Low Impact Development Technical Guidance Manual for Puget Sound (LID Manual), published by the Puget Sound Action Team and the Washington State University Cooperative Extension.

As Puget Sound gains more experience with and knowledge of LID techniques, the design criteria will evolve. Also, our ability to model their performance will change as our modeling techniques improve. Therefore, we anticipate this guidance will be updated periodically to reflect the new knowledge and modeling approaches. Meanwhile, we encourage all to use the guidance, and to give us feedback on its usefulness and accuracy. Comments can be sent to Ed O'Brien of the Washington State Department of Ecology at eobr461@ecy.wa.gov.

Note that the terminology for grass has changed in the WWHM. The term grass has been replaced with landscaped area.

7.1 Permeable Pavements

7.1.1 Credits

7.1.1.1 Porous Asphalt or Concrete

Description of Public Road or Public Parking lot	Model Surface as
1. Base material laid above surrounding grade:	
a) Without underlying perforated drain pipes to collect stormwater	Grass over underlying soil type (till or outwash)
b) With underlying perforated drain pipes for stormwater collection:	
at or below bottom of base layer	Impervious surface
elevated within the base course	Impervious surface
2. Base material laid partially or completely below surrounding grade:	
a) Without underlying perforated drain pipes	Option 1: Grass over underlying soil type Option 2: Impervious surface routed to an infiltrationbasin[1]
b) With underlying perforated drain pipes:	
at or below bottom of base layer	Impervious surface
elevated within the base course[2]	Model as impervious surface routed to an infiltration basin[1]

[1] See section 7.8 for detailed instructions concerning how to represent the base material below grade as an infiltration basin in the Western Washington Hydrology Model.

[2] If the perforated pipes function is to distribute runoff directly below the wearing surface, and the pipes are above the surrounding grade, follow the directions for 2a above.

Description of Private Facilities (driveways, parking lots, walks, patios)

1. Base material below grade without perforated drain pipes	50% grass on underlying underlying soil; 50% impervious
2. Base material below grade with underlying perforated drain pipes	Impervious surface

7.1.1.2 Grid/lattice systems (non-concrete) and Paving Blocks

Description of Public Road or Public Parking lot	Model Surface as
1. Base material laid above surrounding grade	
a) Without underlying perforated drain pipes	Grid/lattice systems: grass on underlying soil (till or outwash). Paving Blocks: 50% grass on underlying soil; 50% impervious.
b) With underlying perforated drain pipes	Impervious surface
2. Base material laid partially or completely below surrounding grade	
a) Without underlying perforated drain pipes	Option 1: Grid/lattice as grass on underlying soil. Paving blocks as 50% grass; 50% impervious. Option 2: Impervious surface routed to an infiltration basin.[1]
b) With underlying perforated drain pipes	
at or below bottom of base layer	Impervious surface
elevated within the base course[2]	Model as impervious surface routed to an infiltration basin.[1]

Description of Private Facilities (driveways, parking lots, walks, patios)

Base material laid partially or completely below surrounding grade

a) Without underlying perforated drain pipes	0% grass; 50% impervious
b) With underlying drain pipes	Impervious surface

7.1.2 Design Criteria for Permeable Pavements

Subgrade

- Compact the subgrade to the minimum necessary for structural stability. Use static dual wheel small mechanical rollers or plate vibration machines for compaction. Do not allow heavy compaction due to heavy equipment operation. The subgrade should not be subject to truck traffic.
- Use on soil types A through C.

Geotextile

- Use geotextile between the subgrade and base material/separation layer to keep soil out of base materials.
- The geotextile should pass water at a greater rate than the subgrade soils.

Separation or Bottom Filter Layer (recommended but optional)

- A layer of sand or crushed stone (0.5 inch or smaller) graded flat is recommended to promote infiltration across the surface, stabilize the base layer, protect underlying soil from compaction, and serve as a transition between the base course and the underlying geotextile material.

Base material

- Many design combinations are possible. The material must be free draining. For more detailed specifications for different types of permeable pavement, see section 6.2: Permeable Paving.
  - Driveways (recommendation):
    - ✓ > 4” layer of free-draining crushed rock, screened gravel, or washed sand.
    - ✓ < 5% fines (material passing thru #200 sieve) based on fraction passing #4 sieve.
  - Roads & Parking lots: The standard materials and quantities used for asphalt roads should be followed. For example:
    - ✓ Pierce Co. cites larger rock on bottom, smaller on top (e.g., 2” down to 5/8”); compacted; minimal fines; 8 inches total of asphaltic concrete and base material.
    - ✓ WSDOT lists coarse crushed stone aggregate (AASHTO Grading No. 57: 1.5 inch and lower); stabilized or unstabilized with modest compaction; meets fracture requirements.
    - ✓ FHWA suggests three layers between the porous pavement and geotextile. Typical layers would be:

Filter course: 13 mm diameter gravel, 25 to 50 mm thick.
Stone reservoir: 40-75 mm diameter stone.
Filter course: 13 mm diameter gravel, 50 mm thick.

Wearing layer

- For all surface types, a minimum initial infiltration rate of 10 inches per hour is necessary. To improve the probability of long-term performance, significantly higher infiltration rates are desirable.
- *Porous Asphalt:* Products must have adequate void spaces through which water can infiltrate. A void space within the range of 12 – 20% is common.
- *Porous Concrete:* Products must have adequate void spaces through which water can infiltrate. A void space within the range of 15 – 21% is common.
- *Grid/lattice systems filled with gravel, sand, or a soil of finer particles with or without grass:* The fill material must be at least a minimum of 2 inches of sand, gravel, or soil. It should be underlain with 6 inches or more of sand or gravel to provide an adequate base. The fill material should be at or slightly below the top elevation of the grid/lattice structure. Modular-grid openings must be at least 40% of the total surface area of the modular grid pavement. Provisions for removal of oil and grease contaminated soils should be included in the maintenance plan.
- *Paving blocks*: 6 inches of sand or aggregate materials should fill spaces between blocks and must be free draining. Do not use sand for the leveling layer or filling spaces with EcoStone.
- The block system should provide a minimum of 12% free draining surface area (area between the blocks).
- Provisions for removal of oil and grease contaminated soils should be included in the maintenance plan.

Drainage conveyance

Roads should still be designed with adequate drainage conveyance facilities as if the road surface was impermeable. Roads with base courses that extend below the surrounding grade should have a designed drainage flow path to safely move water away from the road prism and into the roadside drainage facilities. Use of perforated storm drains to collect and transport infiltrated water from under the road surface will result in less effective designs and less flow reduction credit.

Acceptance test

- Driveways can be tested by simply throwing a bucket of water on the surface. If anything other than a scant amount puddles or runs off the surface, additional testing is necessary prior to accepting the construction.
- Roads may be initially tested with the bucket test. In addition, test the initial infiltration with a 6-inch ring, sealed at the base to the road surface, or with a sprinkler infiltrometer. Wet the road surface continuously for 10 minutes. Begin test to determine compliance with 10 inches per hour minimum rate.

Limitations

- No run-on from pervious surfaces is preferred. If runoff comes from minor or incidental pervious areas, those areas must be fully stabilized.
- Slope impervious runoff away from the permeable pavement to the maximum extent practicable. Sheet flow from up-gradient impervious areas is not recommended, but permissible if porous surface flow path ≥ impervious surface flow path. (Note: Impermeable surface that drains to a permeable pavement can also be modeled as noted above as long as the flow path restriction is met.
- Do not use at "high-use" sites, auto commercial services (gas stations, mini-marts, commercial fueling stations, auto body and auto repair shops, auto wash), commercial truck parking areas, areas with heavy industrial activity (as defined by USEPA regulations), or areas with high pesticide use.
- Soils must not be tracked onto the wear layer or the base course during construction.
- Slopes:
  - Asphalt: Works best on level slopes and up to 2%. Do not use on slopes ≥ 5%.
  - Concrete: Maximum recommended slope of 6%.
  - Interlocking pavers: Maximum recommended slope of 10%.
  - Grid/lattice systems: Maximum generally in 5-6% range.
- Do not use in areas subject to heavy, routine sanding for traction during snow and ice accumulation.
- Comply with local building codes for separation distances from buildings and wells. Inquire with the local jurisdiction concerning applicable setbacks.

Maintenance

- Inspect project upon completion to correct accumulation of fine material. Conduct periodic visual inspections to determine if surfaces are clogged with vegetation or fine soils. Clogged surfaces should be corrected immediately.
- Surfaces should be swept with a high-efficiency or vacuum sweeper twice per year; preferably, once in the autumn after leaf fall, and again in early spring. As long as annual infiltration rate testing demonstrates that a rate of 10 inches per hour or greater is being maintained, the sweeping frequency can be reduced to once per year. For porous asphalt and concrete surfaces, high pressure hosing should follow sweeping once per year.

7.2 Dispersion

7.2.1 Full Dispersion for the Entire Development Site (fulfills treatment and flow control requirements)

Developments that preserve 65% of a site (or a threshold discharge area of a site) in a forested or native condition, can disperse runoff from the developed portion of the site into the native vegetation area as long as the developed areas draining to the native vegetation do not have impervious areas that exceed 10% of the entire site. Runoff must be dispersed into the native area in accordance with the BMPs cited in BMP T5.30 of Volume V - Chapter 5. Additional impervious areas are allowed, but should not drain to the native vegetation area and are subject to the thresholds, treatment and flow control requirements of this stormwater manual.

7.2.2 Full Dispersion for All or Part of the Development Site

Developments that maintain ratios of:

≥ 65% forested or native condition; and

≤ 10% effective impervious surface of the area draining into the native vegetation area may disperse runoff into the native area in accordance with the BMPs cited in BMP T5.30 of Volume V - Chapter 5. Examples of such ratios are:

% Native Vegetation Preserved (min. allowed)	% Effective Impervious (max. allowed)	% Lawn/Landscape (max. allowed)
65	10	35
60	9	40
55	8.5	45
50	8	50*
45	7	55*
40	6	60*
35	5.5	65*

* Where these lawn/landscape areas are established on till soils, and exceed 50% of the total site, they should be developed using guidelines in BMP T5.13 of Volume V – Chapter 5, or a locally approved alternative soil quality and depth specification.

Within the context of this dispersion option, the only impervious surfaces that are ineffective are those that are routed into an appropriately sized dry well or into an infiltration basin that meets the flow control standard and does not overflow into the forested or native vegetation area.

Note: For options in 7.2.1 and 7.2.2, native vegetation areas must be protected from future development. Protection must be provided through legal documents on record with the local government. Examples of adequate documentation include: a conservation easement, conservation parcel, deed restriction.

7.2.3 Partial Dispersion on residential lots and commercial buildings

If roof runoff is dispersed on single-family lots or commercial lots greater than 22,000 square feet, according to the design criteria and guidelines in BMP T5.10 of Volume V - Chapter 5, and the vegetative flow path is 50 feet or larger through undisturbed native landscape or lawn/landscape area that meets the guidelines in BMP T5.13, the roof area may be modeled as landscaped area. This is done by clicking on the "Credits" button in the WWHM and entering the percent of roof area that is being dispersed.

The vegetated flow path is measured from the downspout or dispersion system discharge point to the downstream property line, stream, wetland, or other impervious surface.

Where BMP T5.11 (concentrated flow dispersion) or BMP T5.12 (sheet flow dispersion) of Volume V – Chapter 5 is used to disperse runoff into a native vegetation area or an area that meets the guidelines in BMP T5.13 of Volume V – Chapter 5, the impervious area may be modeled as landscaped area. This can be done by entering the impervious area as landscaped area rather than entering it as impervious area.

7.2.4 Road Projects

1) Uncollected or natural dispersion into adjacent vegetated areas (i.e., sheet flow into the dispersion area).

Full dispersion credit (i.e. no other treatment or flow control required) for sites that meet the following criteria:

a) *Outwash soils* (Type A – sands and sandy gravels, possibly some Type B – loamy sands) that have an initial saturated infiltration rate of 4 inches per hour or greater. The infiltration rate must be based on one of the following: (1) A D_{10} size (10% passing the size listed) greater than 0.06 mm (based on the estimated infiltration rate indicated by the upper-bound line in Figure 3.28 of Volume III – Chapter 3 for the finest soil within a three foot depth; (2) field results using procedures (Pilot Infiltration Test) identified in Appendix V-B of Volume V.

- 20 feet of impervious flow path needs 10 feet of dispersion area width.
- Each additional foot of impervious flow path needs 0.25 feet of dispersion area width.

b) *Other soils:* (Types C and D and some Type B not meeting the criterion in 1a above)

- Dispersion area must have 6.5 feet of width for every 1 foot width of impervious area draining to it. A minimum distance of 100 feet is necessary.

c) *Criteria applicable to all soil types:*

- Depth to the average annual maximum groundwater elevation should be at least 3 feet.
- Impervious surface flow path must be $\leq$ 75 ft. Pervious flow path must be $\leq$ 150 ft. Pervious flow paths are up-gradient road side slopes that run onto the road and down-gradient road side slopes that precede the dispersion area.
- Lateral slope of impervious drainage area should be $\leq$ 8%. Road side slopes must be $\leq$ 25%. Road side slopes do not count as part of the dispersion area unless native vegetation is re-established and slopes are less than 15%. Road shoulders that are paved or graveled to withstand occasional vehicle loading count as impervious surface.
- Longitudinal slope of road should be $\leq$ 5%.
- Length of dispersion area should be equivalent to length of road.
- Average longitudinal (parallel to road) slope of dispersion area should be $\leq$ 15%.
- Average lateral slope of dispersion area should be $\leq$ 15%.

2) Channelized (collected and re-dispersed) stormwater into areas with (a) native vegetation or (b) cleared land in areas outside of Urban Growth Areas that do not have a natural or man-made drainage system.

Full dispersion credit (i.e., no other treatment or flow control required) is given to projects that meet the following criteria:

a) *Outwash soils* (Type A – sands and sandy gravels, possibly some Type B – loamy sands) that have an initial saturated infiltration rate of 4 inches per hour or greater. The infiltration rate must be based on one of the following: (1) A D_{10} size (10% passing the size listed) greater than 0.06 mm (based on the estimated infiltration rate indicated by the upper-bound line in Figure 3.28 of Volume III – Chapter 3 for the finest soil within a three foot depth; 2 field results using procedures (Pilot Infiltration Test) identified in Appendix V-B of Volume V.

- Dispersion area should be at least ½ of the impervious drainage area.

b) *Other soils:* (Types C and D and some Type B not meeting the criterion in 2a above)

- Dispersion area must have 6.5 feet of width for every 1 foot width of impervious area draining to it. A minimum distance of 100 feet is necessary.

c) *Other criteria applicable to all soil types*:

- Depth to the average annual maximum groundwater elevation should be at least three feet.
- Channelized flow must be redispersed to produce longest possible flow path.
- Flows must be evenly dispersed across the dispersion area.
- Flows must be dispersed using rock pads and dispersion techniques as specified in BMP T5.30, of Volume V – Chapter 5.
- Approved energy dissipation techniques may be used.
- Limited to onsite (associated with the road) flows.
- Length of dispersion area should be equivalent to length of the road.
- Average longitudinal and lateral slopes of the dispersion area should be $\leq$ 8%.

3) Engineered dispersion of stormwater runoff into an area with engineered soils

Full dispersion credit (i.e., no other treatment or flow control required) is given to projects that meet the following criteria:

- Stormwater can be dispersed via sheet flow or via collection and re-dispersion in accordance with the techniques specified in BMP T5.30 in Volume V – Chapter 5.
- Depth to the average annual maximum groundwater elevation should be at least three feet.
- Type C and D soils must be compost-amended following guidelines in BMP T5.13 of Volume V – Chapter 5. The guidance document *Guidelines and Resources for Implementing Soil Quality and Depth BMP T5.13 in WDOE Stormwater Management Manual for Western Washington* can be used, or an approved equivalent soil quality and depth specification approved by the Department of Ecology. The guidance document is available at http://www.soilsforsalmon.org.
    - Dispersion area must meet the 6.5 to 1 ratio for full dispersion credit.

- Type A and B soils that meet the 4 inches per hour initial saturated infiltration rate minimum (See Section 7.2.4.2.a above) must be compost amended in accordance with guidelines in BMP T5.13 of Volume V – Chapter 5. Compost may be incorporated into the soil in accordance with the guidance document cited above, or can be placed on top the native soil.
  - 20 feet of impervious flow path needs 10 feet of dispersion area width.
  - Each additional foot of impervious flow path needs 0.25 feet of dispersion area width.
- Average longitudinal (parallel to road) slope of dispersion area should be ≤ 15%.
- Average lateral slope of dispersion area should be ≤ 15%.
- The dispersion area should be planted with native trees and shrubs.
-

4) Other Characteristics for Dispersal areas

- Dispersal areas must be outside of the urban growth area; or if inside the urban growth area, in legally protected areas (easements, conservation tracts, public parks).
- If outside urban growth areas, legal agreements should be reached with property owners of dispersal areas subject to stormwater that has been collected and is being re-dispersed.
- An agreement with the property owner is advised for uncollected, natural dispersion via sheet flow that represents a continuation of past practice. If not a continuation of past practice, an agreement should be reached with the property owner.

7.3 Vegetated Roofs

7.3.1 Option 1 Design Criteria

- 3 inches to 8 inches of soil/growing media

Runoff Model Representation

- 50% till landscaped area; 50% impervious area

7.3.2 Option 2 Design Criteria

- ≥ 8 inches of soil/media

Runoff Model Representation

- 50% till pasture; 50% impervious area

Note: These modeling recommendations differ from those in the LID Manual.

7.3.3 Other Necessary Design Criteria

- Soil or growth media that has a high field capacity, and a saturated hydraulic conductivity that is ≥ 1 inch/hour (i.e., equivalent to a sandy loam or soil with a higher hydraulic conductivity).
- Drainage layer that allows free drainage under the soil/media.
- Vegetative cover that is both drought and wet tolerant.
- Waterproof membrane between the drain layer and the structural roof support.
- Maximum slope of 20%.

7.4 Rainwater Harvesting

7.4.1 Design Criteria

- 100% reuse of the annual average runoff volume (use continuous runoff model to get annual average for drainage area).
- System designs involving interior uses must have a monthly water balance that demonstrates adequate capacity for each month and reuse of all stored water annually.

Runoff Model Representation:

- Do not enter drainage area into the runoff model.

7.4.2 Other Criteria

- Restrict use to 4 homes/acre housing and lower densities when the captured water is solely for outdoor use.

7.5 Reverse Slope Sidewalks

Reverse slope sidewalks are sloped to drain away from the road and onto adjacent vegetated areas.

7.5.1 Design Criteria:

- $\geq$ 10 feet of vegetated surface downslope that is not directly connected into the storm drainage system.
- Vegetated area receiving flow from sidewalk must be native soil or meet guidelines in BMP T5.13 of Volume V – Chapter 5.

7.5.2 Runoff Model Representation:

- Enter sidewalk area as landscaped area over the underlying soil type.

7.6 Minimal Excavation Foundations

Low impact foundations are defined as those techniques that do not disturb, or minimally disturb the natural soil profile within the footprint of the structure. This preserves most of the hydrologic properties of the native soil. Pin foundations are an example of a minimal excavation foundation.

7.6.1 Runoff Model Representation

- Where residential roof runoff is dispersed on the up gradient side of a structure in accordance with the design criteria and guidelines in BMP T5.10 of Volume V – Chapter 5, the tributary roof area may be modeled as pasture on the native soil.
- Where "step forming" is used on a slope, the square footage of roof that can be modeled as pasture must be reduced to account for lost soils. In "step forming," the building area is terraced in cuts of limited depth. This results in a series of level plateaus on which to erect the form boards. The following equation (suggested by Rick Gagliano of Pin Foundations, Inc.) can be used to reduce the roof area that can be modeled as pasture.

$$A_1 - \frac{dC(.5)}{dP} \times A_1 = A_2$$

A_1 = roof area draining to up gradient side of structure

dC = depth of cuts into the soil profile

dP = permeable depth of soil (The A horizon plus an additional few inches of the B horizon where roots permeate into ample pore space of soil).

A_2 = roof area that can be modeled as pasture on the native soil

- If roof runoff is dispersed down gradient of the structure in accordance with the design criteria and guidelines in BMP T5.10 of Volume V – Chapter 5, AND there is at least 50 feet of vegetated flow path through native material or lawn/landscape area that meets the guidelines in BMP T5.13 of Volume V – Chapter 5, the tributary roof areas may be modeled as landscaped area.

7.6.2 Limitations

- To minimize soil compaction, heavy equipment cannot be used within or immediately surrounding the building. Terracing of the foundation area may be accomplished by tracked, blading equipment not exceeding 650 psf.

7.7 Bioretention areas (rain gardens)

The design criteria provided below outlines basic guidance on bioretention design specifications, procedures for determining infiltration rates, and flow control guidance. For details on design specifications see section 6.1: Bioretention Areas of the Low Impact Development Technical Guidance Manual for Puget Sound (LID Manual).

7.7.1 Design Criteria

Soils

- The soils surrounding bioretention facilities are a principle design element for determining infiltration capacity, sizing and rain garden type. The planting soil mix placed in the cell or swale is a highly permeable soil mixed thoroughly with compost amendment, and a surface mulch layer.
- Soil depth should be a minimum of 18 inches to provide acceptable minimum pollutant attenuation and good growing conditions for selected plants.
- The texture for the soil component of the bioretention soil mix should be a loamy sand (USDA Soil Textural Classification). Clay content for the final soil mix should be less than 5 percent. The final soil mix (including compost and soil) should have a minimum short-term hydraulic conductivity of 1.0 inches/hour per ASTM Designation D 2434 (Standard Test Method for Permeability of Granular Soils) at 80 percent compaction per ASTM Designation D 1557.
- The final soil mixture should have a minimum organic content of approximately 10 percent by dry weight.
- The pH for the soil mix should be between 5.5 and 7.0.

Mulch layer

- Bioretention areas can be designed with or without a mulch layer.

Compost

- Material must be in compliance with WAC chapter 173-350-220. This code is available online at http://www.ecy.wa.gov/programs/swfa/facilities/350.html.
- pH between 5.5 and 7.0.
- Carbon nitrogen ratio between 20:1 and 35:1 (35:1 CN ratio recommended for native plants)
- Organic matter content should be between 35% and 65%.

Installation

- Minimize compaction of the base and sidewalls of the bioretention area. Excavation should not be allowed during wet or saturated conditions. Excavation should be performed by machinery operating adjacent to the bioretention facility and no heavy equipment with narrow tracks, narrow tires or large lugged, high pressure tires should be allowed on the bottom of the bioretention facility.

- On-site soil mixing or placement should not be performed if soil is saturated. The bioretention soil mixture should be placed and graded by excavators and/or backhoes operating adjacent to the bioretention facility.

Plant materials

- Plants should be tolerant of ponding fluctuations and saturated soil conditions for the length of time anticipated by the facility design, and drought during the summer months.
- In general, the predominant plant material utilized in bioretention areas are facultative species adapted to stresses associated with wet and dry conditions.

Maximum ponding depth

- A maximum ponding depth of 12 inches is recommended.
- A maximum surface pool drawdown time of 24 hours is recommended.
- Ponding depth and system drawdown should be specified so that soils dry out periodically in order to:
  - Restore hydraulic capacity to receive flows from subsequent storms.
  - Maintain infiltration rates.
  - Maintain adequate soil oxygen levels for healthy soil biota and vegetation.
  - Provide proper soil conditions for biodegradation and retention of pollutants.

7.7.2 Limitations

- A minimum of 3 feet of clearance is necessary between the lowest elevation of the bioretention soil, or any underlying gravel layer, and the seasonal high groundwater elevation or other impermeable layer if the area tributary to the rain garden meets or exceeds any of the following limitations:
  - 5,000 square feet of pollution-generating impervious surface; or
  - 10,000 square feet of impervious area; or
  - ¾ acres of lawn and landscape.
- If the tributary area to an individual rain garden does not exceed the areal limitations above, a minimum of 1 foot of clearance is adequate between the lowest elevation of the bioretention soil (or any underlying gravel layer) and the seasonal high groundwater elevation or other impermeable layer.

7.7.3 Runoff Model Representation

Pothole design (bioretention cells)

The rain garden is represented as a pond with a steady-state infiltration rate. Proper infiltration rate selection is described below. The pond volume is a combination of the above ground volume available for water storage and the volume available for storage within the imported soil. The above ground volume is the size of the "pothole" that accommodates standing water. A minimum ponding depth of 6-inches is recommended. The soil storage volume is determined by multiplying the volume occupied by the imported soil by the soil's percent porosity. Use 40

percent porosity for bioretention planting mix soils recommended in section 6.1.2.3: Bioretention components of the LID Manual. That volume is presumed to be added directly below the surface soil profile of the rain garden. The theoretical pond dimensions are represented in the Pond Information/Design screen. The Effective Depth is the distance from the bottom of the theoretical pond to the height of the overflow. This depth is less than the actual depth because of the volume occupied by the soil. Approximate side slopes can be individually entered. On the Pond Information/Design screen, there is a button, which asks, "Use Wetted Surface Area?" Pushing that button is an affirmative response. Do not push the button if the rain garden has sidewalls steeper than 2 horizontal to 1 vertical.

Rain gardens with underlying perforated drain pipes that discharge to the surface can also be modeled as ponds with steady-state infiltration rates. However, the only volume available for storage (and modeled as storage as explained herein) is the void space within the imported material (usually sand or gravel) below the invert of the drain pipe.

<u>Linear Design: (bioretention swale or slopes)</u>

Swales

Where a swale design has a roadside slope and a back slope between which water can pond due to an elevated, and an overflow/drainage pipe at the lower end of the swale, the swale may be modeled as a pond with a steady state infiltration rate. This method does not apply to swales that are underlain by a drainage pipe.

If the long-term infiltration rate through the imported bioretention soil is lower than the infiltration rate of the underlying soil, the surface dimensions and slopes of the swale should be entered into the WWHM as the pond dimensions and slopes. The effective depth is the distance from the soil surface at the bottom of the swale to the invert of the overflow/drainage pipe. If the infiltration rate through the underlying soil is lower than the estimated long-term infiltration rate through the imported bioretention soil, the pond dimensions entered into the WWHM should be adjusted to account for the storage volume in the void space of the bioretention soil. Use 40 percent porosity for bioretention planting mix soils recommended in section 6.1.2.3: Bioretention components of the LID Manual. For instance, if the soil is 40% voids, and the depth of the imported soils is 2 feet throughout the swale, the depth of the pond is increased by 0.8 feet. If the depth of imported soils varies within the side slopes of the swale, the theoretical side slopes of the pond can be adjusted.

This procedure to estimate storage space should only be used on bioretention swales with a 1% slope or less. Swales with higher slopes should more accurately compute the storage volume in the swale below the drainage pipe invert.

Slopes

Where a bioretention design involves only a sloped surface such as the slope below the shoulder of an elevated road, the design can also be modeled as a pond with a steady state infiltration rate. This procedure only applies in instances where the infiltration rate through the underlying soil is less than the estimated long-term infiltration rate of the bioretention imported soil. In this case, the length of the bioretention slope should correspond to the maximum wetted cross-sectional

area of the theoretical pond. The effective depth of the theoretical pond is the void depth of the bioretention soil as estimated by multiplying the measured porosity times the depth of the bioretention soils. Use 40 percent porosity for bioretention planting mix soils recommended in section 6.1.2.3: Bioretention components of the LID Manual.

7.7.4 Infiltration Rate Determinations

The assumed infiltration rate for the pond must be the lower of the estimated long-term rate of the imported soil or the initial (a.k.a. short-term or measured) infiltration rate of the underlying soil profile. Using one of the procedures explained below, the initial infiltration rates of the two soils must be determined. Then after applying an appropriate correction factor to the imported soil of the rain garden, the designer can compare and determine the lower of the long-term infiltration rate of the imported soil, and the initial infiltration rate of the underlying native soil. The underlying native soil does not need a correction factor because the overlying imported soil protects it. Below are explanations for how to determine infiltration rates for the imported and underlying soils, and how to use them with the WWHM.

7.7.4.1 Imported Soil for the rain garden

1. Method for imported soil in a rain garden with a tributary area of or exceeding any of the following limitations: 5,000 square feet of pollution-generating impervious surface; or 10,000 square feet of impervious surface; or ¾ acres of lawn and landscape:
   - Use ASTM D 2434 Standard Test Method for Permeability of granular Soils (Constant Head) with a compaction rate of 80% using ASTM D1557 Test Method for Laboratory Compaction Characteristics of Soil Using Modified Effort.
   - Use **4** as the infiltration reduction correction factor.
   - Compare this rate to the infiltration rate of the underlying soil (as determined using one of the methods below). If the long-term infiltration rate of the imported soil is lower, enter that infiltration rate and the correction factor into the corresponding boxes on the pond information/design screen of the WWHM.

2. Method for imported soil in a rain garden with a tributary area less than 5,000 square feet of pollution-generating impervious surface; and less than 10,000 square feet of impervious surface; and less than ¾ acres of lawn and landscape:
   - Use ASTM D 2434 Standard Test Method for Permeability of granular Soils (Constant Head) with a compaction rate of 80% using ASTM D1557 Test Method for Laboratory Compaction Characteristics of Soil Using Modified Effort.
   - Use **2** as the infiltration reduction correction factor.
   - Compare this rate to the infiltration rate of the underlying soil (as determined using one of the methods below). If the long-term infiltration rate of the imported soil is lower, enter that infiltration rate and the correction factor into the corresponding boxes on the pond information/design screen of the WWHM.

7.7.4.2 Underlying Soil:

- Method 1: Use Table 3.7 of the 2004 SMMWW to determine the short-term infiltration rate of the underlying soil. Soils not listed in the table cannot use this approach. Compare this short-term rate to the long-term rate determined above for the bioretention imported soil. If

the short-term rate for the underlying soil is lower, enter it into the measured infiltration rate box on the pond information/design screen in the WWHM. Enter 1 as the infiltration reduction factor.

- Method 2: Determine the D_{10} size of the underlying soil. Use the "upperbound line" in Figure 3-26a of Volume III – Chapter 3 to determine the corresponding infiltration rate. If this infiltration rate is lower than the long-term infiltration rate determined for the imported bioretention soil, enter the rate for the underlying soil into the measured infiltration rate box on the pond/information design screen. Enter 1 as the infiltration reduction factor.
- Method 3: Measure the in situ infiltration rate of the underlying soil using procedures (Pilot Infiltration Test) identified in Appendix V-B of Volume V. If this rate is lower than the long-term infiltration rate determined for the imported bioretention soil, enter the underlying soil infiltration rate into the corresponding box on the pond information/design screen of the WWHM. Enter 1 as the infiltration reduction factor.

7.7.5 WWHM Routing and Runoff File Evaluation

In WWHM2, all infiltrating facilities must have an overflow riser to model overflows that occur should the available storage be exceeded. So in the Riser/Weir screen, for the Riser head enter a value slightly smaller than the effective depth of the pond (say 0.1 ft below the Effective Depth); and for the Riser diameter enter a large number (say 10,000 inches) to ensure that there is ample capacity for overflows.

Within the model, route the runoff into the pond by grabbing the pond icon and placing it below the tributary "basin" area. Be sure to include the surface area of the bioretention area in the tributary "basin" area. Run the model to produce the effluent runoff file from the theoretical pond. For projects subject to the flow control standard, compare the flow duration graph of that runoff file to the target pre-developed runoff file for compliance with the flow duration standard. If the standard is not achieved a downstream retention or detention facility must be sized (using the WWHM standard procedures) and located in the field. A conveyance system should be designed to route all overflows from the bioretention areas to centralized treatment facilities, and to flow control facilities if flow control applies to the project.

7.7.6 Modeling of Multiple Rain Gardens

Where multiple rain gardens are scattered throughout a development, it may be possible to represent those as one rain garden (a "pond" in the WWHM) serving the cumulative area tributary to those rain gardens. For this to be a reasonable representation, the design of each rain garden should be similar (e.g., same depth of soil, same depth of surface ponded water, roughly the same ratio of impervious area to rain garden volume).

7.7.7 Other Rain Garden Designs

Guidance for modeling other bioretention designs is not yet available. Where compost-amended soils are used along roadsides, Section 7.2: Dispersion, can be applied.

7.8 WWHM Instructions for Estimating Runoff Losses in Road Base Material Volumes that are Below Surrounding Grade

Introduction

This section applies to roads or parking lots that have been constructed with a permeable pavement and whose underlying base materials extend below the surrounding grade of land. The over-excavated volume can temporarily store water before it infiltrates or overflows to the surrounding ground surface. This section describes design criteria and modeling approaches for such designs.

Pre-requisite

Before using this guidance to estimate infiltration losses, the designer should have sufficient information to know whether adequate depth to a seasonal high groundwater table, or other infiltration barrier (such as bedrock) is available. The minimum depth necessary is 3 feet as measured from the bottom of the base materials.

7.8.1 Instructions for Roads on Zero to 2% Grade

For road projects whose base materials extend below the surrounding grade, a portion of the below grade volume of base materials may be modeled in the WWHM as a pond with a set infiltration rate.

First, place a "basin" icon in the "Schematic" grid on the left side of the "Scenario Editor" screen. Left clicking on the basin icon will create a "basin information" screen on the right in which you enter the appropriate pre-developed and post-developed descriptions of your project site (or threshold discharge area of the project site). By placing a pond icon below the basin icon in the Schematic grid, we are routing the runoff from the road and any other tributary area into the below grade volume that is represented by the pond.

The dimensions of the infiltration basin/pond to be entered in the Pond Information/Design screen are: the length of the base materials that are below grade (parallel to the road); the width of the below grade material volume; and the Effective Depth. Note that the storage/void volume of the below grade base has to be estimated to account for the percent porosity of the gravel. This can be done by multiplying the below grade depth of base materials by the fractional porosity (e.g., a project with a gravel base of 32% porosity would multiply the below grade base material depth by 0.32). This is the Effective Depth. If the below grade base course has perforated drainage pipes elevated above the bottom of the base course, but below the elevation of the surrounding ground surface, the Effective Depth is the distance from the invert of the lowest pipe to the bottom of the base course multiplied by the fractional porosity.

Also in WWHM2, all infiltrating facilities must have an overflow riser to model overflows that occur should the available storage get exceeded. So in the Riser/Weir screen, for the Riser head enter a value slightly smaller than the effective depth of the base materials (say 0.1 ft below the Effective Depth); and for the Riser diameter enter a large value (say 10,000 inches) to ensure that there is ample capacity should overflows from the trench occur.

On the Pond Information/Design screen, there is a button that asks, "Use Wetted Surface Area?" Pushing that button is an affirmative response. Do not push the button.

Using the procedures explained in Volume III - Chapter 3 and Appendix V-B of the 2004 SMMWW, estimate the long-term infiltration rate of the native soils beneath the base materials. If using Method 1 from Chapter 3 of Volume III, enter the appropriate "short-term infiltration rate" from Table 3.7 into the "measured infiltration rate" box on the "Pond Information Design" screen of WWHM. Enter the correction factor from that table as the "Infiltration Reduction Factor." If using Method 2, enter the appropriate long-term infiltration rate from Table 3.8 into the "measured infiltration rate" box. Enter "1" as the correction factor. Note that Table 3.8 is restricted to the soil types in the table. For soils with a D_{10} size smaller than .05 mm, use the "lowerbound" values from Figure 3-26a in Volume III – Chapter 3. If using Method 3, enter the measured in-situ infiltration rate as the "Measured Infiltration Rate" in the Pond Information/Design Screen. Also enter the appropriate cumulative correction factor determined from Table 3.9 as the "Infiltration Reduction Factor." Wherever practicable, Ecology recommends using Method 3, in-situ infiltration measurements (Pilot Infiltration Test) in accordance with Appendix V-B of Volume V – Chapter 5.

Run the model to produce the overflow runoff file from the base materials infiltration basin. Compare the flow duration graph of that runoff file to the target pre-developed runoff file for compliance with the flow duration standard. If the standard is not achieved a downstream retention or detention facility must be sized (using the WWHM standard procedures) and located in the field. The road base materials should be designed to direct any water that does not infiltrate into a conveyance system that leads to the retention or detention facility.

7.8.2 Instructions for Roads on Grades above 2%

Road base material volumes that are below the surrounding grade and that are on a slope can be modeled as a pond with an infiltration rate and a nominal depth. Represent the below grade volume as a pond. Grab the pond icon and place it below the "basin" icon so that the computer model routes all of the runoff into the infiltration basin/pond

The dimensions of the infiltration basin/pond to be entered in the Pond Information/Design screen are: the length (parallel to and beneath the road) of the base materials that are below grade; the width of the below grade base materials; and an Effective Depth of 1 inch. In WWHM2, all infiltrating facilities must have an overflow riser to model overflows that occur should the available storage get exceeded. So in the Riser/Weir screen, enter 0.04 ft (½ inch) for the Riser head and a large Riser diameter (say 1000 inches) to ensure that there is no head build up.

Note: If a drainage pipe is embedded and elevated in the below grade base materials, the pipe should only have perforations on the lower half (below the spring line) or near the invert. Pipe volume and trench volume above the pipe invert cannot be assumed as available storage space.

Estimate the infiltration rate of the native soils beneath the base materials. See the previous section (Instructions for Roads on Zero to 2% Grade) for estimating options and for how to enter

infiltration rates and infiltration reduction factors into the "Pond Information/ Design" Screen of WWHM. Enter the appropriate information for the theoretical pond of ½-inch maximum depth.

On the Pond Information/Design screen, there is a button that asks, "Use Wetted Surface Area?" Pushing that button is an affirmative response. Do not push the button.

Run the model to produce the effluent runoff file from the base materials. Compare the flow duration graph of that runoff file to the target pre-developed runoff file for compliance with the flow duration standard. If the standard is not achieved a downstream retention or detention facility must be sized (using the WWHM standard procedures) and located in the field. The road base materials should be designed to direct any water that does not infiltrate into a conveyance system that leads to the retention or detention facility.

7.8.3 Instructions for Roads on a Slope with Internal Dams within the Base Materials that are Below Grade

In this option, a series of infiltration basins is created by placing relatively impermeable barriers across the below grade base materials at intervals. The barriers inhibit the free flow of water down the grade of the base materials. The barriers must not extend to the elevation of the surrounding ground. Provide a space sufficient to pass water from upgradient to lower gradient basins without causing flows to surface out the sides of the base materials that are above grade.

Each stretch of trench (cell) that is separated by barriers can be modeled as an infiltration basin. This is done by placing pond icons in series in the WWHM. For each cell, determine the average depth of water within the cell (Average Cell Depth) at which the barrier at the lower end will be overtopped.

Specify the dimensions of each cell of the below-grade base materials in WWHM on the screen, which asks for pond dimensions. The dimensions of the infiltration cell to be entered in the Pond Information/Design screen are: the length of the cell (parallel to the road); the width; and the Effective Depth (In this case, it is OK to use the total depth of the base materials that are below grade).

Also in WWHM2, all infiltrating facilities must have an overflow riser to model overflows that occur should the available storage get exceeded. For each trench cell, the available storage is the void space within the Average Cell Depth. So, the storage/void volume of the trench cell has to be estimated to account for the percent porosity of the base materials. For instance, if the base materials have a porosity of 32%, the void volume can be represented by reducing the Average Cell Depth by 68% (1-32%). This depth is entered in the Riser/Weir screen as the Riser head. The gross adjustment works because WWHM2 (as March 2004) does not adjust infiltration rate as a function of water head. If the model is amended such that the infiltration rate becomes a function of water head, this gross adjustment will introduce error and therefore other adjustments should be made.) For the ***Riser diameter*** in the Riser/Weir screen,, enter a large number (say 10,000 inches) to ensure that there is ample capacity should overflows from the below-grade trench occur.

Each cell should have its own tributary drainage area that includes the road above it, any project site pervious areas whose runoff drains onto and through the road, and any offsite areas. Each drainage area is represented with a "basin" icon.

Up to four pond icons can be placed in a series to represent the below grade trench of base materials. The computer graphic representation of this appears as follows:

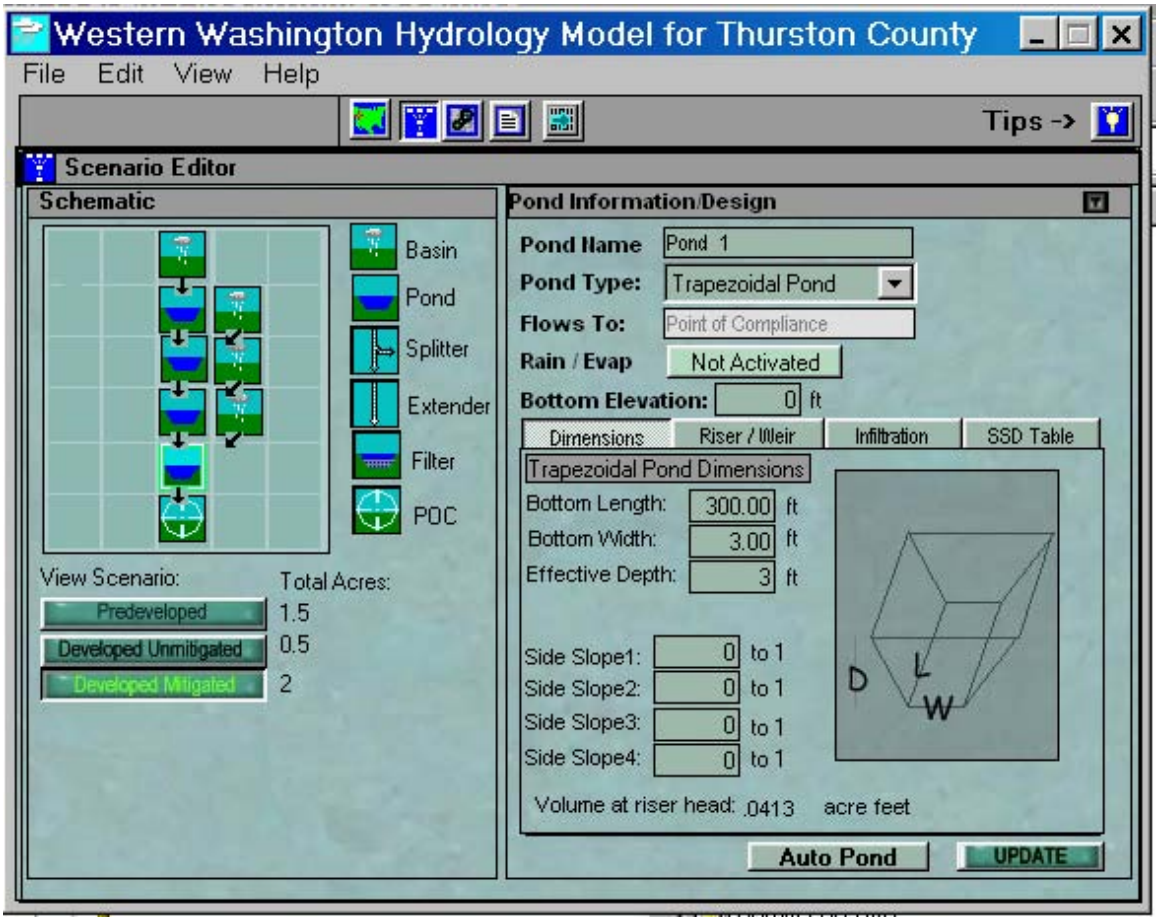

It is possible to represent a series of cells as one infiltration basin (using a single pond icon) if the cells all have similar length and width dimensions, slope, and Average Cell Depth. A single "basin" icon is also used to represent all of the drainage area into the series of cells.

On the Pond Information/Design screen (see screen below), there is a button, which asks, “Use Wetted Surface Area?” Pushing that button is an affirmative response. Do not push the button if the below-grade base material trench has sidewalls steeper than 2 horizontal to 1 vertical.

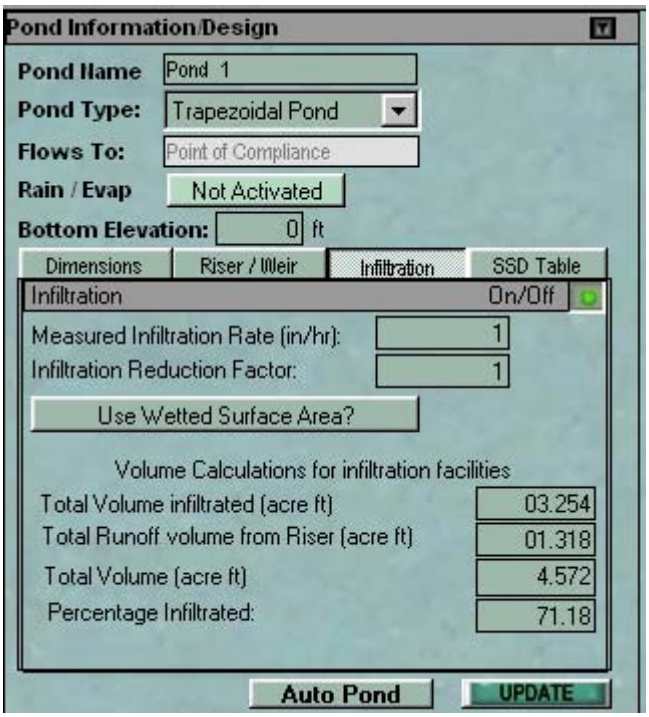

Using the procedures explained above for roads on zero grade, estimate the infiltration rate of the native soils beneath the trench. Also as explained above, enter the appropriate values into the “Measured Infiltration Rate” and “Infiltration Reduction Factor” boxes of the “Pond Information/Design” screen.

Run the model to produce the effluent runoff file from the below grade trench of base materials. Compare the flow duration graph of that runoff file to the target pre-developed runoff file for compliance with the flow duration standard. If the standard is not achieved a downstream retention or detention facility must be sized (using the WWHM standard procedures) and located in the field. The road base materials should be designed to direct any water that does not infiltrate into a conveyance system that leads to the retention or detention facility.

Appendix III-D
Procedure for Conducting a Pilot Infiltration Test

The Pilot Infiltration Test (PIT) consists of a relatively large-scale infiltration test to better approximate infiltration rates for design of stormwater infiltration facilities. The PIT reduces some of the scale errors associated with relatively small-scale double ring infiltrometer or "stove-pipe" infiltration tests. It is not a standard test but rather a practical field procedure recommended by Ecology's Technical Advisory Committee.

Infiltration Test

- Excavate the test pit to the depth of the bottom of the proposed infiltration facility. Lay back the slopes sufficiently to avoid caving and erosion during the test.
- The horizontal surface area of the bottom of the test pit should be approximately 100 square feet. For small drainages and where water availability is a problem smaller areas may be considered as determined by the site professional.
- Accurately document the size and geometry of the test pit.
- Install a vertical measuring rod (minimum 5-ft. long) marked in half-inch increments in the center of the pit bottom.
- Use a rigid 6-inch diameter pipe with a splash plate on the bottom to convey water to the pit and reduce side-wall erosion or excessive disturbance of the pond bottom. Excessive erosion and bottom disturbance will result in clogging of the infiltration receptor and yield lower than actual infiltration rates.
- Add water to the pit at a rate that will maintain a water level between 3 and 4 feet above the bottom of the pit. A rotameter can be used to measure the flow rate into the pit.

Note: *A water level of 3 to 4 feet provides for easier measurement and flow stabilization control. However, the depth should not exceed the proposed maximum depth of water expected in the completed facility.*

Every 15-30 min, record the cumulative volume and instantaneous flow rate in gallons per minute necessary to maintain the water level at the same point (between 3 and 4 feet) on the measuring rod.

Add water to the pit until one hour after the flow rate into the pit has stabilized (constant flow rate) while maintaining the same pond water level. (usually 17 hours)

After the flow rate has stabilized, turn off the water and record the rate of infiltration in inches per hour from the measuring rod data, until the pit is empty.

Data Analysis

Calculate and record the infiltration rate in inches per hour in 30 minutes or one-hour increments until one hour after the flow has stabilized.

Note: Use statistical/trend analysis to obtain the hourly flow rate when the flow stabilizes. This would be the lowest hourly flow rate.

Apply appropriate correction factors for site heterogeneity, anticipated level of maintenance and treatment to determine the site-specific design infiltration rate (see Table 7.3).

Example

The area of the bottom of the test pit is 8.5-ft. by 11.5-ft.

Water flow rate was measured and recorded at intervals ranging from 15 to 30 minutes throughout the test. Between 400 minutes and 1,000 minutes the flow rate stabilized between 10 and 12.5 gallons per minute or 600 to 750 gallons per hour, or an average of (9.8 + 12.3) / 2 = 11.1 inches per hour.

Applying a correction factor of 5.5 for gravelly sand in table 6.3 the design long-term infiltration rate becomes 2 inches per hour, anticipating adequate maintenance and pre-treatment.