Publication No. 76-e20
WA-32-1060

May 14, 1976

To: Bill Burwell

From: Douglas Houck

Subject: Walla Walla STP
Class II Inspection

On January 28, 1976 Mike Morhous and I arrived at the Walla Walla sewage treatment plant to conduct our part of the Class II inspection.

We installed a composite sampler after the barminutor and before and after chlorination. Each composite sampler was adjusted to take a 250 ml sample every 30 minutes. The sampler installed just before chlorination did not operate correctly which resulted in our not being able to collect the composite sample. Grab samples were taken for fecal coliforms and taken to Spokane for analysis.

The plant's flow is measured by two Sparling flow meters. One flow meter is located before the large older trickling filter and one before the two newer trickling filters. The treatment plant can also measure the flow from the Veteran's Hospital and its industrial sewage with separate Parshall flumes. While the flow recorded from the two Sparling flow meters includes the flow from the Veteran's Hospital it does not include the industrial sewage from the cannery.

The plant at the time of the survey was experiencing rising sludge at the beginning of the primary clarifier. They were correcting the problem by blowing compressed air to the bottom of the clarifier. This problem was occurring only during the winter months.

A thorough review was made of their laboratory procedure with Leonard Gage. A procedure which could cause problems is that they do not write down on the lab sheet who did the analysis. Two persons are doing the lab work and in reviewing their records each person was getting significantly different results. Leonard Gage's laboratory procedures were good. This does not necessarily mean that Al Poudy's techniques are wrong. While DOE's composited samples were not split with the treatment plant the BOD_5s and TSS values that Gage had gotten the week of the survey were very similar. The reason the composite samples were not split was due to a misunderstanding on my part. The following table gives Gage's reported values along with DOE's results and the NPDES monthly average limitations.

	DOE		Walla Walla		NPDES
	Inf	Eff	Inf.	Eff.	Monthly Avg.
BOD_5 (mg/l)	78	13	77	14	12
TSS (mg/l)	96	17	110	18	16
Fecal Coliforms (colonies/100 ml)		7		20	200

The above values show that the effluent was just slightly above the monthly average NPDES limits. One reason for this could be the cannery waste. Due to the unusual arrangement of the plant this waste bypasses most of the plant's treatment steps. The sewage flow from the cannery is mixed with the flow coming from the two newer trickling filters and pumped onto the standard rate trickling filter. Leonard Gage reported that this causes a large grease problem in the wet well of their pumping station and tends to clog the sprinkler heads in the standard rate trickling filter.

DH:ee

STP Survey Report Form

Efficiency Study

City Walla Walla Plant Type 2nd T.F. Pop. Served 26,000 Design Capacity 15 MGD

Receiving Water Mill Creek Perennial ____ Intermittent X

Date 1-27/28-76 Survey Period 24 hr. Survey Personnel Houck

Comp. Sampling Frequency 30 min. Sampling Alequot 250

Weather Conditions (24 hr) Sunny, clear - 50° Are facilities provided for complete by-pass of raw sewage? X Yes ____ No/Frequency of bypass None - once

Reason for bypass ____ (new line) Is bypass chlorinated? ____ Yes X No

Was DOE Notified? ____ Discharge - Intermittent ____ Continuous ____

Plant Operation

Total flow ____ How measured Sparling

Maximum flow 3.5 MGD 6.0 MGD Time of Max. 0800 0900 120 -

Minimum flow 2.0 MGD 5.0 Time of Min. @ 9500

Pre Cl_2 No #/day Post Cl_2 150 #/day

Field Results

Determinations	Influent Max.	Influent Min.	Influent Mean	Influent Median	Effluent Max.	Effluent Min.	Effluent Mean	Effluent Median
Temp °C				15.8				11.1
pH (Units)								
Conductivity (μmhos/cm²)								
Settleable Solids (mls/l)								

Laboratory Results on Composites

	Influent	Effluent	% Reduction
Laboratory No.	76-358	-359	
5-Day BOD ppm	78	13	83.3%
COD ppm	130	49	62.3%
T.S. ppm	295	234	20.7%
T.N.V.S. ppm	160	145	9.4%
T.S.S. ppm	96	17	82.3%
N.V.S.S. ppm	15	3	80.0%
pH (Units)	7.0	6.9	
Conductivity (μmhos/cm²)			
Turbidity (JTU's)			

Laboratory Bacteriological Results

Lab No.	Sampling Time	Colonies/100 ml (MF) Total Coliform	Fecal Coliform	Fecal Strep	Cl_2 Residual

Additional Laboratory Results

NO_3-N ppm -	0.71	
NO_2-N ppm -	ND	
NH_3-N ppm -	1.5	
T. Kjeldahl-N ppm -		
O-PO_4-P ppm -	3.0	
T-PO_4-P ppm -	4.6	

Operator's Name Leonard Gage Phone No. 529-2592

Furnish a flow diagram with sequence and relative size and points of chlorination.

Type of Collection System

__ Combined __ Separate X Both

Estimate flow contributed by surface or ground water (infiltration)

1 MGD

Plant Loading Information

Annual average daily flow rate (mgd)

Dry 6.7

Wet 8.0

Peak flow rate (mgd)

Dry 7

Wet 14

COMMENTS:

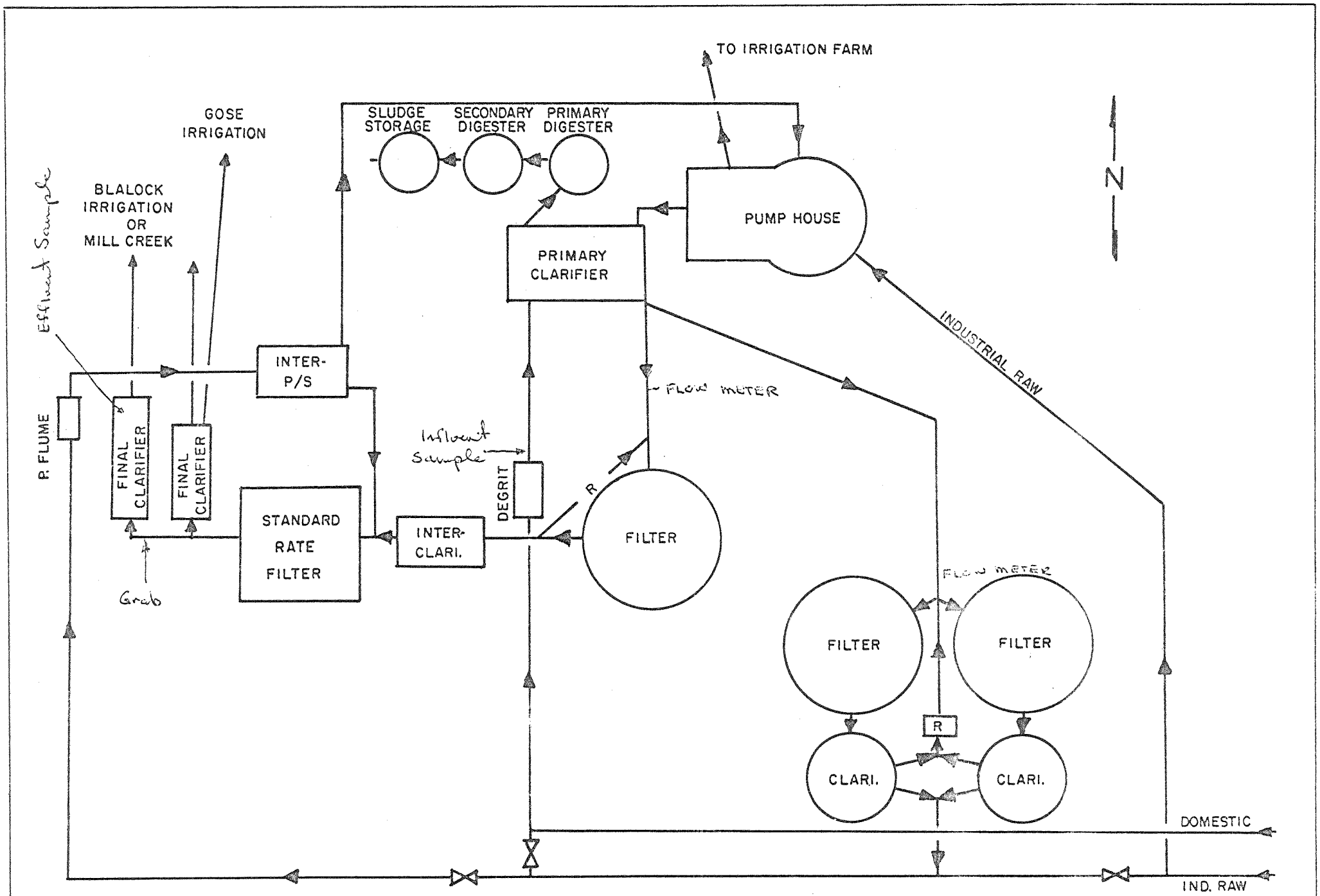

FLOW DIAGRAM - WALLA WALLA SEWAGE TREATMENT PLANT

STATE OF WASHINGTON

DEPARTMENT OF ECOLOGY

ORIGINAL TO: DH

COPIES TO:

LAB FILES

OLYMPIA LABORATORY

DATA SUMMARY

Source WALLA WALLA STP

Collected By D. HOVCK

Date Collected 1-28/29-76

Log Number:	76-358	59	60	61						
Station:	INF	Cl_2 EFF	H_2SO_4 EFF	EFF						
pH	7.0	6.9								
Turbidity (NTU)										
Sp. Conductivity (umhos/cm)										
COD	130.	49.								
BOD (5 day)	78	13								
Total Coliform (Col./100ml)										
Fecal Coliform (Col./100ml)										
NO3-N (Filtered)		0.71	0.72	0.71						
NO2-N (Filtered)		ND	ND	0.1						
NH3-N (Unfiltered)		1.5	0.70	0.67						
T. Kjeldahl-N (Unfiltered)										
O-PO4-P (Filtered)		3.0	2.6	2.4						
Total Phos.-P (Unfiltered)		4.6	3.1	2.8						
Total Solids	295	234								
Total Non. Vol. Solids	160	145								
Total Suspended Solids	96	17								
Total Sus. Non Vol. Solids	15	3								

Note: All results are in PPM (mg/L) unless otherwise specified. ND is "None Detected"
"<" is "Less Than" and ">" is "Greater Than"

ECY 040-2-32

Summary By Stephen D. Robb

Date 2-4-76